DocuSign Envelope ID: 55B72CA4-E932-41A3-93A1-8786D1C3F684

Construction Details – Foundations

Reinforcing Steel Bars

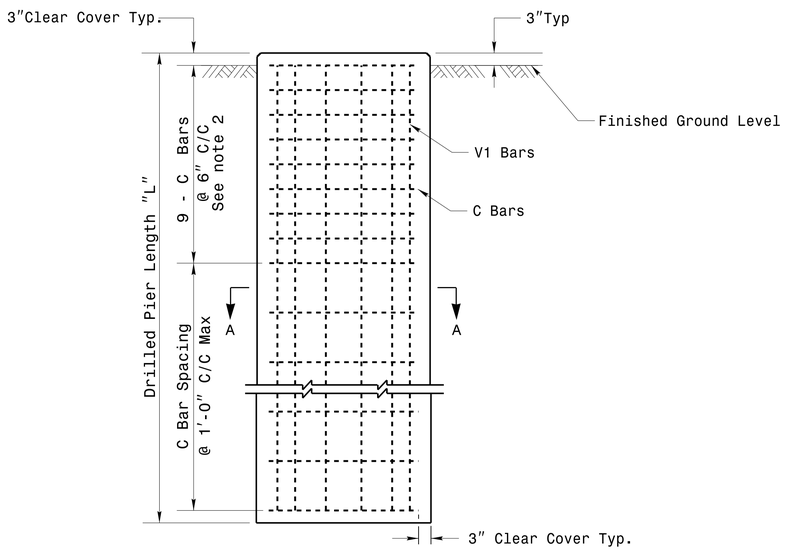

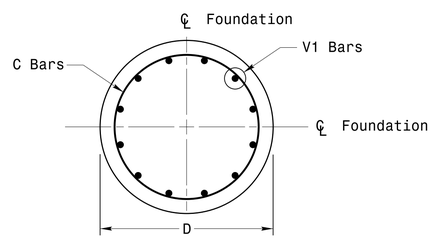

Section A-A

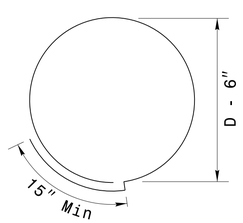

Typical "C" Bars

REINFORCING STEEL TABLE FOR STANDARD DRILL PIER SHAFT (4'–0" DIAMETER)						
Shaft Dia (in.)	Conc. Volume (cu. yds.)	Bar Name	MIN.	Size	Type	Length
48"	.465 x L	V1	***	#8	STR.	**
		C	*	#4	CIR.	12'-6"

* See Note No. 1
** See Note No. 3
*** See Note No. 4

Typical Foundation Anchor Bolt Details

(Reinforcing Cage Not Shown for Clarity)

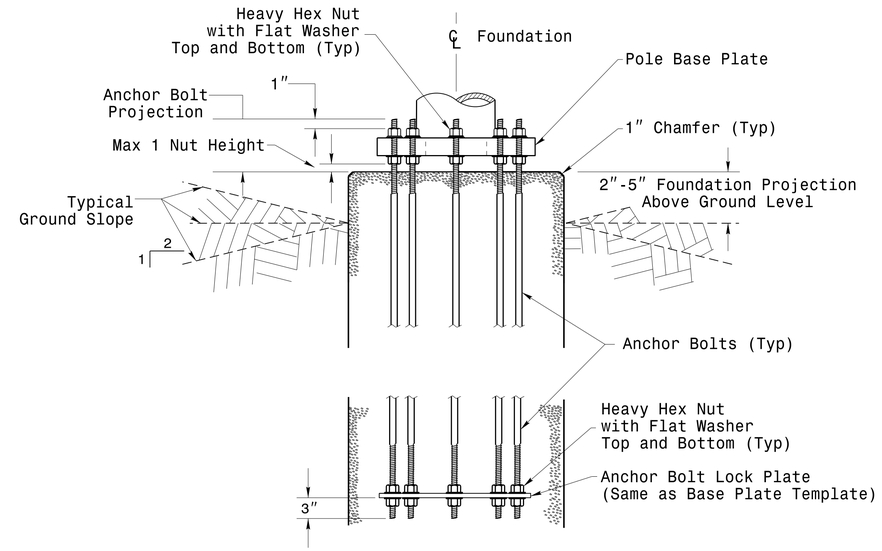

Typical Foundation Conduit Details

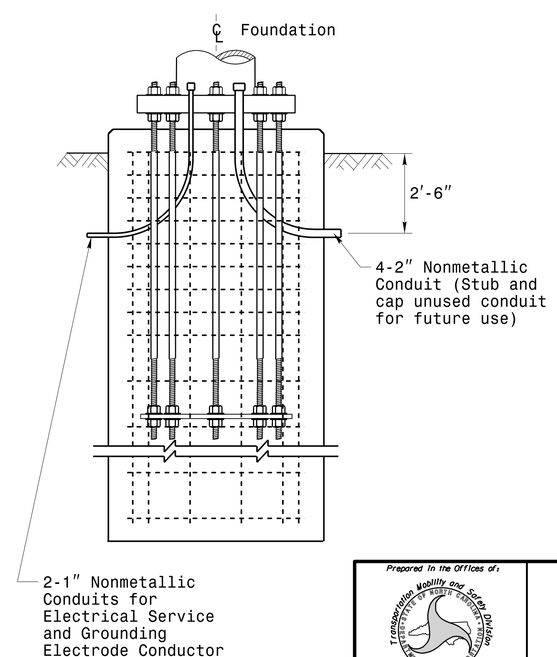

Notes

1. The number of C-bars is based on foundation depth and/or as required. For standard foundations, see sheets M 8 and M 9 for details.
2. Circular tie reinforcing rings may be vertically adjusted by +/- 3" at a depth between 2'-0" and 3'-0" to facilitate the installation of electrical conduit entering in the cage.
3. The length of V1-bars is based on foundation depth. For standard foundations, see sheets M 8 and M 9 for details. Vertical reinforcing bars (V1) may be horizontally adjusted by +/-3"to facilitate the installation of electrical conduit entering into the cage.
4. Provide vertical reinforcement as required per design. See sheets M 8 and M9 for details.

Prepared in the Offices of:
Transportation Mobility and Safety Division
STATE OF NORTH CAROLINA DEPARTMENT OF TRANSPORTATION
Signal Design Section
750 N.Greenfield Pkwy,Garner,NC 27529

SCALE
0 NA
NONE

Construction Details
Foundations

PLAN DATE:	AUGUST 2013	DESIGNED BY:	K.C. DURIGON
PREPARED BY:	N. BITTING	REVIEWED BY:	D.C. SARKAR

REVISIONS	INIT.	DATE

SEAL
NORTH CAROLINA PROFESSIONAL SEAL 028094 ENGINEER DEBESH C. SARKAR
DocuSigned by: Debesh C. Sarkar
44E8E32E1473E4C4
SIGNATURE 3/11/2014 DATE
SIG. INVENTORY NO.

02-MAR-2014 13:27
S:\TITLES\MITS\Signals\Signal Design Section\Eastern Region\MM Sheets\2012_M7_Con Details Foundations.dgn
jgallaway