DocuSign Envelope ID: 55B72CA4-E932-41A3-93A1-8786D1C3F684

Fabrication Details – Mast Arm Poles

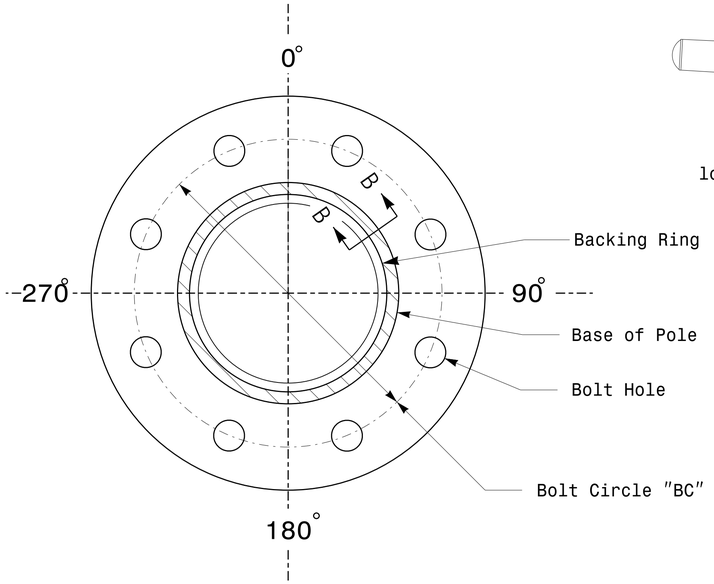

Section A-A
(See drawing M 2)

Pole Base Plate

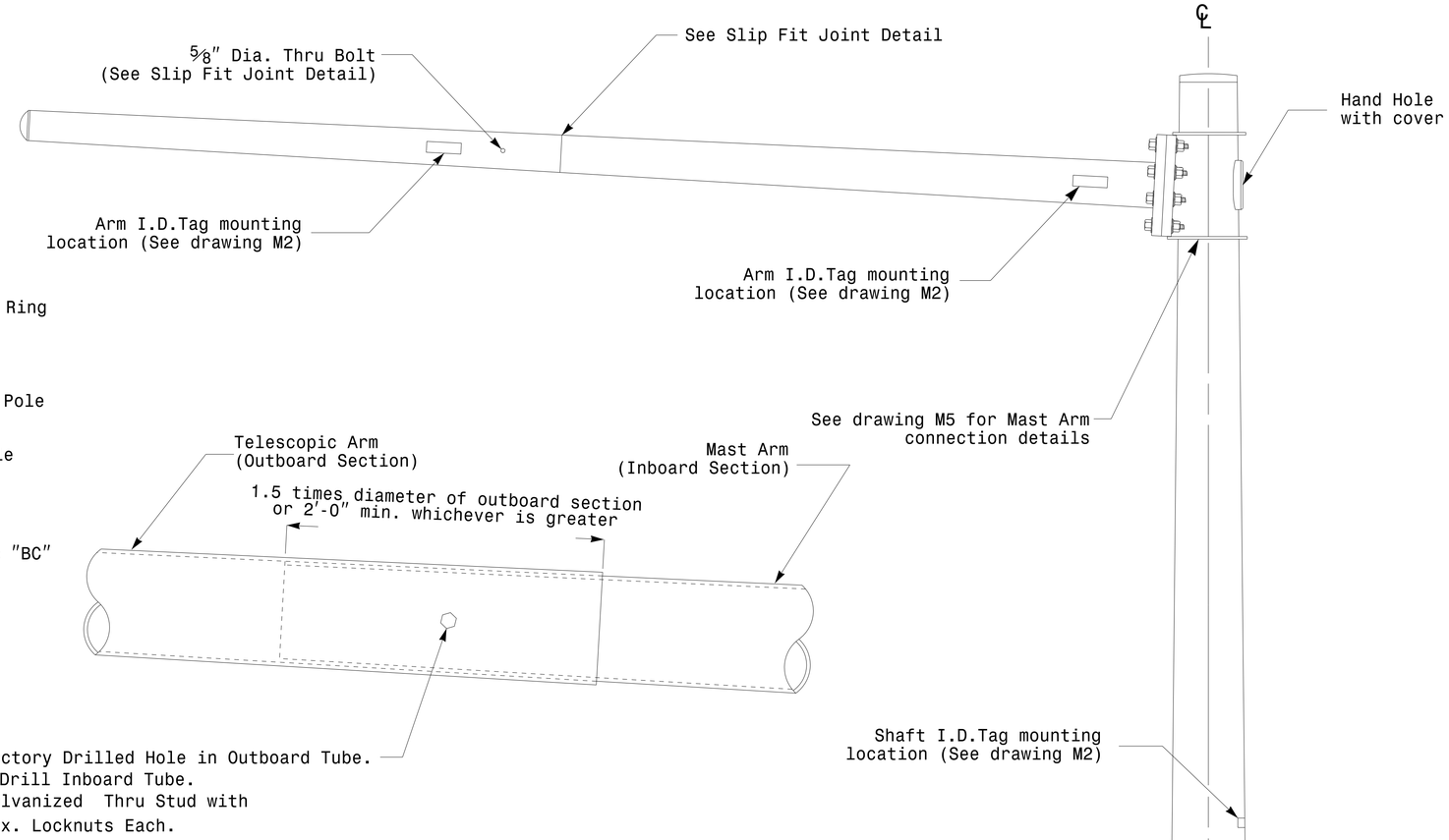

Slip Fit Joint Detail for Mast Arm

Monotube Mast Arm Pole
(.14in./ft. taper)

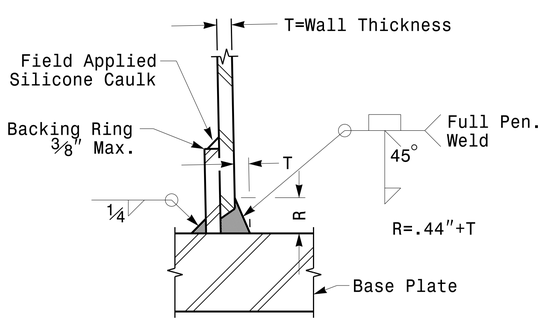

Section B-B
(Pole Attachment to Base Plate)

Full-Penetration Groove Weld Detail

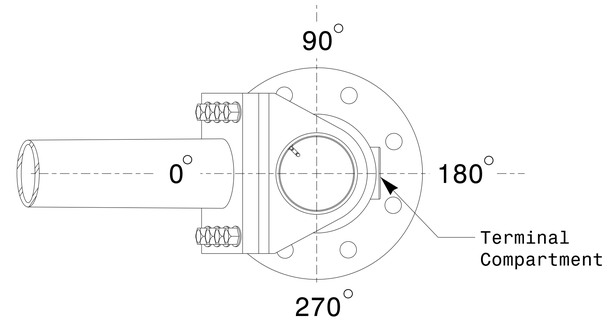

Mast Arm Radial Orientation

Prepared in the Offices of:
Transportation Mobility and Safety Division
Signal Design Section
750 N.Greenfield Pkwy.Garner,NC 27529

SCALE
0 NA
NONE

Typical Fabrication Details
for Mast Arm Poles

PLAN DATE:	AUGUST 2013	DESIGNED BY:	C.F. ANDREWS
PREPARED BY:	N. BITTING	REVIEWED BY:	D.C. SARKAR

REVISIONS	INIT.	DATE

SEAL
NORTH CAROLINA PROFESSIONAL SEAL 028094 ENGINEER DEBESH C. SARKAR
DocuSigned by: Debesh C. Sarkar
44E8E32E147E4C4...
3/11/2014
SIGNATURE DATE
SIG. INVENTORY NO.

04-MAR-2014 13:02
S:\MTS\SIGNALS\Signals\Signal Design Section\Eastern Region\M Sheets\2012_M4_Fab Details Mastarms.dgn
jgallaway