PROJECT REFERENCE NO.	SHEET NO.
R-0623	Sig. 5.1

EDI MODEL 2018ECL-NC CONFLICT MONITOR PROGRAMMING DETAIL

(remove jumpers and set switches as shown)

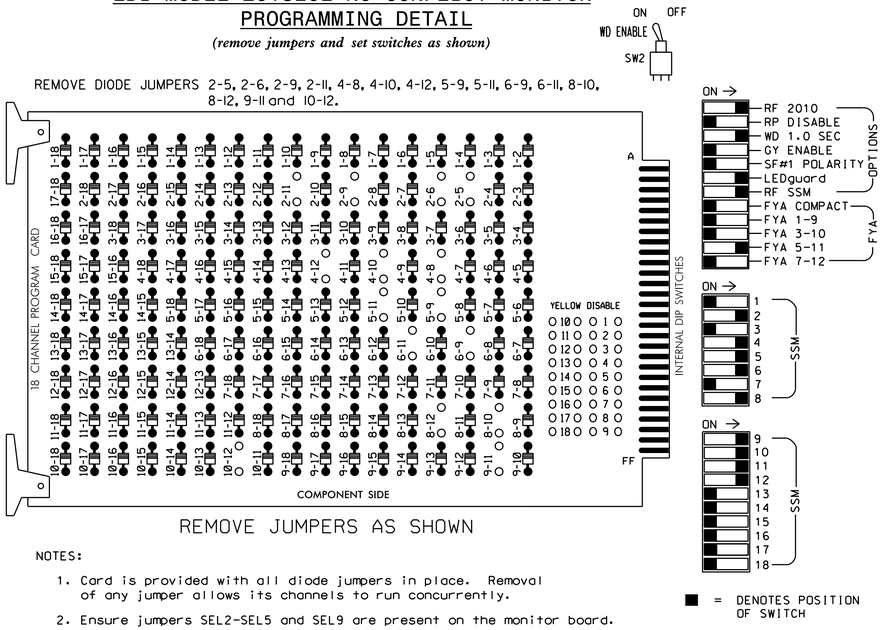

REMOVE JUMPERS AS SHOWN

NOTES:

1. Card is provided with all diode jumpers in place. Removal of any jumper allows its channels to run concurrently.
2. Ensure jumpers SEL2-SEL5 and SEL9 are present on the monitor board.
3. Ensure that Red Enable is active at all times during normal operation.
4. Connect serial cable from conflict monitor to comm. port 1 of 2070 controller. Ensure conflict monitor communicates with 2070.

NOTES

1. To prevent "flash-conflict" problems, insert red flash program blocks for all unused vehicle load switches in the output file. The installer shall verify that signal heads flash in accordance with the Signal Plans.
2. Program phases 4 and 8 for Dual Entry.
3. Enable Simultaneous Gap-Out for all phases.
4. Program phase 2 for Variable Initial and Gap Reduction.
5. Program phases 2 and 6 for Start Up In Green.
6. Program phases 2 and 6 for Yellow Flash and overlaps 1 and 2 as Wag Overlaps.
7. The cabinet and controller are part of the NC 24-27 Closed Loop System.

EQUIPMENT INFORMATION

CONTROLLER.....2070L
CABINET.....332 /W/ AUX
SOFTWARE.....ECONOLITE OASIS
CABINET MOUNT.....BASE
OUTPUT FILE POSITIONS...18 WITH AUX. OUTPUT FILE
LOAD SWITCHES USED.....S2,S5,S7,S8,S11,AUX S1, AUX S2,AUX S4,AUX S5.
PHASES USED.....2,4,5,6,8.
OVERLAP "A".....2
OVERLAP "B".....4
OVERLAP "C".....5+6
OVERLAP "D".....8

SIGNAL HEAD HOOK-UP CHART

LOAD SWITCH NO.	S1	S2	S3	S4	S5	S6	S7		S8	S9	S10	S11	S12	AUX S1	AUX S2	AUX S3	AUX S4	AUX S5	AUX S6
CMU CHANNEL NO.	1	2	13	3	4	14	5		6	15	7	8	16	9	10	17	11	12	18
PHASE	1	2	2 PED	3	4	4 PED	5		6	6 PED	7	8	8 PED	OLA	OLB	SPARE	OLC	OLD	SPARE
SIGNAL HEAD NO.	NU	21,22	NU	NU	42,43	NU	43	51★	62 63,64	NU	NU	82,83	NU	61★	81★	NU	51★	41★	NU
RED		128			101			*	134			107							
YELLOW		129			102				135			108							
GREEN		130			103				136			109							
RED ARROW														A121	A124		A114	A101	
YELLOW ARROW							132							A122	A125		A115	A102	
FLASHING YELLOW ARROW														A123	A126		A116	A103	
GREEN ARROW							133	133											

NU = Not Used

* Denotes install load resistor. See load resistor installation detail this sheet.

★ See pictorial of head wiring in detail below.

4 SECTION FYA PPLT SIGNAL WIRING DETAIL

(wire signal heads as shown)

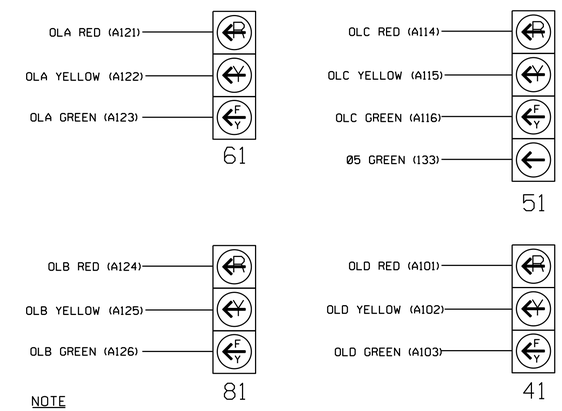

NOTE

1. The sequence display for these signals require special logic programming. See sheet 2 for programming instructions.

INPUT FILE POSITION LAYOUT

(front view)

		1	2	3	4	5	6	7	8	9	10	11	12	13	14
FILE "I"	U	SLOT EMPTY	Ø2 2A	SLOT EMPTY	WIRED INPUT ⊗	SLOT EMPTY	Ø4 4A	SLOT EMPTY	SLOT EMPTY	SLOT EMPTY	SLOT EMPTY	SLOT EMPTY	SLOT EMPTY	SLOT EMPTY	FS DC ISOLATOR
	L		NOT USED				Ø4 4B								ST DC ISOLATOR
FILE "J"	U	Ø5 5A	Ø5 5B	Ø6 6A	Ø6 6C	SLOT EMPTY	Ø8 8A	SLOT EMPTY	SLOT EMPTY	SLOT EMPTY	SLOT EMPTY	SLOT EMPTY	SLOT EMPTY	SLOT EMPTY	SLOT EMPTY
	L	NOT USED	Ø5 5C	Ø6 6B	NOT USED		Ø8 8B								

EX.: 1A, 2A, ETC. = LOOP NO.'S

FS = FLASH SENSE
ST = STOP TIME

⊗ Wired Input - Do not populate slot with detector card

INPUT FILE CONNECTION & PROGRAMMING CHART

LOOP NO.	LOOP TERMINAL	INPUT FILE POS.	PIN NO.	INPUT ASSIGNMENT NO.	DETECTOR NO.	NEMA PHASE	CALL	EXTEND	FULL TIME DELAY	STRETCH TIME	DELAY TIME
2A	TB2-5,6	I2U	39	1	2	2	Y	Y			
4A	TB4-9,10	I6U	41	3	4	4	Y	Y			3
4B	TB4-11,12	I6L	45	7	14	4	Y	Y			
5A[1]	TB3-1,2	J1U	55	17	5	5	Y	Y			15
	-	I4U	47	9	22	2	Y	Y	Y		3
5B	TB3-5,6	J2U	40	2	6	5	Y	Y			10
5C	TB3-7,8	J2L	44	6	16	5	Y	Y			15
6A	TB3-9,10	J3U	64	26	36	6		Y		2.4	
6B	TB3-11,12	J3L	77	39	46	6	Y	Y			10
6C	TB5-1,2	J4U	48	10	26	6	Y	Y			3
8A	TB5-9,10	J6U	42	4	8	8	Y	Y			3
8B	TB5-11,12	J6L	46	8	18	8	Y	Y			5

[1] Add jumper from J1-W to I4-W. on rear of input file.

INPUT FILE POSITION LEGEND: J2L
FILE J
SLOT 2
LOWER

LOAD RESISTOR INSTALLATION DETAIL

(install resistors as shown below)

ACCEPTABLE VALUES

VALUE (ohms)	WATTAGE
1.5K - 1.9K	25W (min)
2.0K - 3.0K	10W (min)

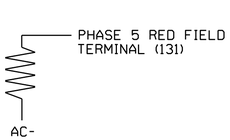

THIS ELECTRICAL DETAIL IS FOR
THE SIGNAL DESIGN: 08-0816
DESIGNED: July 2014
SEALED: 7-23-14
REVISED: N/A

ELECTRICAL DETAIL SHEET 1 OF 2

ELECTRICAL AND PROGRAMMING DETAILS FOR:

Prepared in the Offices of:
Transportation Mobility and Safety Division
Traffic Engineering Branch
Signals Management Section
750 N.Greenfield Pkwy,Garner,NC 27529

NC 24-27 Business (Biscoe Rd.) at SR 1332 (Page Street)

Division 8 Montgomery County Troy

PLAN DATE: July 2014 REVIEWED BY: DS JTK
PREPARED BY: James Peterson REVIEWED BY:

REVISIONS	INIT.	DATE

SEAL
NORTH CAROLINA PROFESSIONAL SEAL 008453 ENGINEER JOHN T. ROWE, JR.

DocuSigned by: John T. Rowe, Jr. 7/30/2014
641D9C145EF4F4 DATE

SIG. INVENTORY NO. 08-0816

30-JUL-2014 09:09
S:\TOS\SGN\TS Signals\Workgroups\Sig Mon\Peterson\080816_sm_elm_xxx.dgn
jtpeterson