PROJECT REFERENCE NO.	SHEET NO.
R-0623	Sig. 4.0

PHASING DIAGRAM

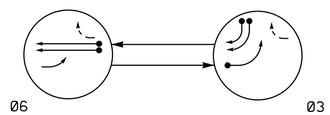

PHASING DIAGRAM DETECTION LEGEND

- DETECTED MOVEMENT
- UNDETECTED MOVEMENT (OVERLAP)
- UNSIGNALIZED MOVEMENT
- PEDESTRIAN MOVEMENT

TABLE OF OPERATION

SIGNAL FACE	PHASE Ø3	PHASE Ø6	FLASH
31	←	F Y	Y
32, 33	→	R	R
61, 62	R	G	Y

SIGNAL FACE I.D.

All Heads L.E.D.

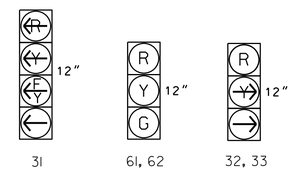

OASIS 2070 LOOP & DETECTOR INSTALLATION CHART

INDUCTIVE LOOPS					DETECTOR PROGRAMMING							
LOOP	SIZE (FT)	DISTANCE FROM STOPBAR (FT)	TURNS	NEW LOOP	PHASE	CALLING	EXTENSION	FULL TIME DELAY	STRETCH TIME	DELAY TIME	SYSTEM LOOP	NEW CARD
3A	6X40	0	2-4-2	Y	3	Y	Y	-	-	15	-	Y
3B	6X40	0	2-4-2	Y	3	Y	Y	-	-	15	-	Y
3C	6X40	0	2-4-2	Y	3	Y	Y	-	-	15	-	Y
6A	6X6	420	5	Y	6	Y	Y	-	-	-	-	Y
6B	6X6	420	5	Y	6	Y	Y	-	-	-	-	Y

2 Phase
Fully Actuated
(NC 24-27 Closed Loop System)

NOTES

1. Refer to "Roadway Standard Drawings NCDOT" dated January 2012 and "Standard Specifications for Roads and Structures" dated January 2012.
2. Do not program signal for late night flashing operation unless otherwise directed by the Engineer.
3. Set all detector units to presence mode.
4. Locate new cabinet so as not to obstruct sight distance of vehicles turning right on red.
5. Maximum times shown in timing chart are for free-run operation only. Coordinated signal system timing values supersede these values.
6. Closed loop system data:
   Master Asset #: 10824.
   Controller Asset #: 1108.

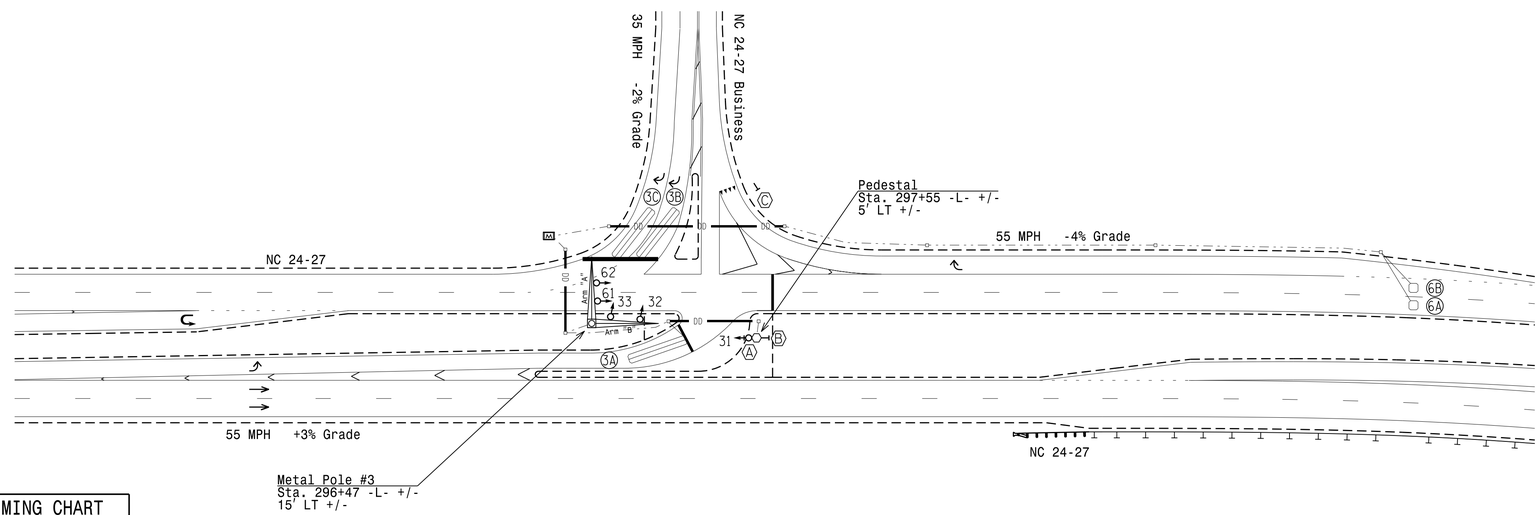

LEGEND

PROPOSED		EXISTING
	Traffic Signal Head	
	Modified Signal Head	N/A
	Sign	
	Pedestrian Signal Head With Push Button & Sign	
	Signal Pole with Guy	
	Signal Pole with Sidewalk Guy	
	Inductive Loop Detector	
	Controller & Cabinet	
	Junction Box	
	2-in Underground Conduit	
N/A	Right of Way	
	Directional Arrow	
M	Master Controller & Cabinet	M
	Metal Pole with Mastarm	
	Type II Signal Pedestal	
DD	Directional Drill	N/A
N/A	Guardrail	
A	No U-Turn Sign (R3-4)	A
B	No Left Turn Sign (R3-2)	B
C	"YIELD" Sign (R1-2)	C

OASIS 2070 TIMING CHART

FEATURE	PHASE 3	PHASE 6
Min Green 1 *	7	14
Extension 1 *	2.0	6.0
Max Green 1 *	25	90
Yellow Clearance	3.1	5.6
Red Clearance	1.5	1.1
Red Revert	2.0	2.0
Walk 1 *	-	-
Don't Walk 1	-	-
Seconds Per Actuation *	-	1.5
Max Variable Initial *	-	46
Time Before Reduction *	-	15
Time To Reduce *	-	45
Minimum Gap	-	3.4
Recall Mode	-	MIN RECALL
Vehicle Call Memory	-	YELLOW
Dual Entry	-	-
Simultaneous Gap	ON	ON

* These values may be field adjusted. Do not adjust Min Green and Extension times for phase 6 lower than what is shown. Min Green for all other phases should not be lower than 4 seconds.

New Installation

Prepared in the Offices of:
Transportation Mobility and Safety Division
Signal Design Section
750 N.Greenfield Pkwy.Garner,NC 27529

NC 24-27 WB
at
NC 24-27 Business
(East Intersection)

Division 8 Montgomery County Troy

PLAN DATE: July 2014 REVIEWED BY:
PREPARED BY: I. O. Umozurike REVIEWED BY:

SCALE 0 50 1"=50'

REVISIONS	INIT.	DATE

SEAL
NORTH CAROLINA PROFESSIONAL SEAL 026486 ENGINEER ROBERT J. ZIEMBA

DocuSigned by: 7/23/2014
SIGNATURE DATE

SIG. INVENTORY NO. 08-1108

23-JUL-2014 17:22
R:\Traffic\Signals\Designs\Signals\08-1108\081108_sig_dsn_2014mmdd.dgn
rziemba