TIP NO.	SHEET NO.
R-0623	SIGN-18

APPROVED: DocuSigned by: Charles A. Johnson, III 59A1565B47F54A6...

DATE: 08/04/2014

SEAL

NORTH CAROLINA PROFESSIONAL SEAL 20675 ENGINEER CHARLES A. JOHNSON III

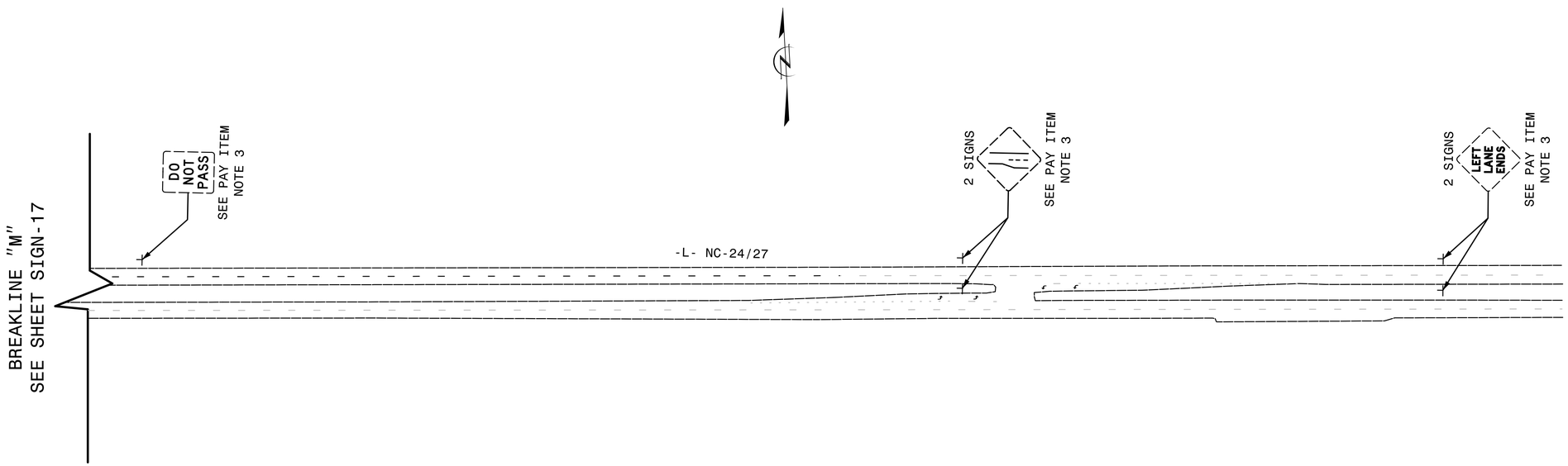

HNTB
HNTB NORTH CAROLINA, P.C.
343 E. Six Forks Road, Suite 200
Raleigh, North Carolina 27609
NC License No: C-1554

EXISTING SIGNS
NC-24/27