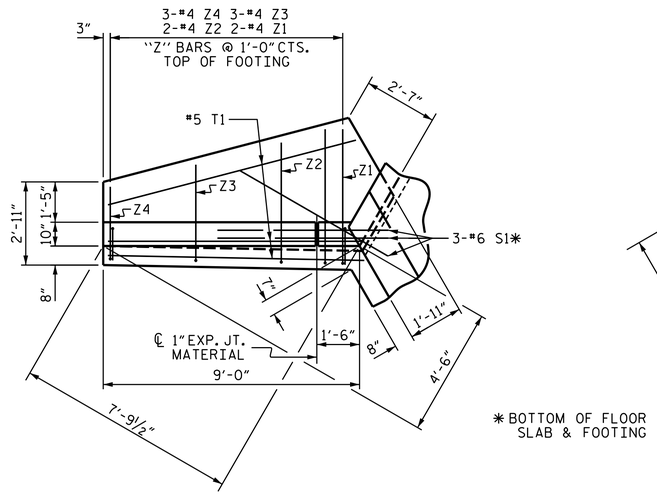

PLAN W2

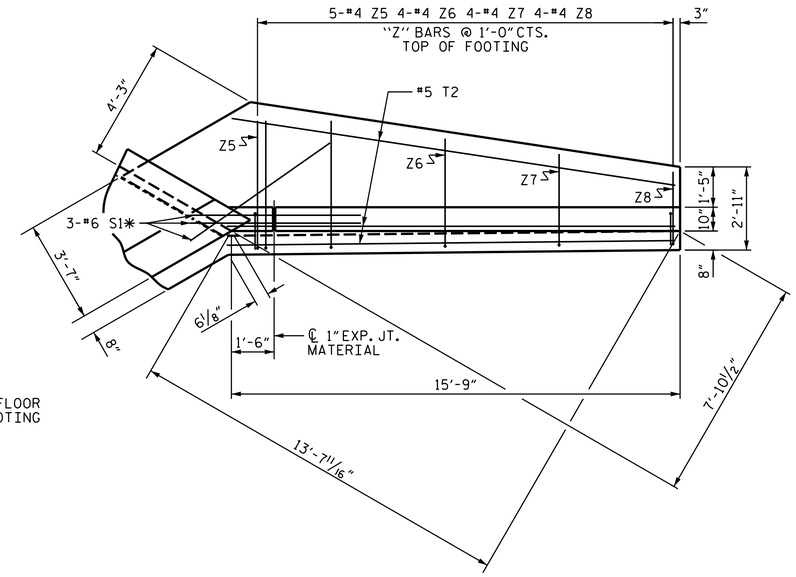

PLAN W1

* BOTTOM OF FLOOR SLAB & FOOTING

NOTE

A 3 FOOT STRIP OF FILTER FABRIC SHALL BE ATTACHED TO THE FILL FACE OF THE WING COVERING THE ENTIRE LENGTH OF THE EXPANSION JOINT.

BAR TYPES

ALL BAR DIMENSIONS ARE OUT TO OUT.

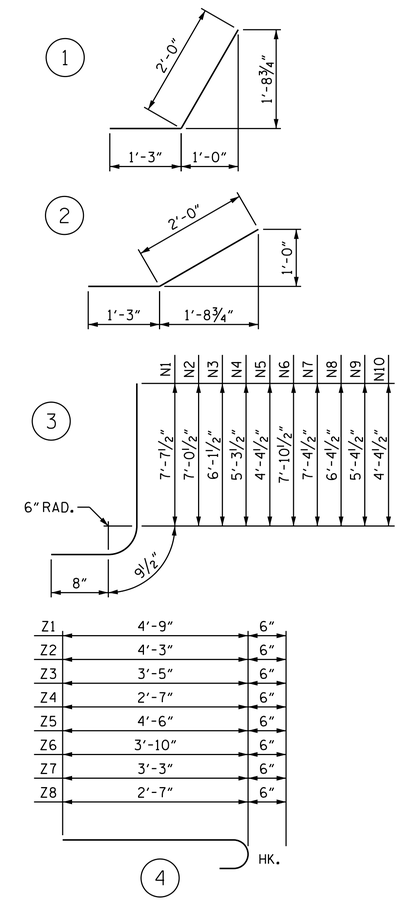

BILL OF MATERIAL

BAR	NO.	SIZE	TYPE	LENGTH	WEIGHT
H1	12	#4	STR	7'-1"	57
H2	4	#4	STR	5'-2"	14
H3	24	#4	1	3'-3"	52
H4	4	#4	STR	7'-9"	21
H5	12	#4	STR	13'-10"	111
H6	4	#4	STR	10'-4"	28
H7	4	#4	STR	4'-3"	11
H8	24	#4	2	3'-3"	52
H9	4	#4	STR	14'-3"	38
N1	4	#5	3	9'-1"	38
N2	4	#5	3	8'-6"	35
N3	4	#4	3	7'-7"	20
N4	4	#4	3	6'-9"	18
N5	4	#4	3	5'-10"	16
N6	4	#5	3	9'-4"	39
N7	6	#5	3	8'-10"	55
N8	8	#4	3	7'-10"	42
N9	8	#4	3	6'-10"	37
N10	8	#4	3	5'-10"	31
S1	12	#6	STR	6'-0"	108
T1	6	#5	STR	9'-0"	56
T2	6	#5	STR	15'-9"	99
V1	4	#4	STR	7'-1"	19
V2	4	#4	STR	6'-5"	17
V3	4	#4	STR	5'-7"	15
V4	4	#4	STR	4'-8"	12
V5	4	#4	STR	3'-10"	10
V6	4	#4	STR	7'-4"	20
V7	6	#4	STR	6'-9"	27
V8	8	#4	STR	5'-9"	31
V9	8	#4	STR	4'-9"	25
V10	8	#4	STR	3'-10"	20
Z1	4	#4	4	5'-3"	14
Z2	4	#4	4	4'-9"	13
Z3	6	#4	4	3'-11"	16
Z4	6	#4	4	3'-1"	12
Z5	10	#4	4	5'-0"	33
Z6	8	#4	4	4'-4"	23
Z7	8	#4	4	3'-9"	20
Z8	8	#4	4	3'-1"	16

REINFORCING STEEL FOR 4 WINGS 1321 LBS.

CLASS A CONCRETE
- 4 WINGS 19.8 C.Y.
- 2 HEADWALLS 0.8 C.Y.
- 2 END CURTAIN WALLS 0.7 C.Y.
- TOTAL 21.3 C.Y.

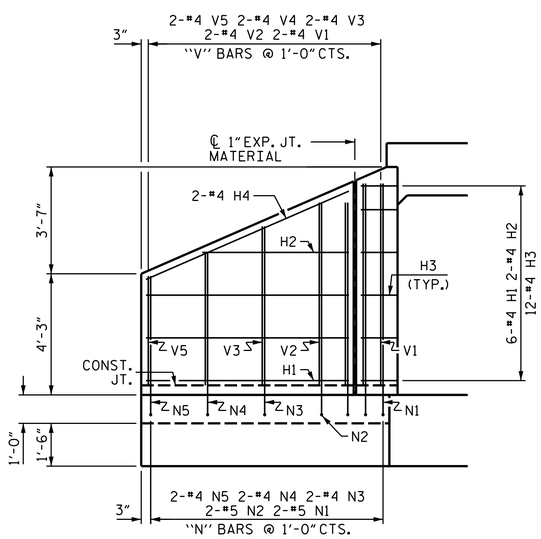

ELEVATION W2

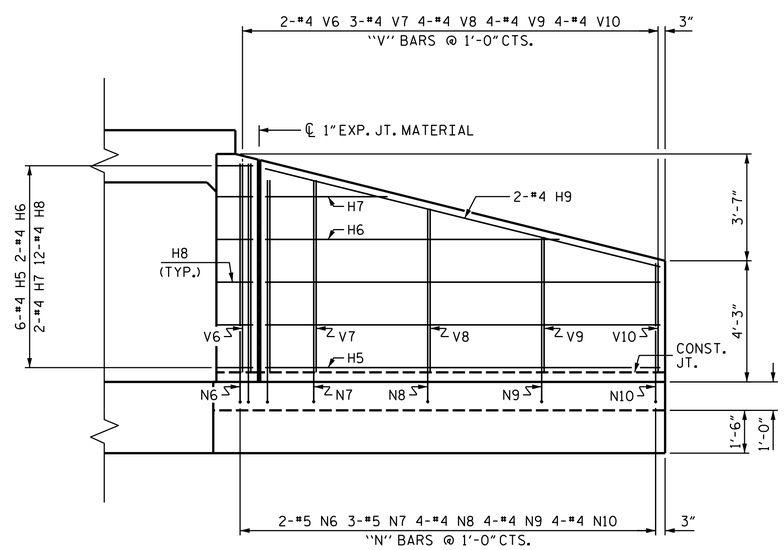

ELEVATION W1

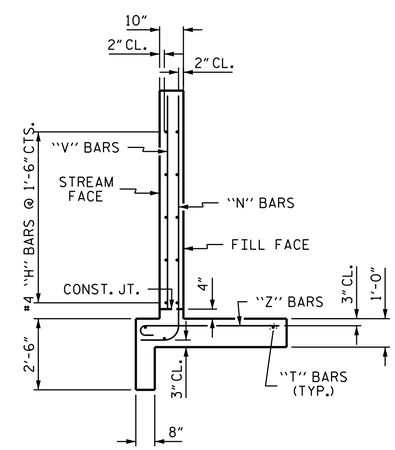

TYPICAL WING SECTION

PROJECT NO. R-2519B

MITCHELL COUNTY

STATION: 11+07.96 -Y34-

SHEET 4 OF 5

STATE OF NORTH CAROLINA
DEPARTMENT OF TRANSPORTATION
RALEIGH

WINGS FOR CONCRETE BOX CULVERT

H = 7'-0" SLOPE = 2:1

NORTH CAROLINA PROFESSIONAL SEAL 20125 ENGINEER MARSHALL G. CHECK, JR.

Marshall G. Check, Jr.
6549D6E8AA3B405...
8/27/2014

ASSEMBLED BY : A. SORSENGINH/VXN	DATE : 9/2011
CHECKED BY : H. KIM	DATE : 10/2011
DRAWN BY : CCJ	11/99
CHECKED BY : RWW	03/00

REVISIONS								SHEET NO.
NO.	BY:	DATE:	NO.	BY:	DATE:			C-86
1			3					TOTAL SHEETS
2			4					87

STR. #15