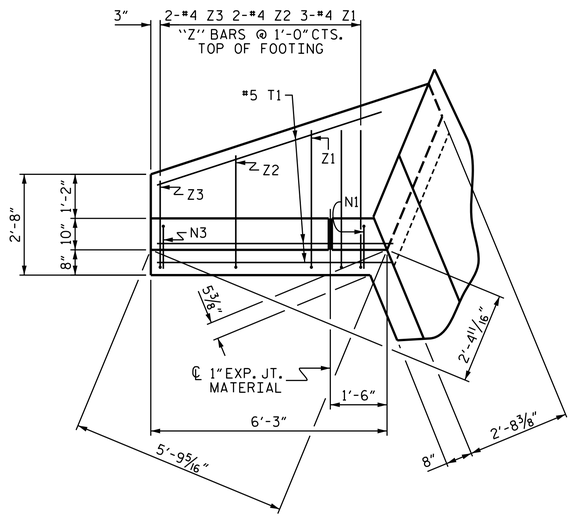

PLAN W2

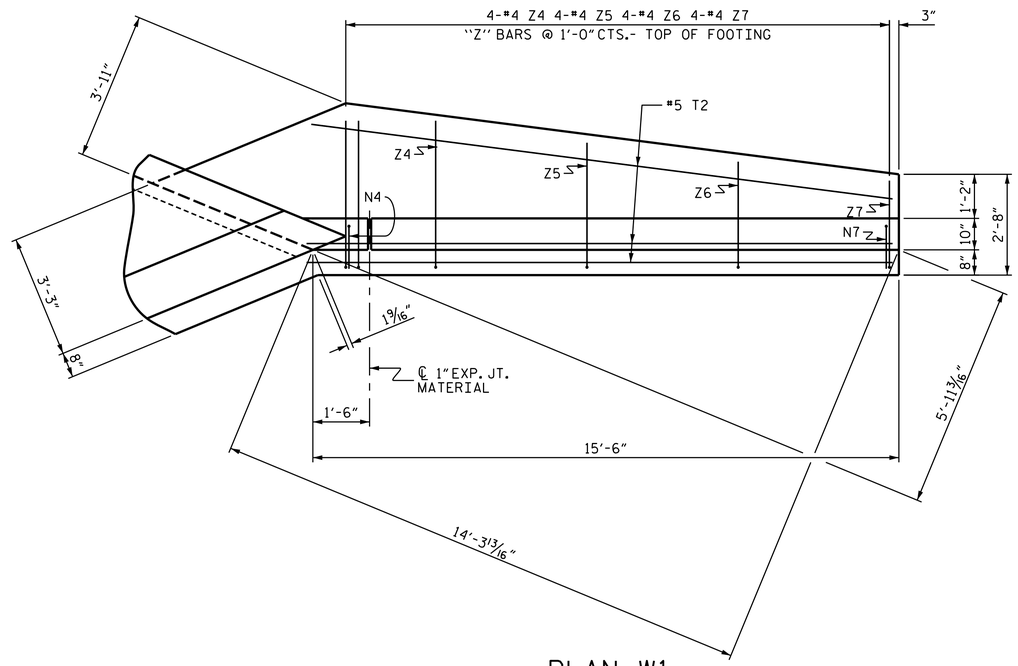

PLAN W1

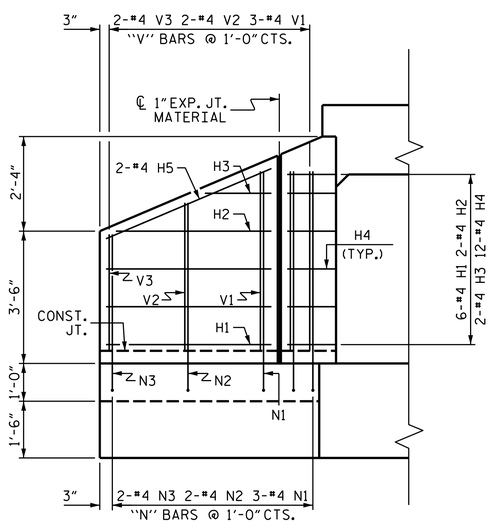

ELEVATION W2

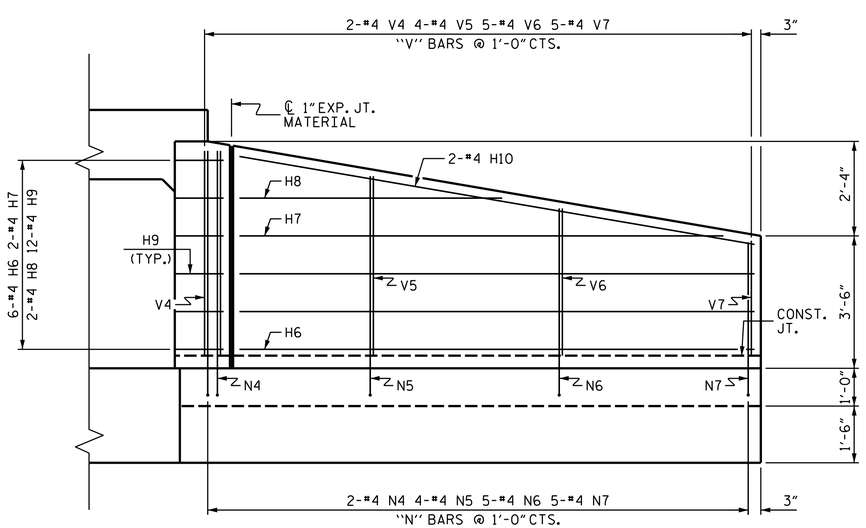

ELEVATION W1

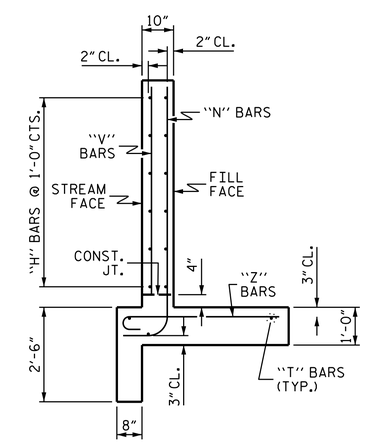

TYPICAL WING SECTION

BAR TYPES

ALL BAR DIMENSIONS ARE OUT TO OUT.

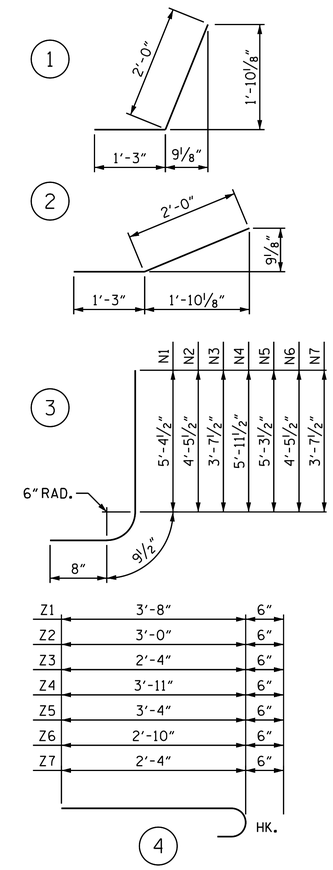

BILL OF MATERIAL

BAR	NO.	SIZE	TYPE	LENGTH	WEIGHT
H1	6	#4	STR	4'-4"	17
H2	2	#4	STR	4'-1"	5
H3	2	#4	STR	1'-9"	2
H4	12	#4	1	3'-3"	26
H5	2	#4	STR	4'-9"	6
H6	6	#4	STR	13'-7"	54
H7	2	#4	STR	12'-9"	17
H8	2	#4	STR	6'-11"	9
H9	12	#4	2	3'-3"	26
H10	2	#4	STR	13'-9"	18
N1	3	#4	3	6'-10"	14
N2	2	#4	3	5'-11"	8
N3	2	#4	3	5'-1"	7
N4	2	#4	3	7'-5"	10
N5	4	#4	3	6'-9"	18
N6	5	#4	3	5'-11"	20
N7	5	#4	3	5'-1"	17
T1	3	#5	STR	6'-3"	20
T2	3	#5	STR	15'-6"	48
V1	3	#4	STR	4'-9"	10
V2	2	#4	STR	3'-11"	5
V3	2	#4	STR	3'-1"	4
V4	2	#4	STR	5'-5"	7
V5	4	#4	STR	4'-9"	13
V6	5	#4	STR	3'-10"	13
V7	5	#4	STR	3'-0"	10
Z1	3	#4	4	4'-2"	8
Z2	2	#4	4	3'-6"	5
Z3	2	#4	4	2'-10"	4
Z4	4	#4	4	4'-5"	12
Z5	4	#4	4	3'-10"	10
Z6	4	#4	4	3'-4"	9
Z7	4	#4	4	2'-10"	8

REINFORCING STEEL FOR 2 WINGS 460 LBS.

CLASS A CONCRETE

2 WINGS	7.4	C.Y.
1 HEADWALL	0.5	C.Y.
1 END CURTAIN WALL	0.5	C.Y.
2 EDGE BEAMS	0.8	C.Y.
TOTAL	9.2	C.Y.

NOTE:

A 3 FOOT STRIP OF FILTER FABRIC SHALL BE ATTACHED TO THE FILL FACE OF THE WING COVERING THE ENTIRE LENGTH OF THE EXPANSION JOINT.

PROJECT NO. R-2519B

YANCEY COUNTY

STATION: 155+44.57 -L-

SHEET 5 OF 11

STATE OF NORTH CAROLINA
DEPARTMENT OF TRANSPORTATION
RALEIGH

WINGS FOR CONCRETE BOX CULVERT LEFT EXTENSION

H = 5'-0" SLOPE = 2:1

NORTH CAROLINA PROFESSIONAL SEAL 20125 ENGINEER MARSHALL G. CHEEK, JR.

8/27/2014 Marshall G. Cheek, Jr.

REVISIONS						SHEET NO.
NO.	BY:	DATE:	NO.	BY:	DATE:	C-34
1			3			TOTAL SHEETS
2			4			87

ASSEMBLED BY :	A. SORSENGINH	DATE :	8/2011
CHECKED BY :	H. KIM	DATE :	8/2011
DRAWN BY :	CCJ	01/00	
CHECKED BY :	RWW	03/00	

STR. #9 STD. NO. CW4505