BAR SCHEDULE - LEFT EXTENSION

BAR	NO.	SIZE	TYPE	LENGTH	WEIGHT	BAR	NO.	SIZE	TYPE	LENGTH	WEIGHT	BAR	NO.	SIZE	TYPE	LENGTH	WEIGHT	BAR	NO.	SIZE	TYPE	LENGTH	WEIGHT	BAR	NO.	SIZE	TYPE	LENGTH	WEIGHT
A1	224	5	1	6'-7"	1538	A200	175	5	STR	29'-3"	5339	A300	175	5	STR	51'-2"	9339	A400	175	5	STR	29'-3"	5339	B1	256	4	STR	12'-1"	2066
A2	1109	4	1	4'-10"	3581																			B2	224	5	STR	9'-4"	2181
						A201	3	5	STR	27'-10"	87	A301	3	5	STR	49'-9"	156	A401	3	5	STR	27'-10"	87	B3	672	4	STR	12'-1"	5424
A100	175	5	STR	51'-2"	9339	A202	3	5	STR	26'-2"	82	A302	3	5	STR	48'-1"	150	A402	3	5	STR	26'-2"	82						
						A203	3	5	STR	24'-7"	77	A303	3	5	STR	46'-6"	145	A403	3	5	STR	24'-7"	77	C1	396	4	STR	29'-9"	7870
A101	3	5	STR	49'-9"	156	A204	3	5	STR	23'-0"	72	A304	3	5	STR	44'-11"	141	A404	3	5	STR	23'-0"	72	C2	415	4	STR	28'-7"	7924
A102	3	5	STR	48'-1"	150	A205	3	5	STR	21'-4"	67	A305	3	5	STR	43'-3"	135	A405	3	5	STR	21'-4"	67						
A103	3	5	STR	46'-6"	145	A206	3	5	STR	19'-9"	62	A306	3	5	STR	41'-8"	130	A406	3	5	STR	19'-9"	62	D1	49	6	STR	2'-6''	184
A104	3	5	STR	44'-11"	141	A207	3	5	STR	18'-2"	57	A307	3	5	STR	40'-1"	125	A407	3	5	STR	18'-2"	57	D2	39	6	STR	1'-11"	112
A105	3	5	STR	43'-3"	135	A208	3	5	STR	16'-6"	52	A308	3	5	STR	38'-5"	120	A408	3	5	STR	16'-6"	52						
A106	3	5	STR	41'-8"	130	A209	3	5	STR	14'-11"	47	A309	3	5	STR	36'-10"	115	A409	3	5	STR	14'-11"	47	G1	4	5	STR	51'-2"	213
A107	3	5	STR	40'-1"	125	A210	3	5	STR	13'-4"	42	A310	3	5	STR	35'-3"	110	A410	3	5	STR	13'-4"	42						
A108	3	5	STR	38'-5"	120	A211	3	5	STR	11'-8"	37	A311	3	5	STR	33'-7"	105	A411	3	5	STR	11'-8"	37	H1	8	4	STR	20'-4"	109
A109	3	5	STR	36'-10"	115	A212	3	5	STR	10'-1"	32	A312	3	5	STR	32'-0"	100	A412	3	5	STR	10'-1"	32	H2	8	4	STR	17'-6"	94
A110	3	5	STR	35'-3"	110	A213	3	5	STR	8'-6"	27	A313	3	5	STR	30'-5"	95	A413	3	5	STR	8'-6"	27						
A111	3	5	STR	33'-7"	105	A214	3	5	STR	6'-11"	22	A314	3	5	STR	28'-10"	90	A414	3	5	STR	6'-11"	22	L1	32	6	3	2'-9''	132
A112	3	5	STR	32'-0"	100	A215	3	5	STR	5'-3"	16	A315	3	5	STR	27'-2"	85	A415	3	5	STR	5'-3"	16	L2	28	6	3	2'-3''	95
A113	3	5	STR	30'-5"	95	A216	3	5	STR	3'-8"	11	A316	3	5	STR	25'-7"	80	A416	3	5	STR	3'-8"	11	L3	32	6	2	2'-9''	132
A114	3	5	STR	28'-10"	90							A317	3	5	STR	24'-0"	75							L4	28	6	2	3'-3''	137
A115	3	5	STR	27'-2"	85	A250	226	5	STR	24'-1"	5677	A318	3	5	STR	22'-4"	70	A450	226	5	STR	24'-1"	5677						
A116	3	5	STR	25'-7"	80							A319	3	5	STR	20'-9"	65							S2	6	6	STR	39'-10"	359
A117	3	5	STR	24'-0"	75	A251	3	5	STR	22'-8"	71	A320	3	5	STR	19'-2"	60	A451	3	5	STR	22'-8"	71	S3	6	6	STR	32'-11"	297
A118	3	5	STR	22'-4"	70	A252	3	5	STR	21'-0"	66	A321	3	5	STR	17'-6"	55	A452	3	5	STR	21'-0"	66	S4	12	6	STR	36'-5"	656
A119	3	5	STR	20'-9"	65	A253	3	5	STR	19'-5"	61	A322	3	5	STR	15'-11"	50	A453	3	5	STR	19'-5"	61						
A120	3	5	STR	19'-2"	60	A254	3	5	STR	17'-10"	56	A323	3	5	STR	14'-4"	45	A454	3	5	STR	17'-10"	56						
A121	3	5	STR	17'-6"	55	A255	3	5	STR	16'-2"	51	A324	3	5	STR	12'-9"	40	A455	3	5	STR	16'-2"	51						
A122	3	5	STR	15'-11"	50	A256	3	5	STR	14'-7"	46	A325	3	5	STR	11'-1"	35	A456	3	5	STR	14'-7"	46						
A123	3	5	STR	14'-4"	45	A257	3	5	STR	13'-0"	41	A326	3	5	STR	9'-6"	30	A457	3	5	STR	13'-0"	41						
A124	3	5	STR	12'-9"	40	A258	3	5	STR	11'-4"	35	A327	3	5	STR	7'-11"	25	A458	3	5	STR	11'-4"	35						
A125	3	5	STR	11'-1"	35	A259	3	5	STR	9'-9"	31	A328	3	5	STR	6'-3"	20	A459	3	5	STR	9'-9"	31						
A126	3	5	STR	9'-6"	30	A260	3	5	STR	8'-2"	26	A329	3	5	STR	4'-8"	15	A460	3	5	STR	8'-2"	26						
A127	3	5	STR	7'-11"	25	A261	3	5	STR	6'-6"	20	A330	6	5	STR	3'-1"	19	A461	3	5	STR	6'-6"	20						
A128	3	5	STR	6'-3"	20	A262	3	5	STR	4'-11"	15							A462	3	5	STR	4'-11"	15						
A129	3	5	STR	4'-8"	15	A263	6	5	STR	3'-4"	21							A463	6	5	STR	3'-4"	21						
A130	6	5	STR	3'-1"	19																								
																								REINFORCING STEEL					81,446 LBS.

SPLICE LENGTH CHART

BAR	SIZE	SPLICE LENGTH
A200	5	2'-2''
A400	5	2'-2''
''C''	4	1'-11''
''S''	6	2'-9''

BAR TYPE

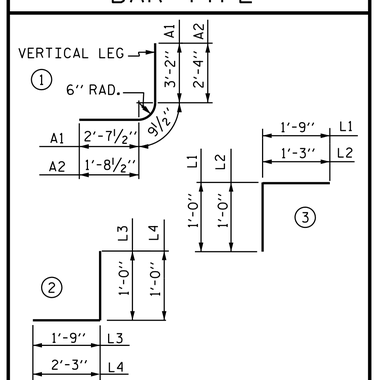

BAR DIMENSIONS ARE OUT TO OUT

LEFT EXTENSION QUANTITIES

CLASS A CONCRETE

BARREL @	6.320 CY/FT	705.2 C.Y.
WINGS, ETC.		28.8 C.Y.
SILLS		5.8 C.Y.
TOTAL		739.8 C.Y.

REINFORCING STEEL

BARREL	81,446 LBS.
WINGS, ETC.	1,210 LBS.
TOTAL	82,656 LBS.

CULVERT EXCAVATION ---------- LUMP SUM

FOUNDATION COND. MAT'L. --------- 405 TONS

PROJECT NO. R-2519B

YANCEY COUNTY

STATION: 44+11.92 -L-

SHEET 7 OF 17

STATE OF NORTH CAROLINA
DEPARTMENT OF TRANSPORTATION
RALEIGH

QUADRUPLE
12 FT. X 10 FT.
CONCRETE BOX
CULVERT
LEFT EXTENSION

NORTH CAROLINA PROFESSIONAL SEAL 20125 ENGINEER MARSHALL C. CHEEK, JR.

6/27/2014

DocuSigned by: Marshall C. Cheek, Jr.
6549D6EBAA3B405...

REVISIONS								SHEET NO.
NO.	BY:	DATE:	NO.	BY:	DATE:			C-7
1			3					TOTAL SHEETS
2			4					87

DRAWN BY : M. POOLE/DAH DATE : 8/13
CHECKED BY : D. A. GLADDEN DATE : 10/13
DESIGN ENGINEER OF RECORD: J. R. MCROY DATE : 10/13

$$$$$$$SYSTIME$$$$$
$$$$$$$$$$$$$$$$$$$$$$$$DGN$$$$$$$$$$$$$$$$$$$$$$$
$$$$USERNAME$$$$

STR. #7