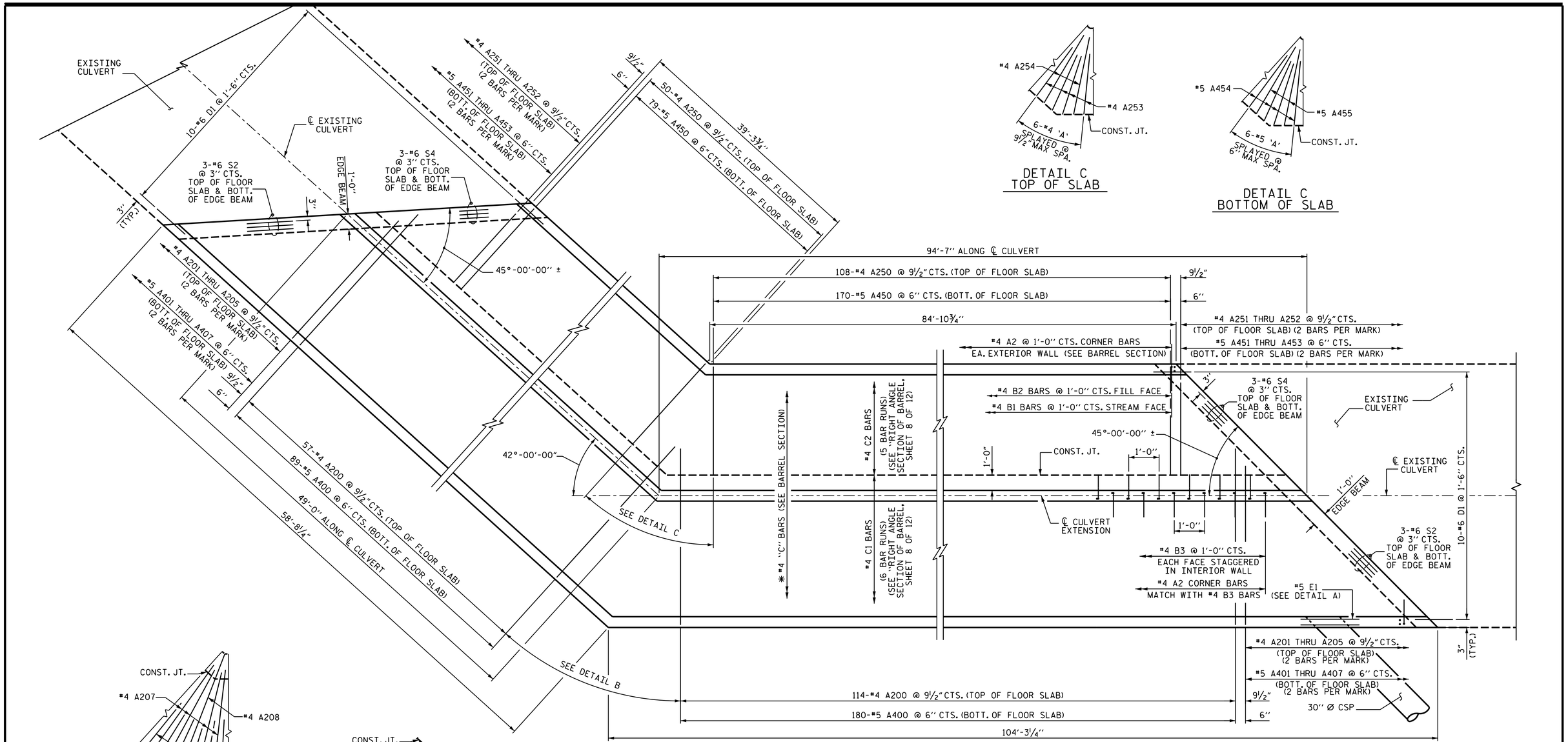

DETAIL C
TOP OF SLAB

DETAIL C
BOTTOM OF SLAB

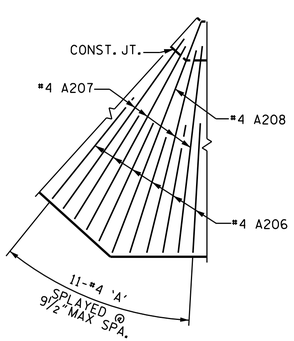

DETAIL B
TOP OF SLAB

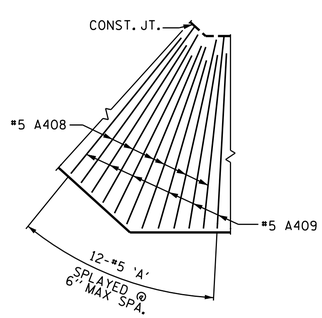

DETAIL B
BOTTOM OF SLAB

PLAN-FLOOR SLAB

* #4 "C" BARS SHALL BE FIELD BENT AS NECESSARY.

PROJECT NO. R-2519B
YANCEY COUNTY
STATION: 134+80.45 -L-

SHEET 9 OF 12

STATE OF NORTH CAROLINA
DEPARTMENT OF TRANSPORTATION
RALEIGH

DOUBLE 6 FT. X 6 FT. CONCRETE BOX CULVERT

MIDDLE EXTENSION

NORTH CAROLINA PROFESSIONAL SEAL 20125 ENGINEER MARSHALL G. CHECK, JR.
Marshall G. Check, Jr.
8/27/2014

REVISIONS						SHEET NO.
NO.	BY:	DATE:	NO.	BY:	DATE:	C-26
1			3			TOTAL SHEETS
2			4			87

STR #8

DRAWN BY : A. SORSENGINH/MEP DATE : 9/2013
CHECKED BY : D. HODGE DATE : 10/13
DESIGN ENGINEER OF RECORD: M.A. LEBLANC DATE : 10/13

$$$$$$$SYSTIME$$$$$
$$$$$$$$$$$$$$$$$$$$$$$$$DGN$$$$$$$$$$$$$$$$$$$$$$$
$$$$USERNAME$$$$