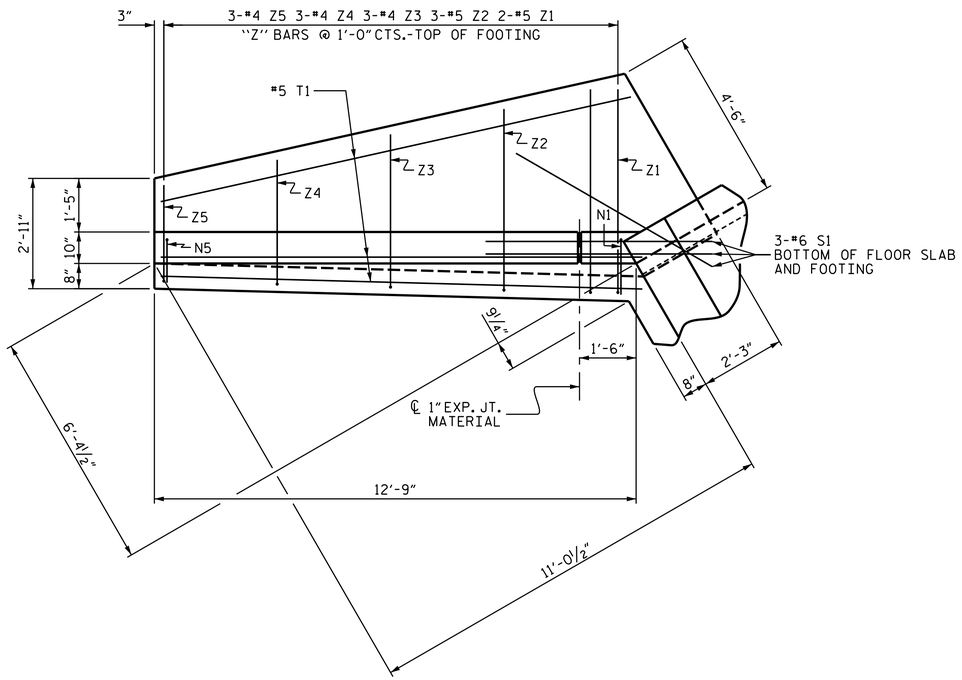

PLAN

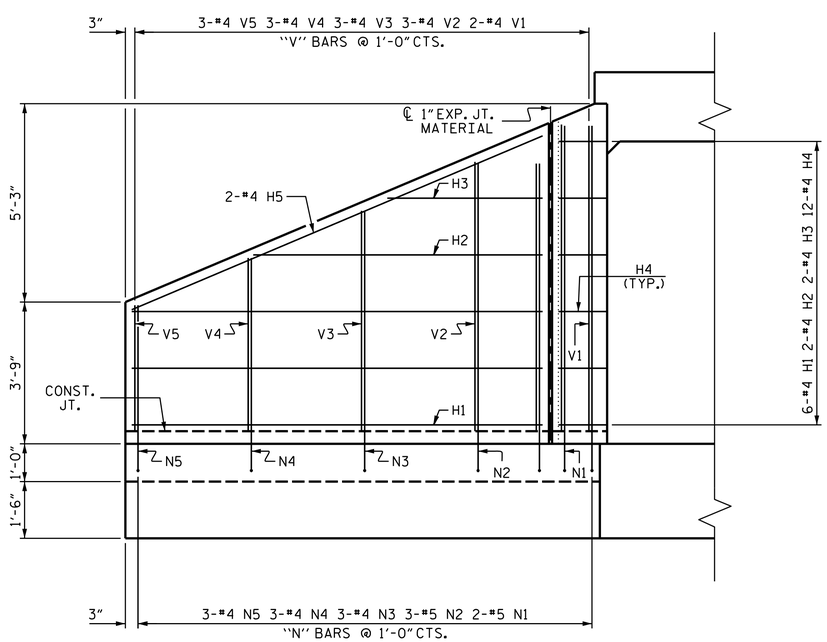

ELEVATION

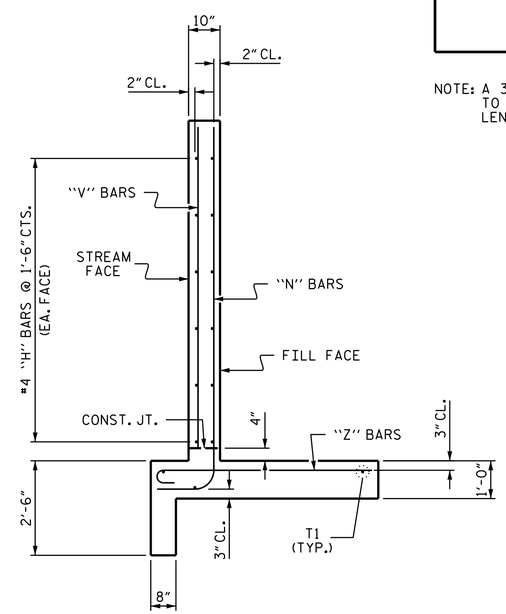

TYPICAL WING SECTION

BAR TYPES

ALL BAR DIMENSIONS ARE OUT TO OUT.

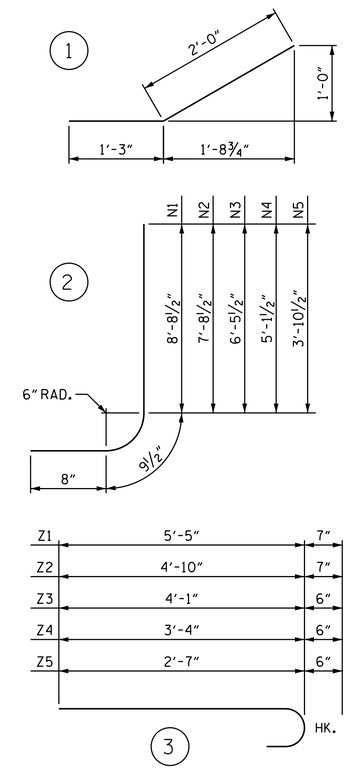

NOTE: A 3 FOOT STRIP OF FILTER FABRIC SHALL BE ATTACHED TO THE FILL FACE OF THE WING COVERING THE ENTIRE LENGTH OF THE EXPANSION JOINT.

BILL OF MATERIAL

BAR	NO.	SIZE	TYPE	LENGTH	WEIGHT
H1	12	#4	STR	10'-10"	87
H2	4	#4	STR	7'-8"	20
H3	4	#4	STR	4'-1"	11
H4	24	#4	1	3'-3"	52
H5	4	#4	STR	11'-9"	31
N1	4	#5	2	10'-2"	42
N2	6	#5	2	9'-2"	57
N3	6	#4	2	7'-11"	32
N4	6	#4	2	6'-7"	26
N5	6	#4	2	5'-4"	21
S1	6	#6	STR	6'-0"	54
T1	6	#5	STR	12'-9"	80
V1	4	#4	STR	8'-1"	22
V2	6	#4	STR	7'-1"	28
V3	6	#4	STR	5'-10"	23
V4	6	#4	STR	4'-7"	18
V5	6	#4	STR	3'-4"	13
Z1	4	#5	3	6'-0"	25
Z2	6	#5	3	5'-5"	34
Z3	6	#4	3	4'-7"	18
Z4	6	#4	3	3'-10"	15
Z5	6	#4	3	3'-1"	12

REINFORCING STEEL
FOR 2 WINGS 721 LBS.

CLASS A CONCRETE
2 WINGS 10.7 C.Y.
1 HEADWALL 1.2 C.Y.
1 END CURTAIN WALL 1.5 C.Y.
2 EDGE BEAMS 2.1 C.Y.
TOTAL 15.5 C.Y.

PROJECT NO. R-2519B
MITCHELL COUNTY
STATION: 319+76.16 -L-

SHEET 12 OF 13

STATE OF NORTH CAROLINA
DEPARTMENT OF TRANSPORTATION
RALEIGH

WINGS FOR CONCRETE BOX CULVERT RIGHT EXTENSION

H = 8'-0" SLOPE = 2:1

NORTH CAROLINA PROFESSIONAL SEAL 20125 ENGINEER MARSHALL C. CHEEK, JR.
DocuSigned by: Marshall C. Cheek, Jr.
8/27/2014
6549D0EBAA3B405...

REVISIONS						SHEET NO.
NO.	BY:	DATE:	NO.	BY:	DATE:	C-52
1			3			TOTAL SHEETS
2			4			87

STR#10

ASSEMBLED BY : M.A. LEBLANC DATE : 10/13
CHECKED BY : B.C. HUNT DATE : 10/13
DRAWN BY : CCJ 10/99
CHECKED BY : RWW 03/00