BAR TYPE

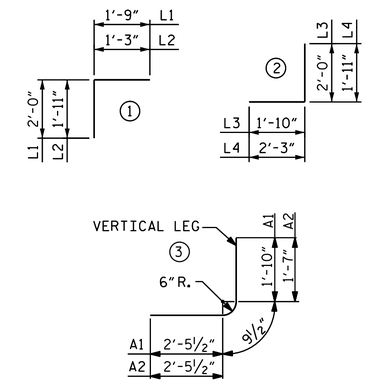

BAR DIMENSIONS ARE OUT TO OUT

SPLICE LENGTH CHART

BAR	SIZE	LENGTH
B1	#4	1'-11"

BAR SCHEDULE

BAR	NO.	SIZE	TYPE	LENGTH	WEIGHT
A1	44	#5	3	5'-1"	233
A2	88	#4	3	4'-10"	284
A100	29	#4	STR	7'-11"	153
A101	6	#4	STR	6'-2"	25
A102	6	#4	STR	4'-5"	18
A103	6	#4	STR	2'-8"	11
A200	29	#5	STR	7'-11"	239
A201	6	#5	STR	6'-2"	39
A202	6	#5	STR	4'-5"	28
A203	6	#5	STR	2'-8"	17
B1	44	#4	STR	7'-10"	230
B2	44	#5	STR	6'-4"	291
C1	34	#4	STR	21'-3"	483
D1	12	#6	STR	2'-6"	45
D2	4	#6	STR	2'-3"	14
D3	4	#6	STR	1'-3"	8
E1	16	#5	STR	5'-9"	96
G1	2	#4	STR	10'-7"	14
H1	4	#4	STR	10'-7"	28
L1	6	#6	1	3'-9"	34
L2	5	#6	1	3'-2"	24
L3	6	#6	2	3'-10"	35
L4	5	#6	2	4'-2"	31
S2	9	#8	STR	10'-7"	254
REINFORCING STEEL				= 2634	LBS.

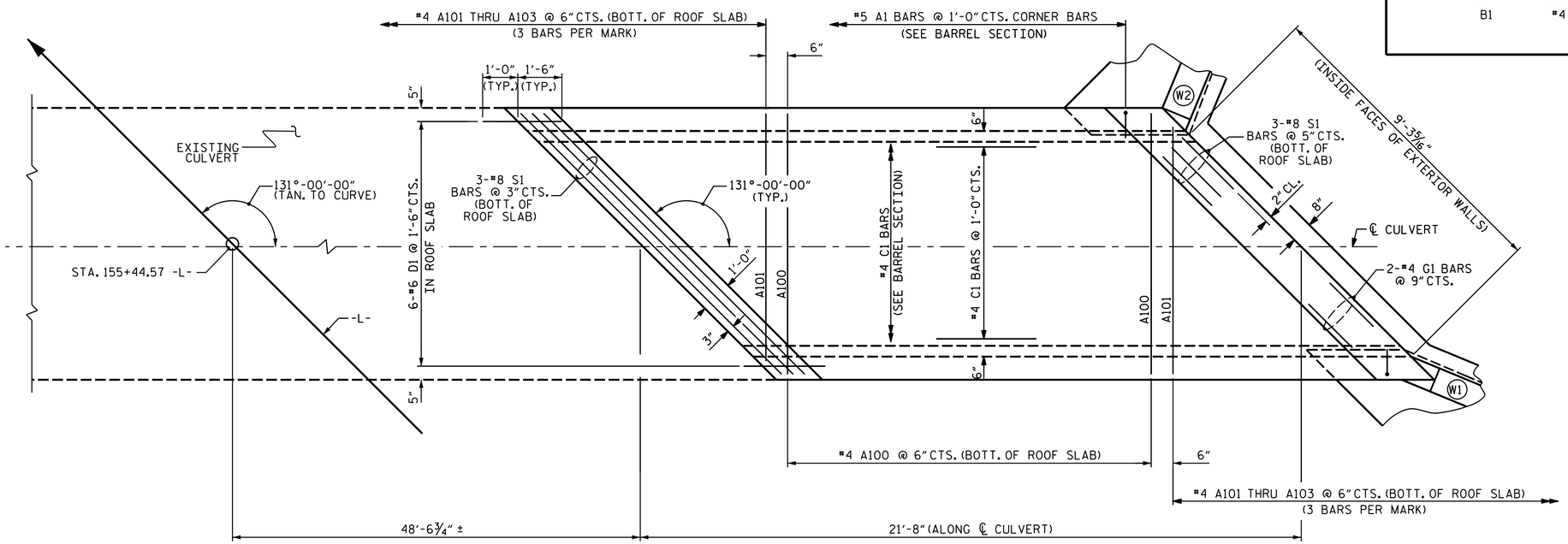

PLAN - ROOF SLAB

PROJECT NO. R-2519B
YANCEY COUNTY
STATION: 155+44.57 -L-

SHEET 9 OF 11

STATE OF NORTH CAROLINA
DEPARTMENT OF TRANSPORTATION
RALEIGH

SINGLE 7 FT. X 7 FT. CONCRETE BOX CULVERT RIGHT EXTENSION

REVISIONS						SHEET NO.
NO.	BY:	DATE:	NO.	BY:	DATE:	C-38
1			3			TOTAL SHEETS
2			4			87

STR. #9

NORTH CAROLINA PROFESSIONAL SEAL 20125 ENGINEER MARSHALL G. CHEEK, JR.

8/27/2014 Marshall G. Cheek, Jr.
6549D6EBAA3B405...

ASSEMBLED BY : A. SORSENGINH/JRM DATE : 5/2013
CHECKED BY : H. KIM/WJH DATE : 7/2013
DESIGN ENG. OF RECORD: M.A. LEBLANC DATE : 10/2013

REVISED 8-28-92 BY E.L.R. CHECKED BY G.R.P.
REVISED 8-22-89 BY A.R.B. CHECKED BY C.R.K.
REDRAWN 8-22-89
REVISED 11-19-99 BY M.M. CHECKED BY R.W.W.