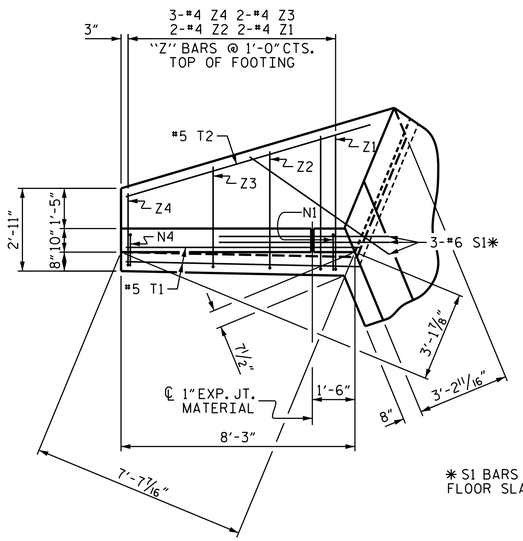

PLAN W2

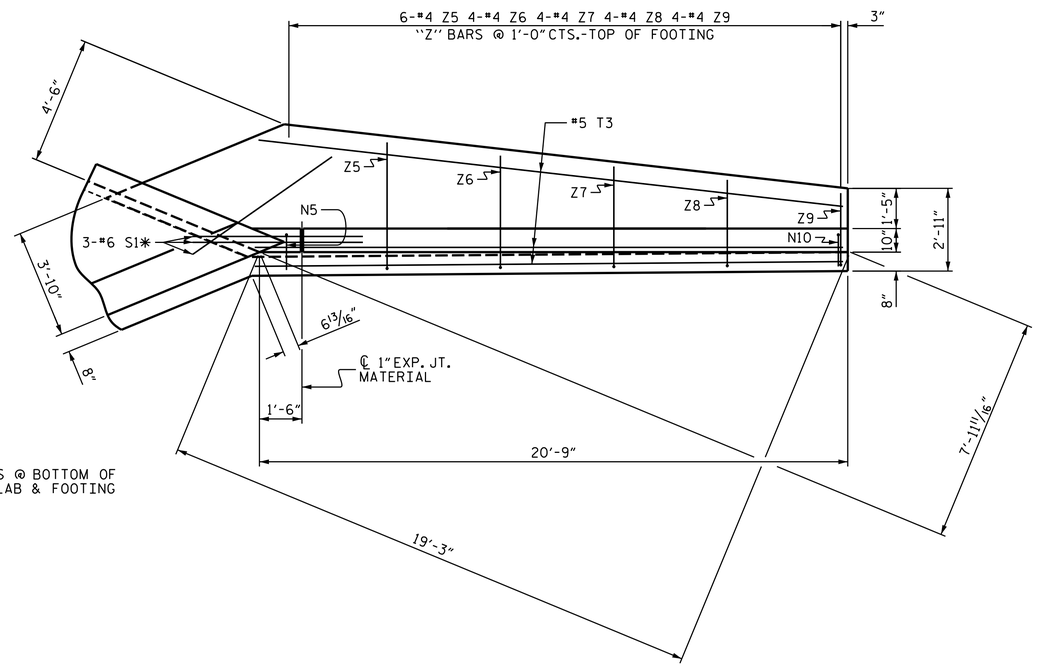

PLAN W1

* S1 BARS @ BOTTOM OF FLOOR SLAB & FOOTING

NOTE:

A 3 FOOT STRIP OF FILTER FABRIC SHALL BE ATTACHED TO THE FILL FACE OF THE WING COVERING THE ENTIRE LENGTH OF THE EXPANSION JOINT.

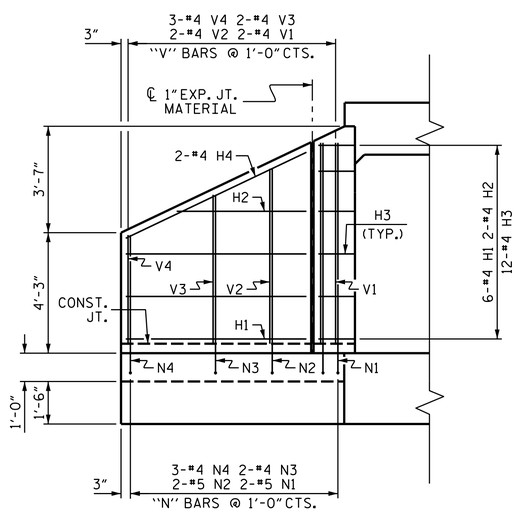

ELEVATION W2

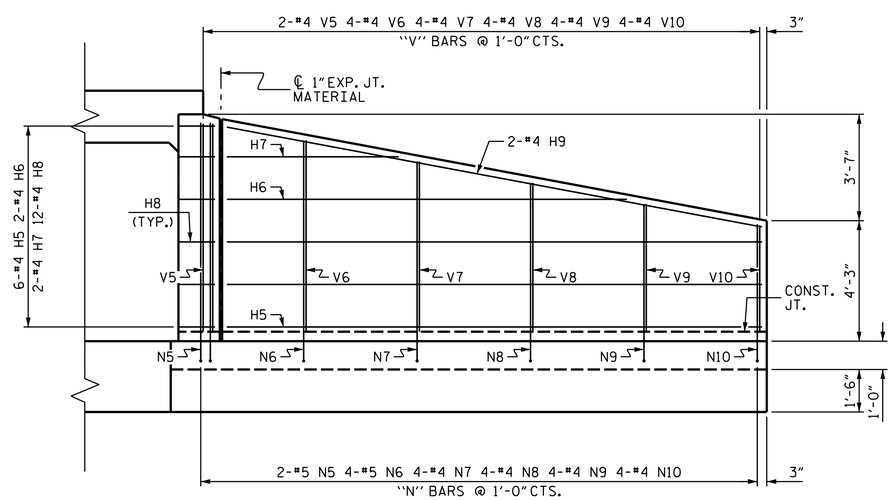

ELEVATION W1

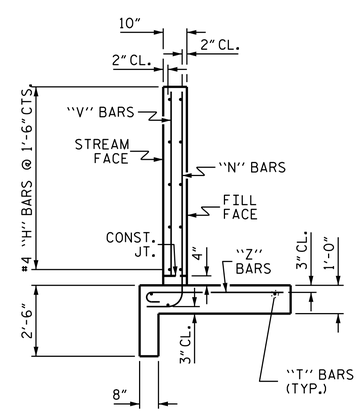

TYPICAL WING SECTION

BAR TYPES

ALL BAR DIMENSIONS ARE OUT TO OUT.

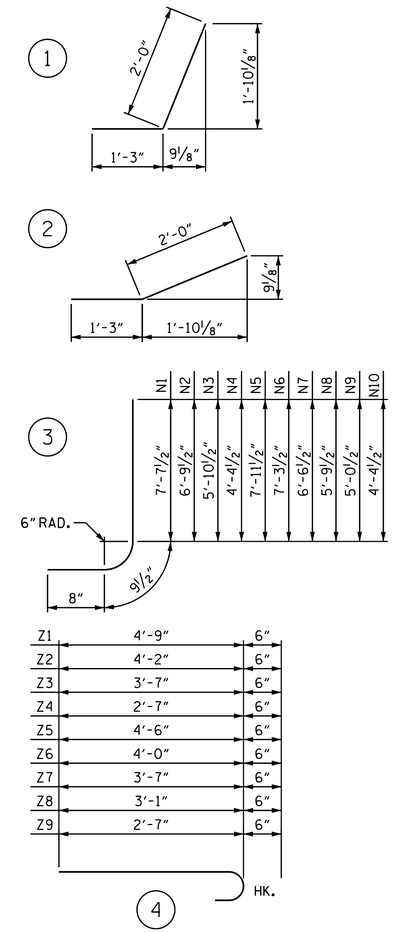

BAR SCHEDULE

BAR	NO.	SIZE	TYPE	LENGTH	WEIGHT
H1	6	#4	STR	6'-4"	25
H2	2	#4	STR	4'-6"	6
H3	12	#4	1	3'-3"	26
H4	2	#4	STR	7'-0"	9
H5	6	#4	STR	18'-10"	75
H6	2	#4	STR	14'-1"	19
H7	2	#4	STR	6'-0"	8
H8	12	#4	2	3'-3"	26
H9	2	#4	STR	19'-2"	26
N1	2	#5	3	9'-1"	19
N2	2	#5	3	8'-3"	17
N3	2	#4	3	7'-4"	10
N4	3	#4	3	5'-7"	11
N5	2	#5	3	9'-5"	20
N6	4	#5	3	8'-9"	37
N7	4	#4	3	8'-0"	21
N8	4	#4	3	7'-3"	19
N9	4	#4	3	6'-6"	17
N10	4	#4	3	5'-10"	16
S1	6	#6	STR	6'-0"	54
T1	2	#5	STR	8'-3"	17
T2	1	#5	STR	9'-0"	9
T3	3	#5	STR	20'-9"	65
V1	2	#4	STR	7'-1"	9
V2	2	#4	STR	6'-2"	8
V3	2	#4	STR	5'-3"	7
V4	3	#4	STR	3'-9"	8
V5	2	#4	STR	7'-4"	10
V6	4	#4	STR	6'-9"	18
V7	4	#4	STR	6'-0"	16
V8	4	#4	STR	5'-3"	14
V9	4	#4	STR	4'-6"	12
V10	4	#4	STR	3'-9"	10
Z1	2	#4	4	5'-3"	7
Z2	2	#4	4	4'-8"	6
Z3	2	#4	4	4'-1"	5
Z4	3	#4	4	3'-1"	6
Z5	6	#4	4	5'-0"	20
Z6	4	#4	4	4'-6"	12
Z7	4	#4	4	4'-1"	11
Z8	4	#4	4	3'-7"	10
Z9	4	#4	4	3'-1"	8

REINFORCING STEEL FOR 2 WINGS 749 LBS.

CLASS A CONCRETE	
2 WINGS	11.8 C.Y.
1 HEADWALL	0.5 C.Y.
1 END CURTAIN WALL	0.5 C.Y.
2 EDGE BEAMS	1.6 C.Y.
TOTAL	14.4 C.Y.

PROJECT NO. R-2519B
YANCEY COUNTY
STATION: 155+44.57 -L-

SHEET 10 OF 11

STATE OF NORTH CAROLINA
DEPARTMENT OF TRANSPORTATION
RALEIGH

WINGS FOR CONCRETE BOX CULVERT RIGHT EXTENSION

H = 7'-0" SLOPE = 2:1

NORTH CAROLINA PROFESSIONAL SEAL 20125 ENGINEER MARSHALL G. CHEEK, JR.
DocuSigned by: Marshall G. Cheek, Jr.
8/27/2014
6549D6EBAA3B405...

ASSEMBLED BY : A. SORSENGINH	DATE : 8/2011
CHECKED BY : H. KIM	DATE : 8/2011
DRAWN BY : CCJ 01/00	
CHECKED BY : RWW 03/00	

REVISIONS						SHEET NO.
NO.	BY:	DATE:	NO.	BY:	DATE:	C-39
1			3			TOTAL SHEETS
2			4			87

STR. #9

STD. NO. CW4507