$$$$$$SYSTIME$$$$$
$$$$$$$$$$$$$$$$$$$$$$$$$$DGN$$$$$$$$$$$$$$$$$$$$$$$$
$$$$USERNAME$$$$

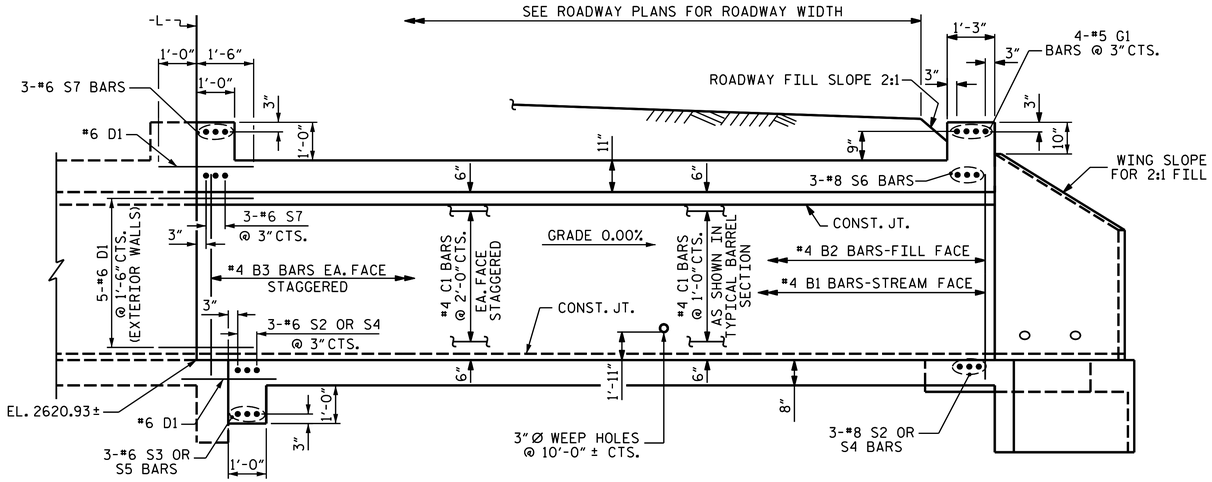

INTERIOR WALL

EXTERIOR WALL

CULVERT SECTION NORMAL TO ROADWAY

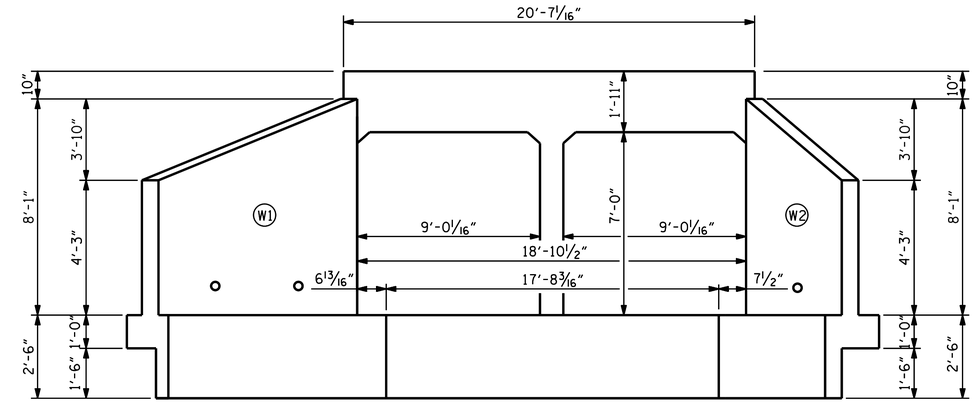

OUTLET END ELEVATION NORMAL TO SKEW

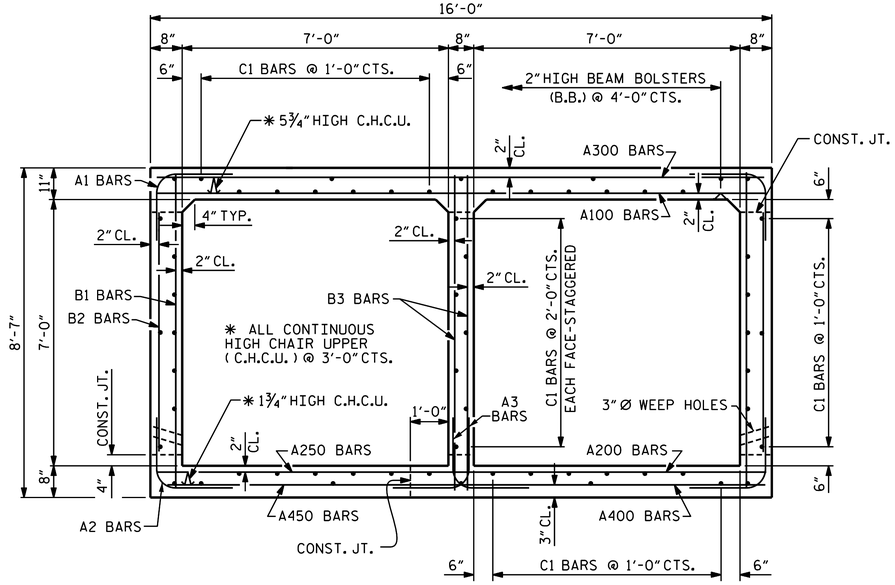

RIGHT ANGLE SECTION OF BARREL

THERE ARE 61 C1 BARS IN SECTION OF BARREL.
(LOOKING UPSTREAM)

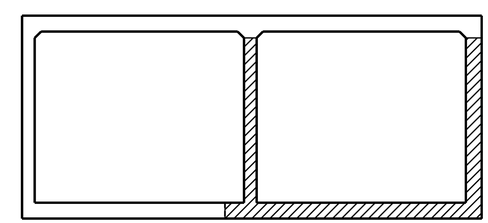

CONSTRUCTION PHASING

(LOOKING UPSTREAM)

PHASE I CONSTRUCTION

PHASE II CONSTRUCTION

PROJECT NO. R-2519B

MITCHELL COUNTY

STATION: 327+50.47 -L-

SHEET 2 OF 7

STATE OF NORTH CAROLINA
DEPARTMENT OF TRANSPORTATION
RALEIGH

DOUBLE 7 FT. X 7 FT. CONCRETE BOX CULVERT RIGHT EXTENSION

REVISIONS						SHEET NO.
NO.	BY:	DATE:	NO.	BY:	DATE:	C-66
1			3			TOTAL SHEETS
2			4			87

NORTH CAROLINA PROFESSIONAL SEAL 20125 ENGINEER MARSHALL C. CHEEK, JR.

8/27/2014 Marshall C. Cheek, Jr.

DRAWN BY : M.A. LEBLANC DATE : 9/13
CHECKED BY : V. NGUYEN DATE : 10/13
DESIGN ENGINEER OF RECORD: J.R. MCROY DATE : 10/13

STR. #12