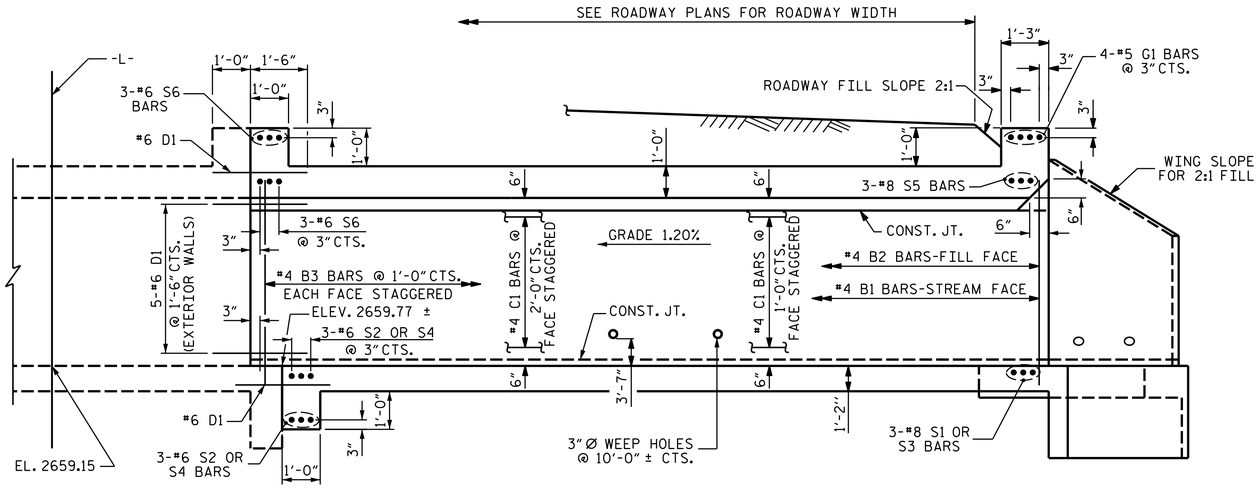

CULVERT SECTION NORMAL TO ROADWAY

SPLICE LENGTH CHART		
BAR	SIZE	LENGTH
A200	#4	1'-9"
A400	#5	2'-2"
B1	#4	1'-9"
B3	#4	1'-9"
C1	#4	1'-11"
'S'	#8	4'-11"
'S'	#6	2'-9"

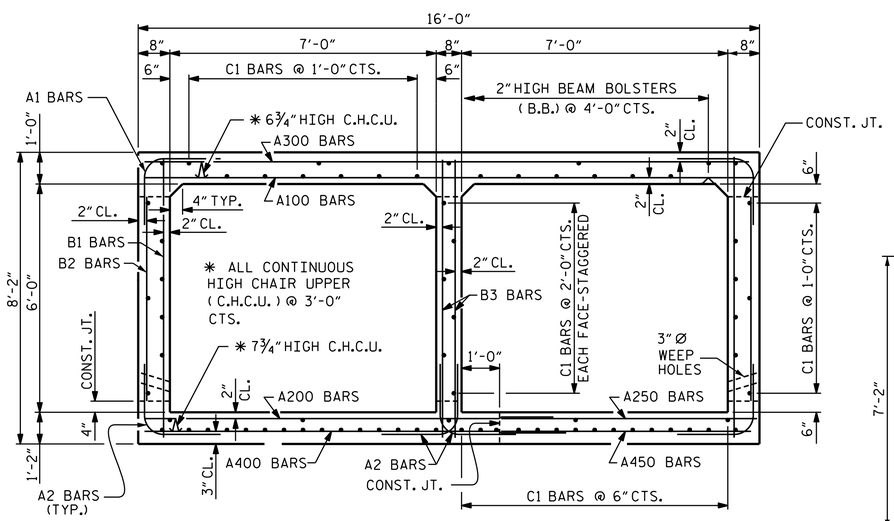

RIGHT ANGLE SECTION OF BARREL

THERE ARE 74 C1 BARS IN SECTION OF BARREL.
(LOOKING DOWNSTREAM)

BAR TYPE

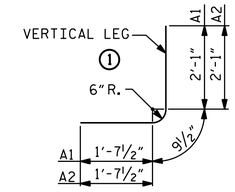

BAR DIMENSIONS ARE OUT TO OUT

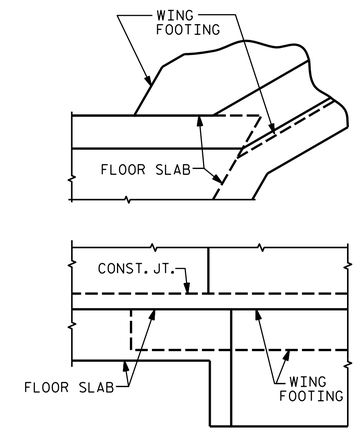

DETAIL

CONNECTION OF WING FOOTING AND FLOOR SLAB WHEN SLAB IS THICKER THAN FOOTING

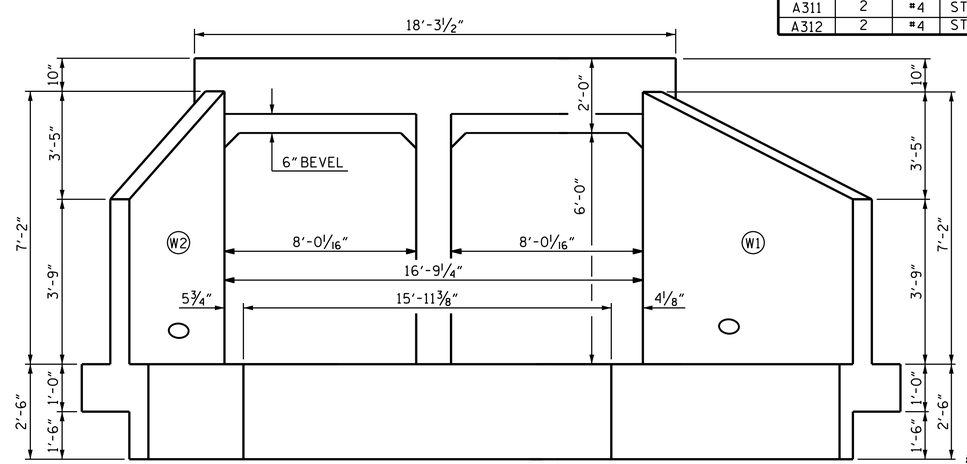

INLET END ELEVATION NORMAL TO SKEW

BAR SCHEDULE

BAR	NO.	SIZE	TYPE	LENGTH	WEIGHT	BAR	NO.	SIZE	TYPE	LENGTH	WEIGHT
A1	130	#4	1	4'-6"	391	A313	2	#4	STR	4'-2"	6
A2	260	#4	1	4'-6"	782	A314	2	#4	STR	3'-3"	4
						A315	2	#4	STR	2'-4"	3
A100	90	#4	STR	15'-8"	942						
A101	2	#4	STR	14'-9"	20	A400	117	#5	STR	11'-6"	1403
A102	2	#4	STR	13'-7"	18	A401	1	#5	STR	10'-7"	11
A103	2	#4	STR	12'-6"	17	A402	1	#5	STR	9'-8"	10
A104	2	#4	STR	11'-4"	15	A403	1	#5	STR	8'-9"	9
A105	2	#4	STR	10'-3"	14	A404	1	#5	STR	7'-10"	8
A106	2	#4	STR	9'-1"	12	A405	1	#5	STR	6'-11"	7
A107	2	#4	STR	7'-11"	11	A406	1	#5	STR	6'-1"	6
A108	2	#4	STR	6'-10"	9	A407	1	#5	STR	5'-2"	5
A109	2	#4	STR	5'-9"	8	A408	1	#5	STR	4'-3"	4
A110	2	#4	STR	4'-7"	6	A409	1	#5	STR	3'-4"	3
A111	2	#4	STR	3'-5"	5	A410	1	#5	STR	2'-5"	3
A112	2	#4	STR	2'-4"	3	A411	1	#5	STR	11'-1"	12
						A412	1	#5	STR	10'-3"	11
A200	88	#4	STR	11'-1"	652	A413	1	#5	STR	9'-4"	10
A201	1	#4	STR	10'-2"	7	A414	1	#5	STR	8'-5"	9
A202	1	#4	STR	9'-0"	6	A415	1	#5	STR	7'-6"	8
A203	1	#4	STR	7'-7"	5	A416	1	#5	STR	6'-7"	7
A204	1	#4	STR	6'-4"	4	A417	1	#5	STR	5'-9"	6
A205	1	#4	STR	5'-2"	3	A418	1	#5	STR	4'-10"	5
A206	1	#4	STR	3'-11"	3	A419	1	#5	STR	3'-11"	4
A207	1	#4	STR	2'-9"	2	A420	1	#5	STR	3'-5"	4
A208	1	#4	STR	10'-7"	7						
A209	1	#4	STR	9'-4"	6	A450	122	#5	STR	6'-4"	806
A210	1	#4	STR	8'-2"	5	A451	1	#5	STR	5'-9"	6
A211	1	#4	STR	7'-0"	5	A452	1	#5	STR	4'-10"	5
A212	1	#4	STR	5'-9"	4	A453	1	#5	STR	3'-11"	4
A213	1	#4	STR	4'-7"	3	A454	1	#5	STR	3'-0"	3
A214	1	#4	STR	3'-4"	2	A455	1	#5	STR	2'-3"	2
						A456	1	#5	STR	6'-0"	6
						A457	1	#5	STR	5'-1"	5
A250	92	#4	STR	6'-4"	389	A458	1	#5	STR	4'-2"	4
A251	1	#4	STR	5'-3"	4	A459	1	#5	STR	3'-3"	3
A252	1	#4	STR	4'-0"	3	A460	1	#5	STR	2'-5"	3
A253	1	#4	STR	2'-10"	2						
A254	1	#4	STR	5'-9"	4	B1	130	#4	STR	7'-8"	666
A255	1	#4	STR	4'-6"	3	B2	130	#4	STR	5'-4"	463
A256	1	#4	STR	3'-4"	2	B3	130	#4	STR	7'-8"	666
A300	112	#4	STR	15'-8"	1172	C1	222	#4	STR	23'-0"	3411
A301	2	#4	STR	15'-0"	20						
A302	2	#4	STR	14'-1"	19	D1	32	#6	STR	2'-6"	120
A303	2	#4	STR	13'-2"	18						
A304	2	#4	STR	12'-3"	16	G1	4	#5	STR	17'-10"	74
A305	2	#4	STR	11'-4"	15						
A306	2	#4	STR	10'-6"	14	S1	3	#8	STR	15'-5"	123
A307	2	#4	STR	9'-7"	13	S2	6	#6	STR	13'-3"	119
A308	2	#4	STR	8'-8"	12	S3	3	#8	STR	7'-2"	57
A309	2	#4	STR	7'-9"	10	S4	6	#6	STR	7'-2"	65
A310	2	#4	STR	6'-10"	9	S5	3	#8	STR	17'-10"	143
A311	2	#4	STR	6'-0"	8	S6	6	#6	STR	17'-10"	161
A312	2	#4	STR	5'-1"	7						

REINFORCING STEEL = 13,180 LBS.

PROJECT NO. R-2519B
MITCHELL COUNTY
STATION: 345+98.42 -L-

SHEET 2 OF 6

STATE OF NORTH CAROLINA
DEPARTMENT OF TRANSPORTATION
RALEIGH

DOUBLE 7 FT. X 6 FT. CONCRETE BOX CULVERT RIGHT EXTENSION

REVISIONS						SHEET NO.
NO.	BY:	DATE:	NO.	BY:	DATE:	C-73
1			3			TOTAL SHEETS
2			4			87

DRAWN BY : A. SORSENGINH DATE : 7/12/11
CHECKED BY : M. POOLE DATE : 7/2011
DESIGN ENGINEER OF RECORD: M. A. LEBLANC DATE : 10/2013

NORTH CAROLINA PROFESSIONAL SEAL 20125 ENGINEER MARSHALL G. CHEEK, JR.

8/27/2014 DocuSigned by: Marshall G. Cheek, Jr. 6549D6EBAA3B405...

STR. #13