$$$$$$SYSTIME$$$$$
$$$$$$$$$$$$$$$$$$$$$$$$$$DGN$$$$$$$$$$$$$$$$$$$$$$$$$
$$$$USERNAME$$$$

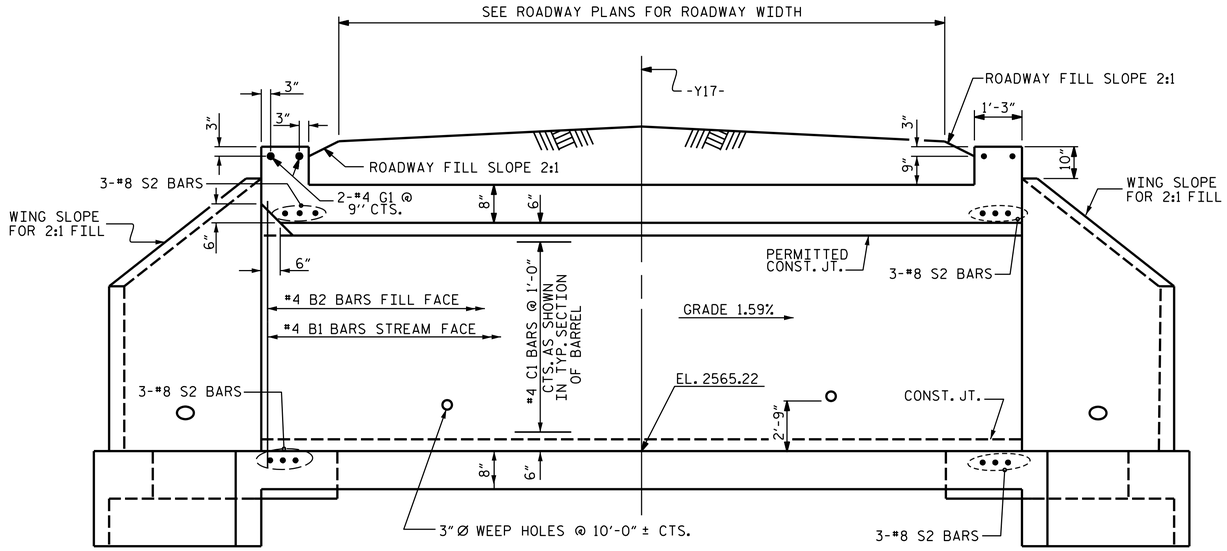

CULVERT SECTION NORMAL TO ROADWAY

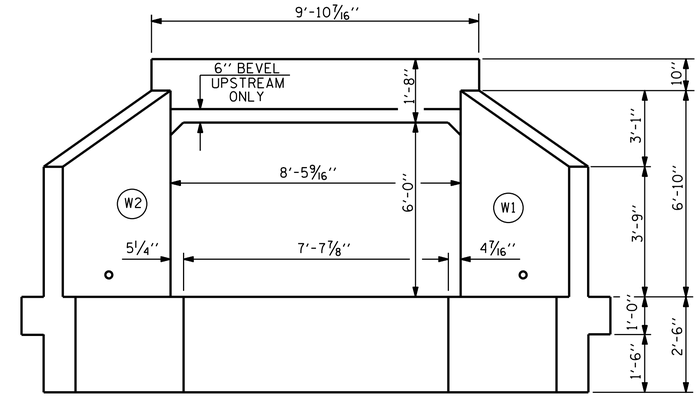

END ELEVATION NORMAL TO SKEW

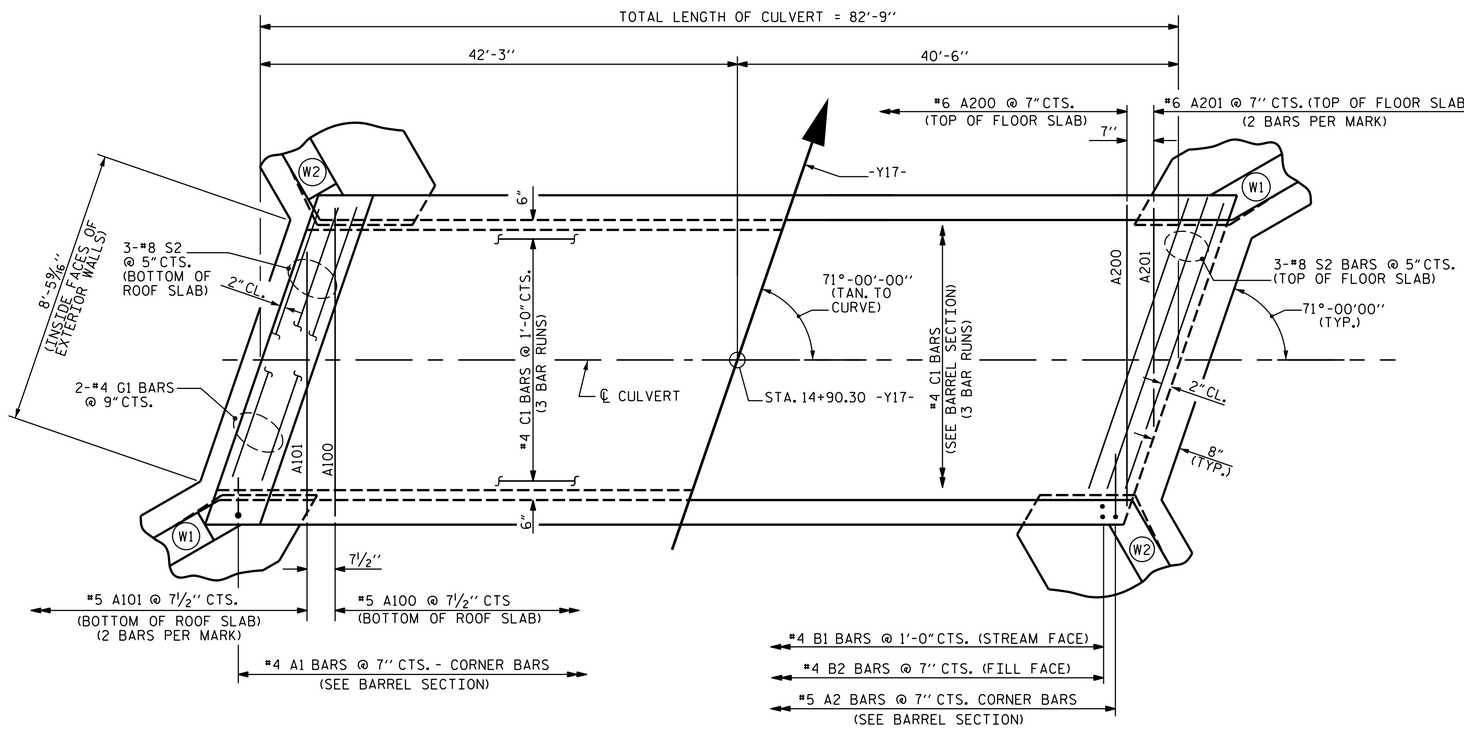

PART PLAN - ROOF SLAB

PART PLAN - FLOOR SLAB

NOTE : FOR S1 BARS IN FLOOR SLAB & WING FOOTINGS, SEE WING SHEET.

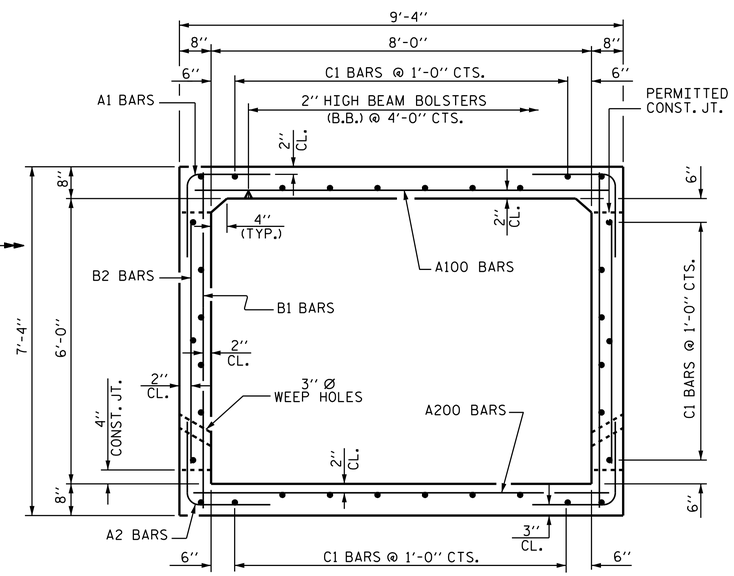

RIGHT ANGLE SECTION OF BARREL

THERE ARE 34 C1 BARS IN SECTION OF BARREL

PROJECT NO. R-2519B

YANCEY COUNTY

STATION: 14+90.30 -Y17-

SHEET 2 OF 5

STATE OF NORTH CAROLINA
DEPARTMENT OF TRANSPORTATION
RALEIGH

SINGLE 8 FT. X 6 FT. CONCRETE BOX CULVERT

DRAWN BY : M.E. POOLE	DATE : 8/2011				
CHECKED BY : S.W. PEARCE	DATE : 03/2013				
ENGINEER OF RECORD : M. A. LEBLANC	DATE : 10/2013				

NORTH CAROLINA PROFESSIONAL SEAL 20125 ENGINEER MARSHALL G. CHEEK, JR.

8/27/2014 Marshall G. Cheek, Jr.

REVISIONS						SHEET NO.
NO.	BY:	DATE:	NO.	BY:	DATE:	C-79
1			3			TOTAL SHEETS
2			4			87

STR #14