$$$$$$SYSTIME$$$$$
$$$$$$$$$$$$$$$$$$$$$$$$DGN$$$$$$$$$$$$$$$$$$$$$$$$
$$$$USERNAME$$$$

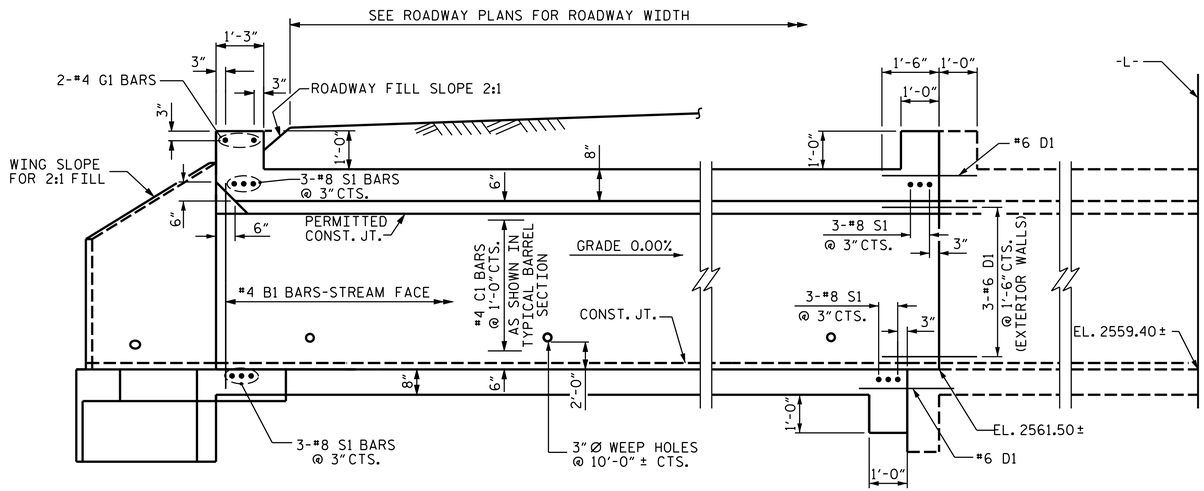

LEFT CULVERT EXTENSION SECTION NORMAL TO ROADWAY

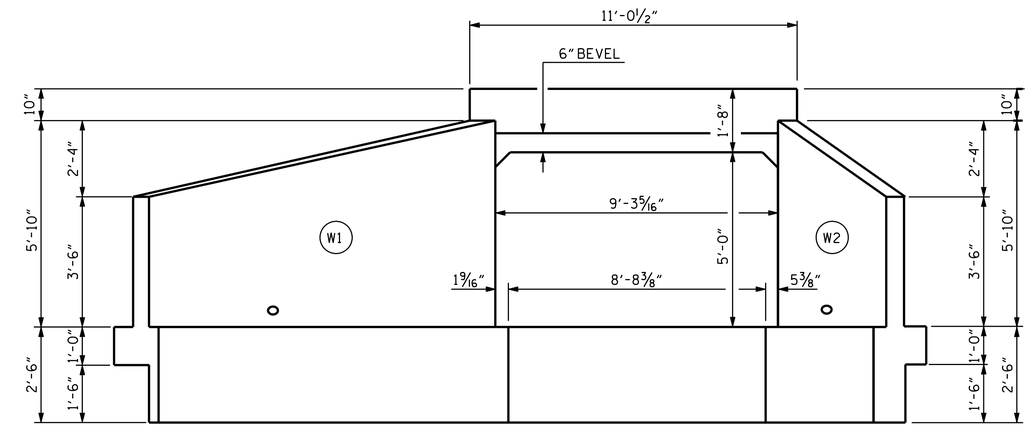

INLET END ELEVATION NORMAL TO SKEW

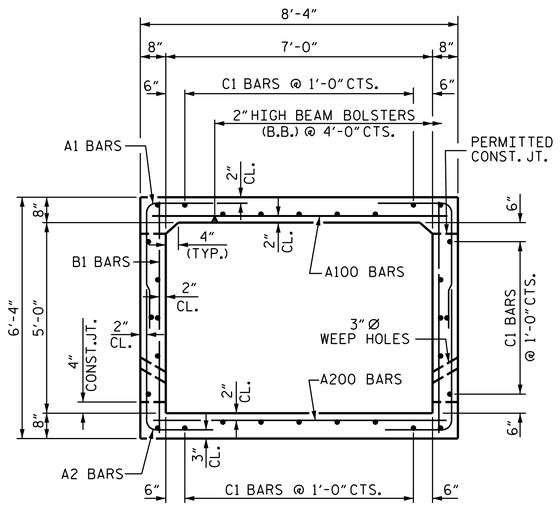

RIGHT ANGLE SECTION OF BARREL

THERE ARE 30 "C" BARS IN SECTION OF BARREL

LEFT EXTENSION QUANTITIES

CLASS A CONCRETE				
BARREL @	0.663	CY/FT	22.5	C.Y.
WINGS, ETC.			9.2	C.Y.
TOTAL			31.7	C.Y.
REINFORCING STEEL				
BARREL			3,170	LBS.
WINGS, ETC.			460	LBS.
TOTAL			3,630	LBS.
FOUNDATION CONDITIONING MATERIAL			20	TONS
CULVERT EXCAVATION			LUMP	SUM

PROJECT NO. R-2519B

YANCEY COUNTY

STATION: 155+44.57 -L-

SHEET 2 OF 11

STATE OF NORTH CAROLINA
DEPARTMENT OF TRANSPORTATION
RALEIGH

SINGLE 7 FT. X 5 FT. CONCRETE BOX CULVERT LEFT EXTENSION

NORTH CAROLINA PROFESSIONAL SEAL 20125 ENGINEER MARSHALL A. CHEEK, JR.

DocuSigned by: Marshall A. Cheek, Jr.
6549D6EBAA3B405...
8/27/2014

REVISIONS						SHEET NO.
NO.	BY:	DATE:	NO.	BY:	DATE:	C-31
1			3			TOTAL SHEETS
2			4			87

STR. #9

ASSEMBLED BY : A. SORSENGINH/JRM DATE : 5/2013
CHECKED BY : H. KIM/WJH DATE : 7/2013
DESIGN ENG. OF RECORD: M.A. LEBLANC DATE : 10/2013

REVISED 8-28-92 BY E.L.R. CHECKED BY C.R.P.
REVISED 8-22-89 BY A.R.B. CHECKED BY C.R.K.
REDRAWN 8-22-89
REVISED 11-19-99 BY M.M. CHECKED BY R.W.W.