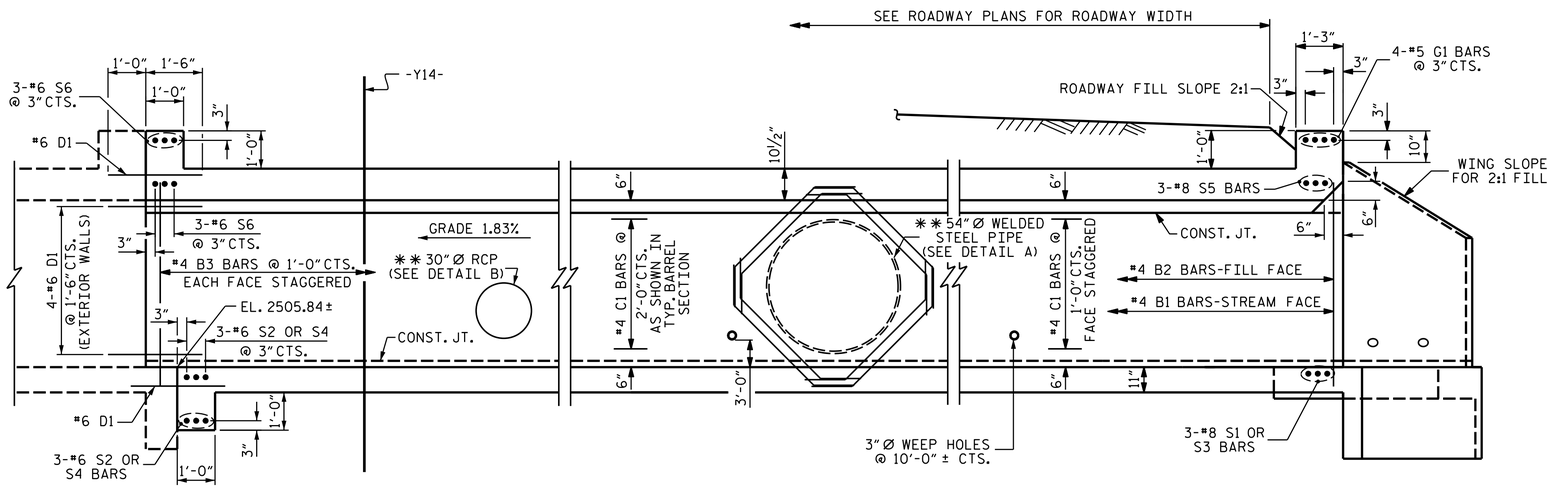

CULVERT SECTION NORMAL TO ROADWAY

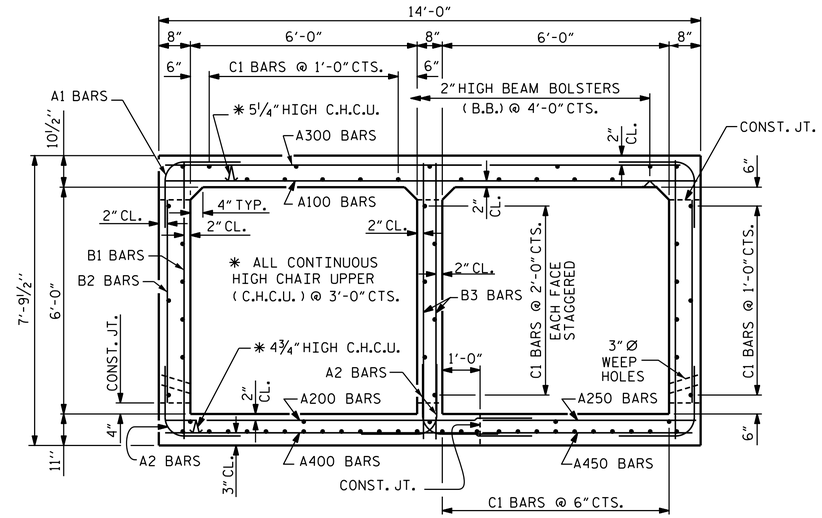

RIGHT ANGLE SECTION OF BARREL

THERE ARE 68 C1 BARS IN SECTION OF BARREL (LOOKING DOWNSTREAM)

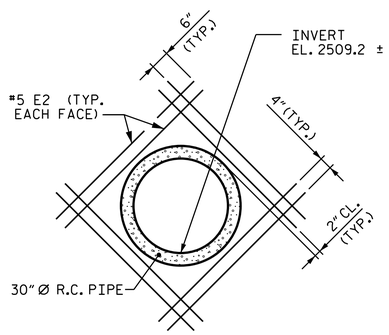

DETAIL B

** THE PIPE THROUGH THE WALL OF THE CULVERT WILL BE LOCATED BY THE ENGINEER. THE REINFORCING STEEL WILL BE CUT & FIELD BENT AS NECESSARY TO CLEAR THE PIPE.

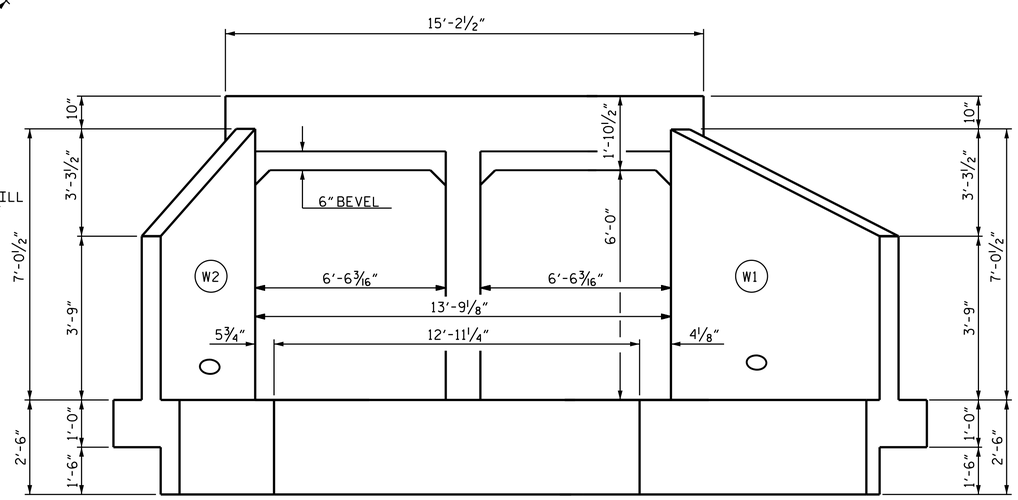

INLET END ELEVATION NORMAL TO SKEW

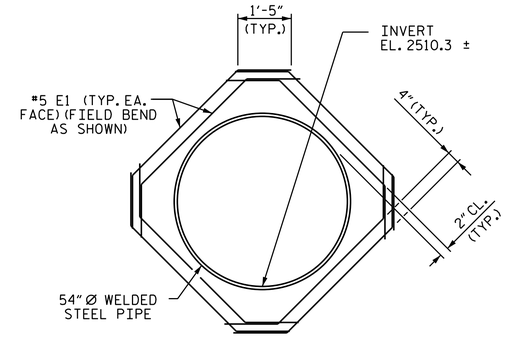

DETAIL A

** THE PIPE THROUGH THE WALL OF THE CULVERT WILL BE LOCATED BY THE ENGINEER. THE REINFORCING STEEL WILL BE CUT & FIELD BENT AS NECESSARY TO CLEAR THE PIPE.

PROJECT NO. R-2519B

YANCEY COUNTY

STATION: 134+80.45 -L-

SHEET 2 OF 12

STATE OF NORTH CAROLINA
DEPARTMENT OF TRANSPORTATION
RALEIGH

DOUBLE 6 FT. X 6 FT. CONCRETE BOX CULVERT
INLET EXTENSION

NORTH CAROLINA PROFESSIONAL SEAL 20125 ENGINEER MARSHALL C. CHEEK, JR.

DocuSigned by: Marshall C. Cheek, Jr.
6548DEBAA3B405...
8/27/2014

REVISIONS						SHEET NO.
NO.	BY:	DATE:	NO.	BY:	DATE:	C-19
1			3			TOTAL SHEETS
2			4			87

STR #8

DRAWN BY : A. SORSENGINH/MEP DATE : 9/2013
CHECKED BY : D. HODGE DATE : 10/13
DESIGN ENGINEER OF RECORD: M.A. LEBLANC DATE : 10/13

$$$$$$$SYSTIME$$$$$
$$$$$$$$$$$$$$$$$$$$$$$$DGN$$$$$$$$$$$$$$$$$$$$$$$$
$$$$USERNAME$$$$