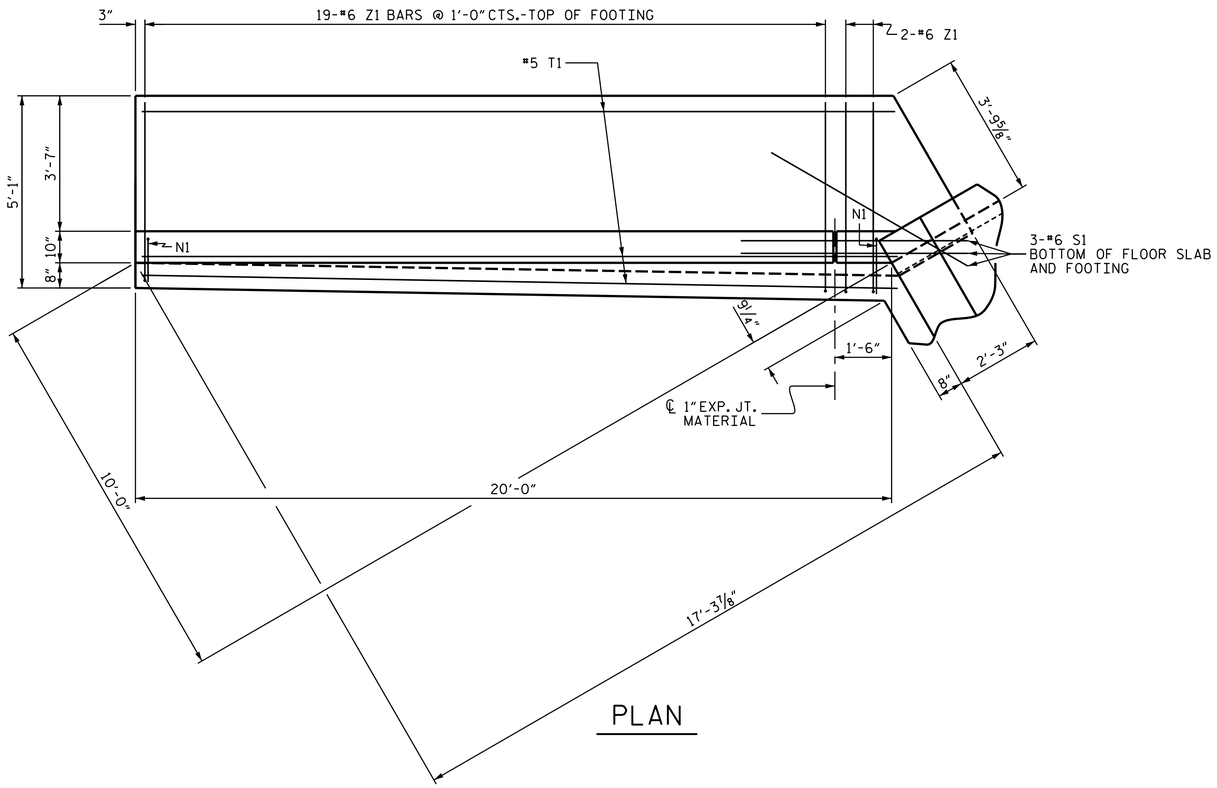

PLAN

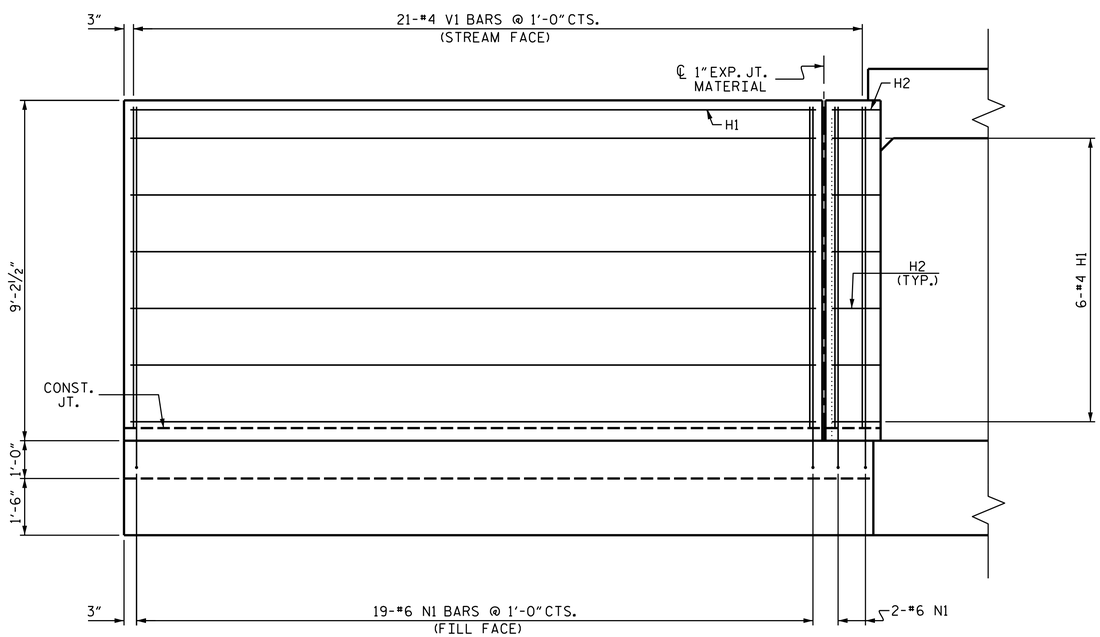

ELEVATION

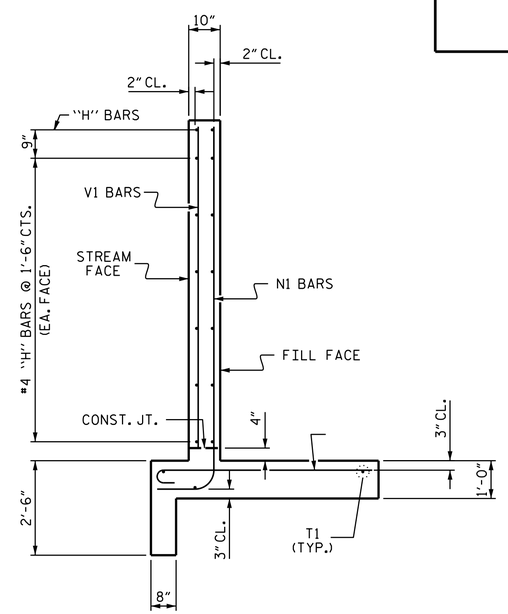

TYPICAL WING SECTION

BAR TYPES

ALL BAR DIMENSIONS ARE OUT TO OUT.

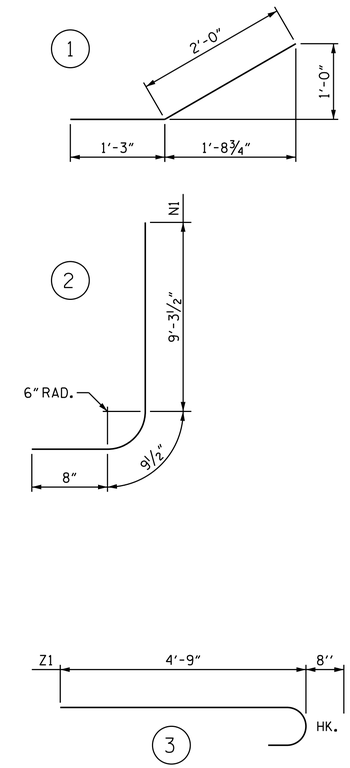

BILL OF MATERIAL

BAR	NO.	SIZE	TYPE	LENGTH	WEIGHT
H1	28	#4	STR	18'-1"	338
H2	28	#4	STR	3'-3"	61
N1	42	#6	2	10'-9"	678
S1	6	#6	STR	6'-0"	54
T1	6	#5	STR	20'-0"	125
V1	42	#5	STR	8'-8"	380
Z1	42	#6	3	5'-5"	342

REINFORCING STEEL
FOR 2 WINGS 1978 LBS.

CLASS A CONCRETE

2 WINGS	21.6 C.Y.
1 HEADWALL	0.8 C.Y.
1 END CURTAIN WALL	1.0 C.Y.
2 EDGE BEAMS	1.7 C.Y.
TOTAL	25.1 C.Y.

PROJECT NO. R-2519B
MITCHELL COUNTY
STATION: 323+58.66 -L-

SHEET 10 OF 11

STATE OF NORTH CAROLINA
DEPARTMENT OF TRANSPORTATION
RALEIGH

WINGS FOR CONCRETE BOX CULVERT STAGE I OR STAGE II

H = 8'-0"

NORTH CAROLINA PROFESSIONAL SEAL 20125 ENGINEER MARSHALL G. CHEEK, JR.

9/2/2014 DocuSign Envelope ID: 6549D6EBAA3B405... Marshall G. Cheek, Jr.

REVISIONS						SHEET NO.
NO.	BY:	DATE:	NO.	BY:	DATE:	C-63
1			3			TOTAL SHEETS
2			4			87

ASSEMBLED BY : W.J. HARRIS	DATE : 10/13
CHECKED BY : D. HODGE	DATE : 10/13
DESIGN ENGINEER OF RECORD : J. R. MCROY	DATE : 10/13

STR. #11