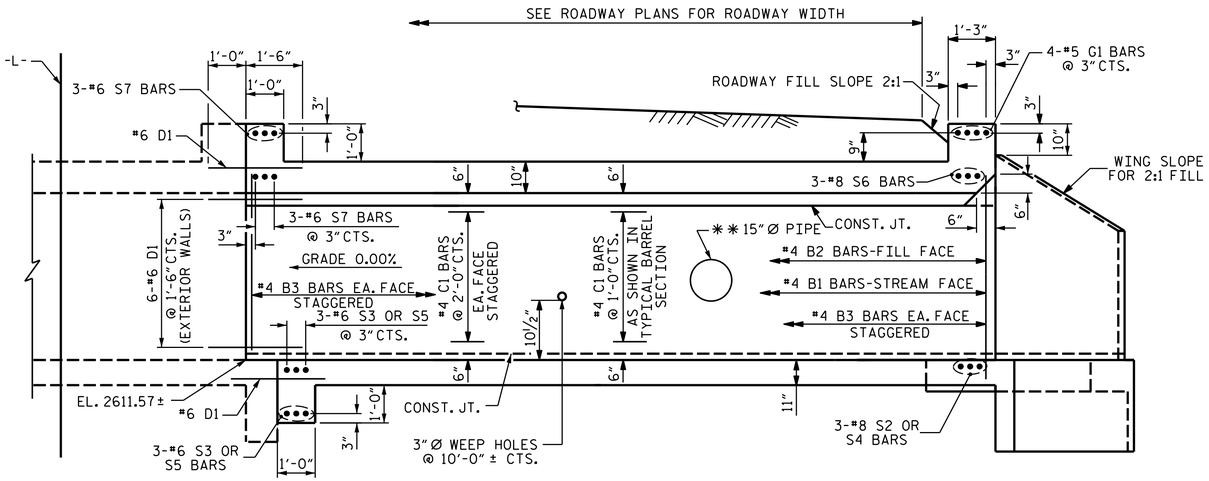

CULVERT SECTION NORMAL TO ROADWAY

** 15" Ø PIPE SHALL BE LOCATED BY THE ENGINEER

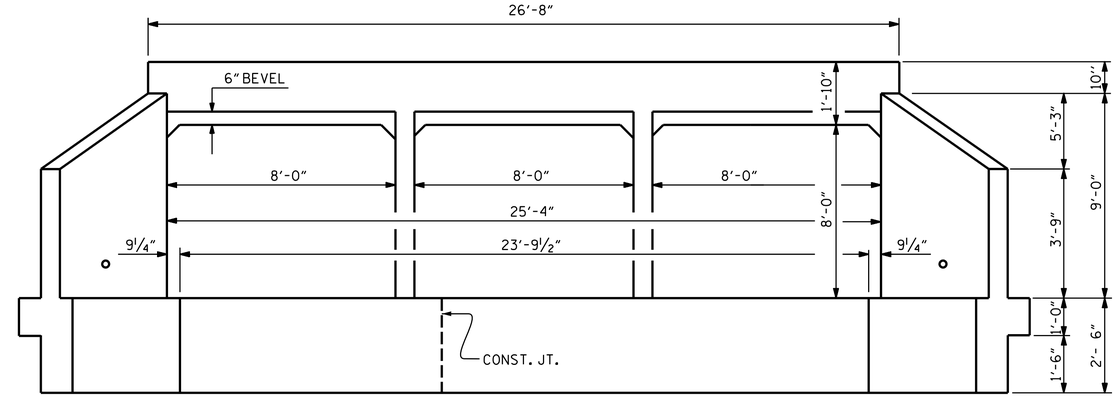

INLET END ELEVATION NORMAL TO SKEW

RIGHT EXTENSION QUANTITIES			
CLASS A CONCRETE			
BARREL @ 2.531 CY/FT	129.1	C.Y.	
WINGS, ETC.	15.5	C.Y.	
SILLS	0.6	C.Y.	
TOTAL	145.2	C.Y.	
REINFORCING STEEL			
BARREL, SILLS	17,363	LBS.	
WINGS, ETC.	721	LBS.	
TOTAL	18,084	LBS.	
FOUNDATION CONDITIONING MATERIAL	96	TONS	
CULVERT EXCAVATION	LUMP SUM		

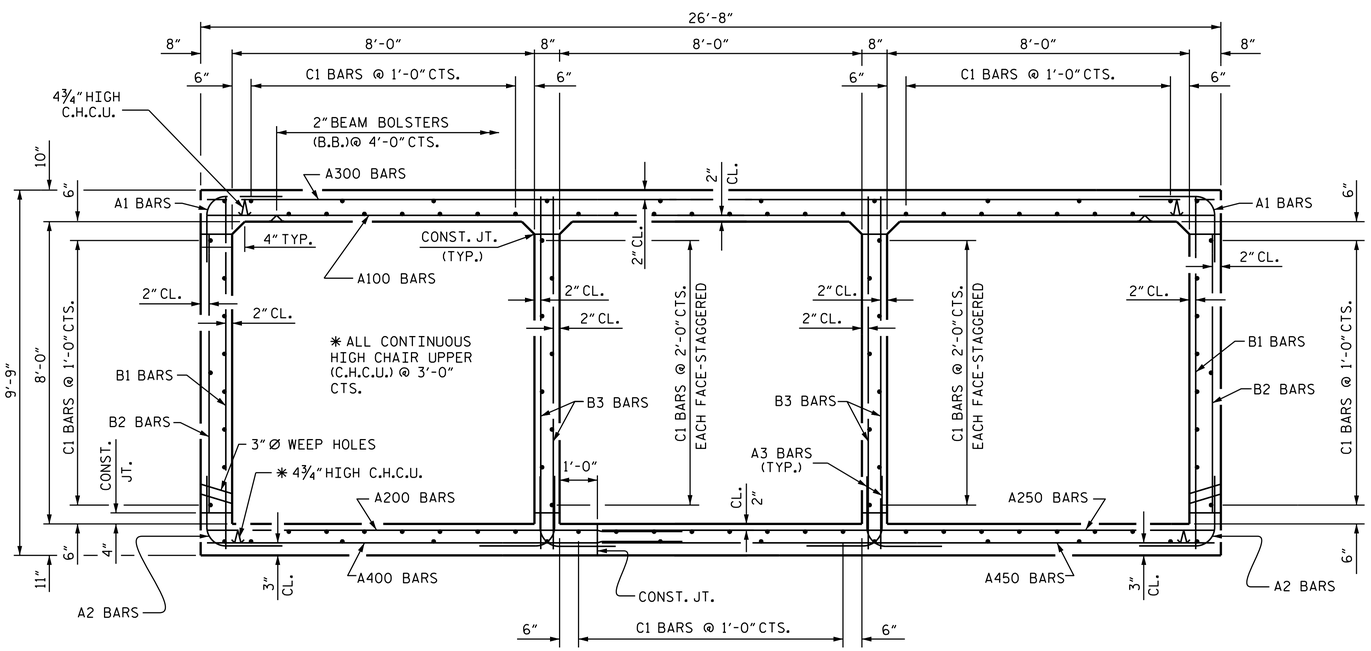

RIGHT ANGLE SECTION OF BARREL

THERE ARE 102 C1 BARS IN SECTION OF BARREL (LOOKING DOWNSTREAM)

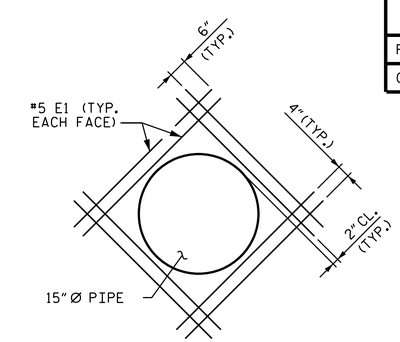

DETAIL OF REINFORCING AROUND 15" Ø PIPE

THE PIPE THROUGH THE WALL OF THE CULVERT SHALL BE LOCATED BY THE ENGINEER. THE REINFORCING STEEL SHALL BE FIELD BENT AS NECESSARY TO CLEAR THE PIPE.

PROJECT NO. R-2519B
MITCHELL COUNTY
STATION: 319+76.16 -L-

SHEET 8 OF 13

STATE OF NORTH CAROLINA
DEPARTMENT OF TRANSPORTATION
RALEIGH

TRIPLE 8 FT. X 8 FT. CONCRETE BOX CULVERT RIGHT EXTENSION

NORTH CAROLINA PROFESSIONAL SEAL 20125 ENGINEER MARSHALL C. CHEEK, JR.

8/27/2014 DocuSign Envelope ID: 6549D6EBAA3B405... Marshall C. Cheek, Jr.

REVISIONS							SHEET NO.
NO.	BY:	DATE:	NO.	BY:	DATE:		C-48
1			3				TOTAL SHEETS
2			4				87

STR#10

DRAWN BY :	M.A. LEBLANC	DATE :	10/13
CHECKED BY :	B.C. HUNT	DATE :	10/13
DESIGN ENGINEER OF RECORD:	J.R. MCROY	DATE :	10/13