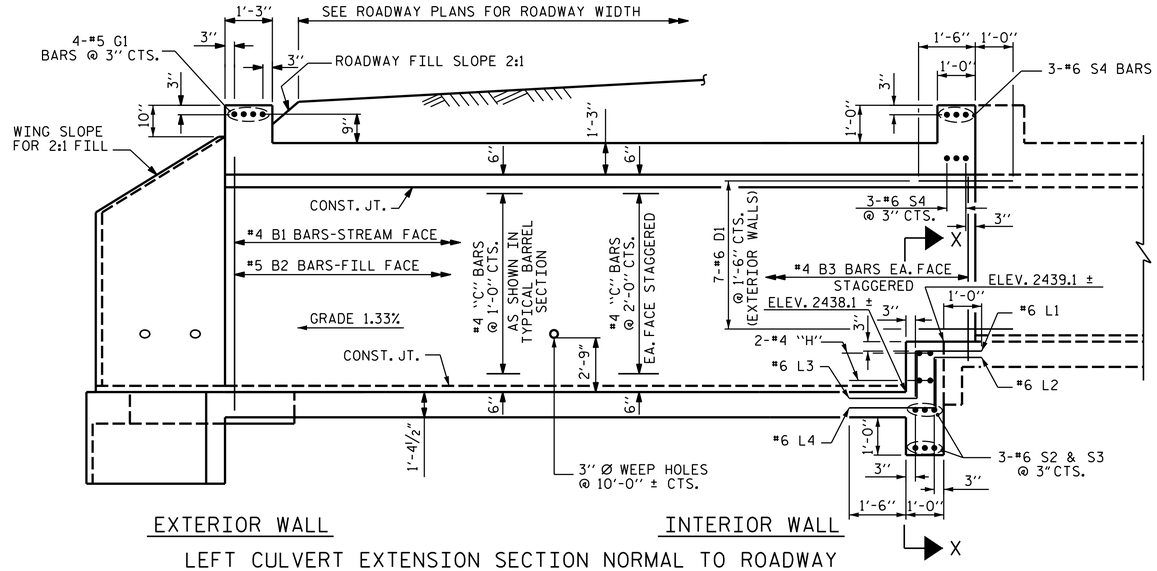

LEFT CULVERT EXTENSION SECTION NORMAL TO ROADWAY

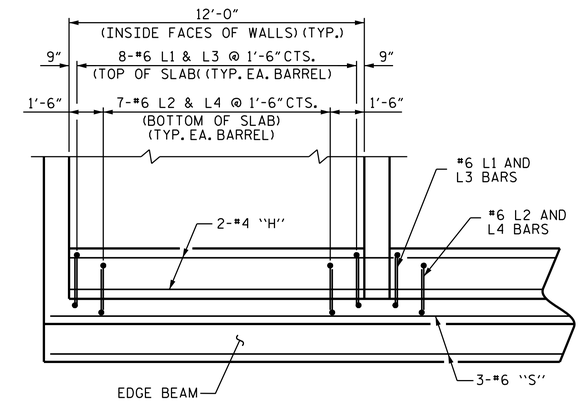

SECTION X-X

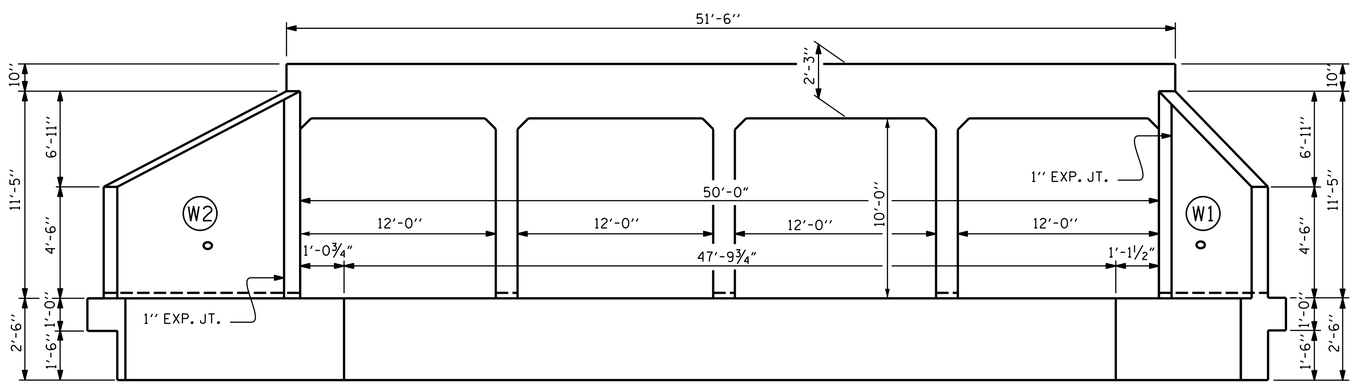

END ELEVATION NORMAL TO SKEW (LEFT EXTENSION)

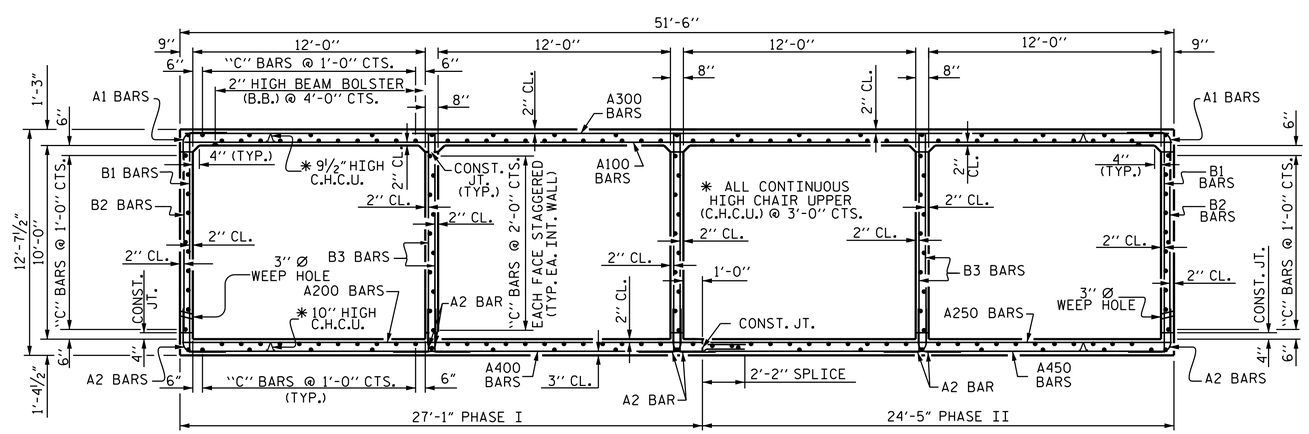

RIGHT ANGLE SECTION OF BARREL

THERE ARE 182 "C" BARS IN SECTION OF BARREL
(LOOKING UPSTREAM)

PROJECT NO. R-2519B
YANCEY COUNTY
STATION: 44+11.92 -L-

SHEET 3 OF 17

STATE OF NORTH CAROLINA
DEPARTMENT OF TRANSPORTATION
RALEIGH

QUADRUPLE
12 FT. x 10 FT.
CONCRETE BOX CULVERT
LEFT EXTENSION

REVISIONS						SHEET NO.
NO.	BY:	DATE:	NO.	BY:	DATE:	C-3
1			3			TOTAL SHEETS
2			4			87

NORTH CAROLINA PROFESSIONAL SEAL 20125 ENGINEER MARSHALL G. CHEEK, JR.
8/27/2014
DocuSigned by: Marshall G. Cheek, Jr.
6649D6EBAA3B405...

DRAWN BY :	M. POOLE/DAH	DATE :	8/13
CHECKED BY :	D. A. GLADDEN	DATE :	10/13
DESIGN ENGINEER OF RECORD:	J. R. MCROY	DATE :	10/13

STR.#7