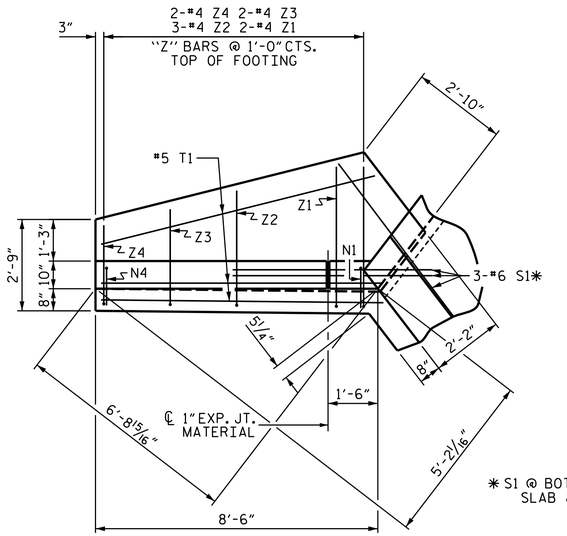

* S1 @ BOTTOM OF FLOOR SLAB & FOOTING

PLAN W2

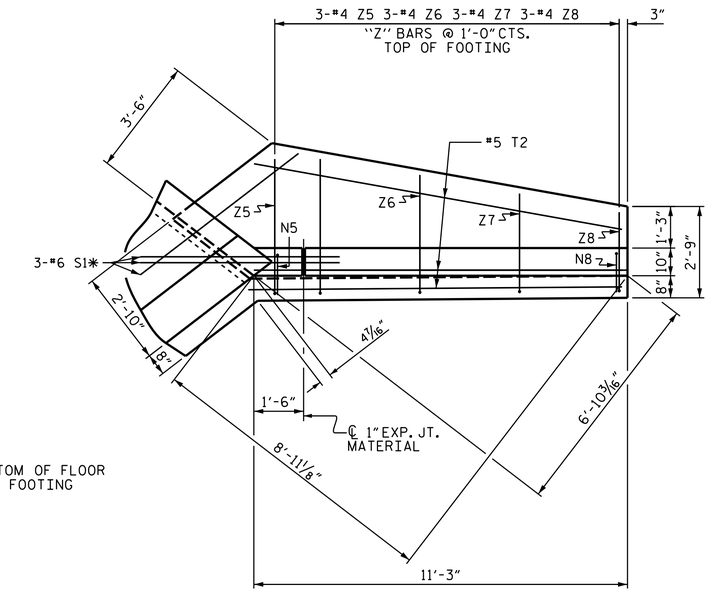

PLAN W1

NOTE

A 3 FOOT STRIP OF FILTER FABRIC SHALL BE ATTACHED TO THE FILL FACE OF THE WING COVERING THE ENTIRE LENGTH OF THE EXPANSION JOINT.

BAR TYPES

ALL BAR DIMENSIONS ARE OUT TO OUT.

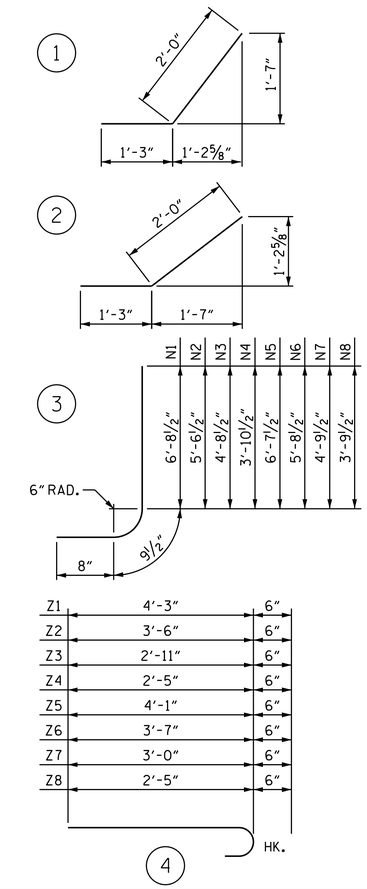

BILL OF MATERIAL

BAR	NO.	SIZE	TYPE	LENGTH	WEIGHT
H1	12	#4	STR	6'-7"	53
H2	4	#4	STR	3'-1"	8
H3	20	#4	1	3'-3"	43
H4	4	#4	STR	7'-1"	19
H5	12	#4	STR	9'-4"	75
H6	4	#4	STR	4'-10"	13
H7	20	#4	2	3'-3"	43
H8	4	#4	STR	9'-9"	26
N1	4	#4	3	8'-2"	22
N2	6	#4	3	7'-1"	28
N3	4	#4	3	6'-2"	16
N4	4	#4	3	5'-4"	14
N5	6	#4	3	8'-1"	32
N6	6	#4	3	7'-2"	29
N7	6	#4	3	6'-3"	25
N8	6	#4	3	5'-3"	21
S1	12	#6	STR	6'-0"	108
T1	6	#5	STR	8'-6"	53
T2	6	#5	STR	11'-3"	70
V1	4	#4	STR	6'-1"	16
V2	6	#4	STR	4'-11"	20
V3	4	#4	STR	4'-1"	11
V4	4	#4	STR	3'-4"	9
V5	6	#4	STR	6'-0"	24
V6	6	#4	STR	5'-1"	20
V7	6	#4	STR	4'-2"	17
V8	6	#4	STR	3'-3"	13
Z1	4	#4	4	4'-9"	13
Z2	6	#4	4	4'-0"	16
Z3	4	#4	4	3'-5"	9
Z4	4	#4	4	2'-11"	8
Z5	6	#4	4	4'-7"	18
Z6	6	#4	4	4'-1"	16
Z7	6	#4	4	3'-6"	14
Z8	6	#4	4	2'-11"	12

REINFORCING STEEL FOR 4 WINGS 934 LBS.

CLASS A CONCRETE
- 4 WINGS 14.2 C.Y.
- 2 HEADWALLS 0.9 C.Y.
- 2 END CURTAIN WALLS 1.0 C.Y.
- TOTAL 16.1 C.Y.

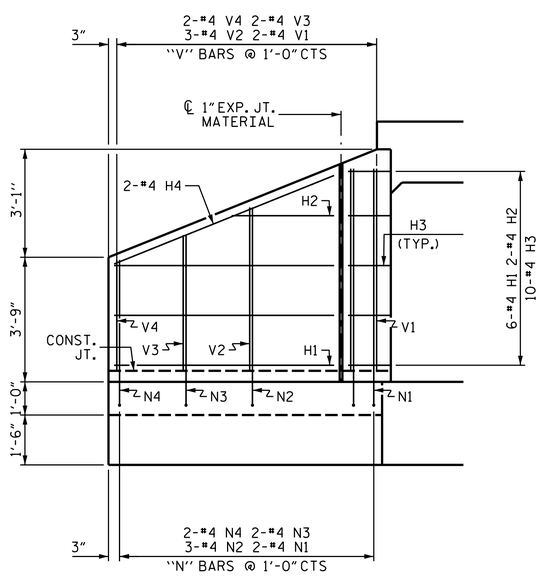

ELEVATION W2

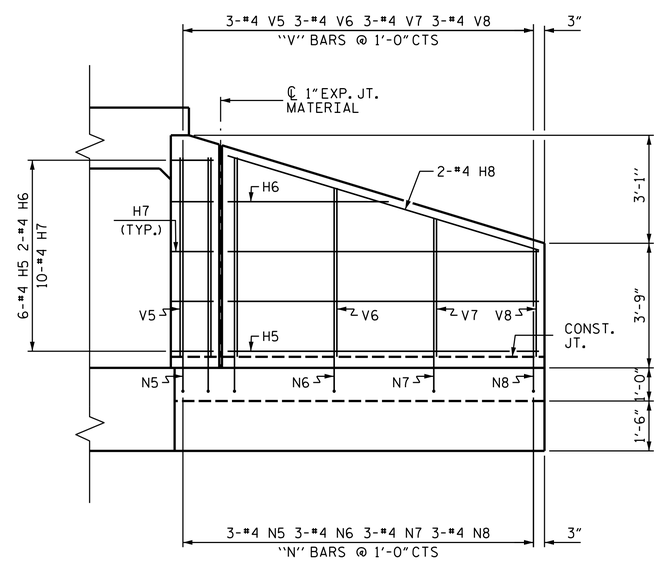

ELEVATION W1

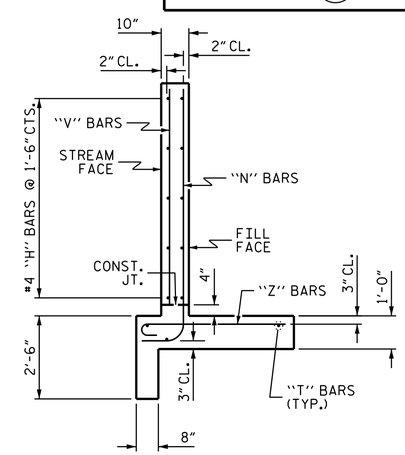

TYPICAL WING SECTION

PROJECT NO. R-2519B
YANCEY COUNTY
STATION: 14+90.30 -Y17-

SHEET 4 OF 5

STATE OF NORTH CAROLINA
DEPARTMENT OF TRANSPORTATION
RALEIGH

STANDARD WINGS FOR CONCRETE BOX CULVERT

H = 6'-0" SLOPE = 2:1

NORTH CAROLINA PROFESSIONAL SEAL 20125 ENGINEER MARSHALL G. CHEEK, JR.

Marshall G. Cheek, Jr.
8/27/2014

REVISIONS						SHEET NO.
NO.	BY:	DATE:	NO.	BY:	DATE:	C-81
1			3			TOTAL SHEETS
2			4			87

ASSEMBLED BY : M.E. POOLE DATE : 08/11
CHECKED BY : S.W. PEARCE DATE : 04/12

DRAWN BY : CCJ 12/99
CHECKED BY : RWW 03/00

STD. NO. CW7506

STR. #14