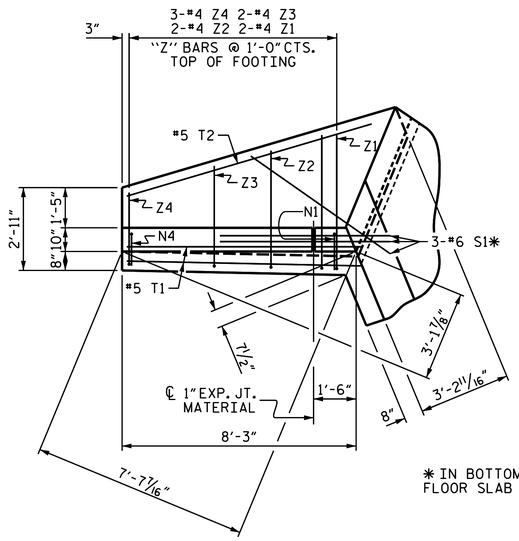

✱ IN BOTTOM OF FLOOR SLAB & FOOTING

PLAN W2

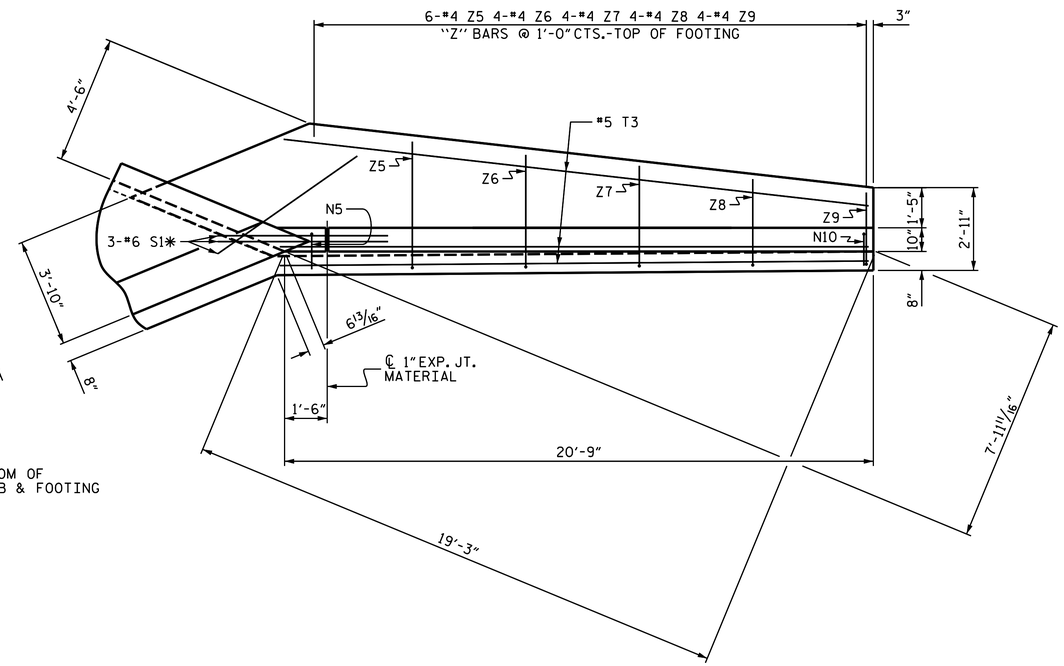

PLAN W1

NOTE: A 3 FOOT STRIP OF FILTER FABRIC SHALL BE ATTACHED TO THE FILL FACE OF THE WING COVERING THE ENTIRE LENGTH OF THE EXPANSION JOINT.

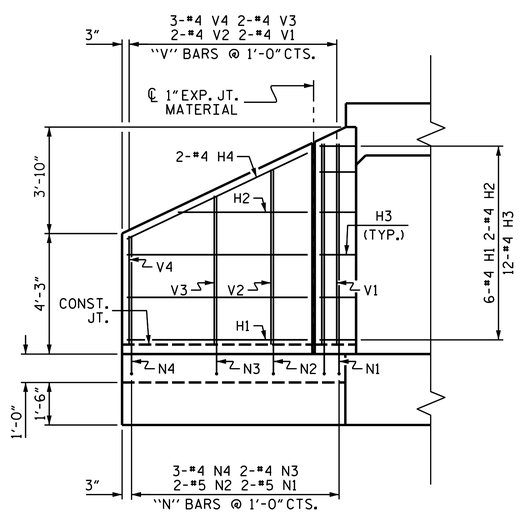

ELEVATION W2

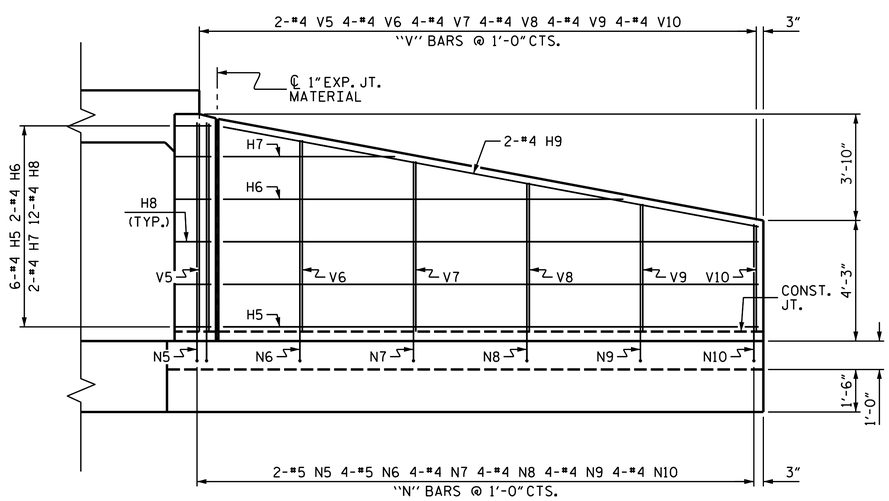

ELEVATION W1

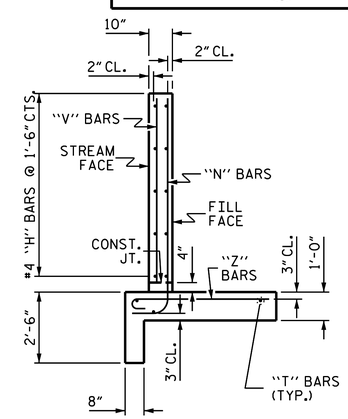

TYPICAL WING SECTION

BAR TYPES

ALL BAR DIMENSIONS ARE OUT TO OUT.

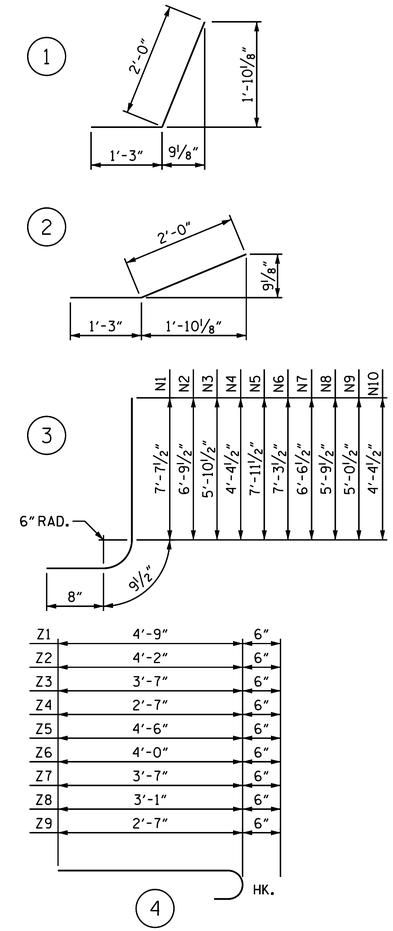

BILL OF MATERIAL

BAR	NO.	SIZE	TYPE	LENGTH	WEIGHT
H1	6	#4	STR	6'-4"	25
H2	2	#4	STR	4'-6"	6
H3	12	#4	1	3'-3"	26
H4	2	#4	STR	7'-0"	9
H5	6	#4	STR	18'-10"	75
H6	2	#4	STR	14'-1"	19
H7	2	#4	STR	6'-0"	8
H8	12	#4	2	3'-3"	26
H9	2	#4	STR	19'-2"	26
N1	2	#5	3	9'-1"	19
N2	2	#5	3	8'-3"	17
N3	2	#4	3	7'-4"	10
N4	3	#4	3	5'-7"	11
N5	2	#5	3	9'-5"	20
N6	4	#5	3	8'-9"	37
N7	4	#4	3	8'-0"	21
N8	4	#4	3	7'-3"	19
N9	4	#4	3	6'-6"	17
N10	4	#4	3	5'-10"	16
S1	6	#6	STR	6'-0"	54
T1	2	#5	STR	8'-3"	17
T2	1	#5	STR	9'-0"	9
T3	3	#5	STR	20'-9"	65
V1	2	#4	STR	7'-1"	9
V2	2	#4	STR	6'-2"	8
V3	2	#4	STR	5'-3"	7
V4	3	#4	STR	3'-9"	8
V5	2	#4	STR	7'-4"	10
V6	4	#4	STR	6'-9"	18
V7	4	#4	STR	6'-0"	16
V8	4	#4	STR	5'-3"	14
V9	4	#4	STR	4'-6"	12
V10	4	#4	STR	3'-9"	10
Z1	2	#4	4	5'-3"	7
Z2	2	#4	4	4'-8"	6
Z3	2	#4	4	4'-1"	5
Z4	3	#4	4	3'-1"	6
Z5	6	#4	4	5'-0"	20
Z6	4	#4	4	4'-6"	12
Z7	4	#4	4	4'-1"	11
Z8	4	#4	4	3'-7"	10
Z9	4	#4	4	3'-1"	8

REINFORCING STEEL FOR 2 WINGS 749 LBS.

CLASS A CONCRETE

2 WINGS	11.8 C.Y.
1 HEADWALL	1.0 C.Y.
1 END CURTAIN WALL	1.1 C.Y.
2 EDGE BEAMS	1.3 C.Y.
TOTAL	15.2 C.Y.

PROJECT NO. R-2519B

MITCHELL COUNTY

STATION: 327+50.47 -L-

SHEET 6 OF 7

STATE OF NORTH CAROLINA
DEPARTMENT OF TRANSPORTATION
RALEIGH

STANDARD WINGS FOR CONCRETE BOX CULVERT

H = 7'-0" SLOPE = 2:1

NORTH CAROLINA PROFESSIONAL SEAL 20125 ENGINEER MARSHALL G. CHEEK, JR.

8/27/2014 Marshall G. Cheek, Jr.

ASSEMBLED BY : M.A. LEBLANC	DATE : 9/13
CHECKED BY : V. NGUYEN	DATE : 10/13
DRAWN BY : CCJ	01/00
CHECKED BY : RWW	03/00

REVISIONS						SHEET NO.
NO.	BY:	DATE:	NO.	BY:	DATE:	C-70
1			3			TOTAL SHEETS
2			4			87

STR. #12