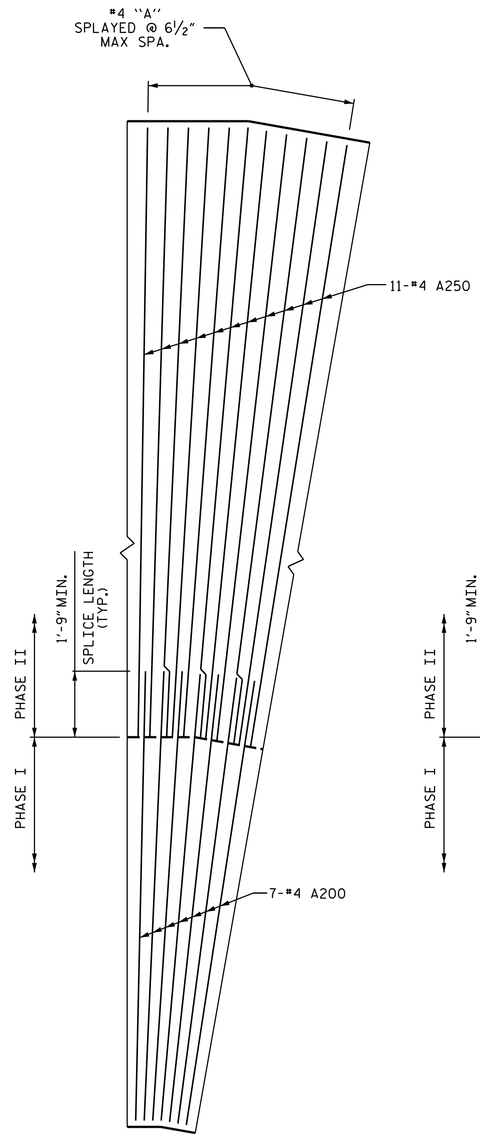

DETAIL A
TOP OF FLOOR SLAB

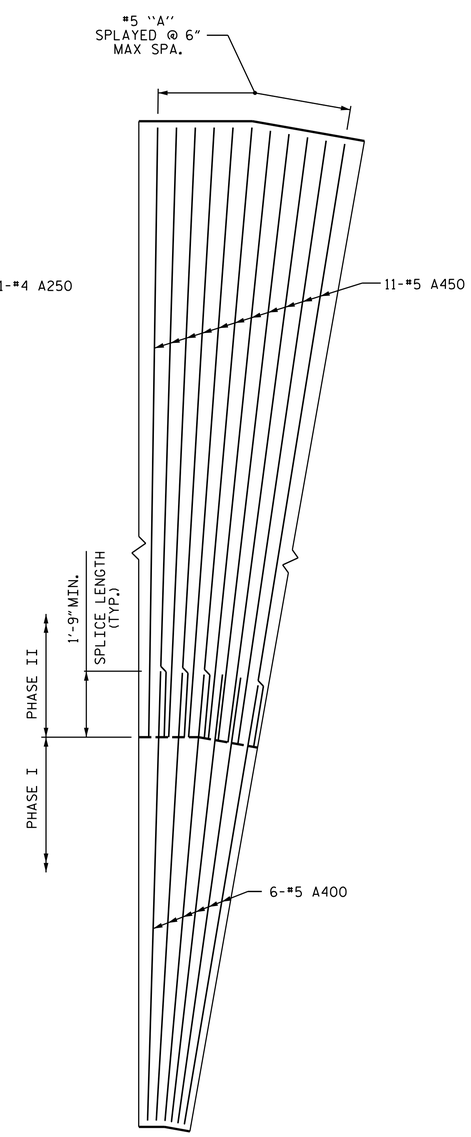

DETAIL A
BOTTOM OF FLOOR SLAB

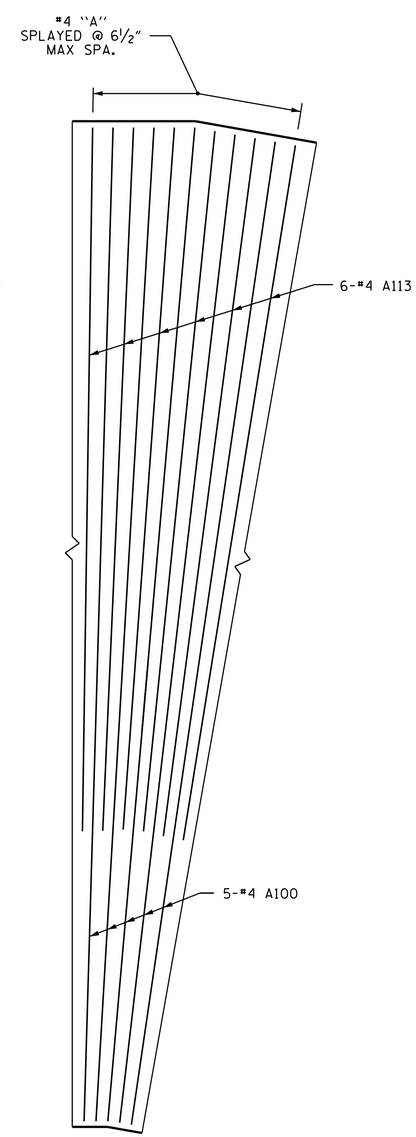

DETAIL B
BOTTOM OF ROOF SLAB

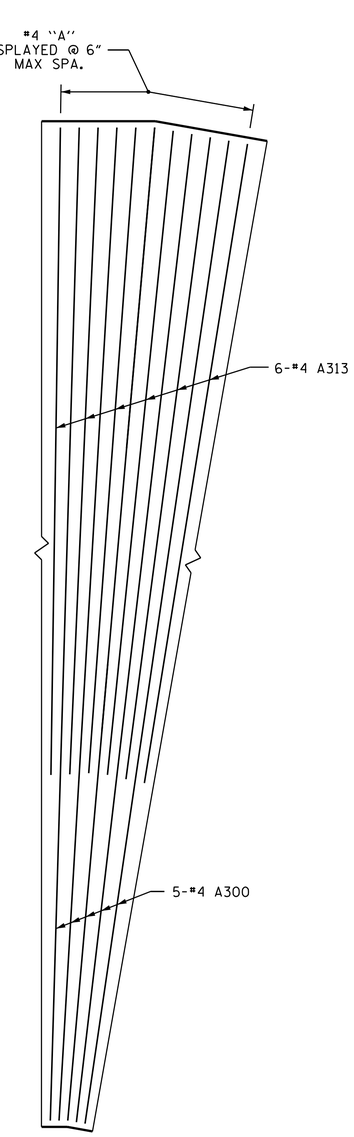

DETAIL B
TOP OF ROOF SLAB

BAR SCHEDULE

BAR	NO.	SIZE	TYPE	LENGTH	WEIGHT	BAR	NO.	SIZE	TYPE	LENGTH	WEIGHT
A1	102	#5	1	4'-7"	488	A300	93	#4	STR	26'-3"	1631
A2	102	#5	1	4'-7"	488	A301	1	#4	STR	24'-3"	16
A3	204	#4	1	4'-3"	579	A302	1	#4	STR	22'-5"	15
						A303	1	#4	STR	20'-6"	14
A100	85	#4	STR	26'-3"	1490	A304	1	#4	STR	18'-8"	12
A101	1	#4	STR	25'-10"	17	A305	1	#4	STR	16'-9"	11
A102	1	#4	STR	23'-9"	16	A306	1	#4	STR	14'-11"	10
A103	1	#4	STR	21'-9"	15	A307	1	#4	STR	13'-1"	9
A104	1	#4	STR	19'-9"	13	A308	1	#4	STR	11'-2"	7
A105	1	#4	STR	17'-9"	12	A309	1	#4	STR	9'-4"	6
A106	1	#4	STR	15'-8"	10	A310	1	#4	STR	7'-5"	5
A107	1	#4	STR	13'-8"	9	A311	1	#4	STR	5'-7"	4
A108	1	#4	STR	11'-8"	8	A312	1	#4	STR	3'-9"	3
A109	1	#4	STR	9'-8"	6	A313	6	#4	STR	17'-2"	69
A110	1	#4	STR	7'-7"	5						
A111	1	#4	STR	5'-7"	4	A400	102	#5	STR	12'-4"	1321
A112	1	#4	STR	3'-7"	2	A401	1	#5	STR	11'-6"	12
A113	6	#4	STR	18'-8"	75	A402	1	#5	STR	9'-7"	10
						A403	1	#5	STR	7'-8"	8
A200	94	#4	STR	11'-11"	748	A404	1	#5	STR	5'-10"	6
A201	1	#4	STR	11'-10"	8	A405	1	#5	STR	4'-0"	4
A202	1	#4	STR	9'-10"	7						
A203	1	#4	STR	7'-9"	5	A450	99	#5	STR	16'-2"	1669
A204	1	#4	STR	5'-9"	4	A451	1	#5	STR	15'-11"	17
A205	1	#4	STR	3'-9"	3	A452	1	#5	STR	14'-1"	15
						A453	1	#5	STR	12'-3"	13
A250	91	#4	STR	16'-2"	983	A454	1	#5	STR	10'-4"	11
A251	1	#4	STR	15'-10"	11	A455	1	#5	STR	8'-6"	9
A252	1	#4	STR	13'-9"	9	A456	1	#5	STR	6'-7"	7
A253	1	#4	STR	11'-9"	8	A457	1	#5	STR	4'-9"	5
A254	1	#4	STR	9'-9"	7	A458	1	#5	STR	2'-11"	3
A255	1	#4	STR	7'-9"	5						
A256	1	#4	STR	5'-8"	4	B1	102	#4	STR	9'-3"	630
A257	1	#4	STR	3'-8"	2	B2	102	#4	STR	7'-4"	500
						B3	204	#4	STR	9'-3"	1261
						C1	204	#4	STR	26'-11"	3668
						D1	48	#6	STR	2'-6"	180
						D2	6	#6	STR	1'-6"	14
						E1	16	#5	STR	3'-7"	60
						G1	4	#5	STR	26'-4"	110
						S2	3	#8	STR	15'-1"	121
						S3	6	#6	STR	13'-4"	120
						S4	3	#8	STR	16'-2"	129
						S5	6	#6	STR	16'-8"	150
						S6	3	#8	STR	26'-4"	211
						S7	6	#6	STR	27'-3"	246

REINFORCING STEEL = 17,363 LBS.

BAR TYPE

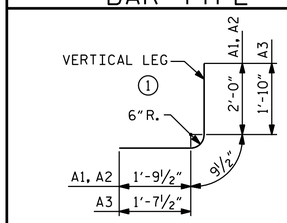

BAR DIMENSIONS ARE OUT TO OUT

SPLICE LENGTH CHART

BAR	SIZE	LENGTH
A200	#4	1'-9"
A400	#5	2'-2"
B1	#4	1'-9"
B3	#4	1'-9"
C1	#4	1'-11"
'S'	#8	4'-11"
'S'	#6	2'-9"

PROJECT NO. R-2519B
MITCHELL COUNTY
STATION: 319+76.16 -L-

SHEET 11 OF 13

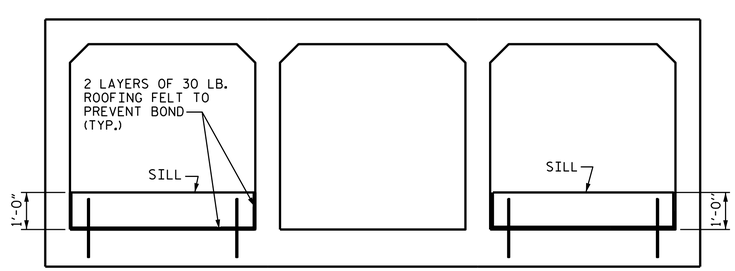

ELEVATION

SILLS SHALL BE LOCATED IN 2 OUTER BARRELS AT ENTRANCE ONLY

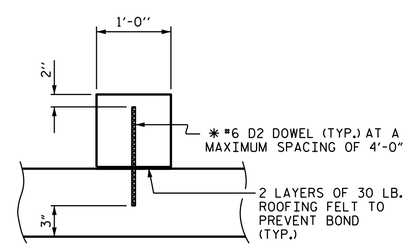

SECTION THROUGH SILL

✱ DOWELS MAY BE PUSHED INTO GREEN CONCRETE AFTER SLAB HAS BEEN FLOAT FINISHED.

NORTH CAROLINA PROFESSIONAL SEAL 20125 ENGINEER MARSHALL G. CHEEK, JR.

8/27/2014 Marshall G. Cheek, Jr.
6549D0EBAA3B405...

STATE OF NORTH CAROLINA
DEPARTMENT OF TRANSPORTATION
RALEIGH

TRIPLE 8 FT. X 8 FT.
CONCRETE BOX CULVERT
RIGHT EXTENSION

REVISIONS						SHEET NO.
NO.	BY:	DATE:	NO.	BY:	DATE:	C-51
1			3			TOTAL SHEETS
2			4			87

DRAWN BY : M.A. LEBLANC DATE : 10/13
CHECKED BY : B.C. HUNT DATE : 10/13
DESIGN ENGINEER OF RECORD: J.R. MCROY DATE : 10/13

STR#10