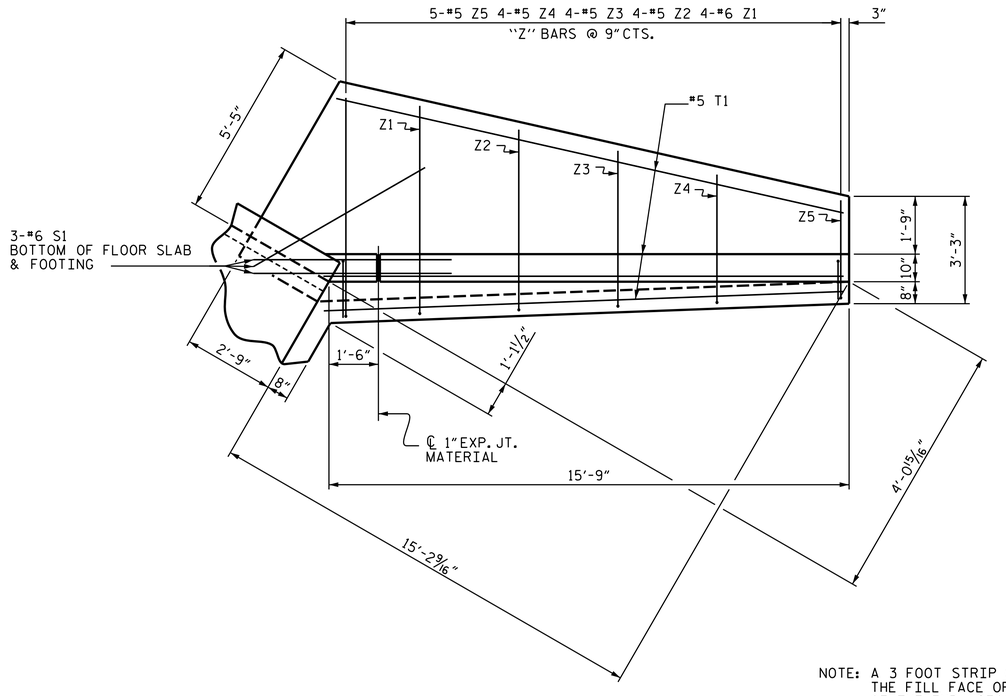

NOTE: A 3 FOOT STRIP OF FILTER FABRIC SHALL BE ATTACHED TO THE FILL FACE OF THE WING COVERING THE ENTIRE LENGTH OF THE EXPANSION JOINT.

PLAN W1

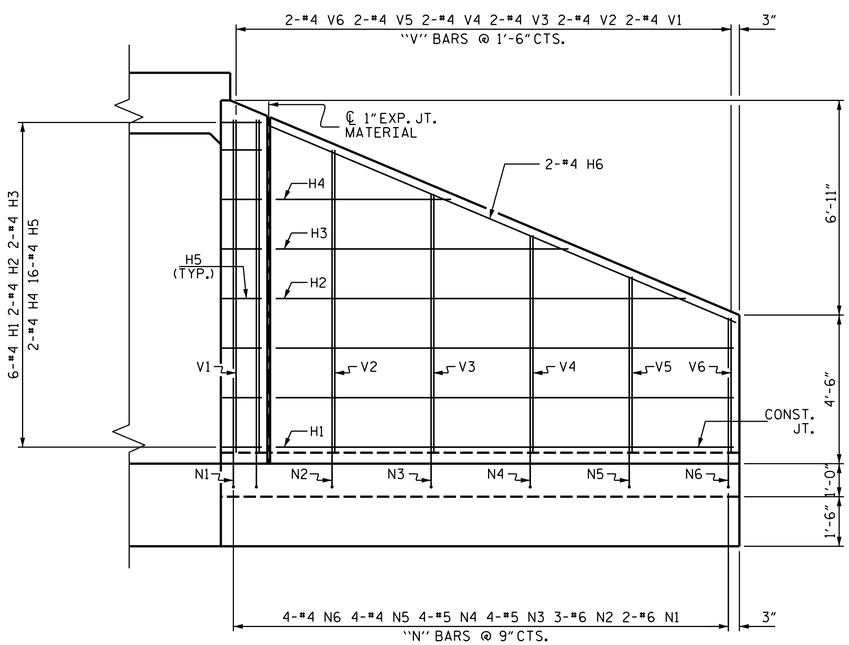

ELEVATION W1

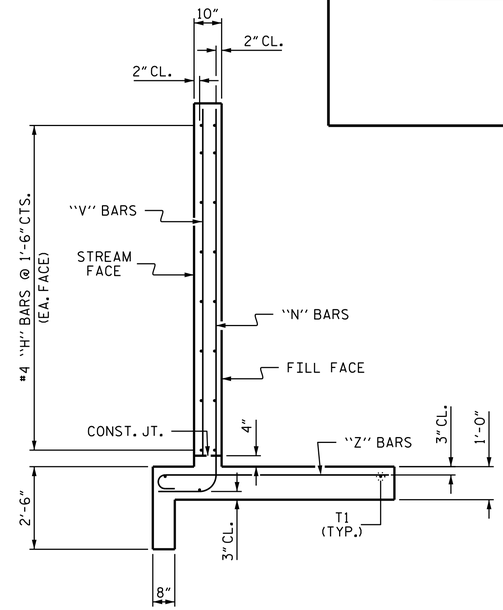

TYPICAL WING SECTION

BAR TYPES

ALL BAR DIMENSIONS ARE OUT TO OUT.

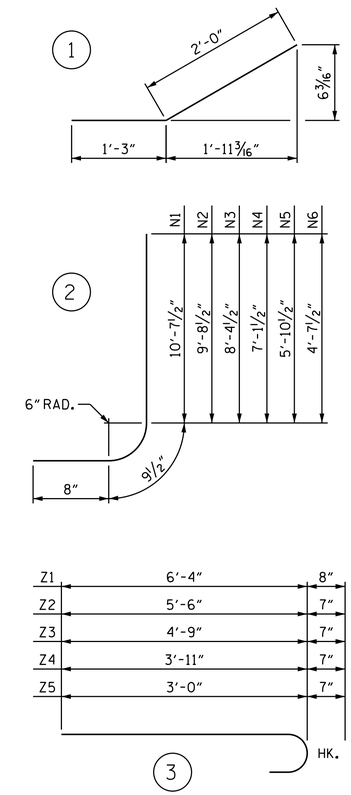

BILL OF MATERIAL

BAR	NO.	SIZE	TYPE	LENGTH	WEIGHT
H1	6	#4	STR	13'-10"	55
H2	2	#4	STR	12'-5"	17
H3	2	#4	STR	8'-10"	12
H4	2	#4	STR	5'-4"	7
H5	16	#4	1	3'-3"	35
H6	2	#4	STR	15'-5"	21
N1	2	#6	2	12'-1"	36
N2	3	#6	2	11'-2"	50
N3	4	#5	2	9'-10"	41
N4	4	#5	2	8'-7"	36
N5	4	#4	2	7'-4"	20
N6	4	#4	2	6'-1"	16
S1	3	#6	STR	6'-0"	27
T1	3	#5	STR	15'-9"	49
V1	2	#4	STR	10'-1"	13
V2	2	#4	STR	9'-2"	12
V3	2	#4	STR	7'-10"	10
V4	2	#4	STR	6'-7"	9
V5	2	#4	STR	5'-4"	7
V6	2	#4	STR	4'-1"	5
Z1	4	#6	3	7'-0"	42
Z2	4	#5	3	6'-1"	25
Z3	4	#5	3	5'-4"	22
Z4	4	#5	3	4'-6"	19
Z5	5	#5	3	3'-7"	19

REINFORCING STEEL
FOR W1 WING 605 LBS.

CLASS A CONCRETE

W1 WING	7.8	C.Y.
1 HEADWALL	2.4	C.Y.
END CURTAIN WALL	3.0	C.Y.
2 EDGE BEAMS	7.8	C.Y.
TOTAL	21.0	C.Y.

PROJECT NO. R-2519B
YANCEY COUNTY
STATION: 44+11.92 -L-

SHEET 8 OF 17

STATE OF NORTH CAROLINA
DEPARTMENT OF TRANSPORTATION
RALEIGH

W1 WING FOR CONCRETE BOX CULVERT LEFT EXTENSION

NORTH CAROLINA PROFESSIONAL SEAL 20125 ENGINEER MARSHALL G. CHECK, JR.
8/27/2014 Marshall G. Check, Jr.
6540D6EBAA3B405...

REVISIONS							SHEET NO.
NO.	BY:	DATE:	NO.	BY:	DATE:		C-8
1			3				TOTAL SHEETS
2			4				87

DRAWN BY : M. POOLE/DAH DATE : 8/13
CHECKED BY : D. A. GLADDEN DATE : 10/13
DESIGN ENGINEER OF RECORD: J. R. MCROY DATE : 10/13

STR. #7