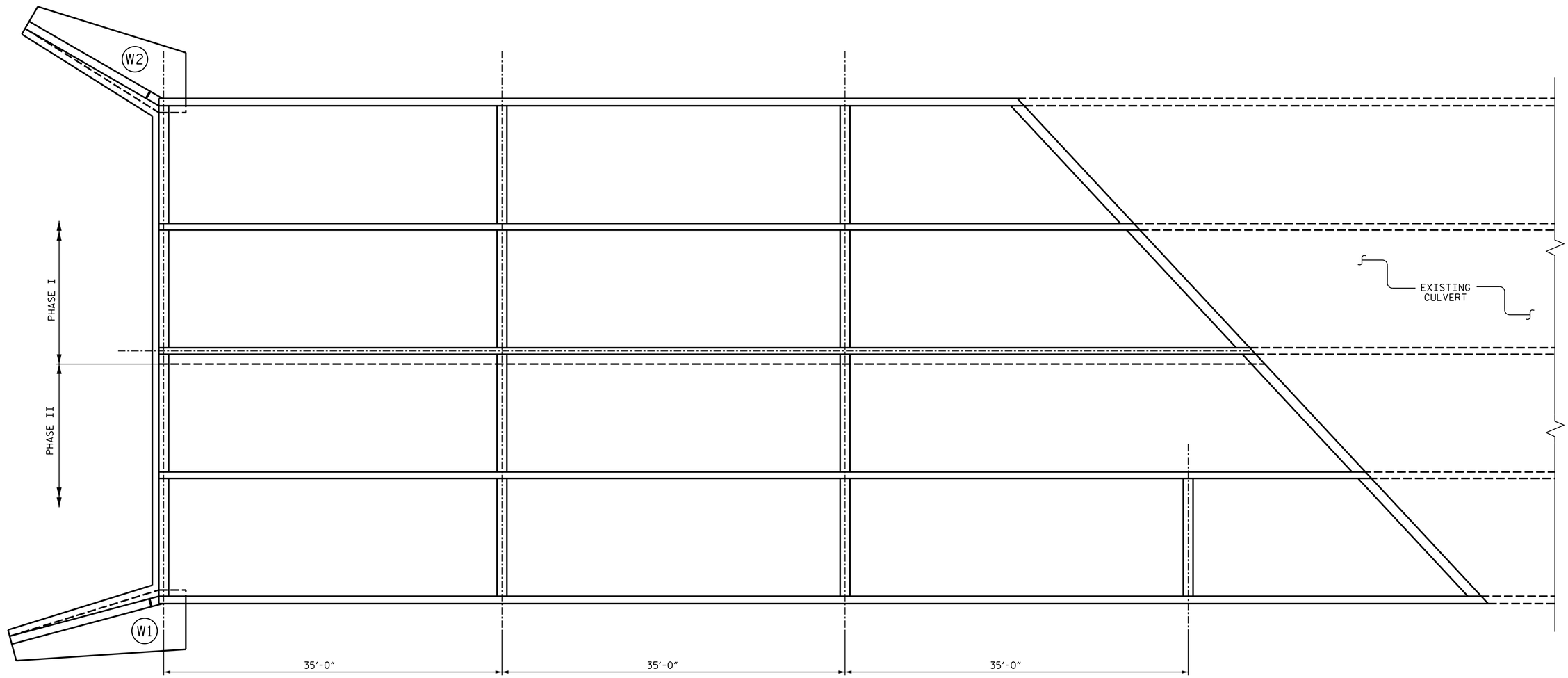

FLOOR SILL LAYOUT

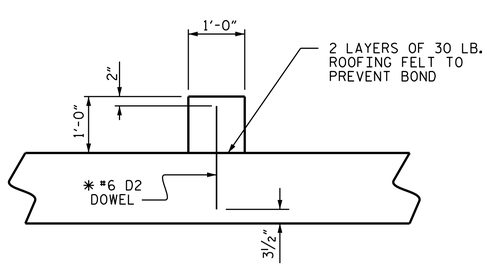

SECTION X-X

* DOWELS MAY BE PUSHED IN GREEN CONCRETE AFTER SLAB HAS BEEN FLOAT FINISHED.

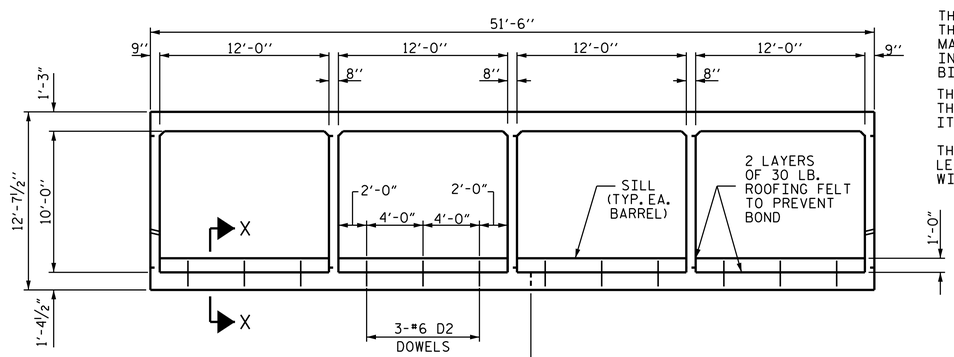

ELEVATION

NOTES

MATERIAL EXCAVATED FROM THE EXISTING BED SHALL BE STOCKPILED FOR USE IN THE PROPOSED CULVERT EXTENSION. BED MATERIAL SHALL BE SUPPLEMENTED WITH CLASS 'B' RIP RAP AS NECESSARY. BED MATERIAL SHALL BE SUBJECT TO APPROVAL BY THE ENGINEER.

THE ENTIRE COST OF WORK REQUIRED TO PLACE THE EXCAVATED MATERIAL OR SUPPLEMENTAL MATERIAL AS SHOWN ON THE PLANS SHALL BE INCLUDED IN THE CONTRACT LUMP SUM PRICE BID FOR CULVERT EXCAVATION.

THE ENTIRE COST OF WORK REQUIRED TO CONSTRUCT THE SILLS SHALL BE INCLUDED IN THE VARIOUS PAY ITEMS.

THE STOCKPILED MATERIAL SHALL BE PLACED TO THE LEVEL OF 1'-0" IN ALL BARRELS AND SHALL BE LEVEL WITH THE TOP OF THE SILLS.

PROJECT NO. R-2519B
YANCEY COUNTY
STATION: 44+11.92 -L-

SHEET 6 OF 17

STATE OF NORTH CAROLINA
DEPARTMENT OF TRANSPORTATION
RALEIGH

QUADRUPLE
12 FT. x 10 FT.
CONCRETE BOX
CULVERT
LEFT EXTENSION

REVISIONS						SHEET NO.
NO.	BY:	DATE:	NO.	BY:	DATE:	C-6
1			3			TOTAL SHEETS
2			4			87

NORTH CAROLINA PROFESSIONAL SEAL 20125 ENGINEER MARSHALL E. CHEEK, JR.
DocuSigned by: Marshall E. Cheek, Jr.
6549D6EBAA38405...
8/27/2014

DRAWN BY :	M. POOLE/DAH	DATE :	8/13
CHECKED BY :	D. A. GLADDEN	DATE :	10/13
DESIGN ENGINEER OF RECORD:	J. R. MCROY	DATE :	10/13

$$$$$$SYSTIME$$$$$
$$$$$$$$$$$$$$$$$$$$$$DGN$$$$$$$$$$$$$$$$$$$$$$$$$$
$$$$USERNAME$$$$

STR. #7