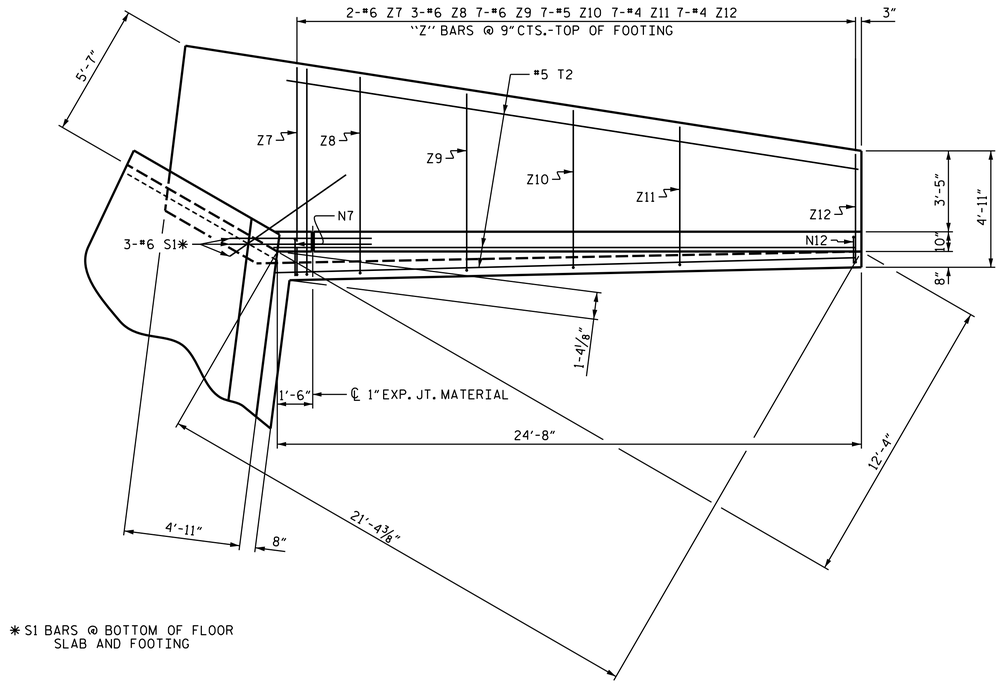

✱ S1 BARS @ BOTTOM OF FLOOR SLAB AND FOOTING

PLAN W4

NOTE: A 3 FOOT STRIP OF FILTER FABRIC SHALL BE ATTACHED TO THE FILL FACE OF THE WING COVERING THE ENTIRE LENGTH OF THE EXPANSION JOINT.

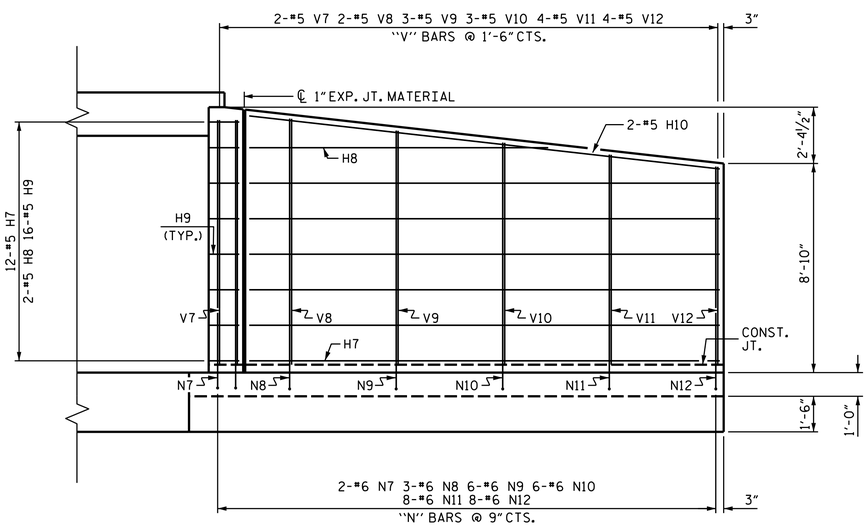

ELEVATION W4

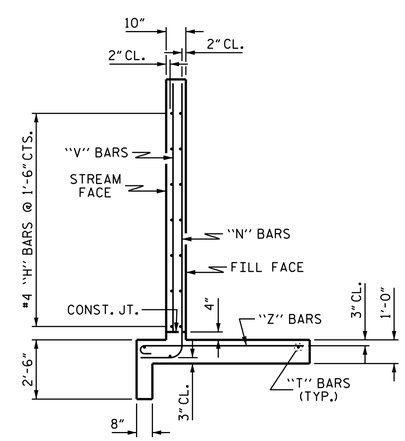

TYPICAL WING SECTION

BAR TYPES

ALL BAR DIMENSIONS ARE OUT TO OUT.

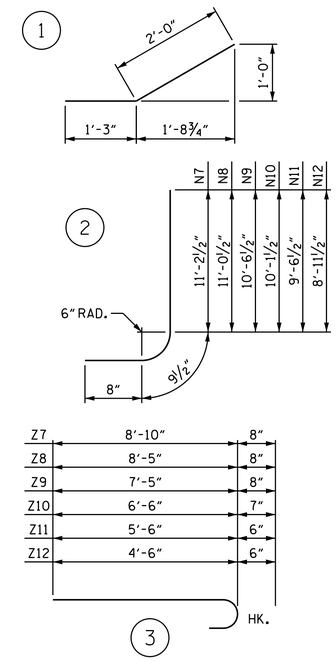

BILL OF MATERIAL

BAR	NO.	SIZE	TYPE	LENGTH	WEIGHT
H7	12	#5	STR	22'-9"	285
H8	2	#5	STR	13'-4"	28
H9	16	#5	1	3'-3"	54
H10	2	#5	STR	22'-10"	48
N7	2	#6	2	12'-8"	38
N8	3	#6	2	12'-6"	56
N9	6	#6	2	12'-0"	108
N10	6	#6	2	11'-7"	104
N11	8	#6	2	11'-0"	132
N12	8	#6	2	10'-5"	125
S1	3	#6	STR	6'-0"	27
T2	3	#5	STR	24'-8"	77
V7	2	#5	STR	10'-7"	22
V8	2	#5	STR	10'-4"	22
V9	3	#5	STR	9'-11"	31
V10	3	#5	STR	9'-6"	30
V11	4	#5	STR	8'-11"	37
V12	4	#5	STR	8'-4"	35
Z7	2	#6	3	9'-5"	28
Z8	3	#6	3	9'-1"	41
Z9	7	#6	3	8'-1"	85
Z10	7	#5	3	7'-1"	52
Z11	7	#4	3	6'-0"	28
Z12	7	#4	3	5'-0"	23

REINFORCING STEEL FOR W4 WING 1,516 LBS.

CLASS A CONCRETE W4 WING 16.4 C.Y.

PROJECT NO. R-2519B
YANCEY COUNTY
STATION: 44+11.92 -L-

SHEET 16 OF 17

STATE OF NORTH CAROLINA
DEPARTMENT OF TRANSPORTATION
RALEIGH

W4 WING FOR CONCRETE BOX CULVERT RIGHT EXTENSION

NORTH CAROLINA PROFESSIONAL SEAL 20125 ENGINEER MARSHALL C. CREEK, JR.

8/27/2014 Marshall C. Creek, Jr.

REVISIONS								SHEET NO.
NO.	BY:	DATE:	NO.	BY:	DATE:			C-16
1			3					TOTAL SHEETS
2			4					87

STR. #7

DRAWN BY : M. POOLE/DAH DATE : 8/13
CHECKED BY : D. A. GLADDEN DATE : 10/13
DESIGN ENGINEER OF RECORD: J. R. MCROY DATE : 10/13