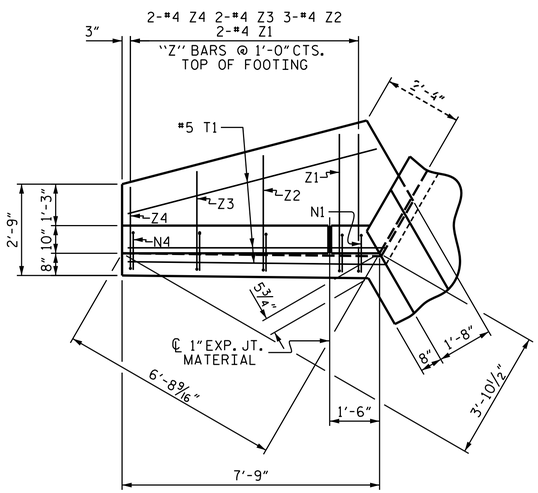

PLAN W2

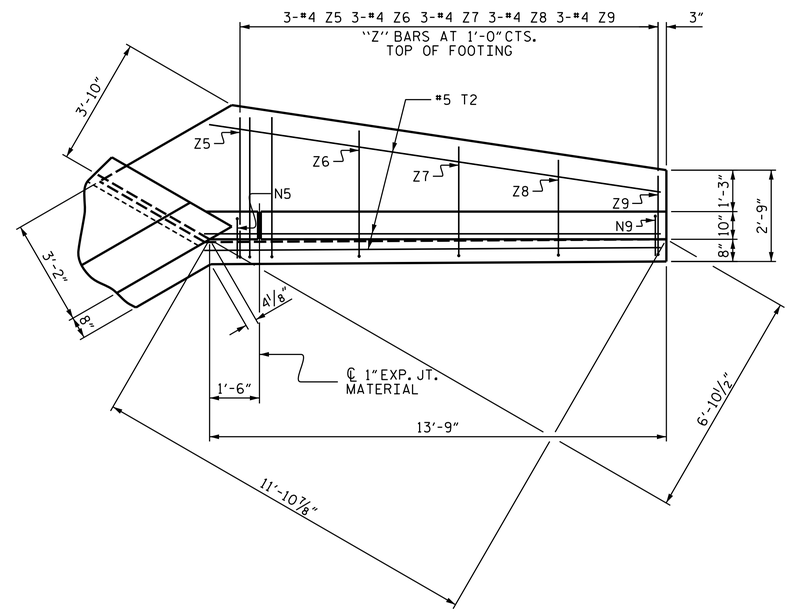

PLAN W1

NOTES

A 3 FOOT STRIP OF FILTER FABRIC SHALL BE ATTACHED TO THE FILL FACE OF THE WING COVERING THE ENTIRE LENGTH OF THE EXPANSION JOINT.

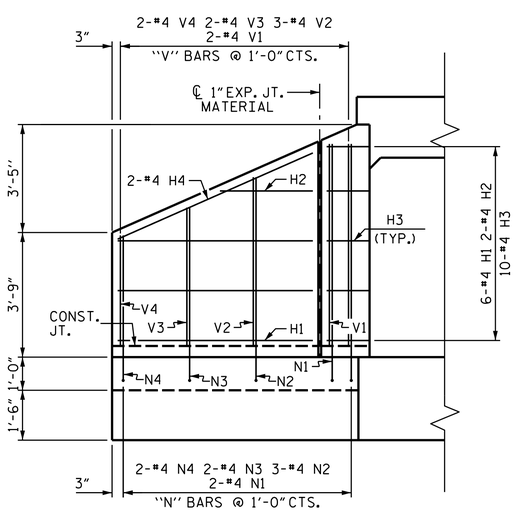

ELEVATION W2

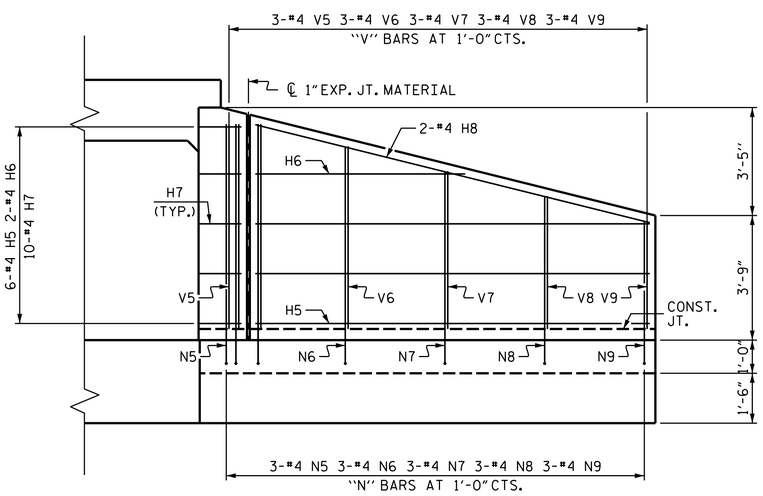

ELEVATION W1

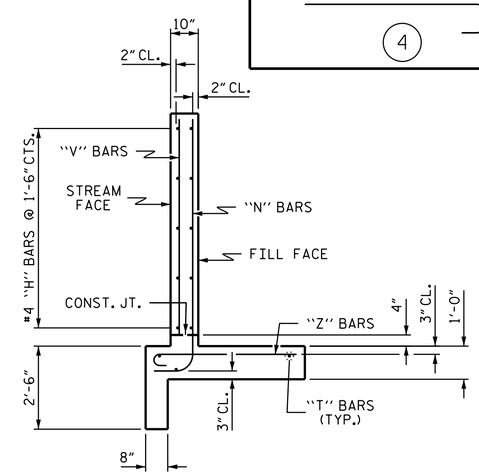

TYPICAL WING SECTION

BAR TYPES

ALL BAR DIMENSIONS ARE OUT TO OUT.

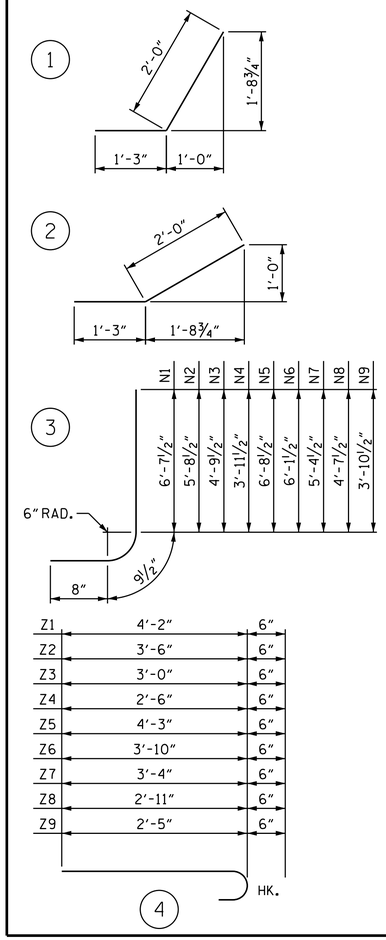

BILL OF MATERIAL

BAR	NO.	SIZE	TYPE	LENGTH	WEIGHT
H1	6	#4	STR	5'-10"	23
H2	2	#4	STR	2'-9"	4
H3	10	#4	1	3'-3"	22
H4	2	#4	STR	6'-5"	9
H5	6	#4	STR	11'-10"	47
H6	2	#4	STR	6'-3"	8
H7	10	#4	2	3'-3"	22
H8	2	#4	STR	12'-2"	16
N1	2	#4	3	8'-1"	11
N2	3	#4	3	7'-2"	14
N3	2	#4	3	6'-3"	8
N4	2	#4	3	5'-5"	7
N5	3	#4	3	8'-2"	16
N6	3	#4	3	7'-7"	15
N7	3	#4	3	6'-10"	14
N8	3	#4	3	6'-1"	12
N9	3	#4	3	5'-4"	11
T1	3	#5	STR	7'-9"	24
T2	3	#5	STR	13'-9"	43
V1	2	#4	STR	6'-1"	8
V2	3	#4	STR	5'-1"	10
V3	2	#4	STR	4'-2"	6
V4	2	#4	STR	3'-4"	4
V5	3	#4	STR	6'-2"	12
V6	3	#4	STR	5'-6"	11
V7	3	#4	STR	4'-9"	10
V8	3	#4	STR	4'-0"	8
V9	3	#4	STR	3'-3"	7
Z1	2	#4	4	4'-8"	6
Z2	3	#4	4	4'-0"	8
Z3	2	#4	4	3'-6"	5
Z4	2	#4	4	3'-0"	4
Z5	3	#4	4	4'-9"	10
Z6	3	#4	4	4'-4"	9
Z7	3	#4	4	3'-10"	8
Z8	3	#4	4	3'-5"	7
Z9	3	#4	4	2'-11"	6

REINFORCING STEEL FOR 2 WINGS 465 LBS

CLASS A CONCRETE

2 WINGS	7.2	CY
1 HEADWALL	0.8	CY
1 END CURTAIN WALL	1.0	CY
2 EDGE BEAMS	1.4	CY
TOTAL	10.4	CY

PROJECT NO. R-2519B
MITCHELL COUNTY
STATION: 345+98.42 -L-

SHEET 5 OF 6

STATE OF NORTH CAROLINA
DEPARTMENT OF TRANSPORTATION
RALEIGH

WINGS FOR CONCRETE BOX CULVERT

H = 6'-0" SLOPE = 2:1

NORTH CAROLINA PROFESSIONAL SEAL 20125 ENGINEER MARSHALL C. CHEEK, JR.

8/27/2014 DocuSigned by: Marshall C. Cheek, Jr. 6549D6EBAA33B405...

ASSEMBLED BY : A. SORSENGINH	DATE : 7/12/11
CHECKED BY : M. POOLE	DATE : 7/2011
DRAWN BY : CCJ 11/99	
CHECKED BY : RWW 03/00	

REVISIONS								SHEET NO.
NO.	BY:	DATE:	NO.	BY:	DATE:			C-76
1			3					TOTAL SHEETS
2			4					87

STR. #13 STD. NO. CW6006