$$$$$$SYSTIME$$$$$
$$$$$$$$$$$$$$$$$$$$$$$$DGN$$$$$$$$$$$$$$$$$$$$$$$$
$$$$USERNAME$$$$

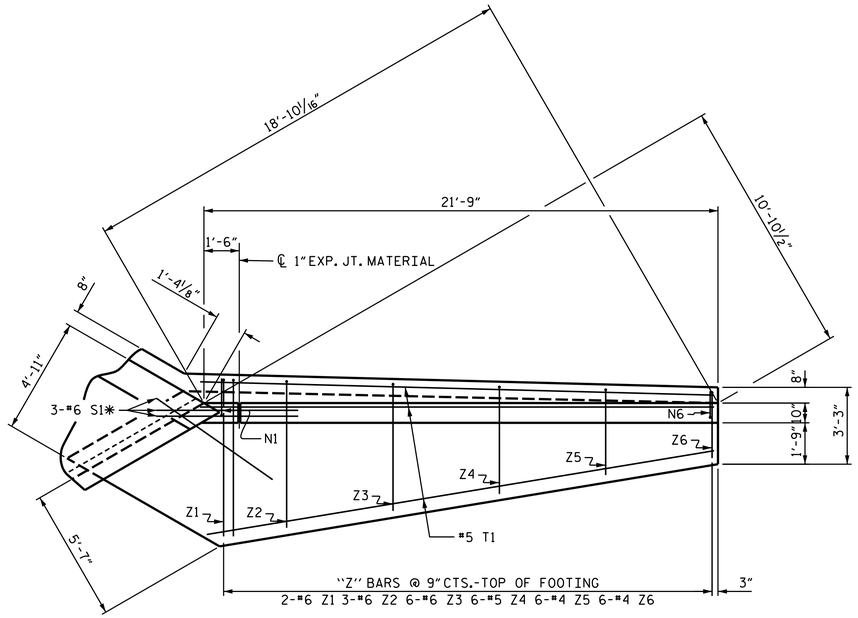

✱ S1 BARS @ BOTTOM OF FLOOR SLAB AND FOOTING

PLAN W3

NOTE: A 3 FOOT STRIP OF FILTER FABRIC SHALL BE ATTACHED TO THE FILL FACE OF THE WING COVERING THE ENTIRE LENGTH OF THE EXPANSION JOINT.

BAR TYPES

ALL BAR DIMENSIONS ARE OUT TO OUT.

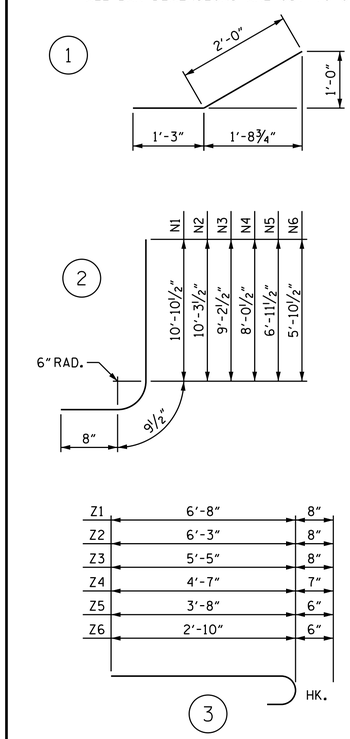

BILL OF MATERIAL

BAR	NO.	SIZE	TYPE	LENGTH	WEIGHT
H1	8	#4	STR	19'-10"	106
H2	2	#4	STR	16'-4"	22
H3	2	#4	STR	10'-3"	14
H4	2	#4	STR	4'-3"	6
H5	16	#4	1	3'-3"	35
H6	2	#4	STR	20'-5"	27
N1	2	#6	2	12'-4"	37
N2	3	#6	2	11'-9"	53
N3	6	#6	2	10'-8"	96
N4	6	#5	2	9'-6"	59
N5	6	#5	2	8'-5"	53
N6	6	#4	2	7'-4"	29
S1	3	#6	STR	6'-0"	27
T1	3	#5	STR	21'-9"	68
V1	2	#4	STR	10'-4"	14
V2	2	#4	STR	9'-9"	13
V3	3	#4	STR	8'-8"	17
V4	3	#4	STR	7'-6"	15
V5	3	#4	STR	6'-5"	13
V6	3	#4	STR	5'-3"	11
Z1	2	#6	3	7'-4"	22
Z2	3	#6	3	6'-11"	31
Z3	6	#6	3	6'-1"	55
Z4	6	#5	3	5'-2"	32
Z5	6	#4	3	4'-2"	17
Z6	6	#4	3	3'-4"	13

REINFORCING STEEL FOR W3 WING 885 LBS.

CLASS A CONCRETE

W3 WING	11.5	C.Y.
1 HEADWALL	2.6	C.Y.
END CURTAIN WALL	3.2	C.Y.
2 EDGE BEAMS	7.8	C.Y.
TOTAL	25.1	C.Y.

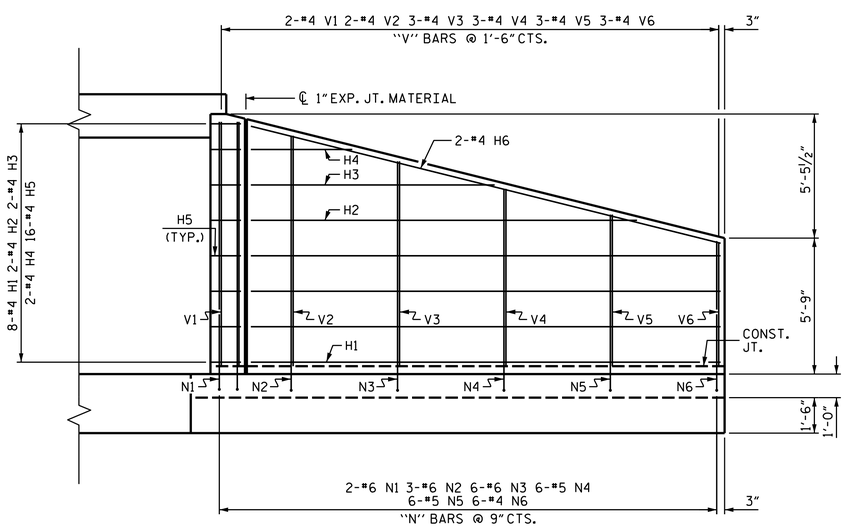

ELEVATION W3

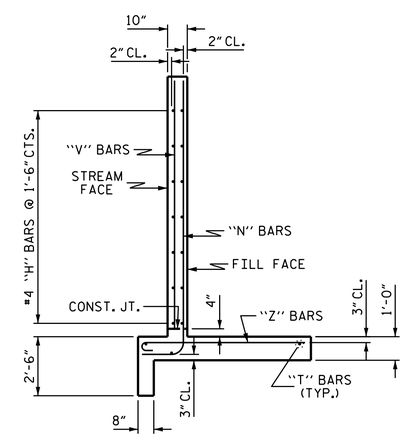

TYPICAL WING SECTION

PROJECT NO. R-2519B

YANCEY COUNTY

STATION: 44+11.92 -L-

SHEET 15 OF 17

STATE OF NORTH CAROLINA
DEPARTMENT OF TRANSPORTATION
RALEIGH

W3 WING FOR CONCRETE BOX CULVERT RIGHT EXTENSION

NORTH CAROLINA PROFESSIONAL SEAL 20125 ENGINEER MARSHALL G. CHEEK, JR.

8/27/2014 Marshall G. Cheek, Jr.

REVISIONS							SHEET NO.
NO.	BY:	DATE:	NO.	BY:	DATE:		C-15
1			3				TOTAL SHEETS
2			4				87

STR. #7

DRAWN BY : M. POOLE/DAH DATE : 8/13
CHECKED BY : D. A. GLADDEN DATE : 10/13
DESIGN ENGINEER OF RECORD: J. R. MCROY DATE : 10/13