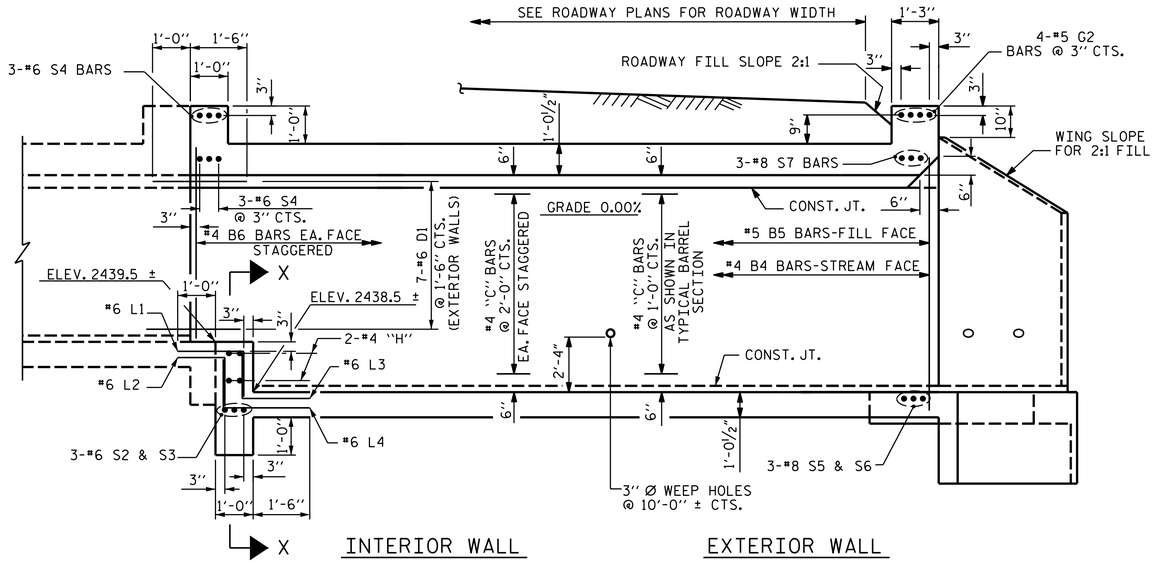

RIGHT CULVERT EXTENSION SECTION NORMAL TO ROADWAY

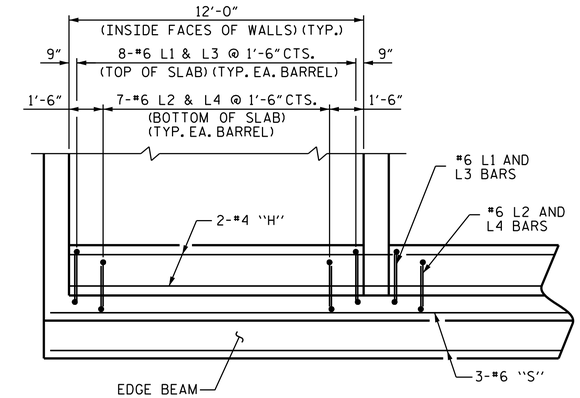

SECTION X-X

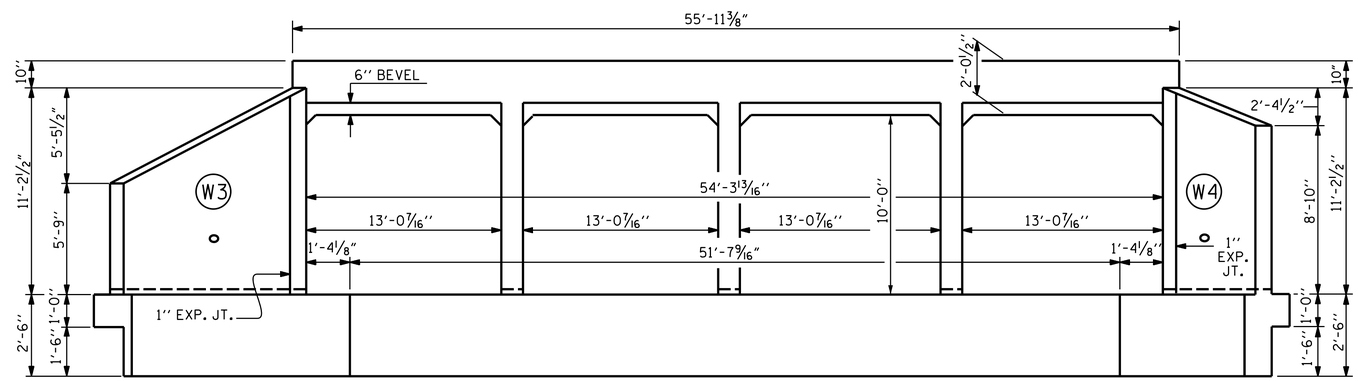

END ELEVATION NORMAL TO SKEW (RIGHT EXTENSION)

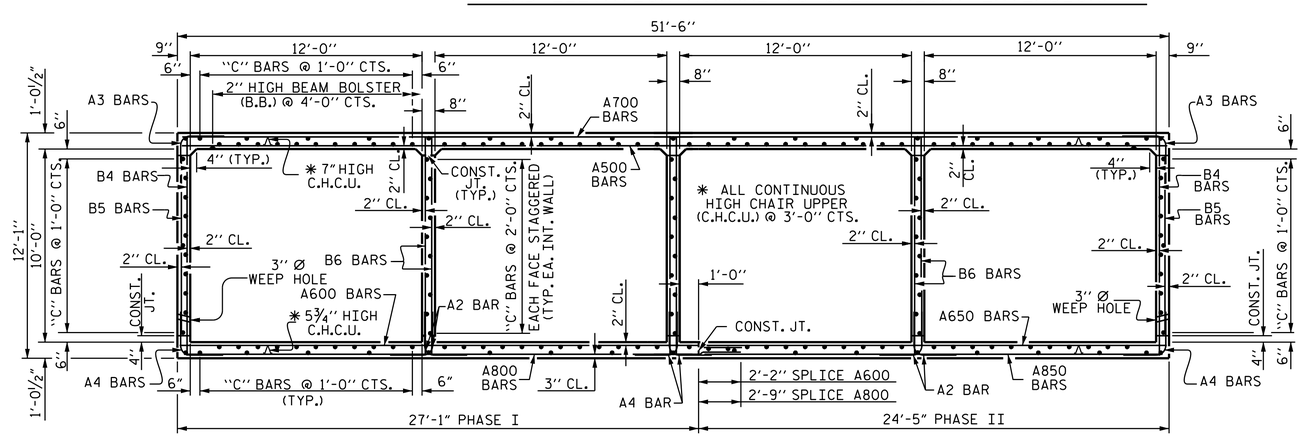

RIGHT ANGLE SECTION OF BARREL

THERE ARE 182 "C" BARS IN SECTION OF BARREL (LOOKING UPSTREAM)

PROJECT NO. R-2519B

YANCEY COUNTY

STATION: 44+11.92 -L-

SHEET 11 OF 17

STATE OF NORTH CAROLINA
DEPARTMENT OF TRANSPORTATION
RALEIGH

QUADRUPLE
12 FT. x 10 FT.
CONCRETE BOX CULVERT
RIGHT EXTENSION

REVISIONS								SHEET NO.
NO.	BY:	DATE:	NO.	BY:	DATE:			C-11
1			3					TOTAL SHEETS
2			4					87

NORTH CAROLINA PROFESSIONAL SEAL 20125 ENGINEER MARSHALL B. CHEEK, JR.

8/27/2014

6549D6EBAA38A05

STR.#7

DRAWN BY :	M. POOLE/DAH	DATE :	8/13
CHECKED BY :	D. A. GLADDEN	DATE :	10/13
DESIGN ENGINEER OF RECORD:	J. R. MCROY	DATE :	10/13

$$$$$$SYSTIME$$$$$
$$$$$$$$$$$$$$$$$$$$$$$$DGN$$$$$$$$$$$$$$$$$$$$$$$$
$$$$USERNAME$$$$