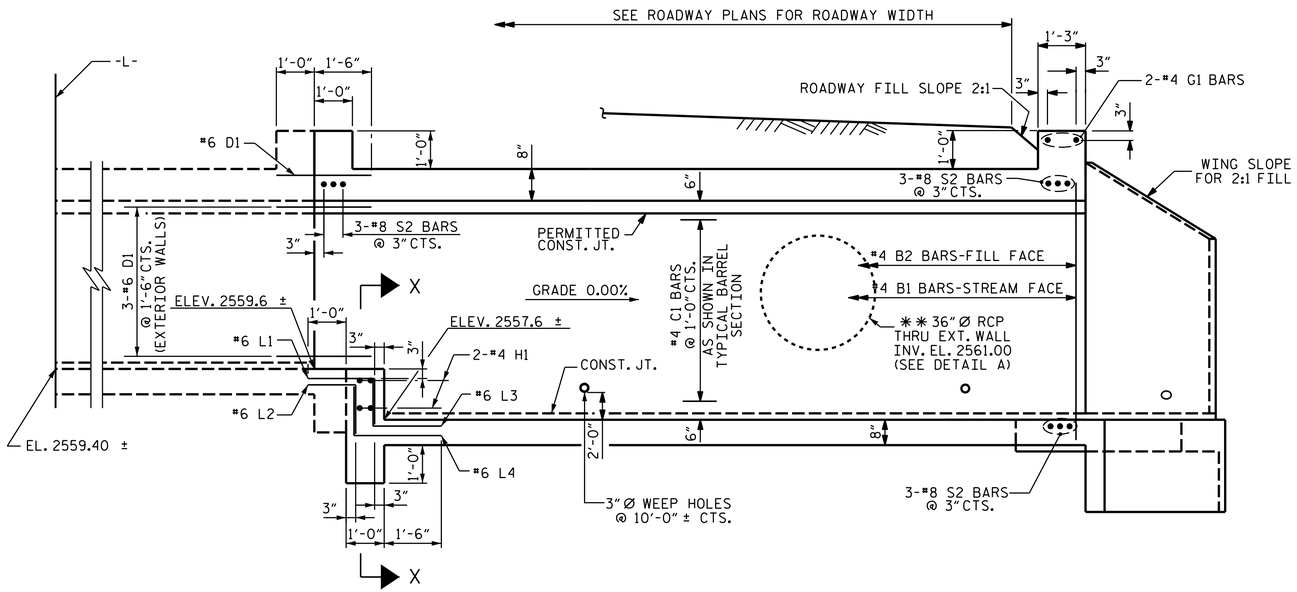

RIGHT CULVERT EXTENSION SECTION NORMAL TO ROADWAY

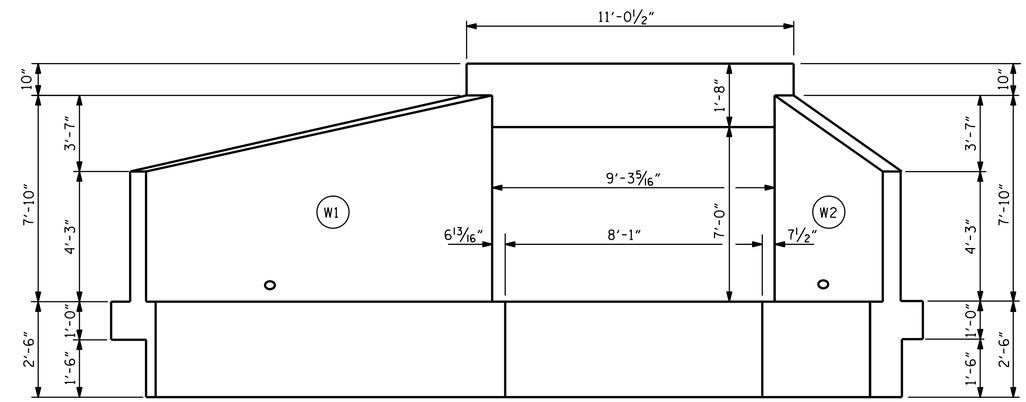

OUTLET END ELEVATION NORMAL TO SKEW

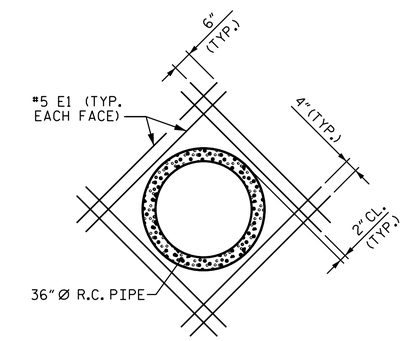

DETAIL "A"

✱✱ THE PIPE THROUGH THE WALL OF THE CULVERT SHALL BE LOCATED BY THE ENGINEER. THE REINFORCING STEEL SHALL BE CUT & FIELD BENT AS NECESSARY TO CLEAR THE PIPE.

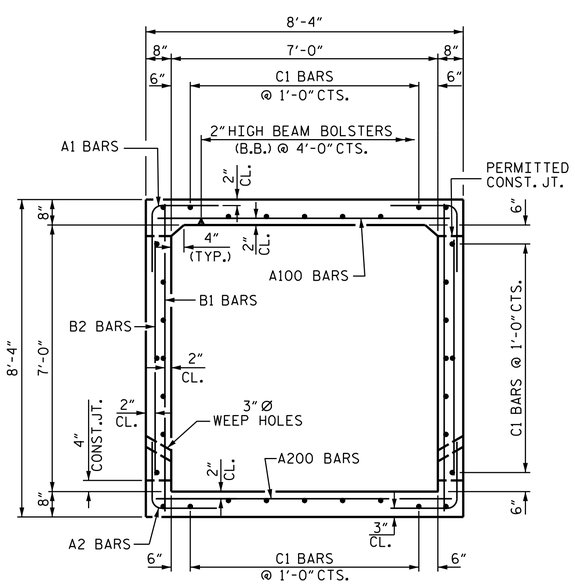

RIGHT ANGLE SECTION OF BARREL

THERE ARE 34 C1 BARS IN SECTION OF BARREL

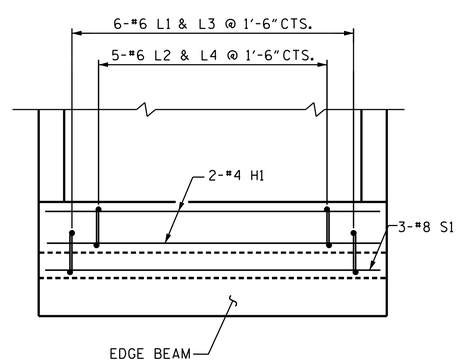

SECTION X-X

RIGHT EXTENSION QUANTITIES

CLASS A CONCRETE			
BARREL @ 0.761 CY/FT		16.5	C.Y.
SILLS		1.0	C.Y.
WINGS, ETC.		14.4	C.Y.
TOTAL		31.9	C.Y.
REINFORCING STEEL			
BARREL		2,634	LBS.
WINGS, ETC.		749	LBS.
TOTAL		3,383	LBS.
FOUNDATION CONDITIONING MATERIAL		13	TONS
CULVERT EXCAVATION		LUMP	SUM

PROJECT NO. R-2519B

YANCEY COUNTY

STATION: 155+44.57 -L-

SHEET 7 OF 11

STATE OF NORTH CAROLINA
DEPARTMENT OF TRANSPORTATION
RALEIGH

SINGLE 7 FT. X 7 FT. CONCRETE BOX CULVERT RIGHT EXTENSION

NORTH CAROLINA PROFESSIONAL SEAL 20125 ENGINEER MARSHALL G. CHEEK, JR.

8/27/2014 DocuSigned by: Marshall G. Cheek, Jr. 6549D6EBAA3B405...

REVISIONS								SHEET NO.
NO.	BY:	DATE:	NO.	BY:	DATE:			C-36
1			3					TOTAL SHEETS
2			4					87

STR. #9

ASSEMBLED BY : A. SORSENGINH/JRM DATE : 5/2013
CHECKED BY : H. KIM/WJH DATE : 7/2013
DESIGN ENG. OF RECORD: M.A. LEBLANC DATE : 10/2013

REVISED 11-19-99 BY M.M. CHECKED BY R.W.W.
REVISED 8-28-92 BY E.L.R. CHECKED BY C.R.P.
REVISED 8-22-89 BY A.R.B. CHECKED BY C.R.K.
REDRAWN 8-22-89