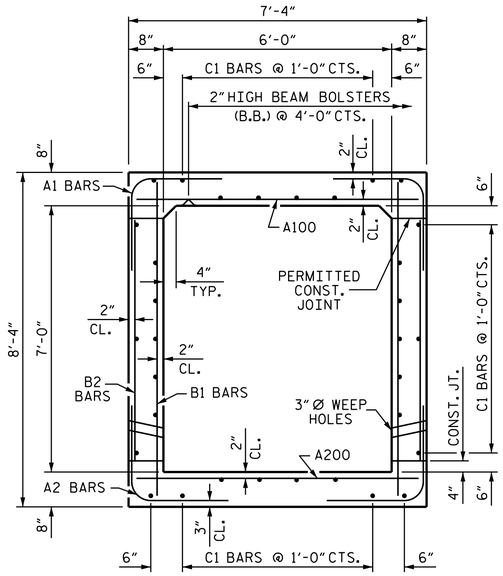

RIGHT ANGLE SECTION OF BARREL

THERE ARE 32 C1 BARS IN SECTION OF BARREL

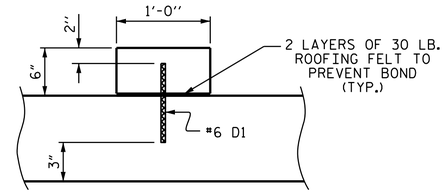

SECTION THRU LOW SILL

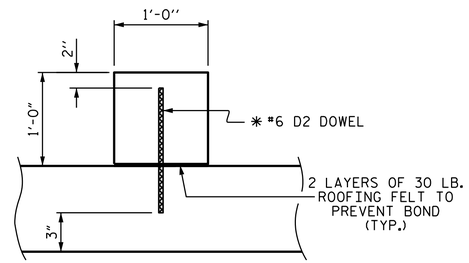

SECTION THRU HIGH SILL

* DOWELS MAY BE PUSHED INTO GREEN CONCRETE AFTER SLAB HAS BEEN FLOAT FINISHED.

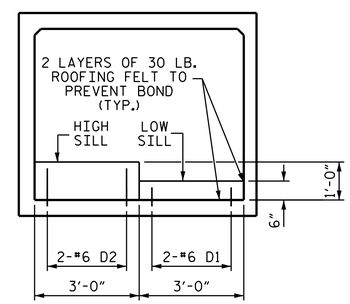

ELEVATION

CULVERT SILL DETAILS

BAR TYPE

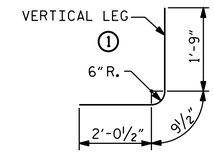

BAR DIMENSIONS ARE OUT TO OUT

SPLICE LENGTH CHART

BAR	SIZE	LENGTH
B1	#4	1'-9"
C1	#4	1'-11"

BAR SCHEDULE

BAR	NO.	SIZE	TYPE	LENGTH	WEIGHT
A1	136	#4	1	4'-7"	416
A2	136	#5	1	4'-7"	650
A100	128	#4	STR	6'-11"	591
A101	4	#4	STR	5'-1"	14
A102	4	#4	STR	3'-4"	9
A200	128	#5	STR	6'-11"	923
A201	4	#5	STR	5'-1"	21
A202	4	#5	STR	3'-4"	14
B1	136	#4	STR	7'-10"	712
B2	136	#4	STR	6'-4"	575
C1	96	#4	STR	24'-0"	1539
D1	10	#6	STR	9"	11
D2	10	#6	STR	1'-3"	19
G1	4	#4	STR	8'-0"	21
S2	12	#8	STR	8'-0"	256
REINFORCING STEEL				= 5771	LBS

NOTES

MATERIAL EXCAVATED FROM THE EXISTING BED SHALL BE STOCKPILED FOR USE IN THE PROPOSED CULVERT AS SHOWN IN THE "PLAN OF SILL LOCATION". BED MATERIAL SHALL BE SUPPLEMENTED WITH CLASS 'B' RIP RAP AS NECESSARY. STONE LARGER THAN 6" SHALL NOT BE PLACED WITHIN THE LOW FLOW CHANNEL. BED MATERIAL SHALL BE SUBJECT TO APPROVAL BY THE ENGINEER.

THE ENTIRE COST OF WORK REQUIRED TO PLACE THE EXCAVATED MATERIAL OR SUPPLEMENTAL MATERIAL AS SHOWN ON THE PLANS SHALL BE INCLUDED IN THE CONTACT LUMP SUM PRICE BID FOR CULVERT EXCAVATION.

THE ENTIRE COST OF WORK REQUIRED TO CONSTRUCT THE SILLS SHALL BE INCLUDED IN THE VARIOUS PAY ITEMS.

THE STOCKPILED MATERIAL SHALL BE PLACED AS SHOWN IN THE "PLAN OF SILL LOCATION" SKETCH TO PROVIDE A 6" DEPTH LOW FLOW CHANNEL BETWEEN THE LOW FLOW SILLS, AND SHALL BE PLACED TO THE LEVEL OF 1'-0" BETWEEN THE HIGH FLOW SILLS.

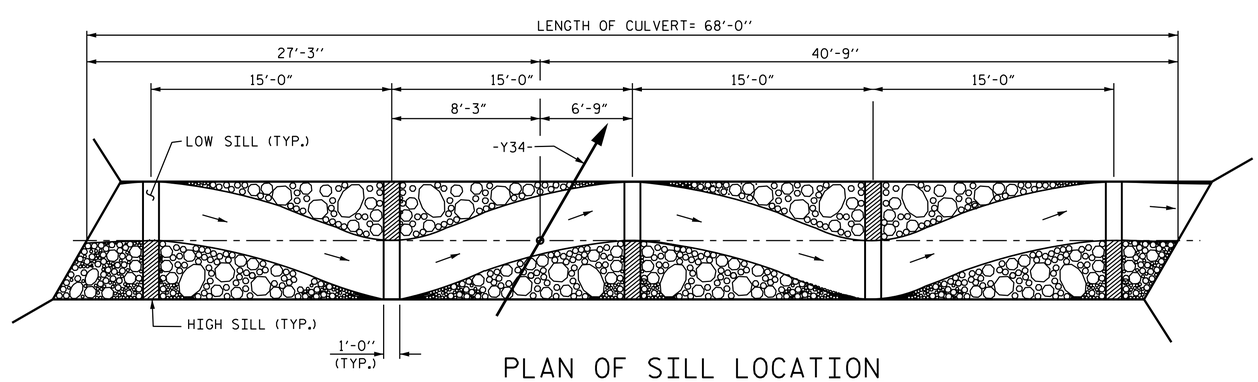

PLAN OF SILL LOCATION

NOTE : HIGH FLOW SEALS ARE DENOTED BY CROSSHATCHED AREA

PROJECT NO. R-2519B
MITCHELL COUNTY
STATION: 11+07.96 -Y34-

SHEET 3 OF 5

STATE OF NORTH CAROLINA
DEPARTMENT OF TRANSPORTATION
RALEIGH

SINGLE 6 FT. X 7 FT. CONCRETE BOX CULVERT

NORTH CAROLINA PROFESSIONAL SEAL 20125 ENGINEER MARSHALL G. CHEEK, JR.
DocuSigned by: Marshall G. Cheek, Jr.
6549D6EBAA3B405...
8/27/2014

REVISIONS						SHEET NO.
NO.	BY:	DATE:	NO.	BY:	DATE:	C-85
1			3			TOTAL SHEETS
2			4			87

STR. #15

ASSEMBLED BY : A. SORSENGINH/VXN DATE : 9/2011
CHECKED BY : H. KIM DATE : 10/2011
DESIGN ENGINEER OF RECORD : M.A. LEBLANC DATE : 10/2013