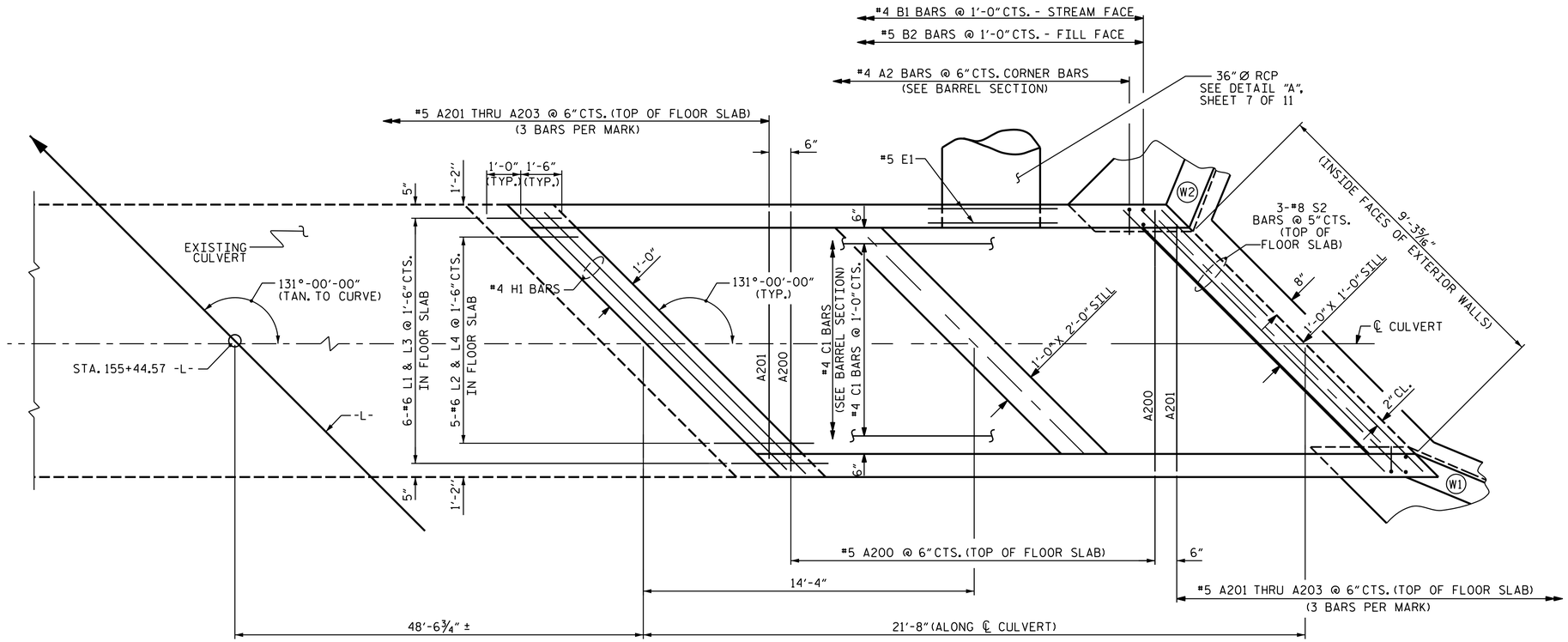

PLAN - FLOOR SLAB

NOTE : FOR S1 BARS IN FLOOR SLAB & WING FOOTINGS, SEE WING SHEET.

NOTES

MATERIAL EXCAVATED FROM THE EXISTING BED SHALL BE STOCKPILED FOR USE IN THE PROPOSED CULVERT AS SHOWN IN THE "PLAN - FLOOR SLAB". BED MATERIAL SHALL BE SUPPLEMENTED WITH CLASS "B" RIP RAP AS NECESSARY. BED MATERIAL SHALL BE SUBJECT TO APPROVAL BY THE ENGINEER.

THE ENTIRE COST OF WORK REQUIRED TO PLACE THE EXCAVATED MATERIAL OR SUPPLEMENTAL MATERIAL AS SHOWN ON THE PLANS SHALL BE INCLUDED IN THE CONTRACT LUMP SUM PRICE BID FOR CULVERT EXCAVATION.

THE ENTIRE COST OF WORK REQUIRED TO CONSTRUCT THE SILLS SHALL BE INCLUDED IN THE VARIOUS PAY ITEMS.

THE STOCKPILED MATERIAL SHALL BE PLACED IN THE BARREL TO BE LEVEL WITH THE TOPS OF THE SILLS.

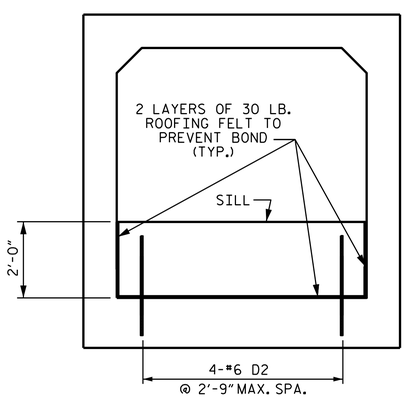

2'-0" HIGH SILL ELEVATION

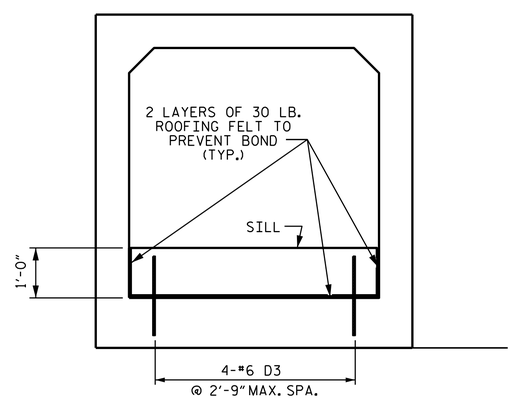

1'-0" HIGH SILL ELEVATION

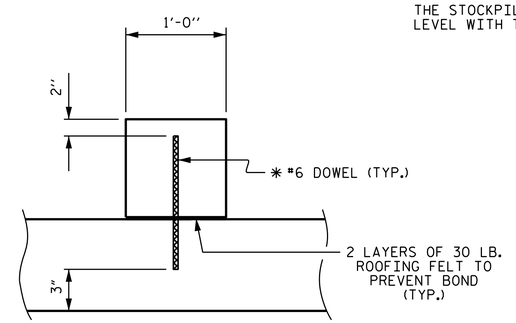

SECTION THROUGH SILL

CULVERT SILL DETAILS

* DOWELS MAY BE PUSHED INTO GREEN CONCRETE AFTER SLAB HAS BEEN FLOAT FINISHED.

PROJECT NO. R-2519B
YANCEY COUNTY
STATION: 155+44.57 -L-

SHEET 8 OF 11

STATE OF NORTH CAROLINA
DEPARTMENT OF TRANSPORTATION
RALEIGH

SINGLE 7 FT. X 7 FT. CONCRETE BOX CULVERT RIGHT EXTENSION

NORTH CAROLINA PROFESSIONAL SEAL 20125 ENGINEER MARSHALL G. CHECK, JR.

8/27/2014 Marshall G. Check, Jr.

REVISIONS						SHEET NO.
NO.	BY:	DATE:	NO.	BY:	DATE:	C-37
1			3			TOTAL SHEETS
2			4			87

STR. #9

ASSEMBLED BY : A. SORSENGINH/JRM DATE : 5/2013
CHECKED BY : H. KIM/WJH DATE : 7/2013
DESIGN ENG. OF RECORD: M.A. LEBLANC DATE : 10/2013

REVISED 8-28-92 BY E.L.R. CHECKED BY G.R.P.
REVISED 8-22-89 BY A.R.B. CHECKED BY C.R.K.
REDRAWN 8-22-89
REVISED 11-19-99 BY M.M. CHECKED BY R.W.W.