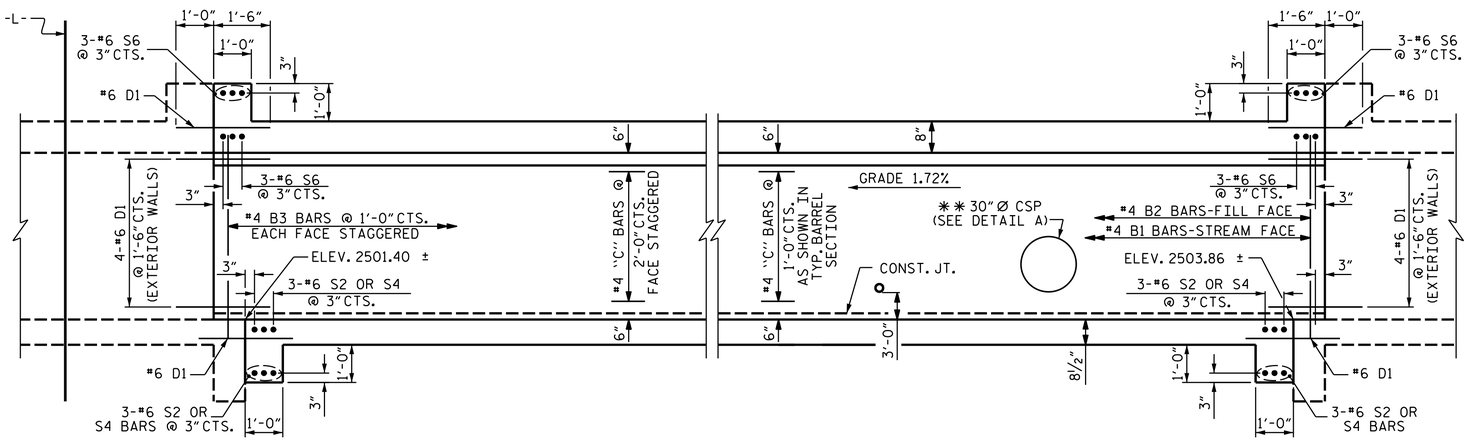

INTERIOR WALL

EXTERIOR WALL

CULVERT SECTION NORMAL TO ROADWAY

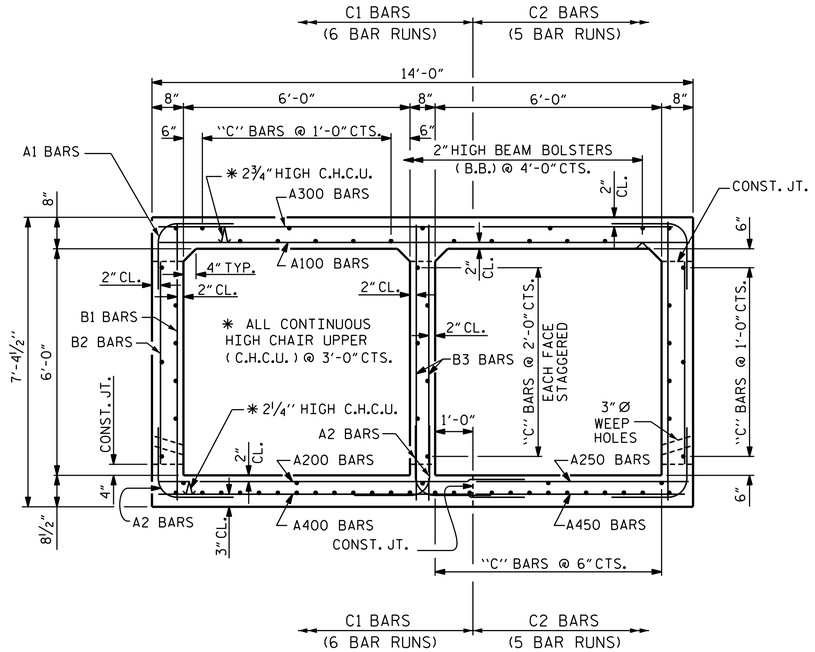

RIGHT ANGLE SECTION OF BARREL

THERE ARE 68 "C" BARS IN SECTION OF BARREL
(LOOKING DOWNSTREAM)

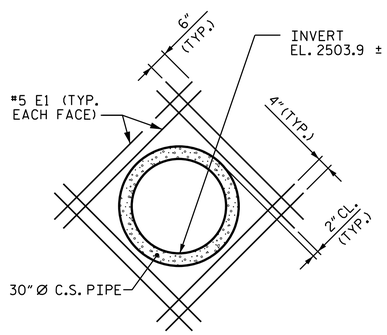

DETAIL A

** THE PIPE THROUGH THE WALL OF THE CULVERT WILL BE LOCATED BY THE ENGINEER. THE REINFORCING STEEL WILL BE CUT & FIELD BENT AS NECESSARY TO CLEAR THE PIPE.

PROJECT NO. R-2519B
YANCEY COUNTY
STATION: 134+80.45 -L-

SHEET 8 OF 12

STATE OF NORTH CAROLINA
DEPARTMENT OF TRANSPORTATION
RALEIGH

DOUBLE 6 FT. X 6 FT. CONCRETE BOX CULVERT
MIDDLE EXTENSION

NORTH CAROLINA PROFESSIONAL SEAL 20125 ENGINEER MARSHALL G. CHEEK, JR.

8/27/2014

REVISIONS								SHEET NO.
NO.	BY:	DATE:	NO.	BY:	DATE:			C-25
1			3					TOTAL SHEETS
2			4					87

DRAWN BY : A. SORSENGINH/MEP DATE : 9/2013
CHECKED BY : D. HODGE DATE : 10/13
DESIGN ENGINEER OF RECORD: M.A. LEBLANC DATE : 10/13

$$$$$$SYSTIME$$$$$
$$$$$$$$$$$$$$$$$$$$$$$$DGN$$$$$$$$$$$$$$$$$$$$$$$$
$$$$USERNAME$$$$

STR #8