DocuSign Envelope ID: CEA55AD4-4441-4130-B669-B599833E5794

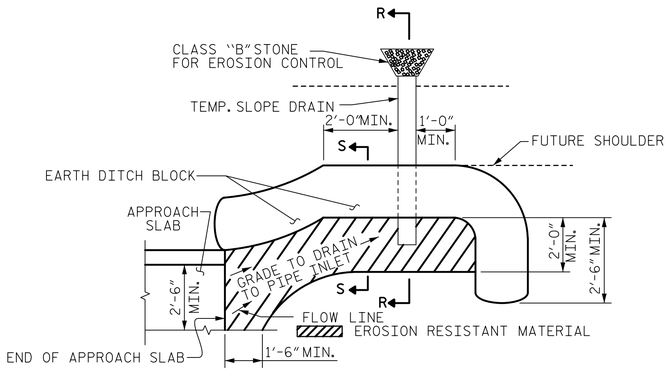

NOTE: IMMEDIATELY AFTER THE CONSTRUCTION OF THE APPROACH SLAB, THE CONTRACTOR SHALL PROVIDE TEMPORARY BERM AND SLOPE DRAIN. CONTRACTOR SHALL GRADE TO PIPE INLET AND PROVIDE EROSION RESISTANT MATERIAL AS SHOWN. THE EROSION RESISTANT MATERIAL SHALL BE EITHER 1) ASPHALT PLANT MIX, TYPE 1 OR TYPE 2, MIN. 2" DEPTH, 2) EROSION CONTROL MAT, OR 3) CONCRETE, AS DIRECTED BY THE ENGINEER. THE SLOPE DRAIN SHALL CONSIST OF A NON-PERFORATED TEMPORARY DRAINAGE PIPE, 12 INCHES IN DIAMETER.

PLAN VIEW

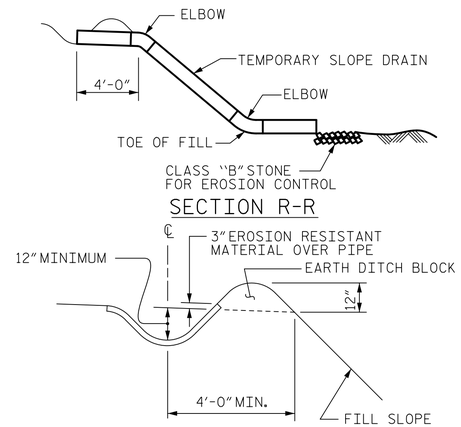

SECTION S-S

TEMPORARY BERM AND SLOPE DRAIN DETAILS

(TO BE USED WHEN SHOULDER BERM GUTTER IS REQUIRED)

NOTES

APPROACH SLAB SHALL NOT BE CONSTRUCTED PRIOR TO COMPLETION OF THE BRIDGE DECK.

AREA BETWEEN THE WINGWALL AND APPROACH SLAB SHALL BE GRADED TO DRAIN THE WATER AWAY FROM THE FILL FACE OF THE BRIDGE AND SHALL BE PAVED. SEE ROADWAY PLANS.

FOR EXPANSION JOINT SEALS, SEE SPECIAL PROVISIONS.

★ FOR PLACEMENT OF #4 J1 BARS, SEE "EXPANSION JOINT SEAL DETAILS" SHEET.

TEMPORARY DRAINAGE AND TEMPORARY BERM AND SLOPE DRAINS WILL BE PAID FOR UNDER THE LUMP SUM PRICE FOR BRIDGE APPROACH SLABS.

BILL OF MATERIAL

FOR ONE APPROACH SLAB (2 REQ'D)

BAR	NO.	SIZE	TYPE	LENGTH	WEIGHT
✳ A1	25	4	STR.	23'-6"	392
A2	26	4	STR.	23'-6"	408
✳ B1	74	5	STR.	23'-10"	1840
B2	74	6	STR.	24'-8"	2742
✳ B3	4	5	STR.	9'-8"	40
B4	4	6	STR.	9'-8"	58
✳ J1	41	4	1	1'-5"	39
REINFORCING STEEL ✳✳					3,208 LBS.
✳ EPOXY COATED REINFORCING STEEL ✳✳					2,311 LBS.
CLASS AA CONCRETE ✳✳					41.4 C. Y.

BAR TYPE

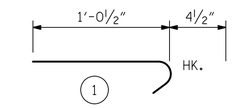

ALL BAR DIMENSIONS ARE OUT TO OUT

✳✳ QUANTITIES FOR BARRIER RAIL ARE NOT INCLUDED. SEE SHEET 3 OF 3.

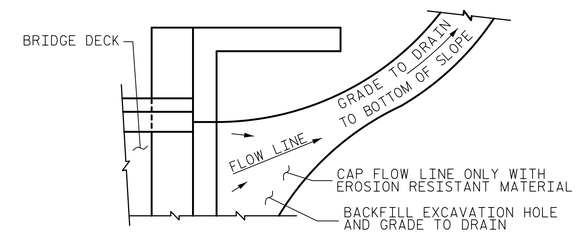

NOTE: IF THE APPROACH SLAB IS NOT CONSTRUCTED IMMEDIATELY AFTER THE BACKFILLING OF THE END BENT EXCAVATION, GRADE TO DRAIN TO THE BOTTOM OF THE SLOPE AND PROVIDE EROSION RESISTANT MATERIAL, SUCH AS FIBERGLASS ROVING OR AS DIRECTED BY THE ENGINEER TO PREVENT SOIL EROSION AND TO PROTECT THE AREA ADJACENT TO THE STRUCTURE. THE CONTRACTOR WILL BE REQUIRED TO REMOVE THESE MATERIALS PRIOR TO CONSTRUCTION OF THE APPROACH SLAB.

TEMPORARY DRAINAGE DETAIL

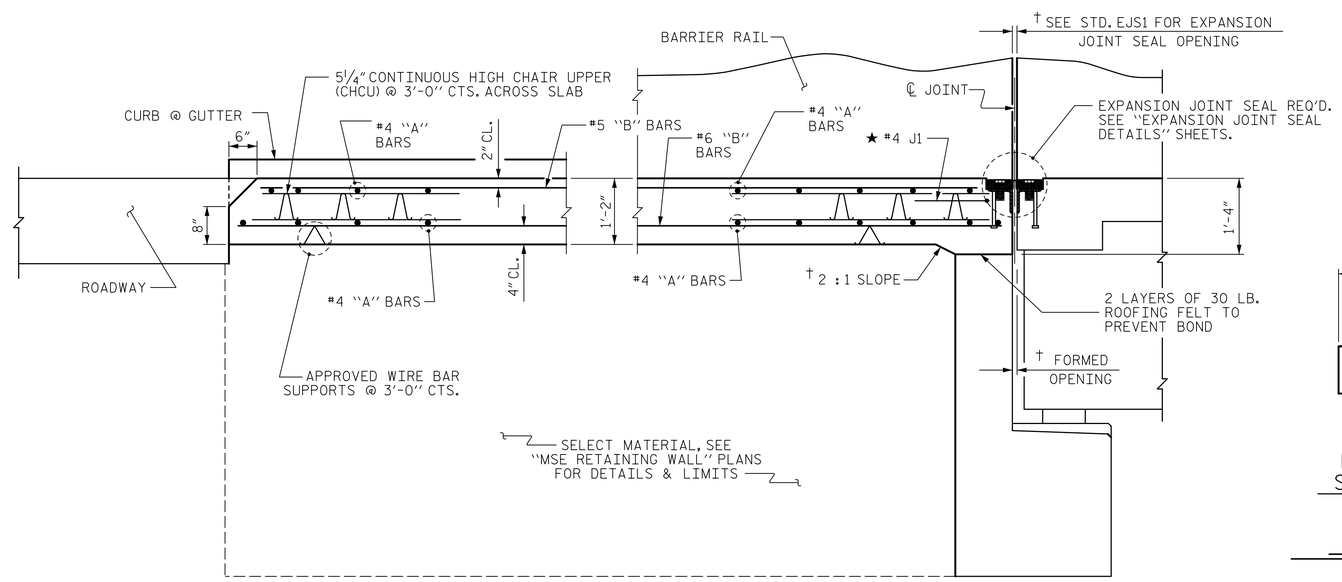

† NORMAL TO END BENT

SECTION THRU SLAB

(BACKWALL RESTRAINTS ON END BENT NOT SHOWN FOR CLARITY)

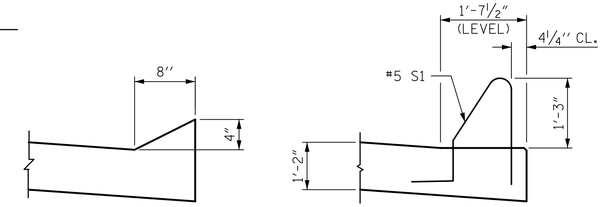

SECTION N-N

SECTION K-K

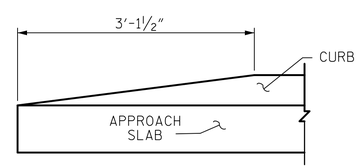

END OF CURB WITHOUT SHOULDER BERM GUTTER

CURB DETAILS

SPLICE LENGTH CHART		
SIZE	EPOXY COATED	UNCOATED
#4	2'-0"	1'-9"
#5	2'-6"	2'-2"
#6	3'-10"	2'-7"

PROJECT NO. R-2519B

YANCEY/MITCHELL COUNTY

STATION: 247+87.50 -L-

SHEET 2 OF 3

STATE OF NORTH CAROLINA
DEPARTMENT OF TRANSPORTATION
RALEIGH

STANDARD

BRIDGE APPROACH SLAB FOR FLEXIBLE PAVEMENT

(RIGHT LANE)

Prepared by
URS
URS Corporation - North Carolina
1600 Perimeter Park Drive, Suite 400
Morrisville, NC 27560
PHONE: 919) 461-1100 FAX: 919) 461-1415
NC LIC.# C-2243

8/21/2014
NORTH CAROLINA PROFESSIONAL SEAL 039173 ENGINEER MATTHEW K. TOM
DocuSigned by: Matthew K. Tom
D8969F4882B747E...

ASSEMBLED BY :	M. K. TOM	DATE : 12/10/12
CHECKED BY :	R. L. WHITCHER	DATE : 4/25/13
DESIGNED BY :	M. K. TOM	DATE : 12/10/12

DRAWN BY : RH 5/99	REV. 5/1/06 RR	KMM/GM
CHECKED BY : RDR 5/99	REV. 10/1/11	MAA/GM
	REV. 12/21/11	MAA/GM

REVISIONS							SHEET NO.
NO.	BY:	DATE:	NO.	BY:	DATE:		S-193
1			3				TOTAL SHEETS
2			4				194

STD. NO. BAS2

STR. #6

8/20/2014
P:\Jobs1\R2519B\Structures\Electronic Signed Plans\Str 6\406_061_S06_R2519B_AS_02.dgn
kyle_compton