DocuSign Envelope ID: CEA55AD4-4441-4130-B669-B599833E5794

SUPERSTRUCTURE REINFORCING STEEL LENGTHS ARE BASED ON THE FOLLOWING MINIMUM SPLICE LENGTHS					
BAR SIZE	SUPERSTRUCTURE EXCEPT APPROACH SLABS, PARAPET, AND BARRIER RAIL		APPROACH SLABS		PARAPET AND BARRIER RAIL
	EPOXY COATED	UNCOATED	EPOXY COATED	UNCOATED	
#4	2'-0"	1'-9"	2'-0"	1'-9"	2'-9"
#5	2'-6"	2'-2"	2'-6"	2'-2"	3'-5"
#6	3'-0"	2'-7"	3'-10"	2'-7"	4'-4"
#7	5'-3"	3'-6"			
#8	6'-10"	4'-7"			

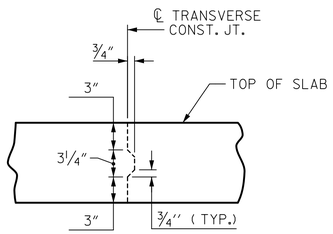

TRANSVERSE CONSTRUCTION JOINT DETAIL

NOTE: REINFORCING STEEL IN SLAB NOT SHOWN. LONGITUDINAL AND LATERAL REINFORCING STEEL SHALL BE CONTINUOUS THRU JOINT

BILL OF MATERIAL

BAR	NO.	SIZE	TYPE	LENGTH	WEIGHT	BAR	NO.	SIZE	TYPE	LENGTH	WEIGHT	BAR	NO.	SIZE	TYPE	LENGTH	WEIGHT
✳ A1	349	5	STR.	38'-11"	14166	✳ A136	2	5	STR.	10'-3"	21	A227	2	5	STR.	17'-5"	36
A2	349	5	STR.	38'-11"	14166	✳ A137	2	5	STR.	9'-6"	20	A228	2	5	STR.	16'-8"	35
✳ A3	6	5	STR.	16'-6"	103	✳ A138	2	5	STR.	8'-8"	18	A229	2	5	STR.	15'-10"	33
						✳ A139	2	5	STR.	7'-11"	17	A230	2	5	STR.	15'-1"	31
✳ A101	2	5	STR.	38'-1"	79	✳ A140	2	5	STR.	7'-1"	15	A231	2	5	STR.	14'-3"	30
✳ A102	2	5	STR.	37'-3"	78	✳ A141	2	5	STR.	6'-4"	13	A232	2	5	STR.	13'-6"	28
✳ A103	2	5	STR.	36'-6"	76	✳ A142	2	5	STR.	5'-6"	11	A233	2	5	STR.	12'-8"	26
✳ A104	2	5	STR.	35'-8"	74	✳ A143	2	5	STR.	4'-9"	10	A234	2	5	STR.	11'-11"	25
✳ A105	2	5	STR.	34'-11"	73	✳ A144	2	5	STR.	3'-11"	8	A235	2	5	STR.	11'-1"	23
✳ A106	2	5	STR.	34'-1"	71	✳ A145	2	5	STR.	3'-2"	7	A236	2	5	STR.	10'-3"	21
✳ A107	2	5	STR.	33'-4"	70	✳ A146	2	5	STR.	2'-4"	5	A237	2	5	STR.	9'-6"	20
✳ A108	2	5	STR.	32'-6"	68	✳ A147	2	5	STR.	1'-7"	3	A238	2	5	STR.	8'-8"	18
✳ A109	2	5	STR.	31'-9"	66							A239	2	5	STR.	7'-11"	17
✳ A110	2	5	STR.	30'-11"	64	A201	2	5	STR.	38'-1"	79	A240	2	5	STR.	7'-1"	15
✳ A111	2	5	STR.	30'-2"	63	A202	2	5	STR.	37'-3"	78	A241	2	5	STR.	6'-4"	13
✳ A112	2	5	STR.	29'-4"	61	A203	2	5	STR.	36'-6"	76	A242	2	5	STR.	5'-6"	11
✳ A113	2	5	STR.	28'-7"	60	A204	2	5	STR.	35'-8"	74	A243	2	5	STR.	4'-9"	10
✳ A114	2	5	STR.	27'-9"	58	A205	2	5	STR.	34'-11"	73	A244	2	5	STR.	3'-11"	8
✳ A115	2	5	STR.	27'-0"	56	A206	2	5	STR.	34'-1"	71	A245	2	5	STR.	3'-2"	7
✳ A116	2	5	STR.	26'-2"	55	A207	2	5	STR.	33'-4"	70	A246	2	5	STR.	2'-4"	5
✳ A117	2	5	STR.	25'-4"	53	A208	2	5	STR.	32'-6"	68	A247	2	5	STR.	1'-7"	3
✳ A118	2	5	STR.	24'-7"	51	A209	2	5	STR.	31'-9"	66						
✳ A119	2	5	STR.	23'-9"	50	A210	2	5	STR.	30'-11"	64	✳ B1	196	4	STR.	27'-9"	3633
✳ A120	2	5	STR.	23'-0"	48	A211	2	5	STR.	30'-2"	63	B2	208	5	STR.	47'-2"	10233
✳ A121	2	5	STR.	22'-2"	46	A212	2	5	STR.	29'-4"	61						
✳ A122	2	5	STR.	21'-5"	45	A213	2	5	STR.	28'-7"	60	✳ G1	2	5	STR.	44'-11"	94
✳ A123	2	5	STR.	20'-7"	43	A214	2	5	STR.	27'-9"	58						
✳ A124	2	5	STR.	19'-10"	41	A215	2	5	STR.	27'-0"	56	✳ J1	82	4	1	1'-5"	78
✳ A125	2	5	STR.	19'-0"	40	A216	2	5	STR.	26'-2"	55						
✳ A126	2	5	STR.	18'-3"	38	A217	2	5	STR.	25'-4"	53	✳ K1	18	5	STR.	9'-10"	185
✳ A127	2	5	STR.	17'-5"	36	A218	2	5	STR.	24'-7"	51	✳ K2	12	5	2	8'-10"	111
✳ A128	2	5	STR.	16'-8"	35	A219	2	5	STR.	23'-9"	50	✳ K3	12	5	3	8'-6"	106
✳ A129	2	5	STR.	15'-10"	33	A220	2	5	STR.	23'-0"	48						
✳ A130	2	5	STR.	15'-1"	31	A221	2	5	STR.	22'-2"	46	✳ S1	54	4	4	4'-5"	159
✳ A131	2	5	STR.	14'-3"	30	A222	2	5	STR.	21'-5"	45						
✳ A132	2	5	STR.	13'-6"	28	A223	2	5	STR.	20'-7"	43						
✳ A133	2	5	STR.	12'-8"	26	A224	2	5	STR.	19'-10"	41						
✳ A134	2	5	STR.	11'-11"	25	A225	2	5	STR.	19'-0"	40	REINFORCING STEEL					26,342 LBS.
✳ A135	2	5	STR.	11'-1"	23	A226	2	5	STR.	18'-3"	38	✳ EPOXY COATED REINF. STEEL					20,577 LBS.

BAR TYPES

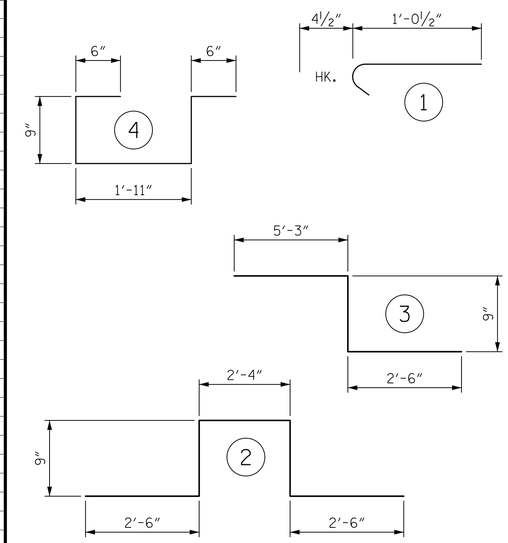

ALL BAR DIMENSIONS ARE OUT TO OUT

SUPERSTRUCTURE BILL OF MATERIAL

	CLASS AA CONCRETE	REINFORCING STEEL	EPOXY COATED REINFORCING STEEL
	(CU. YDS.)	(LBS.)	(LBS.)
POUR #1	226.2	———	———
POUR #2	12.8	———	———
TOTAL ✳✳	239.0	26,342	20,577

✳✳ QUANTITIES FOR BARRIER RAIL ARE NOT INCLUDED

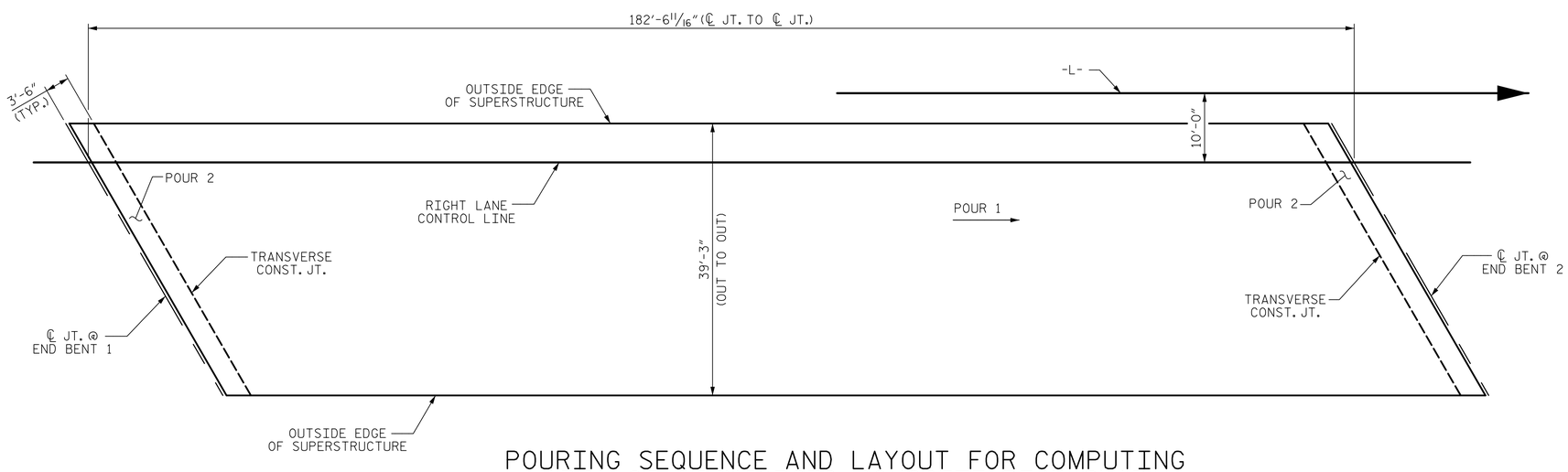

POURING SEQUENCE AND LAYOUT FOR COMPUTING AREA OF REINFORCED CONCRETE DECK SLAB

(SQ. FT. = 7,160)

GROOVING BRIDGE FLOORS		
APPROACH SLABS	1,575	SQ. FT.
BRIDGE DECK	5,979	SQ. FT.
TOTAL	7,554	SQ. FT.

PROJECT NO. R-2519B
YANCEY/MITCHELL COUNTY
STATION: 247+87.50 -L-

Prepared by
URS
URS Corporation - North Carolina
1600 Perimeter Park Drive, Suite 400
Morrisville, NC 27560
PHONE: 919 461-1100 FAX: 919 461-1415
NC LIC.# C-2243

8/21/2014
NORTH CAROLINA PROFESSIONAL SEAL 039173 ENGINEER MATTHEW K. TOM
DocuSigned by: Matthew K. Tom
D8989F4B82B74TE...

STATE OF NORTH CAROLINA
DEPARTMENT OF TRANSPORTATION
RALEIGH
SUPERSTRUCTURE

BILL OF MATERIAL

(RIGHT LANE)

REVISIONS						SHEET NO.
NO.	BY:	DATE:	NO.	BY:	DATE:	S-183
1			3			TOTAL SHEETS
2			4			194

STR. #6

DRAWN BY : M. K. TOM DATE : 2/7/13
CHECKED BY : R. L. WHITCHER DATE : 4/25/13
DESIGNED BY : M. K. TOM DATE : 12/5/12

8/20/2014
P:\Jobs1\R2519B\Structures\Electronic Signed Plans\Str 6\406_041_S06_R2519B_BM.dgn
kyle_compton