DocuSign Envelope ID: CEA55AD4-4441-4130-B669-B599833E5794

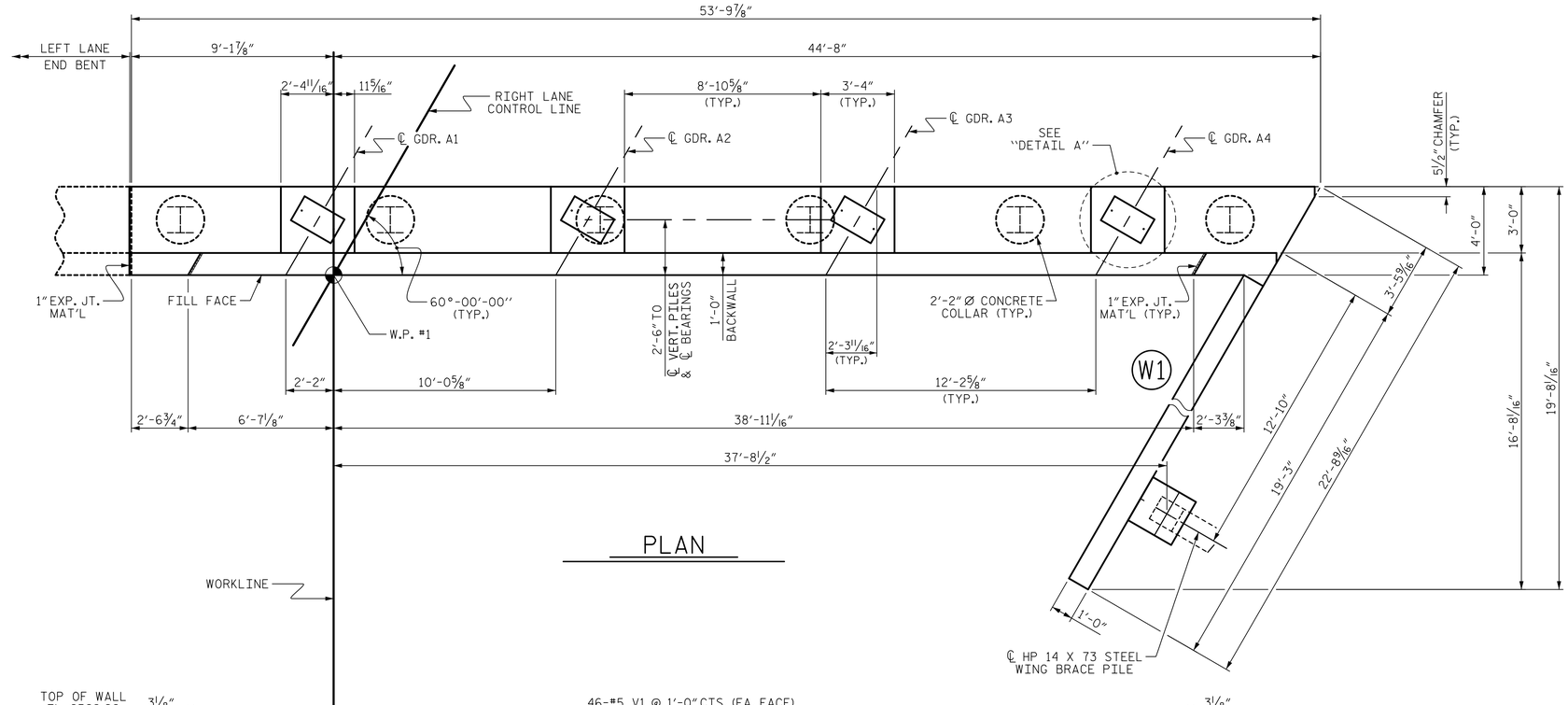

NOTES

▲ FOR LOCATION OF ELEVATIONS BETWEEN BUILDUPS, SEE SECTION A-A ON SHEET 3 OF 3.

★ THIS ELEVATION TAKEN ON FILL FACE OF BACKWALL.

STIRRUPS AND "U" BARS IN CAP MAY BE SHIFTED AS NECESSARY TO CLEAR ANCHOR BOLTS.

SEE ADDITIONAL NOTES SHEET 3 OF 3.

FOR PIPE INSERT DETAILS, SEE BEARING SHEET.

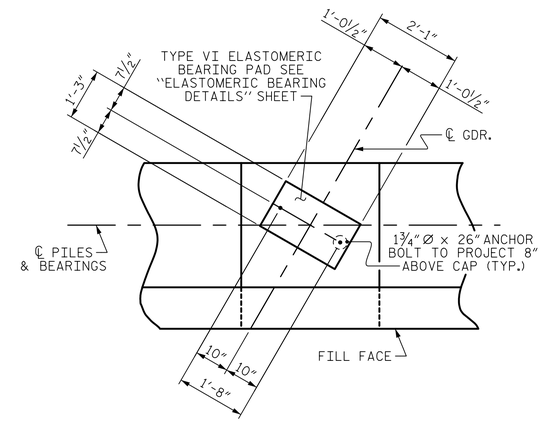

DETAIL "A"

(TYP. EA. BRG.)

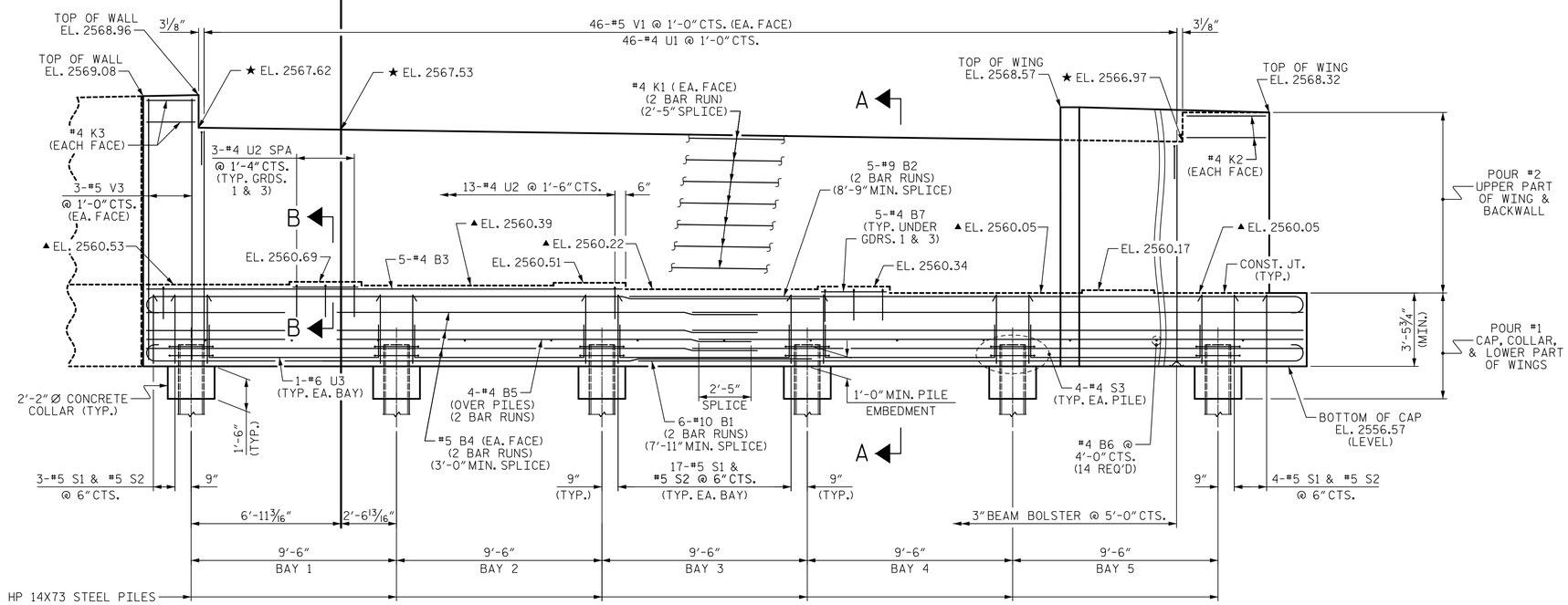

ELEVATION

WING BRACE PILE NOT SHOWN FOR CLARITY

PROJECT NO. R-2519B
YANCEY/MITCHELL COUNTY
STATION: 247+87.50 -L-

SHEET 1 OF 3

STATE OF NORTH CAROLINA
DEPARTMENT OF TRANSPORTATION
RALEIGH

SUBSTRUCTURE

END BENT 1

(RIGHT LANE)

REVISIONS						SHEET NO.
NO.	BY:	DATE:	NO.	BY:	DATE:	S-184
1			3			TOTAL SHEETS
2			4			194

STR. #6

Prepared by
URS
URS Corporation - North Carolina
1600 Perimeter Park Drive, Suite 400
Morrisville, NC 27560
PHONE: 919) 461-1100 FAX: 919) 461-1415
NC LIC.# C-2243

8/21/2014
NORTH CAROLINA PROFESSIONAL SEAL 039173 ENGINEER MATTHEW K. TOM

DocuSigned by: Matthew K. Tom
D8969F468B2874E...

DRAWN BY :	M. K. TOM	DATE :	3/19/13
CHECKED BY :	K. H. COMPTON	DATE :	4/17/13
DESIGNED BY :	M. K. TOM	DATE :	12/12/12

8/20/2014
P:\Jobs1\R2519B\Structures\Electronic Signed Plans\Str 6\406_043_S06_R2519B_EB1_01.dgn
kyle_compton