DocuSign Envelope ID: CEA55AD4-4441-4130-B669-B599833E5794

NOTES

▲ FOR LOCATION OF ELEVATIONS BETWEEN BUILDUPS SEE SECTION A-A ON SHEET 3 OF 3.

★ THIS ELEVATION TAKEN ON FILL FACE OF BACKWALL.

STIRRUPS AND "U" BARS IN CAP MAY BE SHIFTED AS NECESSARY TO CLEAR ANCHOR BOLTS.

SEE ADDITIONAL NOTES SHEET 3 OF 3.

FOR PIPE INSERT DETAILS, SEE BEARING SHEET.

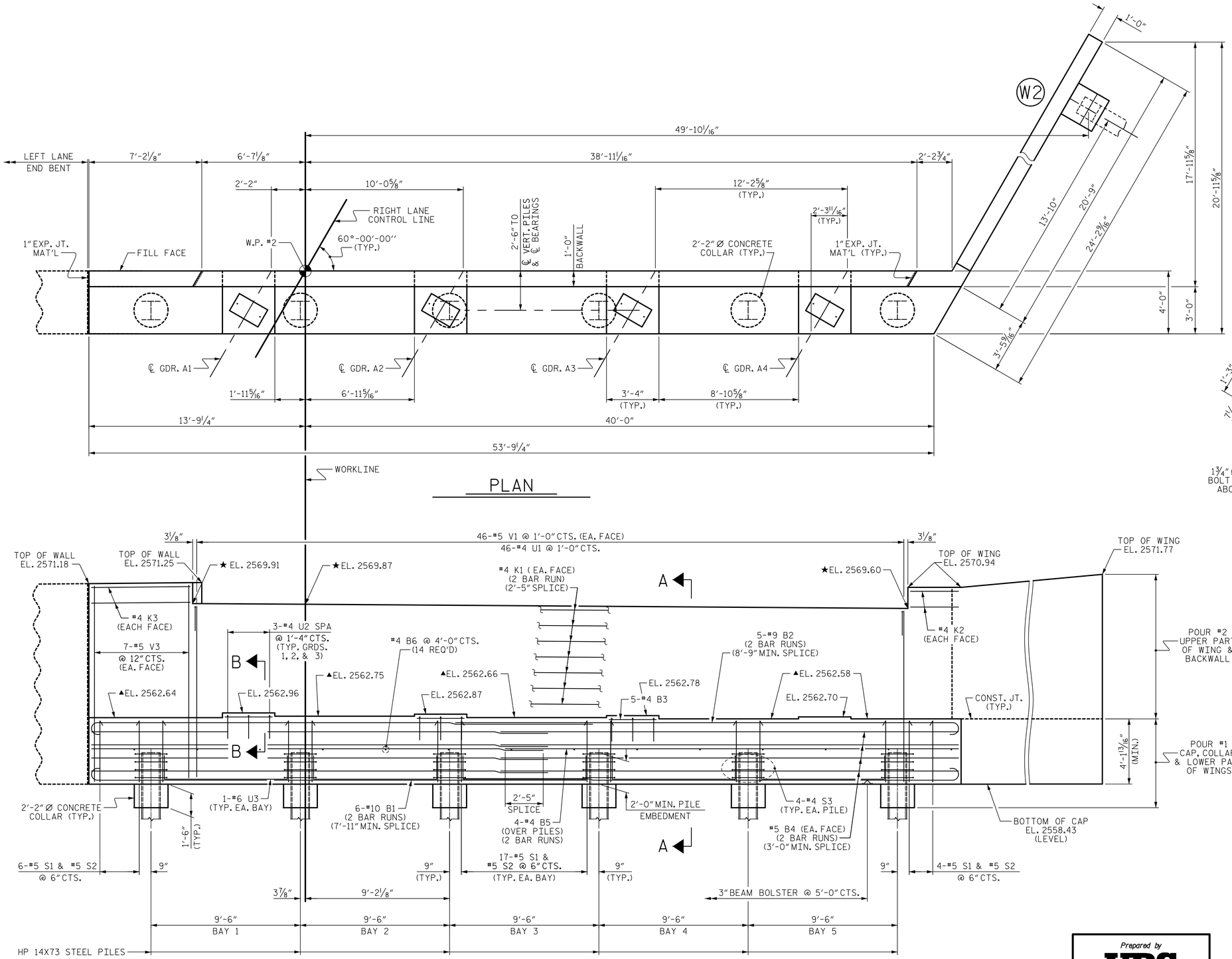

PLAN

ELEVATION

WING BRACE PILE NOT SHOWN FOR CLARITY

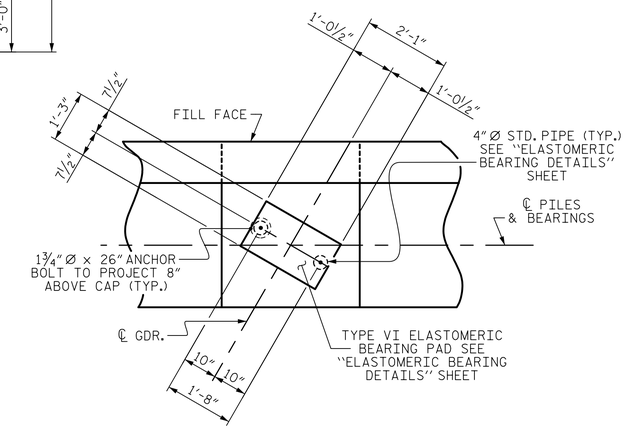

DETAIL "A"

(TYP. EA. BRG.)

PROJECT NO. R-2519B

YANCEY/MITCHELL COUNTY

STATION: 247+87.50 -L-

SHEET 1 OF 3

STATE OF NORTH CAROLINA
DEPARTMENT OF TRANSPORTATION
RALEIGH

SUBSTRUCTURE

END BENT 2

(RIGHT LANE)

Prepared by
URS
URS Corporation - North Carolina
1600 Perimeter Park Drive, Suite 400
Morrisville, NC 27560
PHONE: (919) 461-1100 FAX: (919) 461-1415
NC LIC.# C-2243

8/21/2014
NORTH CAROLINA PROFESSIONAL SEAL 039173 ENGINEER MATTHEW K. TOM

DocuSigned by: Matthew K. Tom
D696F48B2B747E...

REVISIONS								SHEET NO.
NO.	BY:	DATE:	NO.	BY:	DATE:			S-187
1			3					TOTAL SHEETS
2			4					194

DRAWN BY :	M. K. TOM	DATE :	3/19/13
CHECKED BY :	K. H. COMPTON	DATE :	4/19/13
DESIGNED BY :	M. K. TOM	DATE :	12/12/12

8/20/2014
P:\Jobs1\R2519B\Structures\Electronic Signed Plans\Str 6\406_049_S06_R2519B_EB2_01.dgn
kyle_compton

STR. #6