DocuSign Envelope ID: CEA55AD4-4441-4130-B669-B599833E5794

NOTES:

#5 V1 BARS IN BACKWALL SHALL BE PLACED 2" CLEAR FROM TOP OF BACKWALL.

BACKWALL SHALL BE PLACED BEFORE APPLYING THE EPOXY PROTECTIVE COATING.

THE TOP SURFACE OF THE CAP EXCEPT THE BRIDGE SEAT BUILD-UPS SHALL BE SLOPED TRANSVERSELY FROM THE FILL FACE TO THE BACK FACE AT THE RATE OF 2%.

THE TOP SURFACE AREAS OF THE END BENT CAPS SHALL BE CURED IN ACCORDANCE WITH THE STANDARD SPECIFICATIONS EXCEPT THE MEMBRANE CURING COMPOUND METHOD SHALL NOT BE USED.

EPOXY COAT THE END BENT CAP AFTER ADJUSTMENTS ARE MADE TO BEARINGS AND ANCHOR BOLTS ARE GROUTED.

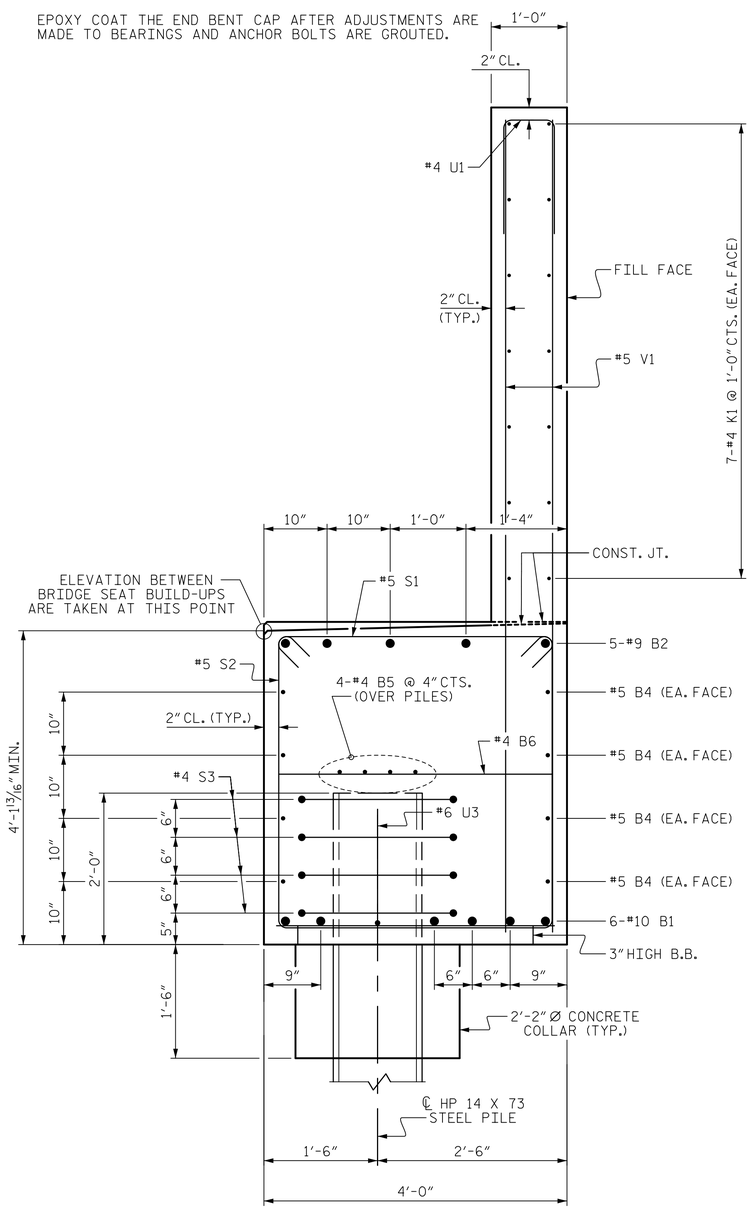

SECTION A-A

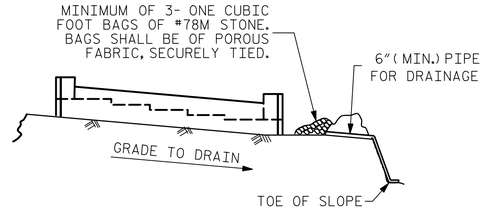

BAGGED STONE AND PIPE SHALL BE PLACED IMMEDIATELY AFTER COMPLETION OF END BENT EXCAVATION. PIPE MAY BE EITHER CONCRETE, CORRUGATED STEEL, CORRUGATED ALUMINUM ALLOY, OR CORRUGATED PLASTIC. PERFORATED PIPE WILL NOT BE ALLOWED.

BAGGED STONE SHALL REMAIN IN PLACE UNTIL THE ENGINEER DIRECTS THAT IT BE REMOVED. THE CONTRACTOR SHALL REMOVE AND DISPOSE OF SILT ACCUMULATIONS AT BAGGED STONE WHEN SO DIRECTED BY THE ENGINEER. BAGS SHALL BE REMOVED AND REPLACED WHENEVER THE ENGINEER DETERMINES THAT THEY HAVE DETERIORATED AND LOST THEIR EFFECTIVENESS.

NO SEPARATE PAYMENT WILL BE MADE FOR THIS WORK AND THE ENTIRE COST OF THIS WORK SHALL BE INCLUDED IN THE UNIT CONTRACT PRICE BID FOR THE SEVERAL PAY ITEMS.

TEMPORARY DRAINAGE AT END BENT

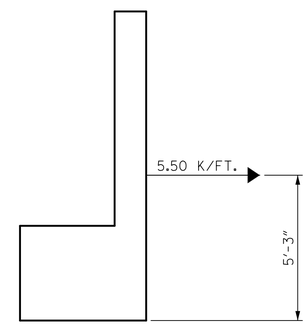

CAP

TIEBACK DETAILS

(DETAIL SHOWING TIEBACK RESTRAINT FOR END BENT 2)

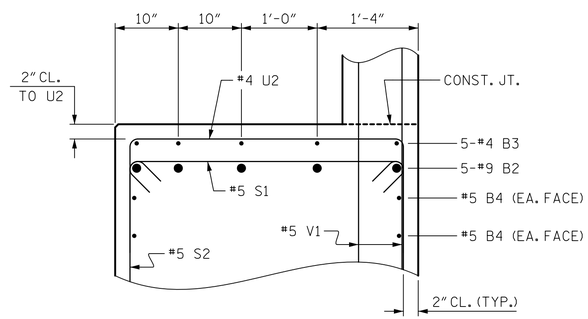

PARTIAL SECTION B-B

BAR TYPES

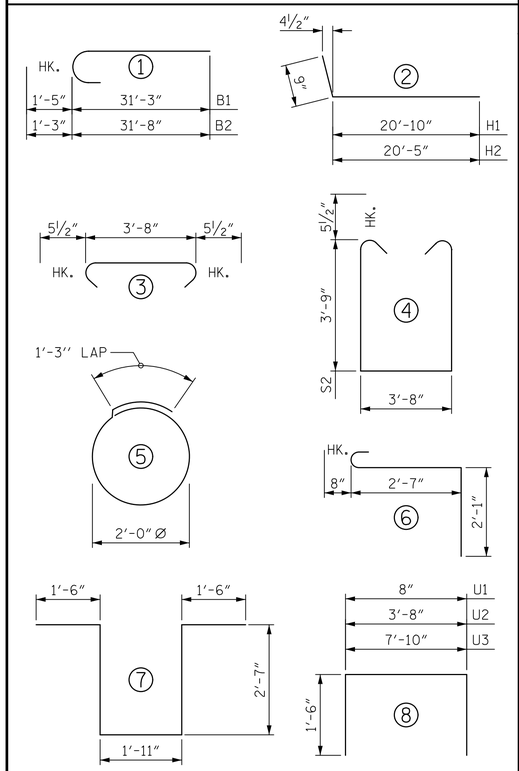

ALL BAR DIMENSIONS ARE OUT TO OUT

BILL OF MATERIAL

END BENT 2

BAR	NO.	SIZE	TYPE	LENGTH	WEIGHT
B1	12	10	1	32'-8"	1687
B2	10	9	1	32'-11"	1119
B3	15	4	STR	3'-0"	30
B4	16	5	STR	28'-10"	481
B5	8	4	STR	28'-6"	152
B6	14	4	STR	3'-8"	34
H1	18	4	2	21'-7"	260
H2	18	4	2	21'-3"	256
K1	28	4	STR	28'-6"	533
K2	4	4	STR	3'-0"	8
K3	4	4	STR	6'-3"	17
S1	95	5	3	4'-7"	454
S2	95	5	4	12'-1"	1197
S3	24	4	5	7'-7"	122
S4	3	6	6	5'-4"	24
S5	3	6	7	10'-1"	45
U1	52	4	8	3'-8"	127
U2	9	4	8	6'-8"	40
U3	5	6	8	10'-10"	81
V1	92	5	STR	10'-10"	1040
V2	50	5	STR	12'-2"	634
V3	14	5	STR	12'-5"	181
REINFORCING STEEL					8,522 LBS.

CLASS A CONCRETE BREAKDOWN	
POUR #1 (COLLAR, CAP & LOWER WING)	39.6 C.Y.
POUR #2 (UPPER WING & BACKWALL)	21.8 C.Y.
TOTAL CLASS A CONCRETE	61.4 C.Y.

HP 14 X 73 STEEL PILES	
NO. = 7	350 LIN. FT.

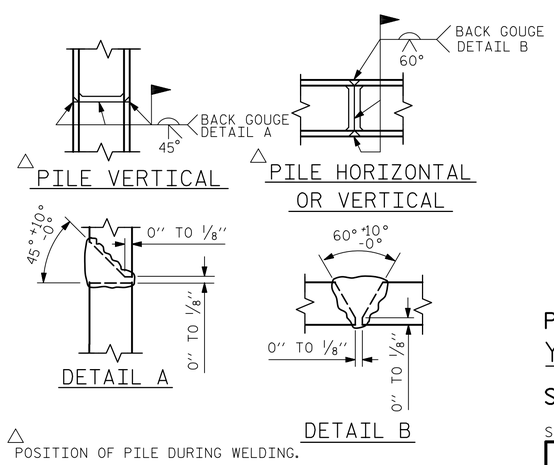

△ POSITION OF PILE DURING WELDING.

PILE SPLICE DETAILS

PROJECT NO. R-2519B
YANCEY/MITCHELL COUNTY
STATION: 247+87.50 -L-

SHEET 3 OF 3

STATE OF NORTH CAROLINA
DEPARTMENT OF TRANSPORTATION
RALEIGH

SUBSTRUCTURE

END BENT 2

(RIGHT LANE)

REVISIONS								SHEET NO.
NO.	BY:	DATE:	NO.	BY:	DATE:			S-189
1			3					TOTAL SHEETS
2			4					194

STR. #6

DRAWN BY : M. K. TOM DATE : 3/19/13
CHECKED BY : K. H. COMPTON DATE : 4/19/13
DESIGNED BY : M. K. TOM DATE : 12/12/12

Prepared by
URS
URS Corporation - North Carolina
1600 Perimeter Park Drive, Suite 400
Morrisville, NC 27560
PHONE: 919) 461-1100 FAX: 919) 461-1415
NC LIC.# C-2243

8/21/2014
NORTH CAROLINA PROFESSIONAL SEAL 039173 ENGINEER MATTHEW K. TOM

DocuSigned by:
Matthew K. Tom
D89B9F4882B747E...

8/20/2014
P:\Jobs1\R2519B\Structures\Electronic Signed Plans\Str 6\406_053_S06_R2519B_EB2_03.dgn
kyle_compton