DocuSign Envelope ID: CEA55AD4-4441-4130-B669-B599833E5794

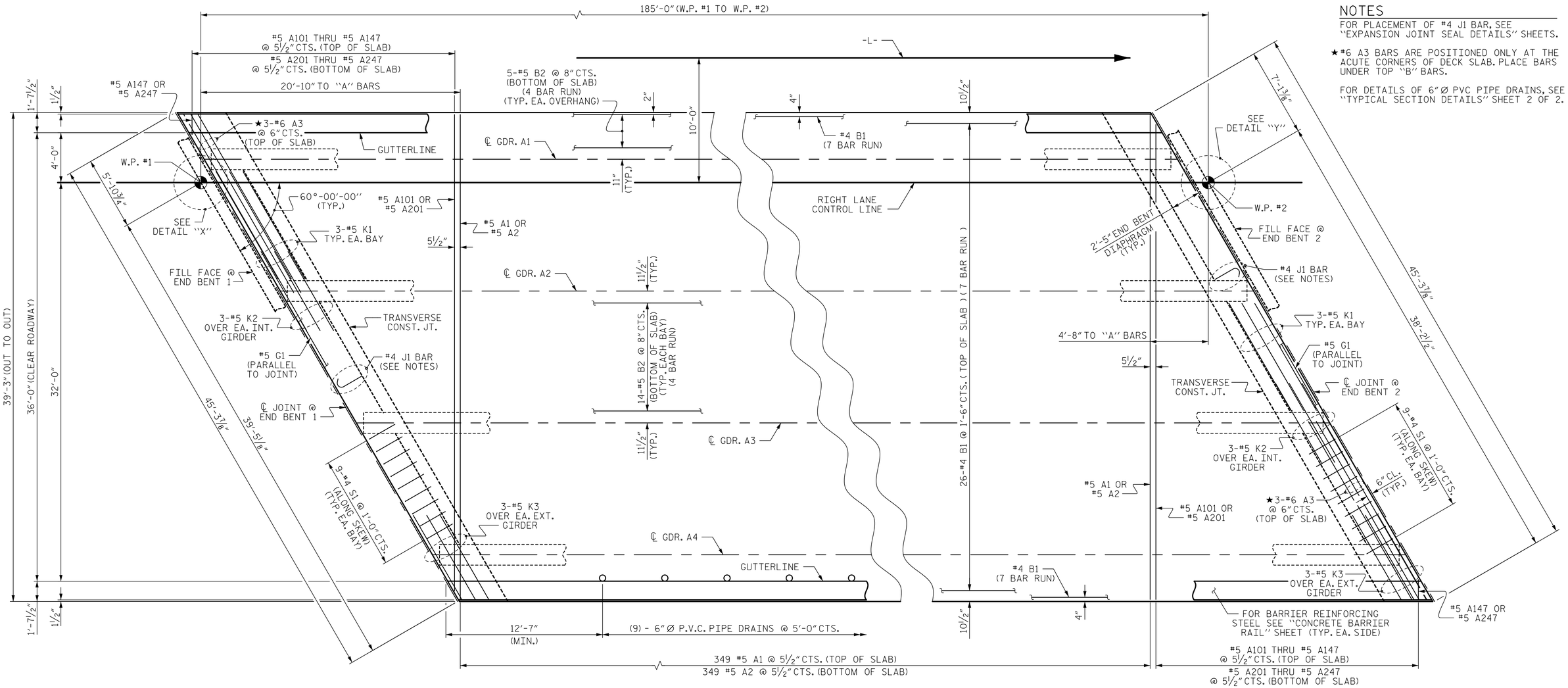

NOTES

FOR PLACEMENT OF #4 J1 BAR, SEE "EXPANSION JOINT SEAL DETAILS" SHEETS.

★ #6 A3 BARS ARE POSITIONED ONLY AT THE ACUTE CORNERS OF DECK SLAB. PLACE BARS UNDER TOP "B" BARS.

FOR DETAILS OF 6" Ø PVC PIPE DRAINS, SEE "TYPICAL SECTION DETAILS" SHEET 2 OF 2.

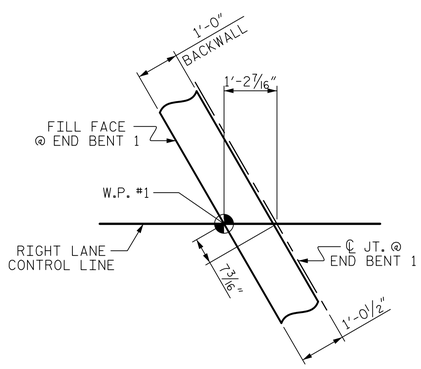

DETAIL "X"

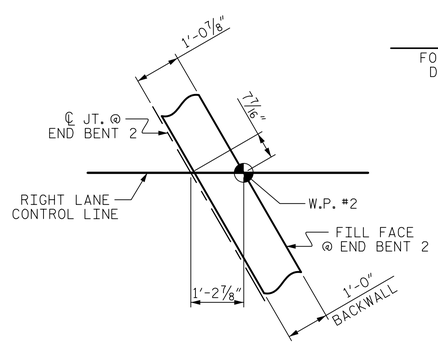

DETAIL "Y"

PLAN OF SPAN A

FOR POURING SEQUENCE AND LOCATION AND DETAILS OF TRANSVERSE CONSTRUCTION JOINT, SEE SUPERSTRUCTURE "BILL OF MATERIAL" SHEET.

PROJECT NO. R-2519B
YANCEY/MITCHELL COUNTY
STATION: 247+87.50 -L-

STATE OF NORTH CAROLINA
DEPARTMENT OF TRANSPORTATION
RALEIGH

SUPERSTRUCTURE

PLAN OF SPAN

(RIGHT LANE)

Prepared by
URS
URS Corporation - North Carolina
1600 Perimeter Park Drive, Suite 400
Morrisville, NC 27560
PHONE: 919) 461-1100 FAX: 919) 461-1415
NC LIC.# C-2243

8/21/2014
NORTH CAROLINA PROFESSIONAL SEAL 039173 ENGINEER MATTHEW K. TOM
DocuSigned by: Matthew K. Tom
D89B6F48B2B747E...

REVISIONS						SHEET NO.
NO.	BY:	DATE:	NO.	BY:	DATE:	S-170
1			3			TOTAL SHEETS
2			4			194

DRAWN BY : M. K. TOM DATE : 2/7/13
CHECKED BY : R. L. WHITCHER DATE : 4/24/13
DESIGNED BY : M. K. TOM DATE : 11/28/12

8/20/2014
P:\Jobs1\R2519B\Structures\Electronic Signed Plans\Str 6\406_015_S06_R2519B_POS.dgn
kyle_compton

STR. #6