DocuSign Envelope ID: CEA55AD4-4441-4130-B669-B599833E5794

NOTES:

#5 V1 BARS IN BACKWALL SHALL BE PLACED 2" CLEAR FROM TOP OF BACKWALL.

THE TOP SURFACE AREAS OF THE END BENT CAPS SHALL BE CURED IN ACCORDANCE WITH THE STANDARD SPECIFICATIONS EXCEPT THE MEMBRANE CURING COMPOUND METHOD SHALL NOT BE USED.

BACKWALL SHALL BE PLACED BEFORE APPLYING THE EPOXY PROTECTIVE COATING.

THE TOP SURFACE OF THE CAP EXCEPT THE BRIDGE SEAT BUILD-UPS SHALL BE SLOPED TRANSVERSELY FROM THE FILL FACE TO THE BACK FACE AT THE RATE OF 2%.

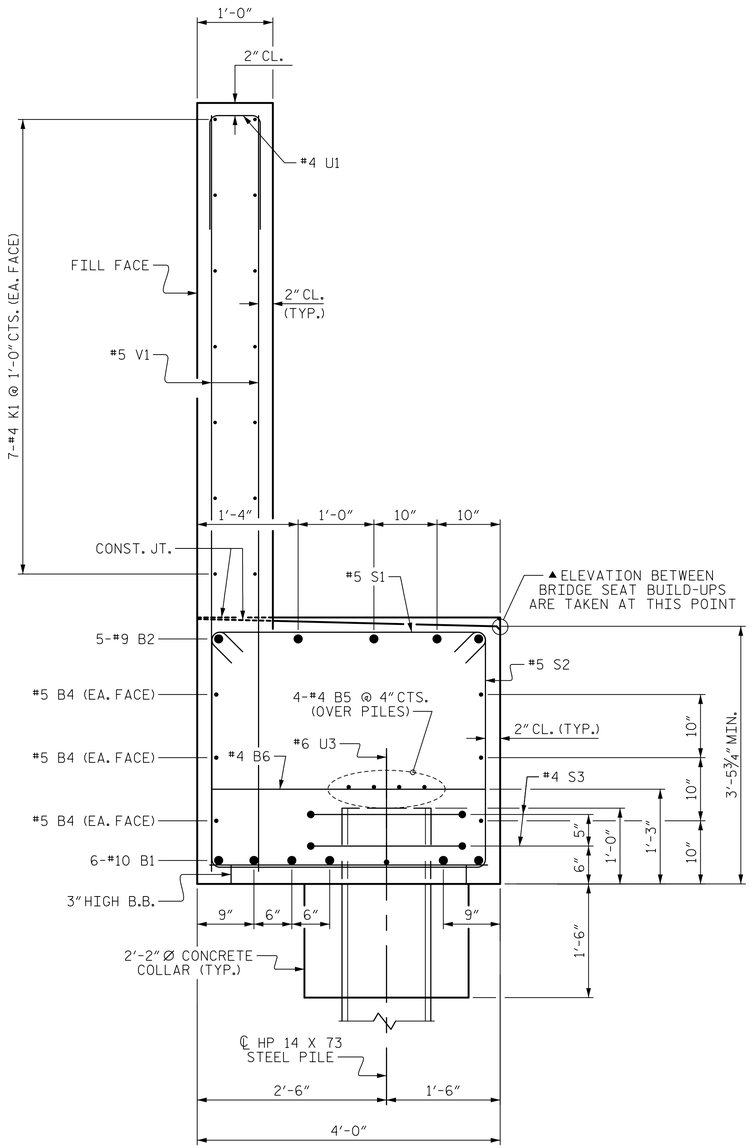

SECTION A-A

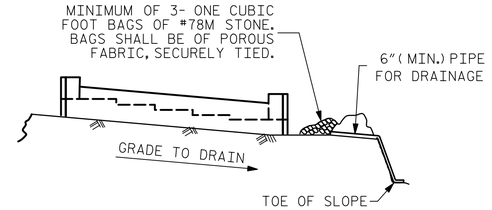

BAGGED STONE AND PIPE SHALL BE PLACED IMMEDIATELY AFTER COMPLETION OF END BENT EXCAVATION. PIPE MAY BE EITHER CONCRETE, CORRUGATED STEEL, CORRUGATED ALUMINUM ALLOY, OR CORRUGATED PLASTIC. PERFORATED PIPE WILL NOT BE ALLOWED.

BAGGED STONE SHALL REMAIN IN PLACE UNTIL THE ENGINEER DIRECTS THAT IT BE REMOVED. THE CONTRACTOR SHALL REMOVE AND DISPOSE OF SILT ACCUMULATIONS AT BAGGED STONE WHEN SO DIRECTED BY THE ENGINEER. BAGS SHALL BE REMOVED AND REPLACED WHENEVER THE ENGINEER DETERMINES THAT THEY HAVE DETERIORATED AND LOST THEIR EFFECTIVENESS.

NO SEPARATE PAYMENT WILL BE MADE FOR THIS WORK AND THE ENTIRE COST OF THIS WORK SHALL BE INCLUDED IN THE UNIT CONTRACT PRICE BID FOR THE SEVERAL PAY ITEMS.

TEMPORARY DRAINAGE AT END BENT

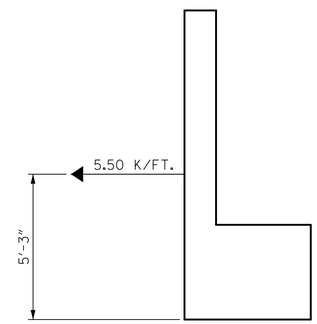

CAP

TIEBACK DETAILS

(DETAIL SHOWING TIEBACK RESTRAINT FOR END BENT 1)

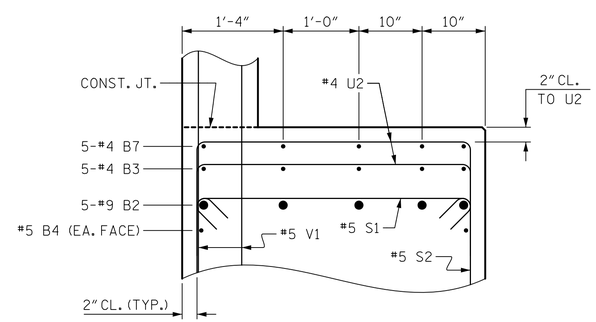

PARTIAL SECTION B-B

BAR TYPES

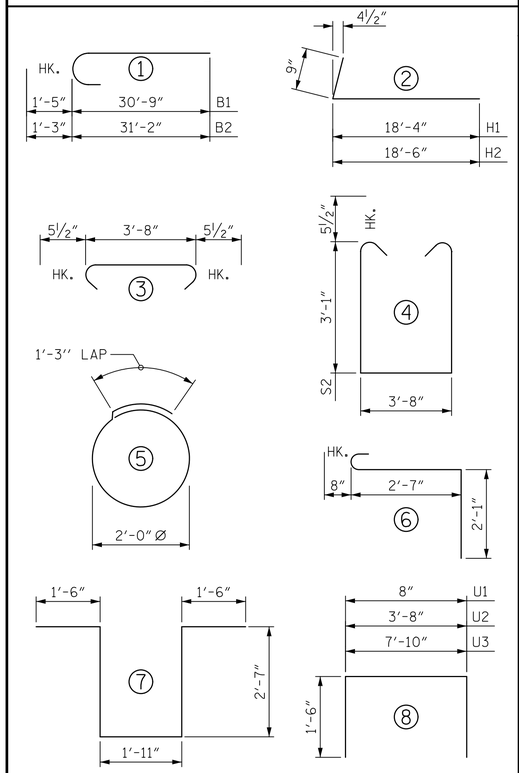

ALL BAR DIMENSIONS ARE OUT TO OUT

BILL OF MATERIAL

END BENT 1

BAR	NO.	SIZE	TYPE	LENGTH	WEIGHT
B1	12	10	1	32'-2"	1661
B2	10	9	1	32'-5"	1102
B3	5	4	STR	21'-11"	73
B4	12	5	STR	28'-3"	354
B5	8	4	STR	28'-0"	150
B6	14	4	STR	3'-8"	34
B7	10	4	STR	3'-0"	20
H1	16	4	2	19'-1"	204
H2	16	4	2	19'-3"	206
K1	28	4	STR	27'-1"	507
K2	4	4	STR	3'-0"	8
K3	4	4	STR	2'-2"	6
S1	92	5	3	4'-7"	440
S2	92	5	4	10'-9"	1032
S3	12	4	5	7'-7"	61
S4	3	6	6	5'-4"	24
S5	3	6	7	10'-1"	45
U1	46	4	8	3'-8"	113
U2	19	4	8	6'-8"	85
U3	5	6	8	10'-10"	81
V1	92	5	STR	10'-0"	960
V2	46	5	STR	11'-4"	544
V3	6	5	STR	12'-0"	75

REINFORCING STEEL 7,785 LBS.

CLASS A CONCRETE BREAKDOWN

POUR #1 (COLLAR, CAP & LOWER WING)	33.1 C.Y.
POUR #2 (UPPER WING & BACKWALL)	19.3 C.Y.
TOTAL CLASS A CONCRETE	52.4 C.Y.

HP 14 X 73 STEEL PILES

NO. = 7 420 LIN. FT.

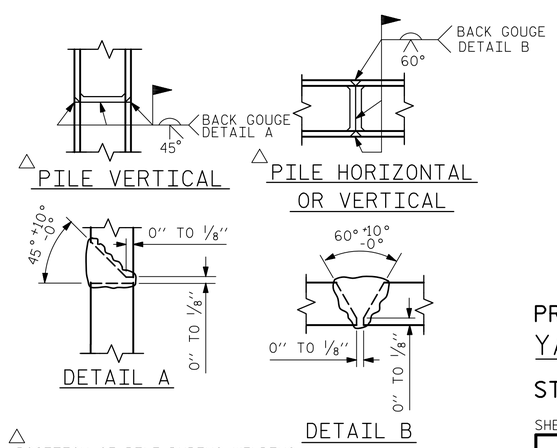

△ POSITION OF PILE DURING WELDING.

PILE SPLICE DETAILS

PROJECT NO. R-2519B
YANCEY/MITCHELL COUNTY
STATION: 247+87.50 -L-

SHEET 3 OF 3

STATE OF NORTH CAROLINA
DEPARTMENT OF TRANSPORTATION
RALEIGH

SUBSTRUCTURE

END BENT 1

(RIGHT LANE)

Prepared by
URS
URS Corporation - North Carolina
1600 Perimeter Park Drive, Suite 400
Morrisville, NC 27560
PHONE: (919) 461-1100 FAX: (919) 461-1415
NC LIC.# C-2243

8/21/2014
NORTH CAROLINA PROFESSIONAL SEAL 039173 ENGINEER MATTHEW K. TOM

DocuSigned by: Matthew K. Tom
D8989F46B2B747E...

REVISIONS							SHEET NO.
NO.	BY:	DATE:	NO.	BY:	DATE:		S-186
1			3				TOTAL SHEETS
2			4				194

DRAWN BY :	M. K. TOM	DATE :	3/19/13
CHECKED BY :	K. H. COMPTON	DATE :	4/18/13
DESIGNED BY :	M. K. TOM	DATE :	12/12/12

8/20/2014
P:\Jobs1\R2519B\Structures\Electronic Signed Plans\Str 6\406_047_S06_R2519B_EB1_03.dgn
kyle_compton

STR. #6