DocuSign Envelope ID: CEA55AD4-4441-4130-B669-B599833E5794

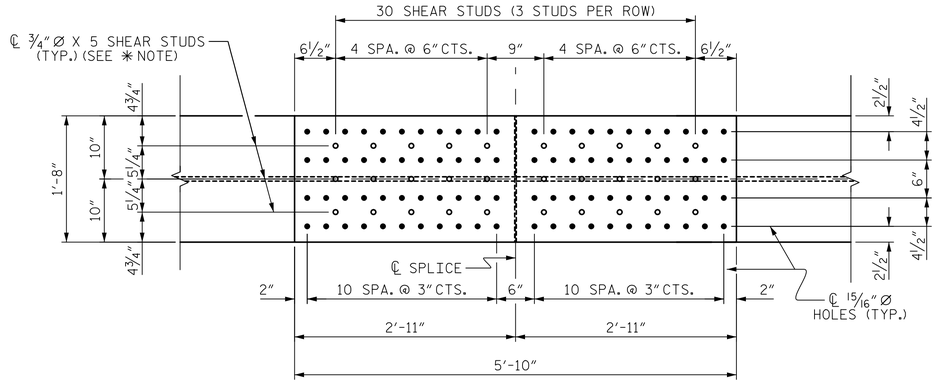

PLAN (TOP OF TOP FLANGE)

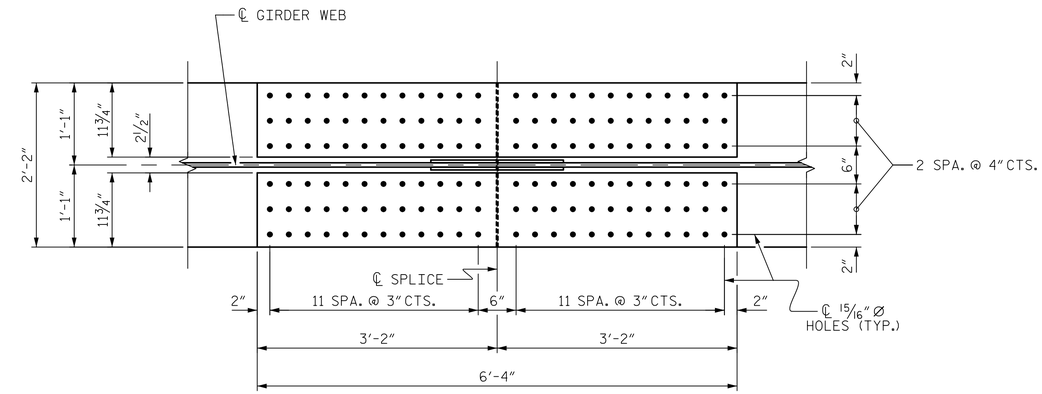

PLAN (TOP OF BOTTOM FLANGE)

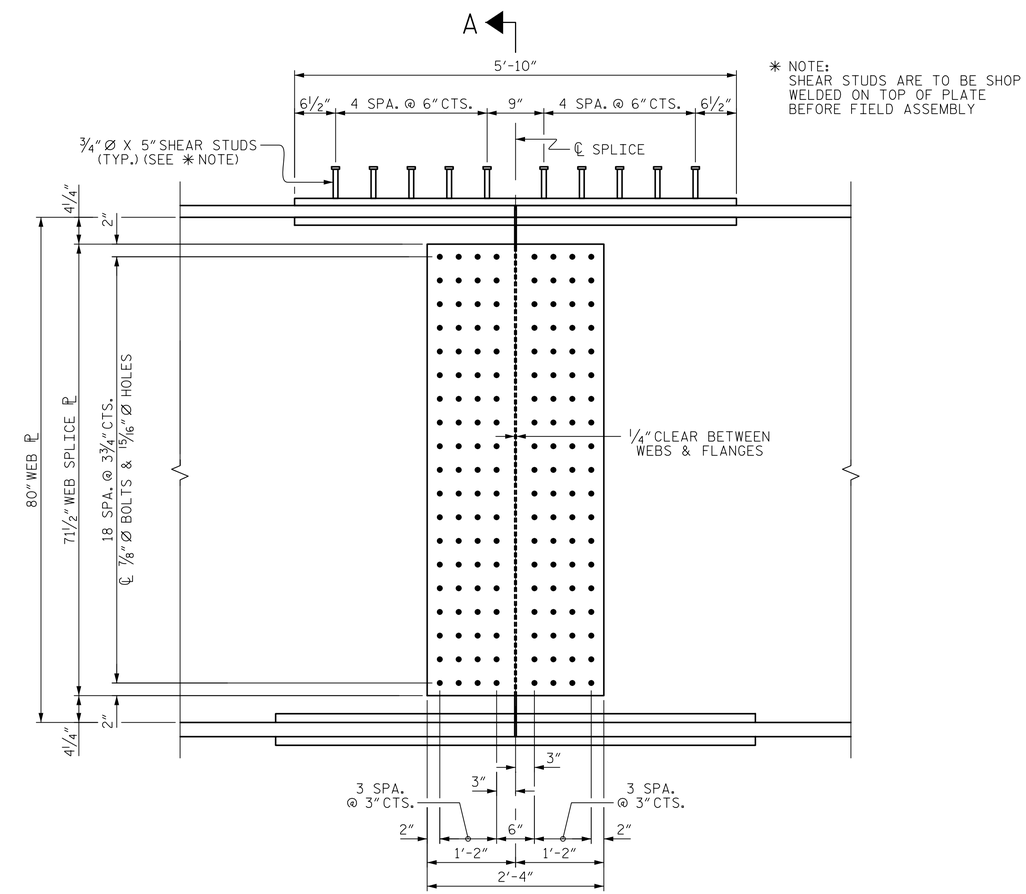

ELEVATION

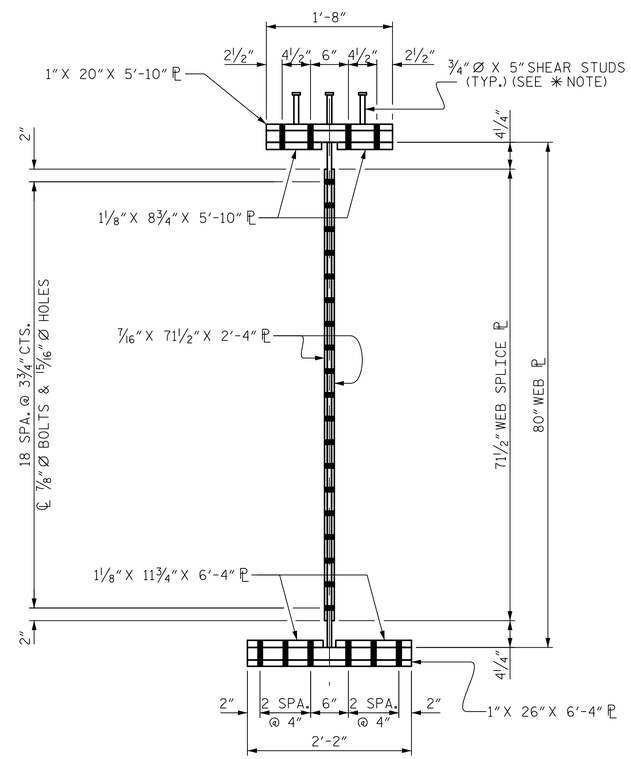

SECTION A-A

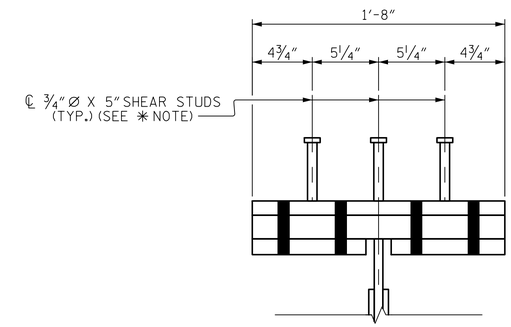

SHEAR STUD DETAIL
FOR TOP FLANGE SPLICE PLATE

BOLTED FIELD SPLICE DETAILS

(TYP. EA. BOLTED FIELD SPLICE)

PROJECT NO. R-2519B
YANCEY/MITCHELL COUNTY
STATION: 247+87.50 -L-

SHEET 2 OF 4

STATE OF NORTH CAROLINA
DEPARTMENT OF TRANSPORTATION
RALEIGH
SUPERSTRUCTURE

STRUCTURAL STEEL DETAILS

(RIGHT LANE)

Prepared by
URS
URS Corporation - North Carolina
1600 Perimeter Park Drive, Suite 400
Morrisville, NC 27560
PHONE: 919) 461-1100 FAX: 919) 461-1415
NC LIC.# C-2243

8/21/2014
NORTH CAROLINA PROFESSIONAL SEAL 039173 ENGINEER MATTHEW K. TOM

DocuSigned by: Matthew K. Tom
D89B9F48B28747E...

REVISIONS						SHEET NO.
NO.	BY:	DATE:	NO.	BY:	DATE:	S-173
1			3			TOTAL SHEETS
2			4			194

DRAWN BY :	M. K. TOM	DATE :	2/20/13
CHECKED BY :	J. C. HALL	DATE :	5/10/13
DESIGNED BY :	M. K. TOM	DATE :	2/20/13

8/20/2014
P:\Jobs1\R2519B\Structures\Electronic Signed Plans\Str 6\406_021_S06_R2519B_SS_02.dgn
kyle_compton

STR. #6