DocuSign Envelope ID: CEA55AD4-4441-4130-B669-B599833E5794

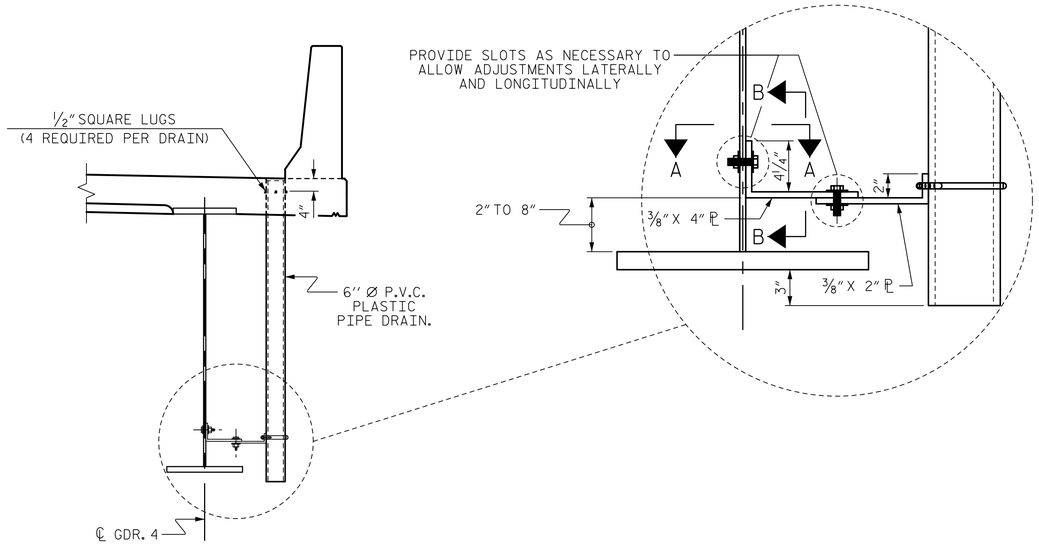

DRAIN CONNECTOR DETAIL

DRAIN NOTES:

COUPLING IN DRAIN PIPE WILL BE PERMITTED AS APPROVED BY THE ENGINEER.

TOP OF FLOOR DRAIN TO BE SET 3/8" BELOW SURFACE OF SLAB.

4 - 1/2" SQUARE LUGS TO BE GLUED TO THE PVC PLASTIC PIPE AT EQUAL SPACES AROUND THE PIPE DRAIN APPROXIMATELY 4" FROM THE TOP OF THE PIPE.

BOLT SIZE TO BE SAME AS DIAPHRAGMS AND CROSSFRAME CONNECTIONS. STAINLESS STEEL WORM DRIVE HOSE CLAMP SHALL BE COMMERCIAL QUALITY.

PVC DECK DRAINS SHALL BE PAINTED WITH TWO COATS OF BROWN PRIMER MEETING THE REQUIREMENTS OF ARTICLE 1080-11 OF THE STANDARD SPECIFICATIONS. EACH COAT SHALL BE 2 DRY MILS THICK. DECK DRAINS SHALL BE ROUGHENED PRIOR TO PAINTING. NO SEPARATE PAYMENT SHALL BE MADE FOR PAINTING PVC DECK DRAINS AS THIS IS CONSIDERED INCIDENTAL TO PAY ITEM FOR REINFORCED CONCRETE DECK SLAB.

THE 6" Ø PVC PLASTIC PIPE AND FITTINGS SHALL BE SCHEDULE 40 AND CONFORM TO ASTM D1785.

PLATES SHALL CONFORM TO AASTHO M270 GRADE 36 STEEL OR APPROVED EQUAL.

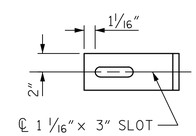

SECTION A-A

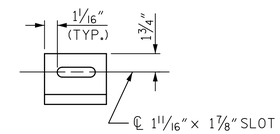

SECTION B-B

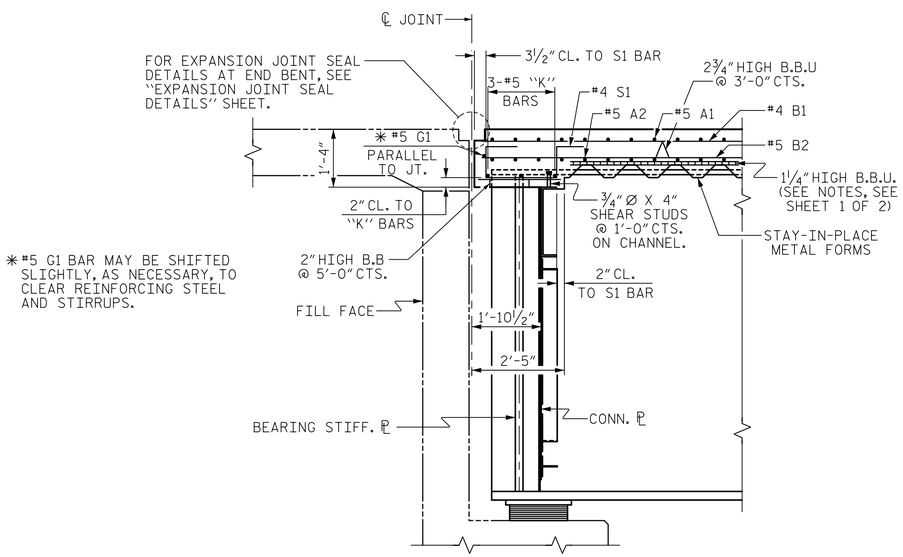

SECTION THRU END BENT DIAPHRAGM

END BENT 1 SHOWN, END BENT 2 SIMILAR

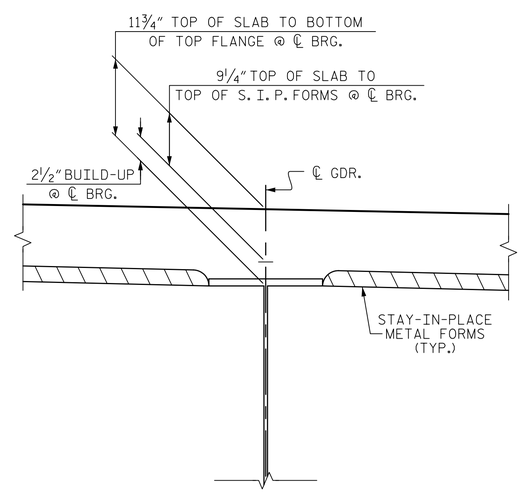

DETAIL "A"

PROJECT NO. R-2519B
YANCEY/MITCHELL COUNTY
STATION: 247+87.50 -L-

SHEET 2 OF 2

STATE OF NORTH CAROLINA
DEPARTMENT OF TRANSPORTATION
RALEIGH

SUPERSTRUCTURE

TYPICAL SECTION DETAILS

(RIGHT LANE)

Prepared by
URS
URS Corporation - North Carolina
1600 Perimeter Park Drive, Suite 400
Morrisville, NC 27560
PHONE: 919 461-1100 FAX: (919) 461-1415
NC LIC. # C-2243

8/21/2014
NORTH CAROLINA PROFESSIONAL SEAL 039173 ENGINEER MATTHEW K. TOM

DocuSigned by: Matthew K. Tom
D89B9F48B2B74E...

REVISIONS						SHEET NO.
NO.	BY:	DATE:	NO.	BY:	DATE:	S-169
1			3			TOTAL SHEETS
2			4			194

STR. #6

DRAWN BY : M. K. TOM DATE : 2/7/13
CHECKED BY : R. L. WHITCHER DATE : 4/22/13
DESIGNED BY : M. K. TOM DATE : 11/27/12

8/20/2014
P:\Jobs1\R2519B\Structures\Electronic Signed Plans\Str 6\406_013_S06_R2519B_TS_02.dgn
kyle_compton