DocuSign Envelope ID: CEA55AD4-4441-4130-B669-B599833E5794

NOTES

FOR PLACEMENT OF #4 J1 BAR, SEE "EXPANSION JOINT SEAL DETAILS" SHEETS.

★#6 A3 BARS ARE POSITIONED ONLY AT THE ACUTE CORNERS OF DECK SLAB. PLACE BARS UNDER TOP "B" BARS.

FOR DETAILS OF 6"Ø PVC PIPE DRAINS, SEE "TYPICAL SECTION DETAILS" SHEET 2 OF 2.

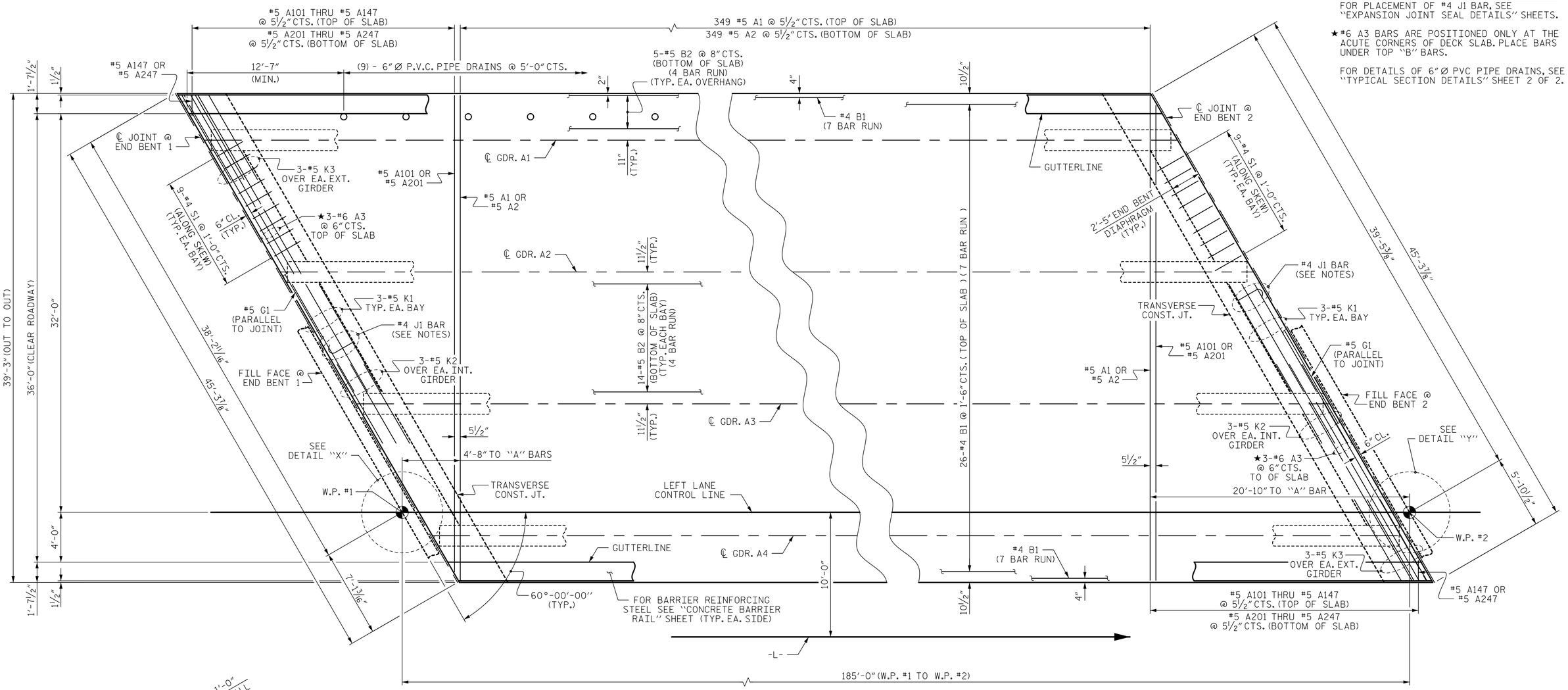

PLAN OF SPAN A

FOR POURING SEQUENCE AND LOCATION AND DETAILS OF TRANSVERSE CONSTRUCTION JOINT, SEE SUPERSTRUCTURE "BILL OF MATERIAL" SHEET.

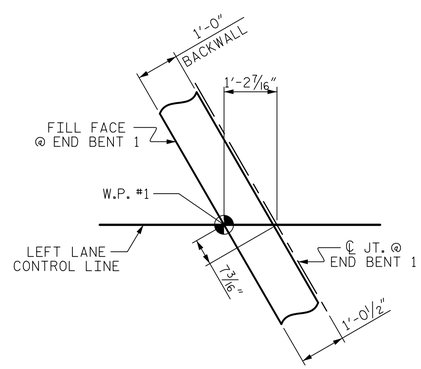

DETAIL "X"

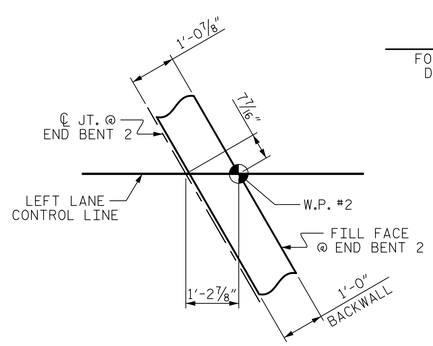

DETAIL "Y"

PROJECT NO. R-2519B
YANCEY/MITCHELL COUNTY
STATION: 247+87.50 -L-

Prepared by
URS
URS Corporation - North Carolina
1600 Perimeter Park Drive, Suite 400
Morrisville, NC 27560
PHONE: (919) 461-1100 FAX: (919) 461-1415
NC LIC.# C-2243

8/21/2014
NORTH CAROLINA PROFESSIONAL SEAL 039173 ENGINEER MATTHEW K. TOM

DocuSigned by: Matthew K. Tom
D8989F48B2874TE...

STATE OF NORTH CAROLINA
DEPARTMENT OF TRANSPORTATION
RALEIGH
SUPERSTRUCTURE

PLAN OF SPAN

(LEFT LANE)

REVISIONS								SHEET NO.
NO.	BY:	DATE:	NO.	BY:	DATE:			S-138
1			3					TOTAL SHEETS
2			4					194

DRAWN BY :	M. K. TOM	DATE :	11/28/12
CHECKED BY :	K. H. COMPTON	DATE :	1/15/13
DESIGNED BY :	M. K. TOM	DATE :	11/28/12

8/20/2014
P:\Jobs1\R2519B\Structures\Electronic Signed Plans\Str 5\405_015_S05_R2519B_POS.dgn
kyle_compton