DocuSign Envelope ID: CEA55AD4-4441-4130-B669-B599833E5794

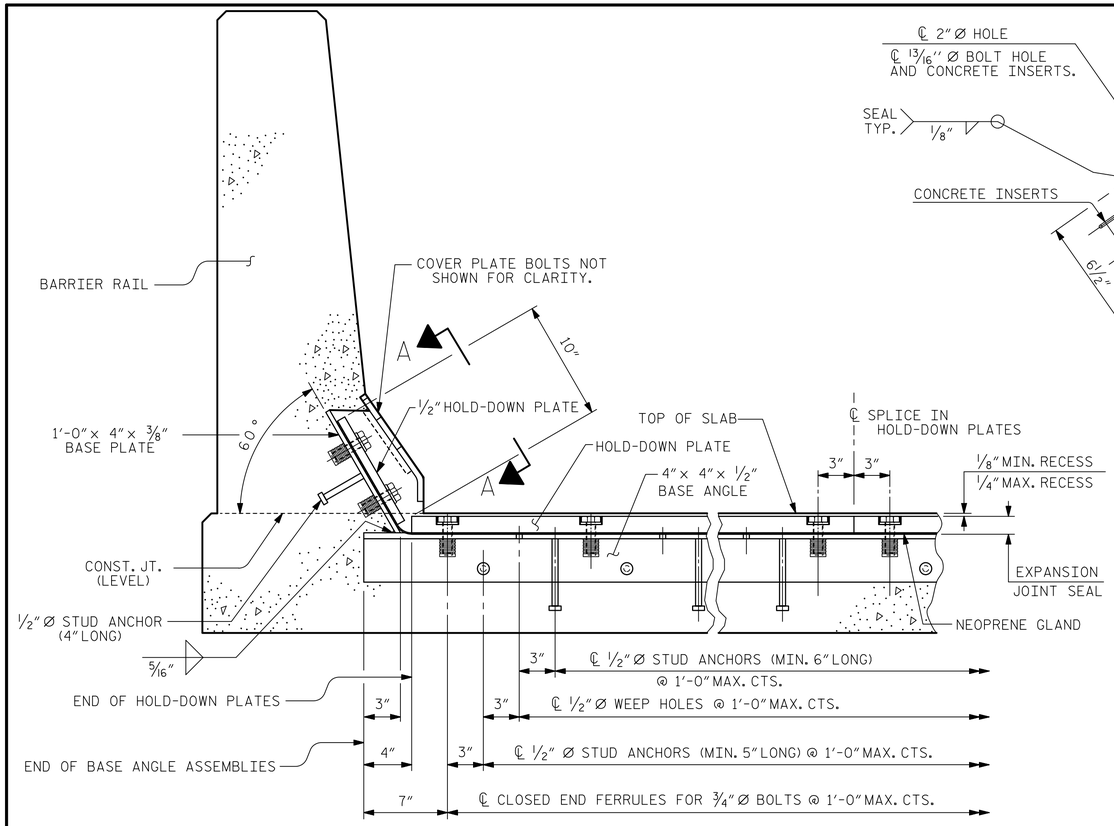

SECTION THRU RAIL NORMAL TO JOINT

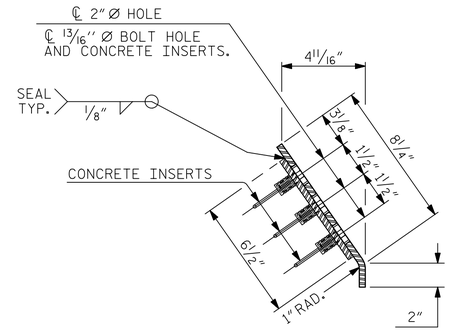

END VIEW

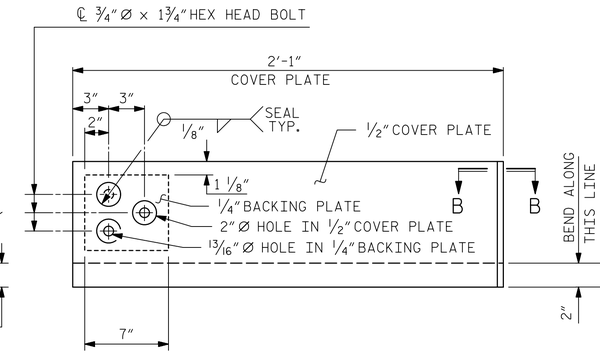

TYPE I - ELEVATION VIEW

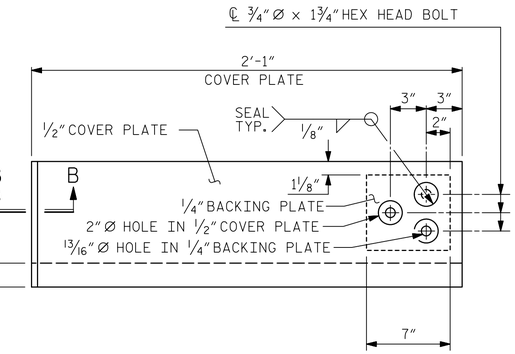

TYPE II - ELEVATION VIEW

COVER PLATE DETAILS

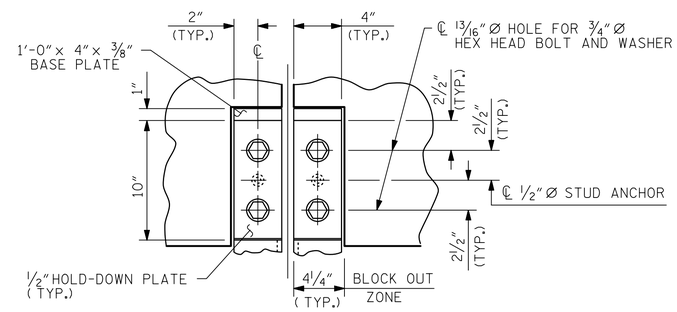

SECTION A - A

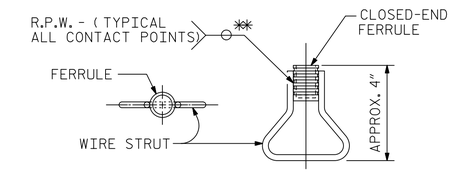

CONCRETE INSERT

** EACH WELDED ATTACHMENT OF WIRE TO FERRULE SHALL DEVELOP THE TENSILE STRENGTH OF THE WIRE.

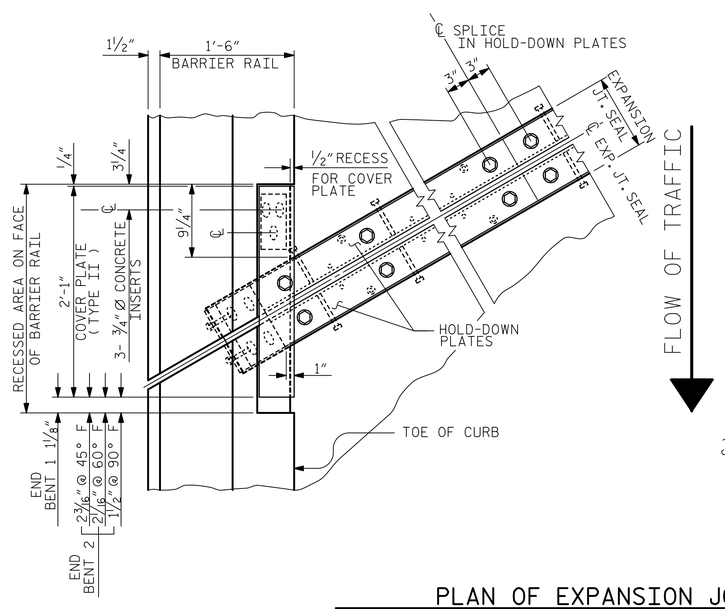

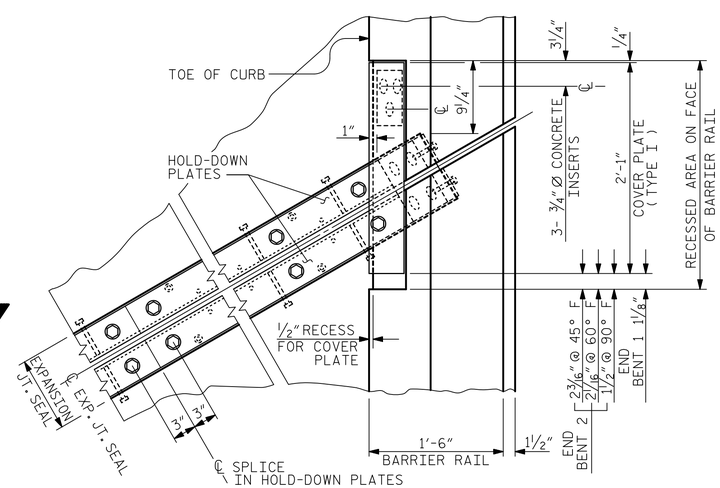

PLAN OF EXPANSION JOINT SEAL

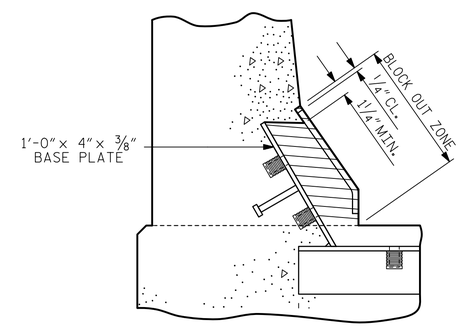

BLOCK OUT DETAIL

SEE "SECTION A - A" FOR OTHER DETAILS.

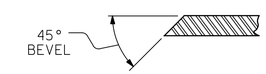

SECTION B - B

PROJECT NO. R-2519B

YANCEY/MITCHELL COUNTY

STATION: 247+87.50 -L-

SHEET 2 OF 2

STATE OF NORTH CAROLINA
DEPARTMENT OF TRANSPORTATION
RALEIGH

STANDARD
EXPANSION JOINT SEAL DETAILS FOR BARRIER RAIL
(LEFT LANE)

ASSEMBLED BY : M. K. TOM	DATE : 12/6/12		
CHECKED BY : K. H. COMPTON	DATE : 2/6/13		
DESIGNED BY : M. K. TOM	DATE : 12/6/12		
DRAWN BY : REK 9/87	REV. 10/1/11	MAA/GM	
CHECKED BY : CRK 10/87	REV. 7/12	MAA/GM	
	REV. 10/12	MAA/GM	

Prepared by
URS
URS Corporation - North Carolina
1600 Perimeter Park Drive, Suite 400
Morrisville, NC 27560
PHONE: (919) 461-1100 FAX: (919) 461-1415
NC LIC.# C-2243

8/21/2014
NORTH CAROLINA PROFESSIONAL SEAL 039173 ENGINEER MATTHEW K. TOM

DocuSigned by: Matthew K. Tom
D89B9F48B2B747E...

REVISIONS

NO.	BY:	DATE:	NO.	BY:	DATE:
1			3		
2			4		

SHEET NO. S-150
TOTAL SHEETS 194

STD. NO. EJS2

STR. #5

8/20/2014
P:\Jobs1\R2519B\Structures\Electronic Signed Plans\Str 5\405_039_S05_R2519B_JS_02.dgn
kyle_compton