DocuSign Envelope ID: CEA55AD4-4441-4130-B669-B599833E5794

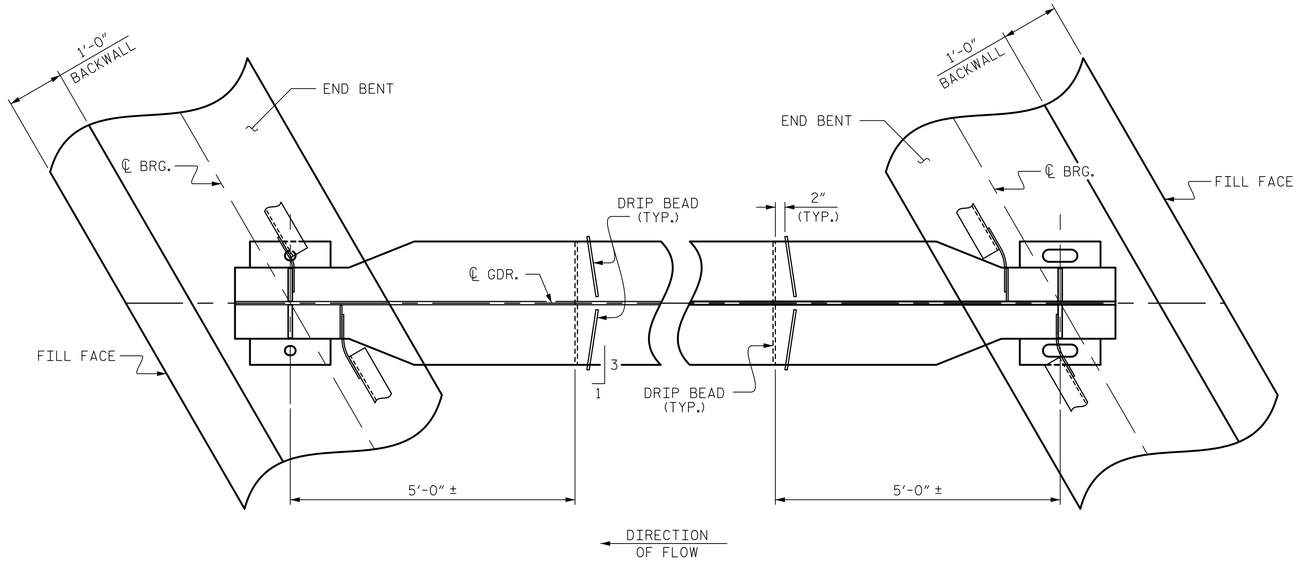

PART PLAN - BOTTOM FLANGE

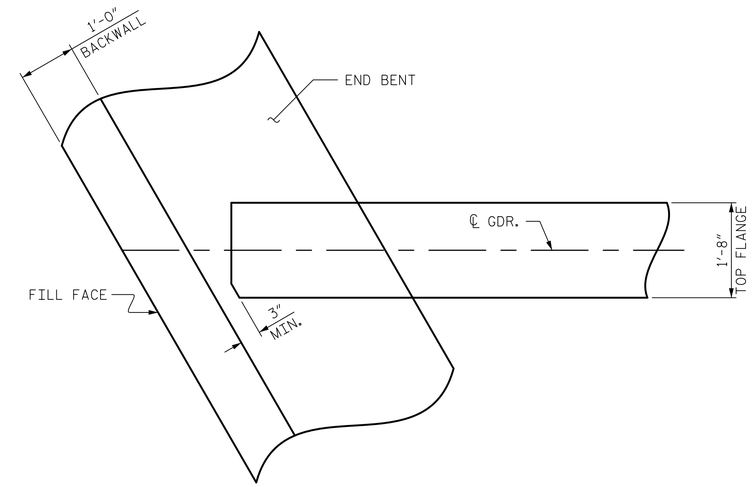

TOP FLANGE CLIP DETAIL

(TYP. AT BOTH ENDS OF GIRDER)

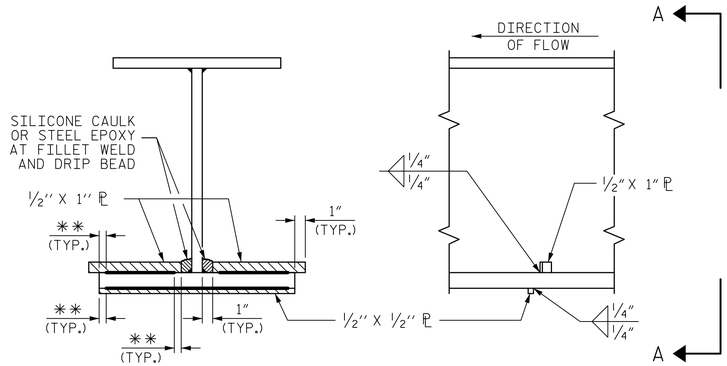

VIEW A-A

** SEE "WELD TERMINATION DETAILS" SHEET 3 OF 4

SECTION

DRIP BEAD DETAILS

PROJECT NO. R-2519B

YANCEY/MITCHELL COUNTY

STATION: 247+87.50 -L-

SHEET 4 OF 4

STATE OF NORTH CAROLINA
DEPARTMENT OF TRANSPORTATION
RALEIGH

SUPERSTRUCTURE

STRUCTURAL STEEL DETAIL

(LEFT LANE)

Prepared by
URS
URS Corporation - North Carolina
1600 Perimeter Park Drive, Suite 400
Morrisville, NC 27560
PHONE: 919 461-1100 FAX: 919 461-1415
NC LIC. # C-2243

8/21/2014
NORTH CAROLINA PROFESSIONAL SEAL 039173 ENGINEER MATTHEW K. TOM

DocuSigned by: Matthew K. Tom
D86B9F48B2B747E...

REVISIONS						SHEET NO.
NO.	BY:	DATE:	NO.	BY:	DATE:	S-143
1			3			TOTAL SHEETS
2			4			194

DRAWN BY : M. K. TOM DATE : 5/8/13
CHECKED BY : J. C. HALL DATE : 5/14/13
DESIGNED BY : M. K. TOM DATE : 5/8/13

8/20/2014
P:\Jobs1\R2519B\Structures\Electronic Signed Plans\Str 5\405_025_S05_R2519B_SS_04.dgn
kyle_compton

STR. #5