DocuSign Envelope ID: CEA55AD4-4441-4130-B669-B599833E5794

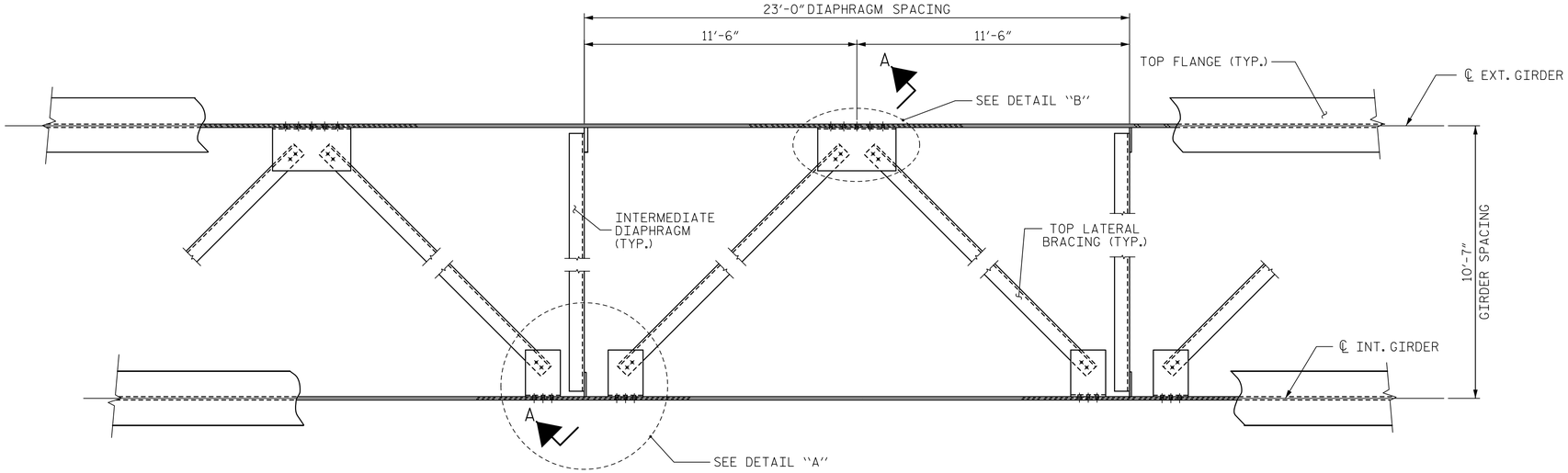

PART PLAN - NEAR TOP FLANGE LATERAL BRACING

(THROUGHOUT EXTERIOR BAYS ONLY)

NOTES

LATERAL BRACING ASSEMBLY SHALL COMPLY WITH SECTION 1072 OF THE STANDARD SPECIFICATIONS.

ALL STRUCTURAL STEEL SHALL BE AASHTO M270 GRADE 50W OR APPROVED EQUAL.

TENSION ON THE ASTM A325 BOLTS SHALL BE CALIBRATED USING DIRECT TENSION INDICATOR WASHERS IN ACCORDANCE WITH THE STANDARD SPECIFICATIONS.

ALL BOLTED CONNECTIONS SHALL BE 7/8" Ø HIGH STRENGTH BOLTS.

THE CONTRACTOR HAS THE OPTION TO CLIP THE PROTRUDING CORNERS OF THE GUSSET PLATES, AT NO ADDITIONAL COST TO THE DEPARTMENT.

BENT GUSSET PLATES OR ROLLED ANGLE SHAPES MAY BE SUBSTITUTED FOR THE WELDED GUSSET PLATES DETAILED IF APPROVED BY THE ENGINEER, AT NO ADDITIONAL COST TO THE DEPARTMENT.

INSTALL THE LATERAL BRACING AFTER ERECTING THE EXTERIOR GIRDER AND THE ADJACENT INTERIOR GIRDER AND INSTALLING THE INTERMEDIATE DIAPHRAGMS.

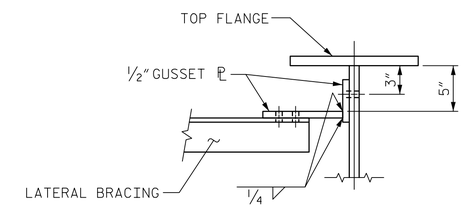

SECTION THRU CONNECTION

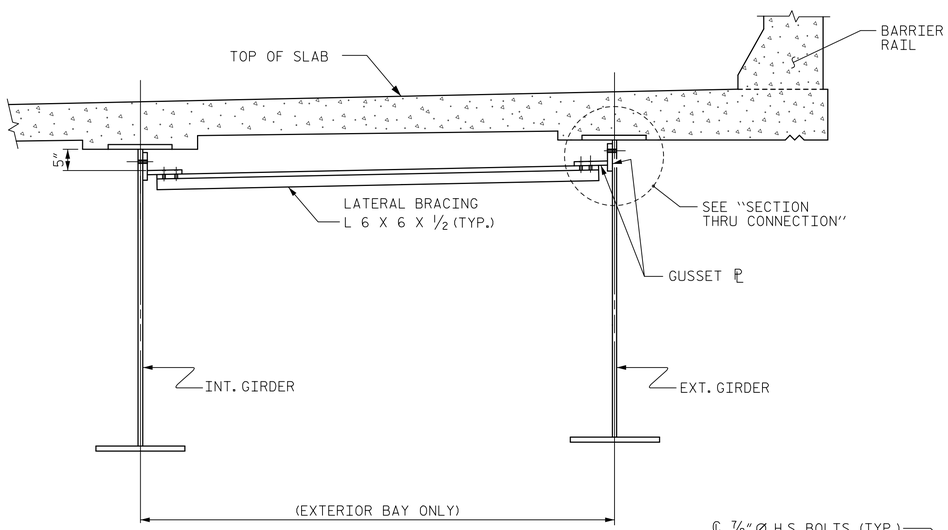

SECTION A-A

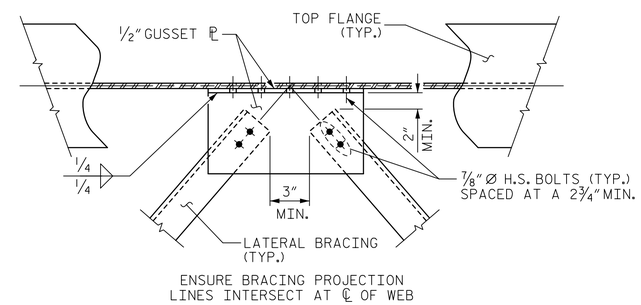

DETAIL "B"

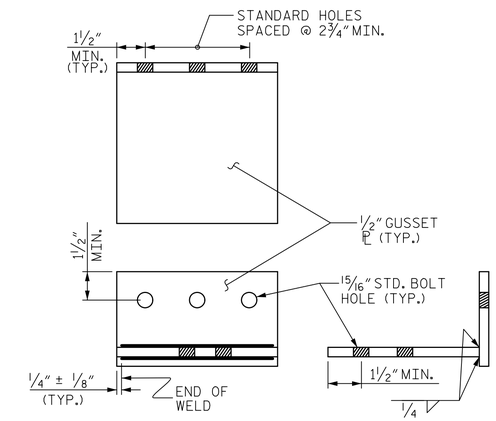

CONNECTION DETAIL

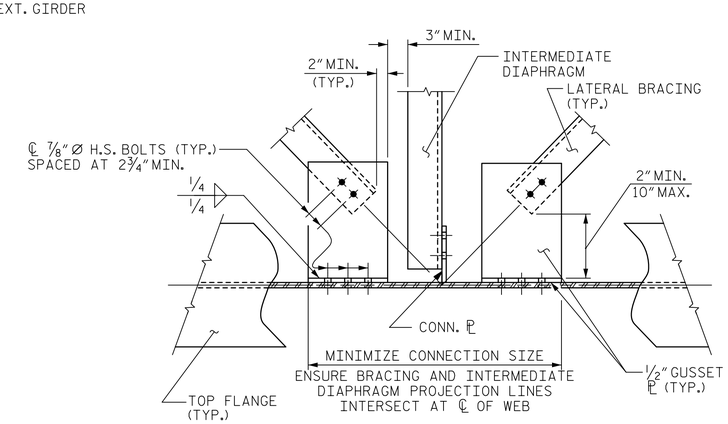

DETAIL "A"

PROJECT NO. R-2519B
YANCEY/MITCHELL COUNTY
STATION: 247+87.50 -L-

ASSEMBLED BY :	M. K. TOM	DATE :	12/10/12
CHECKED BY :	K. H. COMPTON	DATE :	4/11/13
DESIGNED BY :	M. K. TOM	DATE :	12/10/12
DRAWN BY :	WMC 6/11	ADDED: 10/31/11	
CHECKED BY :	GM 6/11		

Prepared by
URS
URS Corporation - North Carolina
1600 Perimeter Park Drive, Suite 400
Morrisville, NC 27560
PHONE: (919) 461-1100 FAX: (919) 461-1415
NC LIC.# C-2243

8/21/2014
NORTH CAROLINA PROFESSIONAL SEAL 039173 ENGINEER MATTHEW K. TOM
DocuSigned by: Matthew K. Tom
D69B9F48B2B747E...

STATE OF NORTH CAROLINA
DEPARTMENT OF TRANSPORTATION
RALEIGH

STANDARD

LATERAL BRACING

(LEFT LANE)

REVISIONS								SHEET NO.
NO.	BY:	DATE:		NO.	BY:	DATE:		S-144
1				3				TOTAL SHEETS
2				4				194

STD. NO. LB1

STR. #5

8/20/2014
P:\Jobs1\R2519B\Structures\Electronic Signed Plans\Str 5\405_027_S05_R2519B_LB.dgn
kyle_compton