DocuSign Envelope ID: CEA55AD4-4441-4130-B669-B599833E5794

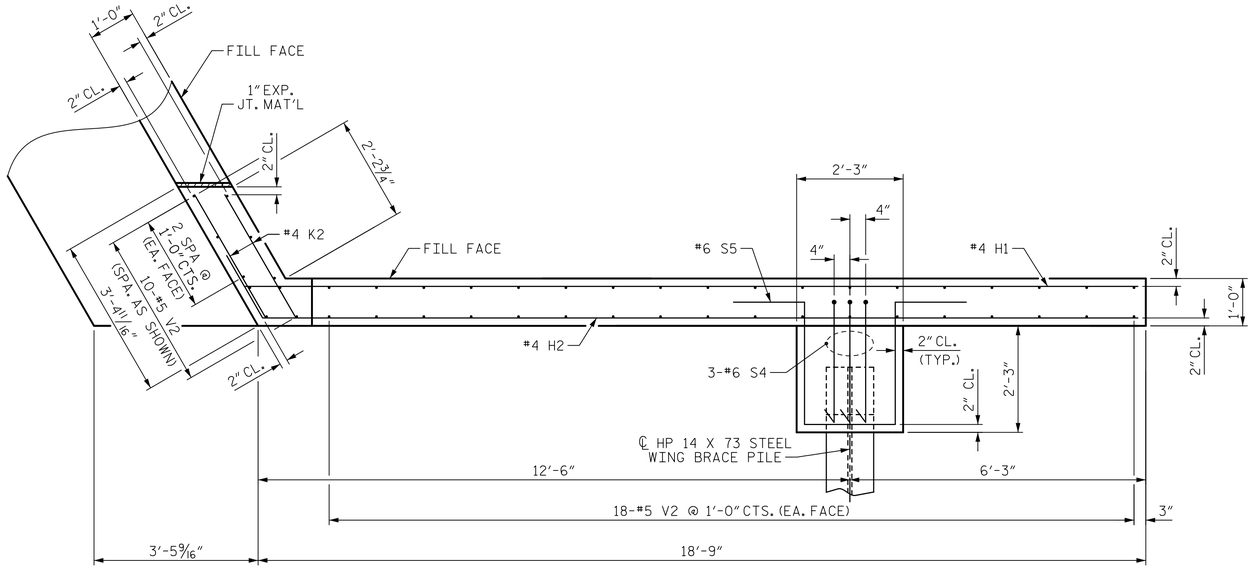

PLAN OF WING (W1)

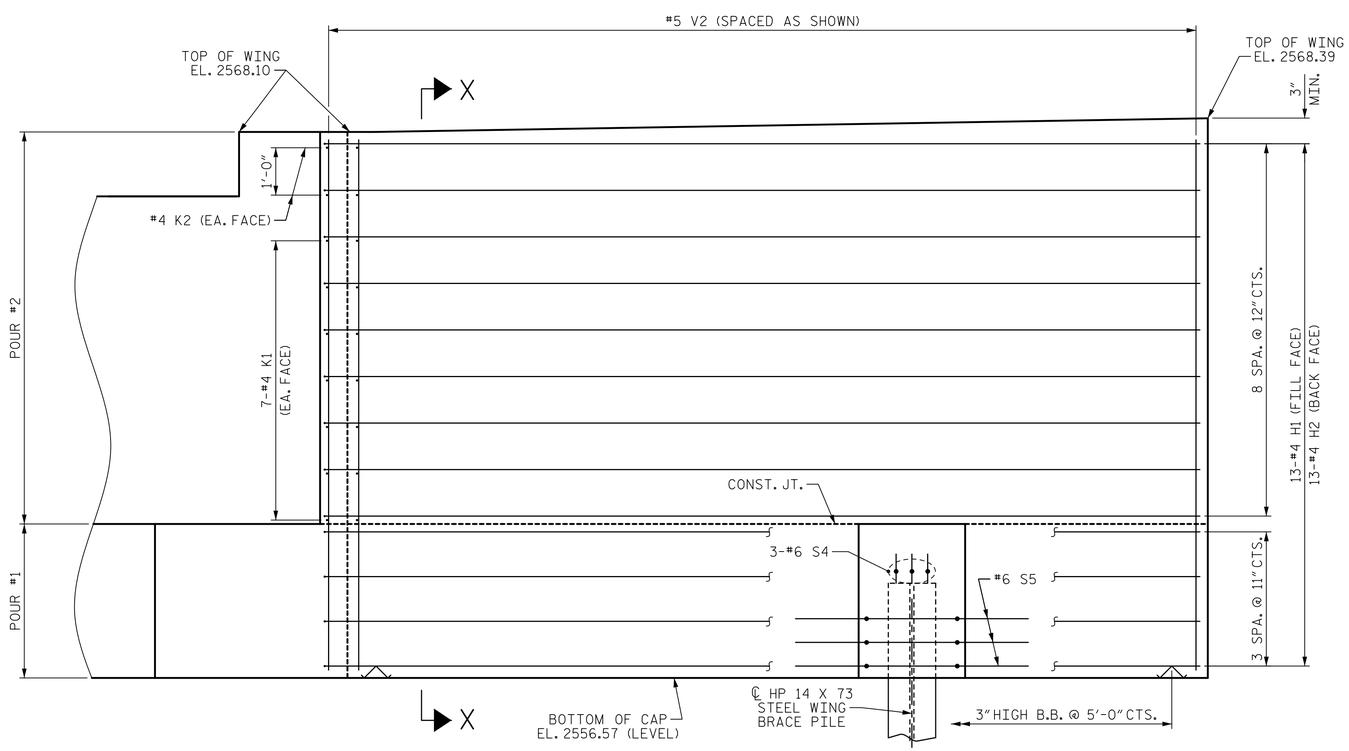

ELEVATION OF WING (W1)

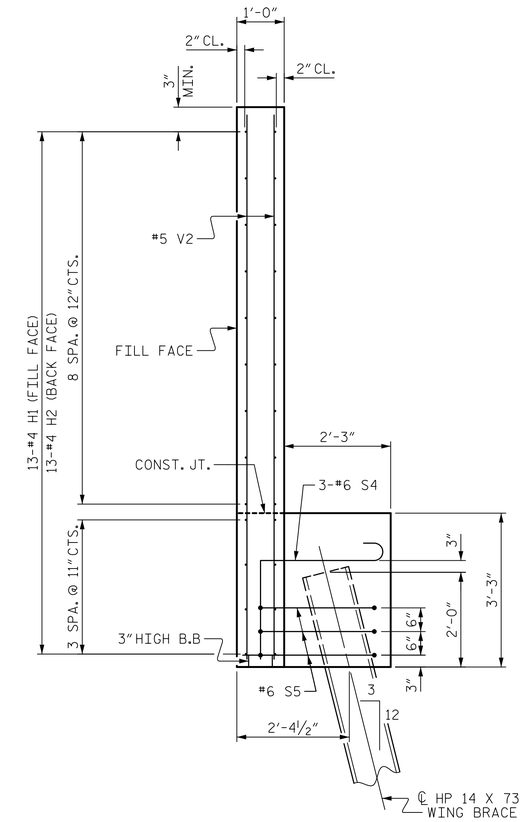

SECTION X-X

PROJECT NO. R-2519B

YANCEY/MITCHELL COUNTY

STATION: 247+87.50 -L-

SHEET 2 OF 3

STATE OF NORTH CAROLINA
DEPARTMENT OF TRANSPORTATION
RALEIGH

SUBSTRUCTURE

END BENT 1

(LEFT LANE)

Prepared by
URS
URS Corporation - North Carolina
1600 Perimeter Park Drive, Suite 400
Morrisville, NC 27560
PHONE: 919) 461-1100 FAX: 919) 461-1415
NC LIC.# C-2243

8/21/2014
NORTH CAROLINA PROFESSIONAL SEAL 039173 ENGINEER MATTHEW K. TOM

DocuSigned by: Matthew K. Tom
D89B9F4882B747E...

REVISIONS							SHEET NO.
NO.	BY:	DATE:	NO.	BY:	DATE:		S-153
1			3				TOTAL SHEETS
2			4				194

DRAWN BY :	M. K. TOM	DATE :	12/12/12
CHECKED BY :	K. H. COMPTON	DATE :	2/11/13
DESIGNED BY :	M. K. TOM	DATE :	12/12/12

8/20/2014
P:\Jobs1\R2519B\Structures\Electronic Signed Plans\Str 5\405_045_S05_R2519B_EB1_02.dgn
kyle_compton

STR. #5