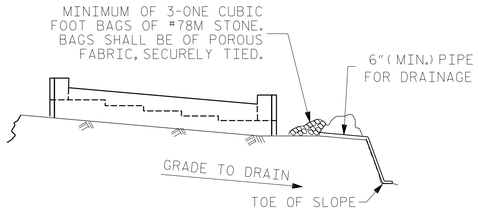

BAGGED STONE AND PIPE SHALL BE PLACED IMMEDIATELY AFTER COMPLETION OF END BENT EXCAVATION. PIPE MAY BE EITHER CONCRETE, CORRUGATED STEEL, CORRUGATED ALUMINUM ALLOY, OR CORRUGATED PLASTIC. PERFORATED PIPE WILL NOT BE ALLOWED.

BAGGED STONE SHALL REMAIN IN PLACE UNTIL THE ENGINEER DIRECTS THAT IT BE REMOVED. THE CONTRACTOR SHALL REMOVE AND DISPOSE OF SILT ACCUMULATIONS AT BAGGED STONE WHEN SO DIRECTED BY THE ENGINEER. BAGS SHALL BE REMOVED AND REPLACED WHENEVER THE ENGINEER DETERMINES THAT THEY HAVE DETERIORATED AND LOST THEIR EFFECTIVENESS.

NO SEPARATE PAYMENT WILL BE MADE FOR THIS WORK AND THE ENTIRE COST OF THIS WORK SHALL BE INCLUDED IN THE UNIT CONTRACT PRICE BID FOR THE SEVERAL PAY ITEMS.

TEMPORARY DRAINAGE AT END BENT

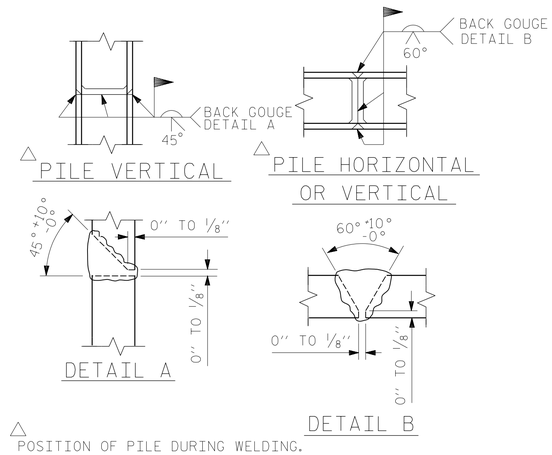

PILE SPLICE DETAILS

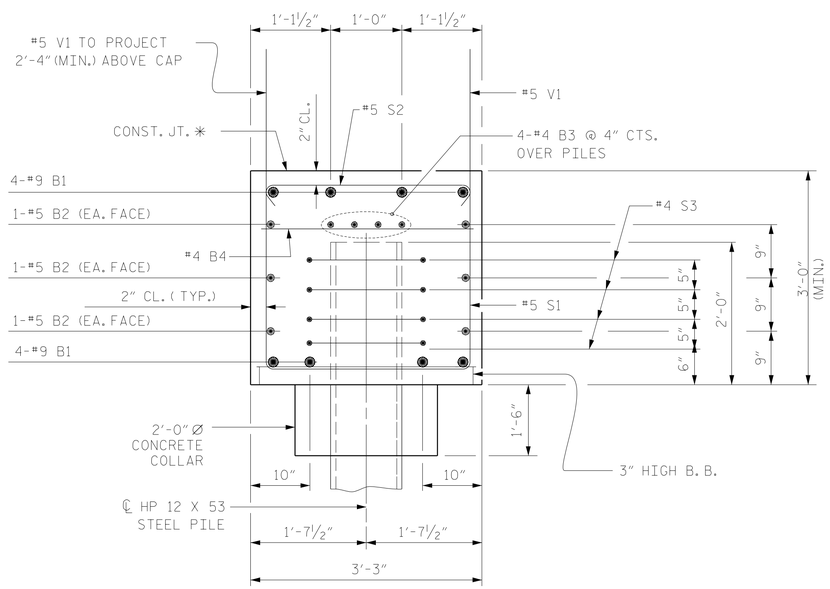

SECTION A-A

✳ THE TOP SURFACE OF THE END BENT CAP & WINGS, EXCLUDING THE BEARING AREA, SHALL BE RAKED TO A DEPTH OF ¼".

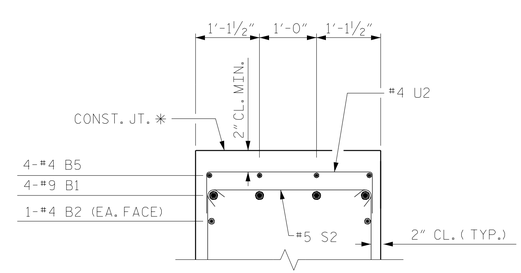

PARTIAL SECTION B-B

BAR TYPES

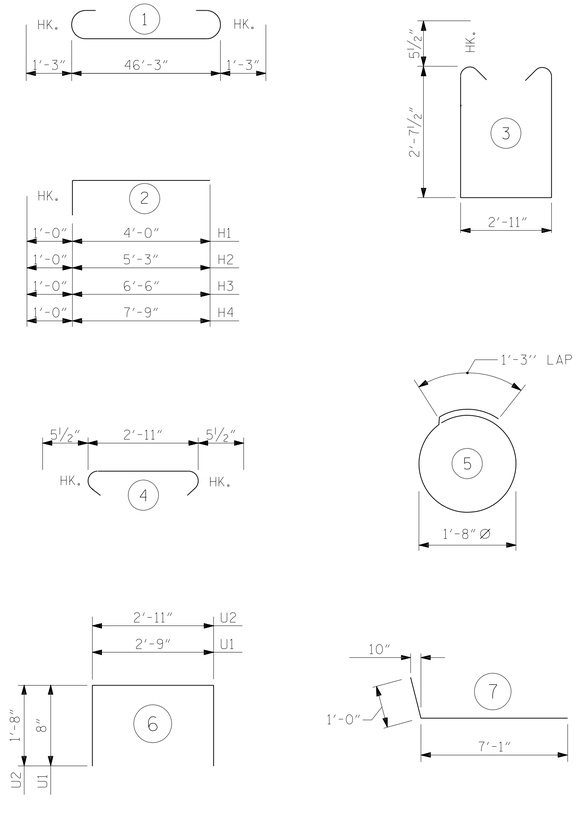

ALL BAR DIMENSIONS ARE OUT TO OUT.

BILL OF MATERIAL

END BENT NO. 1

BAR	NO.	SIZE	TYPE	LENGTH	WEIGHT
B1	8	#9	1	48'-9"	1326
B2	6	#5	STR	46'-3"	289
B3	8	#4	STR	24'-4"	130
B4	12	#4	STR	2'-11"	23
B5	4	#4	STR	23'-7"	63
H1	2	#6	2	5'-0"	15
H2	2	#6	2	6'-3"	19
H3	2	#6	2	7'-6"	23
H4	2	#6	2	8'-9"	26
S1	53	#5	3	9'-1"	502
S2	53	#5	4	3'-10"	212
S3	28	#4	5	6'-6"	122
U1	10	#4	6	4'-1"	27
U2	15	#4	6	6'-3"	63
V1	96	#5	STR	5'-10"	584
V2	2	#5	STR	5'-4"	11
V3	2	#5	STR	4'-8"	10
V4	2	#5	STR	4'-3"	9
V5	2	#5	7	8'-1"	17

REINFORCING STEEL LBS. 3471

CLASS A CONCRETE
POUR 1
CAP, CONCRETE COLLARS & LOWER PART OF WING C. Y. 19.2
TOTAL C. Y. 19.2

HP 12 X 53 STEEL PILES
NO. 7 315 LIN. FT.

✳✳ CONCRETE QUANTITY FOR UPPER PART OF WING IS INCLUDED IN POUR #4 OF THE SUPERSTRUCTURE

PROJECT NO. R-2519B
YANCEY/MITCHELL COUNTY
STATION: 122+22.50 -L-

SHEET 3 OF 3

NORTH CAROLINA PROFESSIONAL SEAL 18442 ENGINEER RICHARD LEON BOLLINGER, JR.

Digitally signed by Richard L Bollinger
Date: 2014.08.26 16:12:37 -04'00'

RS&H IMPROVING YOUR WORLD

RS&H Architects-Engineers-Planners, Inc.
8601 Six Forks Road, Suite 260
Raleigh, NC 27615
919-846-6701 FAX 919-846-9080
www.rsandh.com
North Carolina License Nos. 50073 * F-0493 * C-28

STATE OF NORTH CAROLINA
DEPARTMENT OF TRANSPORTATION
RALEIGH

SUBSTRUCTURE

INTEGRAL END BENT NO. 1

RIGHT LANE

REVISIONS						SHEET NO.
NO.	BY:	DATE:	NO.	BY:	DATE:	S-120
1			3			TOTAL SHEETS
2			4			194

DWG. No. 066

DRAWN BY :	MKO	DATE :	06/2013
CHECKED BY :	JMR	DATE :	07/2013
DESIGN ENGINEER OF RECORD :	JMR	DATE :	07/2013