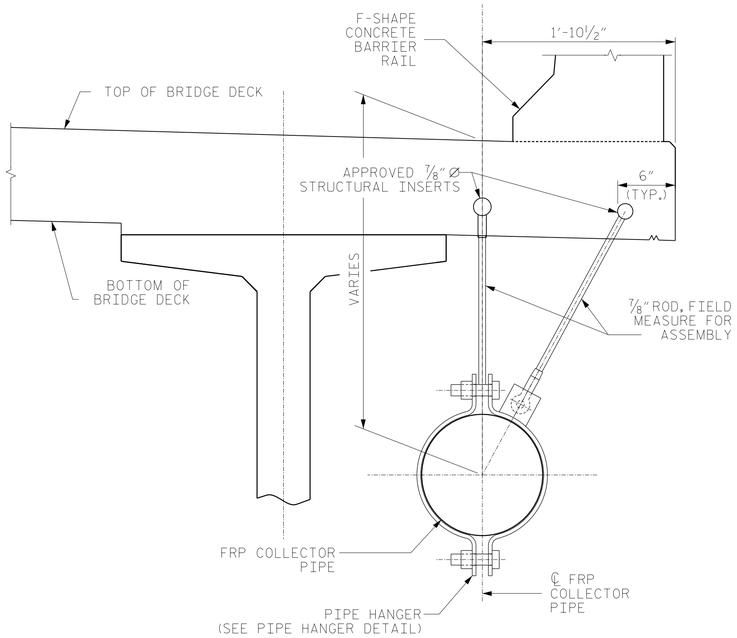

PIPE HANGER & PIPE STANDOFF

ALL COMPONENTS SHALL BE GALVANIZED AFTER FABRICATION.

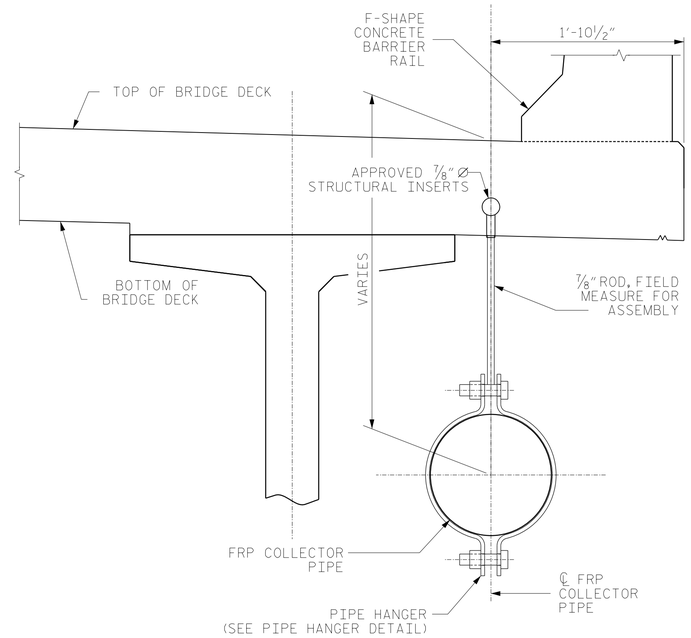

PIPE HANGER

ALL COMPONENTS SHALL BE GALVANIZED AFTER FABRICATION.

NOTES:

1. FOR ADDITIONAL NOTES, SEE SHEET 3 OF 3.
2. CONTRACTOR SHALL ENSURE PIPE WALL BUILDUP IS SUFFICIENT TO ENGAGE PIPE RESTRAINT CLAMP AT LONGITUDINAL RESTRAINT LOCATIONS.

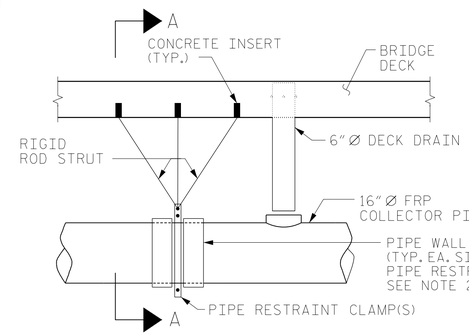

ELEVATION VIEW

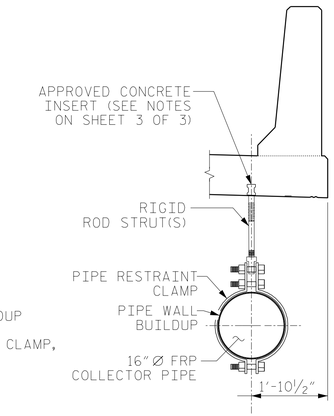

SECTION A-A

LONGITUDINAL RESTRAINT DETAIL

* STANDOFF NOT REQUIRED AT LONGITUDINAL RESTRAINT

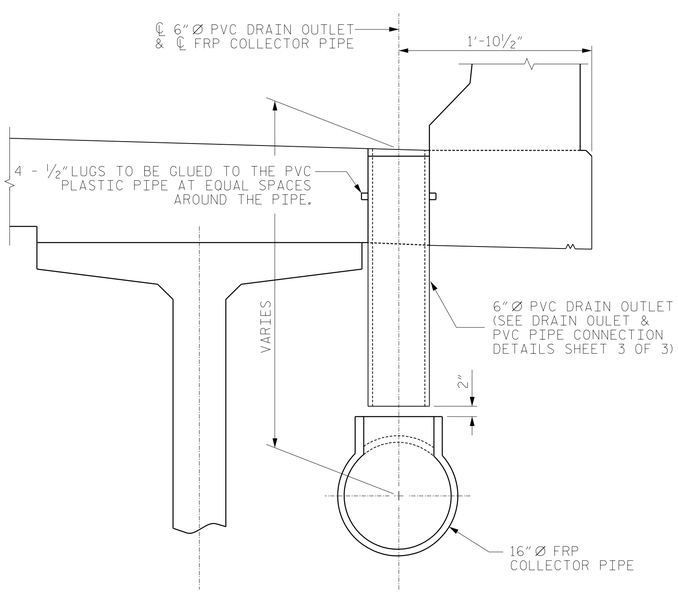

OVERHANG DRAINAGE DETAIL

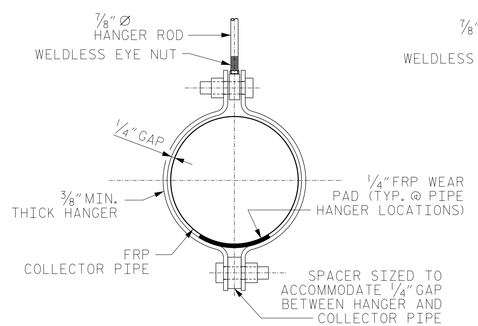

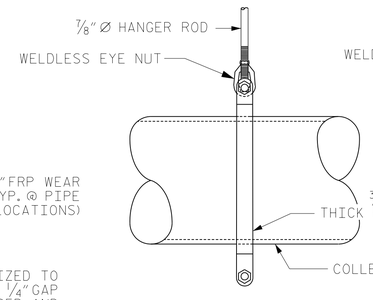

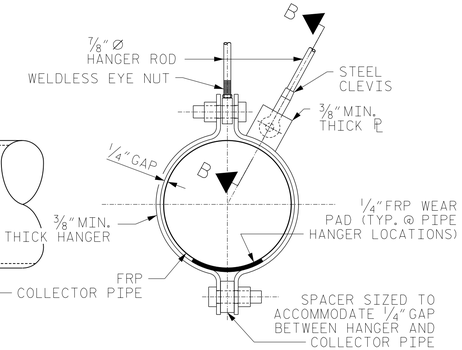

PIPE HANGER DETAILS

ALL COMPONENTS SHALL BE GALVANIZED AFTER FABRICATION

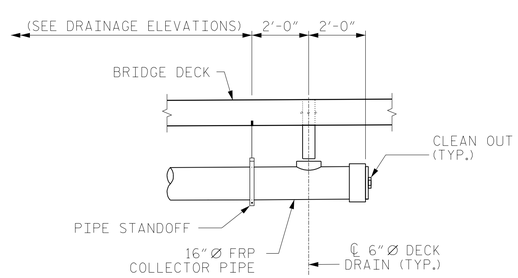

TYPE I

SYSTEM ENDS DETAIL

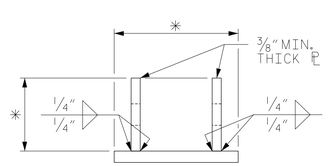

SECTION B-B

(STEEL CLEVIS & ⅞"Ø HANGER ROD NOT SHOWN FOR CLARITY)

* DIMENSIONS TO BE DETERMINED BY MANUFACTURER.

PROJECT NO. R-2519B

YANCEY/MITCHELL COUNTY

STATION: 122+22.50 -L-

SHEET 2 OF 3

NORTH CAROLINA PROFESSIONAL SEAL 18442 ENGINEER RICHARD LEON BOLLINGER JR.

Digitally signed by Richard L Bollinger
Date: 2014.08.26 16:00:49 -04'00'

RS&H IMPROVING YOUR WORLD

RS&H Architects-Engineers-Planners, Inc.
8601 Six Forks Road, Suite 260
Raleigh, NC 27615
919-846-6701 FAX 919-846-9080
www.rsandh.com
North Carolina License Nos. 50073 * F-0493 * C-28

STATE OF NORTH CAROLINA
DEPARTMENT OF TRANSPORTATION
RALEIGH

SUPERSTRUCTURE

STRUCTURE DRAINAGE SYSTEM DETAILS

RIGHT LANE

REVISIONS						
NO.	BY:	DATE:	NO.	BY:	DATE:	
1			3			
2			4			

SHEET NO. S-104

TOTAL SHEETS 194

DWG. No. 050

DRAWN BY :	JML	DATE :	7/2013
CHECKED BY :	JMR	DATE :	7/2013
DESIGN ENGINEER OF RECORD :	JMR	DATE :	7/2013