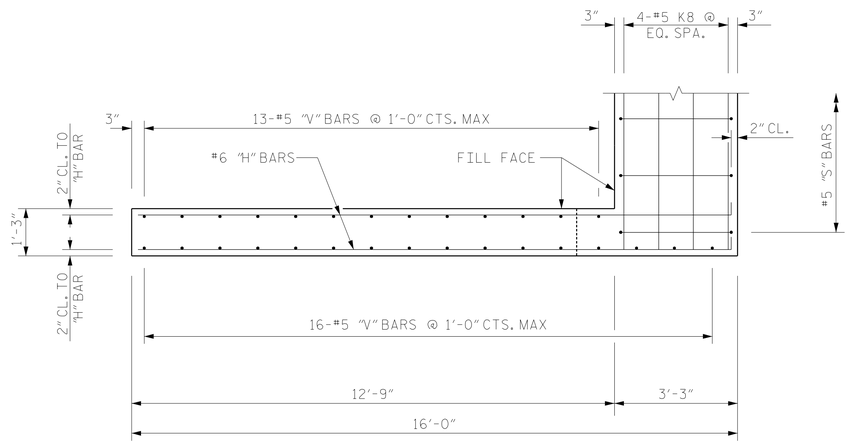

PLAN OF WING - W1

WING AT END BENT 1 SHOWN, WING @ END BENT 2 SIMILAR

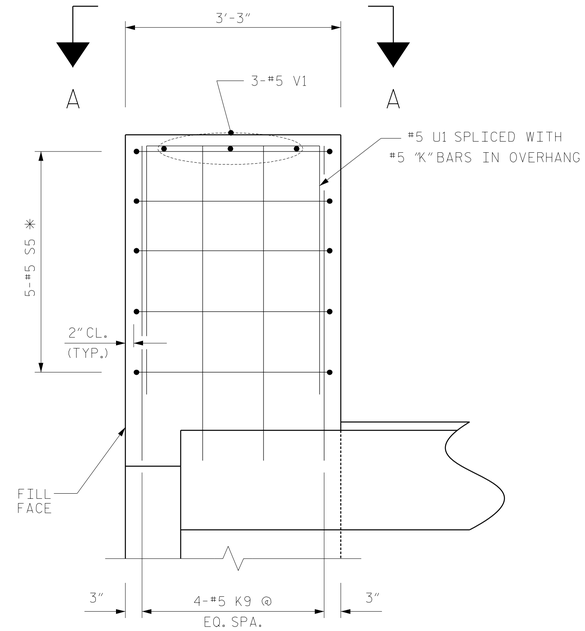

PLAN - LT. END OF CAP

END BENT 1 SHOWN, END BENT 2 SIMILAR

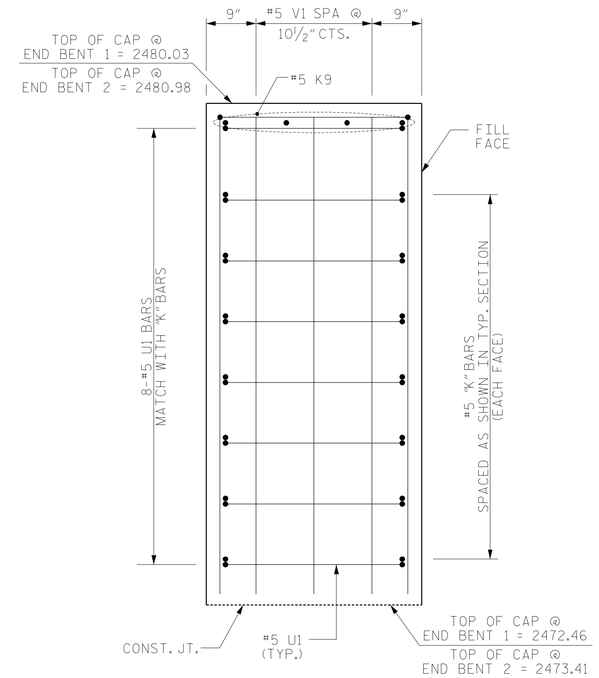

VIEW A-A - LT. END OF CAP

END BENT 1 SHOWN, END BENT 2 SIMILAR

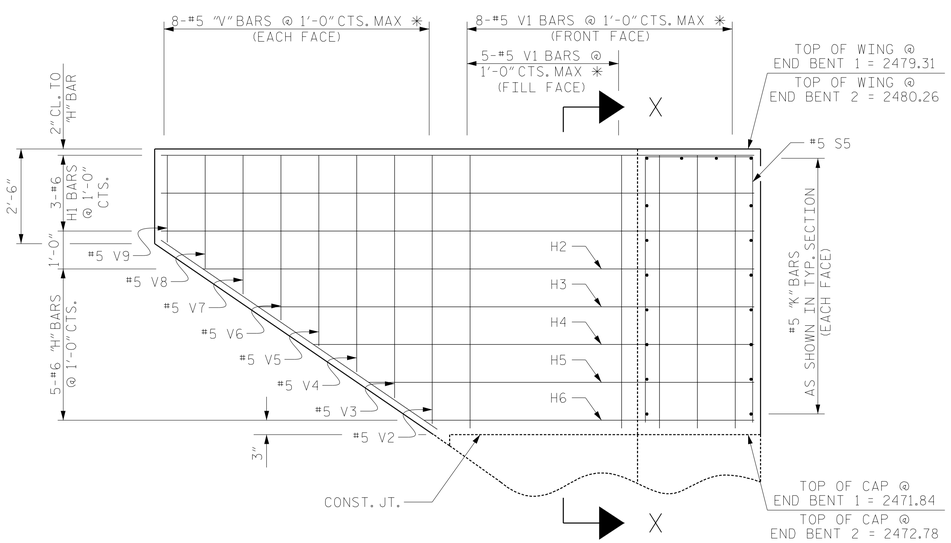

ELEVATION OF WING - W1

* "V" BARS IN UPPER WING MATCH WITH "V" BARS FROM INTEGRAL BENT CAP

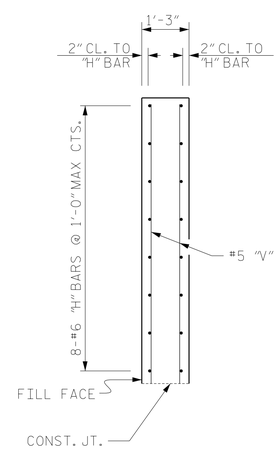

SECTION X-X

PROJECT NO. R-2519B

YANCEY/MITCHELL COUNTY

STATION: 122+22.50 -L-

SHEET 3 OF 3

DRAWN BY :	MKO	DATE :	05/2013
CHECKED BY :	JMR	DATE :	07/2013
DESIGN ENGINEER OF RECORD :	JMR	DATE :	07/2013

NORTH CAROLINA PROFESSIONAL SEAL 18442 ENGINEER RICHARD LEON BOLLINGER

Digitally signed by Richard L Bollinger
Date: 2014.08.26 15:59:37 -04'00'

RS&H IMPROVING YOUR WORLD

RS&H Architects-Engineers-Planners, Inc.
8601 Six Forks Road, Suite 260
Raleigh, NC 27615
919-846-6701 FAX 919-846-9080
www.rsandh.com
North Carolina License Nos. 50073 * F-0493 * C-28

STATE OF NORTH CAROLINA
DEPARTMENT OF TRANSPORTATION
RALEIGH

SUBSTRUCTURE

PLAN OF SPAN DETAILS

RIGHT LANE

REVISIONS								SHEET NO.
NO.	BY:	DATE:	NO.	BY:	DATE:			S-102
1			3					TOTAL SHEETS
2			4					194

DWG. No. 048