NOTES

THE BARRIER RAIL IN A CONTINOUS UNIT SHALL NOT BE CAST UNTIL ALL SLAB CONCRETE IN THAT UNIT HAS BEEN CAST AND HAS REACHED A MINIMUM COMPRESSIVE STRENGTH OF 3,000 PSI.

WHEN FOAM JOINT SEAL IS REQUIRED, THE JOINT IN THE DECK SHALL BE SAWED PRIOR TO THE CASTING OF BARRIER RAIL.

ALL REINFORCING STEEL IN BARRIER RAILS SHALL BE EPOXY COATED.

THE #5 S3, S4, S5 AND S6 BARS MAY BE INSTALLED, USING AN ADHESIVE ANCHORING SYSTEM, AFTER SAWING THE JOINT. THE YIELD LOAD FOR THE #5 S3, S4, S5 AND S6 BARS IS 18.6 KIPS. FIELD TESTING FOR THE ADHESIVE BONDING SYSTEM IS NOT REQUIRED. THESE BARS MAY BE CAST IN PLACE WITH CONCRETE DECK IF DESIRED.

GROOVED CONTRACTION JOINTS, 1/2" IN DEPTH, SHALL BE TOOLED IN ALL EXPOSED FACES OF THE BARRIER RAIL AND IN ACCORDANCE WITH ARTICLE 825-10(B) OF THE STANDARD SPECIFICATIONS. THE CONTRACTION JOINT SHALL BE LOCATED AT EACH THIRD POINT BETWEEN BARRIER RAIL EXPANSION JOINTS. ONLY ONE CONTRACTION JOINT IS REQUIRED AT MIDPOINT OF BARRIER RAIL SEGMENTS LESS THAN 20 FEET IN LENGTH AND NO CONTRACTION JOINTS ARE REQUIRED FOR THOSE SEGMENTS LESS THAN 10 FEET IN LENGTH.

BAR TYPES

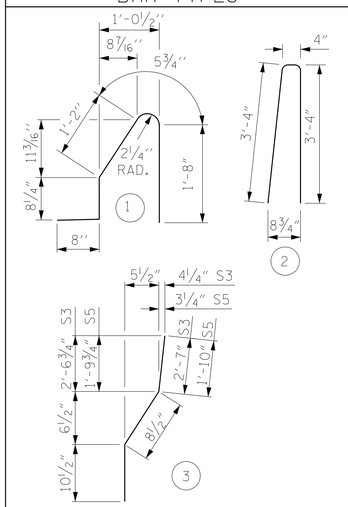

ALL BAR DIMENSIONS ARE OUT TO OUT

BILL OF MATERIAL

FOR CONCRETE BARRIER RAIL ONLY

BAR	NO.	SIZE	TYPE	LENGTH	WEIGHT
* B1	220	#5	STR	27'-7"	6329
* B2	22	#5	STR	14'-9"	338
* B3	22	#5	STR	17'-9"	407
* S1	614	#5	1	4'-8"	2989
* S2	614	#5	2	7'-0"	4483
* S3	8	#5	3	4'-2"	35
* S4	8	#5	STR	4'-0"	33
* S5	8	#5	3	3'-5"	29
* S6	8	#5	STR	3'-3"	27

* EPOXY COATED REINFORCING STEEL 14670 LBS.

CLASS AA CONCRETE 85.2 CU. YDS.

CONCRETE BARRIER RAIL 626.67 LIN. FT.

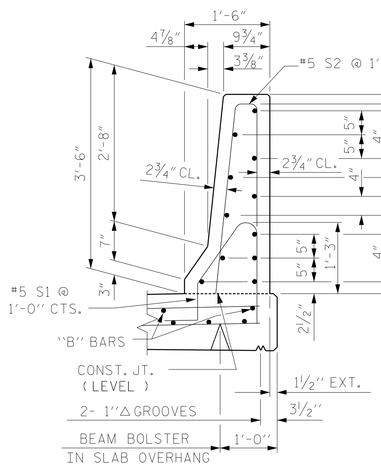

SECTION THRU RAIL

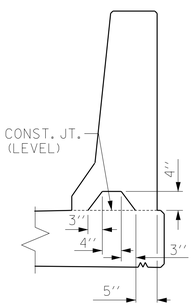

SECTION S-S

AT DAM IN OPEN JOINT (THIS IS TO BE USED ONLY WHEN SLIP FORM IS USED)

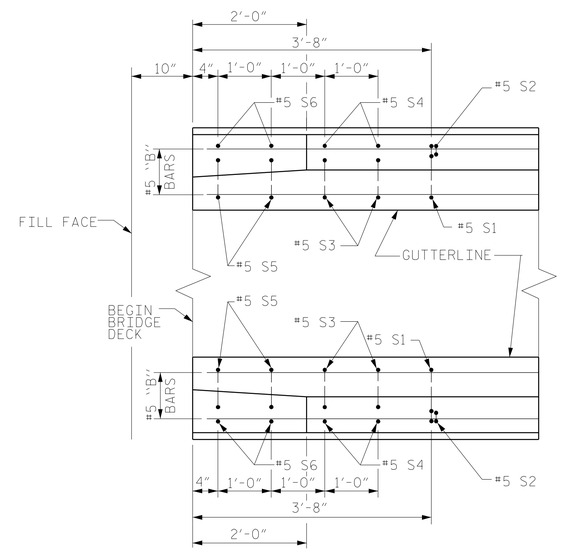

PLAN

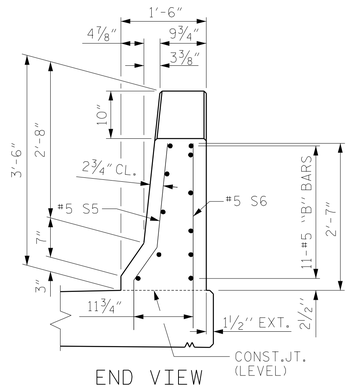

END VIEW

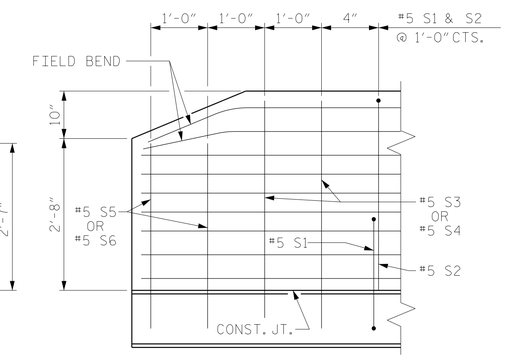

SIDE VIEW

END OF RAIL DETAILS

FOR ADHESIVE ANCHORING AT SAWED JOINTS

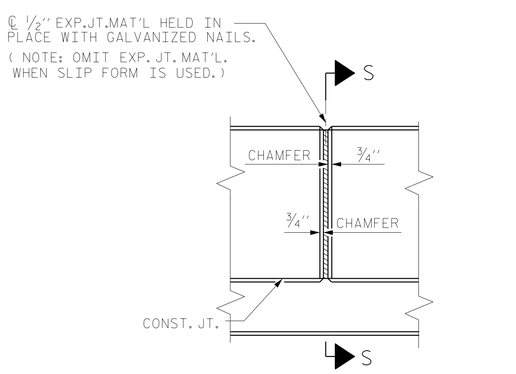

ELEVATION AT EXPANSION JOINTS

BARRIER RAIL DETAILS

PROJECT NO. R-2519B

YANCEY/MITCHELL COUNTY

STATION: 122+22.50 -L-

SHEET 2 OF 2

NORTH CAROLINA PROFESSIONAL SEAL 18442 ENGINEER RICHARD LEON BOLLINGER JR.

Digitally signed by Richard L Bollinger
Date: 2014.08.26 16:09:13 -04'00'

RS&H IMPROVING YOUR WORLD

RS&H Architects-Engineers-Planners, Inc.
8601 Six Forks Road, Suite 260
Raleigh, NC 27615
919-846-5701 FAX 919-846-9080
www.rsandh.com
North Carolina License Nos. 50073 * F-0493 * C-28

STATE OF NORTH CAROLINA
DEPARTMENT OF TRANSPORTATION
RALEIGH

CONCRETE BARRIER RAIL DETAILS & BILL OF MATERIAL

RIGHT LANE

REVISIONS						SHEET NO.
NO.	BY:	DATE:	NO.	BY:	DATE:	S-115
1			3			TOTAL SHEETS
2			4			194

DRAWN BY : MKO DATE : 03/2013
CHECKED BY : JMR DATE : 04/2013
DESIGN ENGINEER OF RECORD : JMR DATE : 04/2013

DWG. No. 061