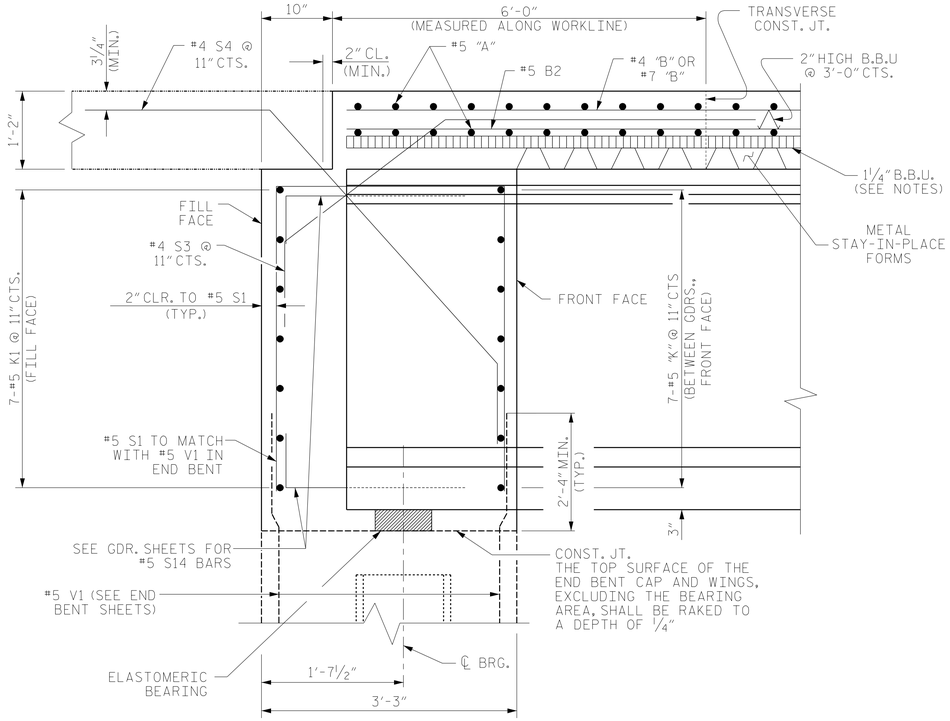

SECTION THRU END BENT

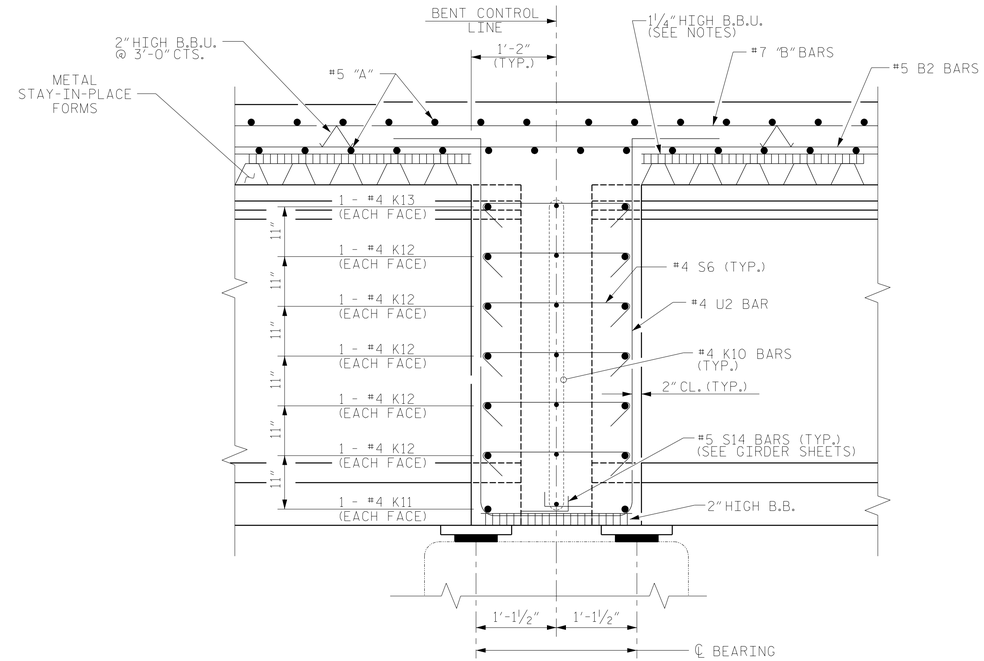

SECTION THRU CONTINUOUS BENT DIAPHRAGM

NOTES

FOR NOTES, SEE SHEET 1 OF 3.

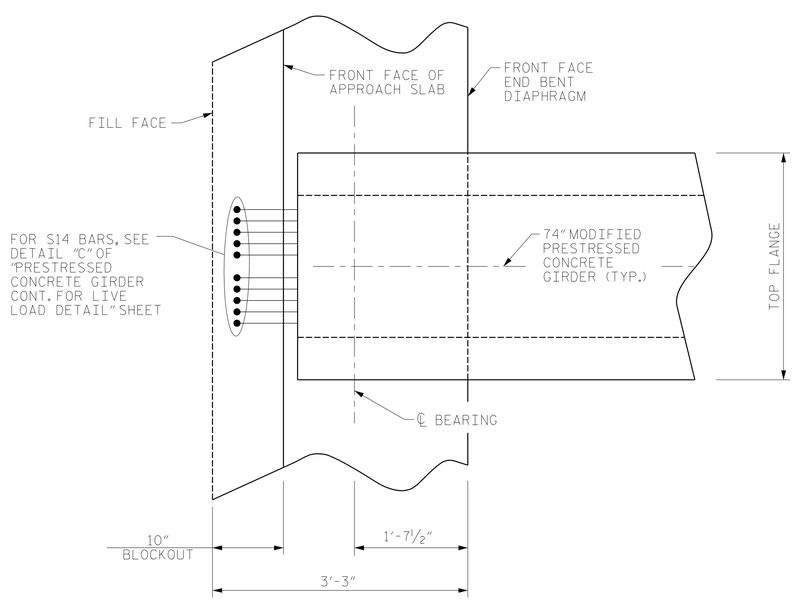

PLAN OF GIRDER @ INTEGRAL END BENT

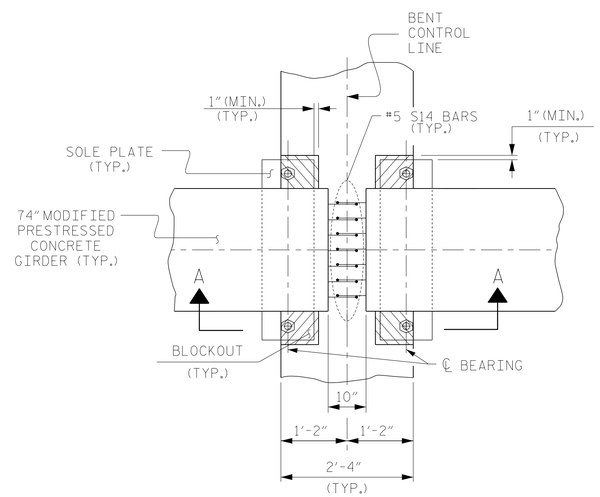

PLAN VIEW

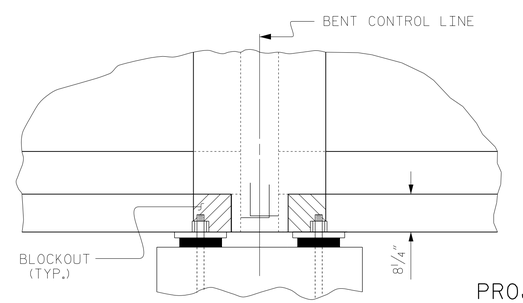

SECTION A-A

BENT DIAPHRAGM BLOCKOUT DETAIL

(PRESTRESSED GIRDERS WITH CONTINUOUS DECK SLAB)

PROJECT NO. R-2519B

YANCEY/MITCHELL COUNTY

STATION: 122+22.50 -L-

SHEET 3 OF 3

DRAWN BY : MKO	DATE : 04/2013
CHECKED BY : JMR	DATE : 04/2013
DESIGN ENGINEER OF RECORD : JMR	DATE : 04/2013

DWG. No. 045

NORTH CAROLINA PROFESSIONAL SEAL 18442 ENGINEER RICHARD LEON BOLLINGER, JR.

Digitally signed by Richard L Bollinger
Date: 2014.08.26 15:57:46 -04'00'

RS&H IMPROVING YOUR WORLD

RS&H Architects-Engineers-Planners, Inc.
8601 Six Forks Road, Suite 260
Raleigh, NC 27615
919-846-6701 FAX 919-846-9080
www.rsandh.com
North Carolina License Nos. 50073 * F-0493 * C-28

STATE OF NORTH CAROLINA
DEPARTMENT OF TRANSPORTATION
RALEIGH
PRELIMINARY

TYPICAL SECTION DETAILS

RIGHT LANE

REVISIONS						SHEET NO.
NO.	BY:	DATE:	NO.	BY:	DATE:	S-99
1			3			TOTAL SHEETS
2			4			194