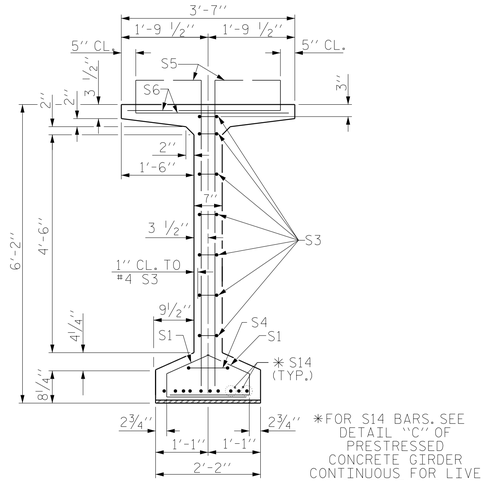

*FOR S14 BARS. SEE DETAIL "C" OF PRESTRESSED CONCRETE GIRDER CONTINUOUS FOR LIVE LOAD DETAILS SHEET

SECTION B-B

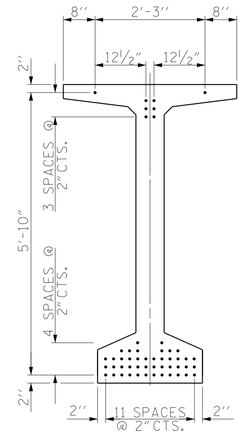

AT END OF GIRDER

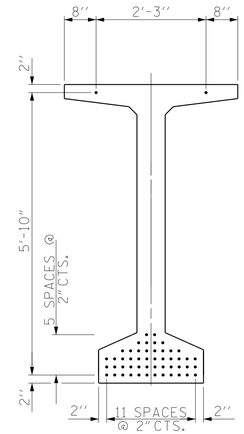

AT ℄ OF GIRDER

0.6" Ø LOW RELAXATION STRAND LAYOUT

THE UPLIFT FORCE DUE TO DRAPED STRANDS IS 19.7 KIPS

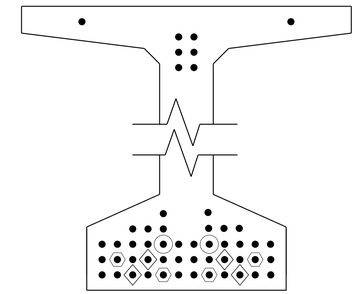

DEBONDING LEGEND

- FULLY BONDED STRANDS
- STRANDS DEBONDED FOR 8'-0" FROM END OF GIRDER
- STRANDS DEBONDED FOR 10'-0" FROM END OF GIRDER
- STRANDS DEBONDED FOR 12'-0" FROM END OF GIRDER

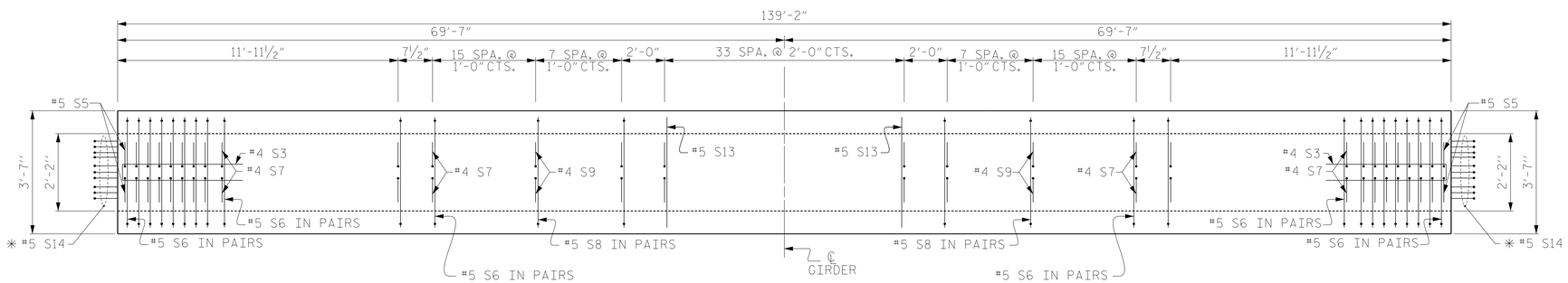

PLAN OF GIRDER

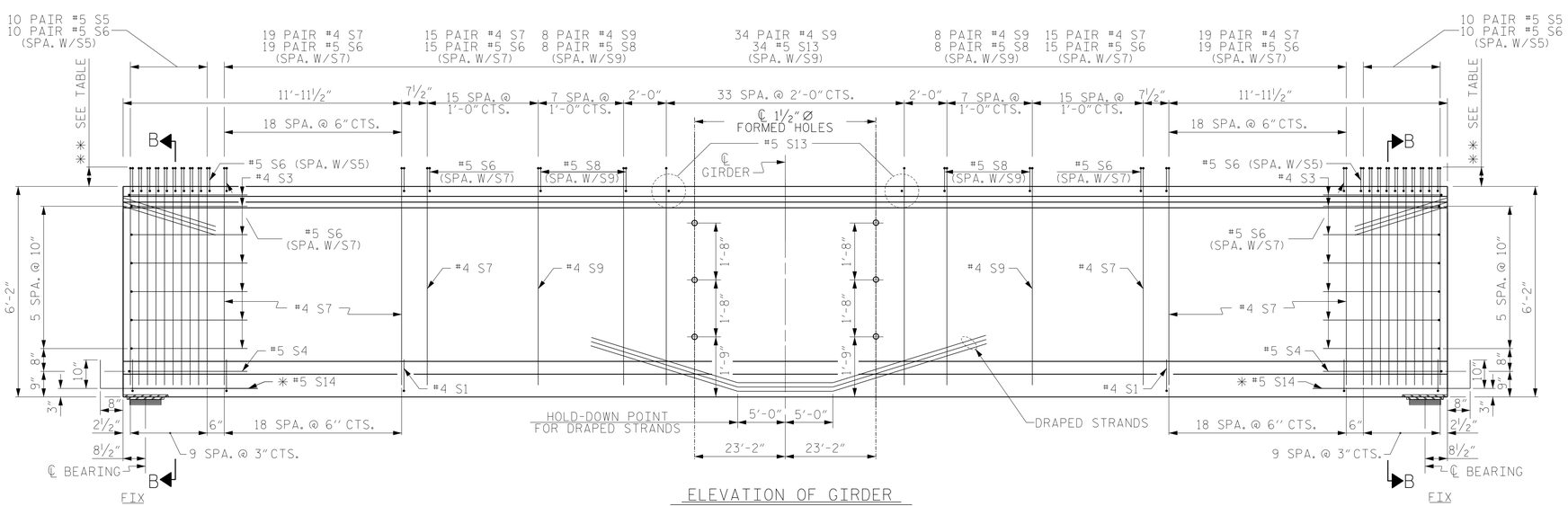

ELEVATION OF GIRDER

FOR REINFORCING STEEL AROUND FORMED HOLE, SEE "PRESTRESSED CONCRETE GIRDER CONTINUOUS FOR LIVE LOAD DETAILS "SHEET.

TABLE	
BAR TYPE	**
S5 & S6	8 1/2"
S7 & S6	8 1/2"
S9 & S8	8"

0.6" Ø L. R. GRADE 270 STRANDS

AREA (SQUARE INCHES)	ULTIMATE STRENGTH (LBS. PER STRAND)	APPLIED PRESTRESS (LBS. PER STRAND)
0.217	58,600	43,950

REINFORCING STEEL FOR ONE GIRDER

BAR	NUMBER	SIZE	TYPE	LENGTH	WEIGHT
S1	116	#4	1	3'-2"	245
S3	14	#4	2	8'-5"	79
S4	2	#5	2	9'-0"	19
S5	40	#5	3	7'-1"	296
S6	176	#5	4	4'-3"	780
S7	136	#4	3	7'-0"	636
S8	32	#5	4	4'-2"	139
S9	100	#4	3	6'-11"	462
S13	34	#5	STR	3'-3"	115
* S14	20	#5	STR	3'-8"	76
S15	16	#5	STR	8'-0"	134
S16	8	#5	2	12'-0"	100

* NOTE: S14 BAR SHALL BE BENT BEFORE SHIPMENT, HEAT BENDING SHALL NOT BE ALLOWED.

BAR TYPES

ALL BAR DIMENSIONS ARE OUT-TO-OUT

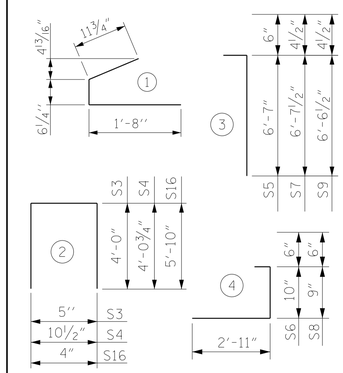

QUANTITIES FOR ONE GIRDER

	REINFORCING STEEL	10000 PSI CONCRETE	0.6" Ø L.R. STRANDS
	LB.	C.Y.	No.
	3081	31.7	52

GIRDERS REQUIRED

NUMBER	LENGTH	TOTAL LENGTH
4	139'-2"	556'-8"

PROJECT NO. R-2519B

YANCEY/MITCHELL COUNTY

STATION: 122+22.50 -L-

SHEET 2 OF 3

DRAWN BY :	JML	DATE :	4/2013
CHECKED BY :	JMR	DATE :	4/2013
DESIGN ENGINEER OF RECORD :	JMR	DATE :	7/2013

DWG. No. 054

NORTH CAROLINA PROFESSIONAL SEAL 18442 ENGINEER RICHARD LEON BOLLINGER JR.

Digitally signed by Richard L Bollinger
Date: 2014.10.03 15:53:35 -04'00'

RS&H IMPROVING YOUR WORLD

RS&H Architects-Engineers-Planners, Inc.
8601 Six Forks Road, Suite 260
Raleigh, NC 27615
919-846-6701 FAX 919-846-9080
www.rsandh.com
North Carolina License Nos. 50073 * F-0493 * C-28

STATE OF NORTH CAROLINA
DEPARTMENT OF TRANSPORTATION
RALEIGH

SUPERSTRUCTURE

74" MODIFIED PRESTRESSED CONCRETE GIRDER

SPAN B
RIGHT LANE

REVISIONS						
NO.	BY:	DATE:	NO.	BY:	DATE:	
1			3			
2			4			

SHEET NO. S-108

TOTAL SHEETS 194