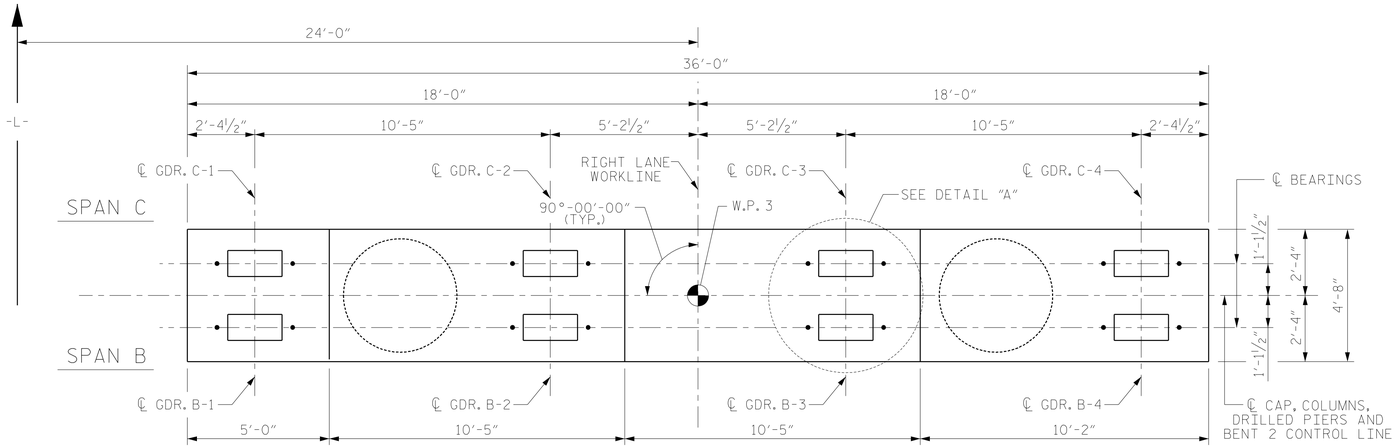

PLAN

NOTES:

FOR SECTION A-A, VIEW B-B, SECTION C-C AND VIEW D-D, SEE SHEET 2 OF 2.

FOR REINFORCING BILL OF MATERIAL, SEE SHEET 2 OF 2.

STIRRUPS AND "U" BARS IN CAP MAY BE SHIFTED AS NECESSARY TO CLEAR ANCHOR BOLTS.

HOOKS ON "V" BARS MAY BE TURNED AS NECESSARY FOR PLACING REINFORCING STEEL.

ALL STEEL IN THE DRILLED PIERS IS INCLUDED IN THE PAY ITEMS FOR "REINFORCING STEEL" AND "SPIRAL COLUMN REINFORCING STEEL."

* INVERT ALTERNATE #6 S1 STIRRUPS.

THE CONTRACTORS ATTENTION IS CALLED TO THE FACT THAT THE LONGITUDINAL REINFORCEMENT FOR THE DRILLED PIERS IS DETAILED WITH 3 FEET OF EXTRA LENGTH.

THE LOCATION OF THE CONSTRUCTION JOINT IN THE DRILLED PIERS IS BASED ON AN APPROXIMATE GROUND LINE ELEVATION. IF THE CONSTRUCTION JOINT IS ABOVE THE ACTUAL GROUND ELEVATION, THE CONTRACTOR SHALL PLACE THE CONSTRUCTION JOINT 1 FOOT BELOW THE GROUND LINE.

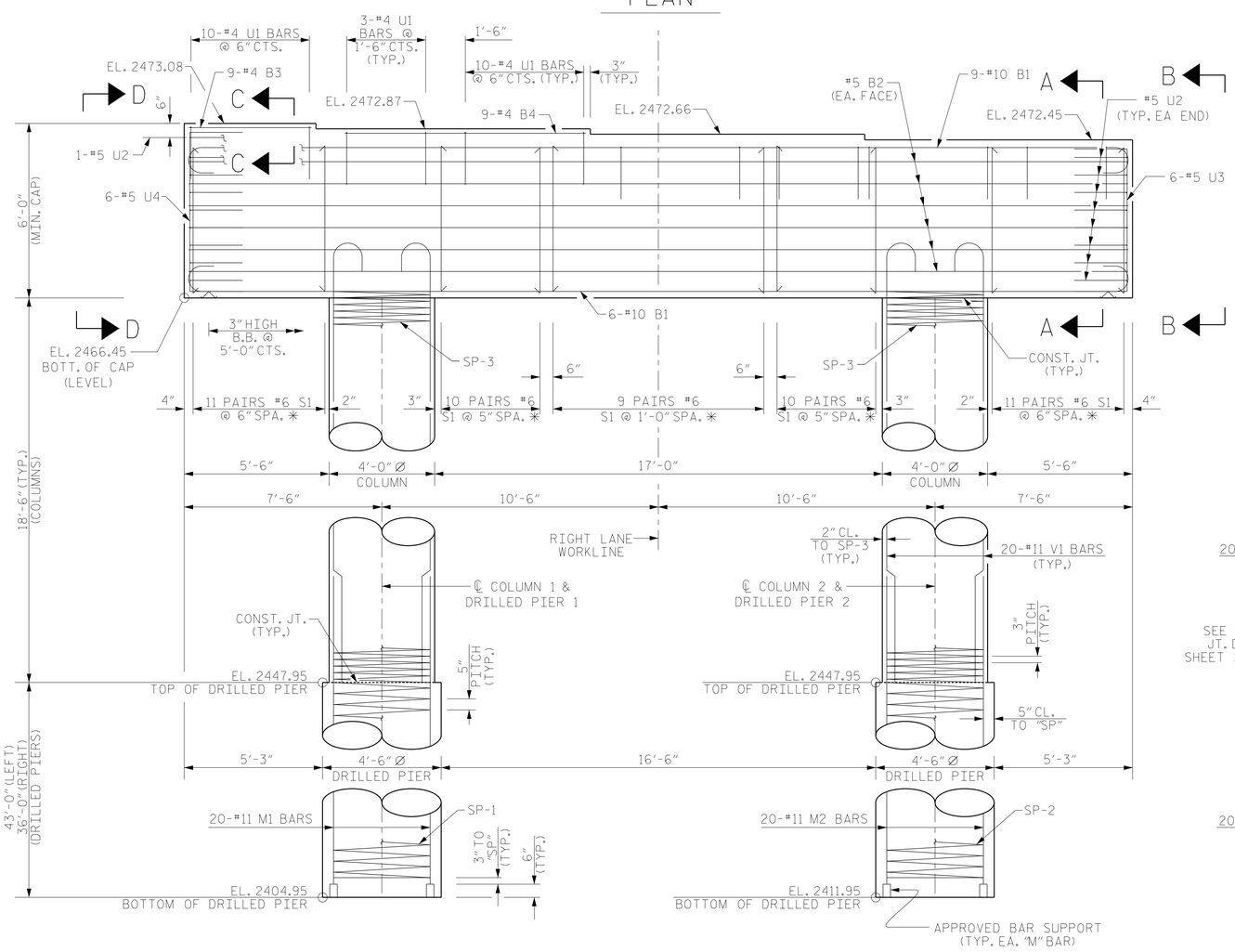

ELEVATION

LOOKING AHEAD ON STATION

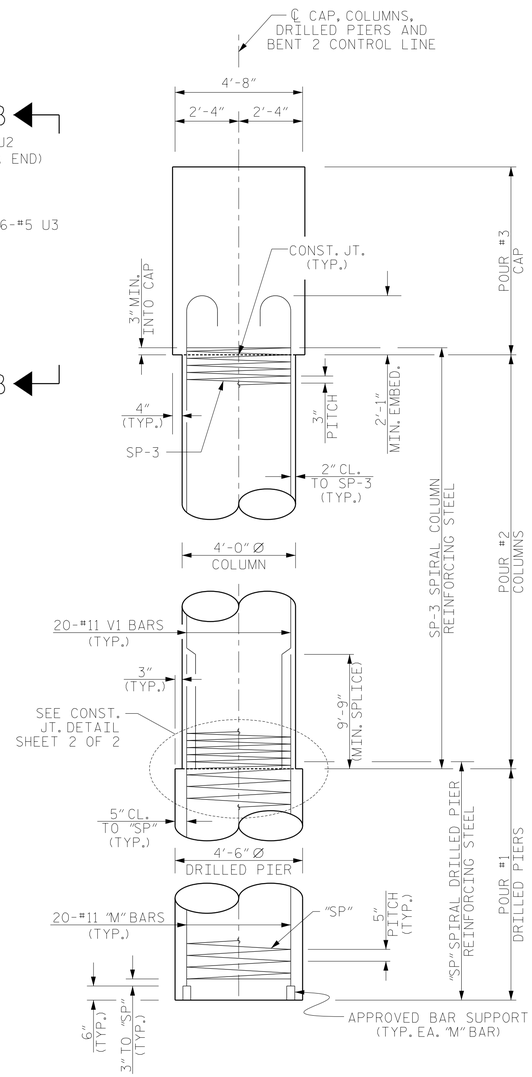

END ELEVATION

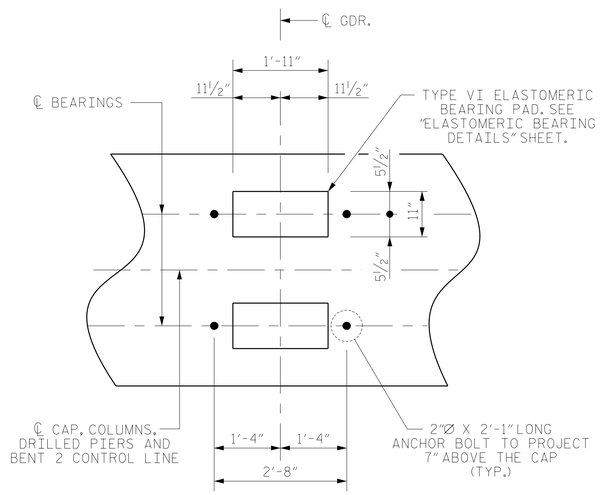

DETAIL "A"

DIMENSIONS ARE TYPICAL FOR EACH GIRDER

PROJECT NO. R-2519B

YANCEY/MITCHELL COUNTY

STATION: 122+22.50 -L-

SHEET 1 OF 2

DRAWN BY : MKO	DATE : 04/2013		
CHECKED BY : JMR	DATE : 07/2013		
DESIGN ENGINEER OF RECORD : JMR	DATE : 07/2013		

DWG. No. 069

NORTH CAROLINA PROFESSIONAL SEAL 18442 ENGINEER RICHARD LEON BOLLINGER JR.

Digitally signed by Richard L Bollinger
Date: 2014.08.26 16:14:34 -04'00'

RS&H IMPROVING YOUR WORLD

RS&H Architects-Engineers-Planners, Inc.
8601 Six Forks Road, Suite 260
Raleigh, NC 27615
919-846-6701 FAX 919-846-9080
www.rsandh.com
North Carolina License Nos. 50073 * F-0493 * C-28

STATE OF NORTH CAROLINA
DEPARTMENT OF TRANSPORTATION
RALEIGH

SUBSTRUCTURE

BENT 2
PLAN AND ELEVATION

RIGHT LANE

REVISIONS						SHEET NO.
NO.	BY:	DATE:	NO.	BY:	DATE:	S-123
1			3			TOTAL SHEETS
2			4			194