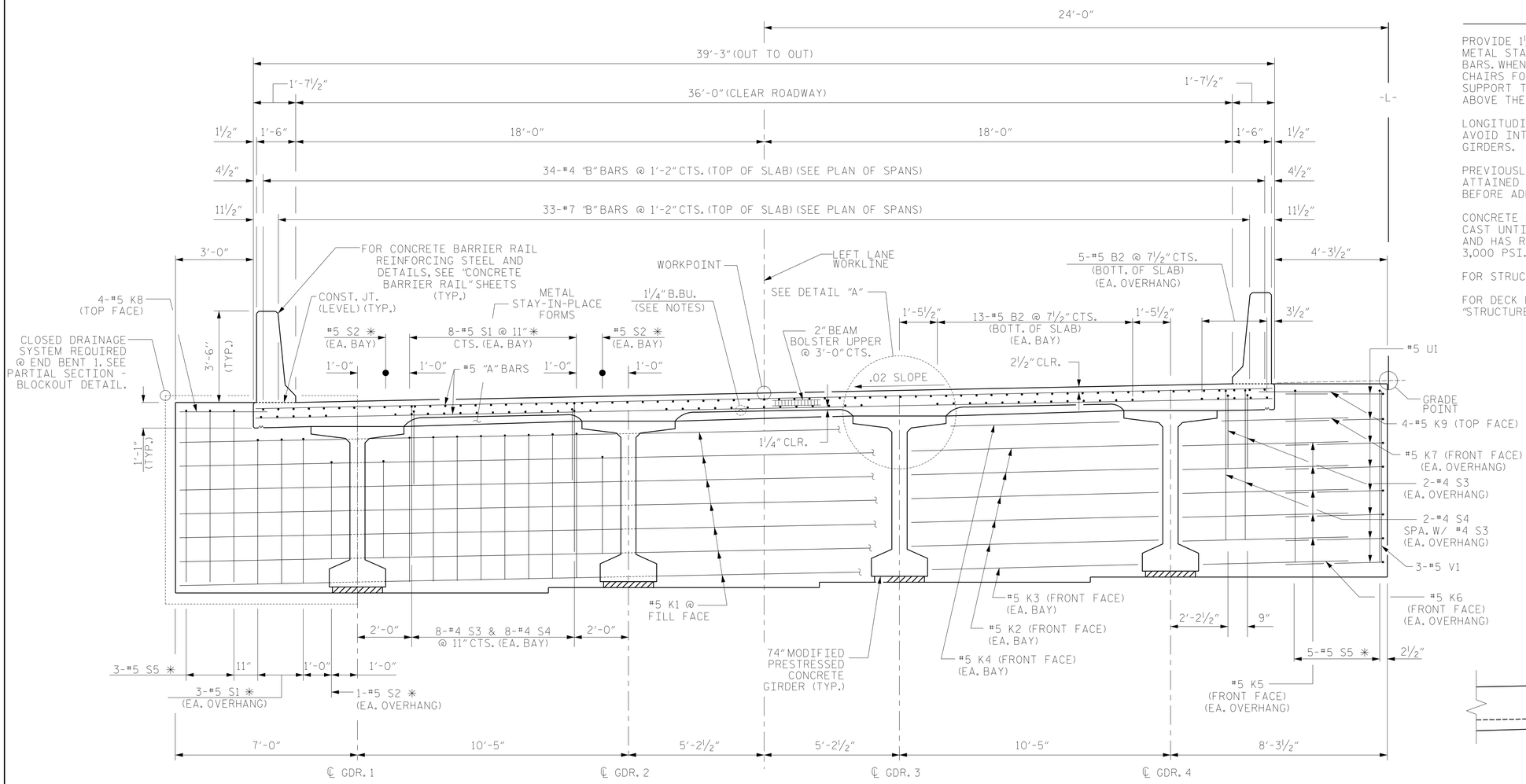

TYPICAL SECTION AT INTEGRAL END BENTS

END BENT 1 SHOWN, END BENT 2 SIMILAR
* "S" BARS TO MATCH WITH "V" BARS IN INTEGRAL END BENT CAP

NOTES

PROVIDE 1¼" HIGH BEAM BOLSTERS UPPER AT 4'-0" CTS. ATOP THE METAL STAY-IN-PLACE FORMS TO SUPPORT THE BOTTOM MAT OF 'A' BARS. WHEN USING REMOVABLE FORMS, PROVIDE CONTINUOUS HIGH CHAIRS FOR METAL DECK (C.H.C.M.) @ 4'-0" CTS. WITH A HEIGHT TO SUPPORT THE BOTTOM MAT OF 'A' BARS A CLEAR DISTANCE OF 2½" ABOVE THE TOP OF THE REMOVABLE FORM.

LONGITUDINAL STEEL MAY BE SHIFTED SLIGHTLY, AS NECESSARY, TO AVOID INTERFERENCE WITH STIRRUPS IN PRESTRESSED CONCRETE GIRDERS.

PREVIOUSLY CAST CONCRETE IN A CONTINUOUS UNIT SHALL HAVE ATTAINED A MINIMUM COMPRESSIVE STRENGTH OF 3,000 PSI BEFORE ADDITIONAL CONCRETE IS CAST IN THE UNIT.

CONCRETE BARRIER RAIL IN A CONTINUOUS UNIT SHALL NOT BE CAST UNTIL ALL SLAB CONCRETE IN THAT UNIT HAS BEEN CAST AND HAS REACHED AT MINIMUM COMPRESSIVE STRENGTH OF 3,000 PSI.

FOR STRUCTURE DRAINAGE SYSTEM, SEE SPECIAL PROVISIONS.

FOR DECK DRAINS AND CLOSED DRAINAGE SYSTEM DETAILS, SEE "STRUCTURE DRAINAGE SYSTEM DETAIL" SHEETS.

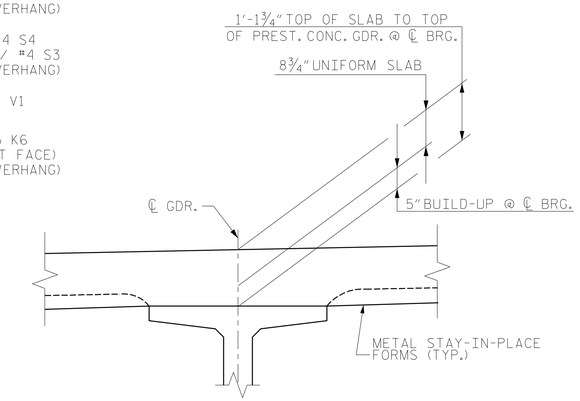

DETAIL "A"

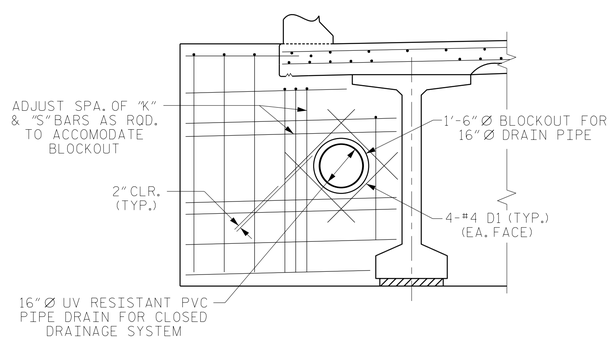

PARTIAL SECTION - BLOCKOUT DETAIL

END BENT 1 ONLY

PROJECT NO. R-2519B
YANCEY/MITCHELL COUNTY
STATION: 122+22.50 -L-

SHEET 1 OF 3

DRAWN BY :	MKO	DATE :	04/2013
CHECKED BY :	JMR	DATE :	04/2013
DESIGN ENGINEER OF RECORD :	JMR	DATE :	04/2013

DWG. No. 005

NORTH CAROLINA PROFESSIONAL SEAL 18442 ENGINEER RICHARD LEON BOLLINGER JR.

Digitally signed by Richard L Bollinger
Date: 2014.08.26 14:51:39 -04'00'

RS&H IMPROVING YOUR WORLD

RS&H Architects-Engineers-Planners, Inc.
8601 Six Forks Road, Suite 260
Raleigh, NC 27615
919-846-6701 FAX 919-846-9080
www.rsandh.com
North Carolina License Nos. 50073 * F-0493 * C-28

STATE OF NORTH CAROLINA
DEPARTMENT OF TRANSPORTATION
RALEIGH

SUPERSTRUCTURE

TYPICAL SECTION

LEFT LANE

REVISIONS							SHEET NO.
NO.	BY:	DATE:	NO.	BY:	DATE:		S-59
1			3				TOTAL SHEETS
2			4				194