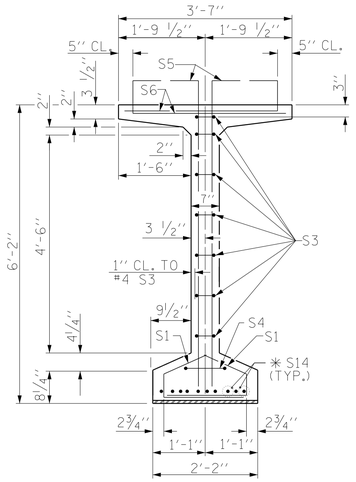

SECTION A-A

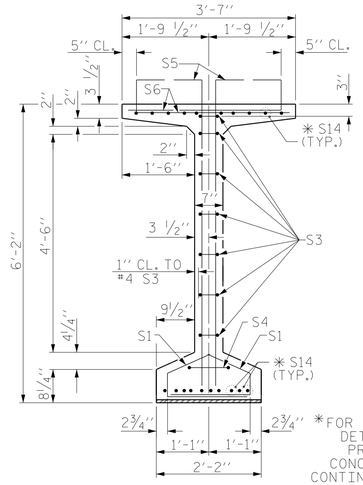

✱FOR S14 BARS. SEE DETAIL "C" OF PRESTRESSED CONCRETE GIRDER CONTINUOUS FOR LIVE LOAD DETAILS SHEET

SECTION B-B

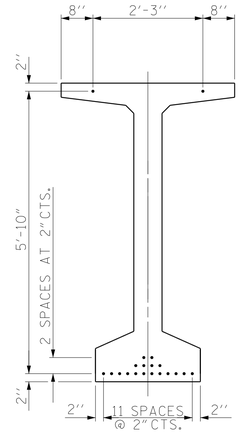

0.6" Ø LOW RELAXATION STRAND LAYOUT

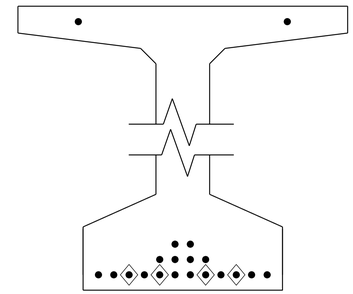

DEBONDING LEGEND

- ● FULLY BONDED STRANDS
- ◈ STRANDS DEBONDED FOR 10'-0" FROM END OF GIRDER

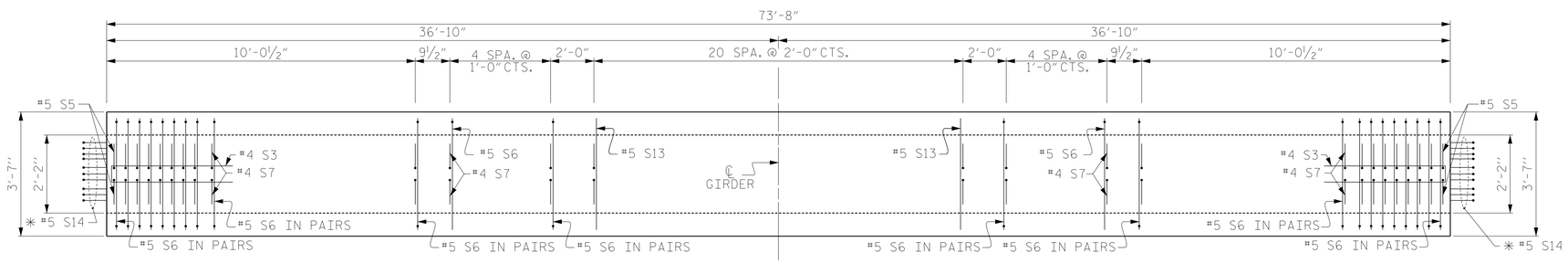

PLAN OF GIRDER

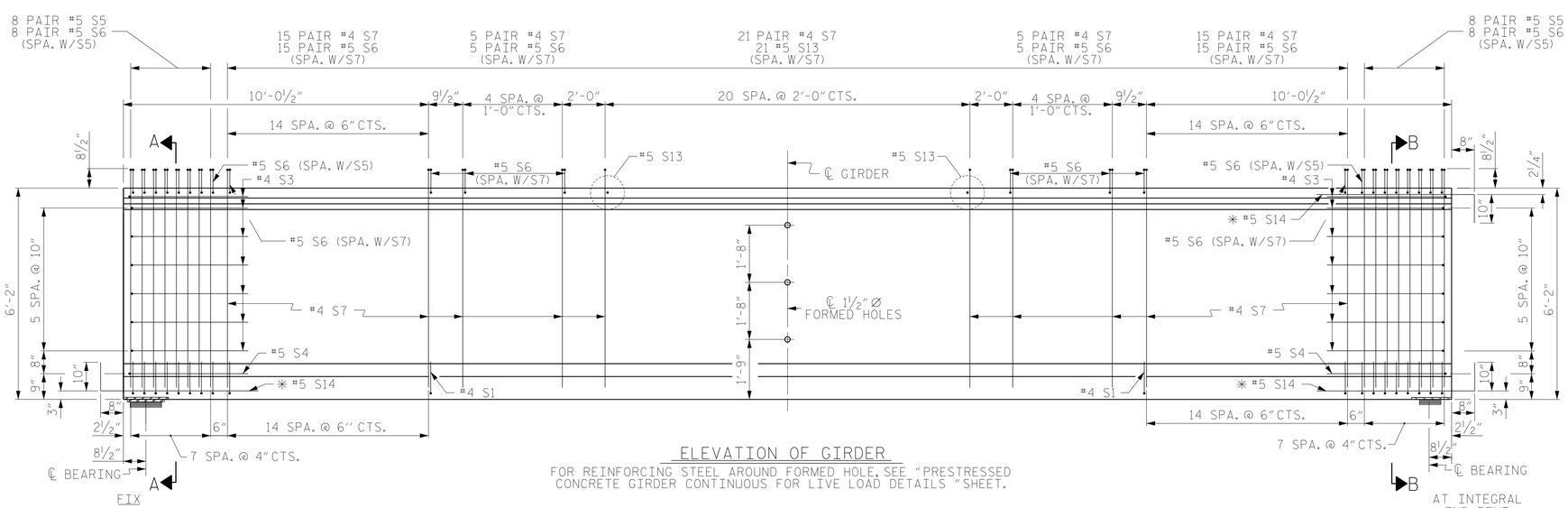

ELEVATION OF GIRDER

FOR REINFORCING STEEL AROUND FORMED HOLE, SEE "PRESTRESSED CONCRETE GIRDER CONTINUOUS FOR LIVE LOAD DETAILS "SHEET.

0.6" Ø L. R. GRADE 270 STRANDS

AREA (SQUARE INCHES)	ULTIMATE STRENGTH (LBS. PER STRAND)	APPLIED PRESTRESS (LBS. PER STRAND)
0.217	58,600	43,950

REINFORCING STEEL FOR ONE GIRDER

BAR	NUMBER	SIZE	TYPE	LENGTH	WEIGHT
S1	92	#4	1	3'-2"	195
S3	14	#4	2	8'-5"	79
S4	2	#5	2	9'-0"	19
S5	32	#5	3	7'-1"	239
S6	112	#5	4	4'-3"	496
S7	122	#4	3	7'-0"	570
S13	21	#5	STR	3'-3"	71
✱ S14	30	#5	STR	3'-8"	115
S15	8	#5	STR	8'-0"	67
S16	4	#5	2	12'-0"	50

✱ NOTE: S14 BAR SHALL BE BENT BEFORE SHIPMENT, HEAT BENDING SHALL NOT BE ALLOWED.

BAR TYPES

ALL BAR DIMENSIONS ARE OUT-TO-OUT

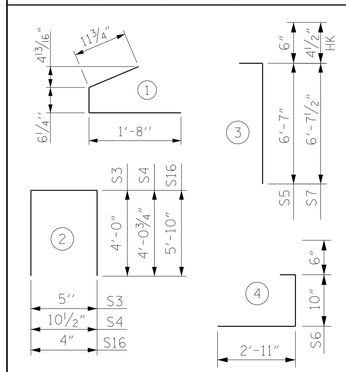

QUANTITIES FOR ONE GIRDER

	REINFORCING STEEL	10000 PSI CONCRETE	0.6" Ø L.R. STRANDS
	LB.	C.Y.	No.
	1901	16.8	20

GIRDERS REQUIRED

NUMBER	LENGTH	TOTAL LENGTH
4	73'-8"	294'-8"

PROJECT NO. R-2519B

YANCEY/MITCHELL COUNTY

STATION: 122+22.50 -L-

SHEET 3 OF 3

STATE OF NORTH CAROLINA
DEPARTMENT OF TRANSPORTATION
RALEIGH

SUPERSTRUCTURE

74" MODIFIED PRESTRESSED CONCRETE GIRDER

SPAN C
LEFT LANE

NORTH CAROLINA PROFESSIONAL SEAL 18442 ENGINEER RICHARD LEON BOLLINGER, JR.

Digitally signed by Richard L Bollinger
Date: 2014.10.03 15:51:08 -04'00'

RS&H IMPROVING YOUR WORLD

RS&H Architects-Engineers-Planners, Inc.
8601 Six Forks Road, Suite 260
Raleigh, NC 27615
919-846-6701 FAX 919-846-9080
www.rsandh.com
North Carolina License Nos. 50073 * F-0493 * C-28

REVISIONS						
NO.	BY:	DATE:	NO.	BY:	DATE:	
1			3			
2			4			

SHEET NO. S-71

TOTAL SHEETS 194

DRAWN BY : JML DATE : 4/2013
CHECKED BY : JMR DATE : 4/2013
DESIGN ENGINEER OF RECORD : JMR DATE : 7/2013

DWG. No. 017