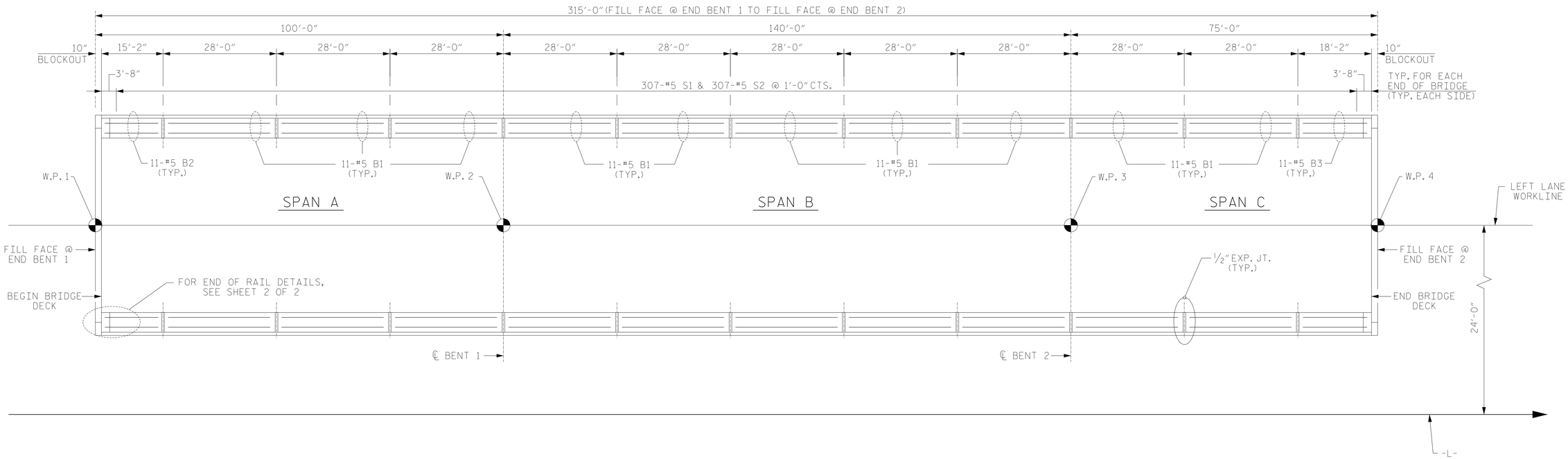

PLAN OF BARRIER RAIL

DIMENSIONS AND REINFORCEMENT ARE TYPICAL EACH SIDE.

PROJECT NO. R-2519B
YANCEY/MITCHELL COUNTY
STATION: 122+22.50 -L-

SHEET 1 OF 2

NORTH CAROLINA PROFESSIONAL SEAL 18442 ENGINEER RICHARD LEON BOLLINGER, JR.

Digitally signed by Richard L Bollinger
Date: 2014.08.26 15:38:25 -04'00'

RS&H IMPROVING YOUR WORLD

RS&H Architects-Engineers-Planners, Inc.
8601 Six Forks Road, Suite 260
Raleigh, NC 27615
919-846-5701 FAX 919-846-9080
www.rsandh.com
North Carolina License Nos. 50073 * F-0493 * C-28

STATE OF NORTH CAROLINA
DEPARTMENT OF TRANSPORTATION
RALEIGH

CONCRETE
BARRIER RAIL
SPANS A, B & C

LEFT LANE

REVISIONS						SHEET NO.
NO.	BY:	DATE:	NO.	BY:	DATE:	S-76
1			3			TOTAL SHEETS
2			4			194

DRAWN BY : MKO DATE : 03/2013
CHECKED BY : JMR DATE : 04/2013
DESIGN ENGINEER OF RECORD : JMR DATE : 04/2013

DWG. No. 022