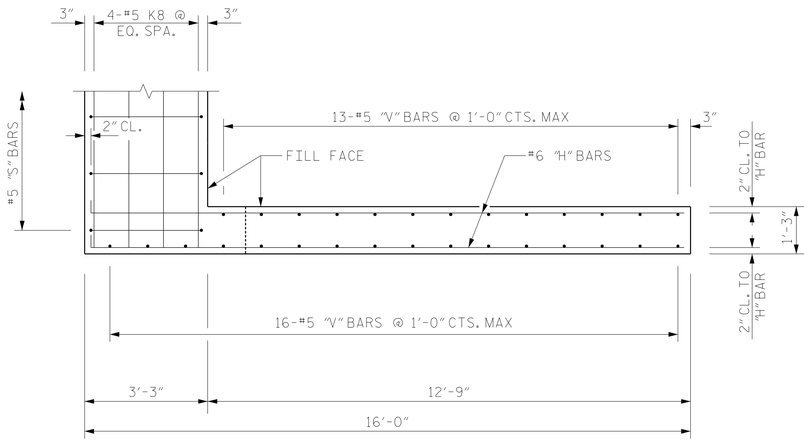

PLAN OF WING - W1

WING AT END BENT 1 SHOWN, WING @ END BENT 2 SIMILAR

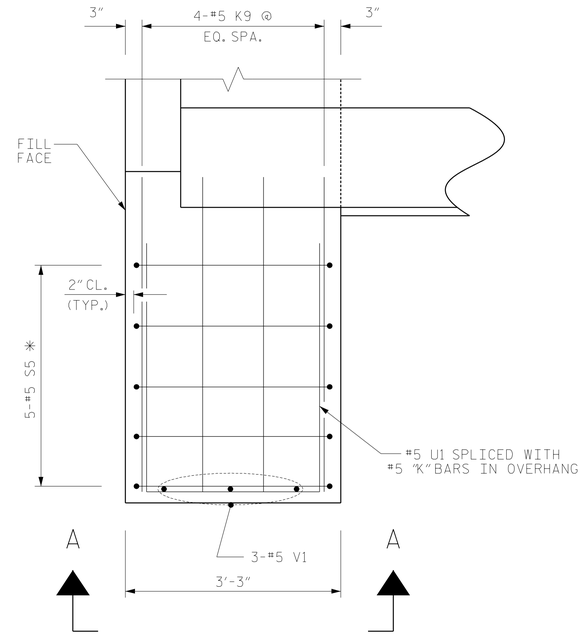

PLAN - RT. END OF CAP

END BENT 1 SHOWN, END BENT 2 SIMILAR

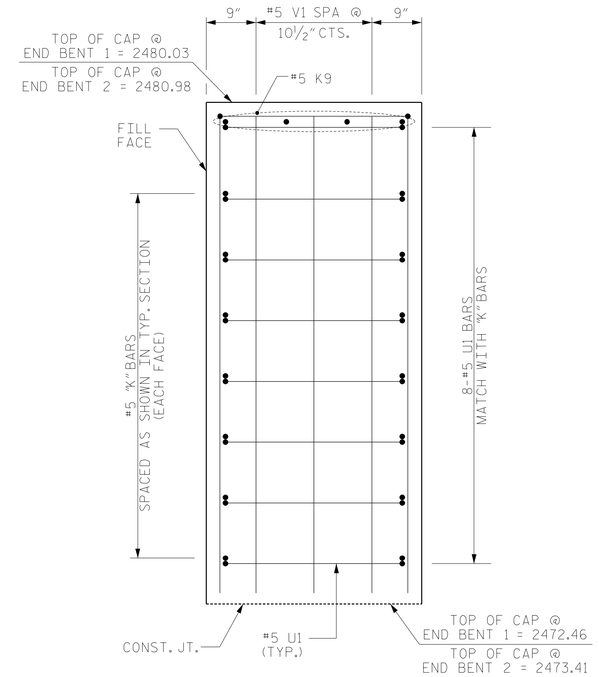

VIEW A-A - RT. END OF CAP

END BENT 1 SHOWN, END BENT 2 SIMILAR

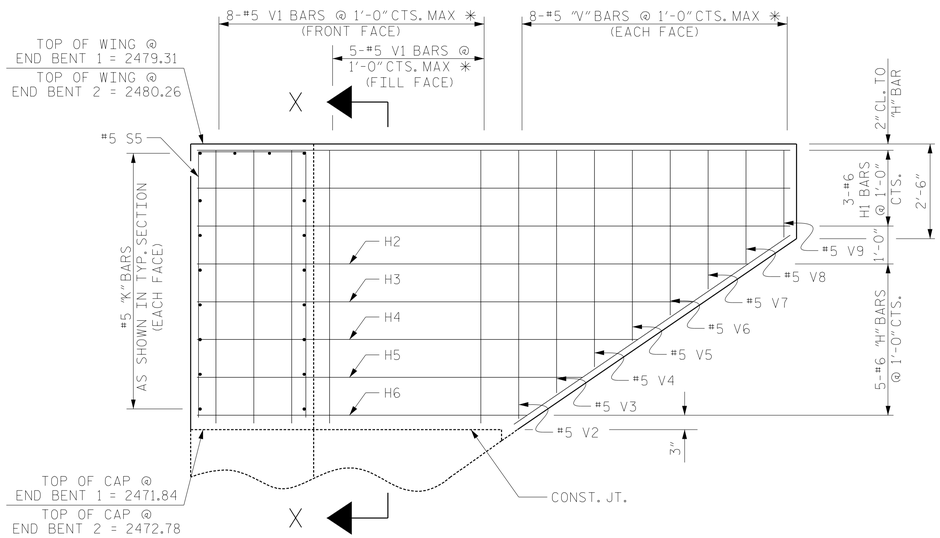

ELEVATION OF WING - W1

* "V" BARS IN UPPER WING MATCH WITH "V" BARS FROM INTEGRAL BENT CAP

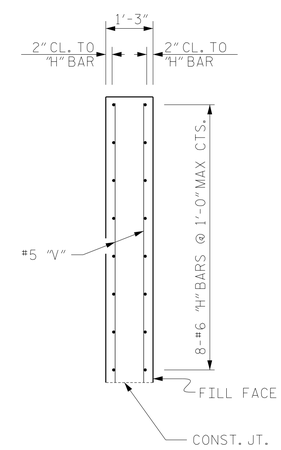

SECTION X-X

PROJECT NO. R-2519B

YANCEY/MITCHELL COUNTY

STATION: 122+22.50 -L-

SHEET 3 OF 3

DRAWN BY : MKO	DATE : 05/2013		
CHECKED BY : JMR	DATE : 07/2013		
DESIGN ENGINEER OF RECORD : JMR	DATE : 07/2013		

NORTH CAROLINA PROFESSIONAL SEAL 18442 ENGINEER RICHARD LEON BOLLINGER, JR.

Digitally signed by Richard L Bollinger
Date: 2014.08.26 14:57:18 -04'00'

RS&H IMPROVING YOUR WORLD

RS&H Architects-Engineers-Planners, Inc.
8601 Six Forks Road, Suite 260
Raleigh, NC 27615
919-846-6701 FAX 919-846-9080
www.rsandh.com
North Carolina License Nos. 50073 * F-0453 * C-28

DWG. No. 010

STATE OF NORTH CAROLINA
DEPARTMENT OF TRANSPORTATION
RALEIGH

SUBSTRUCTURE

PLAN OF SPAN DETAILS

LEFT LANE

REVISIONS						SHEET NO.
NO.	BY:	DATE:	NO.	BY:	DATE:	S-64
1			3			TOTAL SHEETS
2			4			194