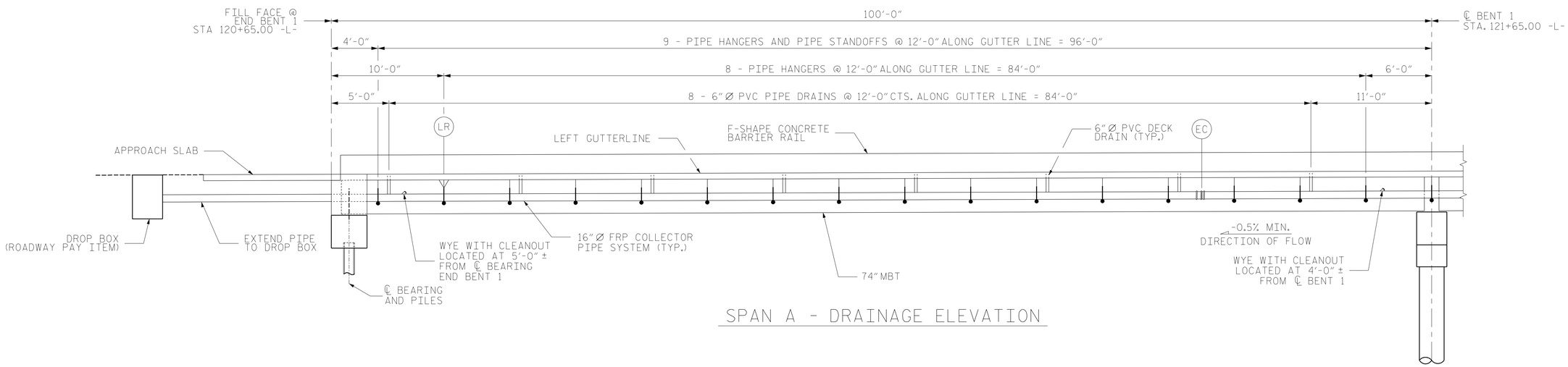

SPAN A - DRAINAGE ELEVATION

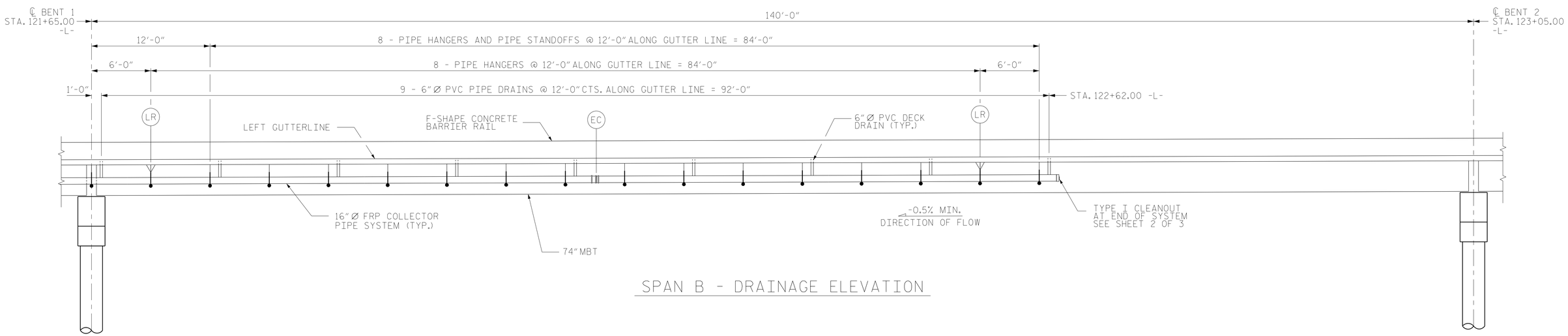

SPAN B - DRAINAGE ELEVATION

PROJECT NO. R-2519B
YANCEY/MITCHELL COUNTY
STATION: 122+22.50 -L-

SHEET 1 OF 3

NOTES:

EC = EXPANSION COUPLER (SEE SHEET 3 OF 3)
LR = LONGITUDINAL RESTRAINT (SEE SHEET 2 OF 3)

DISTANCE BETWEEN THE LONGITUDINAL RESTRAINT AND EXPANSION COUPLER SHALL NOT EXCEED 120'-0".

DRAWN BY :	JML	DATE :	7/2013
CHECKED BY :	JMR	DATE :	7/2013
DESIGN ENGINEER OF RECORD :	JMR	DATE :	7/2013

DWG. No. 011

NORTH CAROLINA PROFESSIONAL SEAL 18442 ENGINEER RICHARD LEON BOLLINGER JR.

Digitally signed by Richard L Bollinger
Date: 2014.08.26 14:58:28 -04'00'

RS&H IMPROVING YOUR WORLD

RS&H Architects-Engineers-Planners, Inc.
8601 Six Forks Road, Suite 260
Raleigh, NC 27615
919-846-6701 FAX 919-846-9080
www.rsandh.com
North Carolina License Nos. 50072 * F-0493 * C-28

STATE OF NORTH CAROLINA
DEPARTMENT OF TRANSPORTATION
RALEIGH

SUPERSTRUCTURE
STRUCTURE DRAINAGE SYSTEM ELEVATION OF DRAINAGE SYSTEM

LEFT LANE

REVISIONS							SHEET NO.
NO.	BY:	DATE:	NO.	BY:	DATE:		S-65
1			3				TOTAL SHEETS
2			4				194