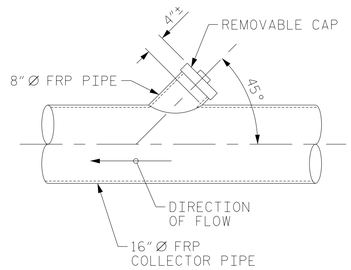

CLEANOUT DETAIL

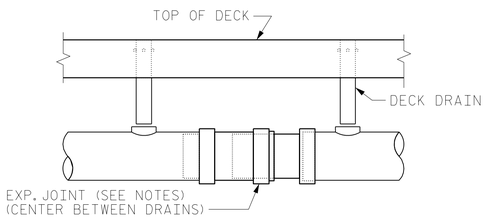

EXPANSION COUPLER

DRAINAGE SYSTEM NOTES

THE ENTIRE COST FOR THE LABOR AND MATERIALS NECESSARY TO FABRICATE AND INSTALL FRP PIPE, PIPE SUPPORT AND PIPE ANCHOR ASSEMBLIES SHALL BE INCLUDED IN THE LUMP SUM PRICE BID FOR THE "STRUCTURE DRAINAGE SYSTEM." SEE SPECIAL PROVISIONS FOR STRUCTURE DRAINAGE SYSTEM.

ALL COLLECTOR PIPES, ELBOWS, COUPLERS, AND TEES SHALL BE FIBERGLASS REINFORCED PLASTIC PIPE MEETING THE SPECIFICATIONS OF ASTM D2996 AND THE ACCELERATED UV WEATHERING PERFORMANCE REQUIREMENTS OF ASTM D4329-05 PER PROCEDURE ASTM G154.

EACH PIPE SECTION SHALL HAVE A MINIMUM OF TWO HANGERS.

COLLECTOR PIPE SHALL BE SUPPORTED FROM THE CONCRETE DECK SLAB. NO ATTACHMENT TO THE GIRDERS WILL BE PERMITTED.

CONTRACTOR SHALL PROVIDE FRP COUPLINGS CAPABLE OF HANDLING THE ANTICIPATED MOVEMENTS. ADDITIONALLY FRP COUPLINGS SHALL PROVIDE HORIZONTAL ALIGNMENT TOLERANCES SUCH THAT THE 16"Ø FRP COLLECTOR PIPE AND COUPLINGS CAN CLOSELY FOLLOW THE VERTICAL CURVE OF THE STRUCTURE.

THE CONTRACTOR SHALL BE RESPONSIBLE FOR DETERMINING THE HORIZONTAL AND VERTICAL ALIGNMENT OF THE DRAINAGE SYSTEM USING NECESSARY FITTINGS, TEES, AND WYES TO PROVIDE A CONTINUOUS DRAINAGE SYSTEM.

CONCRETE INSERTS SHALL HAVE A MINIMUM WORKING LOAD TENSION CAPACITY OF 4.5 KIPS.

CONTRACTOR SHALL VERIFY LOCATION OF CONCRETE INSERTS IN REGARD TO ADJACENT INSERTS AND DECK DRAINS. IF SPACING/LOCATION OF INSERTS RESULTS IN REDUCED INSERT CAPACITY, CONTRACTOR SHALL SUBMIT INSERT SYSTEM WITH APPROPRIATE CAPACITY, GIVEN CONSTRAINTS, OR PROVIDED ALTERNATE CONNECTION/SUPPORT DETAIL FOR REVIEW AND APPROVAL OF THE ENGINEER PRIOR TO INSTALLATION.

DECK DRAIN PIPE SHALL BE ASTM D1785, SCHEDULE 40. ALL PVC FITTINGS SHALL BE MINIMUM ASTM D2665, SCHEDULE 40.

EXPANSION JOINT COUPLERS IN THE COLLECTOR PIPE SHALL HAVE A MINIMUM CAPACITY TO ACCOMMODATE 6-INCHES OF TOTAL MOVEMENT (3-INCHES EXPANSION/3-INCHES CONTRACTION).

AN OPTIONAL DETAIL FOR THE LONGITUDINAL RESTRAINTS AND THE LATERAL GUIDE MAY BE SUBMITTED FOR APPROVAL.

COLLECTOR PIPE SUPPORTS SHALL BE LOCATED WITHIN 12-INCHES, ± 4-INCHES, OF A COLLECTOR PIPE JOINT.

DECK DOWN-DRAIN PIPES SHALL BE CENTERED IN SLOTTED OPENING IN COLLECTOR PIPE REGARDLESS OF TEMPERATURE AT TIME OF INSTALLATION.

HANGER RODS SHALL BE ASTM A193, GRADE B7 OR CARBON STEEL ALL-THREAD HANGER RODS.

NUTS SHALL BE ASTM A194, GRADE 2H, HEAVY HEX NUTS.

THE DETAILS OF ALL PIPING, HARDWARE, OR OTHER MATERIAL SHALL BE PROVIDED BY THE CONTRACTOR AND IS SUBJECT TO THE APPROVAL OF THE ENGINEER.

WORKING DRAWINGS FOR THE DRAINAGE SYSTEM AND LAYOUT PLANS INCLUDING, BUT NOT LIMITED TO, PIPE SUPPORT BRACKETS, PIPE ALIGNMENT, PIPE LENGTHS, AND ALL NECESSARY FITTINGS, ELBOWS, WYES, ADAPTERS, GUIDES, RESTRAINTS, WEAR PADS, COUPLERS AND JOINTS SHALL BE DESIGNED AND SEALED BY A PROFESSIONAL ENGINEER LICENSED IN NORTH CAROLINA AND SUBMITTED FOR APPROVAL PRIOR TO ORDERING MATERIALS.

PIPE MANUFACTURER SHALL ENSURE THE PIPE AND THE PIPE SUPPORT BEARING AREA IS DESIGNED IN ACCORDANCE WITH THE HANGER SPACING PROVIDED IN THESE PLANS.

PIPE DESIGN MUST ALLOW VERTICAL FLEXURE FROM THE SUPERSTRUCTURE.

THE COLLECTOR PIPE SHALL CLOSELY FOLLOW THE LONGITUDINAL GRADE OF THE STRUCTURE WHILE MAINTAINING A MINIMUM OF 0.5% SLOPE AT ALL TIMES.

COUPLERS SHALL BE DESIGNED TO ACCOMMODATE A TURN AT EACH BENT IN ORDER TO FOLLOW THE HORIZONTAL AND VERTICAL CURVATURE OF THE BRIDGE OVERHANG.

THE PIPE MANUFACTURER SHALL ENSURE THE FRICTIONAL FORCE REQUIRED TO ACTIVATE THE EXPANSION COUPLERS DOES NOT OVERSTRESS THE COUPLER WALL BUILD-UP, DRAINAGE SYSTEM BRACKETS SUPPORTS OR LATERAL RESTRAINTS.

WASHERS SHALL BE ASTM F436 OR APPROVED EQUIVALENT.

BOLTS, NUTS, AND WASHERS SHALL BE GALVANIZED IN ACCORDANCE WITH THE STANDARD SPECIFICATIONS.

BOLT THREADS SHALL BE BURRED TO PREVENT LOOSENING.

PVC PIPE SHALL BE PAINTED TO MATCH THE FINAL SURFACE FINISH OF THE STRUCTURE WITH TWO COATS OF AN ACRYLIC OR LATEX PAINT THAT IS CHEMICALLY COMPATIBLE WITH PVC PRODUCTS AND MEETS THE REQUIREMENTS OF ARTICLE 1080-12 OF THE STANDARD SPECIFICATIONS. EACH COAT SHALL BE 2 DRY MILS THICK. DECK DRAINS SHALL BE ROUGHENED PRIOR TO PAINTING.

ALL METALLIC COMPONENTS IN THE DRAINAGE SYSTEM, EXCEPT STAINLESS STEEL AND MALLEABLE IRON PARTS, ARE REQUIRED TO BE HOT-DIPPED GALVANIZED PER NCDOT STANDARD SPECIFICATIONS. ELECTRO-PLATE COATING ON STEEL RODS, STEEL YOKE TYPE PIPE ROLLS, BRACKETS, OTHER STEEL HARDWARE IS CONSIDERED BY NCDOT AS TOO THIN FOR OUTDOOR APPLICATIONS.

ALL FRP AND PVC PIPE SHALL BE INSTALLED PER MANUFACTURER'S RECOMMENDATIONS.

ALL STRUCTURAL STEEL SHALL BE ASTM A36 OR APPROVED EQUAL UNLESS NOTED OTHERWISE.

THE GALVANIZED SURFACE SHALL BE CLEANED TO (SSPC SP-1) PRIOR TO COATING.

ALL FABRICATION SHALL CONFORM TO THE APPLICABLE SECTION OF THE NORTH CAROLINA DEPARTMENT OF TRANSPORTATION STANDARD SPECIFICATIONS FOR ROADS AND STRUCTURES.

ALL FRP SHALL BE PIGMENTED TO MATCH THE FINAL SURFACE FINISH OF THE STRUCTURE.

ALL FRP PIPE SIZES ARE SHOWN AS INSIDE DIAMETER SIZES.

FRP = FIBERGLASS REINFORCED PLASTIC

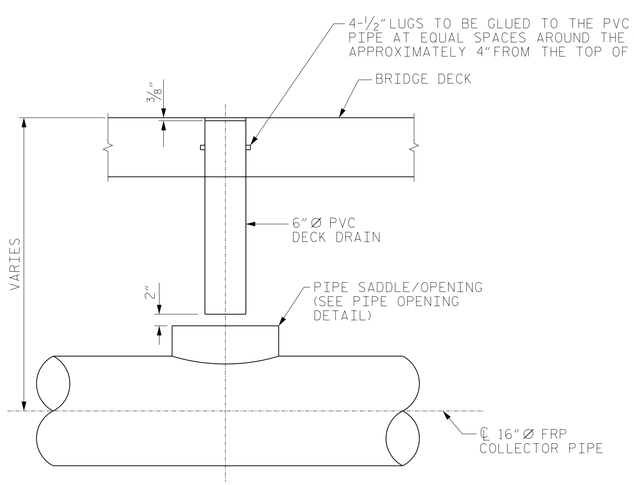

DRAIN OUTLET & PIPE CONNECTION

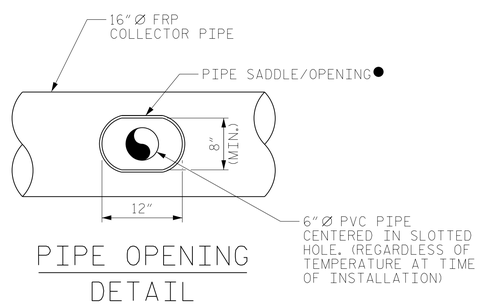

PIPE OPENING DETAIL

● FABRICATOR SHALL DETERMINE PIPE SADDLE/REINFORCEMENT FOR OPENING SIZE INDICATED. FABRICATOR SHALL SUBMIT SHOP DRAWINGS OF PIPE SADDLE/OPENING FOR REVIEW PRIOR TO BEGINNING FABRICATION.

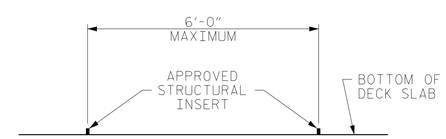

LOCATION OF INSERTS FOR HANGERS

EXACT SPACING MAY VARY SLIGHTLY TO ENSURE THAT INSERTS AVOID DECK DRAINS AND DRAINAGE ELEMENTS THAT PREVENT PROPER FIT UP OF HANGERS

PROJECT NO. R-2519B
YANCEY/MITCHELL COUNTY
STATION: 122+22.50 -L-

SHEET 3 OF 3

NORTH CAROLINA PROFESSIONAL SEAL 18442 ENGINEER RICHARD LEON BOLLINGER, JR.

Digitally signed by Richard L Bollinger
Date: 2014.08.26 15:00:19 -04'00'

RS&H IMPROVING YOUR WORLD

RS&H Architects-Engineers-Planners, Inc.
8601 Six Forks Road, Suite 260
Raleigh, NC 27615
919-846-6701 FAX 919-846-9080
www.rsandh.com
North Carolina License Nos. 50073 * F-0453 * C-28

STATE OF NORTH CAROLINA
DEPARTMENT OF TRANSPORTATION
RALEIGH

SUPERSTRUCTURE
STRUCTURE DRAINAGE SYSTEM DETAILS

LEFT LANE

REVISIONS						SHEET NO.
NO.	BY:	DATE:	NO.	BY:	DATE:	S-67
1			3			TOTAL SHEETS
2			4			194

DWG. No. 013

DRAWN BY :	JML	DATE :	07/2013
CHECKED BY :	JMR	DATE :	07/2013
DESIGN ENGINEER OF RECORD :	JMR	DATE :	07/2013