DocuSign Envelope ID: BF27B874-C54A-4DE8-B3F6-99270604783F

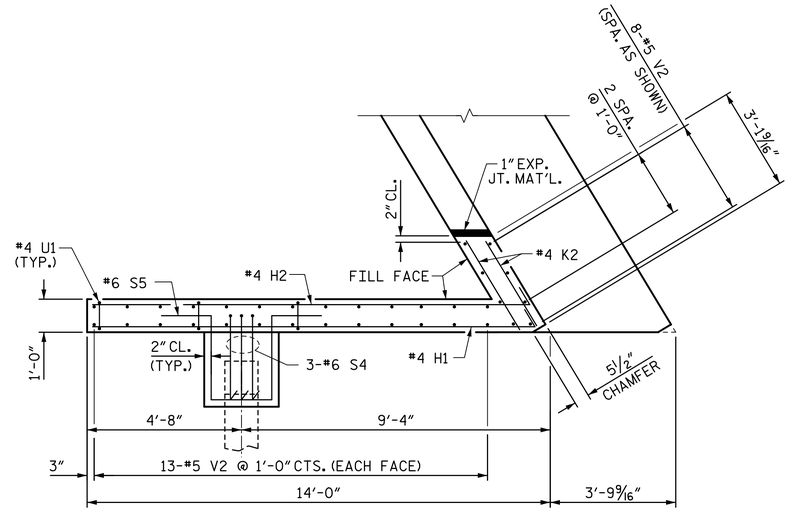

PLAN OF WING (W1)

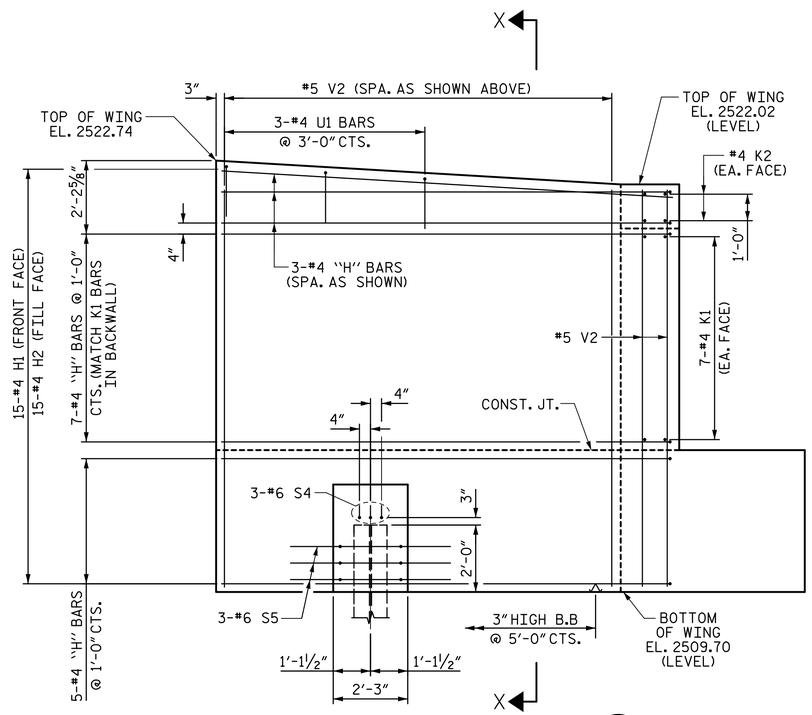

ELEVATION OF WING (W1)

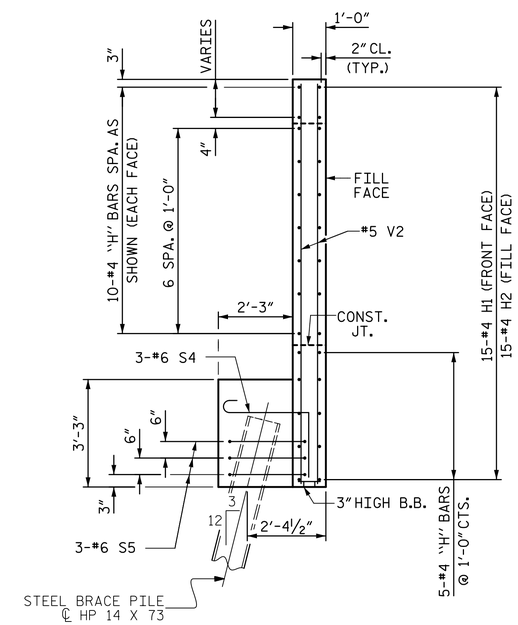

SECTION X-X

Prepared by
URS
URS Corporation – North Carolina
1600 Perimeter Park Drive, Suite 400
Morrisville, NC 27560
PHONE: 919 461-1100 FAX: 919 461-1415
NC LIC.# C-2243

PROJECT NO. R-2519B
YANCEY/MITCHELL COUNTY
STATION: 24+11.31 -L-

SHEET 2 OF 3

STATE OF NORTH CAROLINA
DEPARTMENT OF TRANSPORTATION
RALEIGH

SUBSTRUCTURE

END BENT 1

(RIGHT LANE)

8/21/2014
NORTH CAROLINA PROFESSIONAL SEAL 038447 ENGINEER ANDREW S. MILLER
DocuSigned by: Andrew S. Miller
D5D820D9405446D...

REVISIONS						SHEET NO.
NO.	BY:	DATE:	NO.	BY:	DATE:	S-46
1			3			TOTAL SHEETS
2			4			194

DRAWN BY : R. L. WHITCHER DATE : 3/8/13
CHECKED BY : K. H. COMPTON DATE : 3/21/13
DESIGNED BY : J.C. HALL DATE : 4/2/13

8/20/2014
P:\Jobs1\R2519B\Structures\Electronic Signed Plans\Str 2\402_037_S02_R2519B_EB1_02.dgn
kyle_compton

STR #2