DocuSign Envelope ID: BF27B874-C54A-4DE8-B3F6-99270604783F

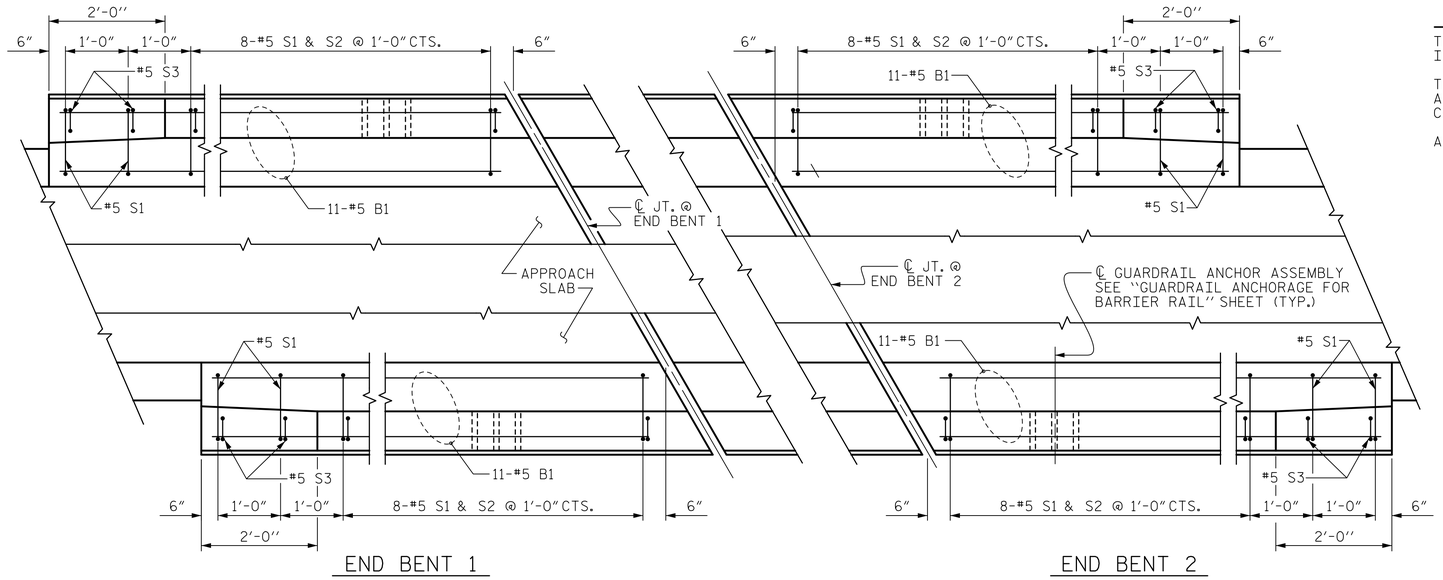

END BENT 1

END BENT 2

PLAN OF BARRIER RAIL

FOR EXPANSION JOINT SEAL, SEE "EXPANSION JOINT SEAL DETAILS" SHEET

NOTES

THE COST OF THE BARRIER RAIL ON THE APPROACH SLAB SHALL BE INCLUDED IN THE LINEAR FOOT CONTRACT PRICE BID FOR "CONCRETE BARRIER RAIL".

THE BARRIER RAIL ON EACH APPROACH SLAB SHALL NOT BE CAST UNTIL ALL APPROACH SLAB CONCRETE HAS BEEN CAST AND HAS REACHED A MINIMUM COMPRESSIVE STRENGTH OF 3,000 PSI.

ALL REINFORCING STEEL IN BARRIER RAILS SHALL BE EPOXY COATED.

BAR TYPES

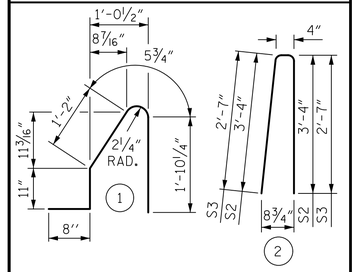

ALL BAR DIMENSIONS ARE OUT TO OUT

BILL OF MATERIAL

BARRIER RAIL ONLY

BAR	NO.	SIZE	TYPE	LENGTH	WEIGHT
* B1	44	5	STR.	9'-8"	444
* S1	40	5	1	5'-1"	212
* S2	32	5	2	7'-0"	234
* S3	8	5	2	5'-6"	46
* EPOXY COATED REINFORCING STEEL					936 LBS.
CLASS AA CONCRETE					5.6 C. Y.
CONCRETE BARRIER RAIL					41.81 LIN. FT.

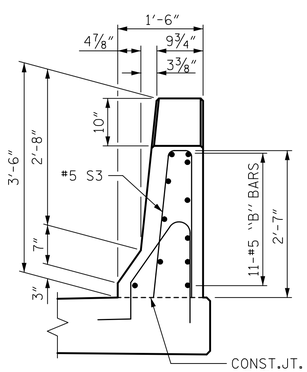

END VIEW

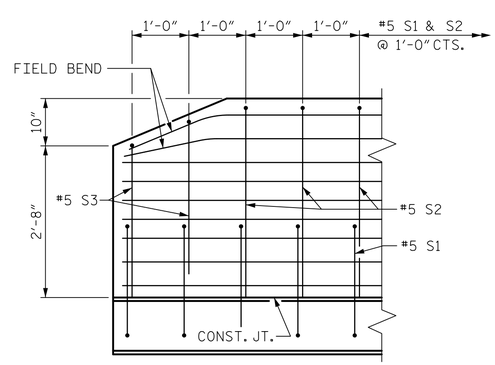

SIDE VIEW

END OF RAIL DETAILS

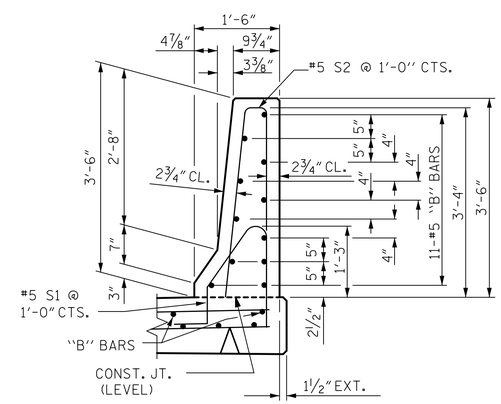

SECTION THRU RAIL

PROJECT NO. R-2519B

YANCEY/MITCHELL COUNTY

STATION: 24+11.31 -L-

SHEET 3 OF 3

STATE OF NORTH CAROLINA
DEPARTMENT OF TRANSPORTATION
RALEIGH

STANDARD

BRIDGE APPROACH SLAB DETAILS

(RIGHT LANE)

Prepared by
URS
URS Corporation - North Carolina
1600 Perimeter Park Drive, Suite 400
Morrisville, NC 27560
PHONE: 919 461-1100 FAX: 919 461-1415
NC LIC. # C-2243

8/21/2014
NORTH CAROLINA PROFESSIONAL SEAL 038447 ENGINEER ANDREW S. MILLER
DocuSigned by: Andrew S. Miller
D5DB20D94054468D...

REVISIONS						SHEET NO.
NO.	BY:	DATE:	NO.	BY:	DATE:	S-54
1			3			TOTAL SHEETS
2			4			194

ASSEMBLED BY : R.L. WHITCHER		DATE : 12/28/12	
CHECKED BY : K.H. COMPTON		DATE : 3/27/13	
DESIGNED BY : R.L. WHITCHER		DATE : 12/28/13	
DRAWN BY : FCJ	11/88	REV. 10/1/11	MAA/GM
CHECKED BY : ARB	11/88	REV. 7/12	MAA/GM
		REV. 10/12	MAA/GM

8/20/2014
P:\Jobs1\R2519B\Structures\Electronic Signed Plans\Str 2\402_053_S02_R2519B_AS_03.dgn
kyle_compton

STD. NO. BAS4

STR. #2