DocuSign Envelope ID: BF27B874-C54A-4DE8-B3F6-99270604783F

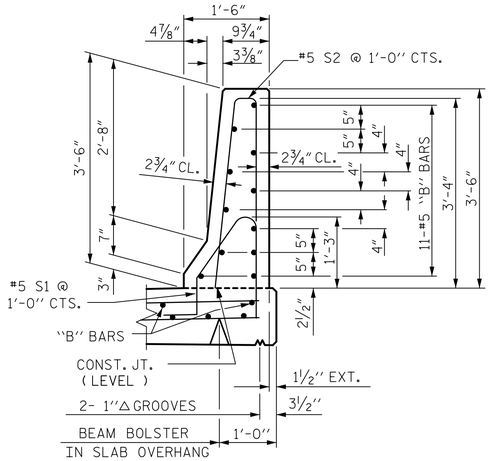

SECTION THRU RAIL

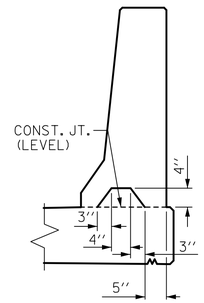

SECTION S-S

AT DAM IN OPEN JOINT
(THIS IS TO BE USED ONLY
WHEN SLIP FORM IS USED)

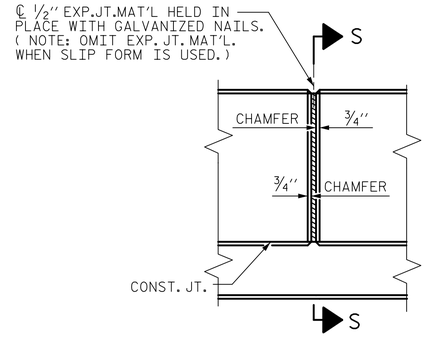

ELEVATION AT
EXPANSION JOINTS

BARRIER RAIL DETAILS

NOTES

THE BARRIER RAIL IN THE SPAN SHALL NOT BE CAST UNTIL ALL SLAB CONCRETE IN THE SPAN HAS BEEN CAST AND HAS REACHED A MINIMUM COMPRESSIVE STRENGTH OF 3,000 PSI.

THE JOINT IN THE DECK SHALL BE FORMED PRIOR TO THE CASTING OF BARRIER RAIL.

ALL REINFORCING STEEL IN BARRIER RAILS SHALL BE EPOXY COATED.

GROOVED CONTRACTION JOINTS, 1/2" IN DEPTH, SHALL BE TOOLED IN ALL EXPOSED FACES OF THE BARRIER RAIL AND IN ACCORDANCE WITH ARTICLE 825-10(B) OF THE STANDARD SPECIFICATIONS. THE CONTRACTION JOINT SHALL BE LOCATED AT EACH THIRD POINT BETWEEN BARRIER RAIL EXPANSION JOINTS. ONLY ONE CONTRACTION JOINT IS REQUIRED AT MIDPOINT OF BARRIER RAIL SEGMENTS LESS THAN 20 FEET IN LENGTH AND NO CONTRACTION JOINTS ARE REQUIRED FOR THOSE SEGMENTS LESS THAN 10 FEET IN LENGTH.

THE #5 S1 AND #5 S2 BARS MAY BE ADJUSTED SLIGHTLY IN ORDER TO MAINTAIN A 2" MINIMUM CLEARANCE TO THE 1/2" EXPANSION JOINT MATERIAL.

FOR EPOXY COATED REINFORCING STEEL AND CLASS AA CONCRETE IN THE BARRIER RAIL ON THE APPROACH SLABS, SEE "BRIDGE APPROACH SLAB DETAILS" SHEET.

FOR BARRIER RAIL DETAILS ON APPROACH SLAB, SEE "BRIDGE APPROACH SLAB DETAILS" SHEET, 3 OF 3.

BAR TYPES

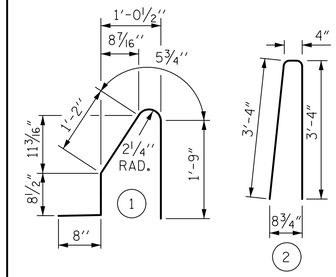

ALL BAR DIMENSIONS ARE OUT TO OUT

BILL OF MATERIAL

FOR CONCRETE BARRIER RAIL ONLY

BAR	NO.	SIZE	TYPE	LENGTH	WEIGHT
* B1	66	#5	STR	24'-7"	1692
* B2	88	#5	STR	15'-7"	1430
* S1	260	#5	1	4'-10"	1311
* S2	260	#5	2	7'-0"	1898

* EPOXY COATED REINFORCING STEEL	6331	LBS.
CLASS AA CONCRETE	35.6	CU. YDS.
CONCRETE BARRIER RAIL		
DECK	262.10	LIN. FT.
APPROACH SLABS	41.81	LIN. FT.
TOTAL	303.91	LIN. FT.

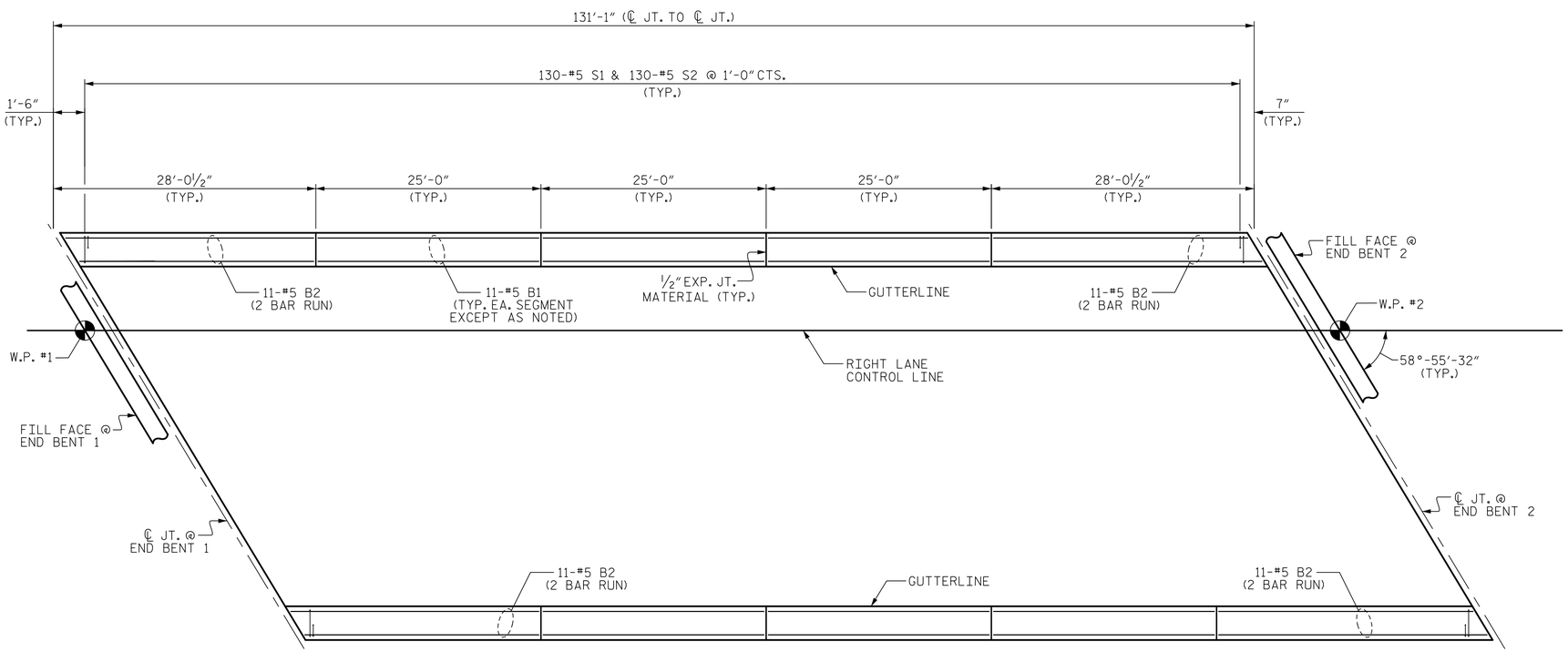

PLAN OF BARRIER RAIL

MEASUREMENTS TAKEN ALONG BACK FACE
OF BARRIER RAIL

PROJECT NO. R-2519B
YANCEY/MITCHELL COUNTY
STATION: 24+11.31 -L-

SHEET 1 OF 2

STATE OF NORTH CAROLINA
DEPARTMENT OF TRANSPORTATION
RALEIGH

STANDARD

CONCRETE
BARRIER RAIL

(RIGHT LANE)

Prepared by
URS
URS Corporation - North Carolina
1600 Perimeter Park Drive, Suite 400
Morrisville, NC 27560
PHONE: (919) 461-1100 FAX: (919) 461-1415
NC LIC.# C-2243

8/21/2014
NORTH CAROLINA PROFESSIONAL SEAL 038447 ENGINEER ANDREW S. MILLER
DocuSigned by: Andrew S. Miller
D5DB20D9405446D...

REVISIONS						SHEET NO.
NO.	BY:	DATE:	NO.	BY:	DATE:	S-40
1			3			TOTAL SHEETS
2			4			194

ASSEMBLED BY : R.L. WHITCHER		DATE : 12/28/12	
CHECKED BY : K.H. COMPTON		DATE : 3/28/13	
DESIGNED BY : R.L. WHITCHER		DATE : 12/28/13	
DRAWN BY : ARB 5/87	REV. 5/7/03R	RWW/JTE	
CHECKED BY : SJD 9/87	REV. 5/1/06R	TLA/GM	
	REV. 10/1/11	MAA/GM	

8/20/2014
P:\Jobs1\R2519B\Structures\Electronic Signed Plans\Str 2\402_025_S02_R2519B_CBR_01.dgn
kyle_compton

STD. NO. CBR1 STR. #2