DocuSign Envelope ID: BF27B874-C54A-4DE8-B3F6-99270604783F

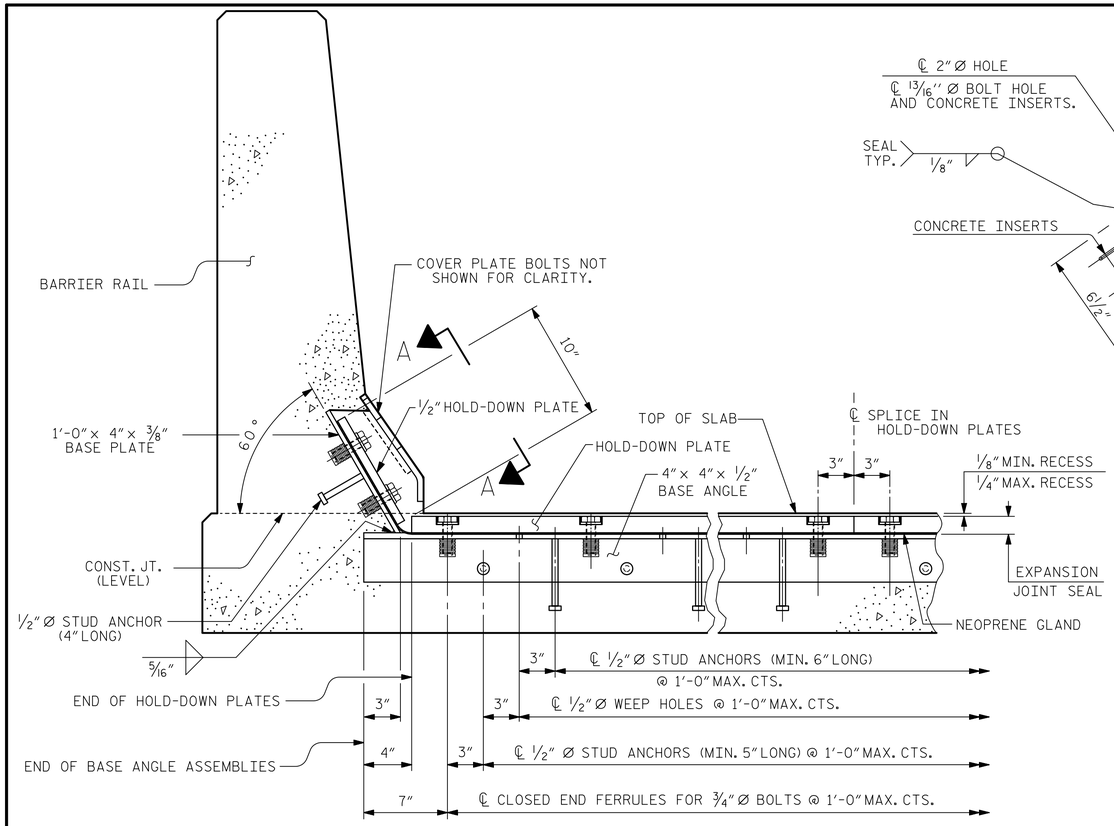

SECTION THRU RAIL NORMAL TO JOINT

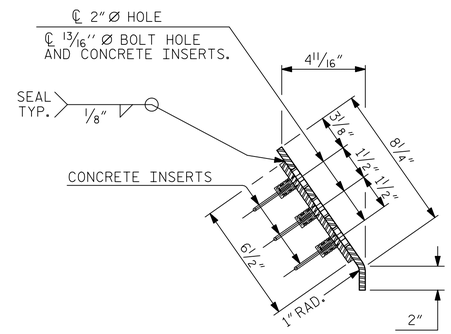

END VIEW

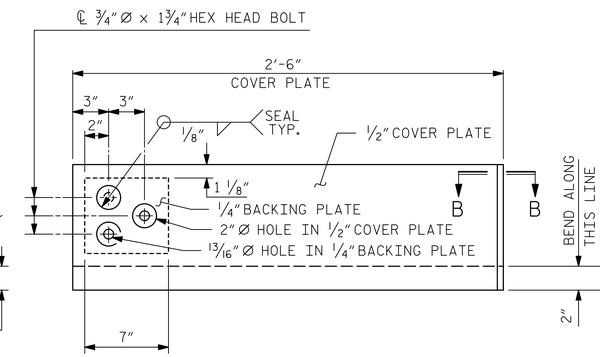

TYPE I - ELEVATION VIEW

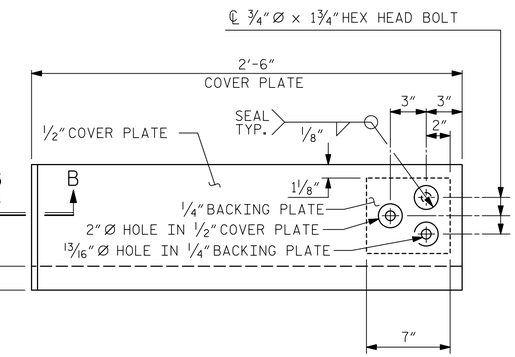

TYPE II - ELEVATION VIEW

COVER PLATE DETAILS

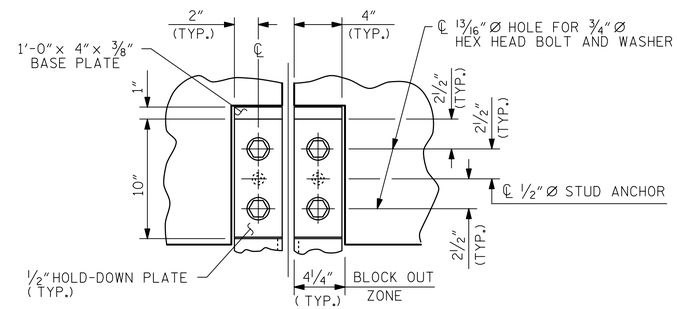

SECTION A - A

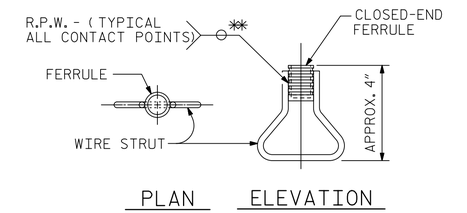

CONCRETE INSERT

** EACH WELDED ATTACHMENT OF WIRE TO FERRULE SHALL DEVELOP THE TENSILE STRENGTH OF THE WIRE.

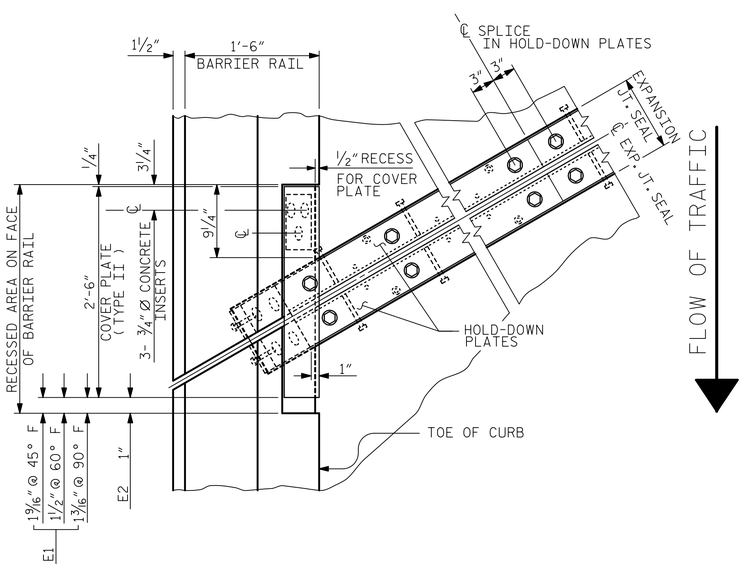

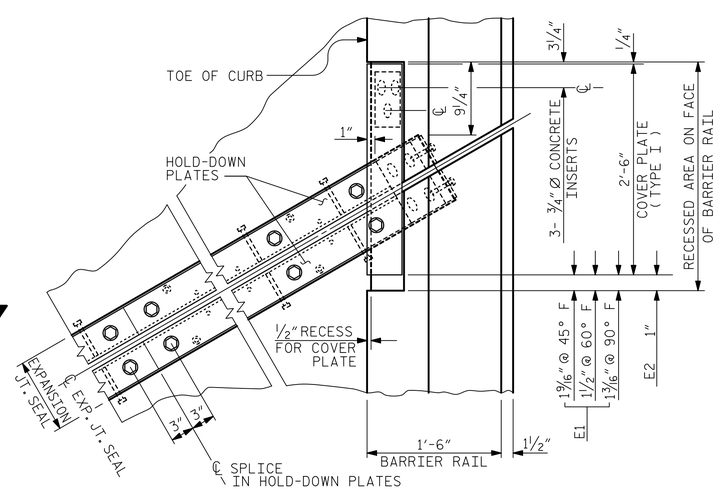

PLAN OF EXPANSION JOINT SEAL

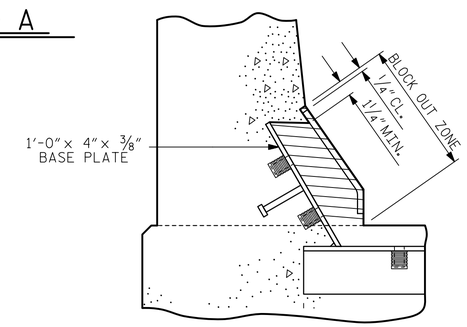

BLOCK OUT DETAIL

SEE " SECTION A - A " FOR OTHER DETAILS.

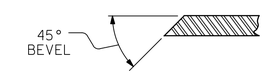

SECTION B - B

PROJECT NO. R-2519B
YANCEY/MITCHELL COUNTY
STATION: 24+11.31 -L-

SHEET 2 OF 2

ASSEMBLED BY : K. H. COMPTON	DATE : 11/21/12
CHECKED BY : R.L. WHITCHER	DATE : 11/28/12
DESIGNED BY : K.H. COMPTON	DATE : 11/1/12

DRAWN BY : REK 9/87	REV. 10/1/11	MAA/GM
CHECKED BY : CRK 10/87	REV. 7/12	MAA/GM
	REV. 10/12	MAA/GM

Prepared by
URS
URS Corporation - North Carolina
1600 Perimeter Park Drive, Suite 400
Morrisville, NC 27560
PHONE: (919) 461-1100 FAX: (919) 461-1415
NC LIC.# C-2243

8/21/2014
NORTH CAROLINA PROFESSIONAL SEAL 038447 ENGINEER ANDREW S. MILLER

DocuSigned by:
Andrew S. Miller
D5D820D94054460...

STATE OF NORTH CAROLINA
DEPARTMENT OF TRANSPORTATION
RALEIGH

STANDARD

EXPANSION JOINT SEAL DETAILS FOR BARRIER RAIL
(LEFT LANE)

REVISIONS						SHEET NO.
NO.	BY:	DATE:	NO.	BY:	DATE:	S-16
1			3			TOTAL SHEETS
2			4			194

STD. NO. EJS2 STR. #1

8/20/2014
P:\Jobs1\R2519B\Structures\Electronic Signed Plans\Str 1\401_031_S01_R2519B_JS_02.dgn
kyle_compton