DocuSign Envelope ID: BF27B874-C54A-4DE8-B3F6-99270604783F

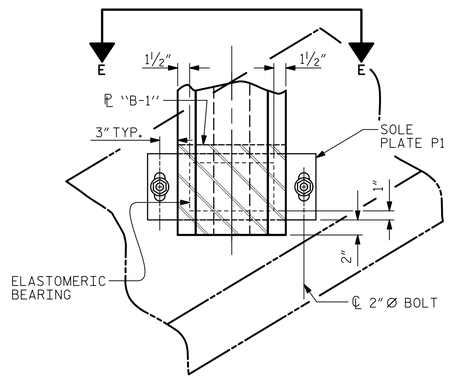

AT END BENT 1

(EXPANSION)

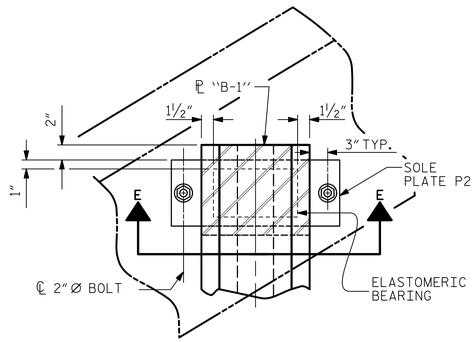

AT END BENT 2

(FIXED)

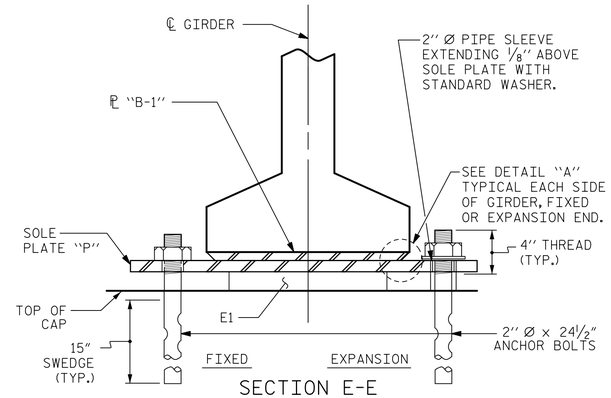

SECTION E-E

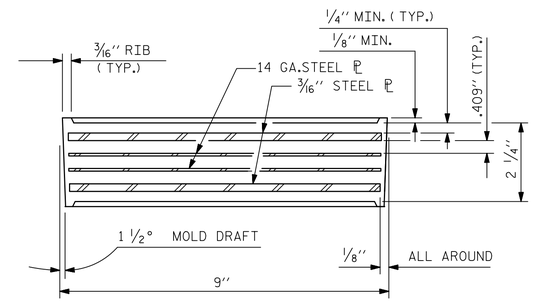

TYPICAL SECTION OF ELASTOMERIC BEARINGS

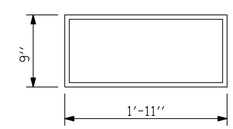

E1 (10 REQ'D)

PLAN VIEW OF ELASTOMERIC BEARING

TYPE V

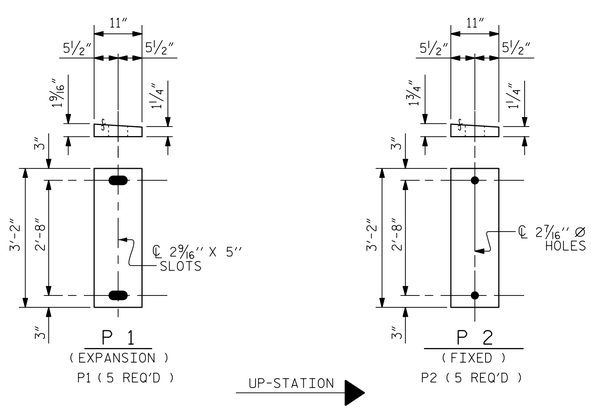

SOLE PLATE DETAILS ("P")

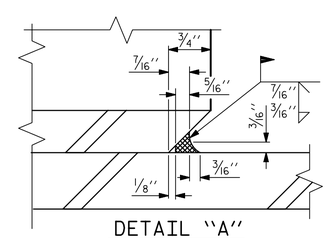

DETAIL "A"

NOTES

AT ALL FIXED POINTS OF SUPPORT, NUTS FOR ANCHOR BOLTS ARE TO BE TIGHTENED FINGER TIGHT AND THEN BACKED OFF ½ TURN. THE THREAD OF THE NUT AND BOLT SHALL THEN BE BURRED WITH A SHARP POINTED TOOL.

THE 2" Ø PIPE SLEEVE SHALL BE CUT FROM SCHEDULE 40 PVC PLASTIC PIPE. THE PVC PLASTIC PIPE SHALL MEET THE REQUIREMENTS OF ASTM D1785.

STEEL SOLE PLATES, ANCHOR BOLTS, NUTS, AND WASHERS SHALL BE GALVANIZED IN ACCORDANCE WITH THE STANDARD SPECIFICATIONS.

PRIOR TO WELDING, GRIND THE GALVANIZED SURFACE OF THE PORTION OF THE EMBEDDED PLATE AND SOLE PLATE THAT ARE TO BE WELDED. AFTER WELDING, DAMAGED GALVANIZED SURFACES SHALL BE REPAIRED IN ACCORDANCE WITH THE STANDARD SPECIFICATIONS.

WHEN WELDING THE SOLE PLATE TO THE EMBEDDED PLATE IN THE GIRDER, USE TEMPERATURE INDICATING WAX PENS, OR OTHER SUITABLE MEANS, TO ENSURE THAT THE TEMPERATURE OF THE SOLE PLATE DOES NOT EXCEED 300°F. TEMPERATURES ABOVE THIS MAY DAMAGE THE ELASTOMER.

SOLE PLATE "P", BOLTS, NUTS, WASHERS, AND PIPE SLEEVE SHALL BE INCLUDED IN THE PAY ITEM FOR PRESTRESSED CONCRETE GIRDERS.

ANCHOR BOLTS SHALL MEET THE REQUIREMENTS OF ASTM A449. NUTS SHALL MEET THE REQUIREMENTS OF AASHTO M291-DH OR AASHTO M292-2H. WASHERS SHALL MEET THE REQUIREMENTS OF AASHTO M293. SHOP DRAWINGS ARE NOT REQUIRED FOR ANCHOR BOLT, NUTS AND WASHERS. SHOP INSPECTION IS REQUIRED.

ALL SURFACES OF BEARING PLATES SHALL BE SMOOTH AND STRAIGHT.

THE ELASTOMER IN THE STEEL REINFORCED BEARINGS SHALL HAVE A SHEAR MODULUS OF 0.160 KSI, IN ACCORDANCE WITH AASHTO M251.

FOR STEEL REINFORCED ELASTOMERIC BEARINGS, SEE SPECIAL PROVISIONS.

— LOAD RATINGS —	
	MAX.D.L.+ L.L.
TYPE V	350 K

PROJECT NO. R-2519B

YANCEY/MITCHELL COUNTY

STATION: 24+11.31 -L-

STATE OF NORTH CAROLINA
DEPARTMENT OF TRANSPORTATION
RALEIGH

STANDARD
ELASTOMERIC BEARING DETAILS
PRESTRESSED CONCRETE GIRDER SUPERSTRUCTURE
(LEFT LANE)

REVISIONS						SHEET NO.
NO.	BY:	DATE:	NO.	BY:	DATE:	S-11
1			3			TOTAL SHEETS
2			4			194

STD. NO. EB4 STR. #1

Prepared by
URS
URS Corporation - North Carolina
1600 Perimeter Park Drive, Suite 400
Morrisville, NC 27560
PHONE: 919 461-1100 FAX: 919 461-1415
NC LIC.# C-2243

8/21/2014
NORTH CAROLINA PROFESSIONAL SEAL 038447 ENGINEER ANDREW S. MILLER

DocuSigned by:
Andrew S. Miller
D50B20D9405446D...

ASSEMBLED BY : R.L. WHITCHER		DATE : 11/8/12	
CHECKED BY : K.H. COMPTON		DATE : 11/30/12	
DESIGNED BY : R.L. WHITCHER		DATE : 11/8/12	
DRAWN BY : WJH 8/89	REV. 7/10/01	RWW/LES	
CHECKED BY : CRK 8/89	REV. 5/1/06	TLA/GM	
	REV. 10/1/11	MAA/GM	

8/20/2014
P:\Jobs1\R2519B\Structures\Electronic Signed Plans\Str 1\401_021_S01_R2519B_BG.dgn
kyle_compton