DocuSign Envelope ID: DC20F590-6DCC-41B5-94DF-82EAE8E8A277

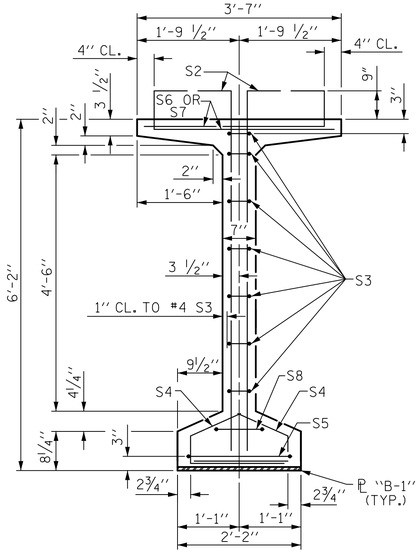

SECTION B-B

FOR EMBEDDED ℙ "B-1" DETAILS SEE SHEET 2 OF 2

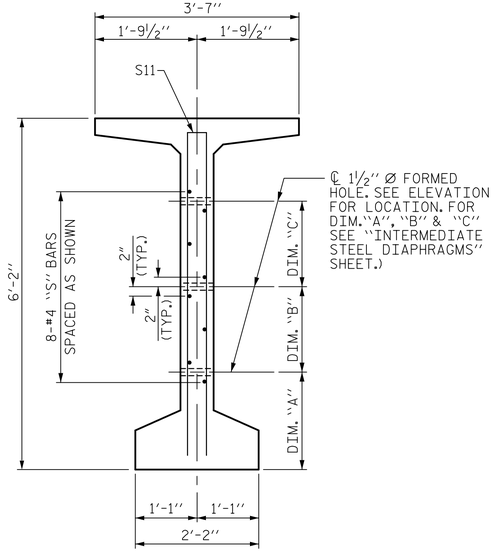

SECTION C-C

(S1, S6 AND S9 BARS NOT SHOWN)

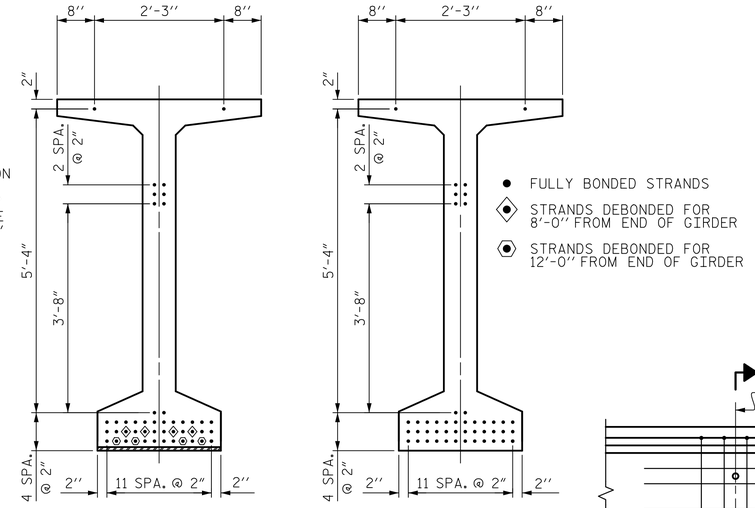

0.6" Ø LOW RELAXATION STRAND LAYOUT

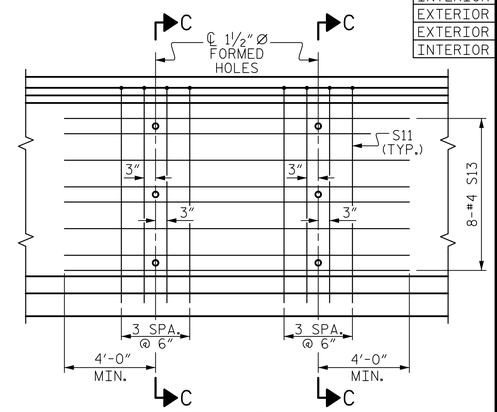

PARTIAL ELEVATION

SHOWING INTERMEDIATE STEEL DIAPHRAGM REINFORCING STEEL FOR GIRDER Nos. 2-4 (FOR INTERIOR GDRS. WITH SKEW < 70°)

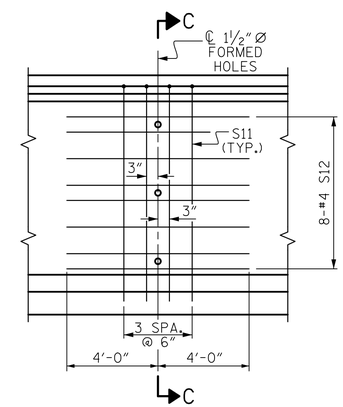

PARTIAL ELEVATION

SHOWING INTERMEDIATE STEEL DIAPHRAGM REINFORCING STEEL FOR GIRDER Nos. 1 & 5 (FOR ALL EXTERIOR GIRDERS AND INTERIOR GIRDERS WITH 70° < SKEW < 110°)

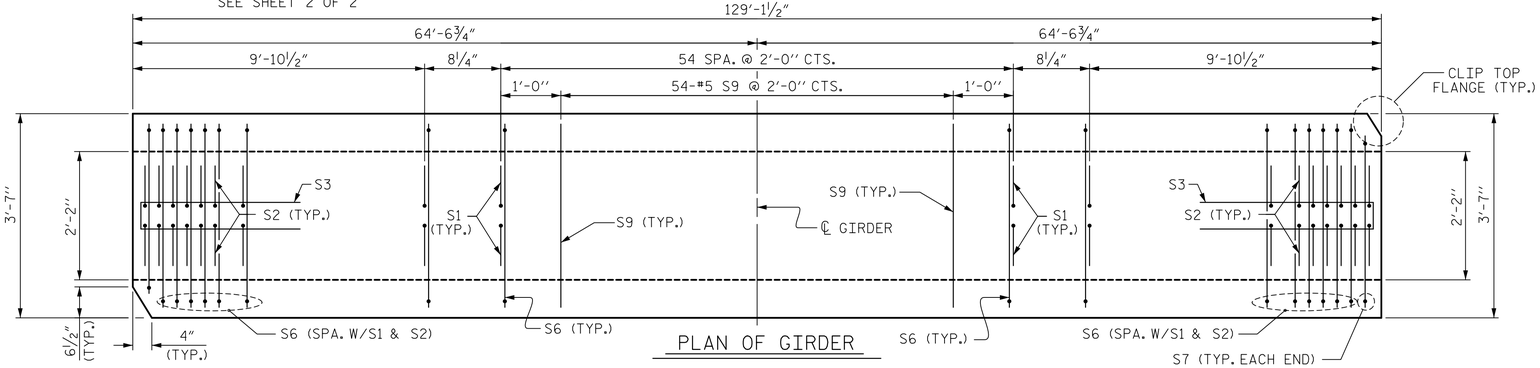

PLAN OF GIRDER

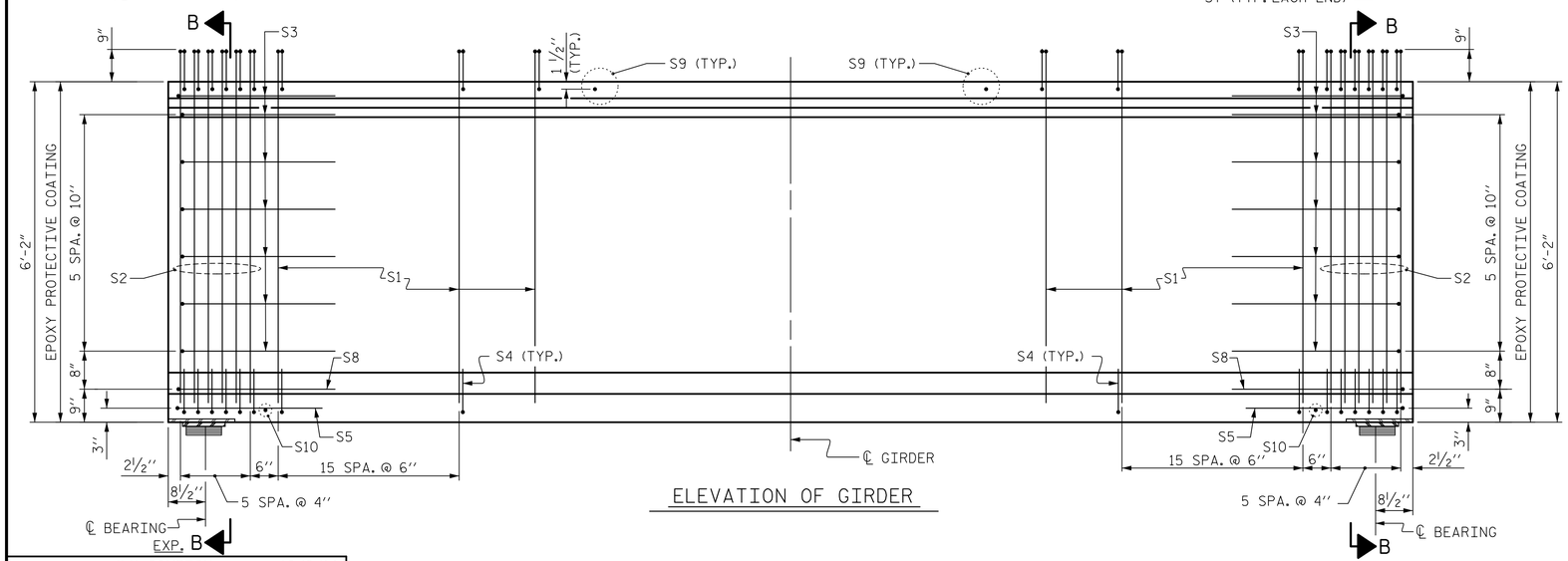

ELEVATION OF GIRDER

0.6" Ø L. R. GRADE 270 STRANDS

AREA (SQUARE INCHES)	ULTIMATE STRENGTH (LBS. PER STRAND)	APPLIED PRESTRESS (LBS. PER STRAND)
0.217	58,600	43,950

REINFORCING STEEL FOR ONE GDR

	BAR	NUMBER	SIZE	TYPE	LENGTH	WEIGHT
	S1	174	#4	1	7'-3"	843
	S2	24	#5	1	7'-3"	181
	S3	14	#4	2	8'-5"	79
	S4	88	#4	3	3'-2"	186
	S5	2	#5	2	9'-10"	21
	S6	194	#5	4	4'-7"	927
	S7	4	#5	4	4'-3"	18
	S8	2	#5	2	9'-0"	19
	S9	54	#5	STR	3'-3"	183
	S10	2	#3	STR	1'-10"	1
INTERIOR	S11	16	#5	2	12'-0"	200
EXTERIOR	S11	8	#5	2	12'-0"	100
EXTERIOR	S12	16	#4	STR	8'-0"	86
INTERIOR	S13	16	#4	STR	13'-1"	140

BAR TYPES

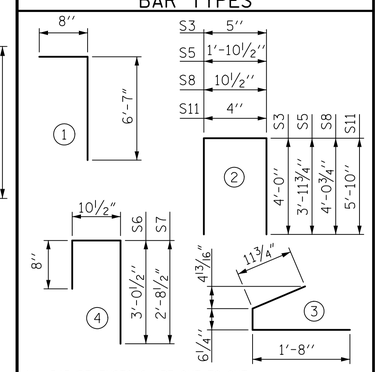

ALL BAR DIMENSIONS ARE OUT-TO-OUT

QUANTITIES FOR ONE GIRDER

SPAN A	REINFORCING STEEL	8500 PSI CONCRETE	0.6" Ø L.R. STRANDS
	LB.	C.Y.	No.
INT. GIRDER	2798	29.40	46
EXT. GIRDER	2644	29.40	46

GIRDERS REQUIRED

NUMBER	LENGTH	TOTAL LENGTH
5	129'-1 1/2"	645.63'

PROJECT NO. R-2519B

YANCEY/MITCHELL COUNTY

STATION: 24+11.31 -L-

SHEET 1 OF 2

STATE OF NORTH CAROLINA
DEPARTMENT OF TRANSPORTATION
RALEIGH

74" PRESTRESSED CONCRETE MODIFIED BULB TEE

(LEFT LANE)

REVISIONS							SHEET NO.
NO.	BY:	DATE:	NO.	BY:	DATE:		S-8
1			3				TOTAL SHEETS
2			4				194

DRAWN BY :	K.H. COMPTON	DATE :	10/9/14
CHECKED BY :	M.K. TOM	DATE :	10/9/14
DESIGNED BY :	J.C. HALL	DATE :	10/17/12

Prepared by
URS
URS Corporation - North Carolina
1600 Perimeter Park Drive, Suite 400
Morrisville, NC 27560
PHONE: (919) 461-1100 FAX: (919) 461-1415
NC LIC.# C-2243

10/13/2014

NORTH CAROLINA PROFESSIONAL SEAL 038447 ENGINEER ANDREW S. MILLER

DocuSigned by: Andrew S. Miller
D5D62DD9405446D...

10/13/2014
P:\Jobs\R2519B\Structures\Electronic Signed Plans\Str 1\401_015_S01_R2519B_PCG_01.dgn
kyle_compton

STR #1