DocuSign Envelope ID: BF27B874-C54A-4DE8-B3F6-99270604783F

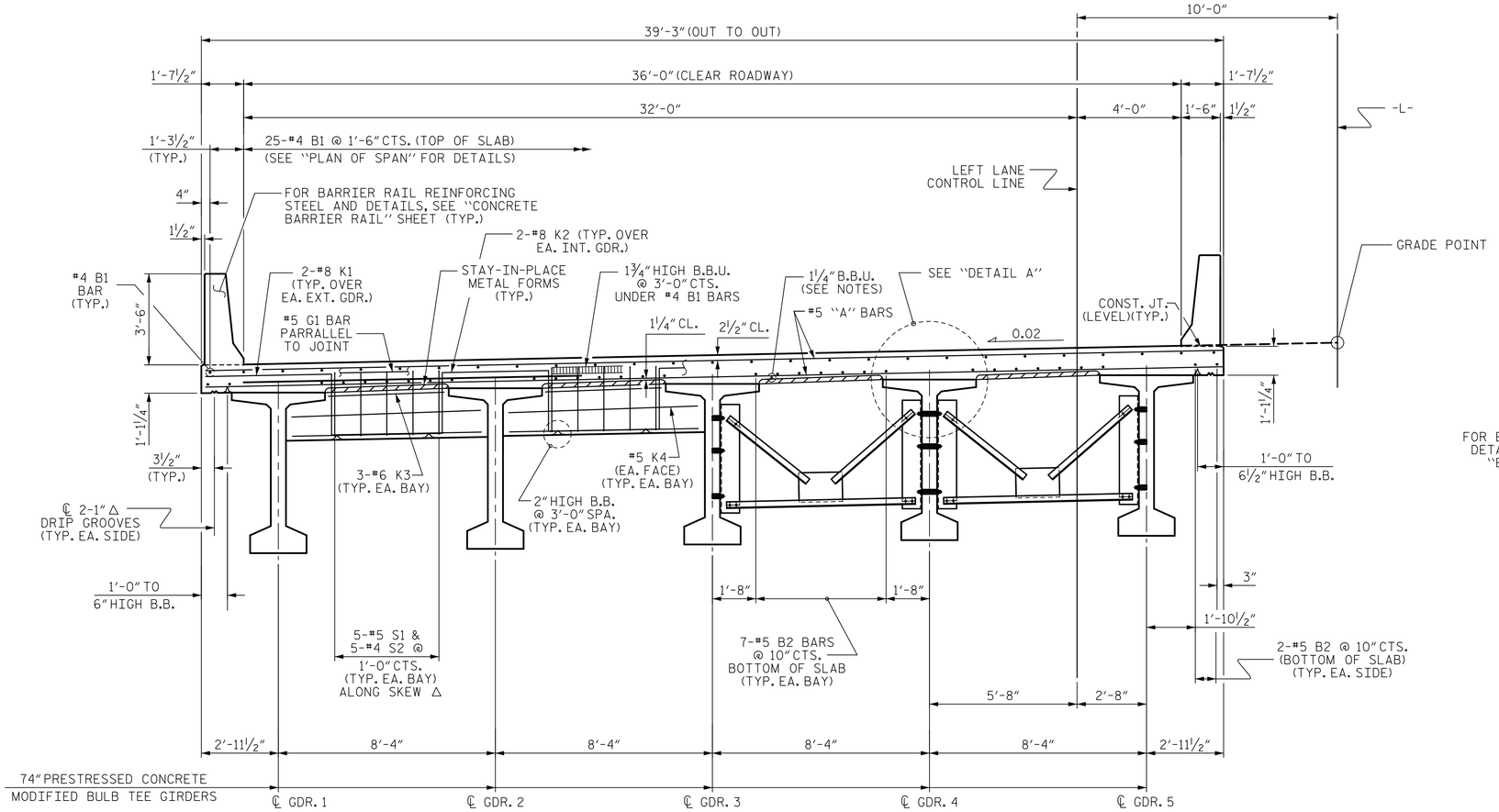

SECTION AT END BENT DIAPHRAGM

SECTION AT INTERMEDIATE DIAPHRAGM

TYPICAL SECTION

Δ SEE PLAN OF SPANS

NOTES :

PROVIDE 1¼" HIGH BEAM BOLSTERS UPPER AT 4'-0" CTS. ATOP THE METAL STAY-IN-PLACE FORMS TO SUPPORT THE BOTTOM MAT OF "A" BARS. WHEN USING REMOVABLE FORMS, PROVIDE CONTINUOUS HIGH CHAIRS FOR METAL DECK (C.H.C.M.) @ 4'-0" CTS. WITH A HEIGHT TO SUPPORT THE BOTTOM MAT OF "A" BARS A CLEAR DISTANCE OF 2½" ABOVE THE TOP OF THE REMOVABLE FORM.

LONGITUDINAL STEEL MAY BE SHIFTED SLIGHTLY, AS NECESSARY, TO AVOID INTERFERENCE WITH STIRRUPS IN PRESTRESSED CONCRETE GIRDERS.

PREVIOUSLY CAST CONCRETE IN THE SPAN SHALL HAVE ATTAINED A MINIMUM COMPRESSIVE STRENGTH OF 3,000 PSI BEFORE ADDITIONAL CONCRETE IS CAST IN THE SPAN.

FOR INTERMEDIATE DIAPHRAGM DETAILS, SEE "INTERMEDIATE STEEL DIAPHRAGMS FOR 74" PRESTRESSED CONCRETE MODIFIED BULB TEE" SHEET.

BARRIER RAIL IN THE SPAN SHALL NOT BE CAST UNTIL ALL SLAB CONCRETE IN THE SPAN HAS BEEN CAST AND HAS REACHED A MINIMUM COMPRESSIVE STRENGTH OF 3,000 PSI.

THE JOINT IN THE DECK SHALL BE FORMED PRIOR TO CASTING OF THE BARRIER RAIL.

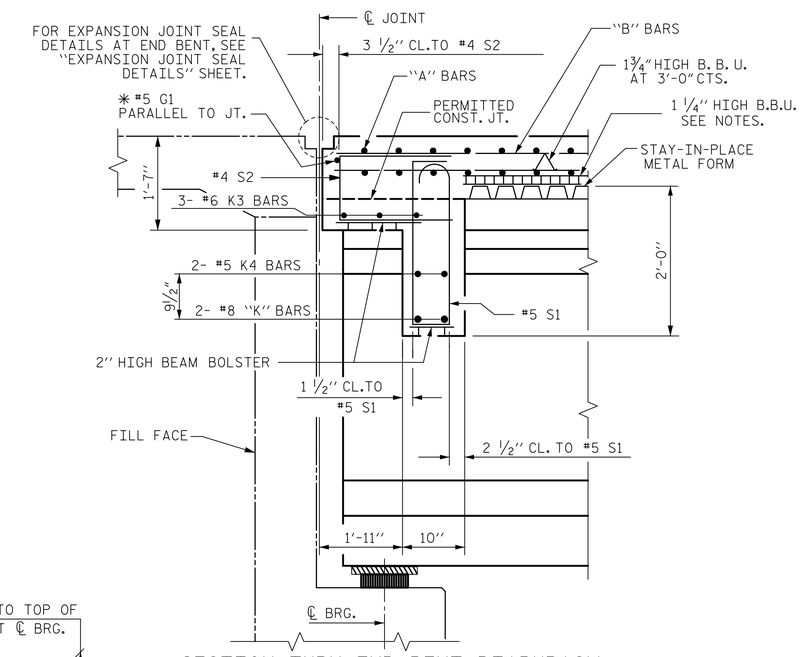

SECTION THRU END BENT DIAPHRAGM

✳ #5 G1 BAR MAY BE SHIFTED SLIGHTLY, AS NECESSARY, TO CLEAR REINFORCING STEEL AND STIRRUPS.

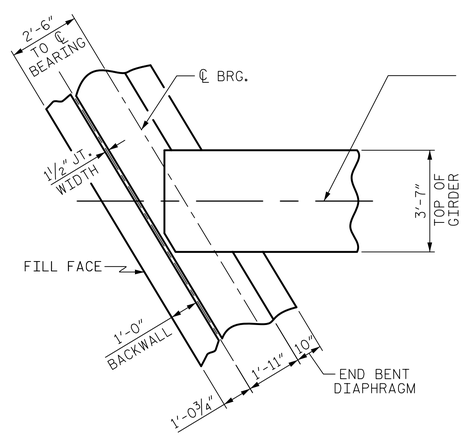

END BENT 1 DIAPHRAGM

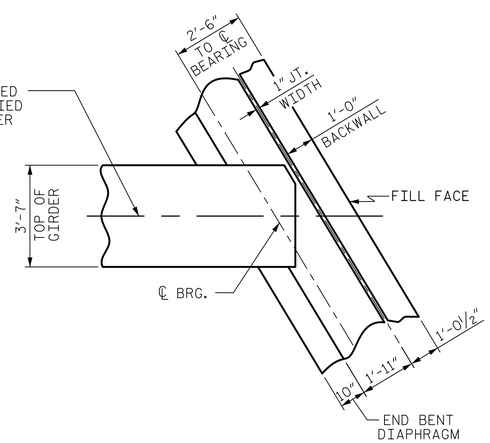

END BENT 2 DIAPHRAGM

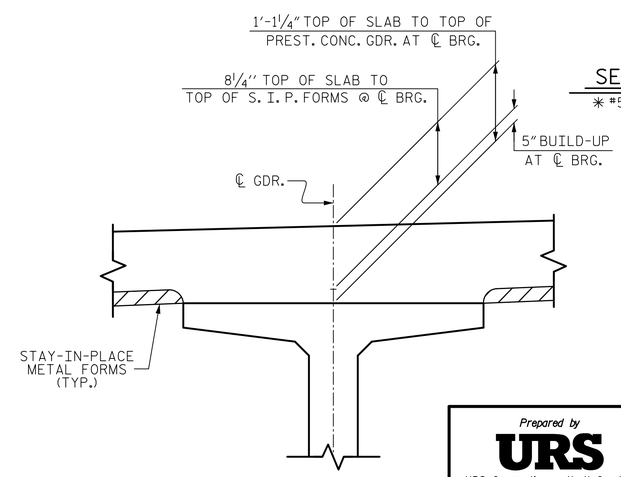

DETAIL A

PROJECT NO. R-2519B

YANCEY/MITCHELL COUNTY

STATION: 24+11.31 -L-

Prepared by URS

URS Corporation - North Carolina
1600 Perimeter Park Drive, Suite 400
Morrisville, NC 27560
PHONE: 919) 461-1100 FAX: (919) 461-1415
NC LIC.# C-3243

8/21/2014

NORTH CAROLINA PROFESSIONAL SEAL 038447 ENGINEER ANDREW S. MILLER

DocuSigned by: Andrew S. Miller
D5DB2009405446D...

STATE OF NORTH CAROLINA
DEPARTMENT OF TRANSPORTATION
RALEIGH

SUPERSTRUCTURE

TYPICAL SECTION

(LEFT LANE)

REVISIONS						SHEET NO.
NO.	BY:	DATE:	NO.	BY:	DATE:	S-5
1			3			TOTAL SHEETS
2			4			194

DRAWN BY : K.H. COMPTON DATE : 10/29/12
CHECKED BY : R.L. WHITCHER DATE : 11/15/12
DESIGNED BY : J.C. HALL DATE : 11/7/12

8/20/2014
P:\Jobs1\R2519B\Structures\Electronic Signed Plans\Str 1\401_009_S01_R2519B_TS.dgn
Kyle_compton