DocuSign Envelope ID: BF27B874-C54A-4DE8-B3F6-99270604783F

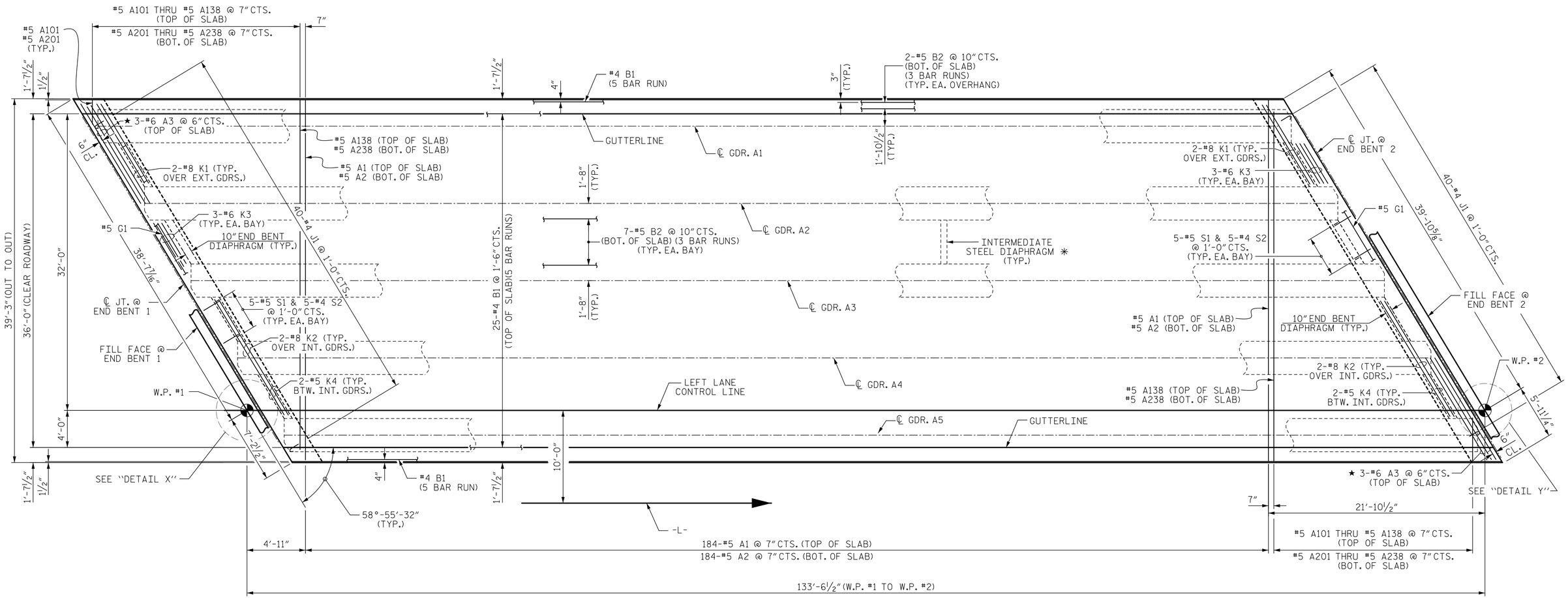

PLAN OF SPAN A

FOR POUR SEQUENCE AND LOCATION OF CONSTRUCTION JOINTS, SEE "SUPERSTRUCTURE BILL OF MATERIALS" SHEET.

✳ OTHER STEEL DIAPHRAGMS NOT SHOWN FOR CLARITY SEE FRAMING PLAN FOR NUMBER AND LOCATION OF INTERMEDIATE STEEL DIAPHRAGMS.

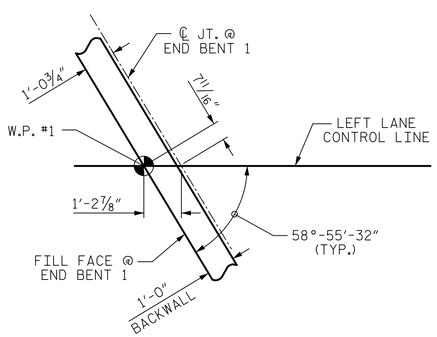

DETAIL X

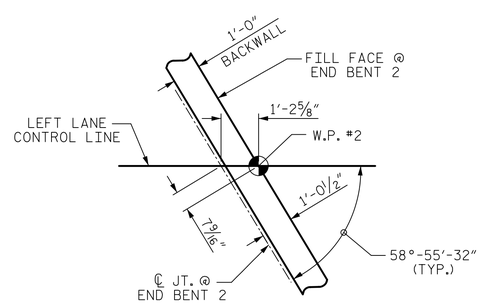

DETAIL Y

★ #6 A3 BARS ARE POSITIONED ONLY AT THE ACUTE CORNERS OF DECK SLAB. PLACE BARS UNDER TOP "B" BARS.

PROJECT NO. R-2519B
YANCEY/MITCHELL COUNTY
STATION: 24+11.31 -L-

STATE OF NORTH CAROLINA
DEPARTMENT OF TRANSPORTATION
RALEIGH

SUPERSTRUCTURE

PLAN OF SPAN
(LEFT LANE)

Prepared by
URS
URS Corporation – North Carolina
1600 Perimeter Park Drive, Suite 400
Morrisville, NC 27560
PHONE: (919) 461-1100 FAX: (919) 461-1415
NC LIC.# C-2243

8/21/2014
NORTH CAROLINA PROFESSIONAL SEAL 038447 ENGINEER ANDREW S. MILLER
DocuSigned by: Andrew S. Miller
D5D820D9405446D...

REVISIONS						SHEET NO.
NO.	BY:	DATE:	NO.	BY:	DATE:	S-6
1			3			TOTAL SHEETS
2			4			194

DRAWN BY : K.H. COMPTON DATE : 11/6/12
CHECKED BY : R.L. WHITCHER DATE : 11/15/12
DESIGNED BY : J.C. HALL DATE : 11/7/12

8/20/2014
P:\Jobs1\R2519B\Structures\Electronic Signed Plans\Str 1\401_011_S01_R2519B_P0S.dgn
kyle_compton