DocuSign Envelope ID: BF27B874-C54A-4DE8-B3F6-99270604783F

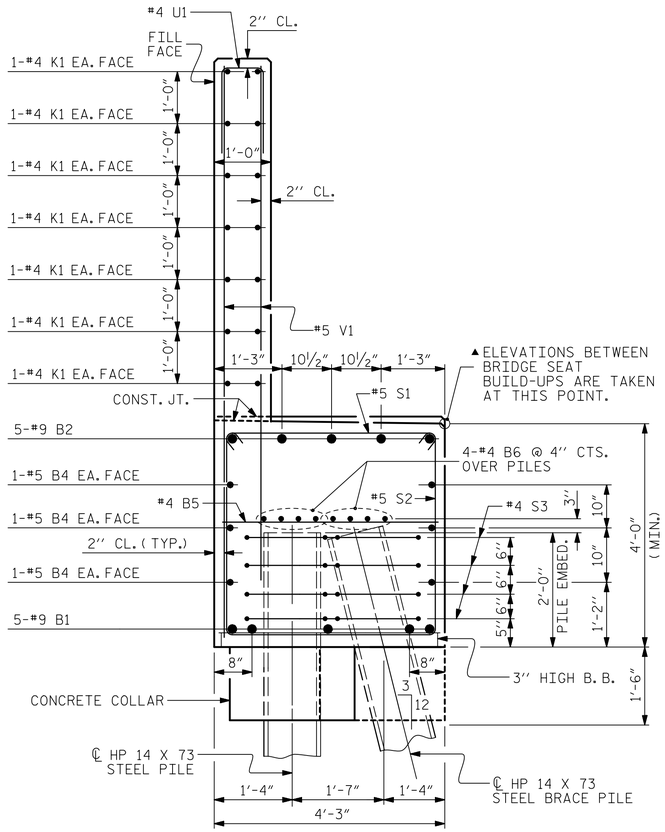

SECTION A-A

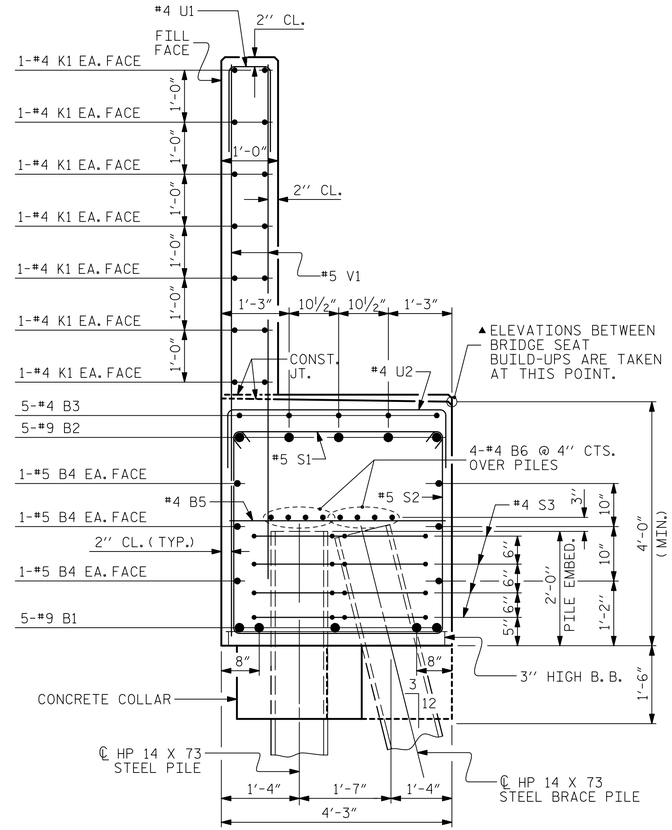

SECTION B-B

BAR TYPES

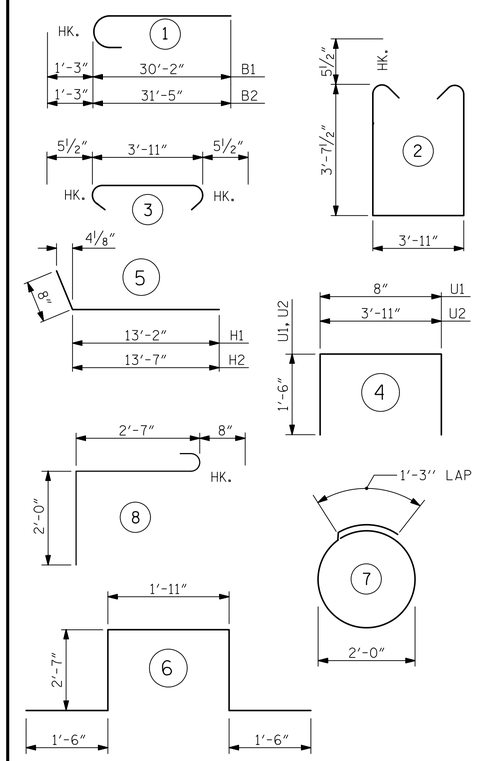

ALL BAR DIMENSIONS ARE OUT TO OUT.

BILL OF MATERIAL

END BENT 1

BAR	NO.	SIZE	TYPE	LENGTH	WEIGHT
B1	10	9	1	31'-5"	1068
B2	10	9	1	32'-8"	1111
B3	25	4	STR	2'-11"	49
B4	12	5	STR	28'-7"	358
B5	14	4	STR	3'-11"	37
B6	16	4	STR	28'-3"	302
H1	15	4	5	13'-10"	139
H2	15	4	5	14'-3"	143
K1	28	4	STR.	28'-1"	525
K2	4	4	STR	3'-0"	8
K3	2	4	STR	4'-7"	6
K4	2	4	STR	4'-0"	5
S1	103	5	3	4'-10"	519
S2	103	5	2	12'-1"	1298
S3	44	4	7	7'-7"	223
S4	3	6	8	5'-3"	24
S5	3	6	6	10'-1"	45
U1	49	4	4	3'-8"	120
U2	15	4	4	6'-11"	69
V1	92	5	STR	10'-4"	992
V2	46	5	STR	11'-9"	564
REINFORCING STEEL				LBS.	7605

CLASS A CONCRETE BREAKDOWN

POUR #1 - CAP, LOWER WINGS, WING BRACE PILE CAP & COLLARS	41.1 CY
POUR #2 - BACKWALL & UPPER WINGS	17.1 CY
TOTAL	58.2 CY

HP 14 x 73 STEEL PILES NO. 12	960 LF
PILE REDRIVES	12 EA

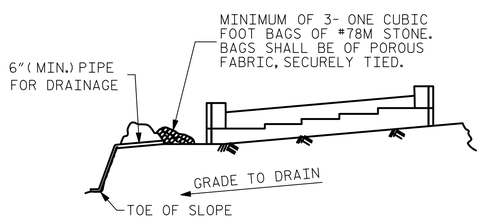

BAGGED STONE AND PIPE SHALL BE PLACED IMMEDIATELY AFTER COMPLETION OF END BENT EXCAVATION. PIPE MAY BE EITHER CONCRETE, CORRUGATED STEEL, CORRUGATED ALUMINUM ALLOY, OR CORRUGATED PLASTIC. PERFORATED PIPE WILL NOT BE ALLOWED.

BAGGED STONE SHALL REMAIN IN PLACE UNTIL THE ENGINEER DIRECTS THAT IT BE REMOVED. THE CONTRACTOR SHALL REMOVE AND DISPOSE OF SILT ACCUMULATIONS AT BAGGED STONE WHEN SO DIRECTED BY THE ENGINEER. BAGS SHALL BE REMOVED AND REPLACED WHENEVER THE ENGINEER DETERMINES THAT THEY HAVE DETERIORATED AND LOST THEIR EFFECTIVENESS.

NO SEPARATE PAYMENT WILL BE MADE FOR THIS WORK AND THE ENTIRE COST OF THIS WORK SHALL BE INCLUDED IN THE UNIT CONTRACT PRICE BID FOR THE SEVERAL PAY ITEMS.

TEMPORARY DRAINAGE AT END BENT

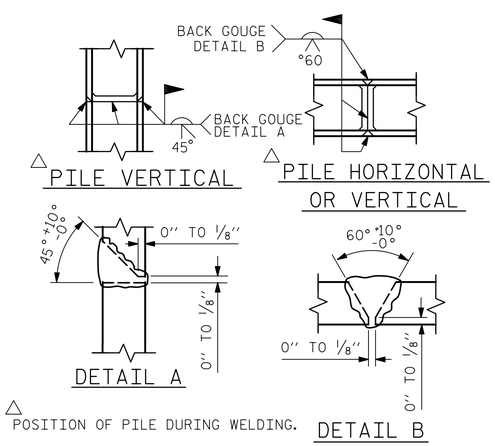

△ POSITION OF PILE DURING WELDING.

PILE SPLICE DETAILS

Prepared by
URS
URS Corporation - North Carolina
1600 Perimeter Park Drive, Suite 400
Morrisville, NC 27560
PHONE: 919 461-1100 FAX: 919 461-1415
NC LIC.# C-2243

PROJECT NO. R-2519B
YANCEY/MITCHELL COUNTY
STATION: 24+11.31 -L-

SHEET 3 OF 3

STATE OF NORTH CAROLINA
DEPARTMENT OF TRANSPORTATION
RALEIGH

SUBSTRUCTURE

END BENT 1

(LEFT LANE)

8/21/2014

NORTH CAROLINA PROFESSIONAL SEAL 038447 ENGINEER ANDREW S. MILLER

DocuSigned by: Andrew S. Miller
D5D82D09405446D...

REVISIONS						SHEET NO.
NO.	BY:	DATE:	NO.	BY:	DATE:	S-20
1			3			TOTAL SHEETS
2			4			194

DRAWN BY :	R. L. WHITCHER	DATE :	12/12/12
CHECKED BY :	K. H. COMPTON	DATE :	12/20/12
DESIGNED BY :	K. H. COMPTON	DATE :	12/10/12

8/20/2014
P:\Jobs1\R2519B\Structures\Electronic Signed Plans\Str 1\401_039_S01_R2519B_EB1_03.dgn
kyle_compton