DocuSign Envelope ID: BF27B874-C54A-4DE8-B3F6-99270604783F

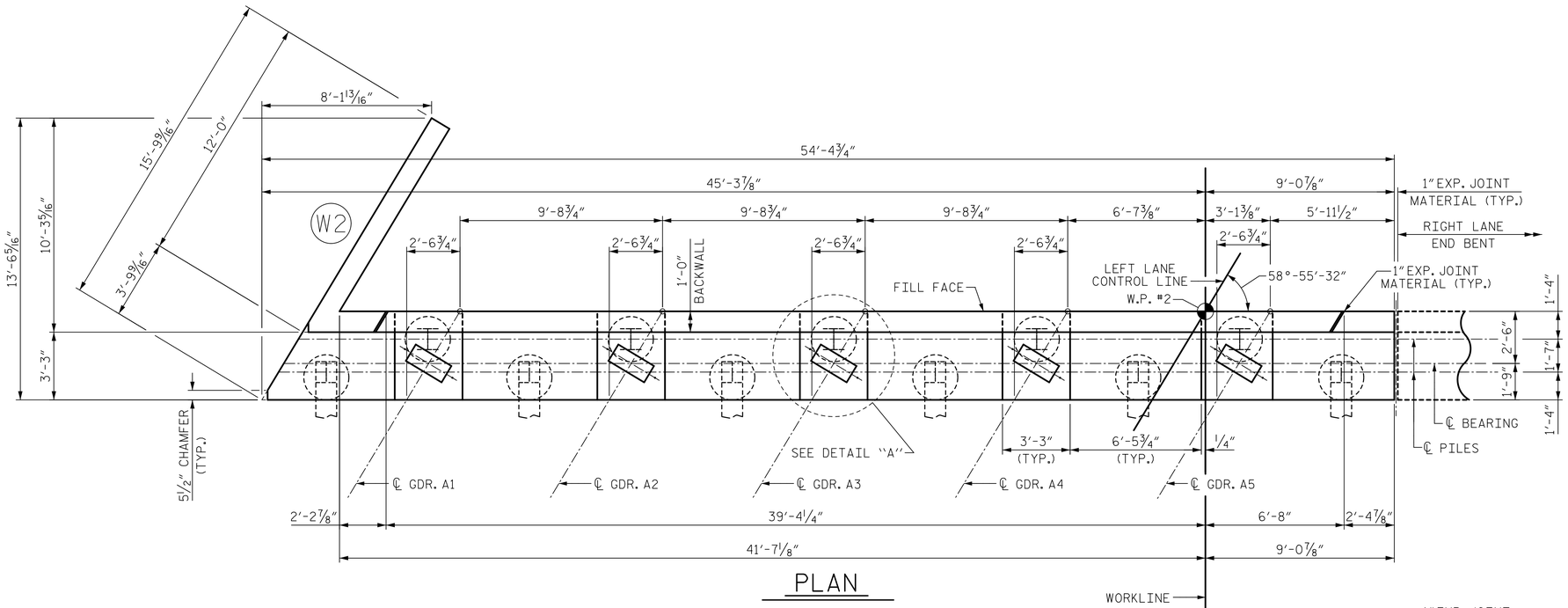

PLAN

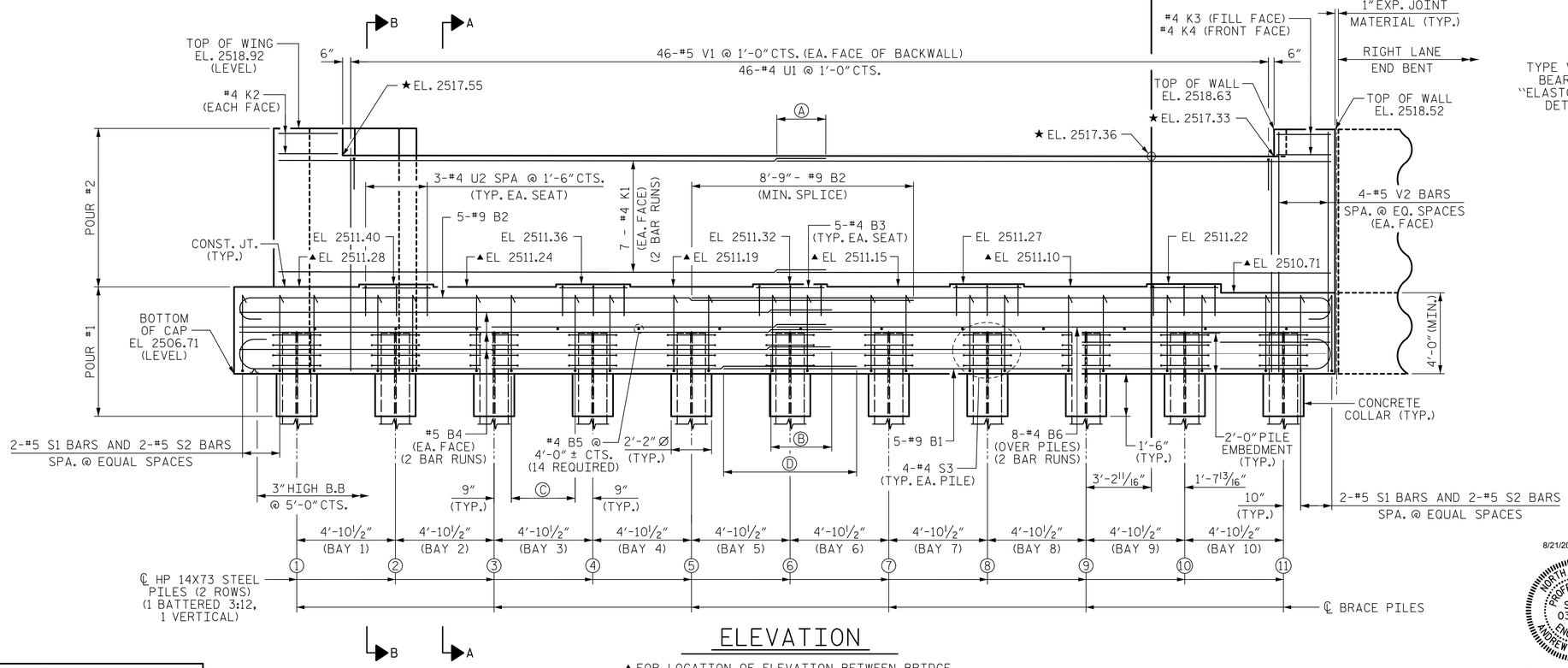

ELEVATION

▲ FOR LOCATION OF ELEVATION BETWEEN BRIDGE SEATS, SEE "SECTION A-A", SHEET 3 OF 3.

NOTES:

#5 V1 BARS IN BACKWALL SHALL BE PLACED WITH 2" CLEAR FROM TOP OF BACKWALL.

STIRRUPS AND "U" BARS IN CAP MAY BE SHIFTED AS NECESSARY TO CLEAR ANCHOR BOLTS.

THE TOP SURFACE OF THE CAP EXCEPT THE BRIDGE SEAT BUILDUPS SHALL BE SLOPED TRANSVERSELY FROM THE FILL FACE TO THE BACK FACE AT THE RATE OF 2%.

THE TOP SURFACE AREAS OF THE END BENT CAPS SHALL BE CURED IN ACCORDANCE WITH THE STANDARD SPECIFICATIONS EXCEPT THE MEMBRANE CURING COMPOUND METHOD SHALL NOT BE USED.

BACKWALL SHALL BE PLACED BEFORE APPLYING THE EPOXY PROTECTIVE COATING.

INSTALL THE 4" DIA. DRAIN PIPE THROUGH THE WING WALL AS REQUIRED FOR REINFORCED BRIDGE APPROACH FILLS. SEE THE ROADWAY PLANS. REINFORCING STEEL IN THE WING WALL MAY BE SHIFTED AS NECESSARY TO CLEAR THE DRAIN PIPE.

★ THIS ELEVATION TAKEN ON FILL FACE OF BACKWALL.

Ⓐ 2'-5" - #4 K1 & #4 B6 (MIN. SPLICE) (TYP.)

Ⓑ 3'-0" - #5 B4 (MIN. SPLICE)

Ⓒ 10-#5 S1 BARS AND 10-#5 S2 BARS SPA. @ 4 1/2" CTS. (TYP. ALL BAYS)

Ⓓ 6'-3" - #9 B1 (MIN. SPLICE)

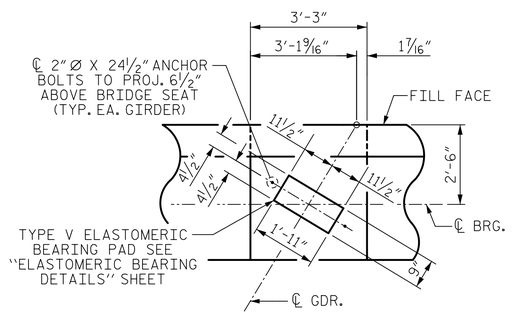

DETAIL "A"

(TYP. EA. GIRDER)

Prepared by
URS
URS Corporation – North Carolina
1600 Perimeter Park Drive, Suite 400
Morrisville, NC 27560
PHONE: 919 461-1100 FAX: 919 461-1415
NC LIC.# C-2243

PROJECT NO. R-2519B
YANCEY/MITCHELL COUNTY
STATION: 24+11.31 -L-

SHEET 1 OF 3

STATE OF NORTH CAROLINA
DEPARTMENT OF TRANSPORTATION
RALEIGH

SUBSTRUCTURE

END BENT 2

(LEFT LANE)

8/21/2014
NORTH CAROLINA PROFESSIONAL SEAL 038447 ENGINEER ANDREW S. MILLER

DocuSigned by:
Andrew S. Miller
D5DB20D94054460...

REVISIONS						SHEET NO.
NO.	BY:	DATE:	NO.	BY:	DATE:	S-21
1			3			TOTAL SHEETS
2			4			194

DRAWN BY : R.L. WHITCHER DATE : 2/11/13
CHECKED BY : K.H. COMPTON DATE : 2/18/13
DESIGNED BY : M.K.T/K.H.C DATE : 10/24/12

8/20/2014
P:\Jobs1\R2519B\Structures\Electronic Signed Plans\Str 1\401_041_S01_R2519B_EB2_01.dgn