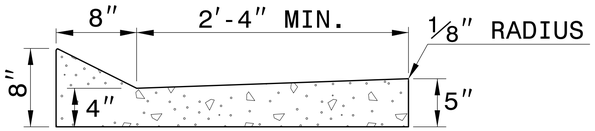

SHOULDER BERM GUTTER

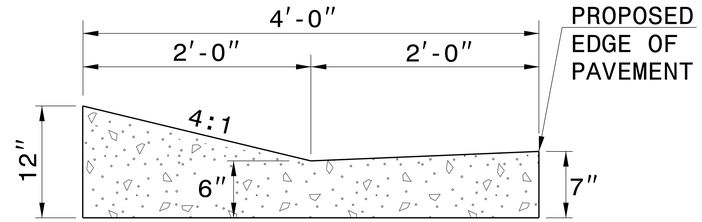

EXPRESSWAY GUTTER

NOTE: SEE STD. DWG. 846.01 FOR ADDITIONAL CURB AND GUTTER INFORMATION.

SEE ROADWAY PLANS FOR LOCATION OF CURB TRANSITION.

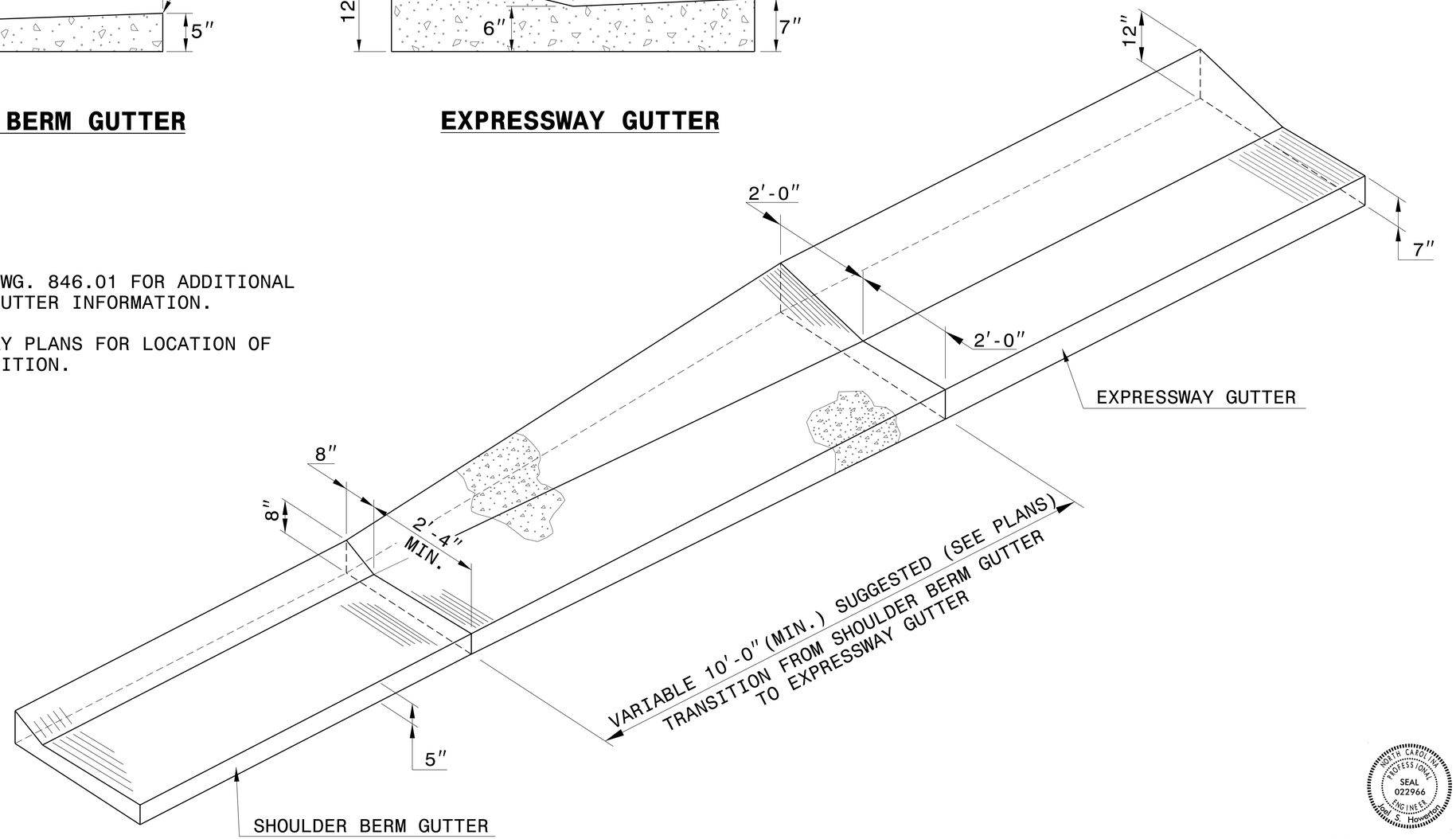

ISOMETRIC VIEW OF TRANSITION

NORTH CAROLINA PROFESSIONAL SEAL 022966 ENGINEER Joel S. Howerton

DocuSigned by: Joel Howerton 873F3D17DCDC45F... 9/5/2014

CONTRACT STANDARDS AND DEVELOPMENT UNIT
Office 919-707-6950 FAX 919-250-4119

DETAIL OF SHOULDER BERM GUTTER TO EXPRESSWAY GUTTER TRANSITION SECTION

ORIGINAL BY:	T.S.Spell	DATE:	8-13-02
MODIFIED BY:		DATE:	
CHECKED BY:		DATE:	
FILE SPEC.:	w:usr/details/stand/cgtransit.dgn		

5/14/99
$$$$SYSTME$$$$
$$$$SCENE$$$$
$$$$DGN$$$$
$$$$USERNAME$$$$