PROJECT REFERENCE NO.	SHEET NO.
R-2519B	2C-5

GENERAL NOTES:

USE CLASS "B" CONCRETE THROUGHOUT.

OPTIONAL CONSTRUCTION - MONOLITHIC POUR, 2" KEYWAY, OR #4 BAR DOWELS AT 12" CENTERS AS DIRECTED BY THE ENGINEER.

USE FORMS FOR THE CONSTRUCTION OF THE BOTTOM SLAB.

CHAMFER ALL EXPOSED CORNERS 1".

2" MINIMUM CONCRETE COVERAGE ON ALL REBAR.

HEIGHT DIMENSIONS MAY BE ADJUSTED DOWN FOR SMALLER PIPES AS DIRECTED BY THE ENGINEER.

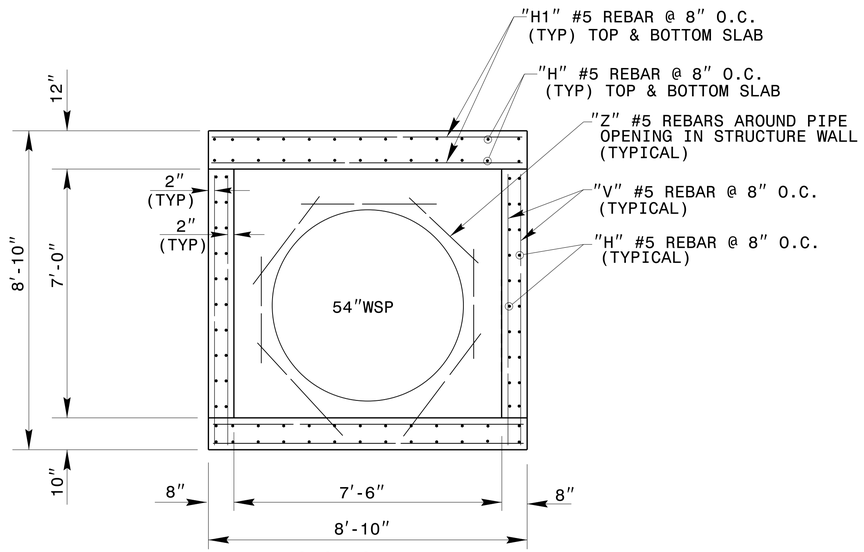

SECTION A-A

BILL OF MATERIALS				
BAR	NO.	SIZE	LENGTH	WEIGHT
H	92	#5	7'-0"	672
H1	84	#5	8'-6"	745
V	92	#5	7'-8"	736
Z	14	#5	4'-0"	59
TOTAL REINF. STEEL (LBS.)				2212
TOTAL CONC. (CU. YDS.)				9.6

* NO DEDUCTION HAS BEEN MADE FOR PIPES

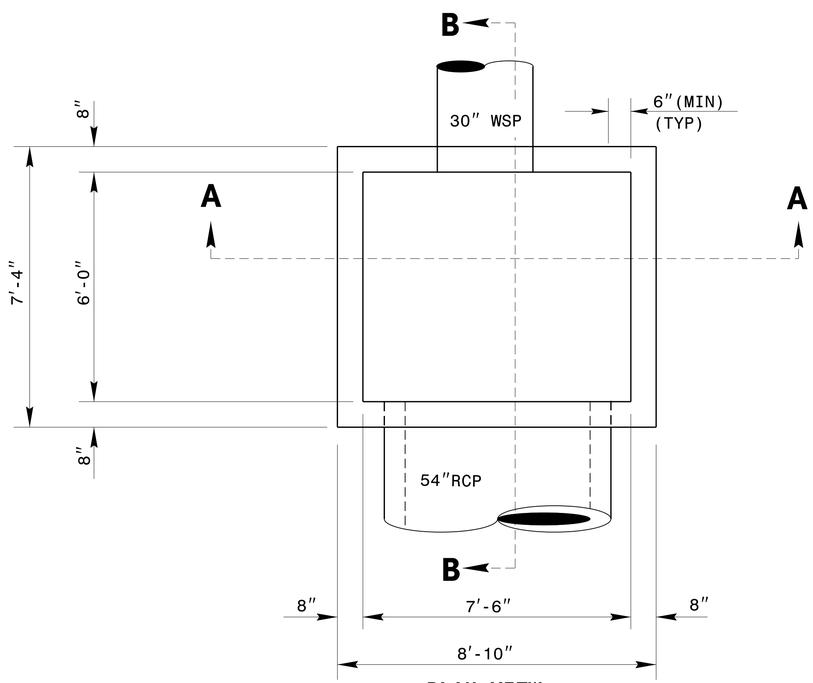

PLAN VIEW

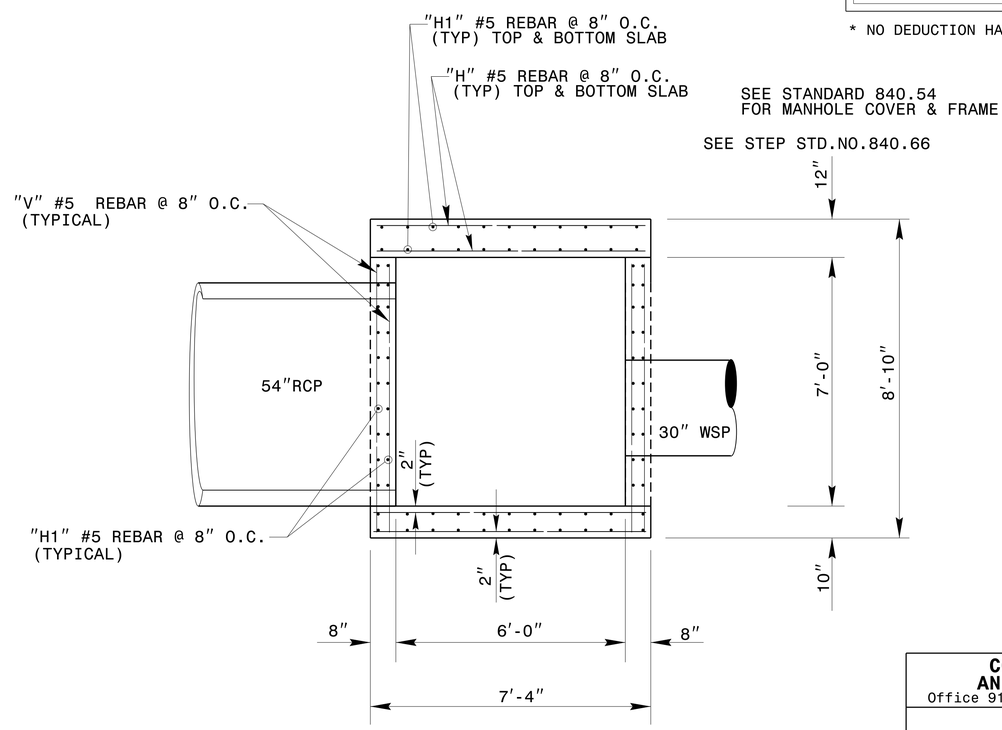

SECTION B-B

DRAWING NOT TO SCALE

NORTH CAROLINA PROFESSIONAL SEAL 022966 ENGINEER Joel S. Howerton

DocuSigned by: Joel Howerton 9/5/2014
8236E3D17DC0C45E

CONTRACT STANDARDS AND DEVELOPMENT UNIT
Office 919-250-4128 FAX 919-250-4119

TRAFFIC BEARING JUNCTION BOX

ORIGINAL BY: _____ DATE: _____
MODIFIED BY: nbritt DATE: 04/22/08
CHECKED BY: _____ DATE: _____
FILE SPEC.: detail/nbritt/english/hydro/66 tbjb.dgn

$$$$SYSTIME$$$$
$$$$SYSDATE$$$$
$$$$USERNAME$$$$