PROJECT REFERENCE NO.	SHEET NO.
R-2519B	2C-4

GENERAL NOTES:

USE CLASS "B" CONCRETE THROUGHOUT.

OPTIONAL CONSTRUCTION - MONOLITHIC POUR, 2" KEYWAY, OR #4 BAR DOWELS AT 12" CENTERS AS DIRECTED BY THE ENGINEER.

USE FORMS FOR THE CONSTRUCTION OF THE BOTTOM SLAB.

CHAMFER ALL EXPOSED CORNERS 1".

2" MINIMUM CONCRETE COVERAGE ON ALL REBAR.

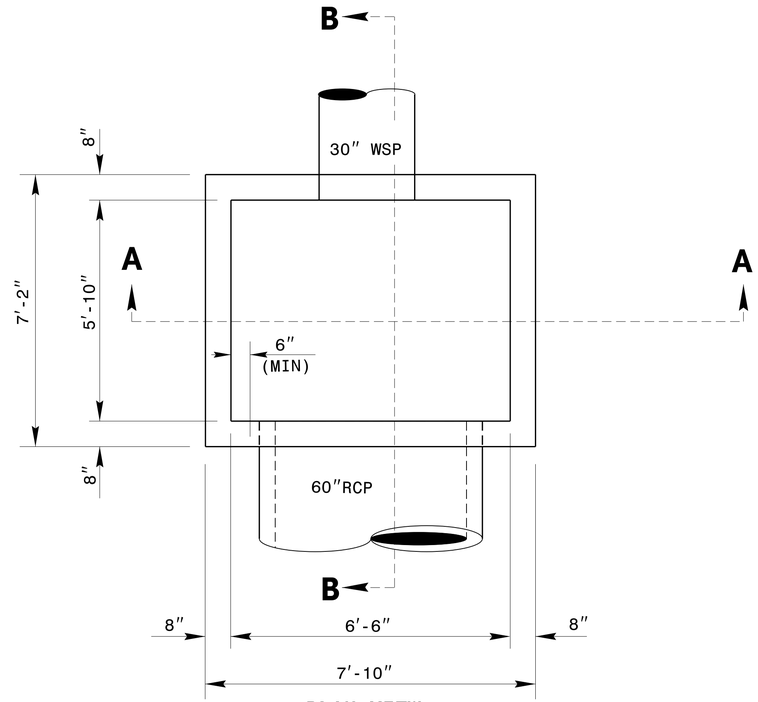

PLAN VIEW

BILL OF MATERIALS				
BAR	NO.	SIZE	LENGTH	WEIGHT
H	92	#5	6'-10"	656
H1	84	#5	7'-6"	657
V	92	#5	7'-4"	703
Z	8	#5	3'-0"	25
TOTAL REINF. STEEL (LBS.)				2041
TOTAL CONC. (CU. YDS.)				8.3

* NO DEDUCTION HAS BEEN MADE FOR PIPES

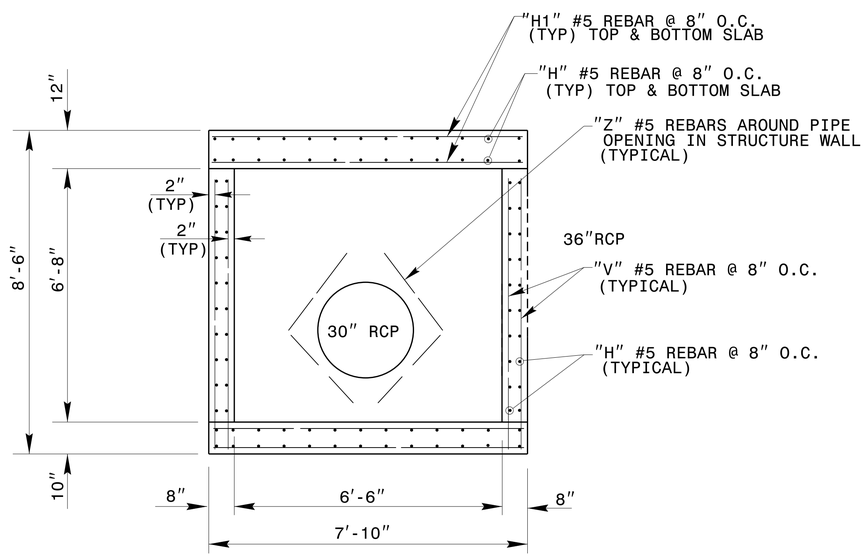

SECTION A-A

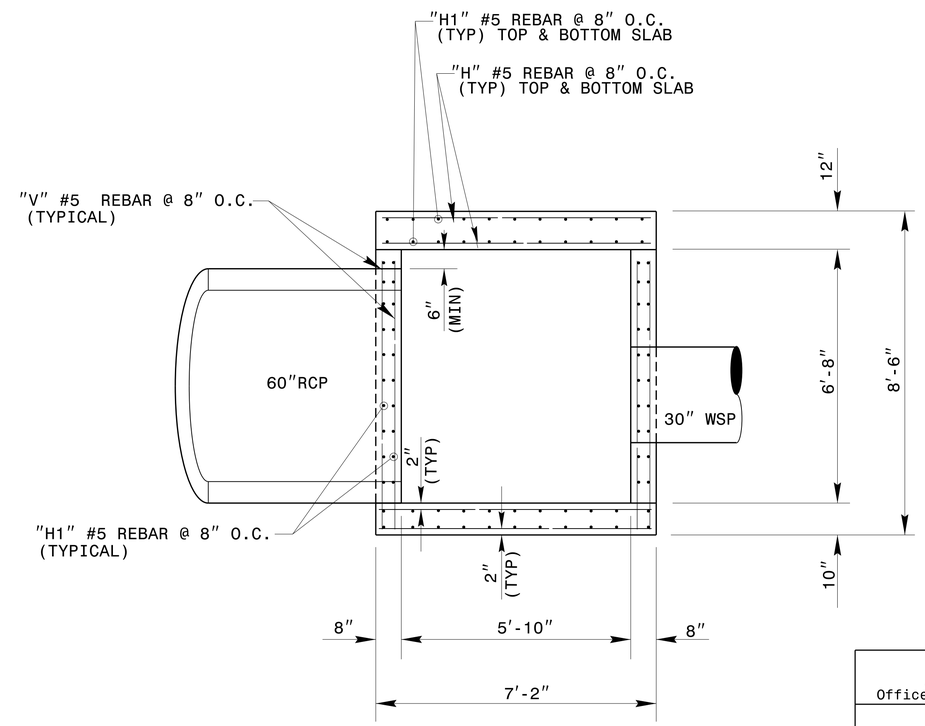

SECTION B-B

DRAWING NOT TO SCALE

NORTH CAROLINA PROFESSIONAL SEAL 022966 ENGINEER Joel S. Howerton

DocuSigned by: Joel Howerton 9/5/2014
B73F3D17DCDC45F...

CONTRACT STANDARDS AND DEVELOPMENT UNIT
Office 919-707-6950 FAX 919-250-4119

TRAFFIC BEARING JUNCTION BOX

ORIGINAL BY: DATE:
MODIFIED BY: kkempf DATE: 12/09/13
CHECKED BY: DATE:
FILE SPEC.: detail/kkempf/english/72 tbjb.dgn

$$$$SYSTIME$$$$
$$$$USERNAME$$$$
$$$$DGNFILE$$$$