PROJECT REFERENCE NO.	SHEET NO.
R-2519B	2A-3

ROADWAY DESIGN ENGINEER

NORTH CAROLINA PROFESSIONAL SEAL 25477 ENGINEER THAD F. DUNCAN

DocuSigned by: Thad F. Duncan 9/5/2014

12B4BCAA8517148E...

PAVEMENT DESIGN ENGINEER

NORTH CAROLINA PROFESSIONAL SEAL 031484 ENGINEER VLADIMIR MITCHEV

DocuSigned by: Vladimir Mitchev 9/5/2014

A0988F46B5A41C...

FINAL PAVEMENT SCHEDULE	
C1	1¼″ SF9.5A
C2	1½″ S9.5B
C3	2½″ SF9.5A
C4	3″ S9.5B
C6	VAR. S9.5A
C7	VAR. S9.5B
E1	4″ B25.0B
E2	4½″ B25.0B
E3	5½″ B25.0B
E6	VAR. B25.0B
T	EARTH MATERIAL
U	EXISTING PAVE.
W	WEDGING

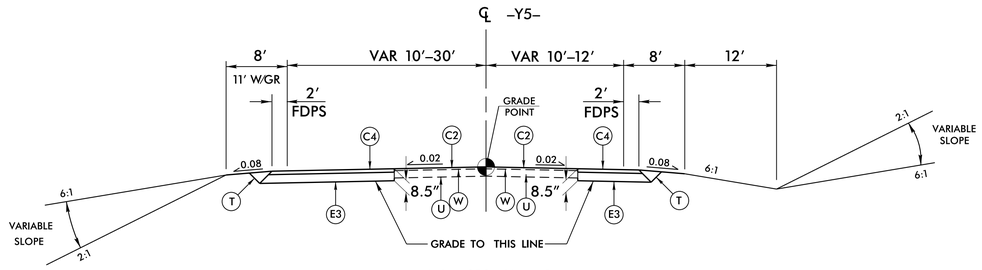

TYPICAL SECTION NO. 7

USE TYPICAL SECTION NO. 7

–Y5– STA. 10+46.00 TO –Y5– STA. 14+15.32

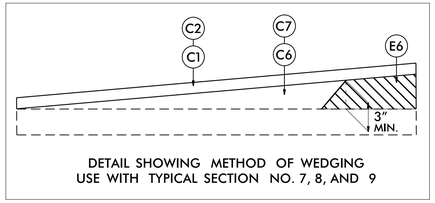

DETAIL SHOWING METHOD OF WEDGING
USE WITH TYPICAL SECTION NO. 7, 8, AND 9

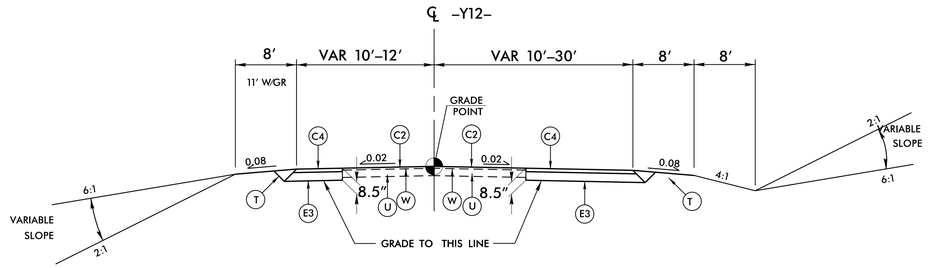

TYPICAL SECTION NO. 8

USE TYPICAL SECTION NO. 8

–Y12– STA. 10+03.00 TO –Y12– STA. 13+05.24

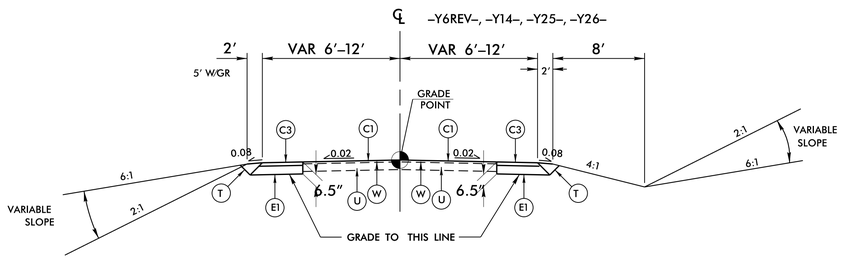

TYPICAL SECTION NO. 9

USE TYPICAL SECTION NO. 9

–Y6REV– STA. 10+34.00 TO –Y6REV– STA. 14+06.45
–Y14– STA. 10+34.04 TO –Y14– STA. 11+75.00
–Y25– STA. 10+84.27 TO –Y25– STA. 11+65.00
–Y26– STA. 10+45.40 TO –Y26– STA. 13+26.12

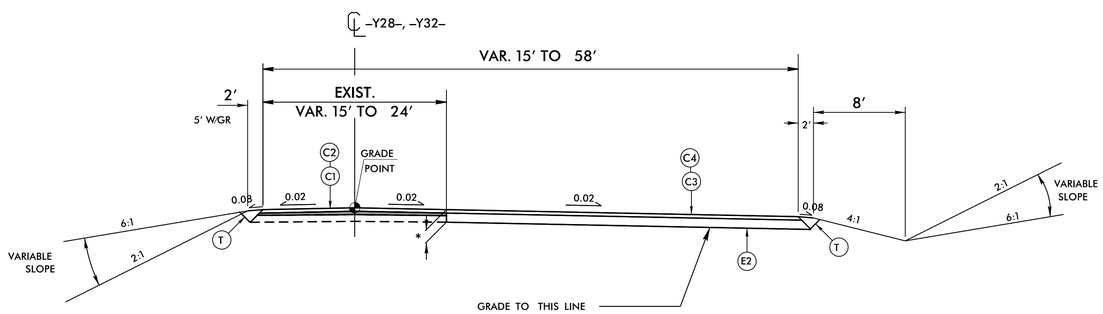

TYPICAL SECTION NO. 10

USE TYPICAL SECTION NO. 10
*USE C3 AND E2 = 7″ DEPTH
USE C1 FOR RESURFACING

–Y28– STA. 11+31.62 TO –Y28– STA. 12+04.00
–Y32– STA. 10+56.96 TO –Y32– STA. 11+47.47

*USE C4 AND E2 = 7.5″ DEPTH

6/2/99

27-AUG-2014 09:40
r:\roadway\proj\r2519b_rdy_typ.dgn
$$$$USERNAME$$$$