STATE OF
NORTH CAROLINA
DEPT. OF TRANSPORTATION
DIVISION OF HIGHWAYS
RALEIGH, N.C.

ENGLISH DETAIL DRAWING FOR
CONCRETE CATCH BASIN
(3 OR 4 SIDE OPEN THROAT)
(MANHOLE OPTIONAL)

SHEET 1 OF 2
840D04

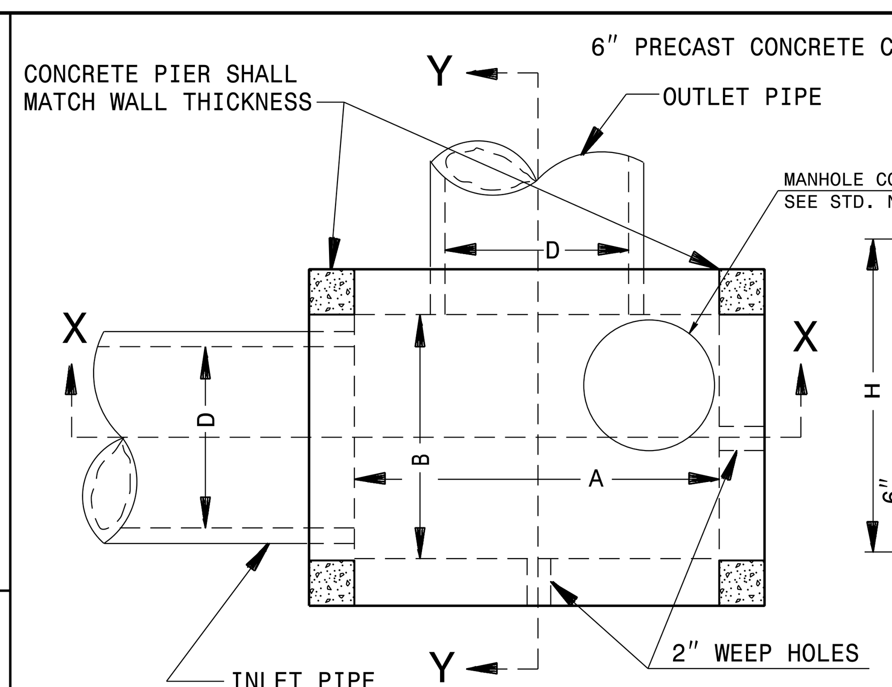

PLAN

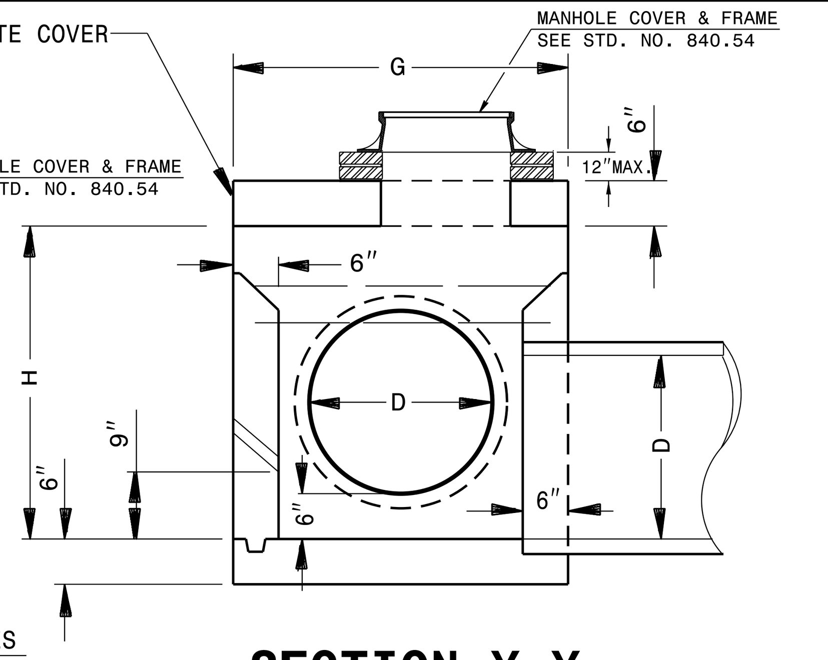

SECTION Y-Y

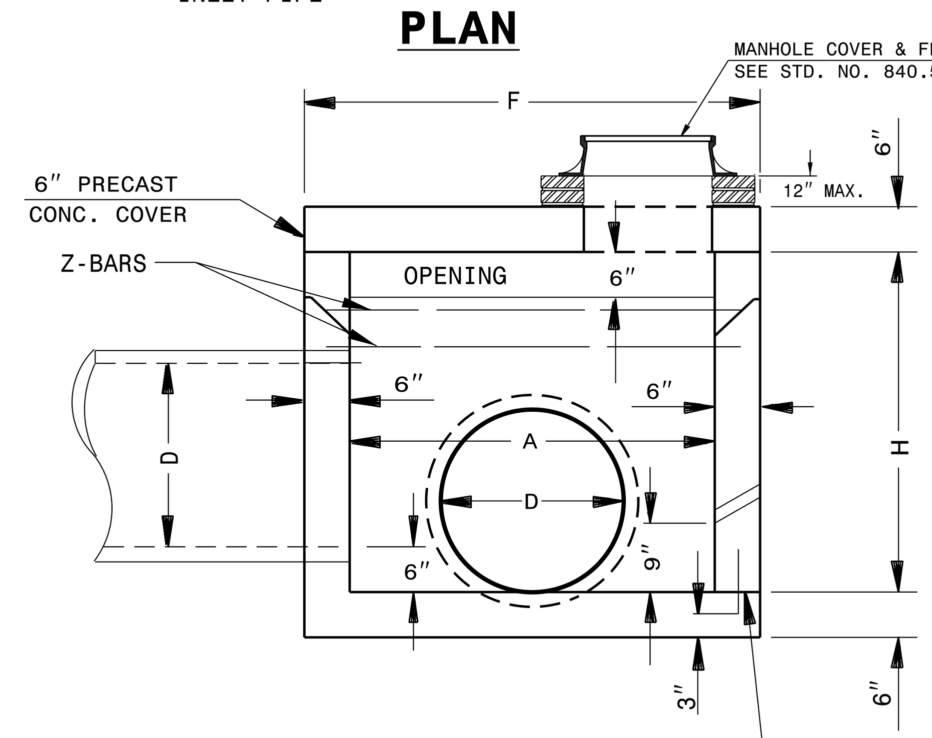

SECTION X-X

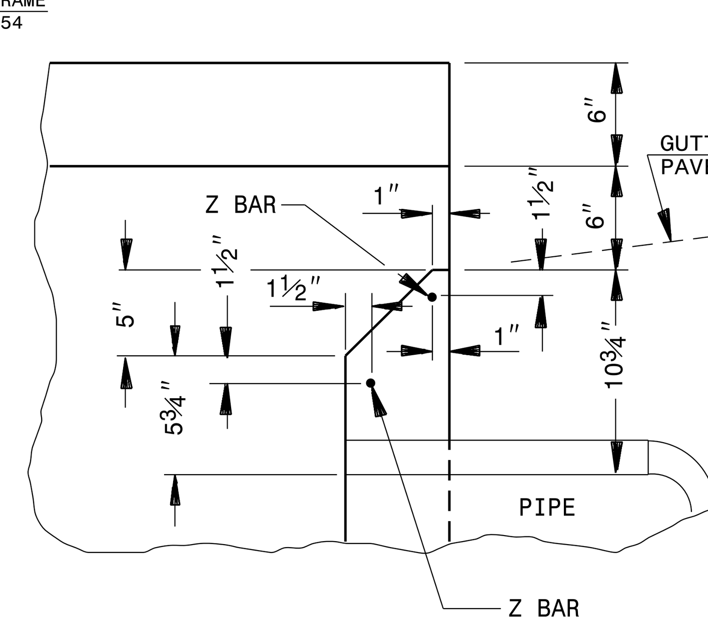

PART SECTION Y-Y
SHOWING METHOD OF CONSTRUCTION FOR 6" OPENING

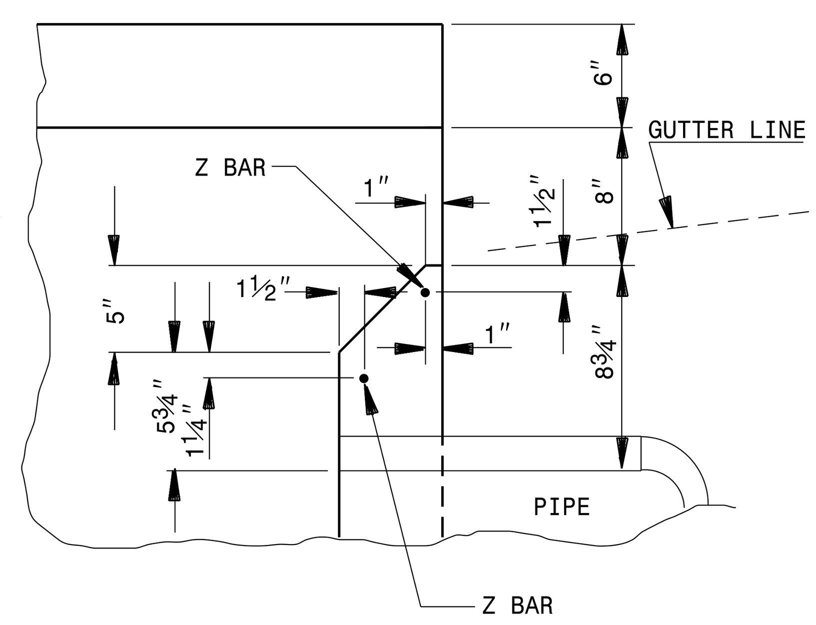

PART SECTION Y-Y
SHOWING METHOD OF CONSTRUCTION IF INCREASED OPENING IS USED

GENERAL NOTES:
ALL CATCH BASINS OVER 3'-6" IN DEPTH TO BE PROVIDED WITH STEPS 12" ON CENTERS. STEPS SHALL BE IN ACCORDANCE WITH STD. 840.66.
ALL EXPOSED CORNERS TO BE CHAMFERED 1".
CLASS "B" CONCRETE TO BE USED THROUGHOUT.
2" PIPE WEEPHOLES TO BE PLACED AS DIRECTED BY ENGINEER.
THE 6" OPENING SHOWN MAY BE INCREASED TO 8" MAXIMUM IF DEEMED TO BE NECESSARY BY THE ENGINEER.
OPTIONAL CONSTRUCTION - MONOLITHIC POUR, 2" KEYWAY, OR #5 BAR DOWELS AT 12" CENTERS AS DIRECTED BY THE ENGINEER.
FORMS ARE TO BE USED FOR THE CONSTRUCTION OF THE BOTTOM SLAB.
IF REINFORCED CONCRETE PIPE IS SET IN BASE SLAB OF BOX, ADD TO BASE AS SHOWN ON STD. DWG. 840.00.
A STONE DRAIN CONSISTING OF 1 CUBIC FOOT OF NO. 78M STONE CONTAINED IN A BAG OF POROUS FABRIC SHALL BE PLACED AT EACH WEEP HOLE.
FOR 8' IN HEIGHT OR LESS USE 6" WALLS AND BOTTOM SLAB.
OVER 8' IN HEIGHT USE 8" WALLS AND BOTTOM SLAB. QUANTITIES TO BE ADJUSTED ACCORDINGLY.
DIMENSIONS MAY BE ADJUSTED AS DIRECTED BY THE ENGINEER.

MIN. DIMENSIONS AND QUANTITIES FOR CONCRETE CATCH BASIN (BASED ON MIN. HEIGHT, H)

DIM'S OF BOX & PIPE				REINFORCING						TOP & BOT. SLAB DIMENSIONS		CU. YDS. CONC. IN BOX			TOTAL QUANTITIES BOX & SLABS		DEDUCTION ONE PIPE		DED. ONE 6" THROAT OPENING
PIPE	SPAN	WIDTH	HEIGHT	BARS – X		BARS – Y		BARS – Z											
D	A	B	H	NO.	LENGTH	NO.	LENGTH	NO.	LENGTH	F	G	TOP SLAB	BOT. SLAB	WALL/FT. HT.	LBS. REINF.	YD³ (MIN H)	C.S.	R.C.	YD³
12"	3'-6"	2'-3"	1'-10"	4	3'-0"	6	4'-3"	2	4'-3"	4'-6"	3'-3"	0.181	0.271	0.250	27	1.046	0.015	0.032	0.046
15"	3'-6"	2'-3"	2'-1"	4	3'-0"	6	4'-3"	2	4'-3"	4'-6"	3'-3"	0.181	0.271	0.250	27	1.108	0.023	0.036	0.046
18"	4'-0"	2'-8"	2'-4"	5	3'-5"	7	4'-9"	2	4'-9"	5'-0"	3'-8"	0.226	0.340	0.284	35	1.379	0.033	0.049	0.053
24"	4'-0"	2'-8"	2'-10"	5	3'-5"	7	4'-9"	2	4'-9"	5'-0"	3'-8"	0.226	0.340	0.284	35	1.521	0.059	0.085	0.053
30"	4'-0"	3'-6"	3'-4"	5	4'-3"	9	4'-9"	2	4'-9"	5'-0"	4'-6"	0.278	0.417	0.315	43	1.916	0.092	0.127	0.053
36"	4'-6"	4'-0"	3'-10"	5	4'-9"	10	5'-3"	2	5'-3"	5'-6"	5'-0"	0.340	0.510	0.352	51	2.390	0.132	0.178	0.059
42"	5'-0"	4'-6"	4'-4"	5	5'-3"	12	5'-9"	2	5'-9"	6'-0"	5'-6"	0.407	0.611	0.389	64	2.914	0.180	0.243	0.066
48"	5'-0"	5'-0"	4'-10"	5	5'-9"	13	5'-9"	2	5'-9"	6'-0"	6'-0"	0.444	0.666	0.407	68	3.298	0.235	0.317	0.066

STATE OF
NORTH CAROLINA
DEPT. OF TRANSPORTATION
DIVISION OF HIGHWAYS
RALEIGH, N.C.

ENGLISH DETAIL DRAWING FOR
CONCRETE CATCH BASIN
(3 OR 4 SIDE OPEN THROAT)
(MANHOLE OPTIONAL)

SHEET 1 OF 2
840D04

STATE OF
NORTH CAROLINA
DEPT. OF TRANSPORTATION
DIVISION OF HIGHWAYS
RALEIGH, N.C.

ENGLISH DETAIL DRAWING FOR
CONCRETE CATCH BASIN
(3 OR 4 SIDE OPEN THROAT)
(MANHOLE OPTIONAL)

SHEET 2 OF 2
840D04

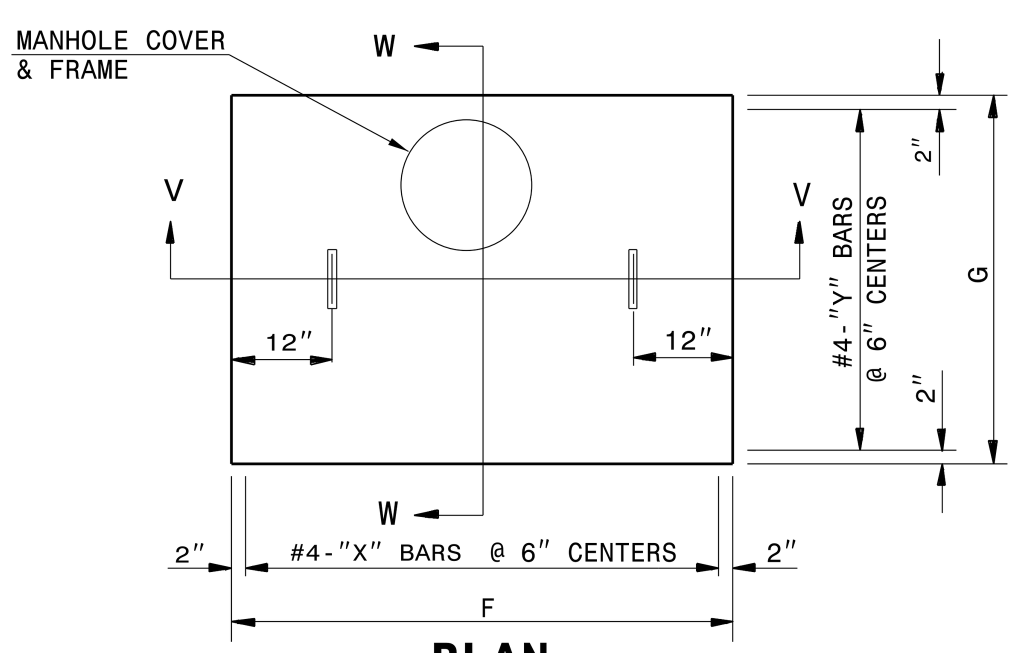

PLAN
PLAN OF PRECAST COVER

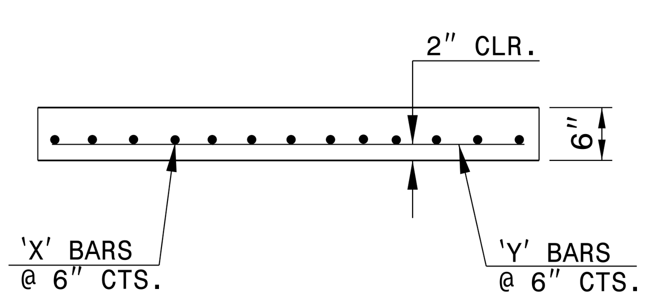

SECTION V-V

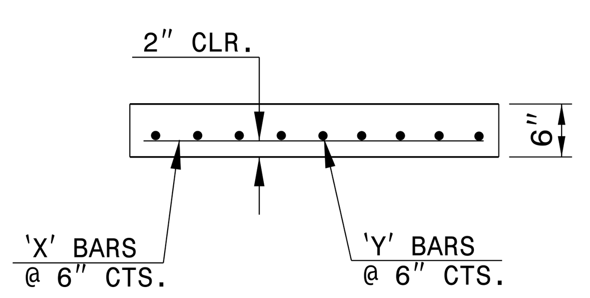

SECTION W-W

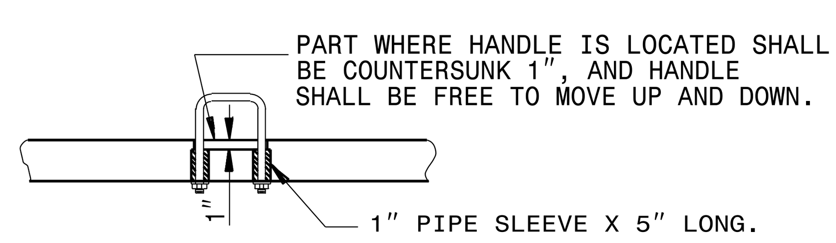

PART SECTION
THRU COVER SHOWING HANDLE

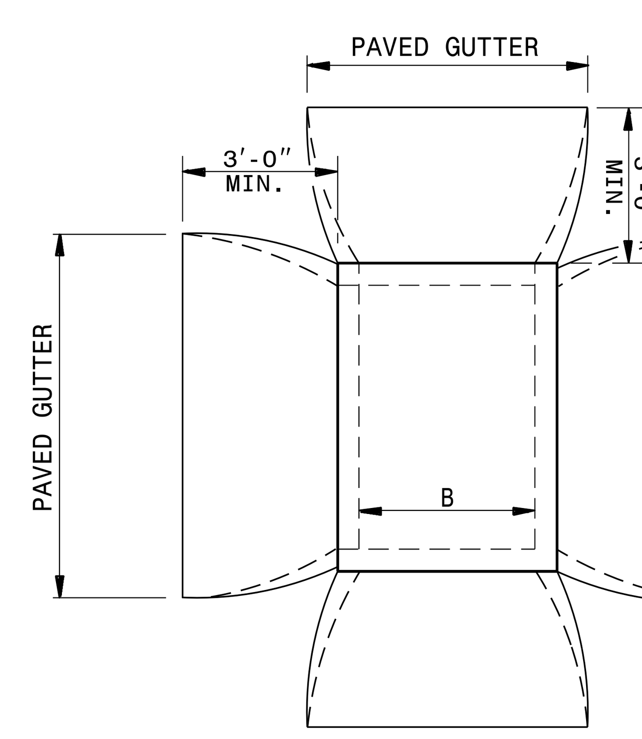

PLAN OF CATCH BASIN IN MEDIAN STRIP

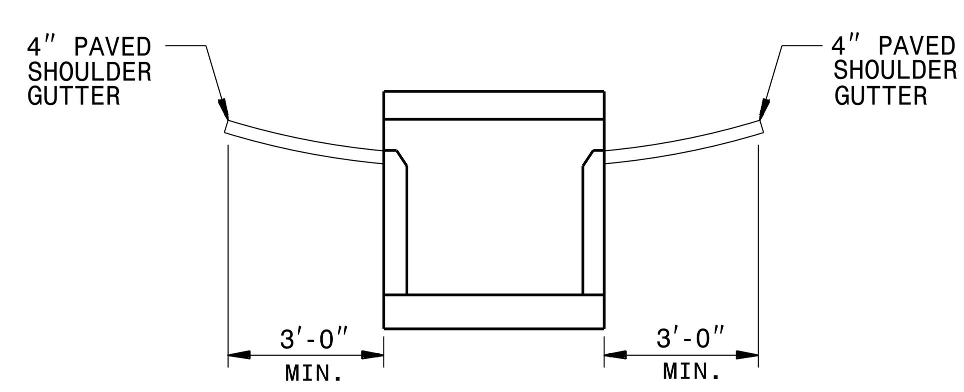

SECTION OF CATCH BASIN MEDIAN STRIP
DETAIL SHOWING METHOD OF PLACING CATCH BASIN AND PAVED SHOULDER GUTTER

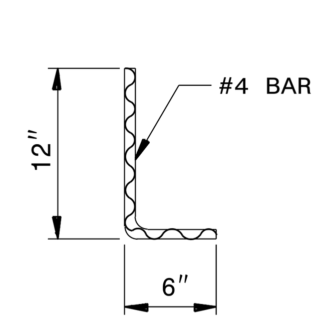

DOWEL

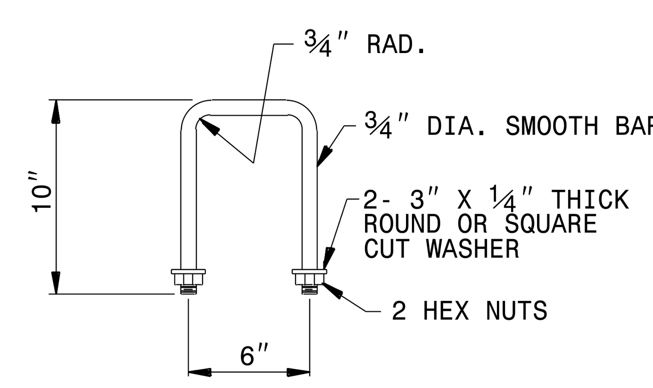

DETAIL OF HANDLE

STATE OF
NORTH CAROLINA
DEPT. OF TRANSPORTATION
DIVISION OF HIGHWAYS
RALEIGH, N.C.

ENGLISH DETAIL DRAWING FOR
CONCRETE CATCH BASIN
(3 OR 4 SIDE OPEN THROAT)
(MANHOLE OPTIONAL)

SHEET 2 OF 2
840D04

NORTH CAROLINA PROFESSIONAL SEAL 022966 ENGINEER Joel S. Howerton

DocuSigned by: Joel Howerton 873F3D17DCDC45F... 9/5/2014

CONTRACT STANDARDS AND DEVELOPMENT UNIT
Office 919-707-6950 FAX 919-250-4119

SEE PLATE FOR TITLE

ORIGINAL BY: DATE:
MODIFIED BY: rnbritt DATE: 07-03-2014
CHECKED BY: DATE:
FILE SPEC.: details/nbritt/english/hydro/840d04.dgn