STATE OF NORTH CAROLINA
DEPT. OF TRANSPORTATION
DIVISION OF HIGHWAYS
RALEIGH, N.C.

ENGLISH STANDARD DRAWING FOR
PERFORATED CONCRETE CATCH BASIN
W/SINGLE PIPE
12" THRU 48" PIPE

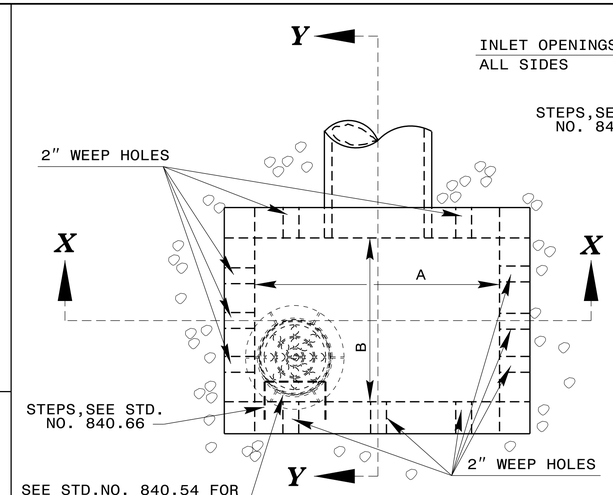

PLAN

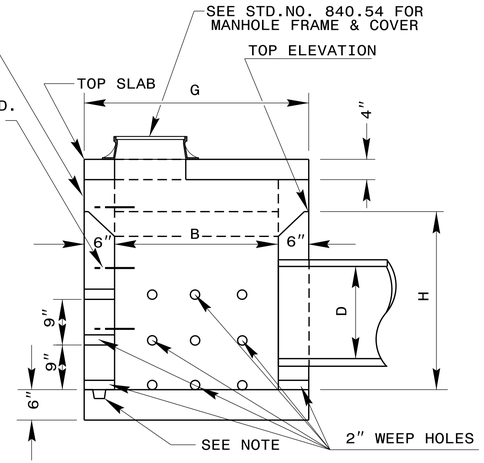

SECTION Y-Y

NOTES:

USE CLASS "B" CONCRETE THROUGHOUT.

PROVIDE ALL CATCH BASINS OVER 3'-6" IN DEPTH WITH STEPS 12" ON CENTER. USE STEPS WHICH COMPLY WITH STD. DRAWING 840.66.

OPTIONAL CONSTRUCTION - MONOLITHIC POUR, 2" KEYWAY, OR #4 BAR DOWELS AT 12" CENTERS AS DIRECTED BY THE ENGINEER.

USE FORMS FOR THE CONSTRUCTION OF THE BOTTOM SLAB.

IF REINFORCED CONCRETE PIPE IS SET IN BOTTOM SLAB OF BOX, ADD TO SLAB AS SHOWN ON STD. NO. 840.00.

FOR 8'-0" IN HEIGHT OR LESS USE 6" WALLS AND BOTTOM SLAB. OVER 8'-0" TO 16'-0" IN HEIGHT USE 8" WALLS AND BOTTOM SLAB. ADJUST QUANTITIES ACCORDINGLY.

INSTALL 2" WEEPHOLES AS SHOWN ON PLAN.

CHAMFER ALL EXPOSED CORNERS 1".

PROVIDE MANHOLE IN TOP SLAB AS DIRECTED BY THE ENGINEER.

DRAWING NOT TO SCALE.

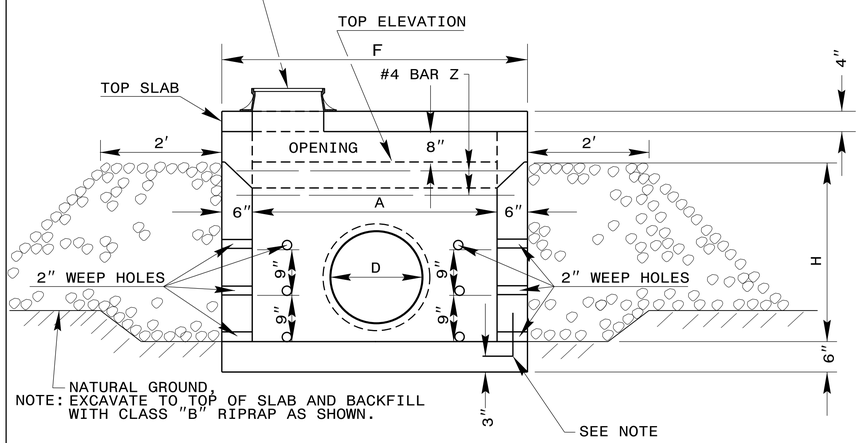

SECTION X-X

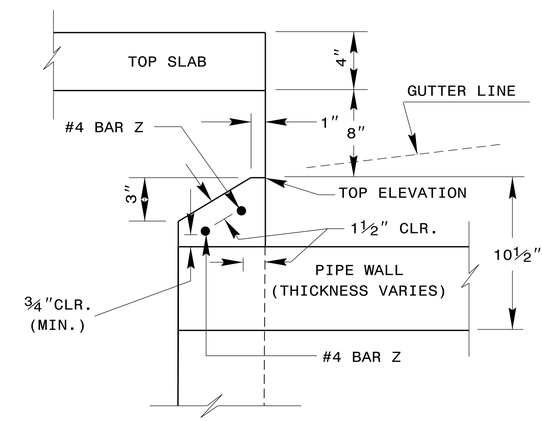

PART SECTION Y-Y

SHOWING DETAILS AT OPENING

MIN. DIMENSIONS AND QUANTITIES FOR CONCRETE CATCH BASIN (BASED ON MIN. HEIGHT, H)

DIM'S OF BOX & PIPE				REINFORCING						TOP & BOT. SLAB DIMENSIONS		CU. YDS. CONC. IN BOX			TOTAL QUANTITIES BOX & SLABS		DEDUCTION ONE PIPE		DED. ONE 6" THROAT OPENING
PIPE	SPAN	WIDTH	HEIGHT	BARS - X		BARS - Y		BARS - Z											
D	A	B	H	NO.	LENGTH	NO.	LENGTH	NO.	LENGTH	F	G	TOP SLAB	BOT. SLAB	WALL/FT. HT.	LBS. REINF.	YD^3 (MIN H)	C.S.	R.C.	YD^3
12"	3'-6"	2'-3"	1'-10"	4	3'-0"	6	4'-3"	2	4'-3"	4'-6"	3'-3"	0.181	0.271	0.250	27	1.046	0.015	0.032	0.046
15"	3'-6"	2'-3"	2'-1"	4	3'-0"	6	4'-3"	2	4'-3"	4'-6"	3'-3"	0.181	0.271	0.250	27	1.108	0.023	0.036	0.046
18"	4'-0"	2'-8"	2'-4"	5	3'-5"	7	4'-9"	2	4'-9"	5'-0"	3'-8"	0.226	0.340	0.284	35	1.379	0.033	0.049	0.053
24"	4'-0"	2'-8"	2'-10"	5	3'-5"	7	4'-9"	2	4'-9"	5'-0"	3'-8"	0.226	0.340	0.284	35	1.521	0.059	0.085	0.053
30"	4'-0"	3'-6"	3'-4"	5	4'-3"	9	4'-9"	2	4'-9"	5'-0"	4'-6"	0.278	0.417	0.315	43	1.916	0.092	0.127	0.053
36"	4'-6"	4'-0"	3'-10"	5	4'-9"	10	5'-3"	2	5'-3"	5'-6"	5'-0"	0.340	0.510	0.352	51	2.390	0.132	0.178	0.059
42"	5'-0"	4'-6"	4'-4"	5	5'-3"	12	5'-9"	2	5'-9"	6'-0"	5'-6"	0.407	0.611	0.389	64	2.914	0.180	0.243	0.066
48"	5'-0"	5'-0"	4'-10"	5	5'-9"	13	5'-9"	2	5'-9"	6'-0"	6'-0"	0.444	0.666	0.407	68	3.298	0.235	0.317	0.066

STATE OF NORTH CAROLINA
DEPT. OF TRANSPORTATION
DIVISION OF HIGHWAYS
RALEIGH, N.C.

ENGLISH STANDARD DRAWING FOR
PERFORATED CONCRETE CATCH BASIN
W/SINGLE PIPE
12" THRU 48" PIPE

SHEET 1 OF 2
840D04

NORTH CAROLINA PROFESSIONAL SEAL 022966 ENGINEER Joel S. Howerton

DocuSigned by: Joel Howerton 9/5/2014
873F3D17DCDC45F...

CONTRACT STANDARDS AND DEVELOPMENT UNIT
Office 919-707-6950 FAX 919-250-4119

SEE PLATE FOR TITLE

ORIGINAL BY: DATE:
MODIFIED BY: rnbritt DATE: 10-16-13
CHECKED BY: DATE:
FILE SPEC.: details/nbritt/english/rural/r2519b otcb.dgn

5/14/99

$$$$SYSTEM$$$$
$$$$USERNAME$$$$