PROJECT REFERENCE NO.	SHEET NO.
R-2519B	2A-1

ROADWAY DESIGN ENGINEER

NORTH CAROLINA PROFESSIONAL SEAL 25477 ENGINEER HAO F. DUNCAN

DocuSigned by: Hao F. Duncan 9/2/2014

PAVEMENT DESIGN ENGINEER

NORTH CAROLINA PROFESSIONAL SEAL 031484 ENGINEER VLADIMIR MITCHEV

DocuSigned by: Vladimir Mitchev 9/5/2014

PAVEMENT SCHEDULE

(FINAL PAVEMENT SCHEDULE)

C1	PROP. APPROX. 1¼″ ASPHALT CONCRETE SURFACE COURSE, TYPE SF9.5A, AT AN AVERAGE RATE OF 137.5 LBS. PER SQ. YD.	R4	41″ PRECAST REINFORCED CONCRETE BARRIER, SINGLE FACED
C2	PROP. APPROX. 1½″ ASPHALT CONCRETE SURFACE COURSE, TYPE S9.5B, AT AN AVERAGE RATE OF 168 LBS. PER SQ. YD.	R5	2′-6″ CONCRETE CURB AND GUTTER.
C3	PROP. APPROX. 2½″ ASPHALT CONCRETE SURFACE COURSE, TYPE SF9.5A, AT AN AVERAGE RATE OF 137.5 LBS. PER SQ. YD. IN EACH OF TWO LAYERS.	R6	1′-6″ CONCRETE CURB AND GUTTER.
C4	PROP. APPROX. 3″ ASPHALT CONCRETE SURFACE COURSE, TYPE S9.5B, AT AN AVERAGE RATE OF 168 LBS. PER SQ. YD. IN EACH OF TWO LAYERS.	T	EARTH MATERIAL.
C5A	PROP. APPROX. 1.5″ ASPHALT CONCRETE SURFACE COURSE, TYPE S9.5C, AT AN AVERAGE RATE OF 168 LBS. PER SQ. YD.	U	EXISTING PAVEMENT.
C5	PROP. APPROX. 3″ ASPHALT CONCRETE SURFACE COURSE, TYPE S9.5C, AT AN AVERAGE RATE OF 168 LBS. PER SQ. YD. IN EACH OF TWO LAYERS.	V	MILLING 2.5″.
C6	PROP. VAR. DEPTH ASPHALT CONCRETE SURFACE COURSE, TYPE SF9.5A, AT AN AVERAGE RATE OF 110 LBS. PER SQ. YD. PER 1″ DEPTH. TO BE PLACED IN LAYERS NOT TO EXCEED 1½″ IN DEPTH.	W	VARIABLE DEPTH ASPHALT PAVEMENT. (SEE WEDGING DETAIL)
C7	PROP. VAR. DEPTH ASPHALT CONCRETE SURFACE COURSE, TYPE S9.5B, AT AN AVERAGE RATE OF 112 LBS. PER SQ. YD. PER 1″ DEPTH. TO BE PLACED IN LAYERS NOT TO EXCEED 2″ IN DEPTH.		
C8	PROP. VAR. DEPTH ASPHALT CONCRETE SURFACE COURSE, TYPE S9.5C, AT AN AVERAGE RATE OF 112 LBS. PER SQ. YD. PER 1″ DEPTH. TO BE PLACED IN LAYERS NOT TO EXCEED 2″ IN DEPTH.		
D1A	PROP. APPROX. 2.5″ ASPHALT CONCRETE INTERMEDIATE COURSE, TYPE I19.0C, AT AN AVERAGE RATE OF 285 LBS. PER SQ. YD.		
D1	PROP. APPROX. 4″ ASPHALT CONCRETE INTERMEDIATE COURSE, TYPE I19.0C, AT AN AVERAGE RATE OF 456 LBS. PER SQ. YD.		
D2	PROP. VAR. DEPTH ASPHALT CONCRETE INTERMEDIATE COURSE, TYPE I19.0C, AT AN AVERAGE RATE OF 114 LBS. PER SQ. YD. PER 1″ DEPTH, TO BE PLACED IN LAYERS NOT LESS THAN 2½″ IN DEPTH OR GREATER THAN 4″ IN DEPTH.		
E1	PROP. APPROX. 4″ ASPHALT CONCRETE BASE COURSE, TYPE B25.0B, AT AN AVERAGE RATE OF 456 LBS. PER SQ. YD.		
E2	PROP. APPROX. 4½″ ASPHALT CONCRETE BASE COURSE, TYPE B25.0B, AT AN AVERAGE RATE OF 513 LBS. PER SQ. YD.		
E3	PROP. APPROX. 5½″ ASPHALT CONCRETE BASE COURSE, TYPE B25.0B, AT AN AVERAGE RATE OF 627 LBS. PER SQ. YD.		
E4	PROP. APPROX. 3″ ASPHALT CONCRETE BASE COURSE, TYPE B25.0C, AT AN AVERAGE RATE OF 342 LBS. PER SQ. YD.		
E4A	PROP. APPROX. 5″ ASPHALT CONCRETE BASE COURSE, TYPE B25.0C, AT AN AVERAGE RATE OF 570 LBS. PER SQ. YD.		
E5	PROP. APPROX. 5½″ ASPHALT CONCRETE BASE COURSE, TYPE B25.0C, AT AN AVERAGE RATE OF 627 LBS. PER SQ. YD.		
E6	PROP. VAR. DEPTH ASPHALT CONCRETE BASE COURSE, TYPE B25.0B, AT AN AVERAGE RATE OF 114 LBS. PER SQ. YD. PER 1″ DEPTH. TO BE PLACED IN LAYERS NOT LESS THAN 3″ IN DEPTH OR GREATER THAN 5½″ IN DEPTH.		
E7	PROP. VAR. DEPTH ASPHALT CONCRETE BASE COURSE, TYPE B25.0C, AT AN AVERAGE RATE OF 114 LBS. PER SQ. YD. PER 1″ DEPTH. TO BE PLACED IN LAYERS NOT LESS THAN 3″ IN DEPTH OR GREATER THAN 5½″ IN DEPTH.		
J1	PROP. 8″ AGGREGATE BASE COURSE.		
K	BASE TO BE TREATED WITH LIME TO A DEPTH OF 8″, AT A RATE OF 20 LBS. PER SQ. YD. AS DIRECTED BY THE ENGINEER. OR BASE TO BE TREATED WITH CEMENT TO A DEPTH OF 7″, AT A RATE OF 55 LBS. PER SQ. YD. AS DIRECTED BY THE ENGINEER.		
N	GEOTEXTILE FOR PAVEMENT STABILIZATION		
P	PRIME COAT AT THE RATE OF 0.35 GAL. PER SQ. YD.		
R1	2′-9″ CONCRETE CURB AND GUTTER.		
R2	CONCRETE EXPRESSWAY GUTTER.		
R3	SHOULDER BERM GUTTER.		

ALTERNATE PAVEMENT DESIGN

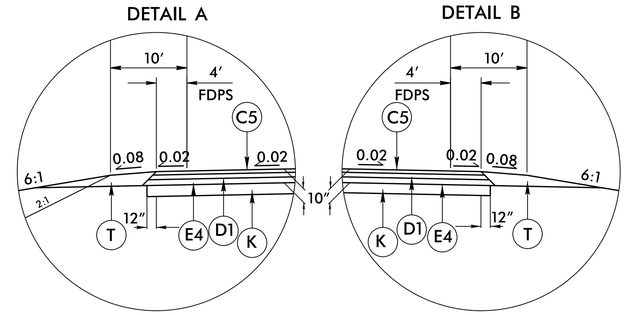

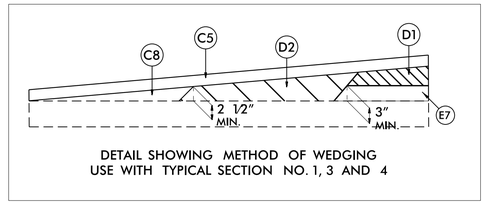

DETAIL SHOWING METHOD OF WEDGING
USE WITH TYPICAL SECTION NO. 1, 3 AND 4

NOTE: PAVEMENT EDGE SLOPES ARE 1:1 UNLESS SHOWN OTHERWISE.

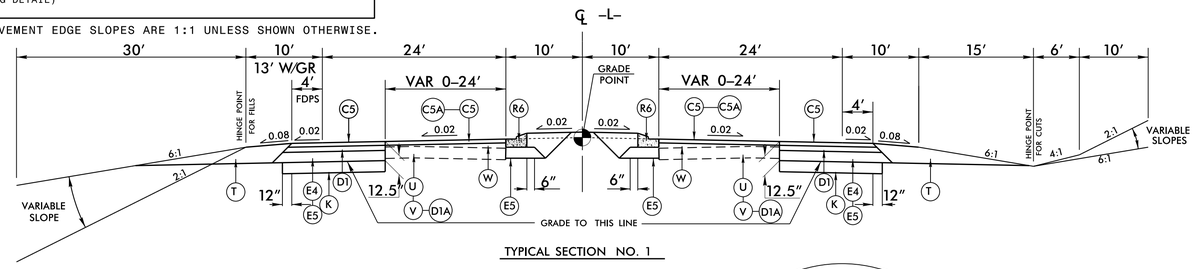

TYPICAL SECTION NO. 1

USE TYPICAL SECTION NO. 1

–L– STA. 13+49.10 TO –L– STA. 22+50.00
–L– STA. 140+00.00 TO –L– STA. 141+00.00
–L– STA. 155+50.00 TO –L– STA. 156+00.00
–L– STA. 305+00.00 TO –L– STA. 307+00.00
–L– STA. 354+50.00 TO –L– STA. 356+50.00
–L– STA. 394+00.00 TO –L– STA. 395+00.00
–L– STA. 417+00.00 TO –L– STA. 430+34.01

NOTE: USE C5 IN YANCEY COUNTY
USE C5A IN MITCHELL COUNTY

FOR WIDENING 6′ OR LESS,
USE E5 INTSEAD OF E4

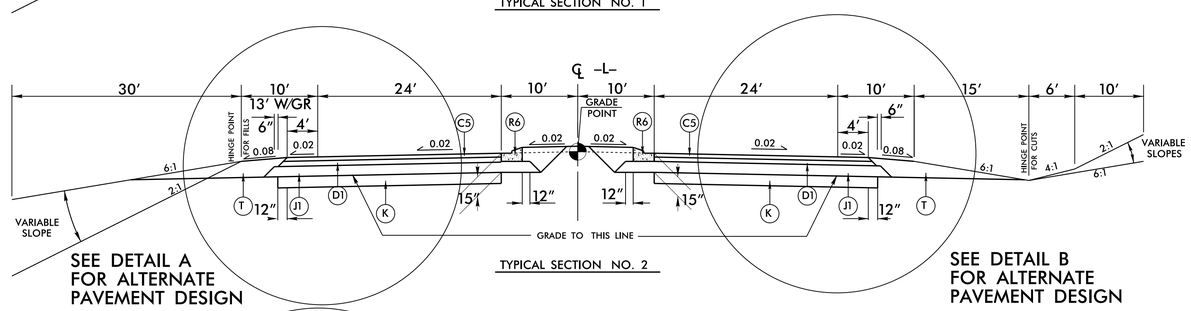

TYPICAL SECTION NO. 2

USE TYPICAL SECTION NO. 2

–L– STA. 22+50.00 TO –L– STA. 23+48.85 (BEGIN BRIDGE)
–L– STA. 24+82.40 (END BRIDGE) TO –L– STA. 26+00.00
–L– STA. 72+50.00 TO –L– STA. 88+50.00
–L– STA. 114+00.00 TO –L– STA. 120+65.00 (BEGIN BRIDGE)
–L– STA. 123+80.00 (END BRIDGE) TO –L– STA. 131+00.00
–L– STA. 144+50.00 TO –L– STA. 148+50.00
–L– STA. 204+00.00 TO –L– STA. 208+00.00
–L– STA. 239+50.00 TO –L– STA. 247+00.77 (BEGIN BRIDGE)
–L– STA. 248+85.77 (END BRIDGE) TO –L– STA. 254+00.00
–L– STA. 262+50.00 TO –L– STA. 266+00.00
–L– STA. 278+00.00 TO –L– STA. 279+50.00
–L– STA. 364+50.00 TO –L– STA. 391+75.00

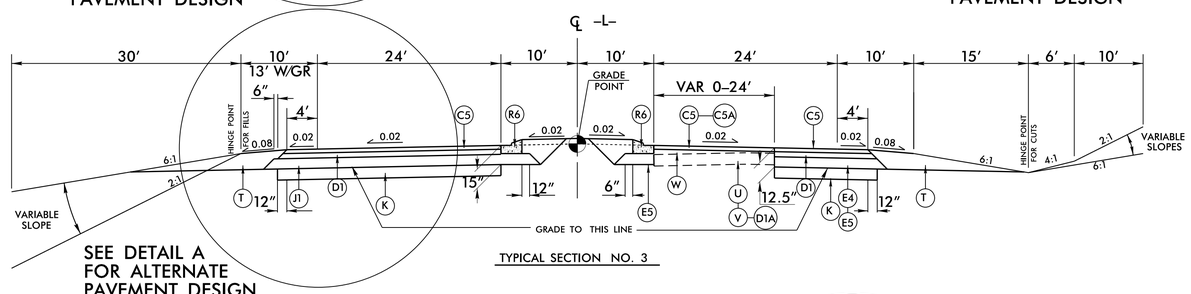

TYPICAL SECTION NO. 3

USE TYPICAL SECTION NO. 3

–L– STA. 26+00.00 TO –L– STA. 52+50.00
–L– STA. 141+00.00 TO –L– STA. 144+50.00
–L– STA. 148+50.00 TO –L– STA. 155+50.00
–L– STA. 208+00.00 TO –L– STA. 239+50.00
–L– STA. 254+00.00 TO –L– STA. 262+50.00
–L– STA. 266+00.00 TO –L– STA. 278+00.00
–L– STA. 279+50.00 TO –L– STA. 305+00.00
–L– STA. 356+50.00 TO –L– STA. 364+50.00
–L– STA. 391+75.00 TO –L– STA. 394+00.00

NOTE: FOR WIDENING 6′ OR LESS,
USE E5 INTSEAD OF E4

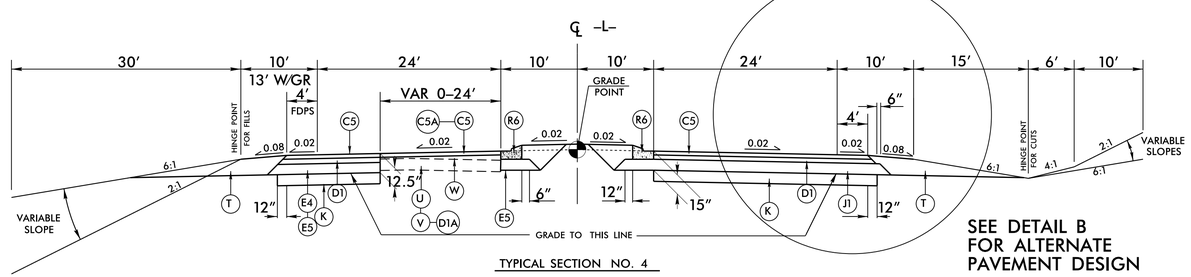

TYPICAL SECTION NO. 4

USE TYPICAL SECTION NO. 4

–L– STA. 52+50.00 TO –L– STA. 72+50.00
–L– STA. 88+50.00 TO –L– STA. 114+00.00
–L– STA. 131+00.00 TO –L– STA. 140+00.00
–L– STA. 156+00.00 TO –L– STA. 204+00.00
–L– STA. 307+00.00 TO –L– STA. 354+00.00
–L– STA. 395+00.00 TO –L– STA. 417+00.00

NOTE: FOR WIDENING 6′ OR LESS,
USE E5 INTSEAD OF E4

6/2/99

04-SEP-2014 09:57
f:\roadway\pre\r2519b_rdy_typ.dgn
$$$$USERNAME$$$$