PROJECT REFERENCE NO.	SHEET NO.
R-2519B	2C-11

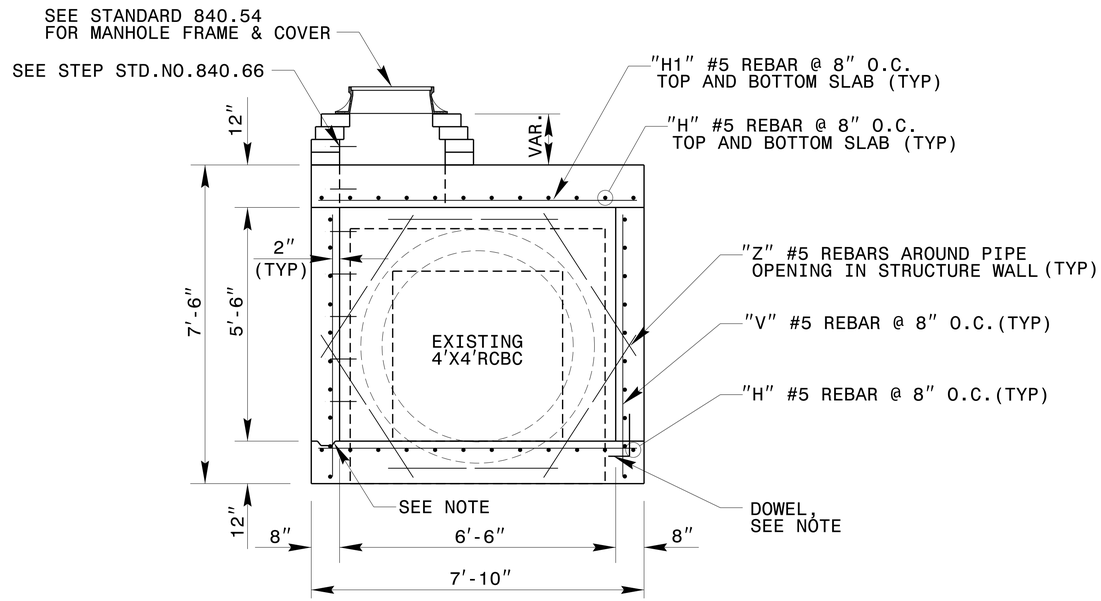

SECTION A-A

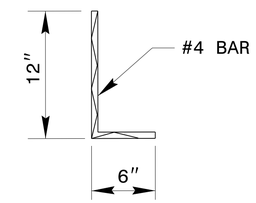

DOWEL

GENERAL NOTES:

USE CLASS "AA" CONCRETE THROUGHOUT.

PROVIDE ALL JUNCTION BOXES OVER 3'-6" IN DEPTH WITH STEPS 12" ON CENTER. USE STEPS WHICH COMPLY WITH STD. DRAWING 840.66.

OPTIONAL CONSTRUCTION - MONOLITHIC POUR, 2" KEYWAY, OR #4 BAR DOWELS AT 12" CENTERS AS DIRECTED BY THE ENGINEER.

USE FORMS FOR THE CONSTRUCTION OF THE BOTTOM SLAB.

INSTALL MANHOLE IN POSITION AS DIRECTED BY THE ENGINEER. CUT AND BEND ALL REBAR CROSSING THIS OPENING TO ALLOW 2" MINIMUM CONCRETE COVERAGE.

CHAMFER ALL EXPOSED CORNERS 1".

2" MINIMUM CONCRETE COVERAGE ON ALL REBAR.

IF REINFORCED CONCRETE PIPE IS SET IN BASE SLAB OR BOX, ADD TO BASE AS SHOWN IN STD. NO. 840.00.

MAKE ALL ADJUSTMENTS AS DIRECTED BY THE ENGINEER

FIELD VERIFY THE DIMENSIONS FOR THE EXISTING 4'X4' RCBC

BILL OF MATERIALS

BAR	NO.	SIZE	LENGTH	WEIGHT
H	44	#5	5'-0"	230
H1	25	#5	7'-6"	196
V	26	#5	6'-2"	168
Z	6	#5	4'-0"	25
DOWEL	36	#4	1'-6"	36
TOTAL REINF. STEEL (LBS.)				655
TOTAL CONC. (CU. YDS.)				6.3

* 0.30 CU. YD. PER FOOT OF RISER HEIGHT
* 0.73 CU. YD. DEDUCTION FOR 1-60" RC PIPE
* 0.90 CU. YD. DEDUCTION FOR 4'x4' RCBC
* NO DEDUCTION HAS BEEN MADE FOR PIPE OR CULVERT

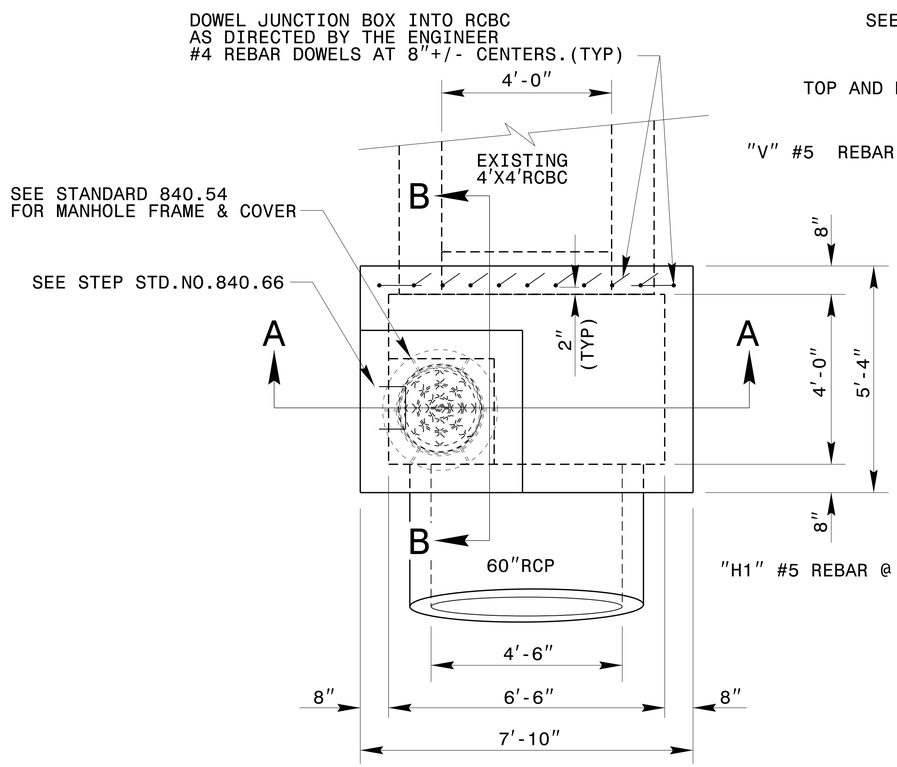

PLAN VIEW

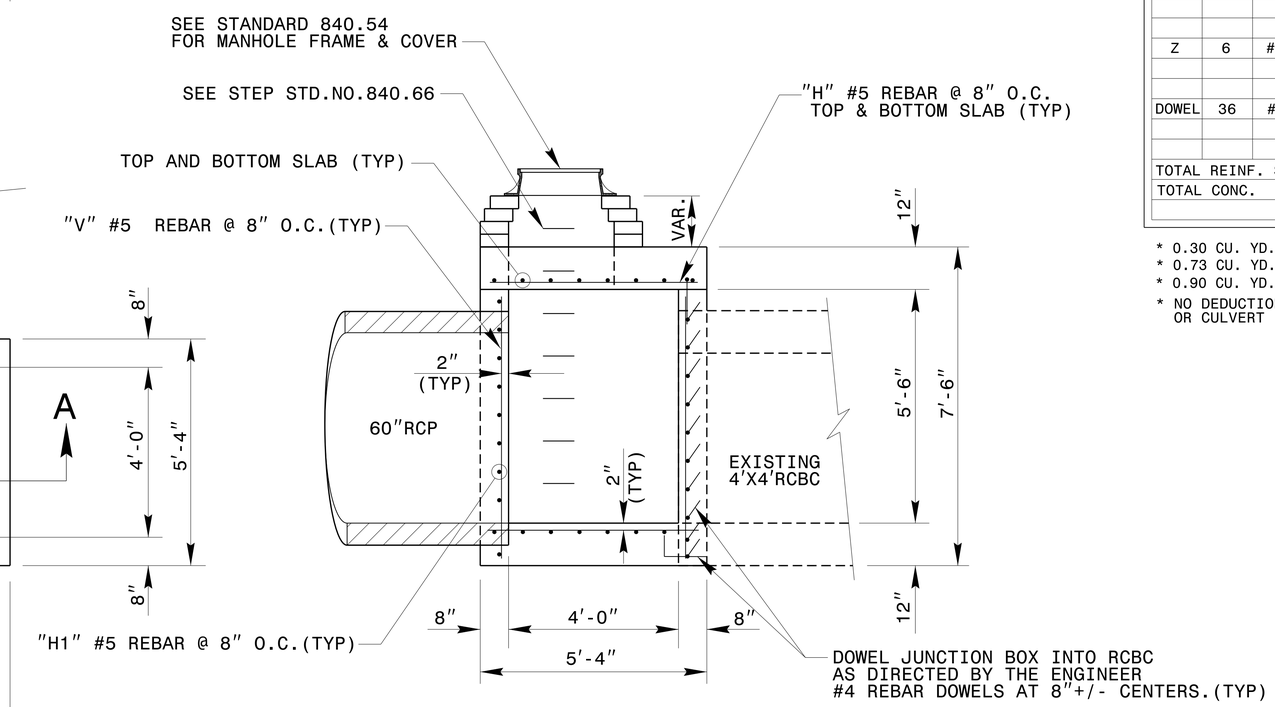

SECTION B-B

STR. #939

CONTRACT STANDARDS & DEVELOPMENT UNIT
STANDARDS AND SPECIAL DESIGN
Office 919-250-4128 FAX 919-250-4119

TRAFFIC BEARING JUNCTION BOX FOR EXISTING 4'X4'RCBC AND PROPOSED 60"RCP

NORTH CAROLINA PROFESSIONAL SEAL 022966 ENGINEER Joel S. Howerton

DocuSigned by: Joel Howerton 9/5/2014
873F3D17DCDC45F...

ORIGINAL BY: DATE:
MODIFIED BY: nbritt DATE: 12/22/09
CHECKED BY: DATE:
FILE SPEC.: detail/nbritt/english/rural/r2233aa 4x4culv54tbjb.dgn

5/14/99

$$$$SYSTIME$$$$
$$$$TIME$$$$
$$$$DGN$$$$
$$$$USERNAME$$$$