DocuSign Envelope ID: 42960BAE-D46D-4A8E-959B-EA87100C30DF

TIP NO.	SHEET NO.
U-3465	PMP-12

APPROVED: DocuSigned by: William J. Hamilton, PE A0560D704648484...

DATE: 9/25/2014

SEAL

NORTH CAROLINA PROFESSIONAL SEAL 32396 ENGINEER WILLIAM J. HAMILTON

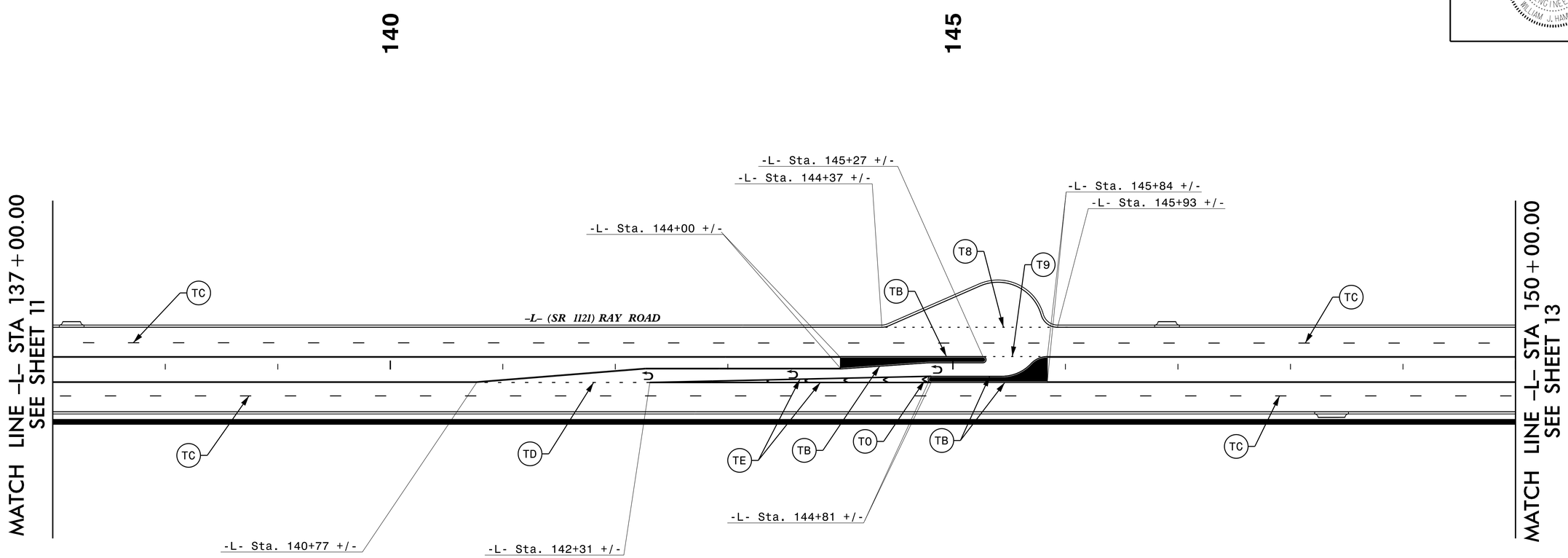

SYMBOL LEGEND

UT U-TURN ARROW

Prepared In the offices of:

RAMEY KEMP & ASSOCIATES, INC.
Transportation Engineers
5808 Farrington Place, Suite 100
Raleigh, North Carolina 27609
919-872-5115 Tel. 919-878-0416 Fax.
www.rameykemp.com

PAVEMENT MARKING DETAIL