PROJECT REFERENCE NO.	SHEET NO.
R-5523	UC-3E
DESIGNED BY: HC	
DRAWN BY: HC	
CHECKED BY: HC	
APPROVED BY:	
REVISED:	

SUMMIT
504 Meadowlands Drive
Hillsborough, NC 27278
(919) 732-3883
(919) 732-6676 (FAX)

NORTH CAROLINA PROFESSIONAL SEAL 23100 ENGINEER TRACY NEAL PARROTT
9/5/2014
UTILITY CONSTRUCTION PLANS ONLY

UTILITY CONSTRUCTION

HARNETT COUNTY
DEPARTMENT OF PUBLIC UTILITIES
TYPICAL WATER DETAILS

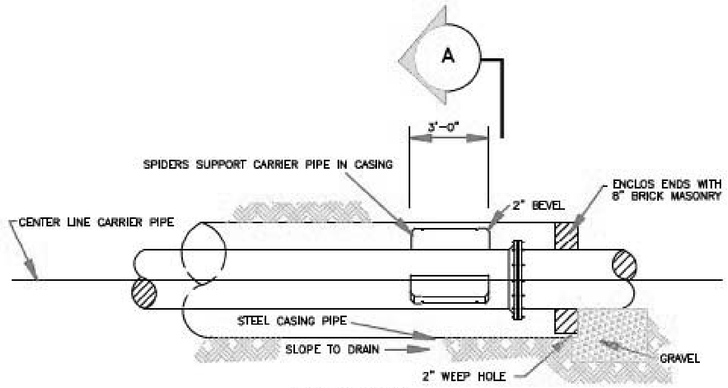

ELEVATION

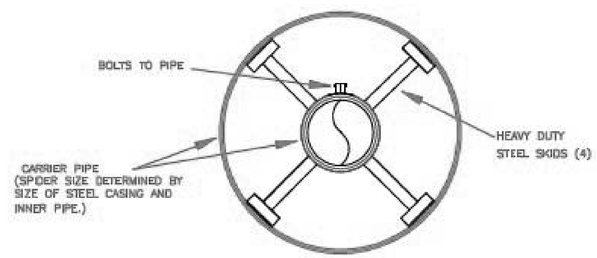

SECTION "A"

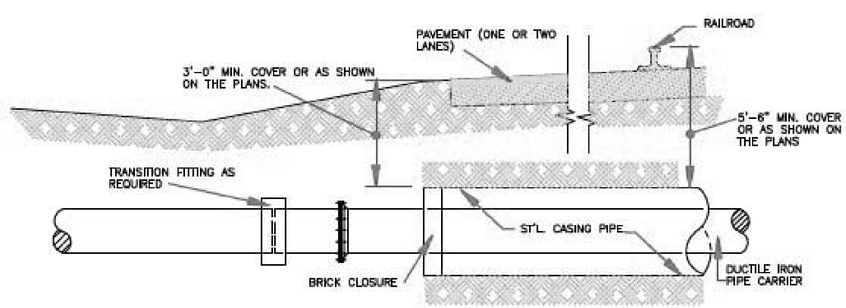

PROFILE

TYPICAL BORING & JACKING DETAIL — W 8

NO SCALE

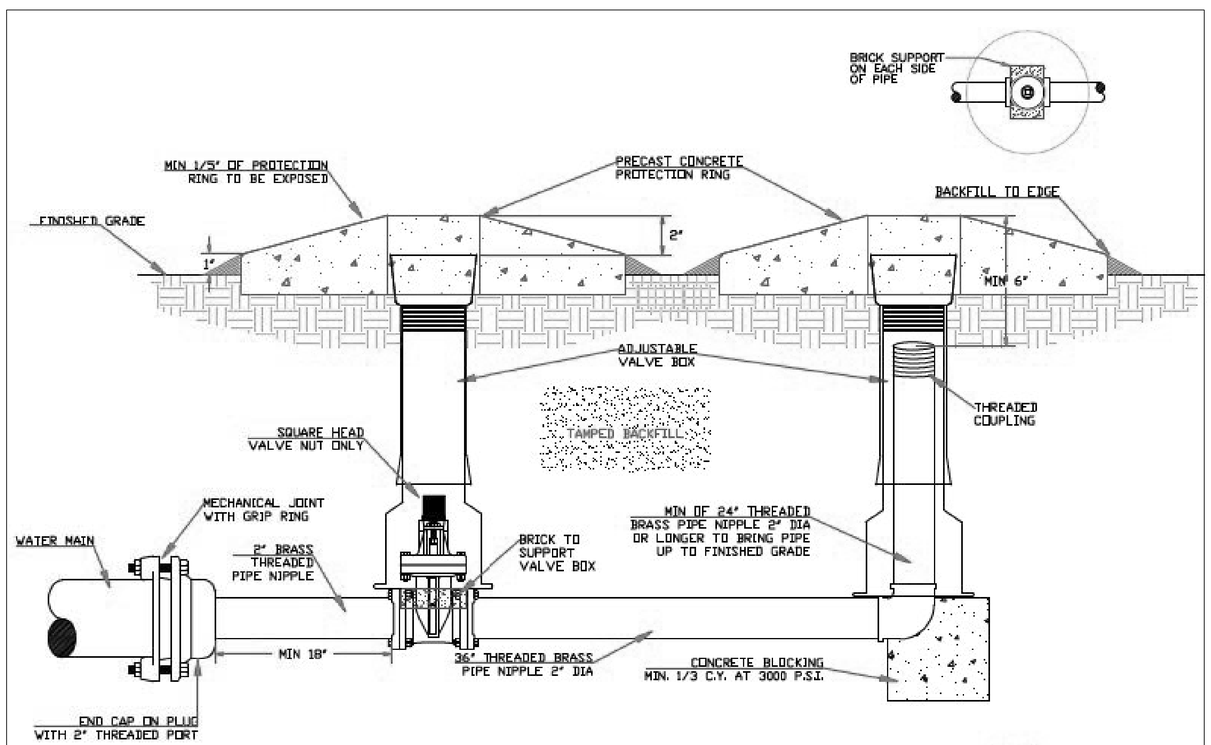

TYPICAL PERMANENT BLOW-OFF ASSEMBLY DETAIL — W 4

NO SCALE

NOTE: SEE TYPICAL VALVE BOX DETAIL FOR BRICK INSTALLATION

05-SEP-2014 15:13
R5523_UC_dt1_UC3E_psh.dgn
bragg@dot.state.nc.us