HARNETT COUNTY DEPARTMENT OF PUBLIC UTILITIES TYPICAL WATER DETAILS

PROJECT REFERENCE NO.	SHEET NO.
R-5523	UC-3F
DESIGNED BY: HC	
DRAWN BY: HC	
CHECKED BY: HC	
APPROVED BY:	
REVISED:	

SUMMIT
504 Meadowlands Drive
Hillsborough, NC 27278
(919) 732-3883
(919) 732-6676 (FAX)

NORTH CAROLINA PROFESSIONAL SEAL 23100 ENGINEER TRACY NEAL PARROTT

9/5/2014
UTILITY CONSTRUCTION PLANS ONLY

UTILITY CONSTRUCTION

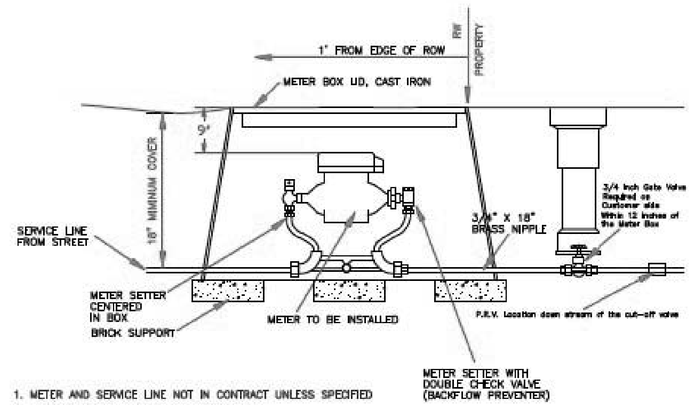

1. METER AND SERVICE LINE NOT IN CONTRACT UNLESS SPECIFIED
2. INCLUDE STONE IN PRICE OF METER BOX.
3. METER SETTER SIZE AS NOTED ON PLANS.
4. ALL BRASS FITTINGS SHALL BE COMPRESSION TYPE.

TYPICAL 3/4" METER SETTER INSTALLATION DETAIL — W 14

NO SCALE

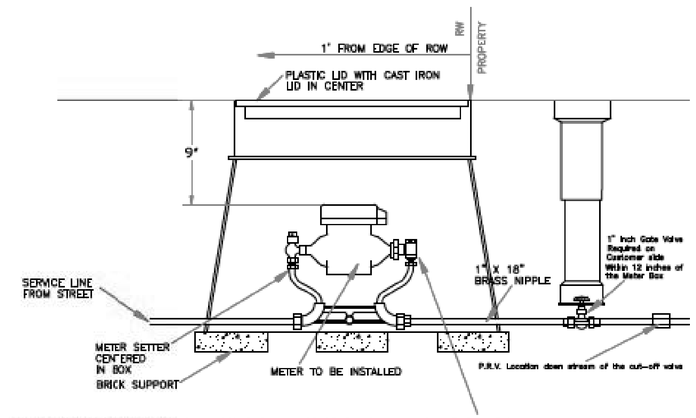

1. METER AND SERVICE LINE NOT IN CONTRACT UNLESS SPECIFIED
2. INCLUDE STONE IN PRICE OF METER BOX.
3. METER SETTER SIZE AS NOTED ON PLANS.
4. ALL BRASS FITTINGS SHALL BE COMPRESSION TYPE.

TYPICAL 1" METER SETTER INSTALLATION DETAIL — W 16

NO SCALE

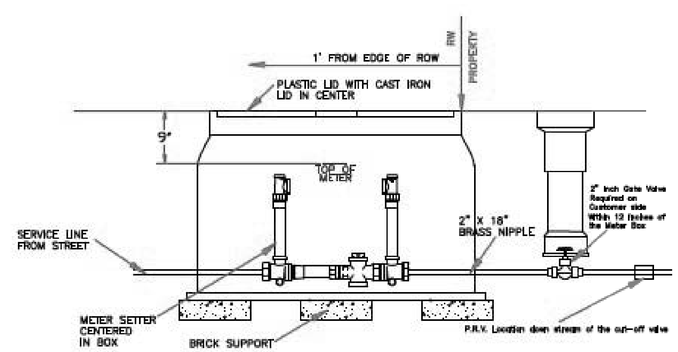

1. METER AND SERVICE LINE NOT IN CONTRACT UNLESS SPECIFIED
2. INCLUDE STONE IN PRICE OF METER BOX.
3. METER SETTER SIZE AS NOTED ON PLANS.
4. ALL BRASS FITTINGS SHALL BE COMPRESSION TYPE.

TYPICAL 1/2" METER SETTER INSTALLATION DETAIL — W 18

NO SCALE

5/14/99
05-SEP-2014 15:13
h:\projects\R5523\dtl\UC3F_psh.dgn