HARNETT COUNTY DEPARTMENT OF PUBLIC UTILITIES TYPICAL WATER DETAILS

PROJECT REFERENCE NO.	SHEET NO.
R-5523	UC-3G
DESIGNED BY: HC	
DRAWN BY: HC	
CHECKED BY: HC	
APPROVED BY:	
REVISED:	

SUMMIT DESIGN AND ENGINEERING SERVICES
504 Meadowlands Drive
Hillsborough, NC 27278
(919) 732-3883
(919) 732-6676 (FAX)

NORTH CAROLINA PROFESSIONAL SEAL 23100 ENGINEER TRACY NEAL PARROTT
9/5/2014

UTILITY CONSTRUCTION PLANS ONLY

UTILITY CONSTRUCTION

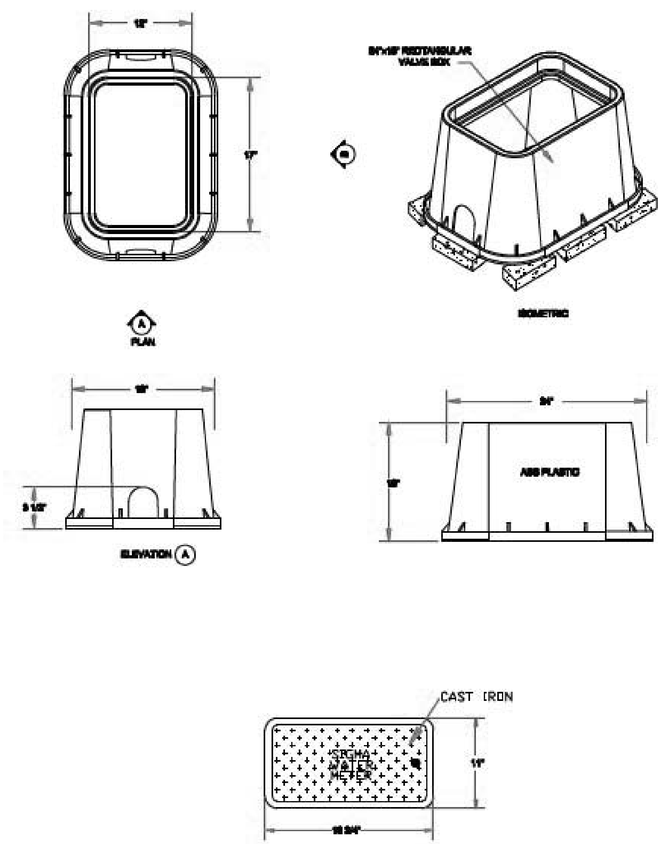

TYPICAL METER BOX DETAIL FOR 3/4" SERVICE (W 15)
NO SCALE

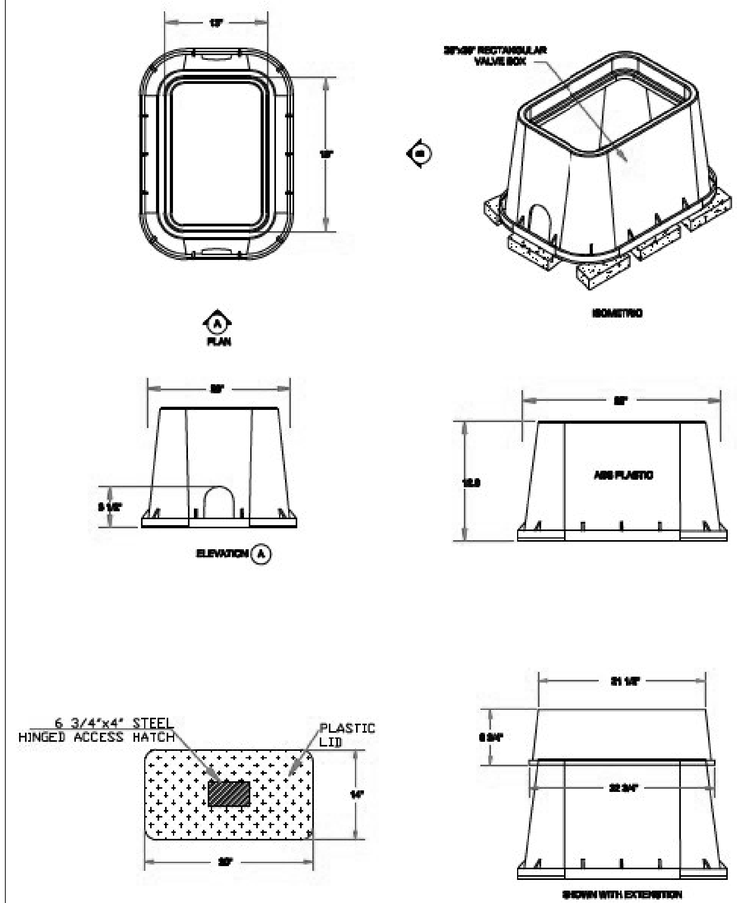

TYPICAL METER BOX DETAIL FOR 1" SERVICE (W 17)
NO SCALE

05-SEP-2014 15:14
R-5523_Uc_dtl_UC3G_psh.dgn