PROJECT REFERENCE NO.	SHEET NO.
R-5523	UC-3D
DESIGNED BY: HC	
DRAWN BY: HC	
CHECKED BY: HC	
APPROVED BY:	
REVISED:	

SUMMIT
504 Meadowlands Drive
Hillsborough, NC 27278
(919) 732-3883
(919) 732-6676 (FAX)

NORTH CAROLINA PROFESSIONAL SEAL 23100 ENGINEER TRACY NEAL PARROTT
9/5/2014
UTILITY CONSTRUCTION PLANS ONLY

HARNETT COUNTY
DEPARTMENT OF PUBLIC UTILITIES
TYPICAL WATER DETAILS

UTILITY CONSTRUCTION

NOTES:
1. INSTALL METER AT R/W
2. "TWO (2)-3/4" SERVICE LINES MUST BE INSTALLED INSIDE A 2" SLEEVE."
3. "TWO (2)-1" SERVICE LINES MUST BE INSTALLED INSIDE A 3" SLEEVE."
4. SLEEVES SHOULD BE SCHEDULE 40 PVC PIPE.
5. SEE DETAIL FOR SERVICE MATERIAL AND METER SETTING
6. SERVICE LINE SHALL BE 3' BELOW FINISHED GRADE OF DITCHES.
7. CONDUIT MUST EXTEND PAST PREPOSED SIDEWALK.

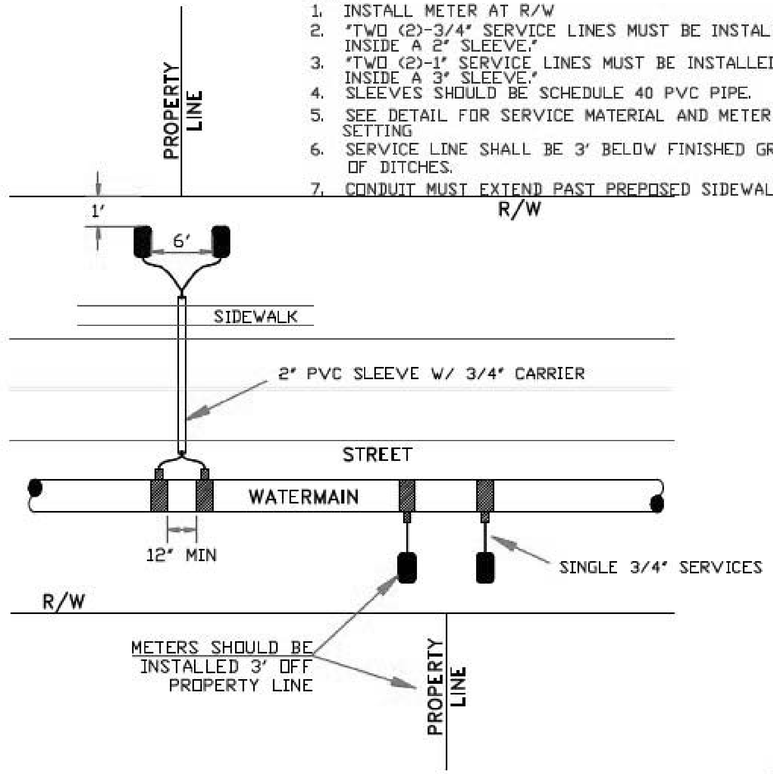

TYPICAL DOMESTIC WATER SERVICE INSTALLATION DETAIL (W 12)
NO SCALE

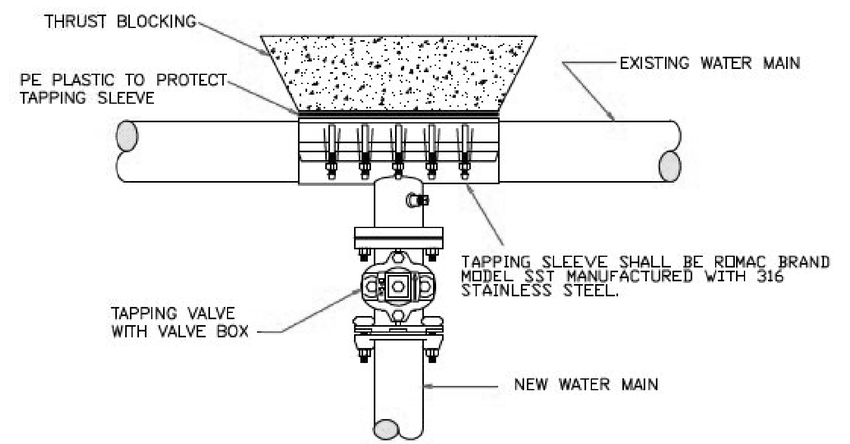

TYPICAL TAPPING SLEEVE AND VALVE ASSEMBLY DETAIL (W 5)
NO SCALE

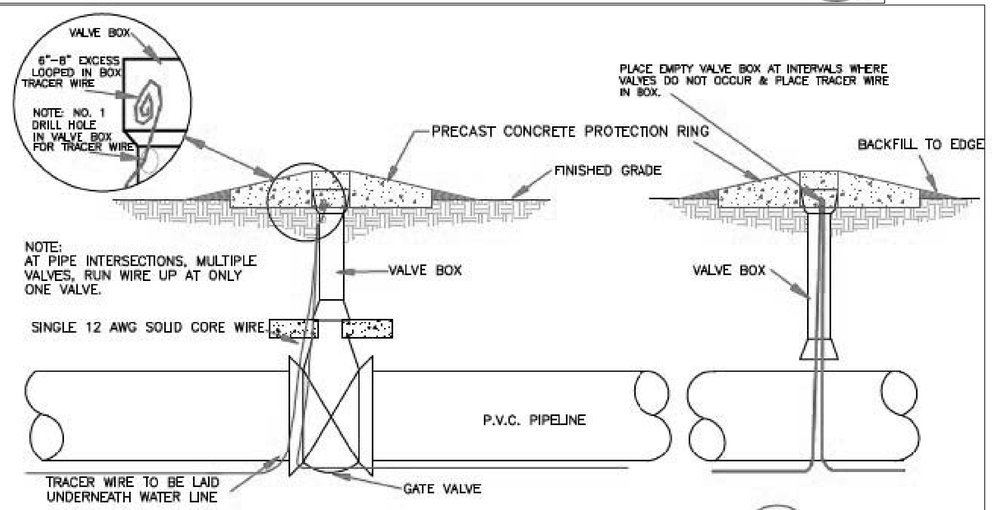

TYPICAL TRACER WIRE INSTALLATION DETAIL (W 3)
NO SCALE

NOTES:
1. DRILL HOLE IN VALVE BOX TO INSERT TRACER WIRE,BRING UP TO INSIDE AND ROLL UP AT LEAST 6"-8" EXCESS
2. PLACE TRACER WIRE IN VALVE BOX AT 1,000" INTERVALS OR AS NOTED ON THE PLANS, TYPICAL.
3. DO NOT SPLICE WIRE WHEN BEGINNING A NEW SPOOL. INSTEAD INSTALL A VALVE BOX AND ATTACH EACH WIRE WITH A BRASS SCREW TO THE VALVE BOX.

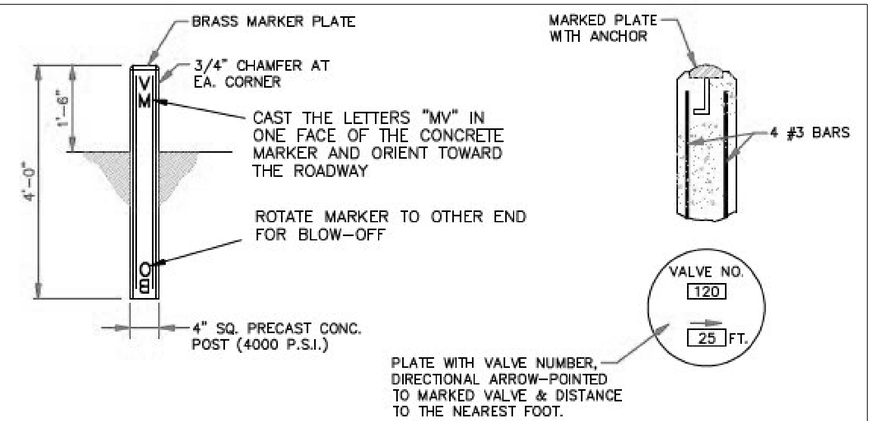

TYPICAL VALVE MARKER DETAIL (W 1)
NO SCALE

NOTES:
PAINT MARKER BLUE AFTER INSTALLATION

5/14/99

05-SEP-2014 15:13
R5523_UC_dtl_UC30_psh.dgn