DocuSign Envelope ID: E761A7C5-160B-4E32-BDF1-8724540FEEE9

5/14/99

PROJECT REFERENCE NO.	SHEET NO.
R-5523	2-D

NOTES: LOCATE THE APPROACH END OF THE ISLAND (MOUNTABLE SECTION) A MINIMUM OF 100' FROM THE GATE ARM.

PAINT THE MOUNTABLE SECTION OF THE ISLAND YELLOW; THERMOPLASTIC PREFERRED.

SEE R.S.D. 852.01 FOR ADDITIONAL NOTES

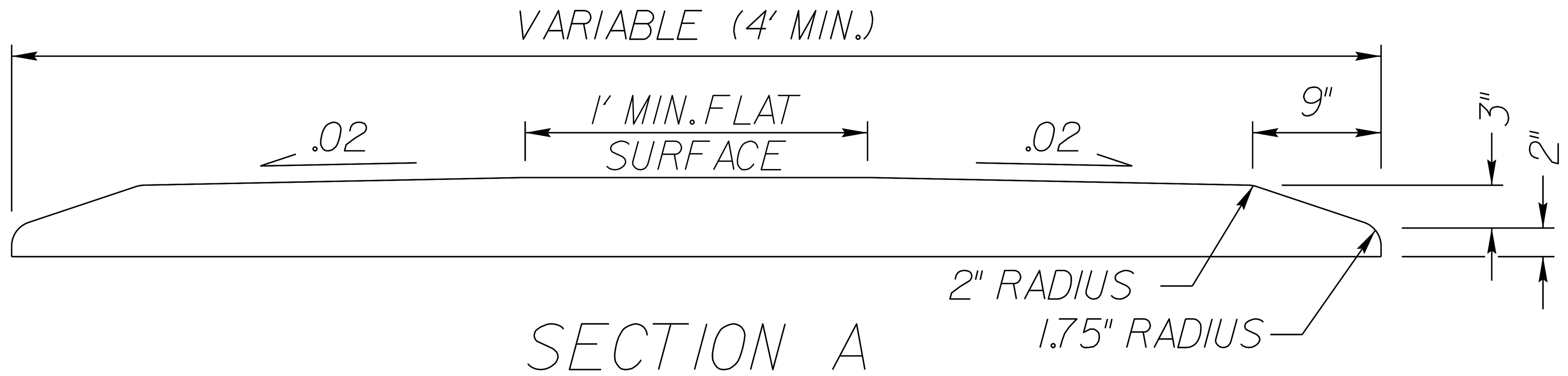

SECTION A

MOUNTABLE 5" MONOLITHIC CONCRETE ISLAND

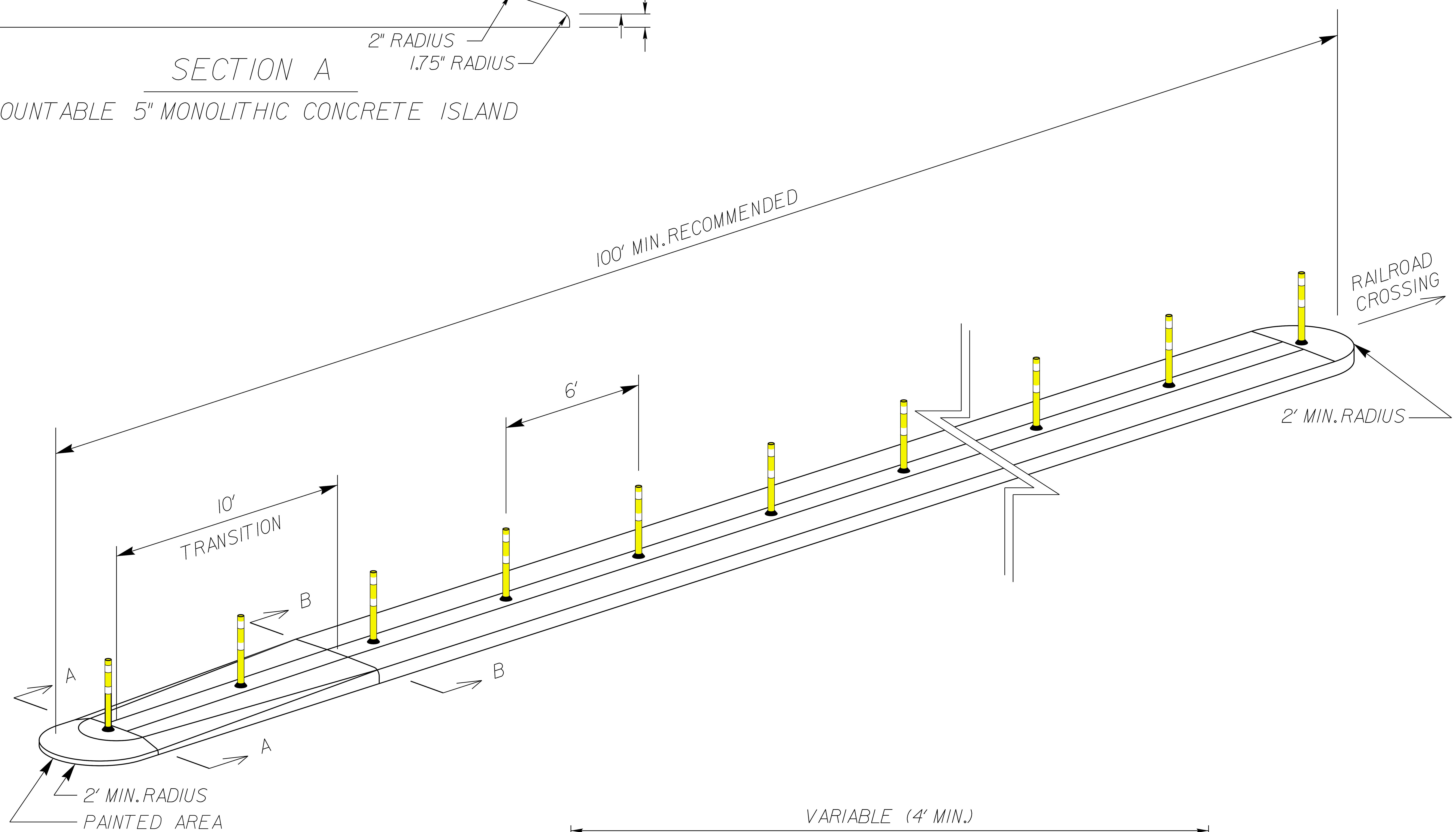

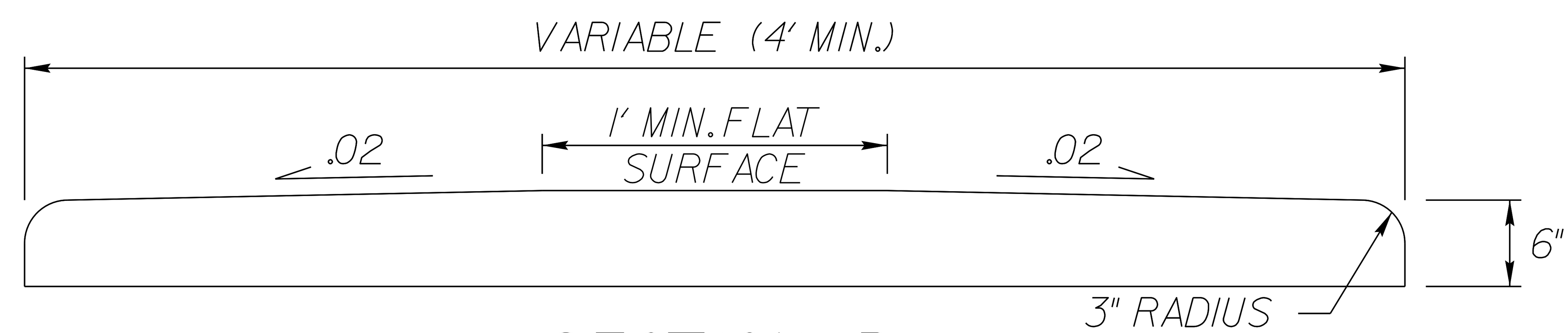

SECTION B

NON-MOUNTABLE 6" MONOLITHIC CONCRETE ISLAND

NORTH CAROLINA PROFESSIONAL SEAL 022966 ENGINEER Joel S. Howerton

DocuSigned by: Joel Howerton 873F3D17DCDC45F...

CONTRACT STANDARDS AND DEVELOPMENT UNIT
Office 919-707-6950 FAX 919-250-4119

CONCRETE ISLAND DETAIL

ORIGINAL BY: KKempf DATE: 5-15-09
MODIFIED BY: DATE:
CHECKED BY: DATE:
FILE SPEC: s:/jhowerton/Non Mountable Concrete Island.dgn

$$$$$$SYSTIME$$$$$ $$$$$$$$$$$DGN$$$$$$$$$$$$$$$$ $$$$USERNAME$$$$