DocuSign Envelope ID: 217C51D8-B29C-402C-BE1B-9121E7964063

8/17/99

REVISIONS

LOCHNER
H. W. LOCHNER, INC.
2840 PLAZA PLACE, SUITE 202
RALEIGH, NC 27612
NC License Number F-0159

PROJECT REFERENCE NO.	SHEET NO.
R-5523	2-C
R/W SHEET NO.	

HYDRAULICS ENGINEER

NORTH CAROLINA PROFESSIONAL SEAL 20147 ENGINEER FRANK E. FLEMING 8/5/2014

DocuSigned by:
Frank E. Fleming
653C0C9F5B5F4E8...

COIR FIBER MATTING DETAIL

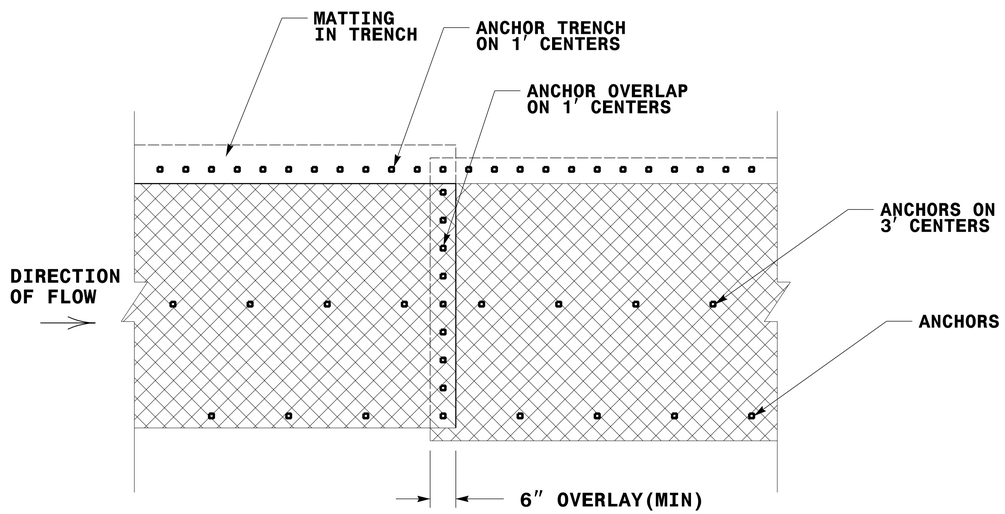

PLAN VIEW

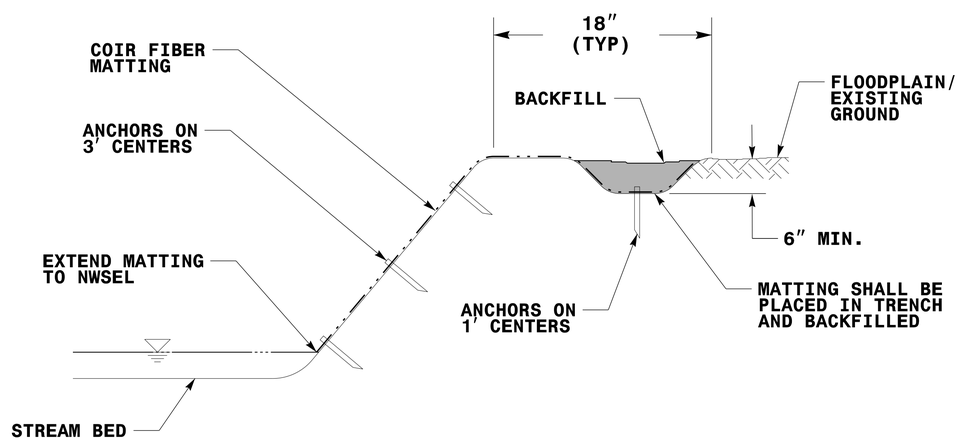

TYPICAL CROSS SECTION

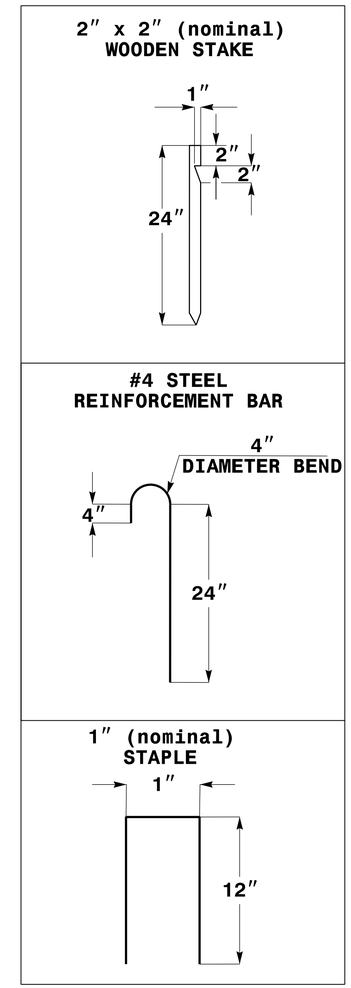

ANCHOR OPTIONS

NOTES:
1) IN AREAS TO BE MATTED, ALL SEEDING, SOIL AMENDMENTS, AND SOIL PREPARATION MUST BE COMPLETED IN ACCORDANCE WITH THE PROJECT SPECIFICATIONS PRIOR TO PLACEMENT OF COIR FIBER MATTING.
2) REBAR OR STAPLES MAY BE USED IN PLACE OF WOODEN STAKES AS DIRECTED BY THE ENGINEER.

COIR FIBER MATTING DETAIL

NOT TO SCALE

SYTIME
R:\Roadway\Proj\R5523_RDY_DETAIL_2-C.dgn
$$$$USERNAME$$$$