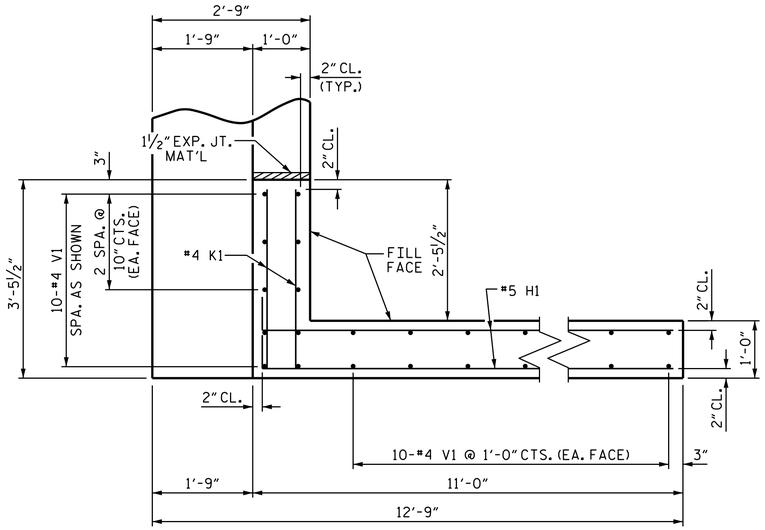

PLAN OF WING (W1)

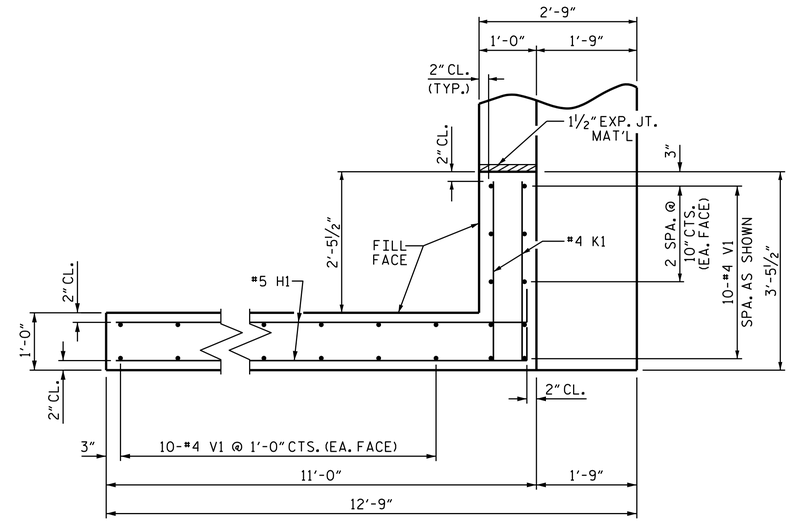

PLAN OF WING (W2)

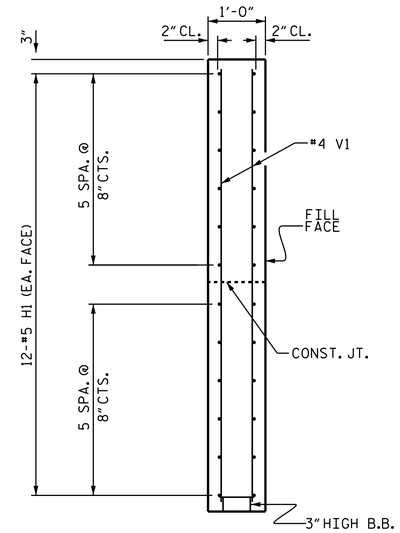

SECTION X-X

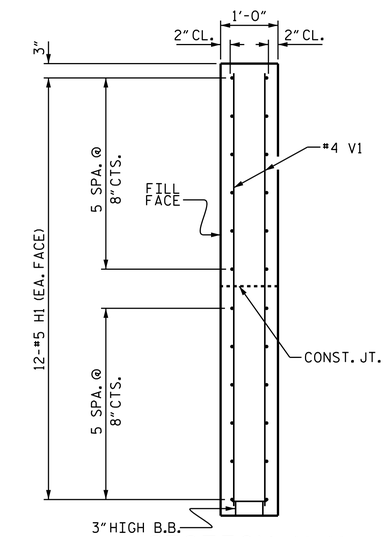

SECTION Y-Y

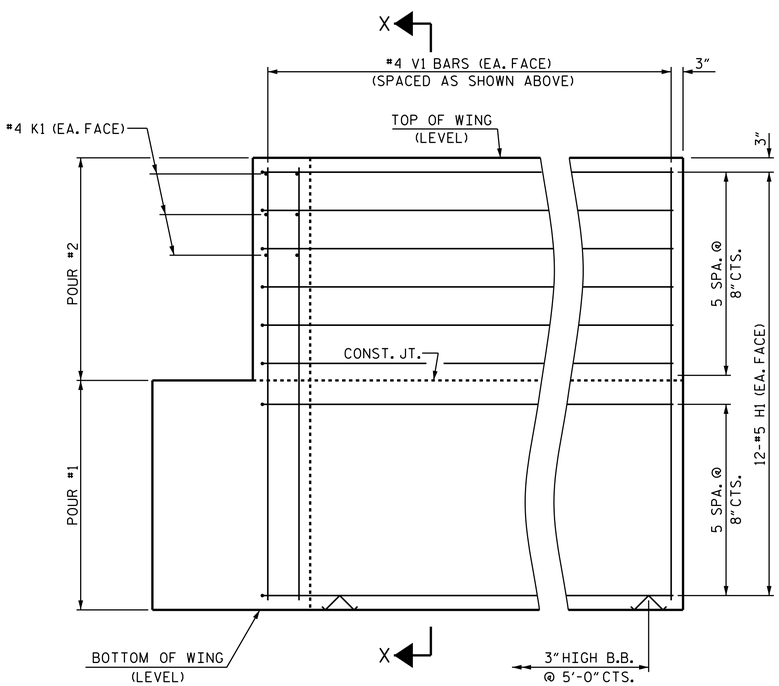

ELEVATION OF WING (W1)

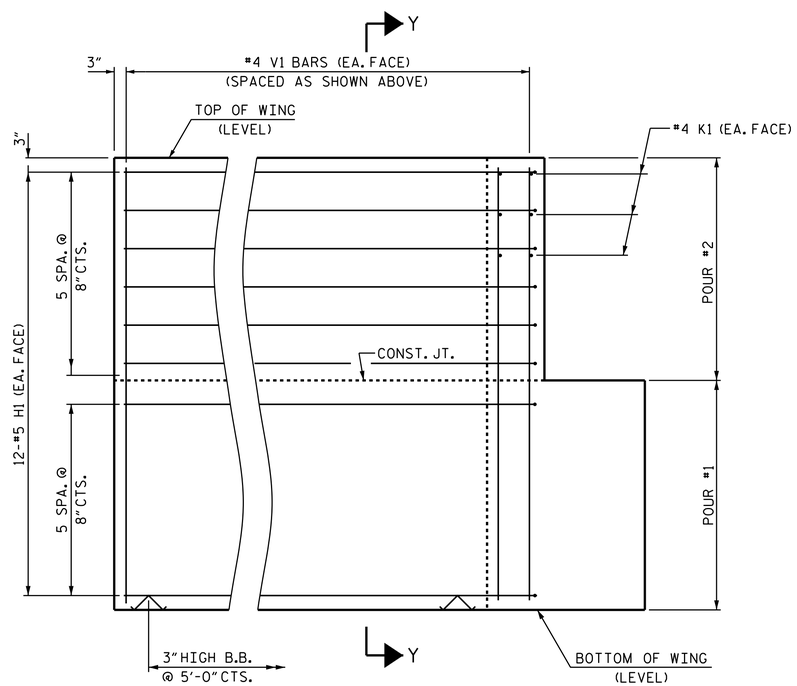

ELEVATION OF WING (W2)

WING DETAILS

PROJECT NO. B-4511

FORSYTH COUNTY

STATION: 18+66.50 -L-

SHEET 3 OF 4

STATE OF NORTH CAROLINA
DEPARTMENT OF TRANSPORTATION
RALEIGH

SUBSTRUCTURE

END BENT
WING DETAILS

NORTH CAROLINA PROFESSIONAL SEAL 031480 ENGINEER DONALD R. SMITH, JR.

DocuSigned by: Donald R. Smith, Jr
EDC877061748490...
8/26/2014

REVISIONS						SHEET NO.
NO.	BY:	DATE:	NO.	BY:	DATE:	S-16
1			3			TOTAL SHEETS
2			4			19

DRAWN BY :	M.E. GILES	DATE :	10/13
CHECKED BY :	J.D.HAWK	DATE :	12/13
DESIGN ENGINEER OF RECORD:	T.H. CARROLL	DATE :	7/8/14

22-AUG-2014 14:07
R:\Structures\Plans\B4511_SD_E*_01.dgn
jdhawk