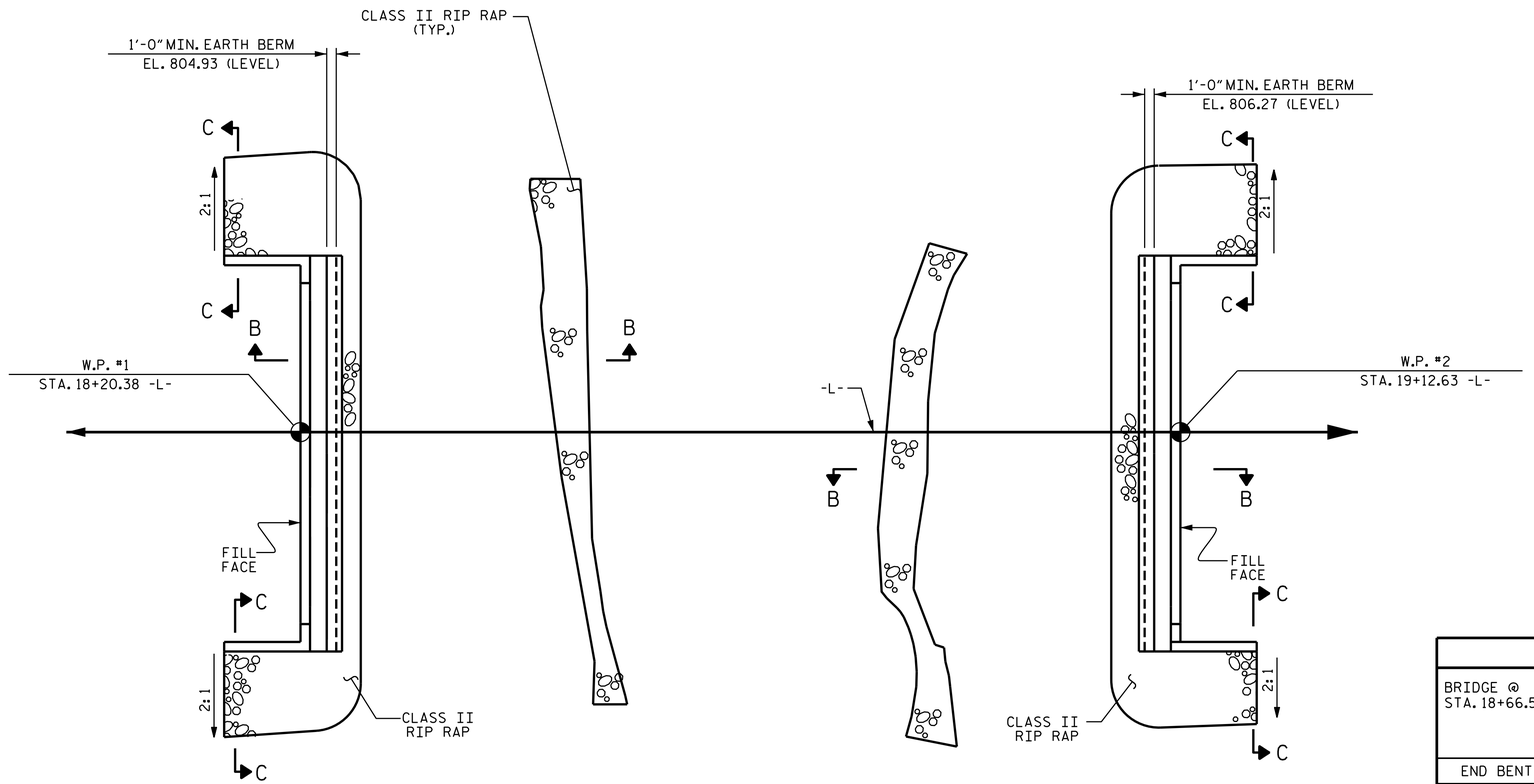

END BENT 1

END BENT 2

PLAN OF RIP RAP

ESTIMATED QUANTITIES		
BRIDGE @ STA. 18+66.50 -L-	RIP RAP CLASS II (2'-0" THICK)	GEOTEXTILE FOR DRAINAGE
	TONS	SQUARE YARDS
END BENT 1	75	85
END BENT 2	75	85
TOTAL	150	170

QUANTITIES INCLUDED FOR BANK STABILIZATION

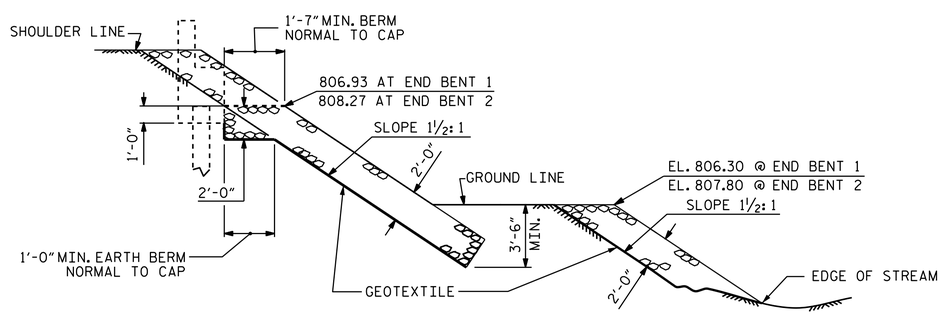

SECTION B-B

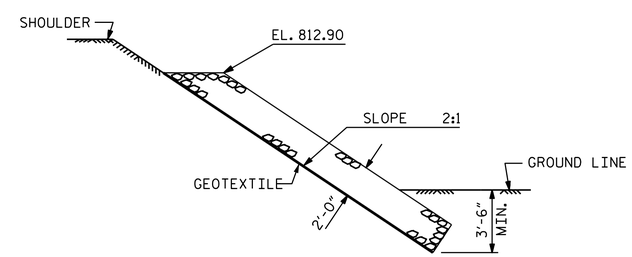

SECTION C-C

PROJECT NO. B-4511

FORSYTH COUNTY

STATION: 18+66.50 -L-

STATE OF NORTH CAROLINA
DEPARTMENT OF TRANSPORTATION
RALEIGH

STANDARD
RIP RAP DETAILS

NORTH CAROLINA PROFESSIONAL SEAL 031480 ENGINEER DONALD R. SMITH, JR.

DocuSigned by: Donald R. Smith, Jr
EDC877061749490
8/26/2014

REVISIONS						SHEET NO.
NO.	BY:	DATE:	NO.	BY:	DATE:	S-18
1			3			TOTAL SHEETS
2			4			19

DRAWN BY : M.E. GILES DATE : 12/04/13
CHECKED BY : J.D.HAWK DATE : 5/20/14
DESIGN ENGINEER OF RECORD: T.H. CARROLL DATE : 7/8/14

22-AUG-2014 14:07
R:\Structures\Plans\B4511_SD_RR_01.dgn
jdhawk

STD. NO. RR1