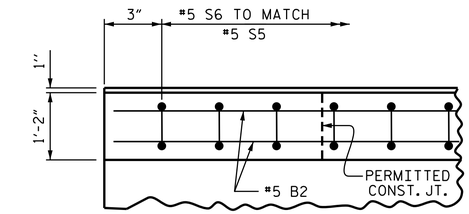

PLAN OF PARAPET

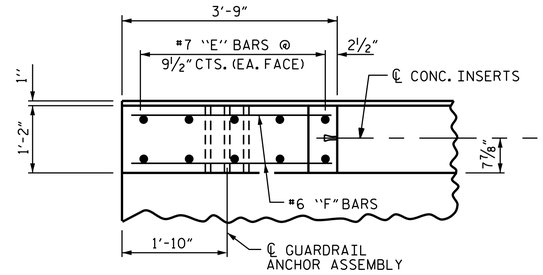

PLAN OF END POST

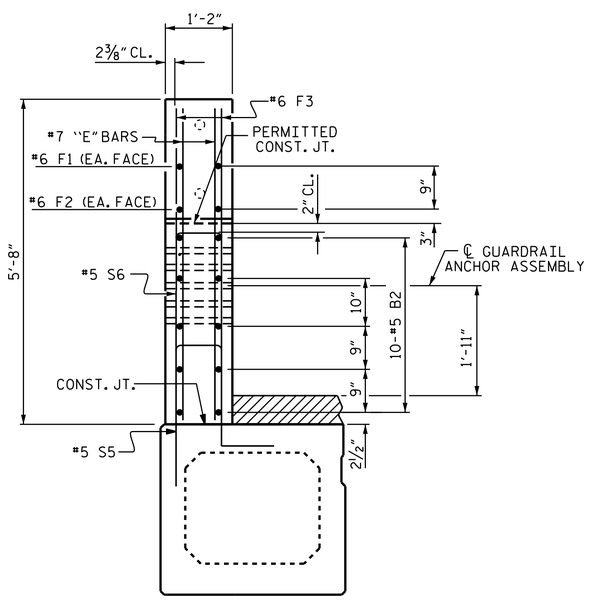

END VIEW

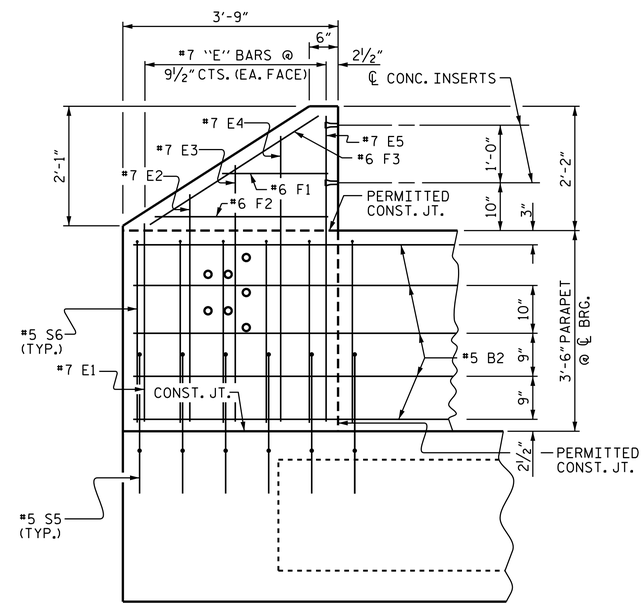

ELEVATION

PARAPET AND END POST FOR TWO-BAR RAIL

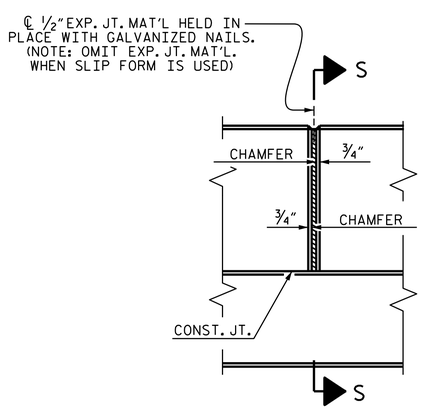

ELEVATION AT EXPANSION JOINTS

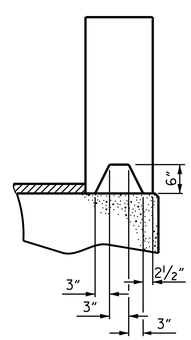

SECTION S-S

AT DAM IN OPEN JOINT
(THIS IS TO BE USED ONLY
WHEN SLIP FORM IS USED)

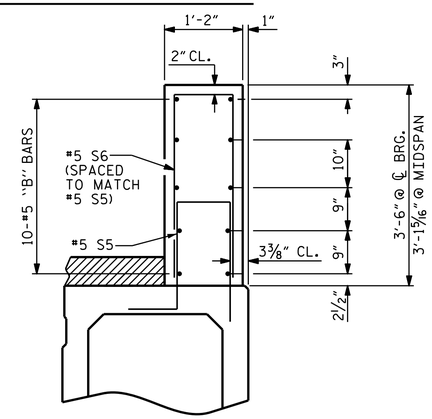

SECTION THROUGH PARAPET

PARAPET DETAILS

NOTES

ALL REINFORCING STEEL IN THE PARAPETS AND END POSTS SHALL BE EPOXY COATED.

#5 S5 BARS ARE INCLUDED IN THE BILL OF MATERIAL FOR BOX BEAM UNITS.

GROOVED CONTRACTION JOINTS, ½" IN DEPTH, SHALL BE TOOLED IN ALL EXPOSED FACES OF THE PARAPET AND IN ACCORDANCE WITH ARTICLE 825-10(B) OF THE STANDARD SPECIFICATIONS. A CONTRACTION JOINT SHALL BE LOCATED AT EACH THIRD POINT BETWEEN PARAPET EXPANSION JOINTS. ONLY ONE CONTRACTION JOINT IS REQUIRED AT MIDPOINT OF PARAPET SEGMENTS LESS THAN 20 FEET IN LENGTH AND NO CONTRACTION JOINTS ARE REQUIRED FOR THOSE SEGMENTS LESS THAN 10 FEET IN LENGTH.

THE ½" EXPANSION JOINT IN THE PARAPET MAY BE SHIFTED SLIGHTLY IN ORDER TO MAINTAIN A 2" MINIMUM CLEARANCE TO THE #5 S5 & #5 S6 BARS.

BAR TYPE

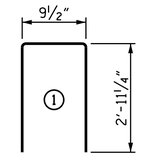

ALL BAR DIMENSIONS ARE OUT TO OUT

BILL OF MATERIAL FOR PARAPETS & END POSTS

BAR	NO.	SIZE	TYPE	LENGTH	WEIGHT
✳ B2	40	#5	STR	30'-0"	1252
✳ B3	20	#5	STR	28'-10"	601
✳ E1	8	#7	STR	3'-6"	57
✳ E2	8	#7	STR	4'-0"	65
✳ E3	8	#7	STR	4'-6"	74
✳ E4	8	#7	STR	5'-0"	82
✳ E5	8	#7	STR	5'-4"	87
✳ F1	8	#6	STR	1'-10"	22
✳ F2	8	#6	STR	3'-0"	36
✳ F3	8	#6	STR	3'-6"	42
✳ S6	244	#5	1	6'-8"	1697
✳ EPOXY COATED REINFORCING STEEL				LBS.	4,015
CLASS AA CONCRETE				CU.YDS.	26.6
1'-2" X 3'-6" CONCRETE PARAPET				LIN. FT.	180.00

PROJECT NO. B-4511

FORSYTH COUNTY

STATION: 18+66.50 -L-

STATE OF NORTH CAROLINA
DEPARTMENT OF TRANSPORTATION
RALEIGH

SUPERSTRUCTURE

PARAPET & END POST DETAILS

NORTH CAROLINA PROFESSIONAL SEAL 031480 ENGINEER DONALD R. SMITH, JR.

DocuSigned by: Donald R. Smith, Jr
EDC877061748490...
8/26/2014

REVISIONS						SHEET NO.
NO.	BY:	DATE:	NO.	BY:	DATE:	S-12
1			3			TOTAL SHEETS
2			4			19

DRAWN BY : M.E.GILES DATE : 9/27/13
CHECKED BY : T.H.CARROLL DATE : 10/2/13

22-AUG-2014 14:07
R:\Structures\Plans\B4511_SD_2MR_01.dgn
jdhawk