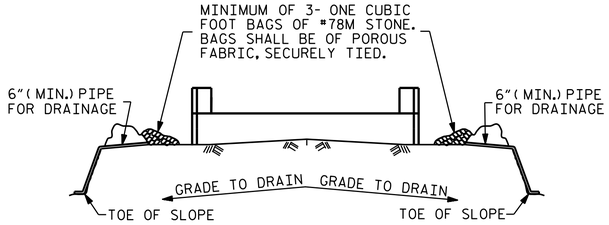

BAGGED STONE AND PIPE SHALL BE PLACED IMMEDIATELY AFTER COMPLETION OF END BENT EXCAVATION. PIPE MAY BE EITHER CONCRETE, CORRUGATED STEEL, CORRUGATED ALUMINUM ALLOY, OR CORRUGATED PLASTIC. PERFORATED PIPE WILL NOT BE ALLOWED.

BAGGED STONE SHALL REMAIN IN PLACE UNTIL THE ENGINEER DIRECTS THAT IT BE REMOVED. THE CONTRACTOR SHALL REMOVE AND DISPOSE OF SILT ACCUMULATIONS AT BAGGED STONE WHEN SO DIRECTED BY THE ENGINEER. BAGS SHALL BE REMOVED AND REPLACED WHENEVER THE ENGINEER DETERMINES THAT THEY HAVE DETERIORATED AND LOST THEIR EFFECTIVENESS.

NO SEPARATE PAYMENT WILL BE MADE FOR THIS WORK AND THE ENTIRE COST OF THIS WORK SHALL BE INCLUDED IN THE UNIT CONTRACT PRICE BID FOR THE SEVERAL PAY ITEMS.

TEMPORARY DRAINAGE AT END BENT

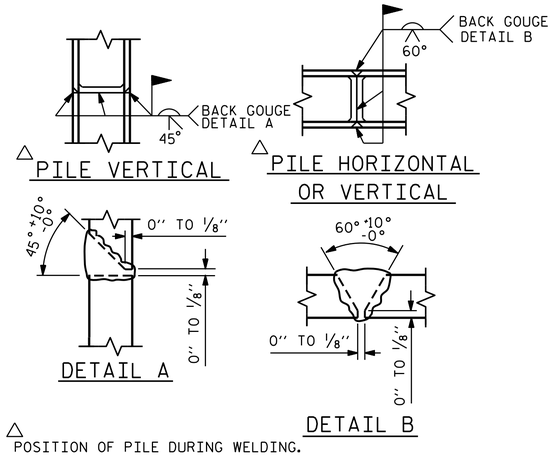

PILE SPLICE DETAILS

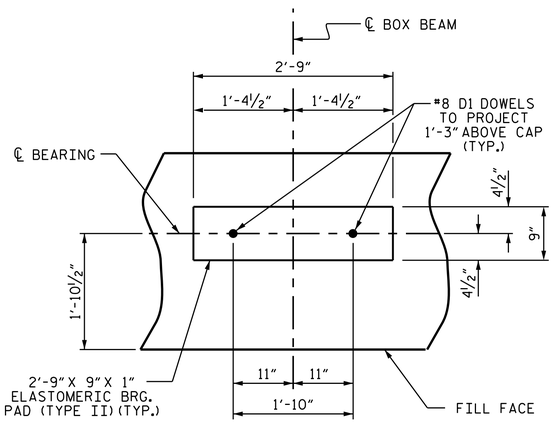

DETAIL "A"

(END BENT 1 SHOWN, END BENT 2 SIMILAR BY ROTATION)

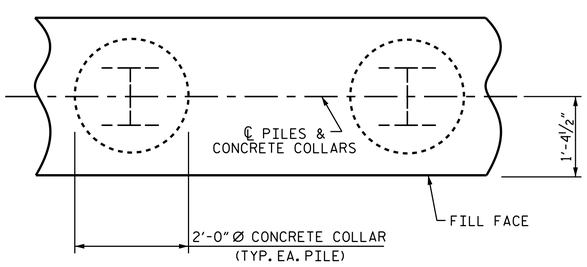

PLAN

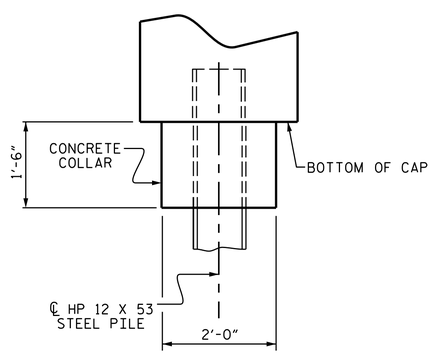

ELEVATION

CORROSION PROTECTION FOR STEEL PILES DETAIL

(END BENT 1 SHOWN, END BENT 2 SIMILAR BY ROTATION)

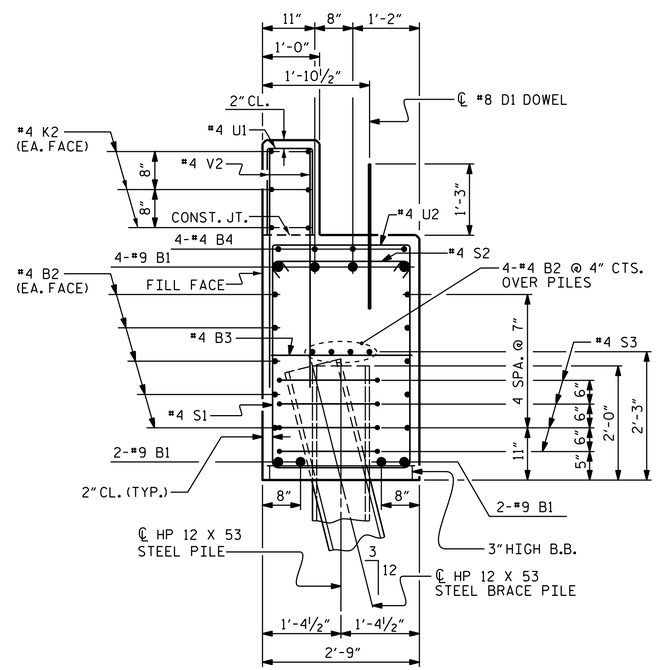

SECTION A-A

(CONCRETE COLLAR NOT SHOWN FOR CLARITY. SEE "CORROSION PROTECTION FOR STEEL PILES DETAIL.")

BAR TYPES

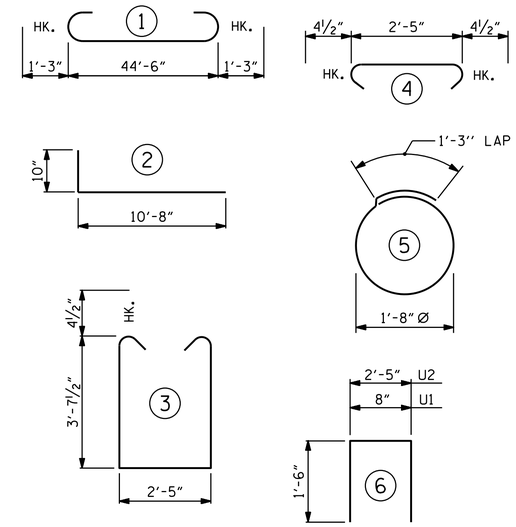

ALL BAR DIMENSIONS ARE OUT TO OUT.

END BENT 1	END BENT 2
HP 12 X 53 STEEL PILES NO. = 7 LIN. FT. 375	HP 12 X 53 STEEL PILES NO. = 7 LIN. FT. 245

BILL OF MATERIAL FOR ONE END BENT

BAR	NO.	SIZE	TYPE	LENGTH	WEIGHT
B1	8	#9	1	47'-0"	1278
B2	28	#4	STR	23'-7"	441
B3	12	#4	STR	2'-5"	19
B4	4	#4	STR	23'-0"	61
D1	26	#8	STR	2'-3"	156
H1	48	#5	2	11'-6"	576
K1	12	#4	STR	3'-1"	25
K2	12	#4	STR	23'-7"	189
S1	56	#4	3	10'-5"	390
S2	56	#4	4	3'-2"	118
S3	28	#4	5	6'-6"	122
U1	38	#4	6	3'-8"	93
U2	16	#4	6	5'-5"	58
V1	60	#4	STR	7'-5"	297
V2	76	#4	STR	5'-6"	279

REINFORCING STEEL (FOR ONE END BENT) LBS. 4,102

CLASS A CONCRETE BREAKDOWN (FOR ONE END BENT)

POUR #1	CAP, LOWER PART OF WINGS & COLLARS	C.Y.	23.5
POUR #2	BACKWALL & UPPER PART OF WINGS	C.Y.	6.5
TOTAL CLASS A CONCRETE		C.Y.	30.0

PROJECT NO. B-4511
FORSYTH COUNTY
STATION: 18+66.50 -L-

SHEET 4 OF 4

STATE OF NORTH CAROLINA
DEPARTMENT OF TRANSPORTATION
RALEIGH

SUBSTRUCTURE

END BENT 1 & 2 DETAILS

NORTH CAROLINA PROFESSIONAL SEAL 031480 ENGINEER DONALD R. SMITH, JR.

Docusigned by: Donald R. Smith, Jr.
EDC8770617AB490...
8/26/2014

REVISIONS								SHEET NO.
NO.	BY:	DATE:	NO.	BY:	DATE:			S-17
1			3					TOTAL SHEETS
2			4					19

DRAWN BY :	M.E. GILES	DATE :	10/13
CHECKED BY :	J.D.HAWK	DATE :	12/13
DESIGN ENGINEER OF RECORD:	T.H. CARROLL	DATE :	7/8/14

22-AUG-2014 14:07
R:\Structures\Plans\B4511_SD_E*_01.dgn
jdhawk