PROJECT REFERENCE NO.	SHEET NO.
B-4511	2A-1

ROADWAY DESIGN ENGINEER — NORTH CAROLINA PROFESSIONAL SEAL 22610 ENGINEER BRUCE B. PAYNE JR.
DocuSigned by: Bruce B. Payne 8/28/2014
18F3A3B9F727432...

PAVEMENT DESIGN ENGINEER — NORTH CAROLINA PROFESSIONAL SEAL 022896 ENGINEER CLARK S. MORRISON
DocuSigned by: Clark S Morrison 8/28/2014
0662B8018E4F400...

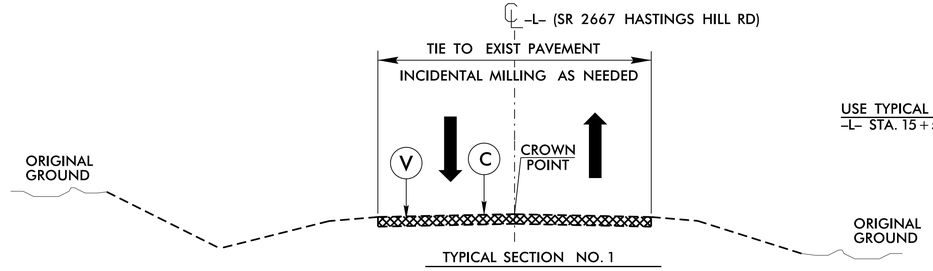

TYPICAL SECTION NO. 1

USE TYPICAL SECTION NO. 1
–L– STA. 15+50.00 TO 16+00.00

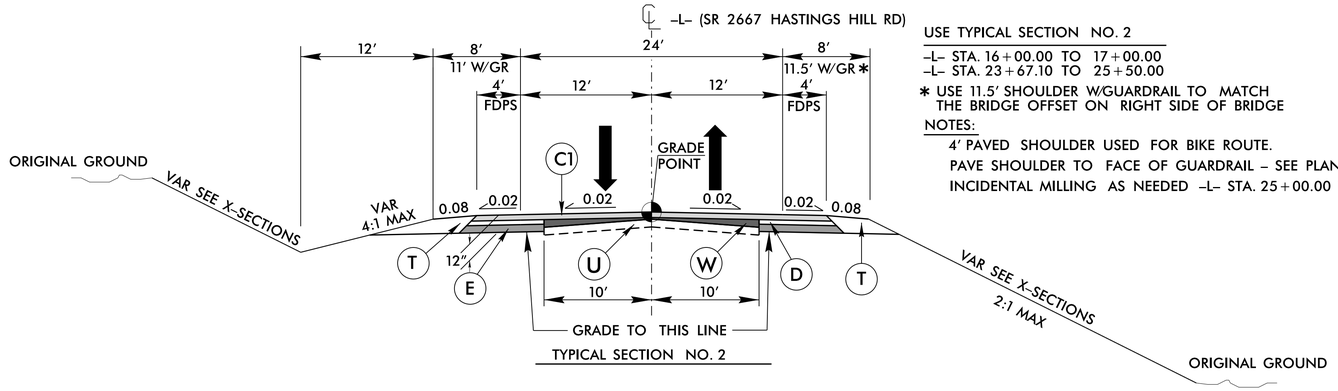

TYPICAL SECTION NO. 2

USE TYPICAL SECTION NO. 2
–L– STA. 16+00.00 TO 17+00.00
–L– STA. 23+67.10 TO 25+50.00
* USE 11.5′ SHOULDER W/GUARDRAIL TO MATCH THE BRIDGE OFFSET ON RIGHT SIDE OF BRIDGE

NOTES:
4′ PAVED SHOULDER USED FOR BIKE ROUTE.
PAVE SHOULDER TO FACE OF GUARDRAIL – SEE PLANS
INCIDENTAL MILLING AS NEEDED –L– STA. 25+00.00 TO 25+50.00.

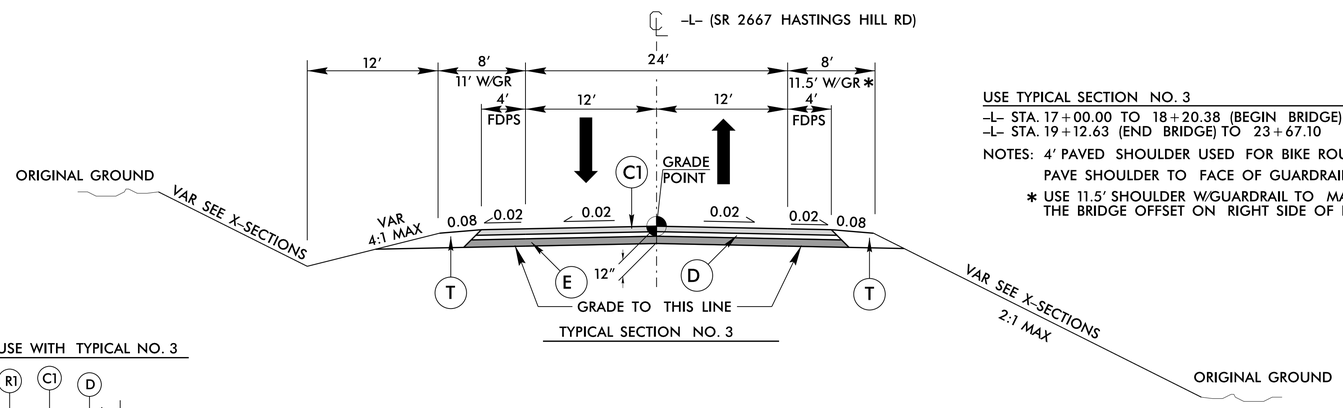

TYPICAL SECTION NO. 3

USE TYPICAL SECTION NO. 3
–L– STA. 17+00.00 TO 18+20.38 (BEGIN BRIDGE)
–L– STA. 19+12.63 (END BRIDGE) TO 23+67.10

NOTES: 4′ PAVED SHOULDER USED FOR BIKE ROUTE
PAVE SHOULDER TO FACE OF GUARDRAIL – SEE PLANS
* USE 11.5′ SHOULDER W/GUARDRAIL TO MATCH THE BRIDGE OFFSET ON RIGHT SIDE OF BRIDGE

PAVEMENT SCHEDULE

(PER FINAL PAVEMENT DESIGN MARCH 25, 2013)

C	PROP. APPROX. 1.5″ ASPHALT CONCRETE SURFACE COURSE, TYPE S9.5B, AT AN AVERAGE RATE OF 168 LBS. PER SQ. YD. LAYERS.
C1	PROP. APPROX. 3″ ASPHALT CONCRETE SURFACE COURSE, TYPE S9.5B, AT AN AVERAGE RATE OF 168 LBS. PER SQ. YD. IN EACH OF TWO LAYERS.
C2	PROP. VAR. DEPTH ASPHALT CONCRETE SURFACE COURSE, TYPE S9.5B, AT AN AVERAGE RATE OF 112 LBS. PER SQ. YD. PER 1″ DEPTH. TO BE PLACED IN LAYERS NOT LESS THAN 1.5″ IN DEPTH OR GREATER THAN 2″ IN DEPTH.
D	PROP. APPROX. 3.5″ ASPHALT CONCRETE INTERMEDIATE COURSE, TYPE I19.0B, AT AN AVERAGE RATE OF 399 LBS. PER SQ. YD.
D1	PROP. VAR. DEPTH ASPHALT CONCRETE INTERMEDIATE COURSE, TYPE I19.0B, AT AN AVERAGE RATE OF 114 LBS. PER SQ. YD. PER 1″ DEPTH, TO BE PLACED IN LAYERS NOT LESS THAN 2.5″ IN DEPTH OR GREATER THAN 4″ IN DEPTH.
E	PROP. APPROX. 5.5″ ASPHALT CONCRETE BASE COURSE, TYPE B25.0B, AT AN AVERAGE RATE OF 627 LBS. PER SQ. YD.
E1	PROP. VAR. DEPTH ASPHALT CONCRETE BASE COURSE, TYPE B25.0B, AT AN AVERAGE RATE OF 114 LBS. PER SQ. YD. PER 1″ DEPTH. TO BE PLACED IN LAYERS NOT LESS THAN 3″ IN DEPTH OR GREATER THAN 5.5″ IN DEPTH.
R1	SHOULDER BERM GUTTER
R2	SHOULDER BERM CURB
T	EARTH MATERIAL
U	EXISTING PAVEMENT
V	INCIDENTAL MILLING
W	VARIABLE DEPTH ASPHALT PAVEMENT (SEE DETAIL SHOWING METHOD OF WEDGING)

NOTE: PAVEMENT EDGE SLOPES ARE 1:1 UNLESS SHOWN OTHERWISE.

DETAIL NO. 1 – USE WITH TYPICAL NO. 3

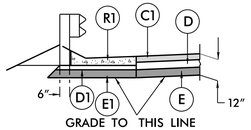

DETAIL SHOWING SHOULDER BERM GUTTER (SBG) ON TOP OF SUBGRADE

–L– STA. 17+90.00 TO –L– STA. 18+09.38 (LT & RT)

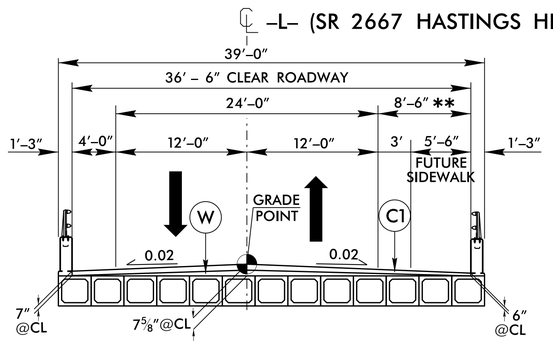

TYPICAL SECTION NO. 4

ASPHALT WEARING SURFACE ON BOX BEAM STRUCTURE

USE TYPICAL SECTION NO. 4
–L– STA. 18+20.38 TO 19+12.63
** 1′ ADDED FOR HYDRAULIC SPREAD

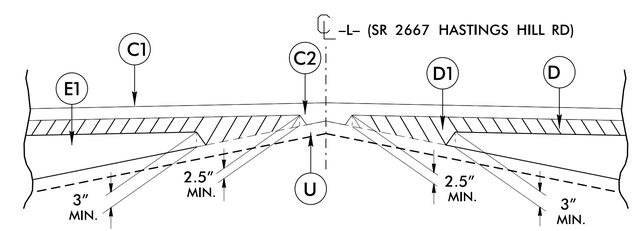

Detail Showing Method of Wedging

6/2/99

25-AUG-2014 14:54
R:\Roadway\Proj\B4511_Rdy_typ_2.dgn
$$$$USERNAME$$$$