T2 THERMO WHITE STOPBAR (24", 120 mils)
T8 THERMO 2'-6'/SP WHITE MINI-SKIP (4", 120 mils)
TA THERMO WHITE EDGELINE (4", 90 mils)
TC THERMO 10' WHITE SKIP (4", 120 mils)
TD THERMO 3'-9'/SP WHITE MINI-SKIP (4" 120 mils)
TE THERMO WHITE SOLID LANE LINE (4", 120 miles)
TF THERMO 10' YELLOW SKIP (4", 120 mils)
TH THERMO YELLOW SINGLE CENTER (4", 120 mils)
TI THERMO YELLOW DOUBLE CENTER (4" 120 mils)
TP THERMO YELLOW DIAGONAL (8", 90 mils)
TQ THERMO WHITE CROSSWALK LINE (8", 120 mils)
UA THERMO LEFT TURN ARROW (90 mils)
UB THERMO RIGHT TURN ARROW (90 mils)
UC THERMO STRAIGHT ARROW (90 mils)
UJ THERMO BICYCLE SYMBOL (90 mils)
UK THERMO BICYCLE STRAIGHT ARROW (90 mils)
UR SHARROW (90 mils)

NOTES
THE FOLLOWING GENERAL NOTES APPLY AT ALL TIMES FOR THE DURATION OF THE CONSTRUCTION PROJECT, EXCEPT WHEN OTHERWISE NOTED IN THE PLAN, OR DIRECTED BY THE ENGINEER.
1) PLACE TWO APPLICATIONS OF PAINT PAVEMENT MARKINGS ON THE FINAL WEARING SURFACE. PLACE THE SECOND APPLICATION OF PAINT UPON SUFFICIENT DRYING TIME OF THE FIRST.
2) TIE PROPOSED PAVEMENT MARKING LINES TO EXISTING PAVEMENT MARKING LINES.
3) STOP BAR LOCATION AT NON-SIGNALIZED INTERSECTIONS MAY BE ADJUSTED AS DIRECTED BY THE ENGINEER.
4) UNLESS OTHERWISE SPECIFIED, HEATED-IN-PLACE THERMOPLASTIC MAY BE USED IN LIEU OF EXTRUDED THERMOPLASTIC FOR STOPBARS, SYMBOLS, CHARACTERS AND DIAGONALS. IF HEATED-IN-PLACE IS USED, IT SHALL BE PAID FOR USING THE EXTRUDED THERMOPLASTIC PAY ITEM.
5) CROSSWALKS HAVE 8 FEET OF SEPARATION BETWEEN LINES. ALL STOPBARS SHALL BE LOCATED 4 FEET BEHIND AND PARALLEL TO CROSSWALKS.
6) LOCATE CENTER OF SHARROW IN CENTER OF LANE.

DIVISION OF HIGHWAYS
STATE OF NORTH CAROLINA
DEPARTMENT OF TRANSPORTATION
WORK ZONE TRAFFIC CONTROL UNIT

DURHAM
1 8 6 9
CITY OF MEDICINE
City of Durham
101 City Hall Plaza
Durham, NC 27701
(919) 560-4366

N
0 15 30
SCALE 1"=30'

TIP NO.	SHEET NO.
5CR.10321.28, ETC	PMP-4

APPROVED: _____
DATE: _____
SEAL
NORTH CAROLINA PROFESSIONAL SEAL 038036 ENGINEER LESLIE M. TRACEY
9-17-14

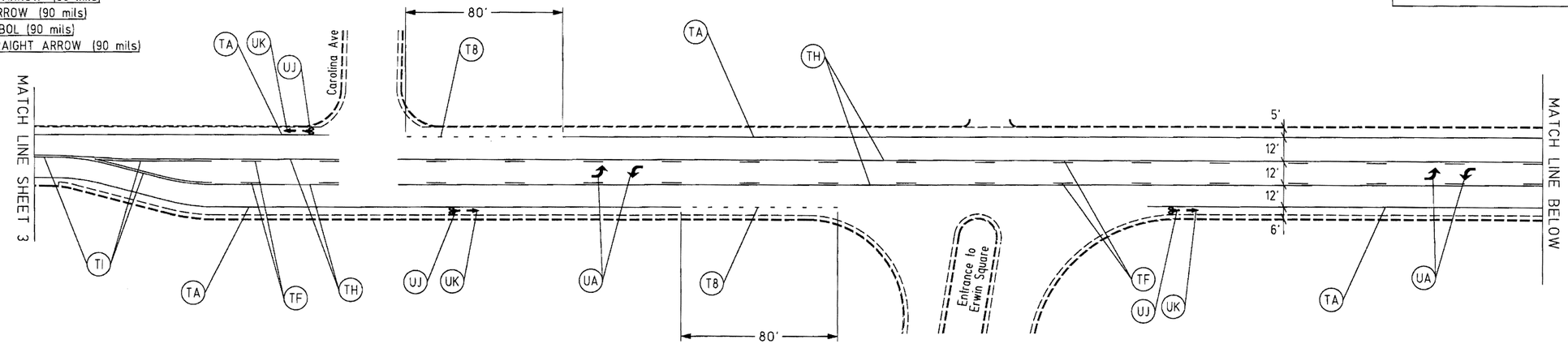

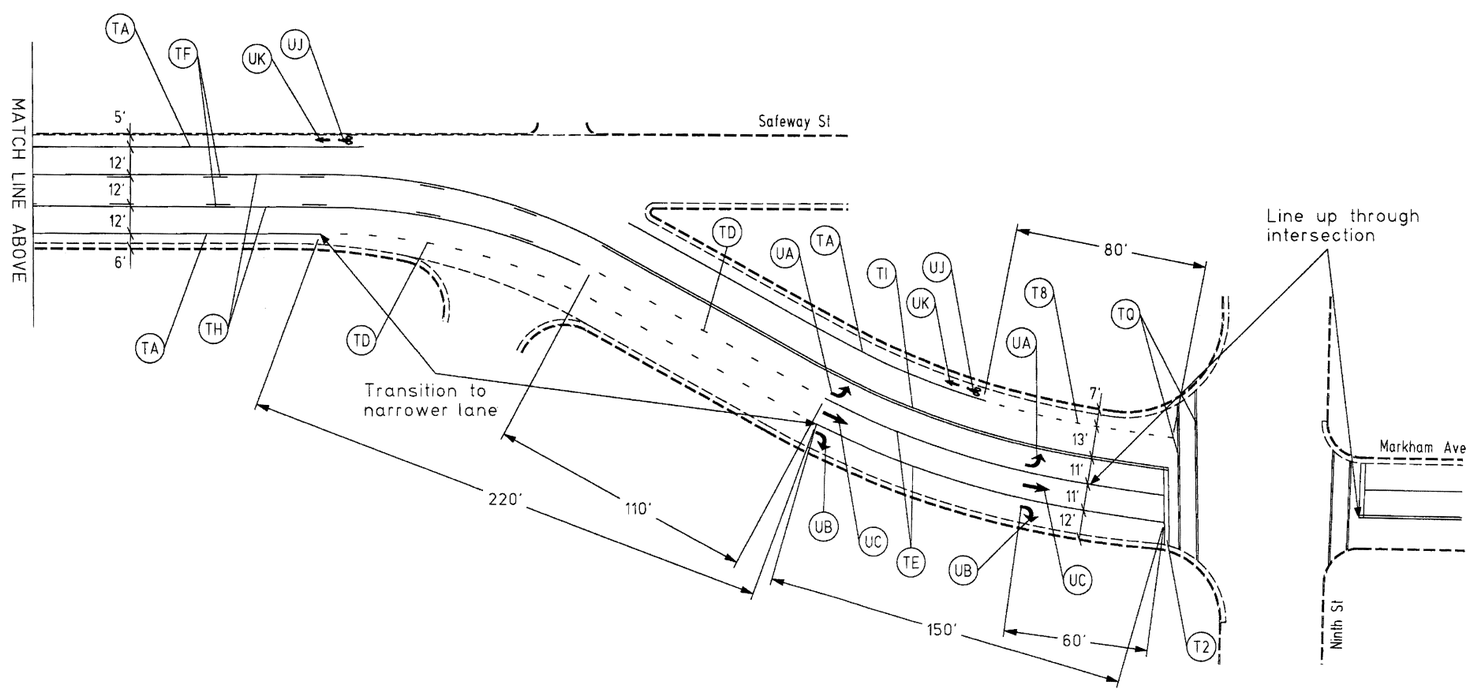

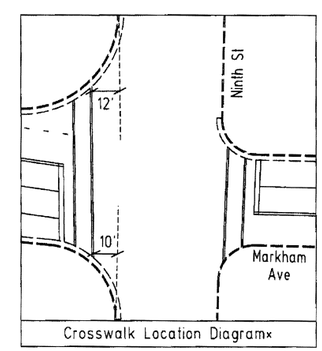

Crosswalk Location Diagram*
*See Note 5

PAVEMENT MARKING DETAIL
US 70 Bus (Hillsborough St)