PROJECT REFERENCE NO.	SHEET NO.
SCR.10321.28 SCR.20321.28	11

PAVEMENT SCHEDULE

C1	1½" ASPHALT CONCRETE SURFACE COURSE, TYPE S9.5B, AT AN AVERAGE RATE OF 168 LBS. PER SQ. YD.	V1	0" - 1½" MILLING ADDITIONAL MILLING REQUIRED TO PAVE BACK FLUSH WITH CURB AND GUTTER
C2	2" ASPHALT CONCRETE SURFACE COURSE, TYPE S9.5B, AT AN AVERAGE RATE OF 224 LBS. PER SQ. YD.	V2	1½" MILLING
D	2½" ASPHALT CONCRETE INTERMEDIATE COURSE, TYPE I19.0B, AT AN AVERAGE RATE OF 285 LBS. PER SQ. YD.	V3	2" MILLING
E	6" ASPHALT CONCRETE BASE COURSE, TYPE B25.0B, AT AN AVERAGE RATE OF 342 LBS. PER SQ. YD. IN EACH OF 2 LAYERS	V4	2½" MILLING
M	CONTINUOUS MILLED RUMBLE STRIP	V5	3" MILLING
U	EXISTING PAVEMENT		

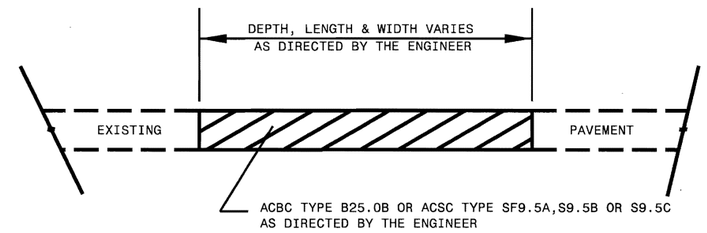

PATCHING EXISTING PAVEMENT

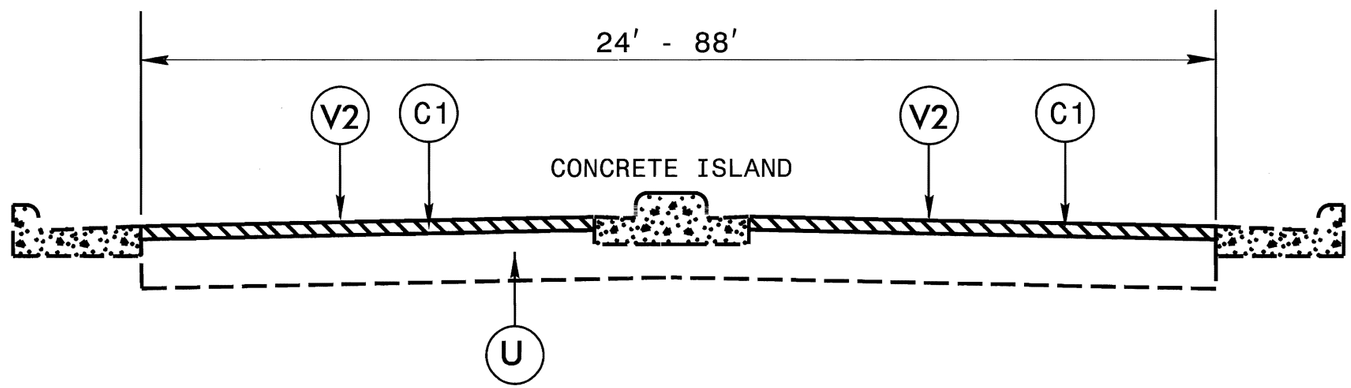

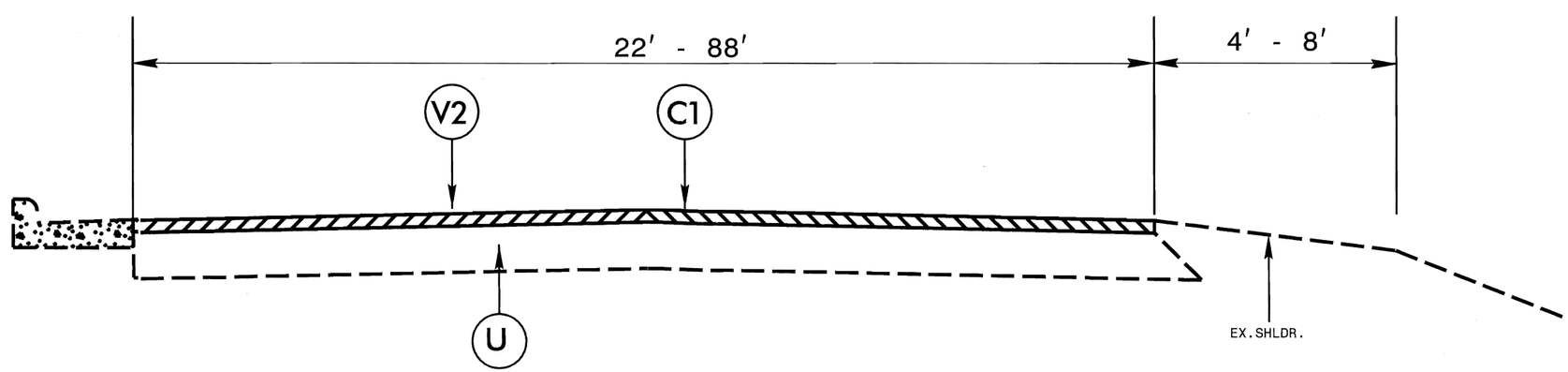

TYPICAL SECTION NO. 3