8/17/99

REVISIONS

PROJECT REFERENCE NO.	SHEET NO.
B-5325	UC-3

DESIGNED BY: BJPO
DRAWN BY: TK
CHECKED BY: BJPO
APPROVED BY: BJPO
REVISED:

NORTH CAROLINA DEPARTMENT OF TRANSPORTATION

UTILITIES ENGINEERING SEC.
PHONE: (919) 250-4128
FAX: (919) 250-4119

NORTH CAROLINA PROFESSIONAL SEAL 38689 ENGINEER BRIAN J. POSCHWALD
DocuSigned by: Brian Poschwald 26AABB2E2EAF455... 8/5/2014
UTILITY CONSTRUCTION PLANS ONLY

PREPARED IN THE OFFICE OF:

THE WOOTEN COMPANY
ENGINEERING | PLANNING | ARCHITECTURE
120 North Boylan Avenue Raleigh NC 27603-1423
919.828.0531 fax 919.834.3589
License Number: F-0115

VERTICAL SCALE 5' 0 5' 10'
HORIZONTAL SCALE 25' 0 25' 50'

UTILITY CONSTRUCTION

REVISIONS			
SYM.	DESCRIPTION	DATE	BY

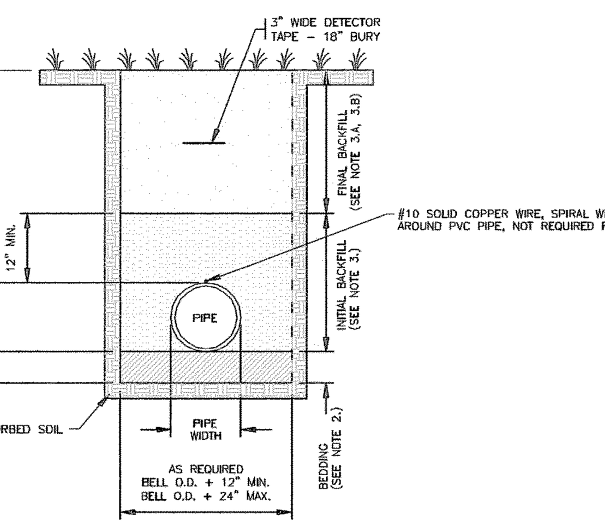

WATER MAIN TRENCH DETAILS
TYPE 3 LAYING CONDITIONS
N.T.S.

NOTES:

1. LAYING CONDITIONS AS PER AWWA C600 AND C605 STANDARDS.
2. BEDDING MATERIAL SHALL BE 4" MINIMUM THICKNESS, LOOSE SOIL (DEFINED AS NATIVE SOIL EXCAVATED FROM THE TRENCH), FREE FROM ROCKS AND SHALL PROVIDE UNIFORM SUPPORT FOR THE FULL LENGTH OF PIPE. COMPACT TO 95% MAXIMUM DENSITY.
3. INITIAL BACKFILL SHALL BE LIGHTLY CONSOLIDATED IN MAXIMUM 6" LOOSE LIFTS, COMPACTED TO 95% OF MAXIMUM DENSITY.
   A: UNDER AREAS TO BE SEEDED OR SODDED, COMPACT SUCCEEDING LAYERS OF FINAL BACKFILL IN 12" LOOSE LIFTS TO 85% MAXIMUM DENSITY.
   B: UNDER STRUCTURES, PAVEMENTS AND ROAD SHOULDERS, COMPACT SUCCEEDING LAYERS OF FINAL BACKFILL IN 6" LOOSE LIFTS TO 95% MAXIMUM DENSITY EXCEPT COMPACT TOP 12" OF SUBGRADE TO 98% MAXIMUM DENSITY.
4. PROVIDE #10 SOLID COPPER WIRE IN SUFFICIENT LENGTH TO BE SPIRAL WRAPPED AROUND EACH SEPARATE RUN OF ALL BURIED PVC PIPING. AT VALVE BOXES, BRING WIRE TO WITHIN 6 IN. OF TOP OF BOX AND INSERT INTO BOX THROUGH DRILLED HOLE. NOT REQUIRED FOR DUCTILE IRON PIPE.
5. INSTALL 3' WIDE DETECTOR TAPE AT 18" DEPTH. TAPE SHALL HAVE MIDDLE FOIL LAYER.

FRANKLIN COUNTY PUBLIC UTILITIES
DRAWING # W-1 — STANDARD WATER MAIN TRENCH DETAIL

REVISIONS			
SYM.	DESCRIPTION	DATE	BY

NOTES:
1.) INSTALL MARKER POSTS ON EDGE OF THE DOT R/W LINE.
2.) PROVIDE MARKER POSTS AT ALL LINE VALVES.
3.) ABBREVIATIONS STAMPED ON POST AS FOLLOWS: MV = MAIN VALVE BO=BLOW OFF VALVE

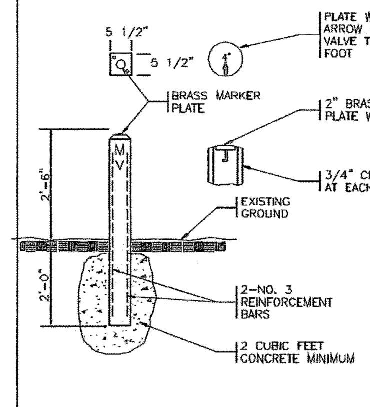

VALVE MARKER POST DETAIL
N.T.S.

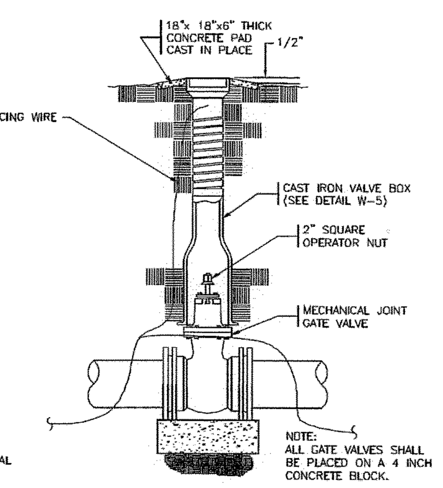

NOTES:
1. PLACE GATE VALVES ON 4" CONCRETE BLOCK.
2. WHERE PVC PIPE IS BEING INSTALLED, 6 IN. OF COMPACTED #57 STONE MAY BE USED IN LIEU OF THE 4" CONCRETE BLOCK.

GATE VALVE ASSEMBLY
N.T.S.

NOTE:
1. BRING #10 SOLID COPPER WIRE TO WITHIN 6" OF TOP OF BOX AND INSERT INTO BOX THROUGH DRILLED HOLE.

FRANKLIN COUNTY PUBLIC UTILITIES
DRAWING # W-2 — GATE VALVE ASSEMBLY

REVISIONS			
SYM.	DESCRIPTION	DATE	BY

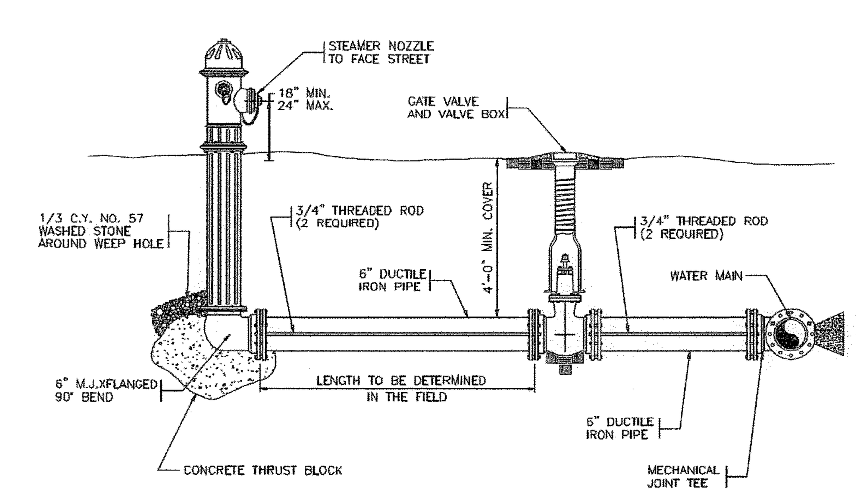

FIRE HYDRANT AND VALVE DETAIL
N.T.S.

NOTES:
1. ALL PIPE JOINTS SHALL BE MECHANICAL. MEGA-LUG RESTRAINTS MAY BE USED IN PLACE OF RODS.
2. PLACE HYDRANTS AT PROPERTY CORNERS AS DIRECTED BY FRANKLIN COUNTY.
3. ALL HYDRANTS SHALL RECEIVE 2 SHOP COATS AND 1 FIELD COAT OF OSHA SAFETY COLOR RED AS DESCRIBED IN AWWA C502. ALL NOZZLE CAPS AND BONNETT SHALL BE PAINTED WHITE. PAINT SHALL BE HIGH-GLOSS ENAMEL.
5. APPLY 2 - COATS OF BITUMASTIC MATERIAL TO RODS OR PROVIDE GALVANIZED RODS.

FRANKLIN COUNTY PUBLIC UTILITIES
DRAWING # W-4 — STANDARD FIRE HYDRANT INSTALLATION DETAIL

REVISIONS			
SYM.	DESCRIPTION	DATE	BY

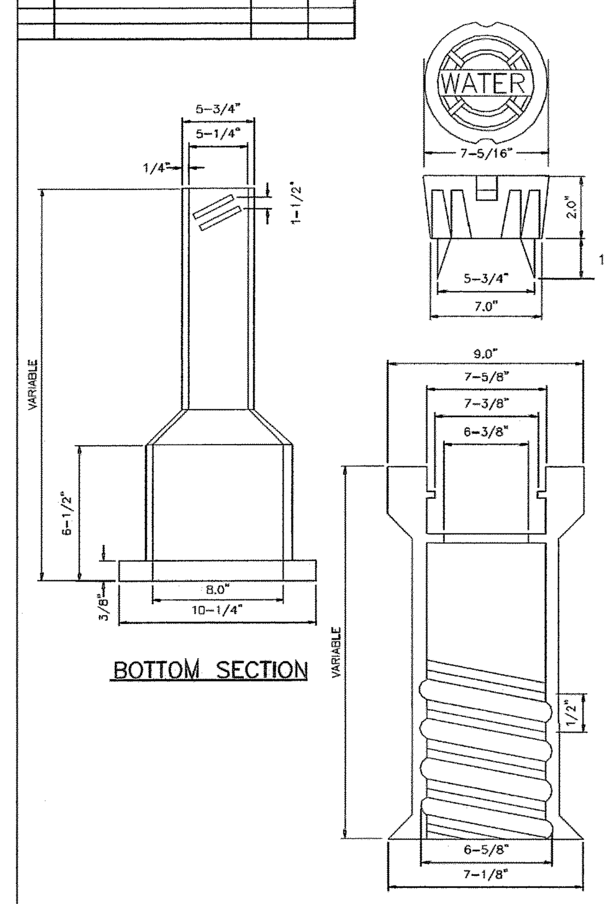

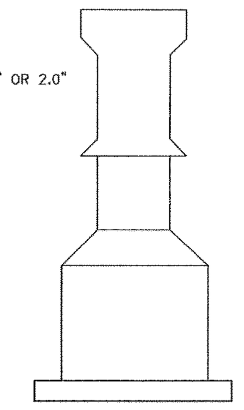

COMPLETE BOX

DIMENSIONS IN INCHES LENGTH

TOP	BOTTOM
10	15
10	24
16	24
16	36
26	36
26	48
26	60

NOTES
1. VALVE BOX SHALL HAVE RAISED LETTERS "WATER" CAST INTO COVER.
2. VALVE BOX ACCOMMODATES 4" THRU 12" VALVES.
3. VALVE BOX SHALL HAVE ⅝" HOLE DRILLED IN TOP SECTION THRU WHICH A ½" X 1½" GALVANIZED BOLT SHALL BE USED TO SECURE A 12GA. THHN TRACER WIRE FOR NON-FERROUS PIPE. A ½" WASHER SHALL BE USED BETWEEN NUT AND INSIDE OF BOX. TIGHTEN HAND TIGHT.
4. SCREW TYPE VALVE BOXES ARE REQUIRED.
5. DIMENSIONS SHOWN ARE FOR INFORMATION ONLY AND VARY BASED UPON THE MANUFACTURER.

FRANKLIN COUNTY PUBLIC UTILITIES
DRAWING # W-5 — SCREW-TYPE VALVE BOX

REVISIONS			
SYM.	DESCRIPTION	DATE	BY

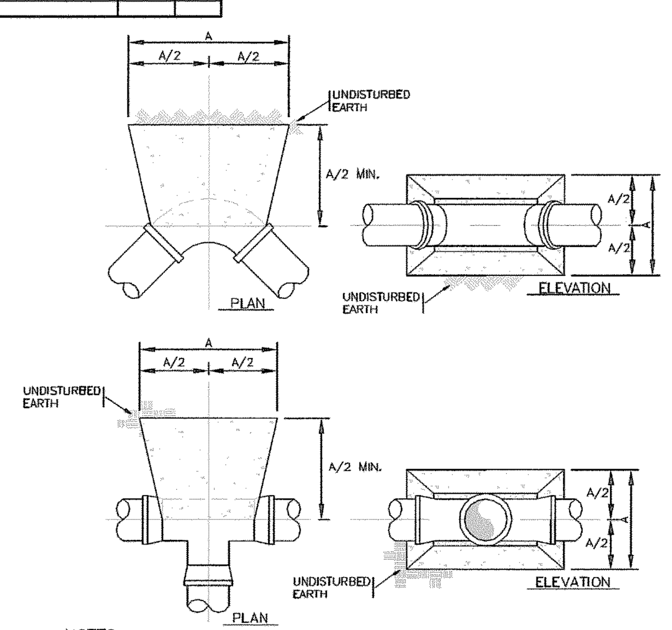

NOTES:
1. THRUST BLOCKS SHALL BE CONSTRUCTED OF 2500 P.S.I. CONCRETE
2. INSTALL TAR PAPER AROUND BEND OR FITTING TO PREVENT BONDING OF CONCRETE.
3. PRESSURE TEST AT 200 P.S.I.

BEND / FITTING	DIMENSION A (FEET) PIPE SIZE (NOM. DIA. IN INCHES) 4	6	8	10	12	16	18	20	24
90° BEND	1.4	2.0	2.7	3.4	4.0	5.4	6.0	6.7	8.0
45° BEND	1.0	1.5	2.0	2.5	3.0	4.0	4.5	5.0	5.9
22 1/2° BEND	0.8	1.1	1.5	1.8	2.2	2.9	3.2	3.6	4.3
11 1/4° BEND	0.5	0.8	1.0	1.3	1.5	2.0	2.3	2.5	3.0
TEE BRANCH/DEAD END	1.2	1.7	2.3	2.9	3.4	4.5	5.1	5.7	6.8

CONCRETE THRUST BLOCK DETAIL FOR
PRESSURE MAIN HORIZONTAL BENDS AND TEES
N.T.S.

FRANKLIN COUNTY PUBLIC UTILITIES
DRAWING # W-6 — CONCRETE THRUST BLOCKING

REVISIONS			
SYM.	DESCRIPTION	DATE	BY

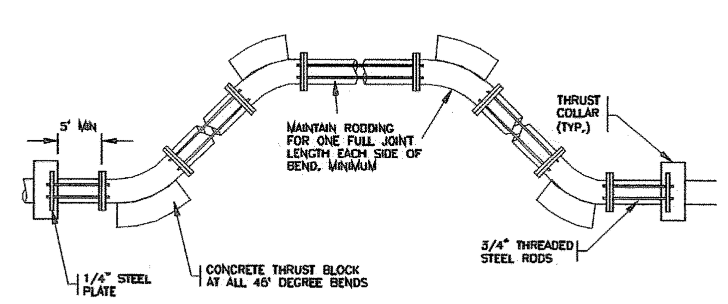

STATIC THRUST SIZE OF 45° BEND	NUMBER OF IN POUNDS	NUMBER OF RODS REQUIRED
6"	4,328	2
8"	7,694	2
12"	17,312	2
16"	30,779	4
20"	48,091	6
24"	69,252	8

NOTES:
1. ONCE INSTALLED AND TIGHT, THE STEEL RODS AND BOLTS SHALL BE COATED WITH 2 COATS OF BITUMINOUS BASE PAINT.
2. CONCRETE SHALL NOT CONTACT BOLTS OR ENDS OF MECHANICAL JOINT BENDS.

FRANKLIN COUNTY PUBLIC UTILITIES
DRAWING # W-8 — VERTICAL BENDS

REVISIONS			
SYM.	DESCRIPTION	DATE	BY

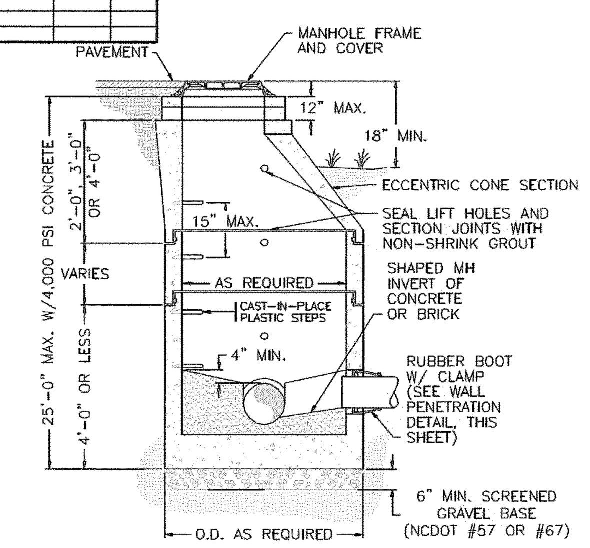

ECCENTRIC CONE
TOP MANHOLE
SECTION A-A

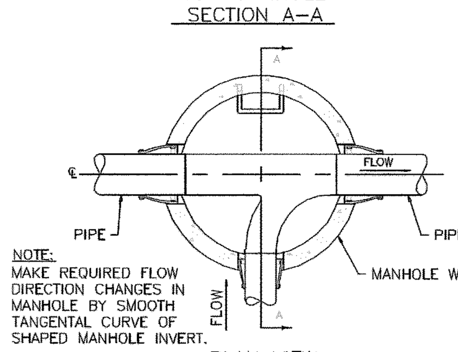

NOTE:
MAKE REQUIRED FLOW DIRECTION CHANGES IN MANHOLE BY SMOOTH TANGENTAL CURVE OF SHAPED MANHOLE INVERT.

PLAN VIEW

PRECAST MANHOLE DETAIL
N.T.S.

FRANKLIN COUNTY PUBLIC UTILITIES
DRAWING # S-7 — PRECAST MANHOLE DETAIL

REVISIONS			
SYM.	DESCRIPTION	DATE	BY

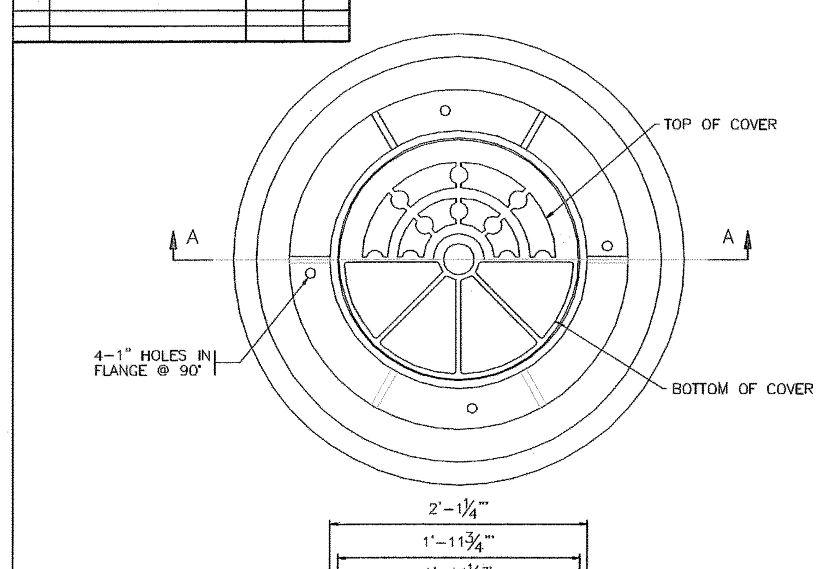

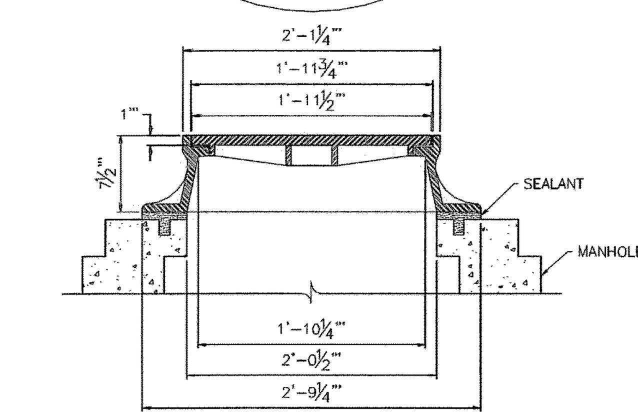

SECTION A-A

MANHOLE COVER DETAIL
N.T.S.

NOTES:
1. COVERS TO READ "SANITARY SEWER"

FRANKLIN COUNTY PUBLIC UTILITIES
DRAWING # S-11 — MANHOLE COVER DETAIL

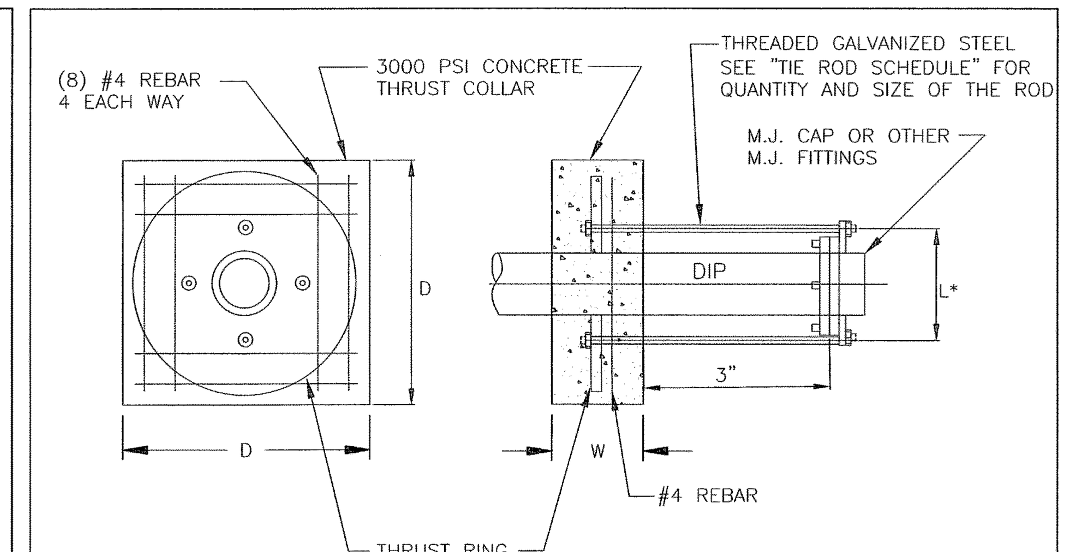

THRUST COLLAR SHALL BE FORMED USING ½" EXTERIOR PLYWOOD AS PER COLLAR DIMENSIONS SHOWN.

TIE ROD SCHEDULE

PIPE DIAM.	TIE ROD QUAN.	TIE ROD SIZE
4"	2	5/8"
6"	2	3/4"
8"	2	3/4"
12"	4	3/4"
16"	4	7/8"
20"	4	1"
24"	4	1 1/4"
30"	4	1 1/2"

COLLAR DIMENSIONS

LINE SIZE	MIN. W	MIN. D	PLATE DIAM.
4"	6"	L+8"	L+2"
6"	9"	L+9"	L+3"
8"	12"	L+9"	L+3"
12"	18"	L+9"	L+3"
16"	18"	L+9"	L+3"
20"	20"?	L+9"	L+3"
24"	24"?	L+10"	L+4"
30"	24"?	L+11"	L+5"

* CONTRACTOR VERIFY DISTANCE W/COLLAR SUPPLIERS.

THRUST COLLAR
NOT TO SCALE

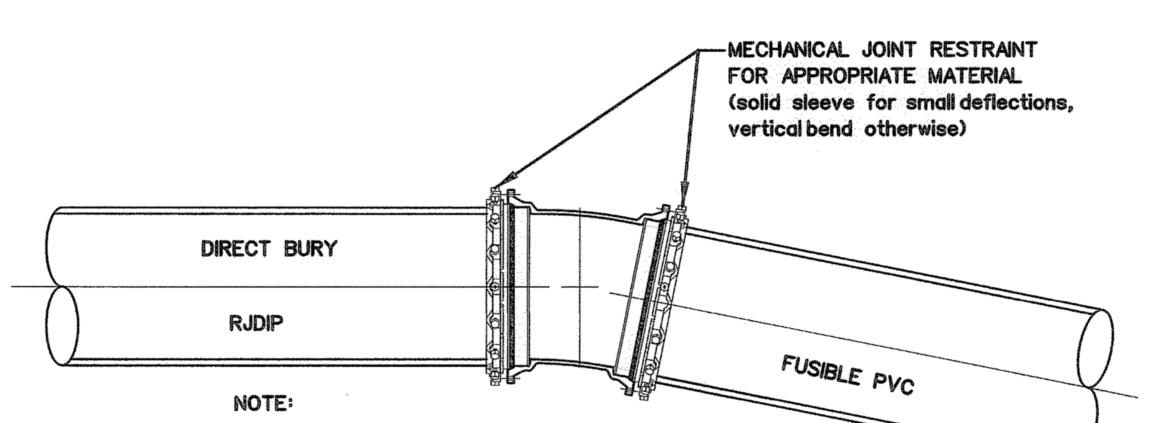

NOTE:

FUSIBLE PVC SHALL NOT BE DEFLECTED AT MECHANICAL JOINT FITTINGS. USE BENDS AS NECESSARY TO LINE UP WITH DIRECT BURY

DIRECT BURY FUSIBLE PVC TRANSITION
NOT TO SCALE

$$$$$$SYSTIME$$$$ $$$$$$DGN$$$$$$$$$$$$$$$$$ $$$$$$USERNAME$$$$