PROJ. REFERENCE NO.	SHEET NO.
B-5325	TMP-3

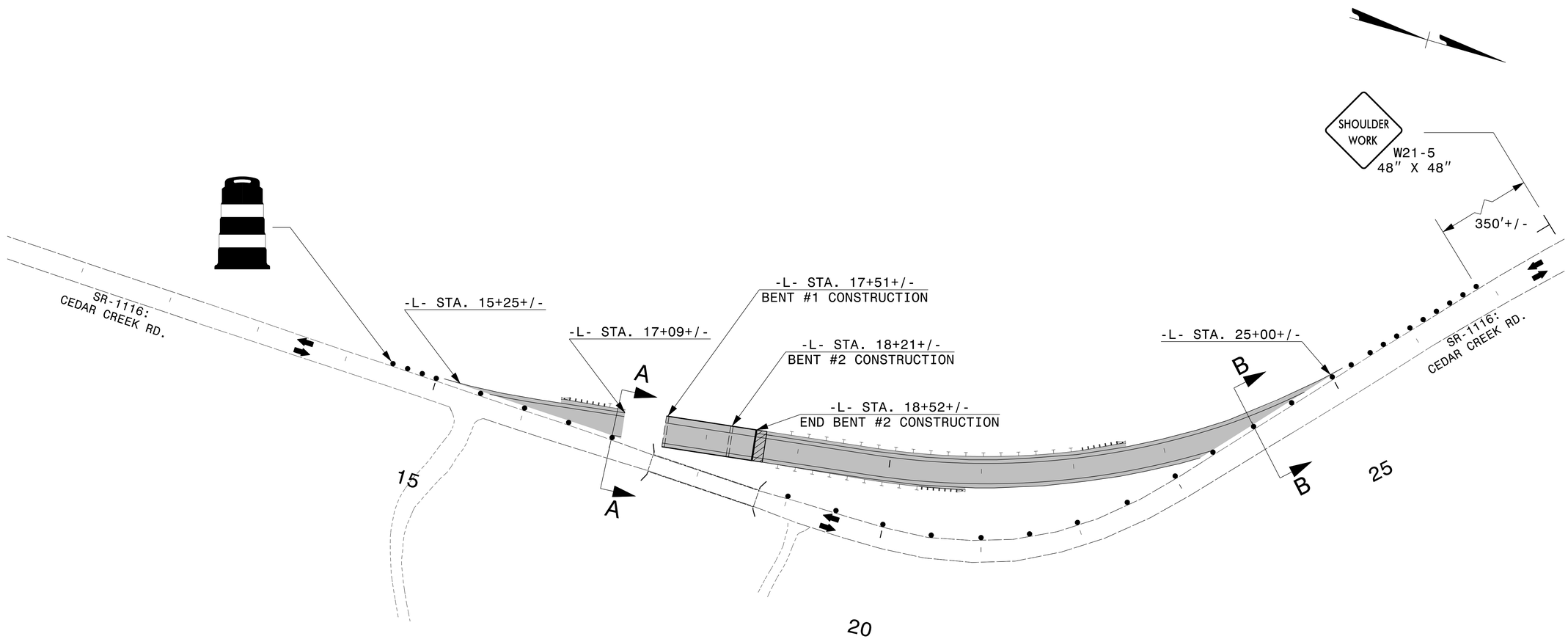

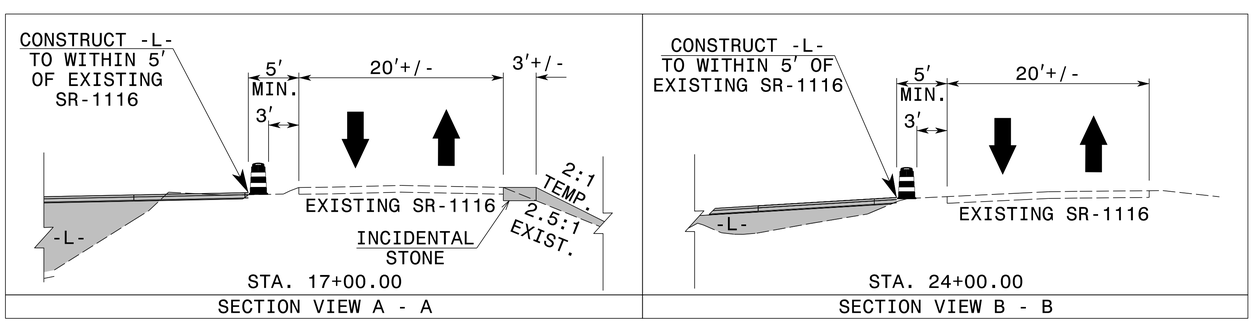

CUT-SECTIONS SHOW TYPICAL RELATIONSHIP BETWEEN TRAFFIC AND CONSTRUCTION FOR PROPOSED -L- FILL AND CUT CONDITIONS

NOTES:

1) REFER TO RSD 1101.02 FOR LANE CLOSURE SIGNS, SIGN DISTANCES, DRUM SPACING AND APPLICABLE NOTES.

2) REFER TO RSD 1101.04 FOR SHOULDER CLOSURE SIGNS, SIGN DISTANCES, DRUM SPACING AND APPLICABLE NOTES.

APPROVED: DocuSigned by: David Bissette DATE: 8/5/2014

SEAL

NORTH CAROLINA PROFESSIONAL SEAL 30864 ENGINEER DAVID W. BISSETTE

DIVISION OF HIGHWAYS STATE OF NORTH CAROLINA DEPARTMENT OF TRANSPORTATION WORK ZONE TRAFFIC CONTROL

PHASE I DETAIL

8/4/2014
R:\TIPProjects-B\B5325\Traffic\TrafficControl\TCP\B-5325_TC_TMP_3.dgn
User:drkennedy