PROJECT REFERENCE NO.	SHEET
B-5325	2G-1

GEOTECHNICAL ENGINEER

NORTH CAROLINA PROFESSIONAL SEAL 038176 ENGINEER SHUKAI ZHANG

DocuSigned by: Shukai Zhang 9/17/2014
245D67F41814A35...
SIGNATURE DATE

ENGINEER

SIGNATURE DATE

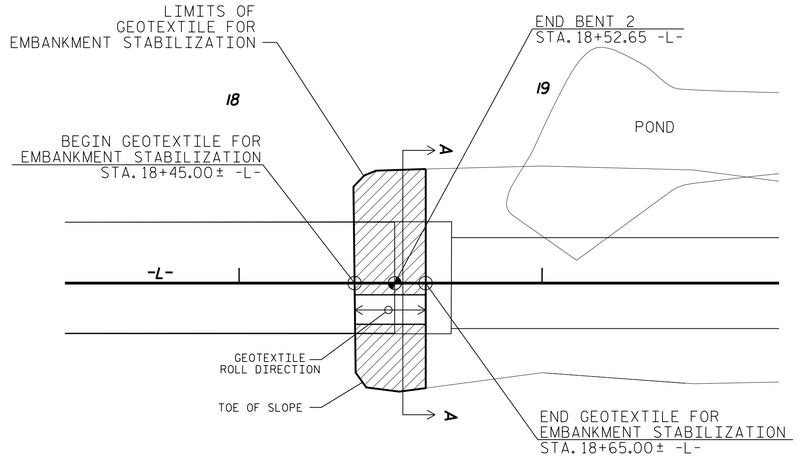

PLAN VIEW FOR LIMITS OF GEOTEXTILE

N.T.S.

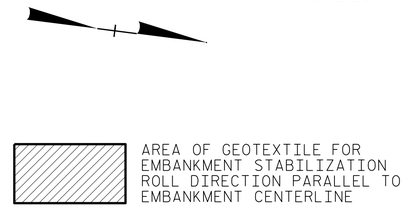

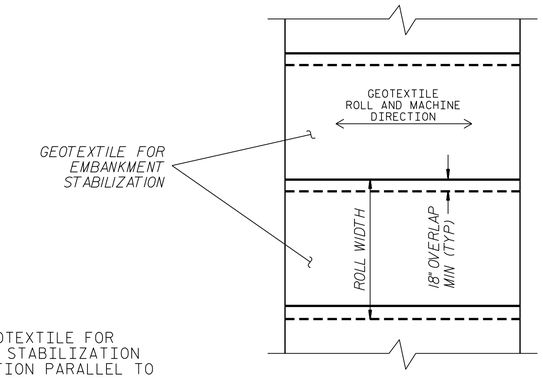

GEOTEXTILE OVERLAP DETAIL

(PLAN VIEW)

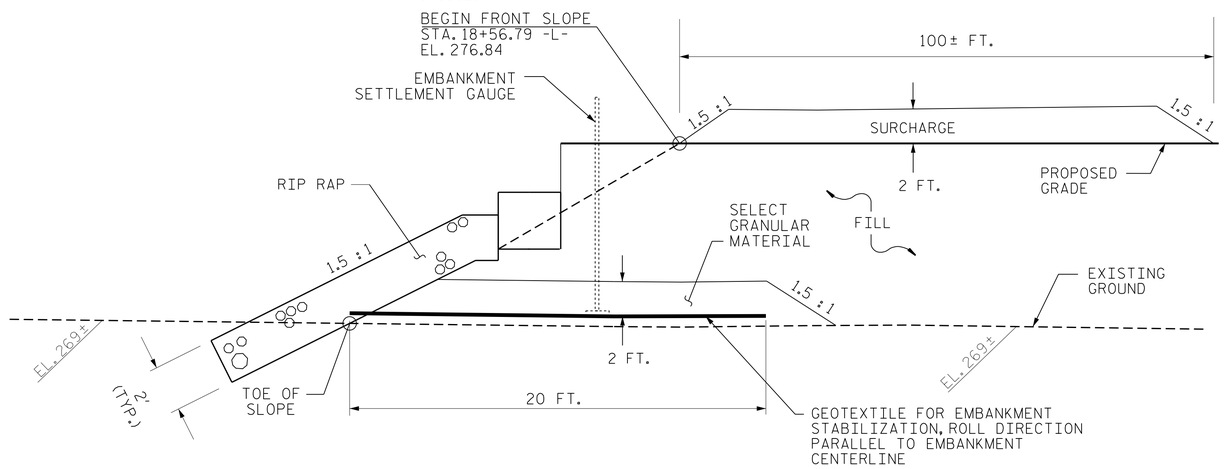

SECTION ALONG –L–

N.T.S.

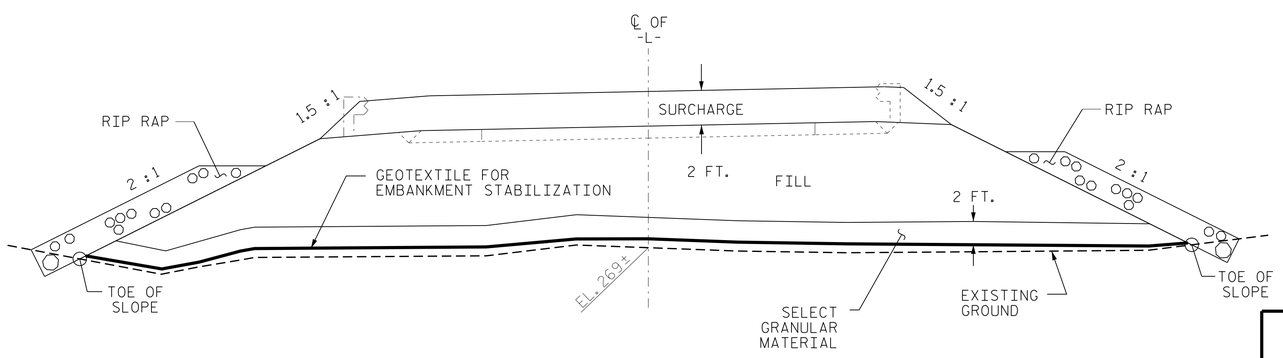

TYPICAL CROSS SECTION A–A

N.T.S.

NOTES

1. DO NOT GRUB, ONLY CLEAR THE AREA WITHIN THE LIMITS OF THE GEOTEXTILE FOR EMBANKMENT STABILIZATION.
2. PLACE GEOTEXTILE FOR EMBANKMENT STABILIZATION PARALLEL TO EMBANKMENT CENTERLINE ON THE EXISTING GROUND FROM STA. 18+45.00± -L- TO STA. 18+65± -L-.
3. PLACE 2 FT. OF SELECT GRANULAR MATERIAL ON THE GEOTEXTILE FOR EMBANKMENT STABILIZATION. FOR SELECT GRANULAR MATERIAL, SEE SECTION 265 OF THE STANDARD SPECIFICATIONS.
4. PLACE THE GEOTEXTILE WITHOUT ANY WRINKLES OR CREASES.
5. NO SEAMS OR JOINTS ARE ALLOWED IN THE MACHINE DIRECTION OF THE GEOTEXTILE.
6. GEOTEXTILE FOR EMBANKMENT STABILIZATION MUST HAVE A CONTINUOUS MINIMUM LENGTH AS SHOWN ON PLAN.
7. THE TERMS ROLL AND MACHINE DIRECTION ARE USED INTERCHANGEABLY.
8. ALL JOINTS IN THE CROSS MACHINE DIRECTION MUST BE EITHER OVERLAPPED A MINIMUM OF 18 INCHES OR SEWN BY AN APPROVED METHOD TO DEVELOP THE REQUIRED SEAM STRENGTH.
9. FOR GEOTEXTILE FOR EMBANKMENT STABILIZATION, SEE GEOTEXTILE FOR EMBANKMENT STABILIZATION SPECIAL PROVISION.
10. FOR EMBANKMENT SETTLEMENT GAUGE, SEE GEOTECHNICAL STANDARD DRAWING NO. 1804.01 - STANDARD EMBANKMENT MONITORING.
11. PLACE AND MAINTAIN SURCHARGE AT LOCATIONS SHOWN IN THIS PLAN. OBSERVE 45 DAYS OF WAITING PERIOD AND REMOVE THE SURCHARGE AS DIRECTED BY THE ENGINEER.
12. FOR SURCHARGE AND WAITING PERIODS, SEE SURCHARGES AND WAITING PERIODS PROVISION.

QUANTITIES	
GEOTEXTILE FOR EMBANKMENT STABILIZATION	160 SY*
SELECT GRANULAR MATERIAL	110 CY
BORROW EXCAVATION	300 CY
UNCLASSIFIED EXCAVATION	300 CY

* GEOTEXTILE FOR EMBANKMENT STABILIZATION ESTIMATED QUANTITY DOES NOT INCLUDE OVERAPS OR WASTE.

PREPARED BY: J. PARK	DATE: 02 / 2014
REVIEWED BY: J. BATTS	DATE: 02 / 2014

GEOTECHNICAL ENGINEERING UNIT

☒ EASTERN REGIONAL OFFICE
☐ WESTERN REGIONAL OFFICE
☐ CONTRACT OFFICE

STATE OF NORTH CAROLINA DEPARTMENT OF TRANSPORTATION RALEIGH

GEOTEXTILE FOR EMBANKMENT STABILIZATION DETAILS

REVISIONS

NO.	BY	DATE	NO.	BY	DATE
1	SZHANG	09/2014	3		
2			4		