PROJECT REFERENCE NO.	SHEET
B-5325	2G-2

GEOTECHNICAL ENGINEER

NORTH CAROLINA PROFESSIONAL SEAL 32171 ENGINEER JINYOUNG PARK

DocuSigned by: A713DB5C9A4F0E... 7/29/2014

SIGNATURE DATE

ENGINEER

SIGNATURE DATE

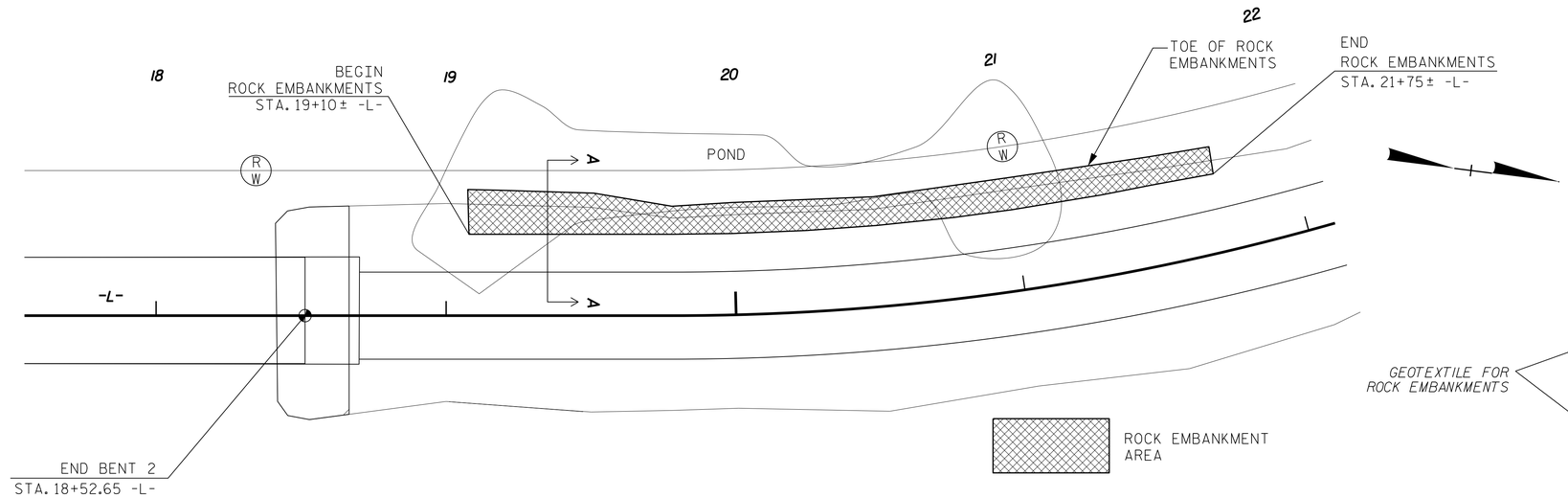

PLAN VIEW FOR LIMITS OF ROCK EMBANKMENTS

N.T.S.

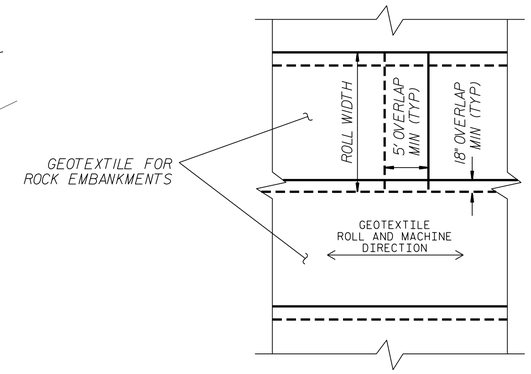

GEOTEXTILE FOR ROCK EMBANKMENTS OVERLAP DETAIL

(PLAN VIEW)

ESTIMATED QUANTITIES	
ROCK EMBANKMENTS	150 TONS
#57 STONE	110 TONS
GEOTEXTILE FOR ROCK EMBANKMENTS	190 SY

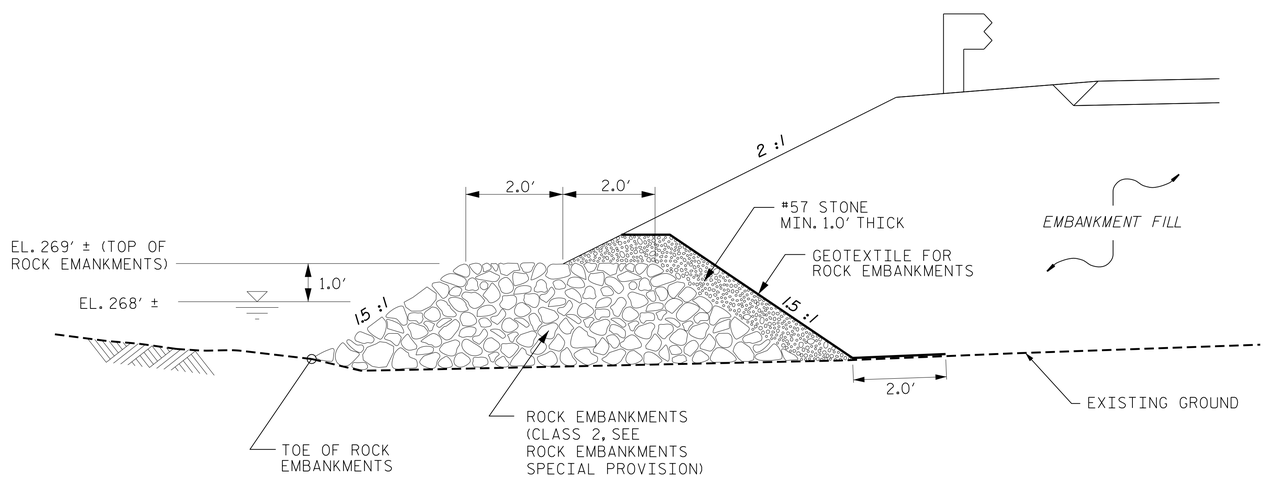

ROCK EMBANKMENTS – TYPICAL SECTION A–A

N.T.S.

NOTES

1. FOR ROCK EMBANKMENTS, SEE ROCK EMBANKMENTS SPECIAL PROVISION.
2. INSTALL ROCK EMBANKMENTS TO ELEVATION 269 FT. OR 1 FT. ABOVE WATER.
3. THE ESTIMATED QUANTITIES OF ROCK EMBANKMENTS INCLUDE ADDITIONAL TONNAGE FOR THE ANTICIPATED SETTLEMENT OF ROCK EMBANKMENTS.
4. THE ESTIMATED QUANTITIES OF #57 STONE INCLUDE ADDITIONAL TONNAGE FOR FILLING OF GAPS BETWEEN CLASS 2.

PREPARED BY: J. PARK	DATE: 02 / 2014
REVIEWED BY: J. BATTS	DATE: 02 / 2014

GEOTECHNICAL ENGINEERING UNIT

☒ EASTERN REGIONAL OFFICE
☐ WESTERN REGIONAL OFFICE
☐ CONTRACT OFFICE

STATE OF NORTH CAROLINA
DEPARTMENT OF TRANSPORTATION
RALEIGH

ROCK EMBANKMENT DETAILS

REVISIONS

NO.	BY	DATE	NO.	BY	DATE
1			3		
2			4		