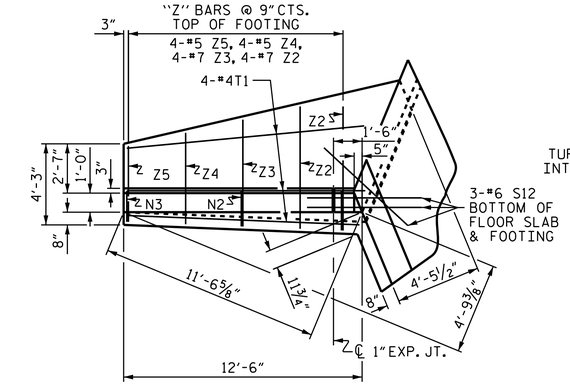


PLAN - W3

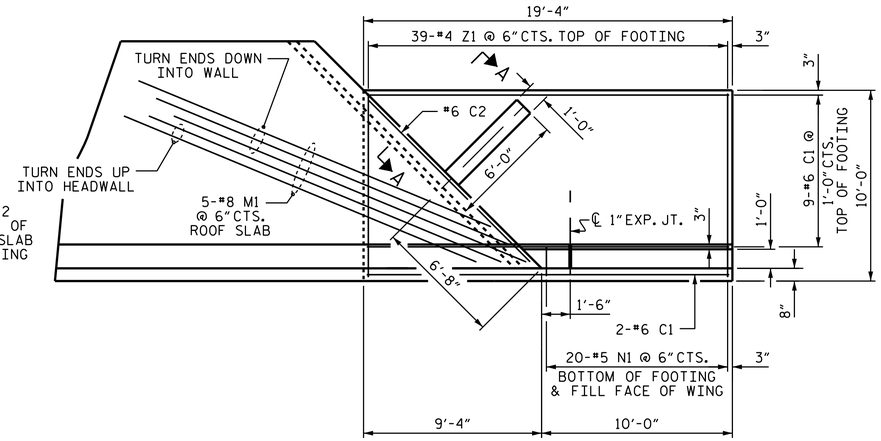


PLAN - W4

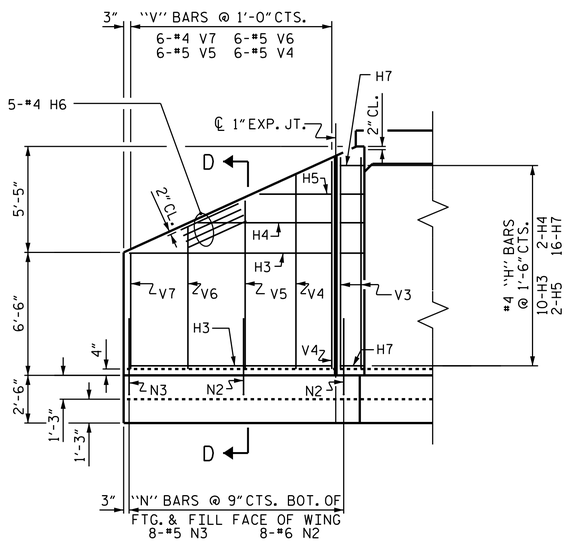


ELEVATION - W3

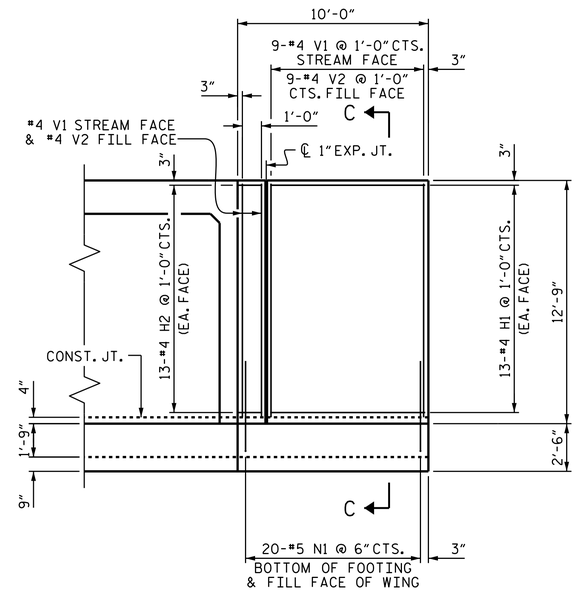


ELEVATION - W4

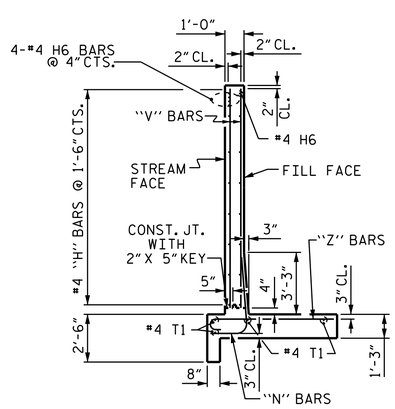


SECTION D-D

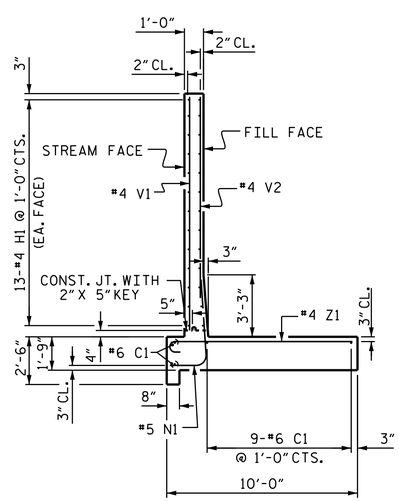


SECTION C-C

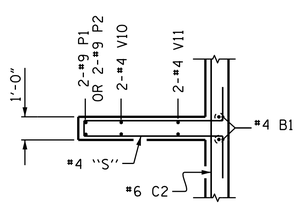


SECTION B-B

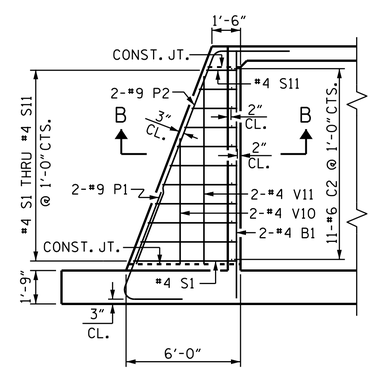


SECTION A-A

STANDARD BARREL AND FOOTING
REINFORCING STEEL NOT SHOWN

## BAR TYPES

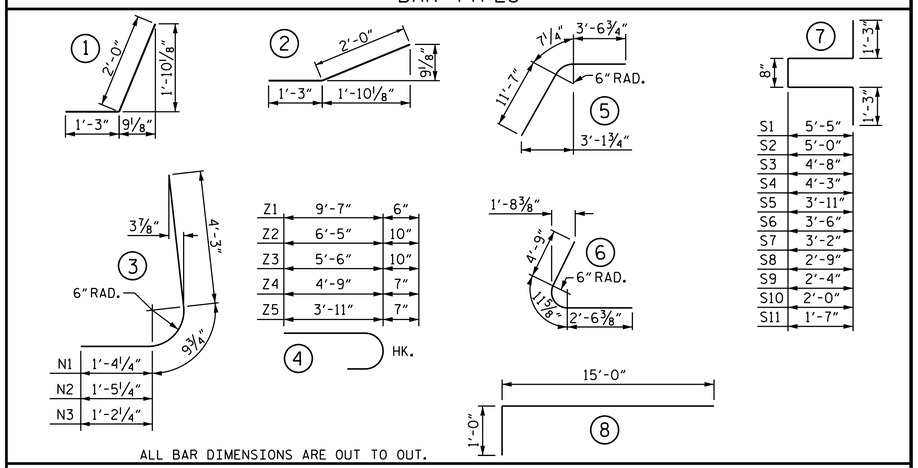


ALL BAR DIMENSIONS ARE OUT TO OUT.

## BILL OF MATERIAL

### STAGE I - WING W3

| BAR | NO. | SIZE | TYPE | LENGTH | WEIGHT |
|---|---|---|---|---|---|
| H3 | 10 | #4 | STR | 10'-7" | 71 |
| H4 | 2 | #4 | STR | 7'-1" | 9 |
| H5 | 2 | #4 | STR | 3'-9" | 5 |
| H6 | 5 | #4 | STR | 11'-7" | 39 |
| H7 | 16 | #4 | 1 | 3'-3" | 35 |
| N2 | 8 | #6 | 3 | 6'-6" | 78 |
| N3 | 8 | #5 | 3 | 6'-3" | 52 |
| S12 | 3 | #6 | STR | 6'-0" | 27 |
| T1 | 4 | #4 | STR | 12'-6" | 33 |
| V3 | 4 | #5 | STR | 11'-0" | 46 |
| V4 | 6 | #5 | STR | 9'-11" | 62 |
| V5 | 6 | #5 | STR | 8'-7" | 54 |
| V6 | 6 | #5 | STR | 7'-4" | 46 |
| V7 | 6 | #4 | STR | 6'-1" | 24 |
| Z2 | 4 | #7 | 4 | 7'-3" | 59 |
| Z3 | 4 | #7 | 4 | 6'-4" | 52 |
| Z4 | 4 | #5 | 4 | 5'-4" | 22 |
| Z5 | 4 | #5 | 4 | 4'-6" | 19 |
| REINFORCING STEEL | | | | LBS. | 733 |

| | | |
|---|---|---|
| CLASS A CONCRETE | | |
| WING W3 | C.Y. | 9.0 |
| END CURTAIN WALL | C.Y. | 1.5 |
| TOTAL | C.Y. | 10.5 |

### STAGE II - WING W4

| BAR | NO. | SIZE | TYPE | LENGTH | WEIGHT |
|---|---|---|---|---|---|
| B1 | 2 | #4 | STR | 13'-0" | 17 |
| C1 | 11 | #6 | STR | 19'-0" | 314 |
| C2 | 11 | #6 | STR | 12'-0" | 198 |
| H1 | 26 | #4 | STR | 8'-1" | 140 |
| H2 | 26 | #4 | 2 | 4'-0" | 69 |
| M1 | 5 | #8 | 8 | 16'-0" | 214 |
| N1 | 20 | #5 | 3 | 6'-5" | 134 |
| P1 | 2 | #9 | 6 | 8'-3" | 56 |
| P2 | 2 | #9 | 5 | 15'-9" | 107 |
| S1 | 1 | #4 | 7 | 14'-0" | 9 |
| S2 | 1 | #4 | 7 | 13'-2" | 9 |
| S3 | 1 | #4 | 7 | 12'-6" | 8 |
| S4 | 1 | #4 | 7 | 11'-8" | 8 |
| S5 | 1 | #4 | 7 | 11'-0" | 7 |
| S6 | 1 | #4 | 7 | 10'-2" | 7 |
| S7 | 1 | #4 | 7 | 9'-6" | 6 |
| S8 | 1 | #4 | 7 | 8'-8" | 6 |
| S9 | 1 | #4 | 7 | 7'-10" | 5 |
| S10 | 1 | #4 | 7 | 7'-2" | 5 |
| S11 | 1 | #4 | 7 | 6'-4" | 4 |
| V1 | 11 | #4 | STR | 12'-3" | 90 |
| V2 | 11 | #4 | STR | 10'-2" | 75 |
| V10 | 2 | #4 | STR | 6'-7" | 9 |
| V11 | 2 | #4 | STR | 9'-10" | 13 |
| Z1 | 39 | #4 | 4 | 10'-1" | 263 |

| | | |
|---|---|---|
| REINFORCING STEEL | LBS. | 1,773 |
| CLASS A CONCRETE | | |
| WING W4 | C.Y. | 17.8 |
| COUNTERFORT | C.Y. | 1.3 |
| END CURTAIN WALL | C.Y. | 0.1 |
| HEADWALL | C.Y. | 1.8 |
| TOTAL | C.Y. | 21.0 |

PROJECT NO. U-2579B
FORSYTH COUNTY
STATION: 45+65.43 -Y4-

SHEET 7 OF 7

STATE OF NORTH CAROLINA
DEPARTMENT OF TRANSPORTATION
RALEIGH

# WINGS FOR CONCRETE BOX CULVERT

H = 11'-0" 45° SKEW SLOPE = 2:1
RIGHT EXTENSION

NORTH CAROLINA PROFESSIONAL SEAL 23371 ENGINEER VIPUL A. PATEL

DocuSigned by: Vipul A. Patel
339B086CBE1C486...
8/8/2014

| REVISIONS | | | | | | SHEET NO. |
|---|---|---|---|---|---|---|
| NO. | BY: | DATE: | NO. | BY: | DATE: | C-30 |
| 1 | | | 3 | | | TOTAL SHEETS |
| 2 | | | 4 | | | 30 |

STR. #23

| | | | |
|---|---|---|---|
| DRAWN BY : | H. A. LOCKLEAR | DATE : | 5/22/14 |
| CHECKED BY : | T. H. CARROLL | DATE : | 5/27/14 |
| DESIGN ENGINEER OF RECORD: | H. A. LOCKLEAR | DATE : | 6/10/14 |

08-AUG-2014 11:19
R:\Structures\Plans\Culverts\U2579B_SD_CU_23.dgn
lsutton