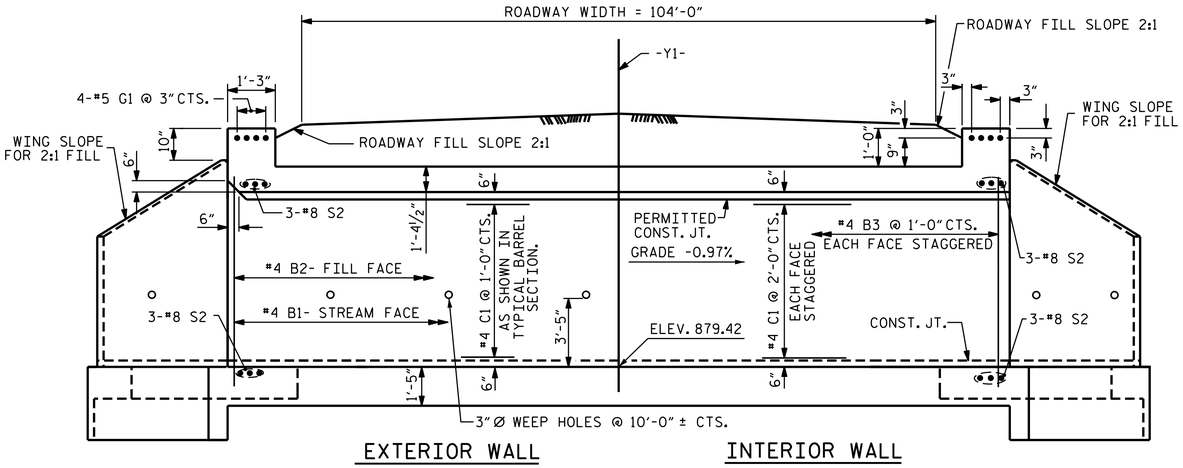


## CULVERT SECTION NORMAL TO ROADWAY

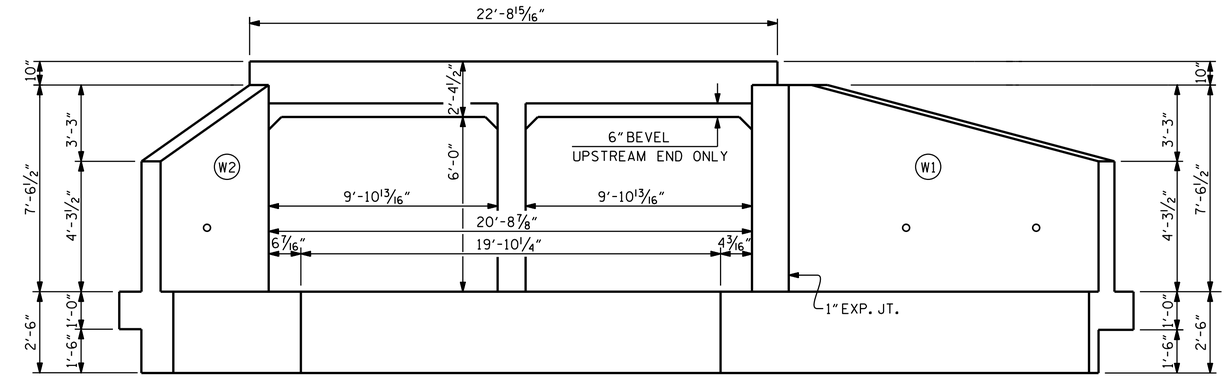


## END ELEVATION NORMAL TO SKEW

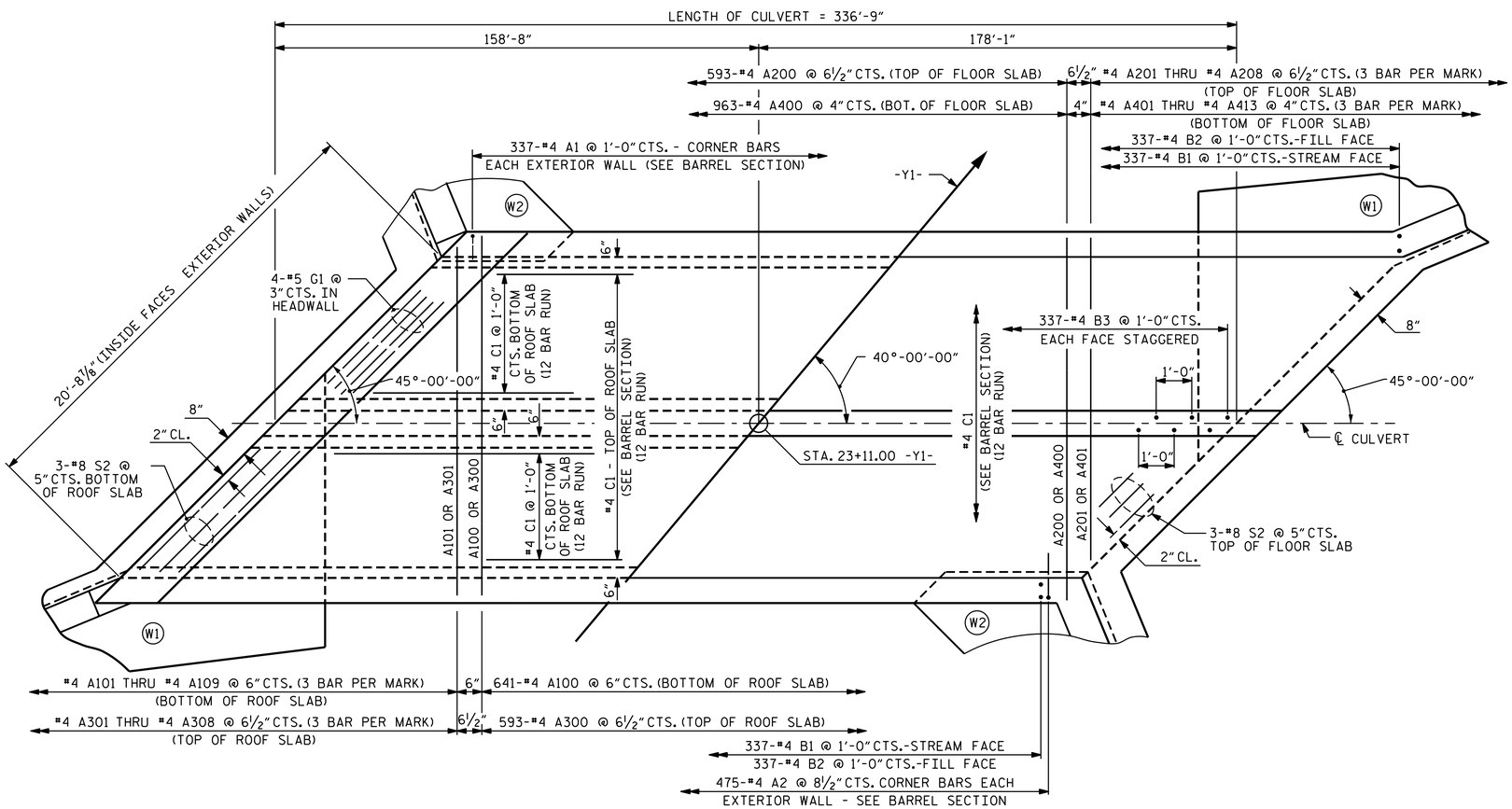


## PART PLAN - ROOF SLAB

## PART PLAN - FLOOR SLAB

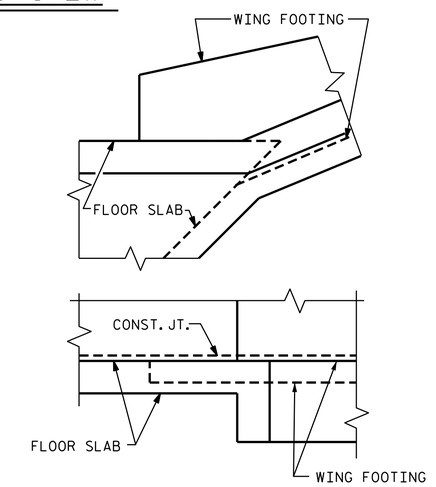


## CONNECTION OF WING FOOTING AND FLOOR SLAB

PROJECT NO. U-2579B
FORSYTH COUNTY
STATION: 23+11.00 -Y1-

SHEET 2 OF 5

STATE OF NORTH CAROLINA
DEPARTMENT OF TRANSPORTATION
RALEIGH

BARREL STANDARD
DOUBLE 7 FT. X 6 FT.
CONCRETE BOX CULVERT
40°-00'-00" SKEW

NORTH CAROLINA PROFESSIONAL SEAL 23371 ENGINEER VIPUL A. PATEL

DocuSigned by: Vipul A. Patel 339B086CBE1C4A8... 8/8/2014

| REVISIONS | | | | | | | | SHEET NO. |
|---|---|---|---|---|---|---|---|---|
| NO. | BY: | DATE: | NO. | BY: | DATE: | | | C-20 |
| 1 | | | 3 | | | | | TOTAL SHEETS |
| 2 | | | 4 | | | | | 30 |

STR. #22 STD. NO. CB42

ASSEMBLED BY : J. G. KHARVA DATE : 3/22/13
CHECKED BY : T. H. CARROLL DATE : 4/17/13
DRAWN BY : DANNY SHERROD DATE : 4-72
CHECKED BY : HASON A. JUDEH DATE : 4-72

SPECIAL STANDARD

DESIGN ENGINEER OF RECORD:
R. L. CHESSON DATE : 6/10/14

05-AUG-2014 12:46
R:\Structures\Plans\Culverts\U2579B_SD_CU_22.dgn
lsutton

REVISED 11-19-99 BY M.M. CHECKED BY R.W.W.
REDRAWN : D.P.D. 11-90 CHECKED BY : E.L.R. 11-2-90