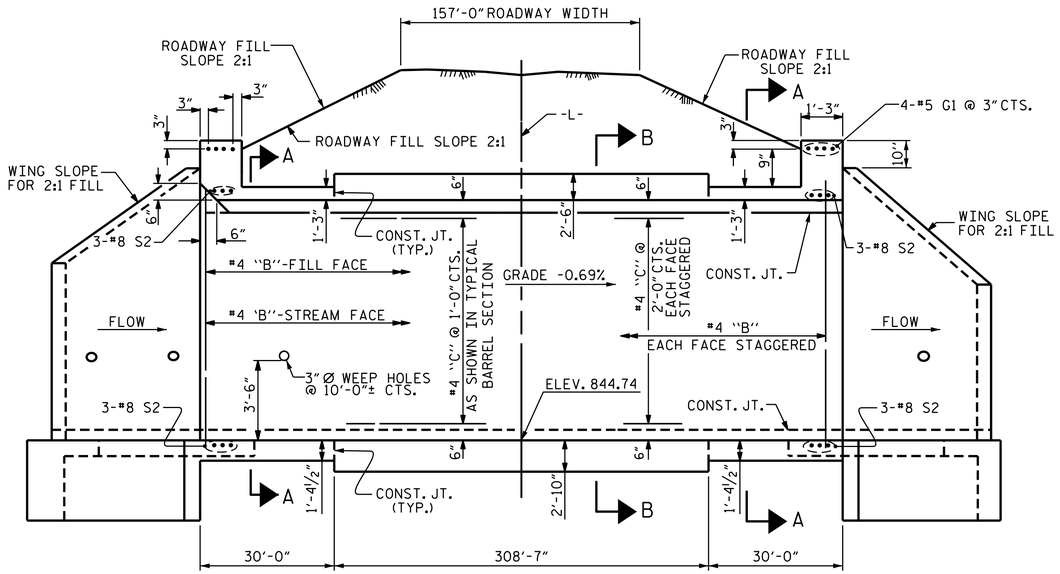


CULVERT SECTION NORMAL TO ROADWAY

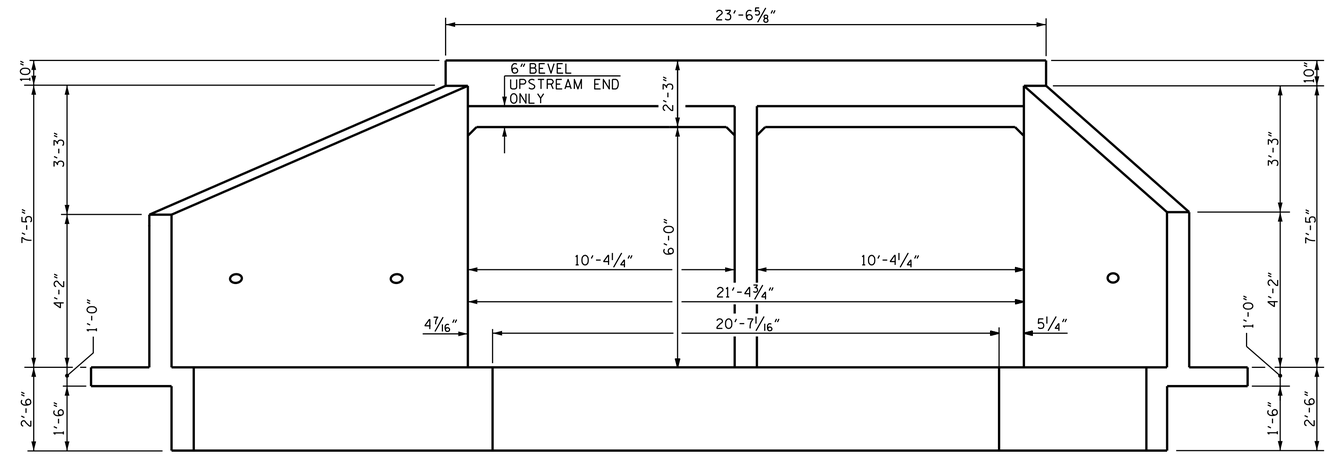


END ELEVATION - NORMAL TO SKEW

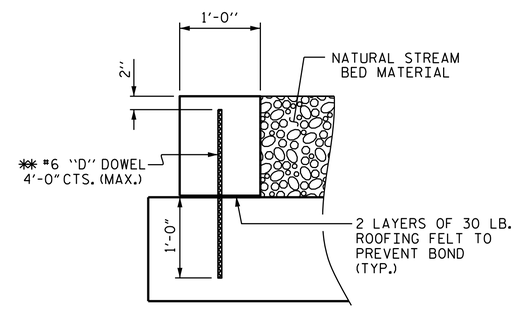


SECTION

** DOWELS MAY BE PUSHED INTO GREEN CONCRETE AFTER SLAB HAS BEEN FLOAT FINISHED.

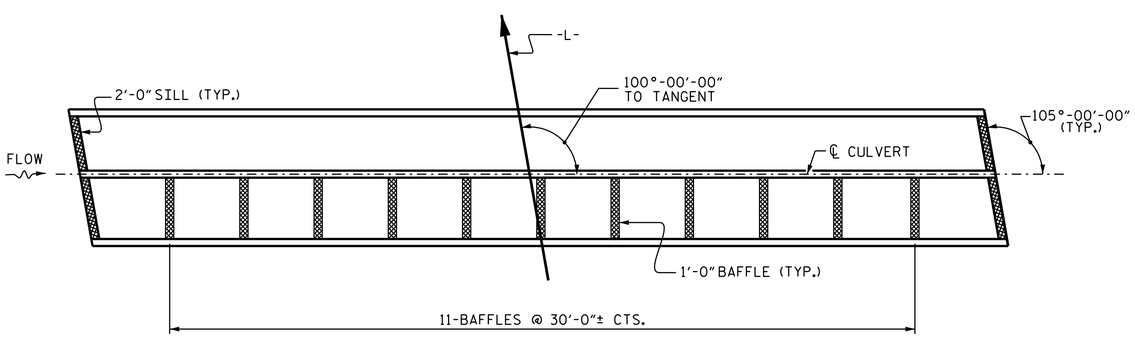


PLAN VIEW SHOWING SILL/BAFFLE LOCATIONS

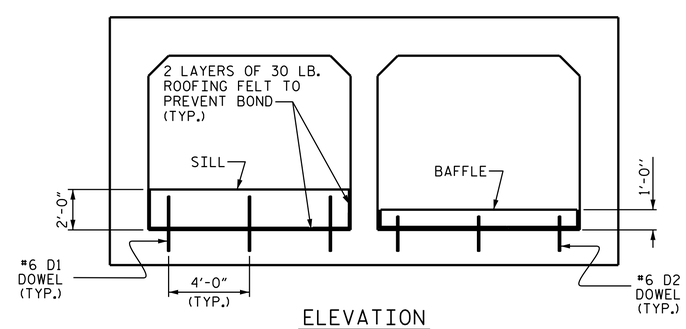


ELEVATION

SILL/BAFFLE DETAILS

(LOOKING DOWN STREAM)

PROJECT NO. U-2579B

FORSYTH COUNTY

STATION: 559+74.00 -L-

SHEET 2 OF 8

STATE OF NORTH CAROLINA
DEPARTMENT OF TRANSPORTATION
RALEIGH

BARREL STANDARD

DOUBLE 10 FT. X 6 FT. CONCRETE BOX CULVERT 100° SKEW

| REVISIONS | | | | | | SHEET NO. |
|---|---|---|---|---|---|---|
| NO. | BY: | DATE: | NO. | BY: | DATE: | C-2 |
| 1 | | | 3 | | | TOTAL SHEETS |
| 2 | | | 4 | | | 30 |

STR. #19

STD. NO. CB222

NORTH CAROLINA PROFESSIONAL SEAL 29048 ENGINEER RAMAN P. PATEL

DocuSigned by: Raman Patel 60F537B5DA1F41D... 8/5/2014

REVISED 11-19-99 BY M.M. CHECKED BY R.W.W.
REVISED 8-28-92 BY E.L.R. CHECKED BY G.R.P.
REDRAWN 11-90 BY A.R.B. CHECKED BY C.R.K.

ASSEMBLED BY : R. P. PATEL DATE : 10-31-13
CHECKED BY : J. P. MCCARTHA DATE : 11-8-13

DRAWN BY : W. BRYAN STANLEY II DATE : NOV.1971
CHECKED BY : JOEL A. JOHNSON DATE : DEC.1971

SPECIAL

STANDARD

DESIGN ENGINEER OF RECORD: R. P. PATEL DATE : 4-29-14

04-AUG-2014 16:44
R:\Structures\Plans\Culverts\U2579B_SD_CU_19.dgn
lsutton