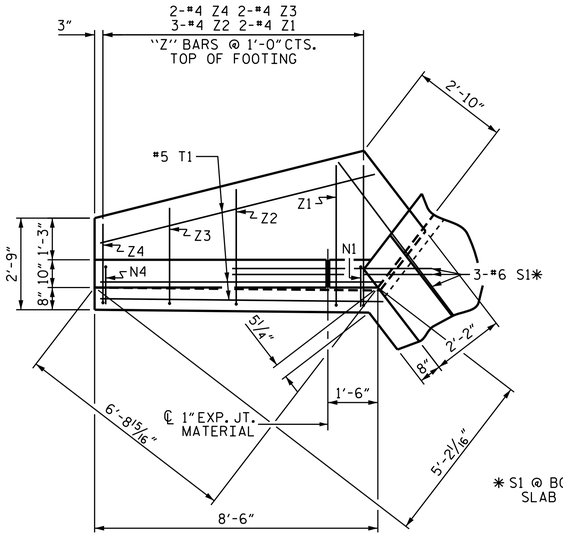


PLAN W2

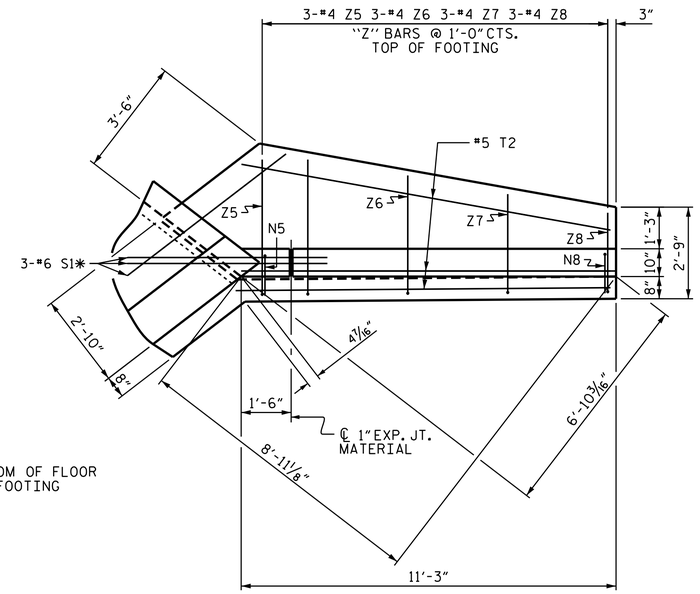


PLAN W1

* S1 @ BOTTOM OF FLOOR SLAB & FOOTING

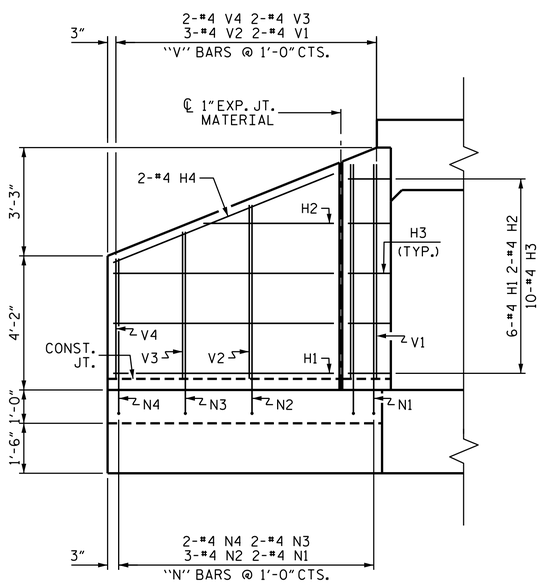


ELEVATION W2

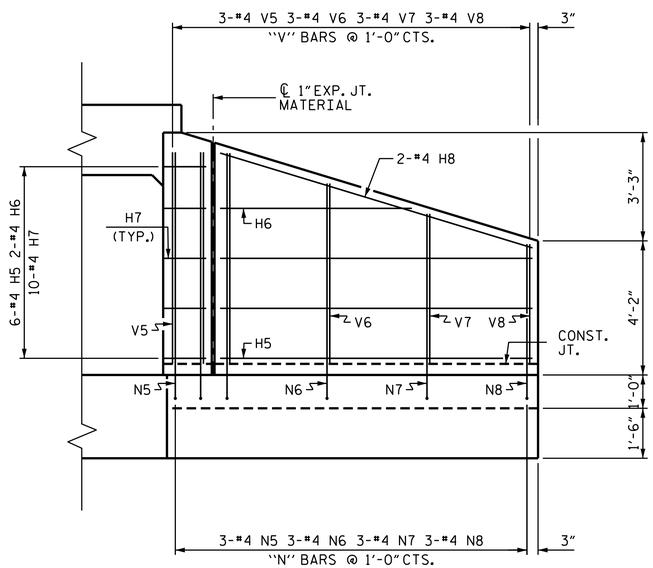


ELEVATION W1

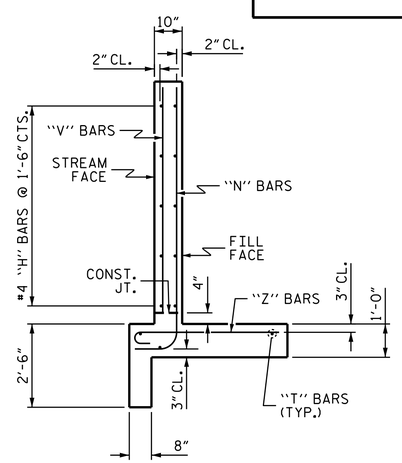


TYPICAL WING SECTION

## BAR TYPES

ALL BAR DIMENSIONS ARE OUT TO OUT.

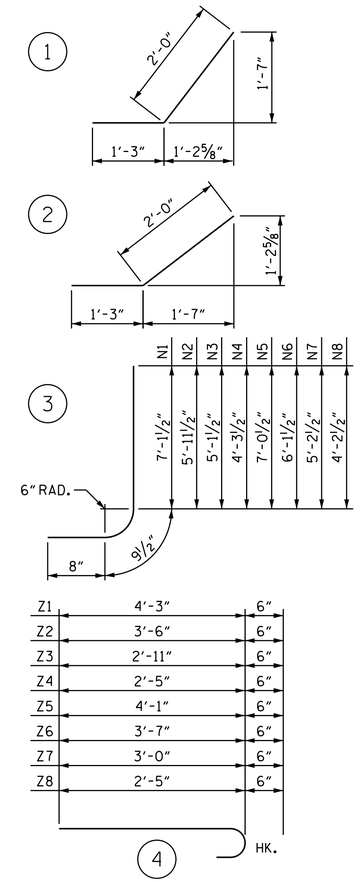


## BILL OF MATERIAL

| BAR | NO. | SIZE | TYPE | LENGTH | WEIGHT |
|---|---|---|---|---|---|
| H1 | 12 | #4 | STR | 6'-7" | 53 |
| H2 | 4 | #4 | STR | 4'-3" | 11 |
| H3 | 20 | #4 | 1 | 3'-3" | 43 |
| H4 | 4 | #4 | STR | 7'-1" | 19 |
| H5 | 12 | #4 | STR | 9'-4" | 75 |
| H6 | 4 | #4 | STR | 6'-2" | 16 |
| H7 | 20 | #4 | 2 | 3'-3" | 43 |
| H8 | 4 | #4 | STR | 9'-9" | 26 |
| | | | | | |
| N1 | 4 | #4 | 3 | 8'-7" | 23 |
| N2 | 6 | #4 | 3 | 7'-5" | 30 |
| N3 | 4 | #4 | 3 | 6'-7" | 18 |
| N4 | 4 | #4 | 3 | 5'-9" | 15 |
| N5 | 6 | #4 | 3 | 8'-6" | 34 |
| N6 | 6 | #4 | 3 | 7'-7" | 30 |
| N7 | 6 | #4 | 3 | 6'-8" | 27 |
| N8 | 6 | #4 | 3 | 5'-8" | 23 |
| | | | | | |
| S1 | 12 | #6 | STR | 6'-0" | 108 |
| | | | | | |
| T1 | 6 | #5 | STR | 8'-6" | 53 |
| T2 | 6 | #5 | STR | 11'-3" | 70 |
| | | | | | |
| V1 | 4 | #4 | STR | 6'-6" | 17 |
| V2 | 6 | #4 | STR | 5'-4" | 21 |
| V3 | 4 | #4 | STR | 4'-6" | 12 |
| V4 | 4 | #4 | STR | 3'-9" | 10 |
| V5 | 6 | #4 | STR | 6'-5" | 26 |
| V6 | 6 | #4 | STR | 5'-6" | 22 |
| V7 | 6 | #4 | STR | 4'-7" | 18 |
| V8 | 6 | #4 | STR | 3'-8" | 15 |
| | | | | | |
| Z1 | 4 | #4 | 4 | 4'-9" | 13 |
| Z2 | 6 | #4 | 4 | 4'-0" | 16 |
| Z3 | 4 | #4 | 4 | 3'-5" | 9 |
| Z4 | 4 | #4 | 4 | 2'-11" | 8 |
| Z5 | 6 | #4 | 4 | 4'-7" | 18 |
| Z6 | 6 | #4 | 4 | 4'-1" | 16 |
| Z7 | 6 | #4 | 4 | 3'-6" | 14 |
| Z8 | 6 | #4 | 4 | 2'-11" | 12 |

| | | |
|---|---|---|
| REINFORCING STEEL FOR 4 WINGS | LBS. | 964 |
| CLASS A CONCRETE | | |
| 4 WINGS | C.Y. | 14.7 |
| 2 HEADWALLS | C.Y. | 2.2 |
| 2 END CURTAIN WALLS | C.Y. | 2.5 |
| TOTAL | C.Y. | 19.4 |

PROJECT NO. U-2579B

FORSYTH COUNTY

STATION: 559+74.00 -L-

SHEET 6 OF 8

STATE OF NORTH CAROLINA
DEPARTMENT OF TRANSPORTATION
RALEIGH

# WINGS FOR CONCRETE BOX CULVERT

H = 6'-0" SLOPE = 2:1
105° SKEW

NORTH CAROLINA PROFESSIONAL SEAL 23371 ENGINEER VIPUL A. PATEL

DocuSigned by: Vipul A. Patel 338B086CBE1C486... 8/8/2014

| REVISIONS | | | | | | | | SHEET NO. |
|---|---|---|---|---|---|---|---|---|
| NO. | BY: | DATE: | NO. | BY: | DATE: | | | C-6 |
| 1 | | | 3 | | | | | TOTAL SHEETS |
| 2 | | | 4 | | | | | 30 |

STR. #19

| | | | |
|---|---|---|---|
| DRAWN BY : | T. H. CARROLL | DATE : | 5-19-14 |
| CHECKED BY : | M. E. GILES | DATE : | 5-28-14 |
| DESIGN ENGINEER OF RECORD: | V. A. PATEL | DATE : | 6-10-14 |

05-AUG-2014 13:27
R:\Structures\Plans\Culverts\U2579B_SD_CU_19.dgn
lsutton