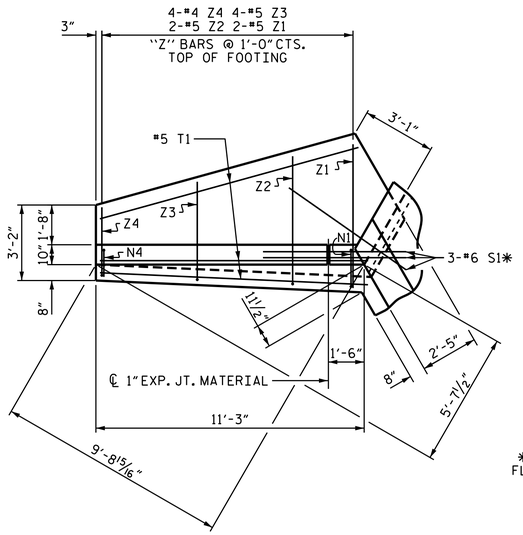


PLAN W2

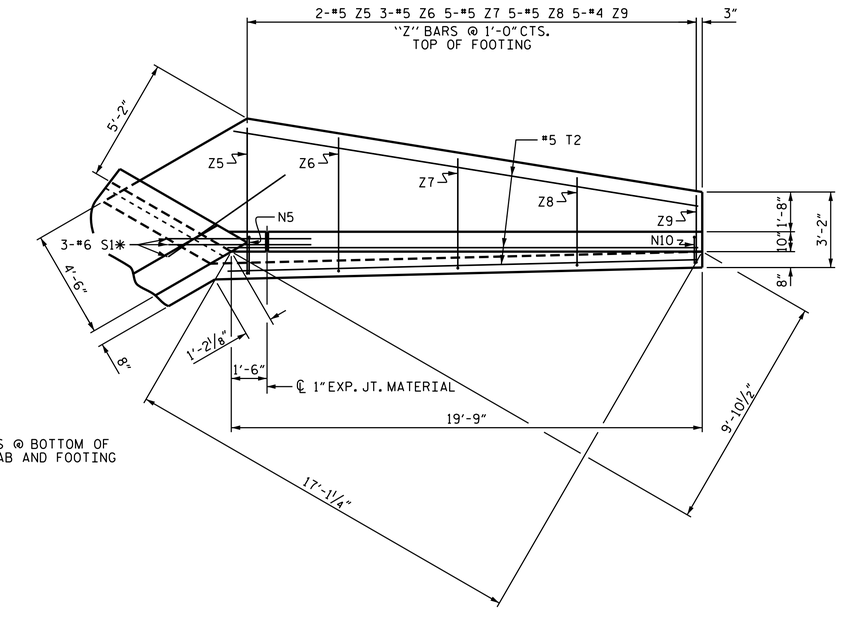


PLAN W1

* S1 BARS @ BOTTOM OF FLOOR SLAB AND FOOTING

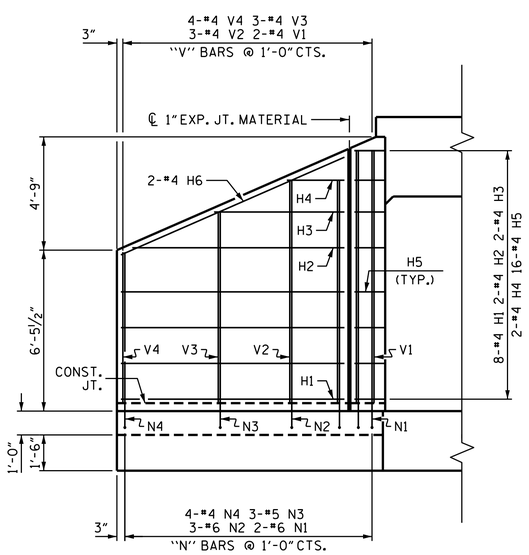


ELEVATION W2

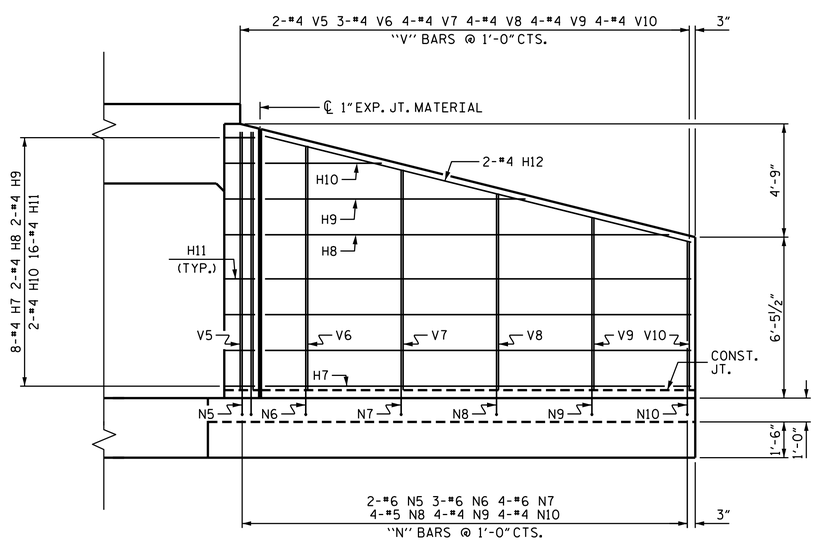


ELEVATION W1

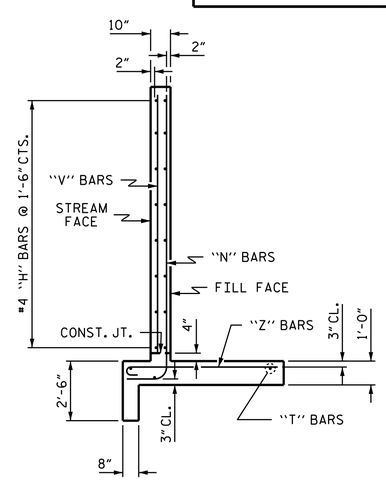


TYPICAL WING SECTION

## BAR TYPES

ALL BAR DIMENSIONS ARE OUT TO OUT.

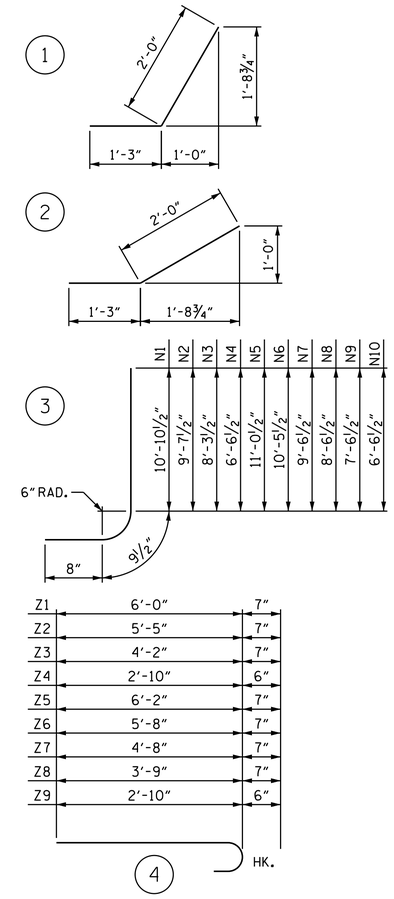


## BILL OF MATERIAL

| BAR | NO. | SIZE | TYPE | LENGTH | WEIGHT |
|---|---|---|---|---|---|
| H1 | 16 | #4 | STR | 9'-4" | 100 |
| H2 | 4 | #4 | STR | 9'-0" | 24 |
| H3 | 4 | #4 | STR | 5'-7" | 15 |
| H4 | 4 | #4 | STR | 2'-2" | 6 |
| H5 | 32 | #4 | 1 | 3'-3" | 69 |
| H6 | 4 | #4 | STR | 10'-2" | 27 |
| H7 | 16 | #4 | STR | 17'-10" | 191 |
| H8 | 4 | #4 | STR | 17'-2" | 46 |
| H9 | 4 | #4 | STR | 11'-1" | 30 |
| H10 | 4 | #4 | STR | 5'-1" | 14 |
| H11 | 32 | #4 | 2 | 3'-3" | 69 |
| H12 | 4 | #4 | STR | 18'-5" | 49 |
| | | | | | |
| N1 | 4 | #6 | 3 | 12'-4" | 74 |
| N2 | 6 | #6 | 3 | 11'-1" | 100 |
| N3 | 6 | #5 | 3 | 9'-9" | 61 |
| N4 | 8 | #4 | 3 | 8'-0" | 43 |
| N5 | 4 | #6 | 3 | 12'-6" | 75 |
| N6 | 6 | #6 | 3 | 11'-11" | 107 |
| N7 | 8 | #6 | 3 | 11'-0" | 132 |
| N8 | 8 | #5 | 3 | 10'-0" | 83 |
| N9 | 8 | #4 | 3 | 9'-0" | 48 |
| N10 | 8 | #4 | 3 | 8'-0" | 43 |
| | | | | | |
| S1 | 12 | #6 | STR | 6'-0" | 108 |
| | | | | | |
| T1 | 6 | #5 | STR | 11'-3" | 70 |
| T2 | 6 | #5 | STR | 19'-9" | 124 |
| | | | | | |
| V1 | 4 | #4 | STR | 10'-3" | 27 |
| V2 | 6 | #4 | STR | 9'-0" | 36 |
| V3 | 6 | #4 | STR | 7'-8" | 31 |
| V4 | 8 | #4 | STR | 6'-0" | 32 |
| V5 | 4 | #4 | STR | 10'-6" | 28 |
| V6 | 6 | #4 | STR | 9'-11" | 40 |
| V7 | 8 | #4 | STR | 8'-11" | 48 |
| V8 | 8 | #4 | STR | 7'-11" | 42 |
| V9 | 8 | #4 | STR | 6'-11" | 37 |
| V10 | 8 | #4 | STR | 5'-11" | 32 |
| | | | | | |
| Z1 | 4 | #5 | 4 | 6'-7" | 27 |
| Z2 | 4 | #5 | 4 | 6'-0" | 25 |
| Z3 | 8 | #5 | 4 | 4'-9" | 40 |
| Z4 | 8 | #4 | 4 | 3'-4" | 18 |
| Z5 | 4 | #5 | 4 | 6'-9" | 28 |
| Z6 | 6 | #5 | 4 | 6'-3" | 39 |
| Z7 | 10 | #5 | 4 | 5'-3" | 55 |
| Z8 | 10 | #5 | 4 | 4'-4" | 45 |
| Z9 | 10 | #4 | 4 | 3'-4" | 22 |

REINFORCING STEEL FOR 4 WINGS 2360 LBS.

CLASS A CONCRETE
- 4 WINGS 32.5 C.Y.
- 2 HEADWALLS 3.6 C.Y.
- 2 END CURTAIN WALLS 4.2 C.Y.
- TOTAL 40.3 C.Y.

PROJECT NO. U-2579B
FORSYTH COUNTY
STATION: 616+45.00 -L-

SHEET 4 OF 5

STATE OF NORTH CAROLINA
DEPARTMENT OF TRANSPORTATION
RALEIGH

# WINGS FOR CONCRETE BOX CULVERT

H = 9'-0" SLOPE = 2:1
60° OR 120° SKEW

NORTH CAROLINA PROFESSIONAL SEAL 23371 ENGINEER VIPUL A. PATEL

DocuSigned by: Vipul A. Patel 339B086CBE1C488... 8/8/2014

| REVISIONS | | | | | | | | SHEET NO. |
|---|---|---|---|---|---|---|---|---|
| NO. | BY: | DATE: | NO. | BY: | DATE: | | | C-12 |
| 1 | | | 3 | | | | | TOTAL SHEETS |
| 2 | | | 4 | | | | | 30 |

STR. #20

| | | | |
|---|---|---|---|
| DRAWN BY : | T. H. CARROLL | DATE : | 5/19/14 |
| CHECKED BY : | M. E. GILES | DATE : | 5/28/14 |
| DESIGN ENGINEER OF RECORD: | V. A. PATEL | DATE : | 6/10/14 |

04-AUG-2014 17:05
R:\Structures\Plans\Culverts\U2579B_SD_CU_20.dgn
lsutton