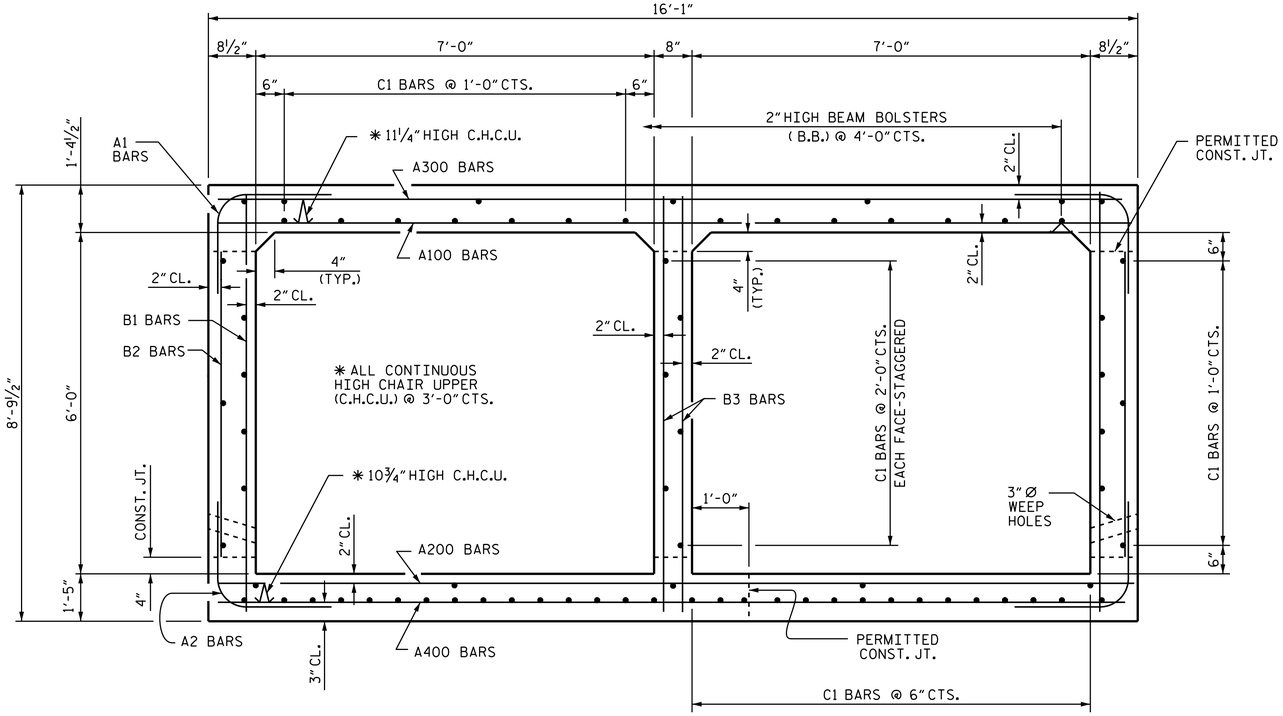


## RIGHT ANGLE SECTION OF BARREL

THERE ARE 74 "C" BARS IN SECTION OF BARREL.

## BAR TYPE

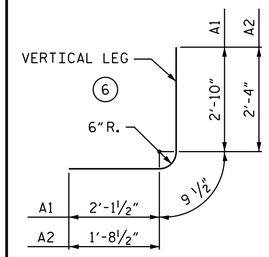


BAR DIMENSIONS ARE OUT TO OUT

## BILL OF MATERIAL

| BAR | NO. | SIZE | TYPE | LENGTH | WEIGHT |
|---|---|---|---|---|---|
| A1 | 674 | #4 | 6 | 5'-9" | 2589 |
| A2 | 950 | #4 | 6 | 4'-10" | 3067 |
| | | | | | |
| A100 | 641 | #4 | STR | 15'-8" | 6708 |
| A101 | 6 | #4 | STR | 14'-5" | 58 |
| A102 | 6 | #4 | STR | 12'-11" | 52 |
| A103 | 6 | #4 | STR | 11'-5" | 46 |
| A104 | 6 | #4 | STR | 9'-11" | 40 |
| A105 | 6 | #4 | STR | 8'-5" | 34 |
| A106 | 6 | #4 | STR | 6'-11" | 28 |
| A107 | 6 | #4 | STR | 5'-5" | 22 |
| A108 | 6 | #4 | STR | 3'-11" | 16 |
| A109 | 6 | #4 | STR | 2'-5" | 10 |
| | | | | | |
| A200 | 593 | #4 | STR | 15'-8" | 6206 |
| A201 | 6 | #4 | STR | 14'-0" | 56 |
| A202 | 6 | #4 | STR | 12'-5" | 50 |
| A203 | 6 | #4 | STR | 10'-9" | 43 |
| A204 | 6 | #4 | STR | 9'-2" | 37 |
| A205 | 6 | #4 | STR | 7'-7" | 30 |
| A206 | 6 | #4 | STR | 5'-11" | 24 |
| A207 | 6 | #4 | STR | 4'-3" | 17 |
| A208 | 6 | #4 | STR | 2'-8" | 11 |
| | | | | | |
| A300 | 593 | #4 | STR | 15'-8" | 6206 |
| A301 | 6 | #4 | STR | 14'-0" | 56 |
| A302 | 6 | #4 | STR | 12'-5" | 50 |
| A303 | 6 | #4 | STR | 10'-9" | 43 |
| A304 | 6 | #4 | STR | 9'-2" | 37 |
| A305 | 6 | #4 | STR | 7'-7" | 30 |
| A306 | 6 | #4 | STR | 5'-11" | 24 |
| A307 | 6 | #4 | STR | 4'-3" | 17 |
| A308 | 6 | #4 | STR | 2'-8" | 11 |

| BAR | NO. | SIZE | TYPE | LENGTH | WEIGHT |
|---|---|---|---|---|---|
| A400 | 963 | #4 | STR | 15'-8" | 10078 |
| A401 | 6 | #4 | STR | 14'-7" | 58 |
| A402 | 6 | #4 | STR | 13'-7" | 54 |
| A403 | 6 | #4 | STR | 12'-7" | 50 |
| A404 | 6 | #4 | STR | 11'-7" | 46 |
| A405 | 6 | #4 | STR | 10'-7" | 42 |
| A406 | 6 | #4 | STR | 9'-7" | 38 |
| A407 | 6 | #4 | STR | 8'-7" | 34 |
| A408 | 6 | #4 | STR | 7'-7" | 30 |
| A409 | 6 | #4 | STR | 6'-7" | 26 |
| A410 | 6 | #4 | STR | 5'-7" | 22 |
| A411 | 6 | #4 | STR | 4'-7" | 18 |
| A412 | 6 | #4 | STR | 3'-7" | 14 |
| A413 | 6 | #4 | STR | 2'-7" | 10 |
| | | | | | |
| B1 | 674 | #4 | STR | 8'-4" | 3752 |
| B2 | 674 | #4 | STR | 5'-4" | 2401 |
| B3 | 674 | #4 | STR | 8'-4" | 3752 |
| | | | | | |
| C1 | 888 | #4 | STR | 29'-10" | 17697 |
| | | | | | |
| D1 | 6 | #6 | STR | 2'-10" | 26 |
| D2 | 39 | #6 | STR | 1'-10" | 107 |
| | | | | | |
| G1 | 8 | #5 | STR | 22'-3" | 186 |
| | | | | | |
| S2 | 12 | #8 | STR | 22'-3" | 713 |
| | | | | | |
| REINFORCING STEEL = | | | | LBS. | 64772 |

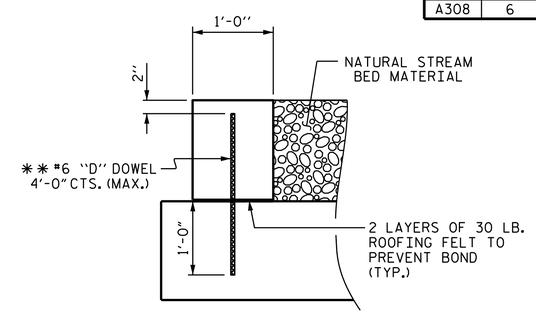


## SECTION THROUGH SILL

✱✱ DOWELS MAY BE PUSHED INTO GREEN CONCRETE AFTER SLAB HAS BEEN FLOAT FINISHED.

## SPLICE LENGTH CHART

| BAR | SIZE | SPLICE LENGTH |
|---|---|---|
| A200 | #4 | 2'-5" |
| A400 | #4 | 1'-9" |
| B1, B3 | #4 | 1'-5" |
| C1 | #4 | 1'-11" |

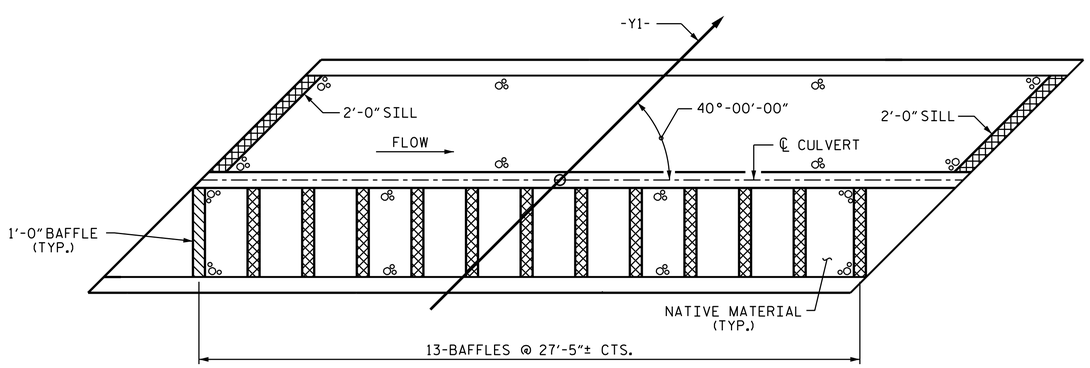


## PLAN

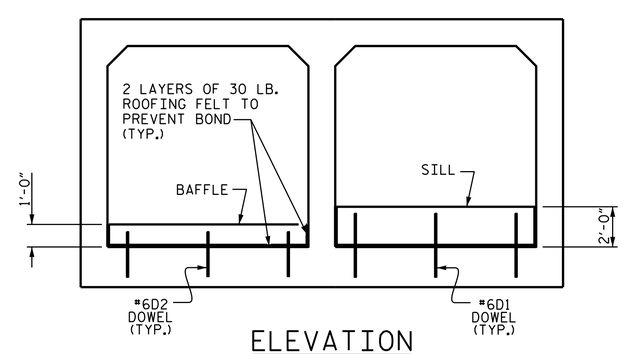


## ELEVATION

(LOOKING UPSTREAM)

## CULVERT SILL/BAFFLE DETAILS

PROJECT NO. U-2579B

FORSYTH COUNTY

STATION: 23+11.00 -Y1-

SHEET 3 OF 5

STATE OF NORTH CAROLINA
DEPARTMENT OF TRANSPORTATION
RALEIGH

# DOUBLE 7 FT. X 6 FT. CONCRETE BOX CULVERT 40°-00'-00" SKEW

NORTH CAROLINA PROFESSIONAL SEAL 23371 ENGINEER VIPUL A. PATEL

DocuSigned by: Vipul A. Patel 339B086CBE1C486... 8/8/2014

| REVISIONS | | | | | | SHEET NO. |
|---|---|---|---|---|---|---|
| NO. | BY: | DATE: | NO. | BY: | DATE: | C-21 |
| 1 | | | 3 | | | TOTAL SHEETS |
| 2 | | | 4 | | | 30 |

STR. #22

DRAWN BY : J. G. KHARVA DATE : 3/22/13
CHECKED BY : T. H. CARROLL DATE : 4/17/13
DESIGN ENGINEER OF RECORD: R. L. CHESSON DATE : 6/10/14

05-AUG-2014 12:46
R:\Structures\Plans\Culverts\U2579B_SD_CU_22.dgn
lsutton