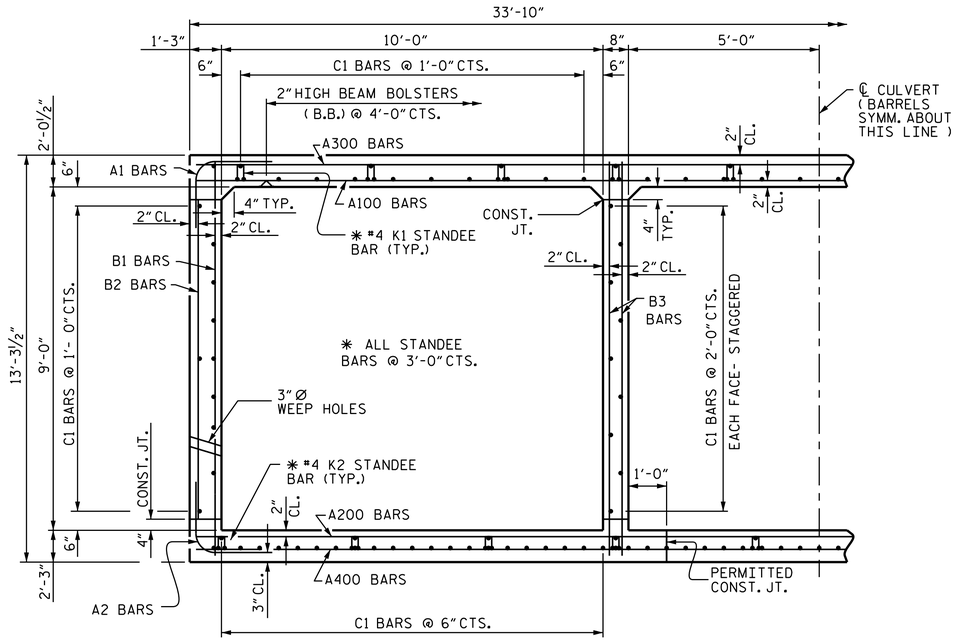


## RIGHT ANGLE SECTION OF BARREL

THERE ARE 151 "C" BARS IN SECTION OF BARREL

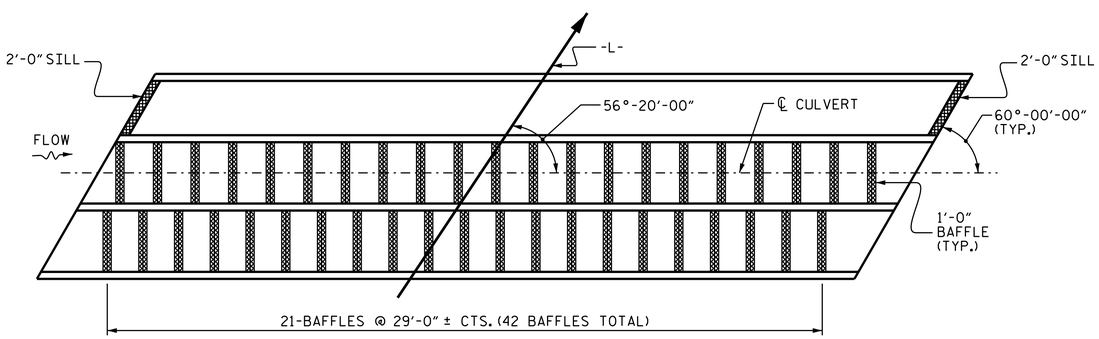


## PLAN

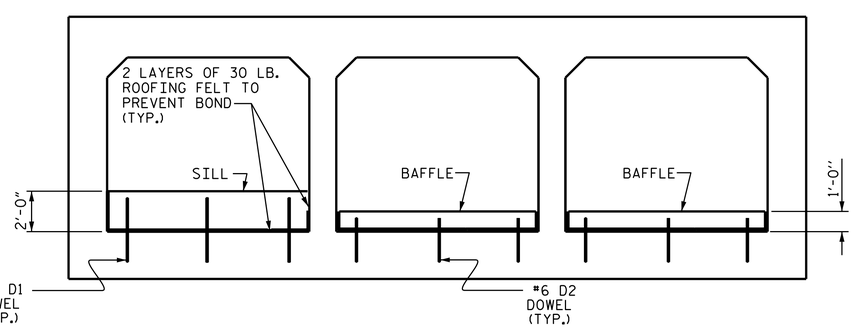


## ELEVATION

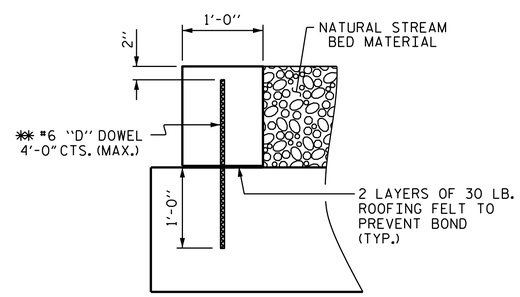


## SECTION THROUGH SILL/BAFFLE

✱✱ DOWELS MAY BE PUSHED INTO GREEN CONCRETE AFTER SLAB HAS BEEN FLOAT FINISHED.

# CULVERT SILL/BAFFLE DETAILS

(LOOKING DOWNSTREAM)

## BAR TYPES

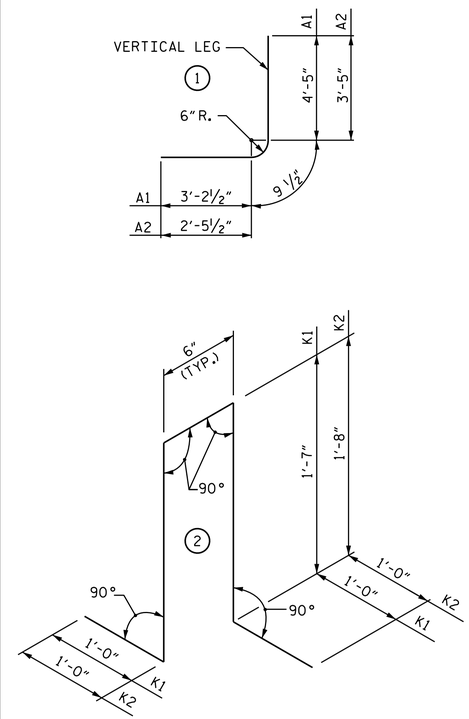


BAR DIMENSIONS ARE OUT TO OUT.

## BILL OF MATERIAL

| BAR | NO. | SIZE | TYPE | LENGTH | WEIGHT | BAR | NO. | SIZE | TYPE | LENGTH | WEIGHT |
|---|---|---|---|---|---|---|---|---|---|---|---|
| A1 | 3592 | #4 | 1 | 8'-5" | 20195 | A308 | 8 | #4 | STR | 14'-10" | 79 |
| A2 | 3592 | #4 | 1 | 6'-8" | 15996 | A309 | 8 | #4 | STR | 12'-6" | 67 |
| | | | | | | A310 | 8 | #4 | STR | 10'-2" | 54 |
| A100 | 1390 | #5 | STR | 33'-5" | 48446 | A311 | 8 | #4 | STR | 7'-11" | 42 |
| A101 | 6 | #5 | STR | 31'-2" | 195 | A312 | 8 | #4 | STR | 5'-7" | 30 |
| A102 | 6 | #5 | STR | 29'-0" | 181 | A313 | 8 | #4 | STR | 3'-3" | 17 |
| A103 | 6 | #5 | STR | 26'-10" | 168 | | | | | | |
| A104 | 6 | #5 | STR | 24'-8" | 154 | A400 | 3474 | #4 | STR | 17'-7" | 40804 |
| A105 | 6 | #5 | STR | 22'-6" | 141 | A401 | 16 | #4 | STR | 16'-7" | 177 |
| A106 | 6 | #5 | STR | 20'-4" | 127 | A402 | 8 | #4 | STR | 28'-8" | 153 |
| A107 | 6 | #5 | STR | 18'-2" | 114 | A403 | 8 | #4 | STR | 26'-4" | 141 |
| A108 | 6 | #5 | STR | 16'-0" | 100 | A404 | 8 | #4 | STR | 24'-1" | 129 |
| A109 | 6 | #5 | STR | 13'-10" | 87 | A405 | 8 | #4 | STR | 21'-9" | 116 |
| A110 | 6 | #5 | STR | 11'-8" | 73 | A406 | 8 | #4 | STR | 19'-5" | 104 |
| A111 | 6 | #5 | STR | 9'-6" | 59 | A407 | 8 | #4 | STR | 17'-2" | 92 |
| A112 | 6 | #5 | STR | 7'-4" | 46 | A408 | 8 | #4 | STR | 14'-10" | 79 |
| A113 | 6 | #5 | STR | 5'-2" | 32 | A409 | 8 | #4 | STR | 12'-6" | 67 |
| A114 | 6 | #5 | STR | 3'-0" | 19 | A410 | 8 | #4 | STR | 10'-2" | 54 |
| | | | | | | A411 | 8 | #4 | STR | 7'-11" | 42 |
| A200 | 1264 | #5 | STR | 33'-5" | 44055 | A412 | 8 | #4 | STR | 5'-7" | 30 |
| A201 | 6 | #5 | STR | 30'-11" | 193 | A413 | 8 | #4 | STR | 3'-3" | 17 |
| A202 | 6 | #5 | STR | 28'-6" | 178 | | | | | | |
| A203 | 6 | #5 | STR | 26'-2" | 164 | B1 | 1198 | #4 | STR | 12'-9" | 10203 |
| A204 | 6 | #5 | STR | 23'-9" | 149 | B2 | 3592 | #4 | STR | 8'-4" | 19995 |
| A205 | 6 | #5 | STR | 21'-5" | 134 | B3 | 2612 | #4 | STR | 12'-9" | 22246 |
| A206 | 6 | #5 | STR | 19'-0" | 119 | | | | | | |
| A207 | 6 | #5 | STR | 16'-7" | 104 | C1 | 3322 | #4 | STR | 29'-3" | 64909 |
| A208 | 6 | #5 | STR | 14'-3" | 89 | | | | | | |
| A209 | 6 | #5 | STR | 11'-10" | 74 | D1 | 6 | #6 | STR | 2'-10" | 26 |
| A210 | 6 | #5 | STR | 9'-6" | 59 | D2 | 126 | #6 | STR | 1'-10" | 347 |
| A211 | 6 | #5 | STR | 7'-1" | 44 | | | | | | |
| A212 | 6 | #5 | STR | 4'-9" | 30 | E1 | 16 | #5 | STR | 6'-11" | 115 |
| A213 | 6 | #5 | STR | 2'-4" | 15 | | | | | | |
| | | | | | | G1 | 8 | #5 | STR | 38'-8" | 323 |
| A300 | 3474 | #4 | STR | 17'-11" | 41578 | | | | | | |
| A301 | 16 | #4 | STR | 16'-7" | 177 | K1 | 1990 | #4 | 2 | 5'-8" | 7533 |
| A302 | 8 | #4 | STR | 28'-8" | 153 | K2 | 1990 | #4 | 2 | 5'-10" | 7754 |
| A303 | 8 | #4 | STR | 26'-4" | 141 | | | | | | |
| A304 | 8 | #4 | STR | 24'-1" | 129 | S2 | 12 | #8 | STR | 38'-8" | 1239 |
| A305 | 8 | #4 | STR | 21'-9" | 116 | | | | | | |
| A306 | 8 | #4 | STR | 19'-5" | 104 | REINFORCING STEEL | | | | LBS. | 351,014 |
| A307 | 8 | #4 | STR | 17'-2" | 92 | | | | | | |

## SPLICE LENGTH CHART

| BAR | SIZE | SPLICE LENGTH |
|---|---|---|
| A200 | #5 | 3'-0" |
| A300 | #4 | 2'-5" |
| A400 | #4 | 1'-9" |
| B1,B3 | #4 | 1'-5" |
| C1 | #4 | 1'-11" |

PROJECT NO. U-2579B
FORSYTH COUNTY
STATION: 616+45.00 -L-

SHEET 3 OF 5

STATE OF NORTH CAROLINA
DEPARTMENT OF TRANSPORTATION
RALEIGH

TRIPLE 10 FT. X 9 FT.
CONCRETE BOX CULVERT
56°-20'-00" SKEW

NORTH CAROLINA PROFESSIONAL SEAL 039349 ENGINEER JEREMY P. McCARTHA

DocuSigned by: Jeremy McCartha
F2E41196C0D347E...
8/5/2014

| REVISIONS | | | | | | SHEET NO. |
|---|---|---|---|---|---|---|
| NO. | BY: | DATE: | NO. | BY: | DATE: | C-11 |
| 1 | | | 3 | | | TOTAL SHEETS |
| 2 | | | 4 | | | 30 |

DRAWN BY : J. P. MCCARTHA DATE : 12-04-13
TRACED BY : T.H. CARROLL DATE : 1-22-14
SUBMITTED BY : J. P. MCCARTHA DATE : 2-26-14
DOCUMENT ENGINEER OF RECORD: J. P. MCCARTHA

05-AUG-2014 12:58
R:\Structures\Plans\Culverts\U2579B_SD_CU_20.dgn
lsutton

STR. #20