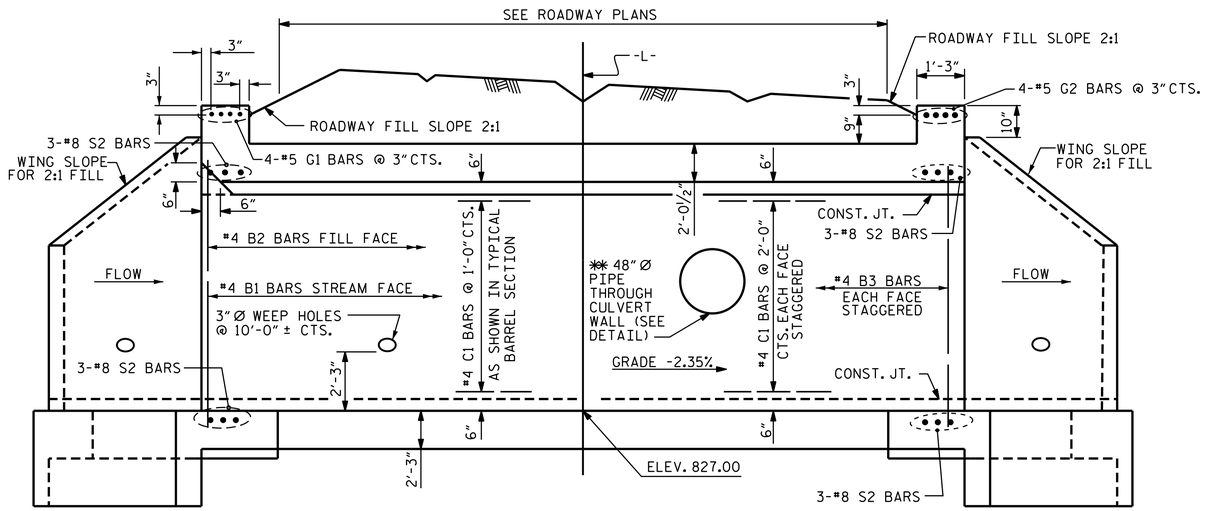


## CULVERT SECTION NORMAL TO ROADWAY

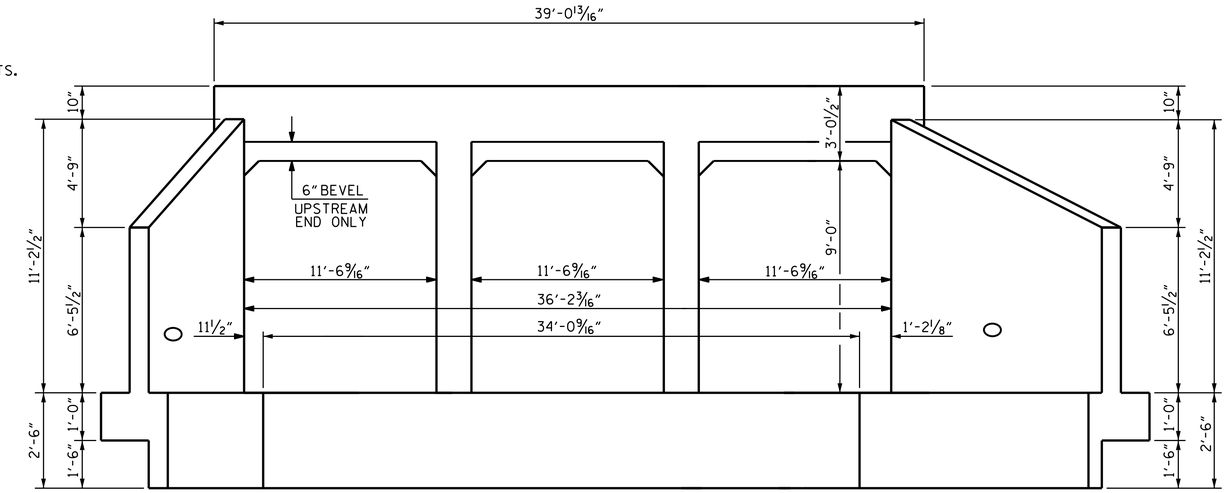


## END ELEVATION-NORMAL TO SKEW

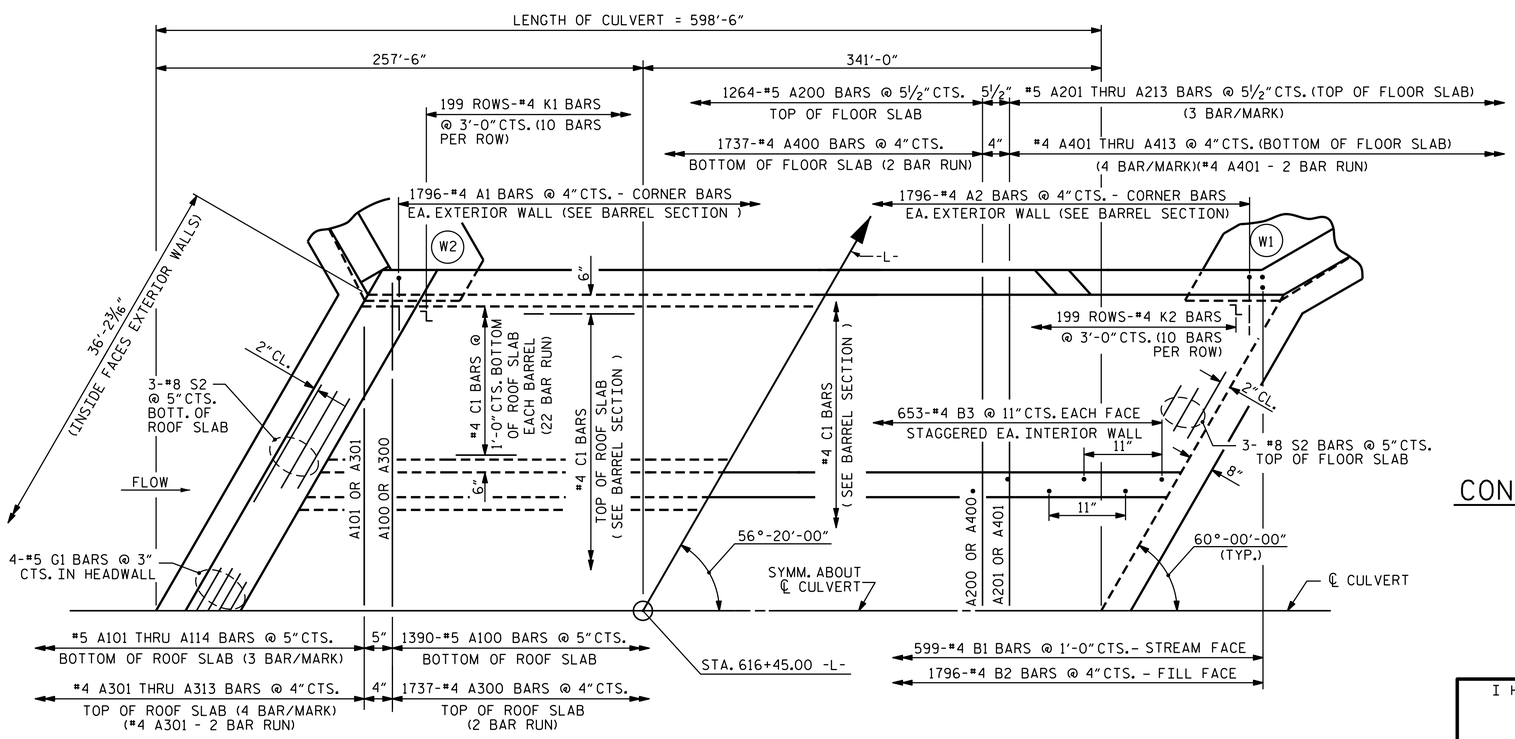


## PART PLAN - ROOF SLAB

## PART PLAN - FLOOR SLAB

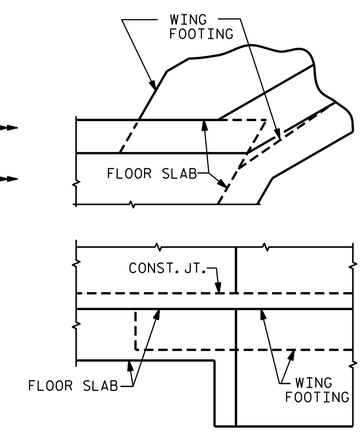


DETAIL

## CONNECTION OF WING FOOTING AND FLOOR SLAB

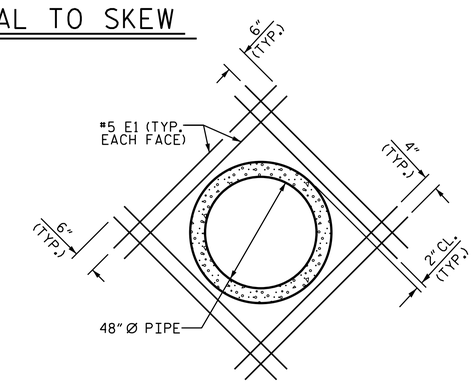


## DETAIL OF REINFORCING AROUND 48" Ø PIPE

** THE 48" PIPE THROUGH THE CULVERT WALL WILL BE LOCATED BY THE ENGINEER. THE REINFORCING STEEL SHALL BE FIELD BENT OR CUT AS NECESSARY TO CLEAR PIPE.

PROJECT NO. U-2579B
FORSYTH COUNTY
STATION: 616+45.00 -L-

SHEET 2 OF 5

I HEREBY CERTIFY THESE PLANS ARE THE AS-BUILT PLANS

NORTH CAROLINA PROFESSIONAL SEAL 039349 ENGINEER JEREMY P. MCCARTHA

DocuSigned by: Jeremy McCartha
F2E411950CDD3478...
8/5/2014

STATE OF NORTH CAROLINA
DEPARTMENT OF TRANSPORTATION
RALEIGH

TRIPLE 10 FT. X 9 FT. CONCRETE BOX CULVERT 56°-20'-00" SKEW

| REVISIONS | | | | | | SHEET NO. |
|---|---|---|---|---|---|---|
| NO. | BY: | DATE: | NO. | BY: | DATE: | C-10 |
| 1 | | | 3 | | | TOTAL SHEETS |
| 2 | | | 4 | | | 30 |

STR. #20

REVISED 11-19-99 BY M.A.M. CHECKED BY R.W.W.
REVISED 8-28-92 BY E.J.R. CHECKED BY G.R.P.
REDRAWN NOV.1990 BY B.E.W. CHECKED BY M.A.J.

ASSEMBLED BY : J. P. MCCARTHA DATE : 12-03-13
CHECKED BY : T.H. CARROLL DATE : 1-22-14

SPECIAL

DRAWN BY : H.A. JUDEH DATE : JULY 15,1971
CHECKED BY : RALPH D. UNDERWOOD DATE : AUG.4, 1971

STANDARD

DESIGN ENGINEER OF RECORD:
J. P. MCCARTHA DATE : 2-26-14

04-AUG-2014 17:05
R:\Structures\Plans\Culverts\U2579B_SD_CU_20.dgn
lsutton