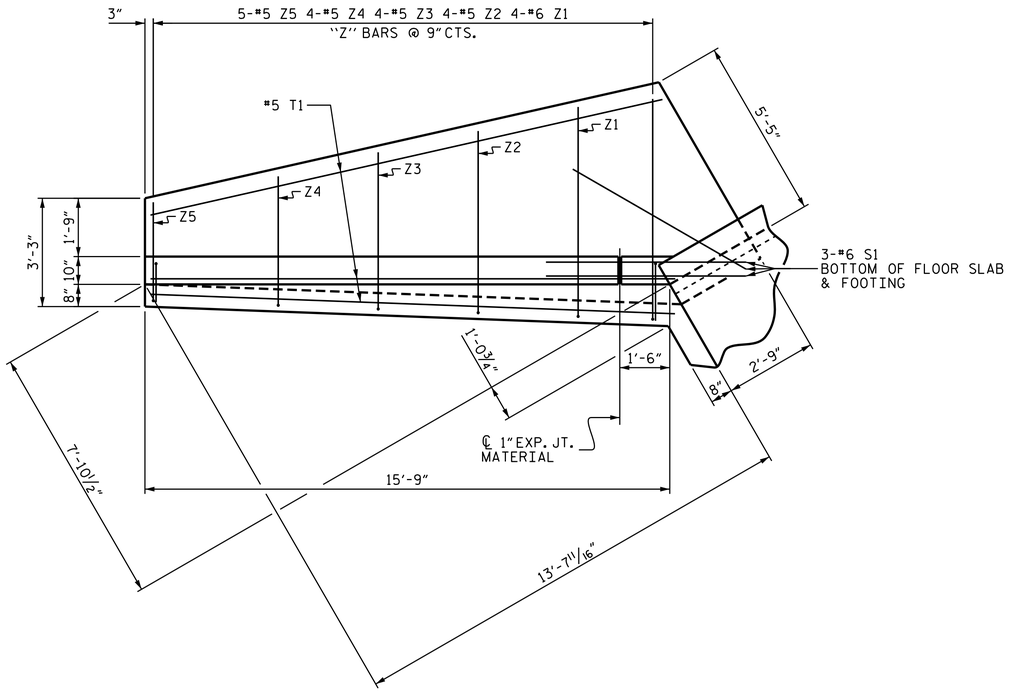


## PLAN

"V" BARS @ 1'-6"CTS.

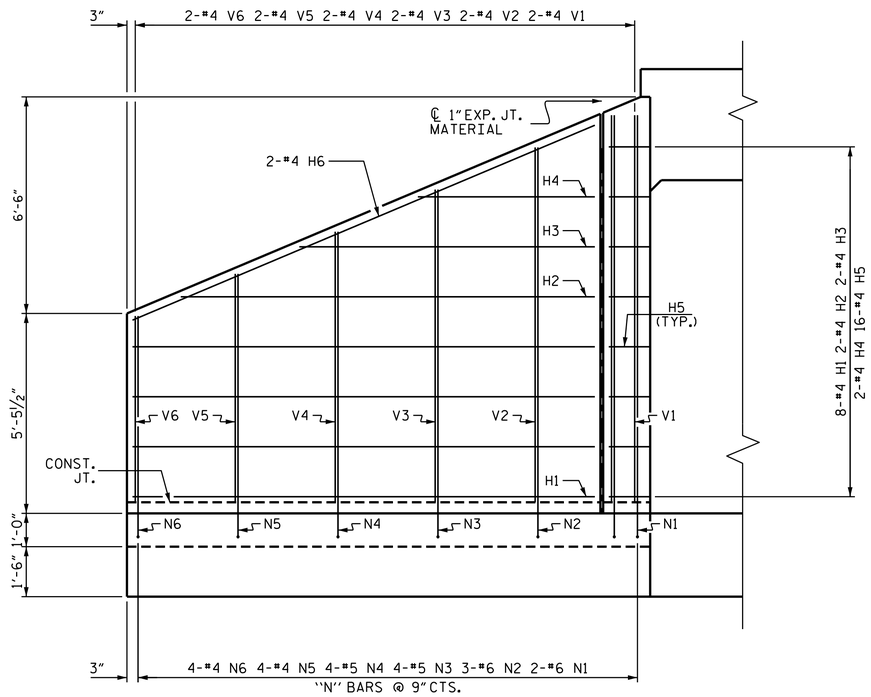


## ELEVATION

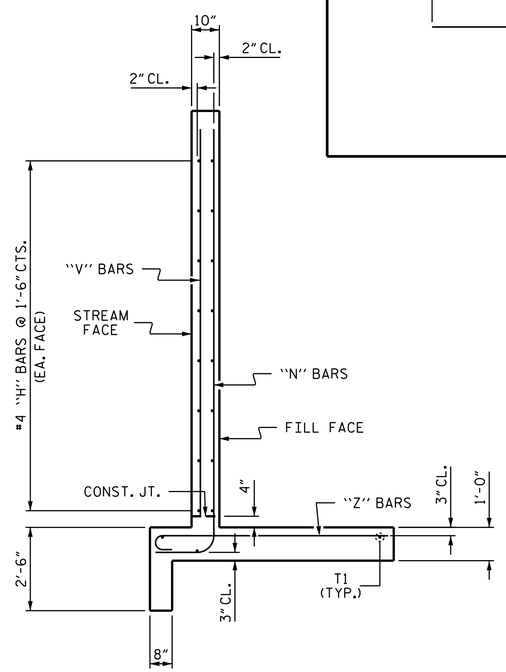


## TYPICAL WING SECTION

## BAR TYPES

ALL BAR DIMENSIONS ARE OUT TO OUT.

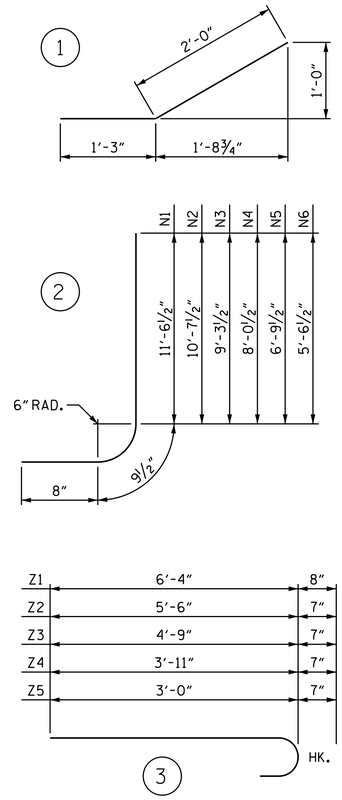


## BILL OF MATERIAL

| BAR | NO. | SIZE | TYPE | LENGTH | WEIGHT |
|---|---|---|---|---|---|
| H1 | 32 | #4 | STR | 13'-10" | 296 |
| H2 | 8 | #4 | STR | 11'-1" | 59 |
| H3 | 8 | #4 | STR | 7'-7" | 41 |
| H4 | 8 | #4 | STR | 4'-0" | 21 |
| H5 | 64 | #4 | 1 | 3'-3" | 139 |
| H6 | 8 | #4 | STR | 15'-0" | 80 |
| | | | | | |
| N1 | 8 | #6 | 2 | 13'-0" | 156 |
| N2 | 12 | #6 | 2 | 12'-1" | 218 |
| N3 | 16 | #5 | 2 | 10'-9" | 179 |
| N4 | 16 | #5 | 2 | 9'-6" | 159 |
| N5 | 16 | #4 | 2 | 8'-3" | 88 |
| N6 | 16 | #4 | 2 | 7'-0" | 75 |
| | | | | | |
| S1 | 12 | #6 | STR | 6'-0" | 108 |
| | | | | | |
| T1 | 12 | #5 | STR | 15'-9" | 197 |
| | | | | | |
| V1 | 8 | #4 | STR | 11'-0" | 59 |
| V2 | 8 | #4 | STR | 10'-1" | 54 |
| V3 | 8 | #4 | STR | 8'-9" | 47 |
| V4 | 8 | #4 | STR | 7'-6" | 40 |
| V5 | 8 | #4 | STR | 6'-3" | 33 |
| V6 | 8 | #4 | STR | 5'-0" | 27 |
| | | | | | |
| Z1 | 16 | #6 | 3 | 7'-0" | 168 |
| Z2 | 16 | #5 | 3 | 6'-1" | 102 |
| Z3 | 16 | #5 | 3 | 5'-4" | 89 |
| Z4 | 16 | #5 | 3 | 4'-6" | 75 |
| Z5 | 20 | #5 | 3 | 3'-7" | 75 |

REINFORCING STEEL
FOR 4 WINGS 2585 LBS.

CLASS A CONCRETE
4 WINGS 33.1 C.Y.
2 HEADWALLS 3.6 C.Y.
END CURTAIN WALLS 4.3 C.Y.
TOTAL 41.0 C.Y.

PROJECT NO. U-2579B
FORSYTH COUNTY
STATION: 667+15.00 -L-

SHEET 4 OF 5

STATE OF NORTH CAROLINA
DEPARTMENT OF TRANSPORTATION
RALEIGH

# WINGS FOR CONCRETE BOX CULVERT

H = 10'-0" SLOPE = 2:1
90° SKEW

NORTH CAROLINA PROFESSIONAL SEAL 23371 ENGINEER VIPUL A. PATEL

DocuSigned by: Vipul A. Patel
33980B6CBE1C486...
8/8/2014

| REVISIONS | | | | | | |
|---|---|---|---|---|---|---|
| NO. | BY: | DATE: | NO. | BY: | DATE: | |
| 1 | | | 3 | | | |
| 2 | | | 4 | | | |

SHEET NO. C-17
TOTAL SHEETS 30

STR. #21

DRAWN BY : T. H. CARROLL DATE : 5/19/14
CHECKED BY : M. E. GILES DATE : 5/28/14
DESIGN ENGINEER OF RECORD: V. A. PATEL DATE : 6/10/14

05-AUG-2014 13:27
R:\Structures\Plans\Culverts\U2579B_SD_CU_21.dgn
lsutton