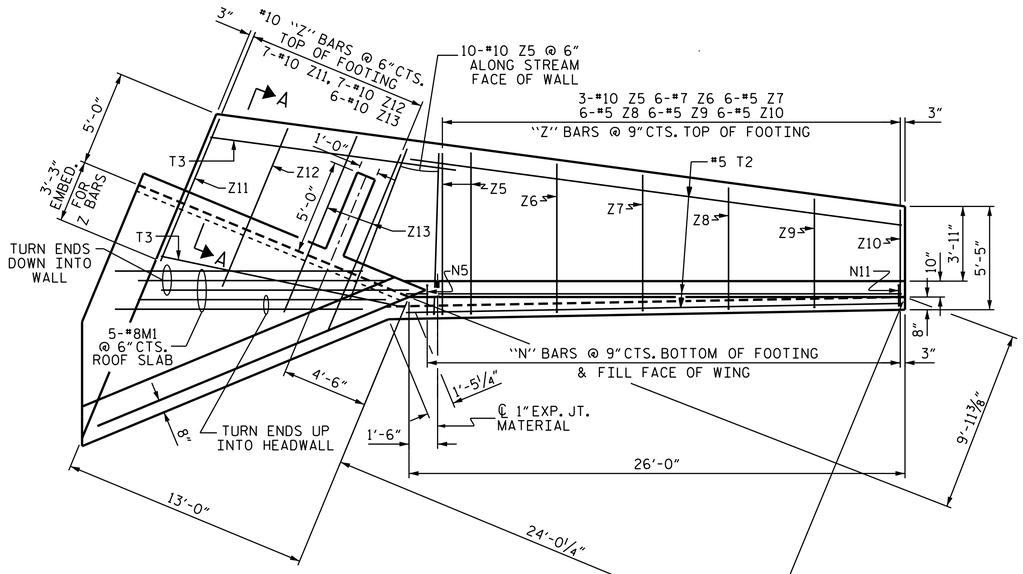


## PLAN - W1

✱ CENTER ALL C1 BARS ON ℄ COUNTERFORT

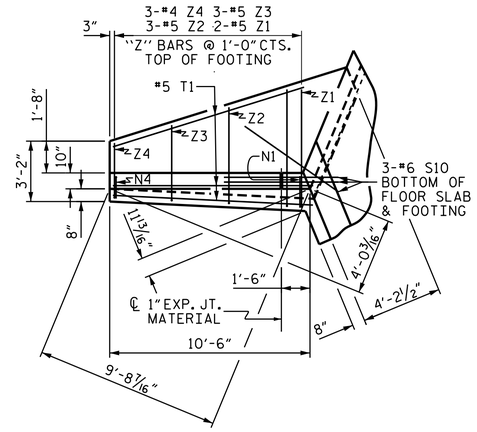


## PLAN - W2

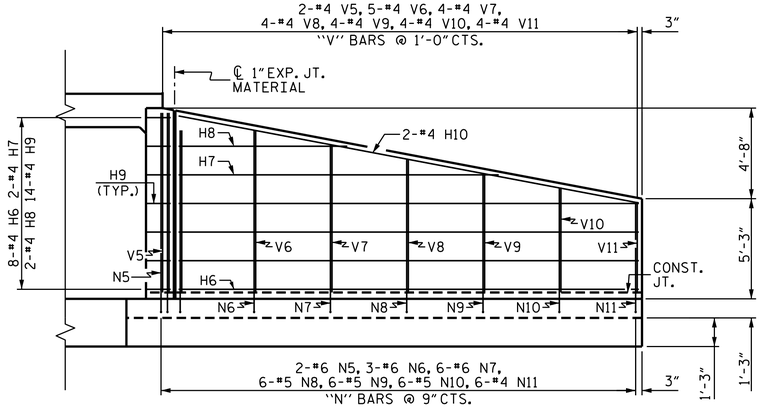


## ELEVATION - W1

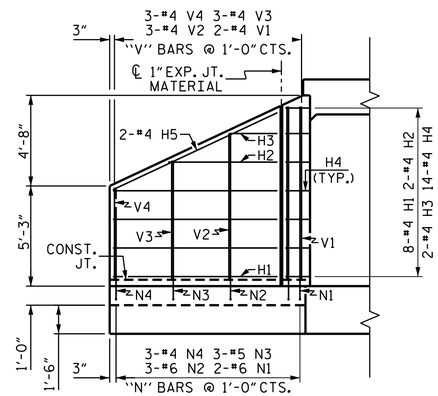


## ELEVATION - W2

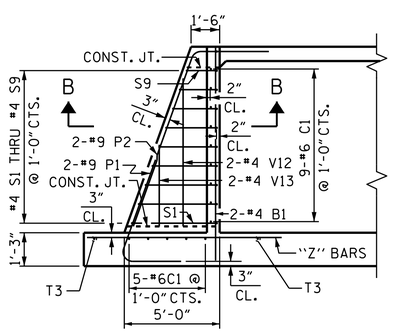


## SECTION A-A

STANDARD BARREL REINFORCING STEEL NOT SHOWN

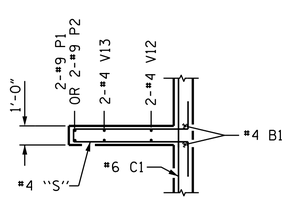


## SECTION B-B

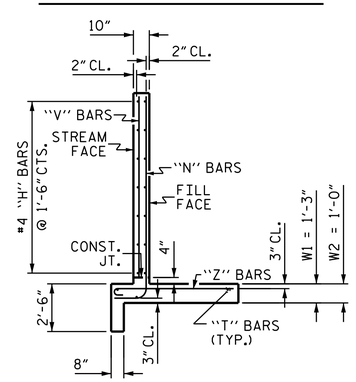


## TYPICAL WING SECTION

## BAR TYPES

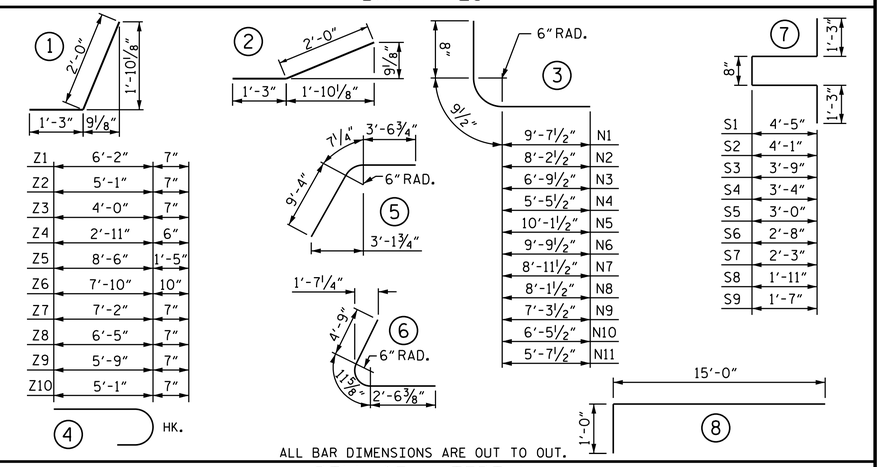


| | | |
|---|---|---|
| Z1 | 6'-2" | 7" |
| Z2 | 5'-1" | 7" |
| Z3 | 4'-0" | 7" |
| Z4 | 2'-11" | 6" |
| Z5 | 8'-6" | 1'-5" |
| Z6 | 7'-10" | 10" |
| Z7 | 7'-2" | 7" |
| Z8 | 6'-5" | 7" |
| Z9 | 5'-9" | 7" |
| Z10 | 5'-1" | 7" |

| | |
|---|---|
| N1 | 9'-7 1/2" |
| N2 | 8'-2 1/2" |
| N3 | 6'-9 1/2" |
| N4 | 5'-5 1/2" |
| N5 | 10'-1 1/2" |
| N6 | 9'-9 1/2" |
| N7 | 8'-11 1/2" |
| N8 | 8'-1 1/2" |
| N9 | 7'-3 1/2" |
| N10 | 6'-5 1/2" |
| N11 | 5'-7 1/2" |

| | |
|---|---|
| S1 | 4'-5" |
| S2 | 4'-1" |
| S3 | 3'-9" |
| S4 | 3'-4" |
| S5 | 3'-0" |
| S6 | 2'-8" |
| S7 | 2'-3" |
| S8 | 1'-11" |
| S9 | 1'-7" |

ALL BAR DIMENSIONS ARE OUT TO OUT.

## BILL OF MATERIAL

STAGE I - WING W1

| BAR | NO. | SIZE | TYPE | LENGTH | WEIGHT |
|---|---|---|---|---|---|
| B1 | 2 | #4 | STR | 10'-6" | 14 |
| C1 | 14 | #6 | STR | 9'-0" | 189 |
| H6 | 8 | #4 | STR | 24'-1" | 129 |
| H7 | 2 | #4 | STR | 16'-7" | 22 |
| H8 | 2 | #4 | STR | 8'-6" | 11 |
| H9 | 14 | #4 | 2 | 3'-3" | 30 |
| H10 | 2 | #4 | STR | 24'-6" | 33 |
| M1 | 5 | #8 | 8 | 16'-0" | 214 |
| N5 | 2 | #6 | 3 | 11'-7" | 35 |
| N6 | 3 | #6 | 3 | 11'-3" | 51 |
| N7 | 6 | #6 | 3 | 10'-5" | 94 |
| N8 | 6 | #5 | 3 | 9'-7" | 60 |
| N9 | 6 | #5 | 3 | 8'-9" | 55 |
| N10 | 6 | #5 | 3 | 7'-11" | 50 |
| N11 | 6 | #4 | 3 | 7'-1" | 28 |
| P1 | 2 | #9 | 6 | 8'-3" | 56 |
| P2 | 2 | #9 | 5 | 13'-6" | 92 |
| S1 | 1 | #4 | 7 | 12'-0" | 8 |
| S2 | 1 | #4 | 7 | 11'-4" | 8 |
| S3 | 1 | #4 | 7 | 10'-8" | 7 |
| S4 | 1 | #4 | 7 | 9'-10" | 7 |
| S5 | 1 | #4 | 7 | 9'-2" | 6 |
| S6 | 1 | #4 | 7 | 8'-6" | 6 |
| S7 | 1 | #4 | 7 | 7'-8" | 5 |

| BAR | NO. | SIZE | TYPE | LENGTH | WEIGHT |
|---|---|---|---|---|---|
| S8 | 1 | #4 | 7 | 7'-0" | 5 |
| S9 | 1 | #4 | 7 | 6'-4" | 4 |
| T2 | 3 | #5 | STR | 26'-0" | 81 |
| T3 | 2 | #5 | STR | 13'-0" | 27 |
| V5 | 2 | #4 | STR | 9'-4" | 12 |
| V6 | 5 | #4 | STR | 8'-5" | 28 |
| V7 | 4 | #4 | STR | 7'-8" | 20 |
| V8 | 4 | #4 | STR | 6'-11" | 18 |
| V9 | 4 | #4 | STR | 6'-2" | 16 |
| V10 | 4 | #4 | STR | 5'-5" | 14 |
| V11 | 4 | #4 | STR | 4'-8" | 12 |
| V12 | 2 | #4 | STR | 7'-9" | 10 |
| V13 | 2 | #4 | STR | 4'-3" | 6 |
| Z5 | 13 | #10 | 4 | 9'-11" | 555 |
| Z6 | 6 | #7 | 4 | 8'-8" | 106 |
| Z7 | 6 | #5 | 4 | 7'-9" | 48 |
| Z8 | 6 | #5 | 4 | 7'-0" | 44 |
| Z9 | 6 | #5 | 4 | 6'-4" | 40 |
| Z10 | 6 | #5 | 4 | 5'-8" | 35 |
| Z11 | 7 | #10 | STR | 8'-1" | 243 |
| Z12 | 7 | #10 | STR | 9'-0" | 271 |
| Z13 | 6 | #10 | STR | 10'-0" | 258 |
| REINFORCING STEEL | | | | LBS. | 3,063 |
| CLASS A CONCRETE | | | | | |
| WING W1 | | | | C.Y. | 23.8 |
| END CURTAIN WALL | | | | C.Y. | 1.5 |
| COUNTERFORT | | | | C.Y. | 1.0 |
| TOTAL | | | | C.Y. | 26.3 |

STAGE II - WING W2

| BAR | NO. | SIZE | TYPE | LENGTH | WEIGHT |
|---|---|---|---|---|---|
| H1 | 8 | #4 | STR | 8'-7" | 46 |
| H2 | 2 | #4 | STR | 5'-8" | 8 |
| H3 | 2 | #4 | STR | 2'-6" | 3 |
| H4 | 14 | #4 | 1 | 3'-3" | 30 |
| H5 | 2 | #4 | STR | 9'-6" | 13 |
| N1 | 2 | #6 | 3 | 11'-1" | 33 |
| N2 | 3 | #6 | 3 | 9'-8" | 44 |
| N3 | 3 | #5 | 3 | 8'-3" | 26 |
| N4 | 3 | #4 | 3 | 6'-11" | 14 |
| S10 | 3 | #6 | STR | 6'-0" | 27 |
| T1 | 3 | #5 | STR | 10'-6" | 33 |
| V1 | 2 | #4 | STR | 9'-0" | 12 |
| V2 | 3 | #4 | STR | 7'-7" | 15 |
| V3 | 3 | #4 | STR | 6'-2" | 12 |
| V4 | 3 | #4 | STR | 4'-10" | 10 |
| Z1 | 2 | #5 | 4 | 6'-9" | 14 |
| Z2 | 3 | #5 | 4 | 5'-8" | 18 |
| Z3 | 3 | #5 | 4 | 4'-7" | 14 |
| Z4 | 3 | #4 | 4 | 3'-5" | 7 |
| REINFORCING STEEL | | | | LBS. | 379 |
| CLASS A CONCRETE | | | | | |
| WING W2 | | | | C.Y. | 5.2 |
| END CURTAIN WALL | | | | C.Y. | 0.5 |
| HEADWALL | | | | C.Y. | 1.8 |
| TOTAL | | | | C.Y. | 7.5 |

PROJECT NO. U-2579B

FORSYTH COUNTY

STATION: 45+65.43 -Y4-

SHEET 4 OF 7

STATE OF NORTH CAROLINA
DEPARTMENT OF TRANSPORTATION
RALEIGH

# WINGS FOR CONCRETE BOX CULVERT

H= 9'-0" 45° SKEW SLOPE= 2:1

LEFT EXTENSION

NORTH CAROLINA PROFESSIONAL SEAL 23371 ENGINEER VIPUL A. PATEL

DocuSigned by: Vipul A. Patel 339B086CBE1C486... 8/8/2014

| REVISIONS | | | | | | | SHEET NO. |
|---|---|---|---|---|---|---|---|
| NO. | BY: | DATE: | NO. | BY: | DATE: | | C-27 |
| 1 | | | 3 | | | | TOTAL SHEETS |
| 2 | | | 4 | | | | 30 |

STR. #23

| | | | |
|---|---|---|---|
| DRAWN BY : | H. A. LOCKLEAR | DATE : | 5/22/14 |
| CHECKED BY : | T. H. CARROLL | DATE : | 5/27/14 |
| DESIGN ENGINEER OF RECORD: | H. A. LOCKLEAR | DATE : | 6/10/14 |

08-AUG-2014 11:19
R:\Structures\Plans\Culverts\U2579B_SD_CU_23.dgn
lsutton