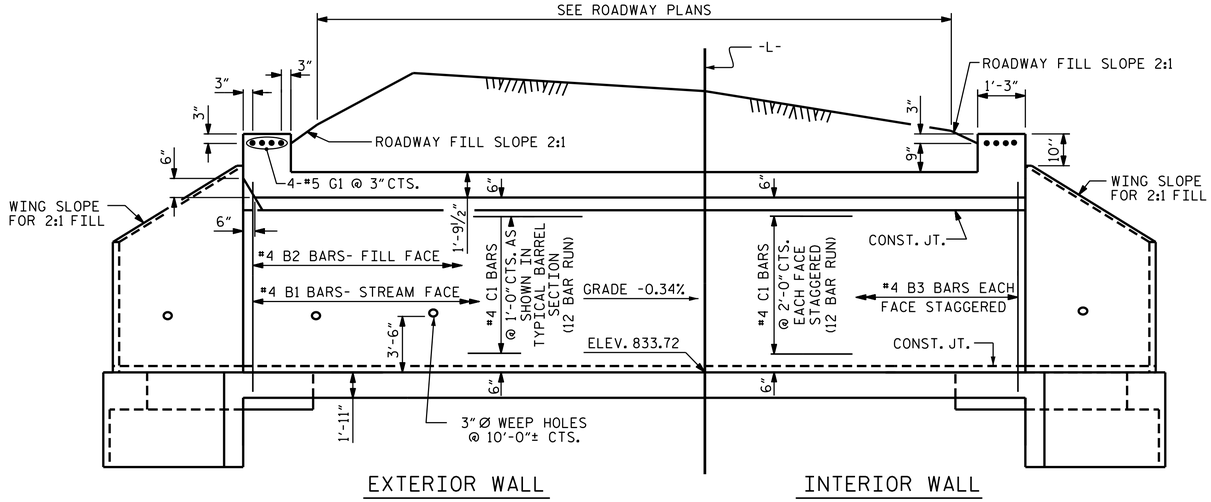


## CULVERT SECTION NORMAL TO ROADWAY

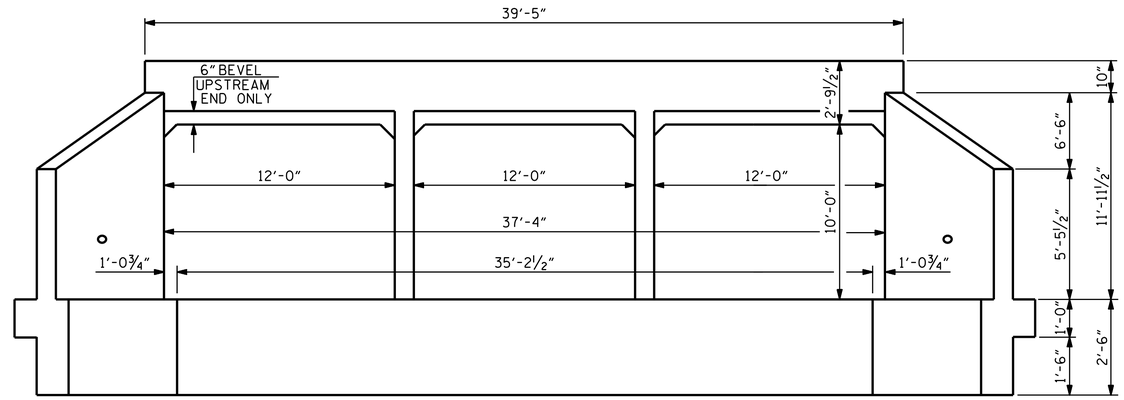


## END ELEVATION

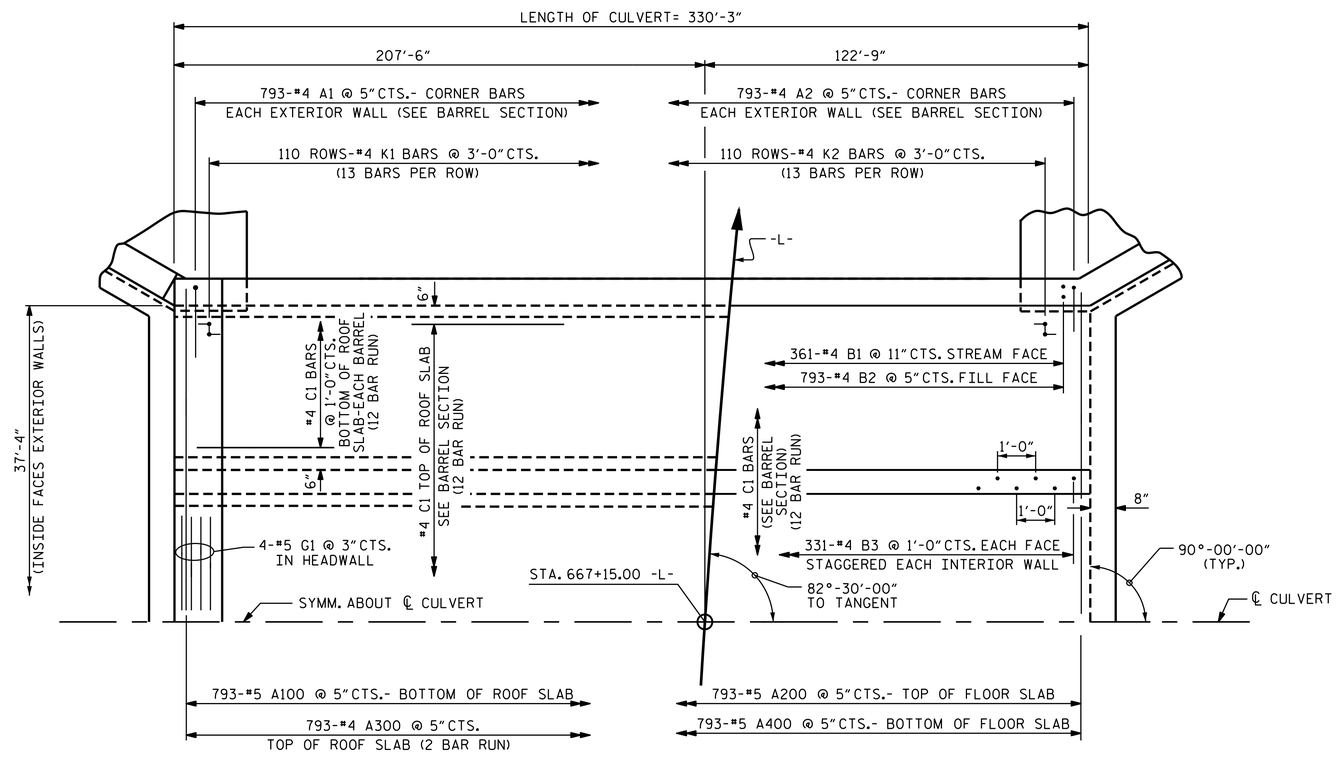


## PART PLAN - ROOF SLAB

## PART PLAN - FLOOR SLAB

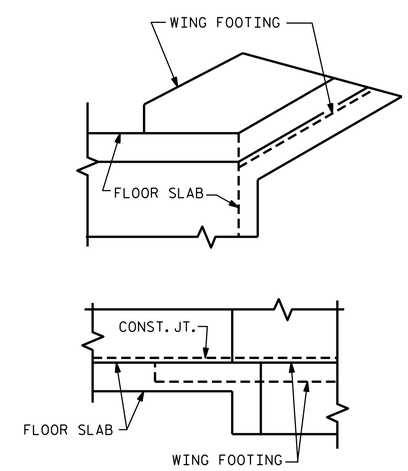


DETAIL

## CONNECTION OF WING FOOTING AND FLOOR SLAB

I HEREBY CERTIFY THESE PLANS ARE THE AS-BUILT PLANS

PROJECT NO. U-2579B

FORSYTH COUNTY

STATION: 667+15.00 -L-

SHEET 2 OF 5

STATE OF NORTH CAROLINA
DEPARTMENT OF TRANSPORTATION
RALEIGH

# TRIPLE 12 FT. X 10 FT. CONCRETE BOX CULVERT 82°-30'-00" SKEW

NORTH CAROLINA PROFESSIONAL SEAL 23371 ENGINEER VIPUL A. PATEL

DocuSigned by: Vipul A. Patel 339B086CBE1C486 8/8/2014

| REVISIONS | | | | | | SHEET NO. |
|---|---|---|---|---|---|---|
| NO. | BY: | DATE: | NO. | BY: | DATE: | C-15 |
| 1 | | | 3 | | | TOTAL SHEETS |
| 2 | | | 4 | | | 30 |

STR. #21

| | | | |
|---|---|---|---|
| DRAWN BY : | T. H. CARROLL | DATE : | 12/19/13 |
| CHECKED BY : | J. P. MCCARTHA | DATE : | 2/6/14 |
| DESIGN ENGINEER OF RECORD: | T. H. CARROLL | DATE : | 6/14/14 |

05-AUG-2014 13:27
R:\Structures\Plans\Culverts\U2579B_SD_CU_21.dgn
lsutton