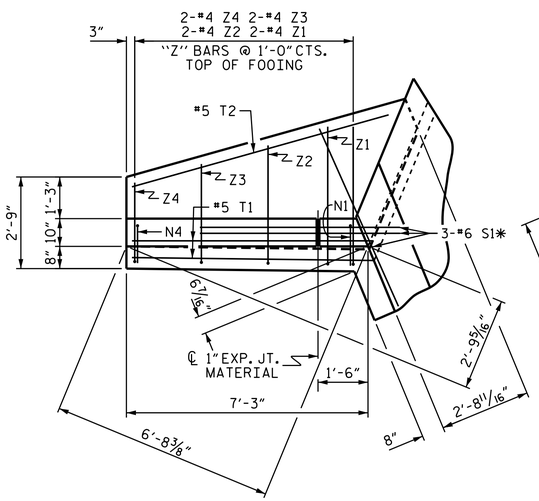


PLAN W2

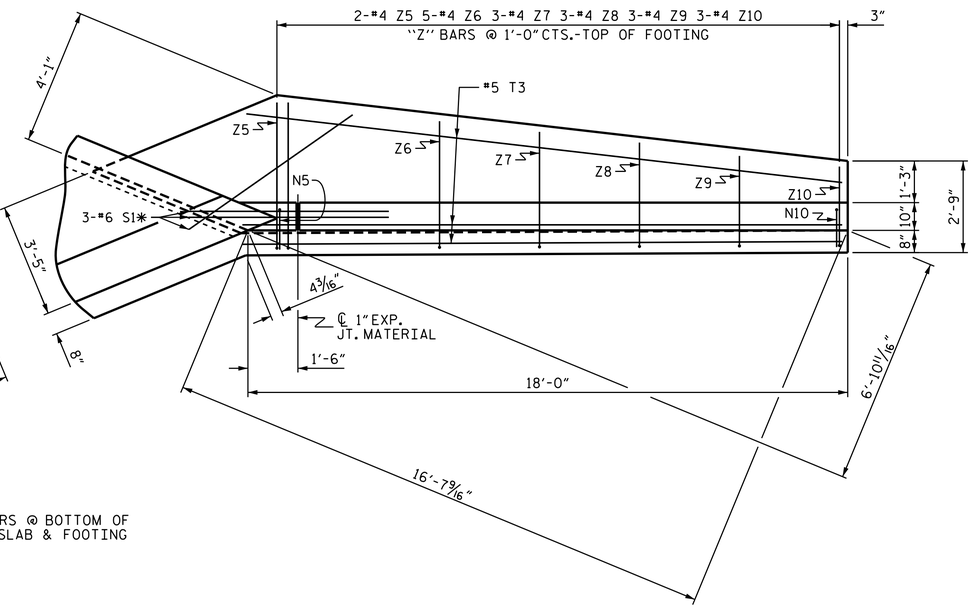


PLAN W1

* S1 BARS @ BOTTOM OF FLOOR SLAB & FOOTING

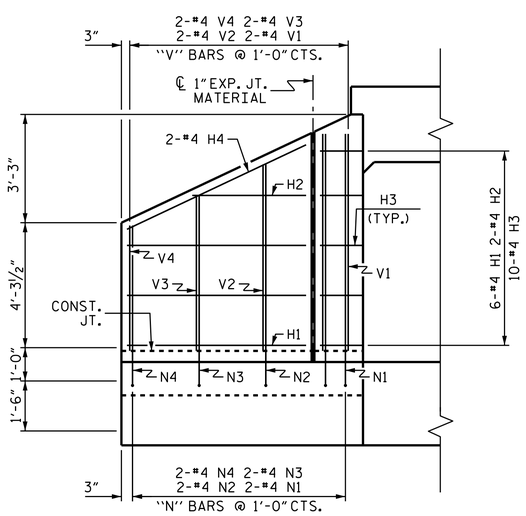


ELEVATION W2

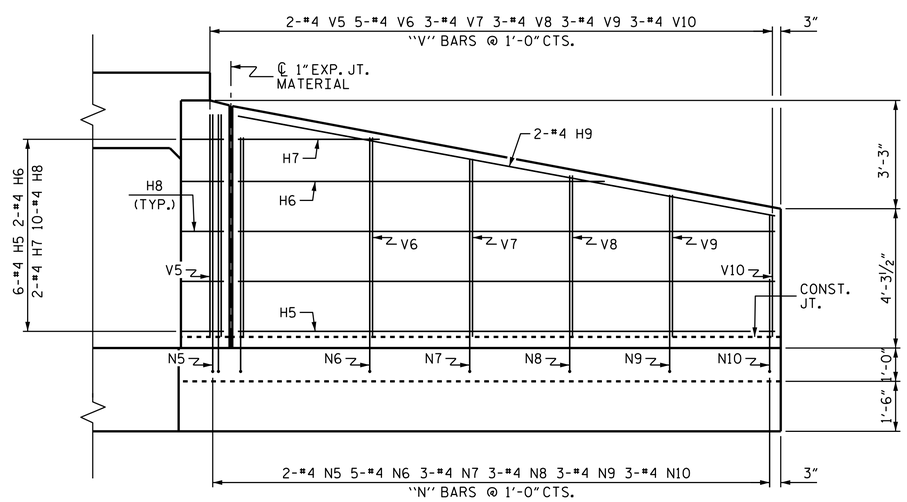


ELEVATION W1

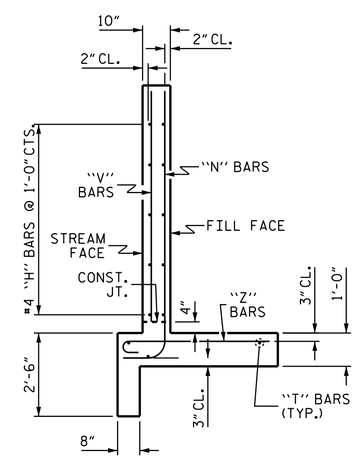


TYPICAL WING SECTION

## BAR TYPES

ALL BAR DIMENSIONS ARE OUT TO OUT.

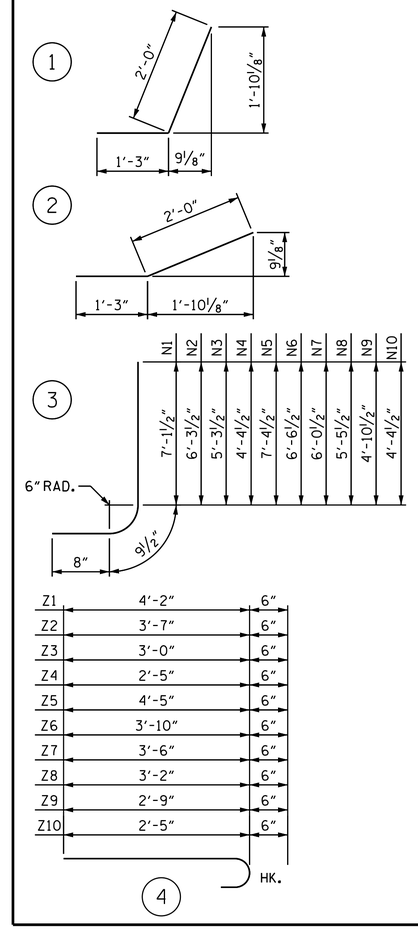


## BILL OF MATERIAL

| BAR | NO. | SIZE | TYPE | LENGTH | WEIGHT |
|---|---|---|---|---|---|
| H1 | 12 | #4 | STR | 5'-4" | 43 |
| H2 | 4 | #4 | STR | 3'-7" | 10 |
| H3 | 20 | #4 | 1 | 3'-3" | 43 |
| H4 | 4 | #4 | STR | 5'-11" | 16 |
| H5 | 12 | #4 | STR | 16'-1" | 129 |
| H6 | 4 | #4 | STR | 11'-7" | 31 |
| H7 | 4 | #4 | STR | 3'-7" | 10 |
| H8 | 20 | #4 | 2 | 3'-3" | 43 |
| H9 | 4 | #4 | STR | 16'-4" | 44 |
| | | | | | |
| N1 | 4 | #4 | 3 | 8'-7" | 23 |
| N2 | 4 | #4 | 3 | 7'-9" | 21 |
| N3 | 4 | #4 | 3 | 6'-9" | 18 |
| N4 | 4 | #4 | 3 | 5'-10" | 16 |
| N5 | 4 | #4 | 3 | 8'-10" | 24 |
| N6 | 10 | #4 | 3 | 8'-0" | 53 |
| N7 | 6 | #4 | 3 | 7'-6" | 30 |
| N8 | 6 | #4 | 3 | 6'-11" | 28 |
| N9 | 6 | #4 | 3 | 6'-4" | 25 |
| N10 | 6 | #4 | 3 | 5'-10" | 23 |
| | | | | | |
| S1 | 12 | #6 | STR | 6'-0" | 108 |
| | | | | | |
| T1 | 4 | #5 | STR | 7'-3" | 30 |
| T2 | 2 | #5 | STR | 8'-0" | 17 |
| T3 | 6 | #5 | STR | 18'-0" | 113 |
| | | | | | |
| V1 | 4 | #4 | STR | 6'-7" | 18 |
| V2 | 4 | #4 | STR | 5'-8" | 15 |
| V3 | 4 | #4 | STR | 4'-9" | 13 |
| V4 | 4 | #4 | STR | 3'-10" | 10 |
| V5 | 4 | #4 | STR | 6'-9" | 18 |
| V6 | 10 | #4 | STR | 6'-0" | 40 |
| V7 | 6 | #4 | STR | 5'-5" | 22 |
| V8 | 6 | #4 | STR | 4'-11" | 20 |
| V9 | 6 | #4 | STR | 4'-4" | 17 |
| V10 | 6 | #4 | STR | 3'-9" | 15 |
| | | | | | |
| Z1 | 4 | #4 | 4 | 4'-8" | 12 |
| Z2 | 4 | #4 | 4 | 4'-1" | 11 |
| Z3 | 4 | #4 | 4 | 3'-6" | 9 |
| Z4 | 4 | #4 | 4 | 2'-11" | 8 |
| Z5 | 4 | #4 | 4 | 4'-11" | 13 |
| Z6 | 10 | #4 | 4 | 4'-4" | 29 |
| Z7 | 6 | #4 | 4 | 4'-0" | 16 |
| Z8 | 6 | #4 | 4 | 3'-8" | 15 |
| Z9 | 6 | #4 | 4 | 3'-3" | 13 |
| Z10 | 6 | #4 | 4 | 2'-11" | 12 |

REINFORCING STEEL FOR 4 WINGS 1224 LBS.

CLASS A CONCRETE
- 4 WINGS 19.3 C.Y.
- 2 HEADWALLS 2.1 C.Y.
- 2 END CURTAIN WALLS 2.5 C.Y.
- TOTAL 23.9 C.Y.

PROJECT NO. U-2579B
FORSYTH COUNTY
STATION: 23+11.00 -Y1-

SHEET 4 OF 5

STATE OF NORTH CAROLINA
DEPARTMENT OF TRANSPORTATION
RALEIGH

# WINGS FOR CONCRETE BOX CULVERT

H = 6'-0" SLOPE = 2:1
45° SKEW

NORTH CAROLINA PROFESSIONAL SEAL 23371 ENGINEER VIPUL A. PATEL

DocuSigned by: Vipul A. Patel 339B086CBE1C48E 8/8/2014

| REVISIONS | | | | | | SHEET NO. |
|---|---|---|---|---|---|---|
| NO. | BY: | DATE: | NO. | BY: | DATE: | C-22 |
| 1 | | | 3 | | | TOTAL SHEETS |
| 2 | | | 4 | | | 30 |

STR. #22

DRAWN BY : T. H. CARROLL DATE : 5/19/14
CHECKED BY : M. E. GILES DATE : 5/28/14
DESIGN ENGINEER OF RECORD: V. A. PATEL DATE : 6/10/14

05-AUG-2014 13:27
R:\Structures\Plans\Culverts\U2579B_SD_CU_22.dgn
lsutton