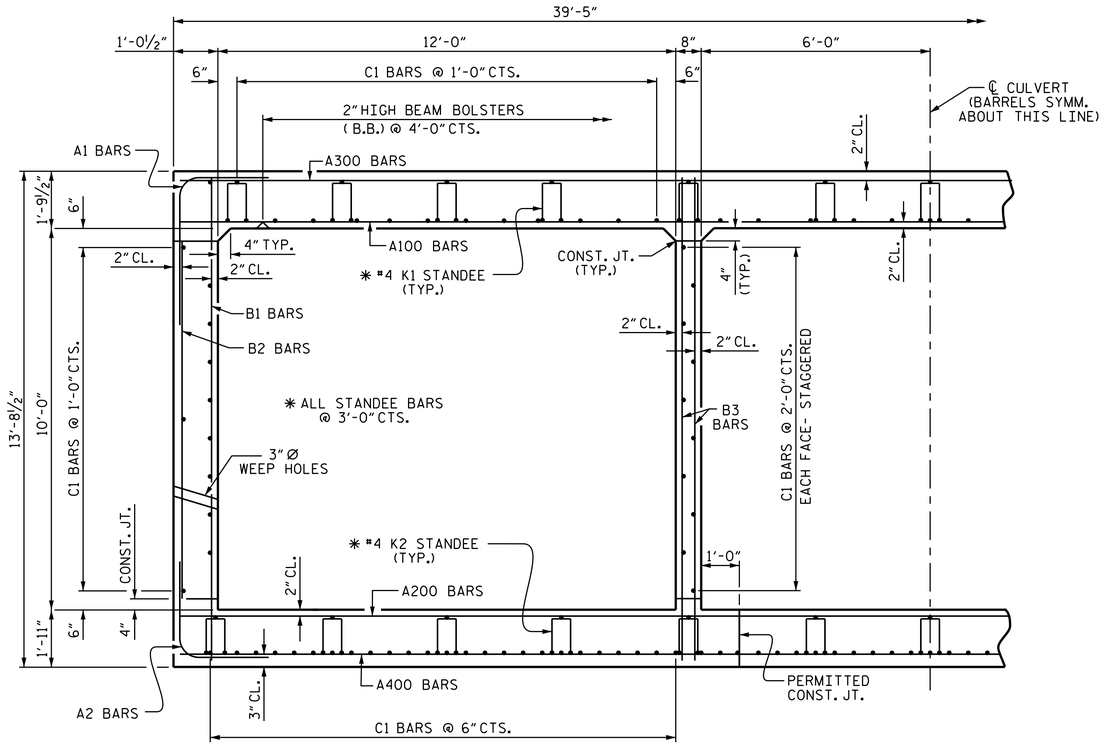


## RIGHT ANGLE SECTION OF BARREL

THERE ARE 179 "C" BARS IN SECTION OF BARREL.

## BAR TYPE

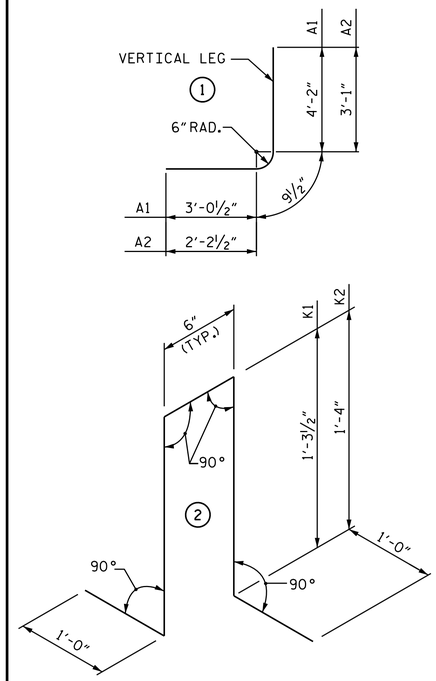


## STANDEE BAR

BAR DIMENSIONS ARE OUT TO OUT

## BILL OF MATERIAL

| BAR | NO. | SIZE | TYPE | LENGTH | WEIGHT |
|---|---|---|---|---|---|
| A1 | 1586 | #4 | 1 | 8'-0" | 8476 |
| A2 | 1586 | #4 | 1 | 6'-1" | 6445 |
| | | | | | |
| A100 | 793 | #5 | STR | 39'-0" | 32257 |
| A200 | 793 | #5 | STR | 39'-0" | 32257 |
| A300 | 1586 | #4 | STR | 20'-9" | 21984 |
| A400 | 793 | #5 | STR | 39'-0" | 32257 |
| | | | | | |
| B1 | 722 | #4 | STR | 13'-2" | 6350 |
| B2 | 1586 | #4 | STR | 9'-4" | 9888 |
| B3 | 1324 | #4 | STR | 13'-2" | 11645 |
| | | | | | |
| C1 | 2148 | #4 | STR | 29'-3" | 41970 |
| | | | | | |
| D1 | 12 | #6 | STR | 2'-10" | 51 |
| D2 | 36 | #6 | STR | 1'-10" | 99 |
| | | | | | |
| G1 | 8 | #5 | STR | 39'-1" | 326 |
| | | | | | |
| K1 | 1430 | #4 | 2 | 5'-1" | 4856 |
| K2 | 1430 | #4 | 2 | 5'-2" | 4935 |
| | | | | | |
| REINFORCING STEEL | | | | LBS. | 213,796 |

### SPLICE LENGTH CHART

| BAR | SIZE | SPLICE LENGTH |
|---|---|---|
| A200 | #5 | 3'-0" |
| A300 | #4 | 2'-5" |
| A400 | #5 | 2'-2" |
| B1, B3 | #4 | 1'-5" |
| C1 | #4 | 1'-11" |

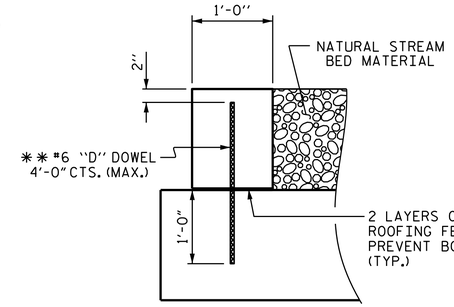


## SECTION THROUGH SILL/BAFFLE

✱✱ DOWELS MAY BE PUSHED INTO GREEN CONCRETE AFTER SLAB HAS BEEN FLOAT FINISHED.

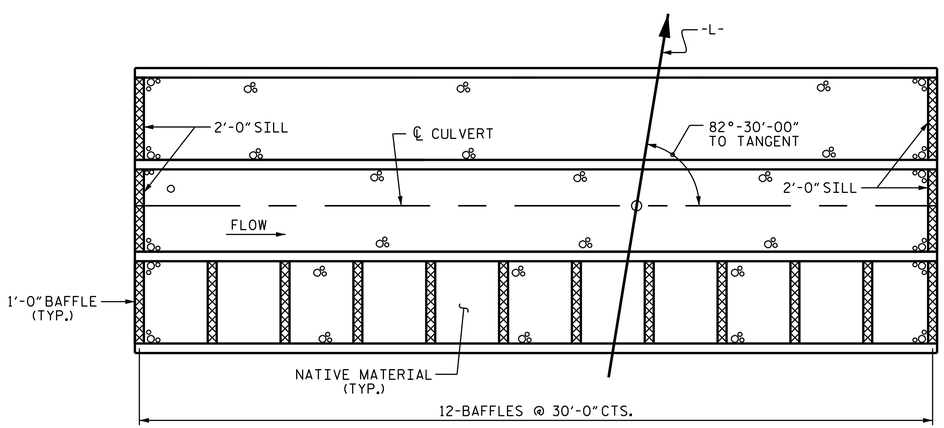


## PLAN

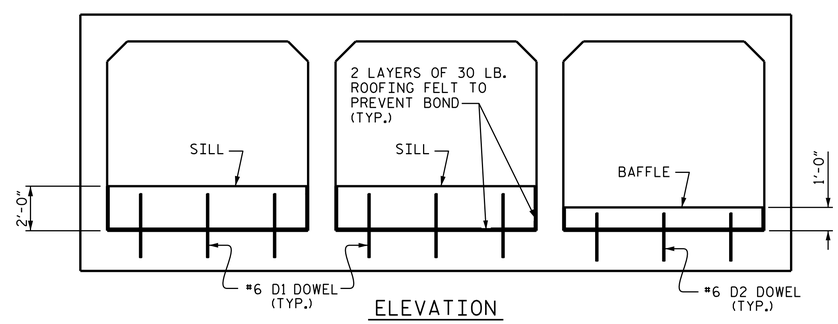


## ELEVATION

## CULVERT SILL/BAFFLE DETAILS

(LOOKING DOWNSTREAM)

PROJECT NO. U-2579B

FORSYTH COUNTY

STATION: 667+15.00 -L-

SHEET 3 OF 5

STATE OF NORTH CAROLINA
DEPARTMENT OF TRANSPORTATION
RALEIGH

# TRIPLE 12 FT. X 10 FT. CONCRETE BOX CULVERT 82°-30'-00" SKEW

NORTH CAROLINA PROFESSIONAL SEAL 23371 ENGINEER VIPUL A. PATEL

DocuSigned by: Vipul A. Patel 339B086CBE1C486 8/8/2014

| REVISIONS | | | | | | SHEET NO. |
|---|---|---|---|---|---|---|
| NO. | BY: | DATE: | NO. | BY: | DATE: | C-16 |
| 1 | | | 3 | | | TOTAL SHEETS |
| 2 | | | 4 | | | 30 |

STR. #21

| | | | |
|---|---|---|---|
| DRAWN BY : | T. H. CARROLL | DATE : | 12/19/13 |
| CHECKED BY : | J. P. MCCARTHA | DATE : | 2/7/14 |
| DESIGN ENGINEER OF RECORD: | T. H. CARROLL | DATE : | 6/14/14 |

05-AUG-2014 12:46
R:\Structures\Plans\Culverts\U2579B_SD_CU_21.dgn
lsutton