DocuSign Envelope ID: 5015C0A4-FAD6-4A84-B7E8-1AA386703C85

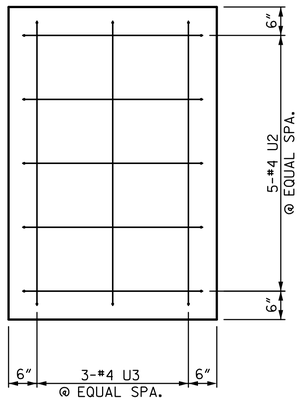

VIEW X-X

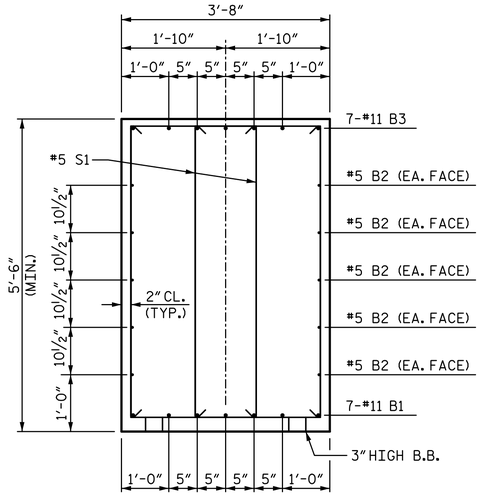

SECTION A-A

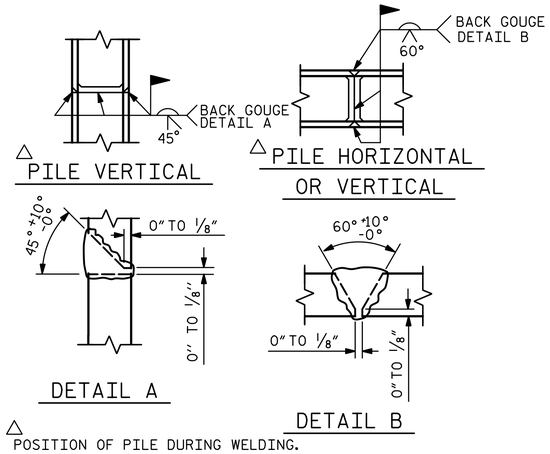

PILE SPLICE DETAILS

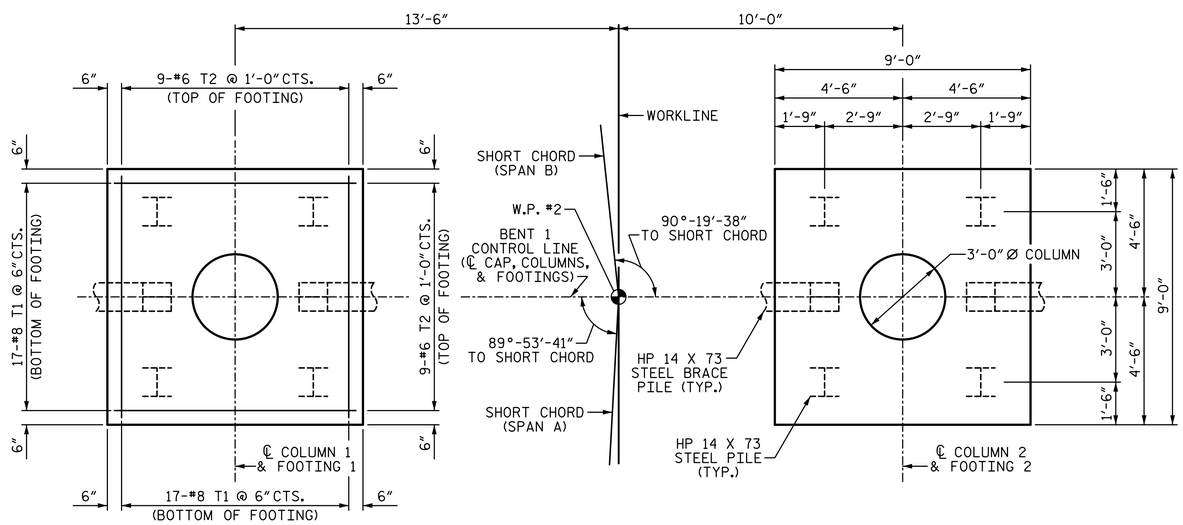

PLAN OF FOOTINGS

(PILE PLACEMENT, DIMENSIONS AND REINFORCING STEEL SHOWN ARE TYPICAL FOR EACH FOOTING)

BAR TYPES

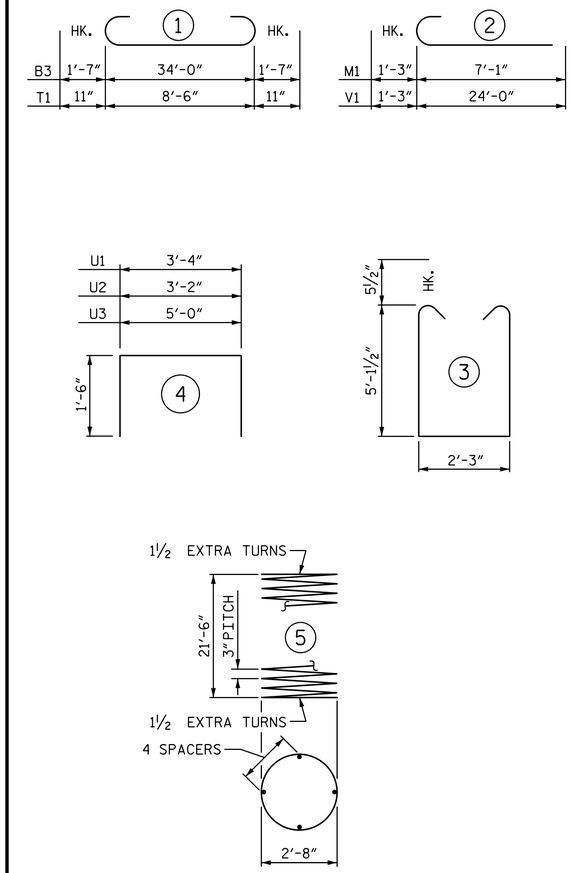

ALL BAR DIMENSIONS ARE OUT TO OUT

✳ THE "SP-1" SPIRAL REINFORCING STEEL SHALL BE W20 OR D-20 COLD DRAWN WIRE OR #4 PLAIN OR DEFORMED BAR.

BILL OF MATERIAL

BENT 1

BAR	NO.	SIZE	TYPE	LENGTH	WEIGHT
B1	7	11	STR	34'-2"	1271
B2	10	5	STR	34'-2"	356
B3	7	11	1	37'-2"	1382
B4	7	4	STR	13'-4"	62
M1	24	9	2	8'-4"	680
S1	116	5	3	13'-5"	1623
T1	68	8	1	10'-4"	1876
T2	36	6	STR	8'-6"	460
U1	36	4	4	6'-4"	152
U2	10	4	4	6'-2"	41
U3	6	4	4	8'-0"	32
V1	24	9	2	25'-3"	2060
SP-1	2	✳	5	734'-4"	981

REINFORCING STEEL	9995 LB
SPIRAL COL. REINF. STEEL	981 LB
CLASS "A" CONCRETE BREAKDOWN	
POUR 1 (FOOTINGS)	21.0 CY
POUR 2 (COLUMNS)	11.2 CY
POUR 3 (CAP)	26.3 CY
TOTAL	58.5 CY
HP 14 X 73 STEEL PILES	
NO. 12	510 LF

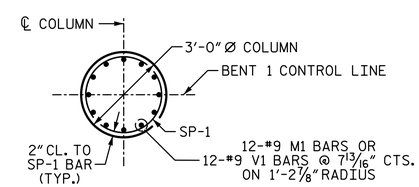

PLAN OF COLUMNS

(TYP. EACH COLUMN)

PROJECT NO. U-2579B

FORSYTH COUNTY

STATION: 28+50.16 -Y5-

SHEET 2 OF 2

STATE OF NORTH CAROLINA
DEPARTMENT OF TRANSPORTATION
RALEIGH

SUBSTRUCTURE

BENT 1

PLANS PREPARED BY:

SIMPSON ENGINEERS & ASSOCIATES
5640 Dillard Drive
Suite 200
Cary, NC 27518
(919) 852-0468
(919) 852-0598 (Fax)
www.slmpsonengr.com
LICENSURE NO. C-2521

NORTH CAROLINA PROFESSIONAL SEAL 023908 ENGINEER MARK A. AVERETTE
DocuSigned by: Mark A. Averette
8/15/2014

REVISIONS							
NO.	BY:	DATE:	NO.	BY:	DATE:	SHEET NO.	S-697
1			3			TOTAL SHEETS	S-707
2			4				

DRAWN BY:	R. SEALEY	DATE:	3-14
CHECKED BY:	M. AVERETTE	DATE:	3-14
DESIGN ENGINEER OF RECORD:	M. AVERETTE	DATE:	3-14

8/15/2014 3:30:35 PM G:\Projects\2013\U-2579B\Structures\Site 18\Site 18 Drawings\Final\U-2579B_ sd_18_bt1.dgn