DocuSign Envelope ID: 5015C0A4-FAD6-4A84-B7E8-1AA386703C85

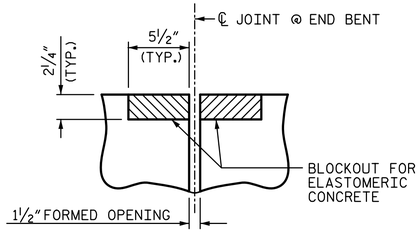

SECTION C-C

FOAM JOINT SEAL
(PRE-SAWED ELASTOMERIC
CONCRETE DIMENSIONS)

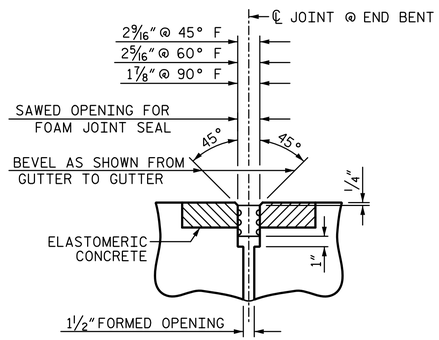

SECTION C-C

FOAM JOINT SEAL
(EXPANSION)

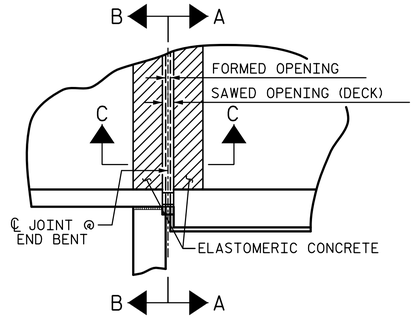

PLAN

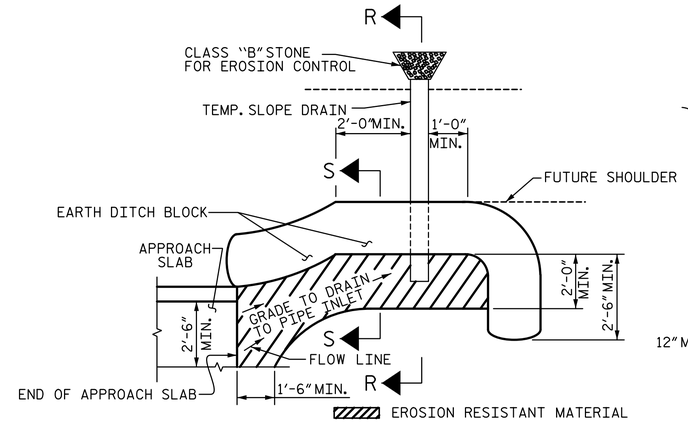

NOTE: IMMEDIATELY AFTER THE CONSTRUCTION OF THE APPROACH SLAB, THE CONTRACTOR SHALL PROVIDE TEMPORARY BERM AND SLOPE DRAIN. CONTRACTOR SHALL GRADE TO PIPE INLET AND PROVIDE EROSION RESISTANT MATERIAL AS SHOWN. THE EROSION RESISTANT MATERIAL SHALL BE EITHER 1) ASPHALT PLANT MIX, TYPE 1 OR TYPE 2, MIN. 2" DEPTH, 2) EROSION CONTROL MAT, OR 3) CONCRETE, AS DIRECTED BY THE ENGINEER. THE SLOPE DRAIN SHALL CONSIST OF A NON-PERFORATED TEMPORARY DRAINAGE PIPE, 12 INCHES IN DIAMETER.

PLAN VIEW

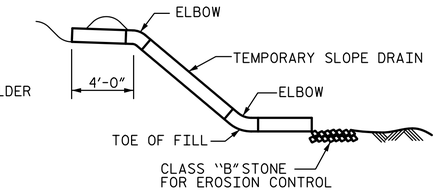

SECTION R-R

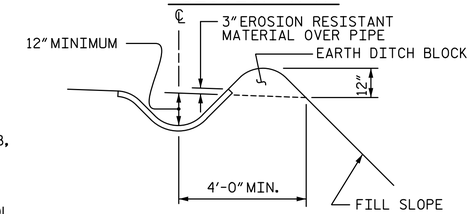

SECTION S-S

TEMPORARY BERM AND SLOPE DRAIN DETAILS

(TO BE USED WHEN SHOULDER BERM GUTTER IS REQUIRED)

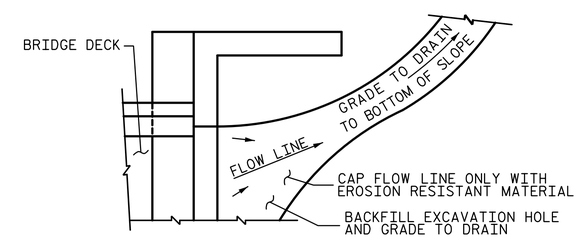

NOTE: IF THE APPROACH SLAB IS NOT CONSTRUCTED IMMEDIATELY AFTER THE BACKFILLING OF THE END BENT EXCAVATION, GRADE TO DRAIN TO THE BOTTOM OF THE SLOPE AND PROVIDE EROSION RESISTANT MATERIAL, SUCH AS FIBERGLASS ROVING OR AS DIRECTED BY THE ENGINEER TO PREVENT SOIL EROSION AND TO PROTECT THE AREA ADJACENT TO THE STRUCTURE. THE CONTRACTOR WILL BE REQUIRED TO REMOVE THESE MATERIALS PRIOR TO CONSTRUCTION OF THE APPROACH SLAB.

TEMPORARY DRAINAGE DETAIL

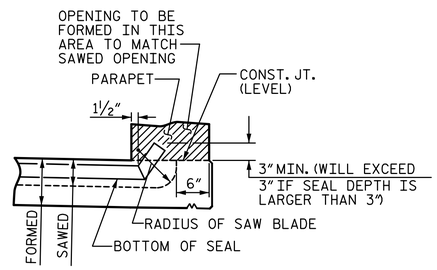

SECTION A-A

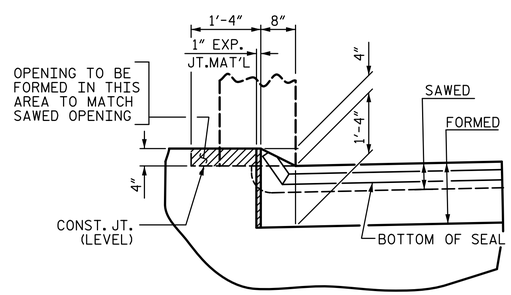

SECTION B-B

JOINT SEAL DETAILS @ END BENT

FOAM JOINT SEAL TO BE CUT, HEAT WELDED AND TURNED UP

THE JOINT SHALL BE SAWED PRIOR TO THE CASTING OF THE CONCRETE PARAPET.

ELASTOMERIC CONCRETE

LOCATION	ELASTOMERIC CONCRETE ✳ (CF)
END BENT 1	6.1
END BENT 2	6.1
TOTAL	12.2

✳ BASED ON THE MINIMUM BLOCKOUT SHOWN.

PROJECT NO. U-2579B
FORSYTH COUNTY
STATION: 28+50.16 -Y5-

SHEET 2 OF 2

STATE OF NORTH CAROLINA
DEPARTMENT OF TRANSPORTATION
RALEIGH

BRIDGE APPROACH
SLAB DETAILS

PLANS PREPARED BY:

SIMPSON ENGINEERS & ASSOCIATES
5640 Dillard Drive
Suite 200
Cary, NC 27518
(919) 852-0468
(919) 852-0598 (Fax)
www.simpsonengr.com
LICENSURE NO. C-2521

NORTH CAROLINA PROFESSIONAL SEAL 023908 ENGINEER MARK A. AVERETTE
DocuSigned by: Mark Averette
8/15/2014

REVISIONS							SHEET NO.
NO.	BY:	DATE:	NO.	BY:	DATE:		S-707
1			3				TOTAL SHEETS
2			4				S-707

DRAWN BY: T. BANKOVICH DATE: 3-14
CHECKED BY: M. AVERETTE DATE: 3-14
DESIGN ENGINEER OF RECORD: M. AVERETTE DATE: 3-14

8/15/2014 3:30:39 PM G:\Projects\2013\U-2579B\Structures\Site 18\Site 18 Drawings\Final\U-2579B_sd_18_as.dgn