DocuSign Envelope ID: 5015C0A4-FAD6-4A84-B7E8-1AA386703C85

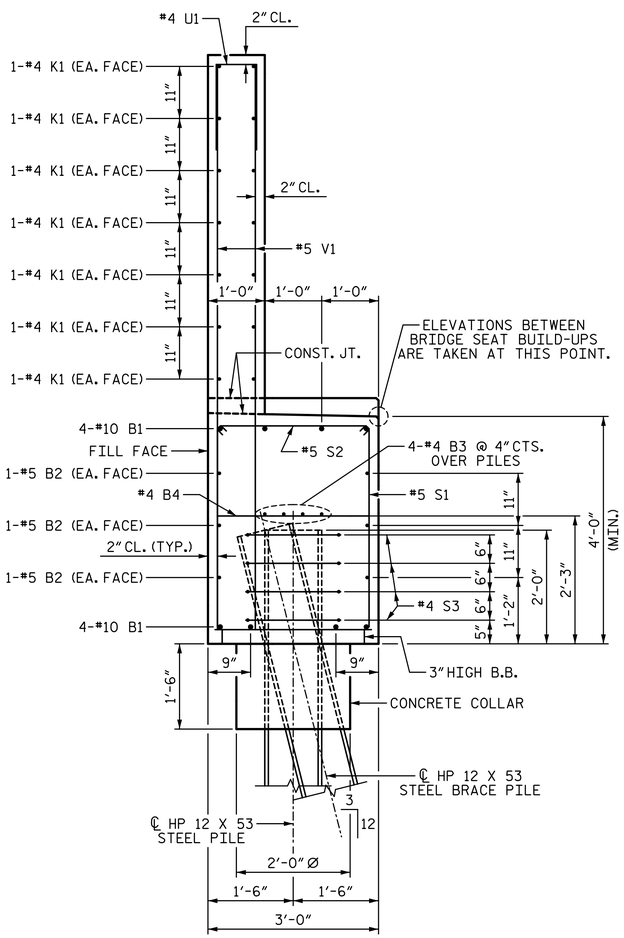

SECTION A-A

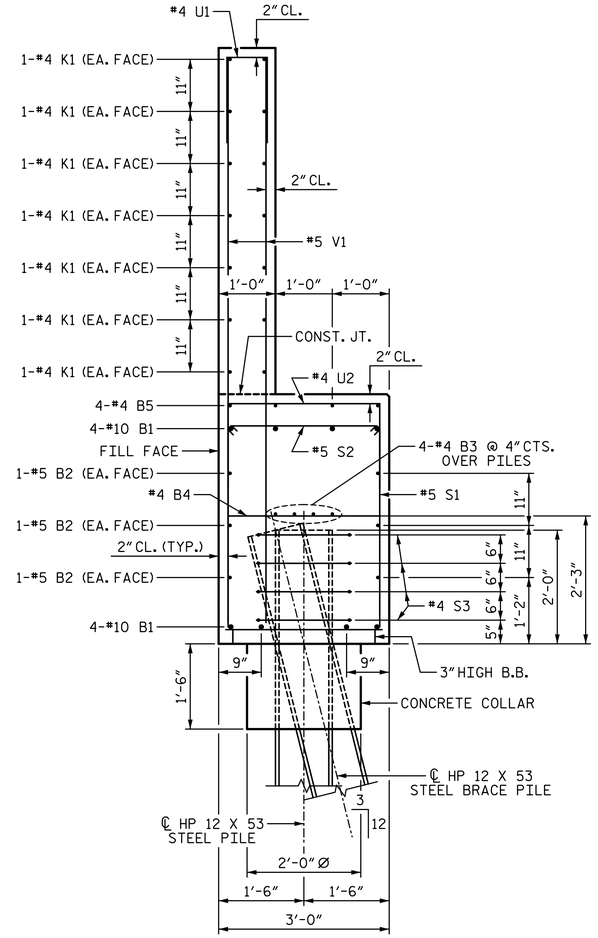

SECTION B-B

BAR TYPES

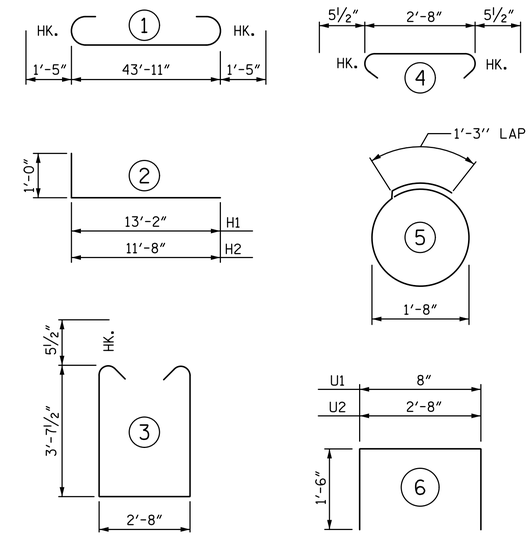

ALL BAR DIMENSIONS ARE OUT TO OUT

BILL OF MATERIAL

END BENT 1

BAR	NO.	SIZE	TYPE	LENGTH	WEIGHT
B1	8	10	1	46'-9"	1609
B2	6	5	STR	44'-1"	276
B3	8	4	STR	23'-3"	124
B4	11	4	STR	2'-8"	20
B5	8	4	STR	3'-5"	18
H1	48	6	2	14'-2"	1021
H2	50	6	2	12'-8"	951
K1	28	4	STR	23'-3"	435
K2	12	4	STR	3'-4"	27
S1	68	5	3	10'-10"	768
S2	68	5	4	3'-7"	254
S3	28	4	5	6'-6"	122
U1	37	4	6	3'-8"	91
U2	8	4	6	5'-8"	30
V1	74	5	STR	9'-9"	753
V2	76	5	STR	11'-7"	918
TOTAL REINFORCING STEEL					7417 LB

CLASS "A" CONCRETE BREAKDOWN	
POUR 1 (CAP, COLLARS, & LOWER WINGS)	25.2 CY
POUR 2 (BACKWALL & UPPER WINGS)	17.5 CY
TOTAL CLASS "A" CONCRETE	42.7 CY
HP 12 X 53 STEEL PILES	
NO. 7	280 LF

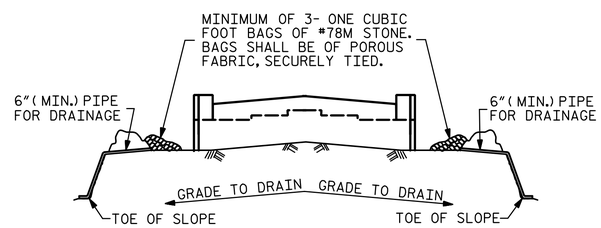

BAGGED STONE AND PIPE SHALL BE PLACED IMMEDIATELY AFTER COMPLETION OF END BENT EXCAVATION. PIPE MAY BE EITHER CONCRETE, CORRUGATED STEEL, CORRUGATED ALUMINUM ALLOY, OR CORRUGATED PLASTIC. PERFORATED PIPE WILL NOT BE ALLOWED.

BAGGED STONE SHALL REMAIN IN PLACE UNTIL THE ENGINEER DIRECTS THAT IT BE REMOVED. THE CONTRACTOR SHALL REMOVE AND DISPOSE OF SILT ACCUMULATIONS AT BAGGED STONE WHEN SO DIRECTED BY THE ENGINEER. BAGS SHALL BE REMOVED AND REPLACED WHENEVER THE ENGINEER DETERMINES THAT THEY HAVE DETERIORATED AND LOST THEIR EFFECTIVENESS.

NO SEPARATE PAYMENT WILL BE MADE FOR THIS WORK AND THE ENTIRE COST OF THIS WORK SHALL BE INCLUDED IN THE UNIT CONTRACT PRICE BID FOR THE SEVERAL PAY ITEMS.

TEMPORARY DRAINAGE AT END BENT

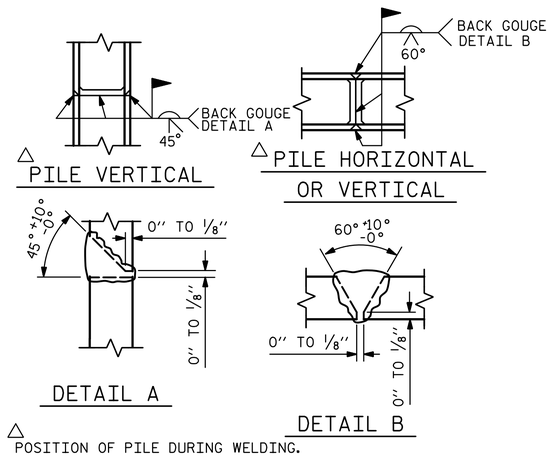

PILE SPLICE DETAILS

PROJECT NO. U-2579B
FORSYTH COUNTY
STATION: 28+50.16 -Y5-

SHEET 3 OF 3

STATE OF NORTH CAROLINA
DEPARTMENT OF TRANSPORTATION
RALEIGH

SUBSTRUCTURE

END BENT 1

PLANS PREPARED BY:
SIMPSON ENGINEERS & ASSOCIATES
5640 Dillard Drive
Suite 200
Cary, NC 27518
(919) 852-0468
(919) 852-0598 (Fax)
www.simpsonengr.com
LICENSURE NO. C-2521

NORTH CAROLINA PROFESSIONAL SEAL 025908 ENGINEER MARK A. AVERETTE
Docu Signed by: Mark Averette
8/15/2014

REVISIONS							SHEET NO.
NO.	BY:	DATE:	NO.	BY:	DATE:		S-695
1			3				TOTAL SHEETS
2			4				S-707

DRAWN BY: T. BANKOVICH DATE: 3-14
CHECKED BY: M. AVERETTE DATE: 3-14
DESIGN ENGINEER OF RECORD: M. AVERETTE DATE: 3-14

8/15/2014 3:30:35 PM G:\Projects\2013\U-2579B\Structures\Site 18\Site 18 Drawings\Final\U-2579B_sd_18_eb1.dgn