DocuSign Envelope ID: 5015C0A4-FAD6-4A84-B7E8-1AA386703C85

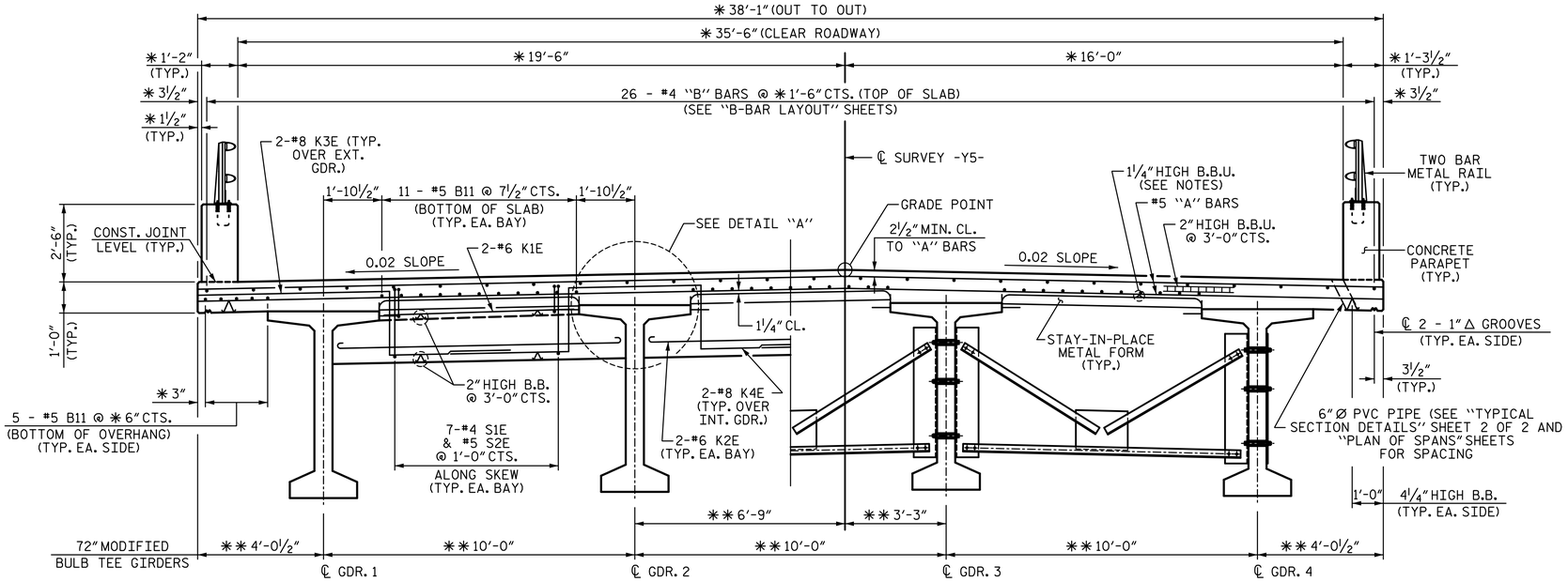

END BENT DIAPHRAGMS

INTERMEDIATE DIAPHRAGMS

TYPICAL SECTION

NOTES:

✱ RADIAL DIMENSIONS

✱✱ DIMENSIONS SHOWN ARE TO THE ARCS CONCENTRIC WITH THE ℄ SURVEY -Y5-. GIRDERS ARE ON THE CHORDS OF THE CONCENTRIC ARCS.

PROVIDE 1¼" HIGH BEAM BOLSTERS UPPER AT 4'-0" CTS. ATOP THE METAL STAY-IN-PLACE FORMS TO SUPPORT THE BOTTOM MAT OF "A" BARS. WHEN USING REMOVABLE FORMS, PROVIDE CONTINUOUS HIGH CHAIRS FOR METAL DECK (C.H.C.M.) @ 4'-0" CTS. WITH A HEIGHT TO SUPPORT THE BOTTOM MAT OF "A" BARS A CLEAR DISTANCE OF 2½" ABOVE THE TOP OF THE REMOVABLE FORM.

LONGITUDINAL STEEL MAY BE SHIFTED SLIGHTLY, AS NECESSARY, TO AVOID INTERFERENCE WITH STIRRUPS IN PRESTRESSED CONCRETE GIRDERS.

CONCRETE PARAPET IN A CONTINUOUS UNIT SHALL NOT BE CAST UNTIL ALL SLAB CONCRETE IN THAT UNIT HAS BEEN CAST AND HAS REACHED A MINIMUM COMPRESSIVE STRENGTH OF 3,000 PSI.

PREVIOUSLY CAST CONCRETE IN A CONTINUOUS UNIT SHALL HAVE ATTAINED A MINIMUM COMPRESSIVE STRENGTH OF 3,000 PSI BEFORE ADDITIONAL CONCRETE IS CAST IN THE UNIT.

SEE "TYPICAL SECTION DETAILS" SHEET 2 OF 2 AND "PLAN OF SPANS" SHEETS FOR DRAINAGE DETAILS AND LOCATIONS.

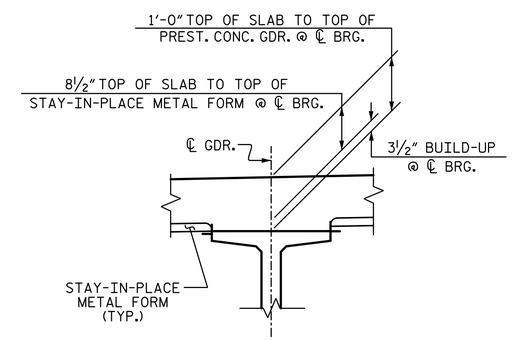

DETAIL "A"

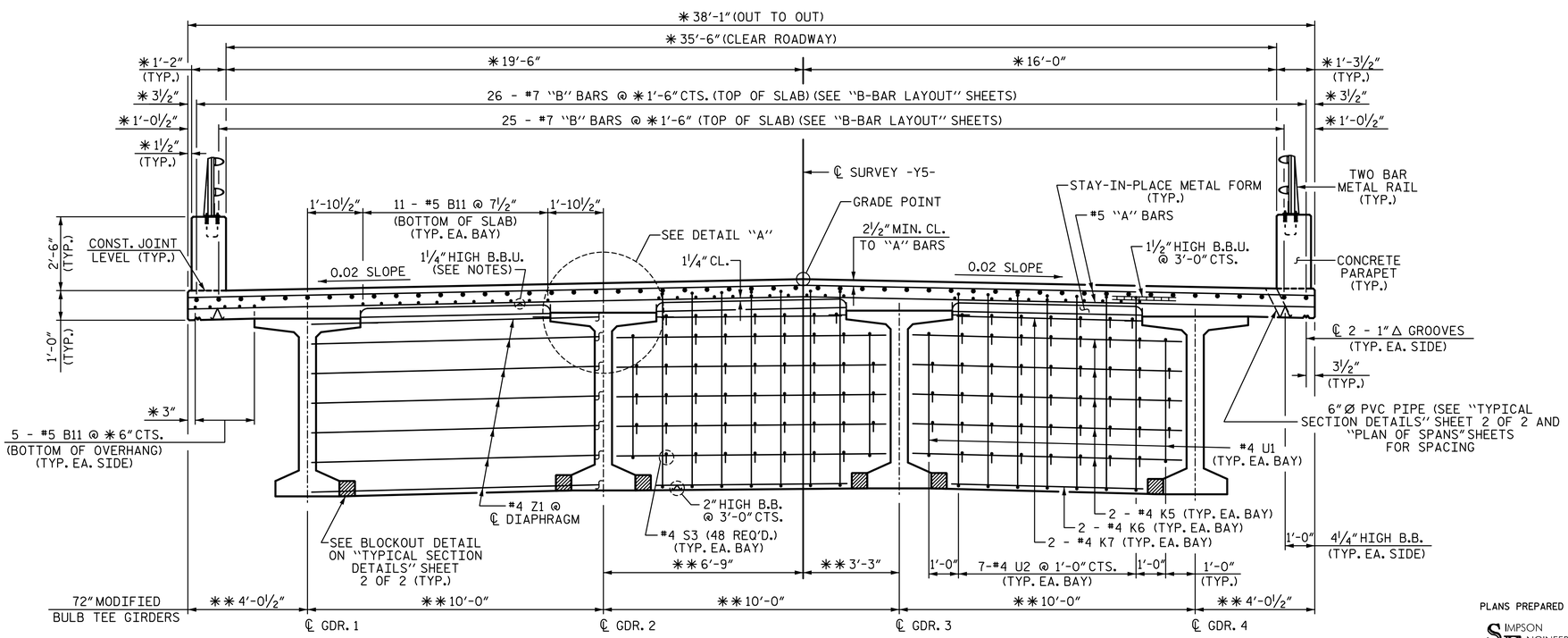

CONTINUOUS BENT DIAPHRAGMS

(BENTS 1, 2, & 3)

TYPICAL SECTION

PROJECT NO. U-2579B

FORSYTH COUNTY

STATION: 28+50.16 -Y5-

STATE OF NORTH CAROLINA
DEPARTMENT OF TRANSPORTATION
RALEIGH

SUPERSTRUCTURE

TYPICAL SECTION

DRAWN BY: R. SEALEY	DATE: 3-14	
CHECKED BY: M. AVERETTE	DATE: 3-14	
DESIGN ENGINEER OF RECORD: M. AVERETTE	DATE: 3-14	

PLANS PREPARED BY:

SIMPSON ENGINEERS & ASSOCIATES
5640 Dillard Drive
Suite 200
Cary, NC 27518
(919) 852-0468
(919) 852-0598 (Fax)
www.simpsonengr.com
LICENSURE NO. C-2521

NORTH CAROLINA PROFESSIONAL SEAL 023908 ENGINEER MARK A. AVERETTE
DocuSigned by: Mark Averette
8/15/2014

REVISIONS						SHEET NO.
NO.	BY:	DATE:	NO.	BY:	DATE:	S-665
1			3			TOTAL SHEETS
2			4			S-707

8/15/2014 3:30:24 PM G:\Projects\2013\U-2579B\Structures\Site 18\Site 18 Drawings\Final\U-2579B_ sd_18_ts.dgn