DocuSign Envelope ID: 5015C0A4-FAD6-4A84-B7E8-1AA386703C85

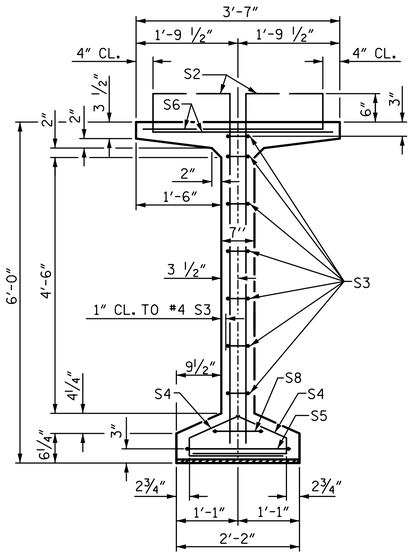

SECTION A-A

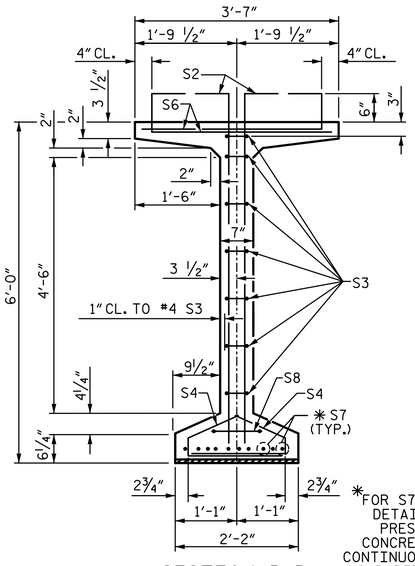

SECTION B-B

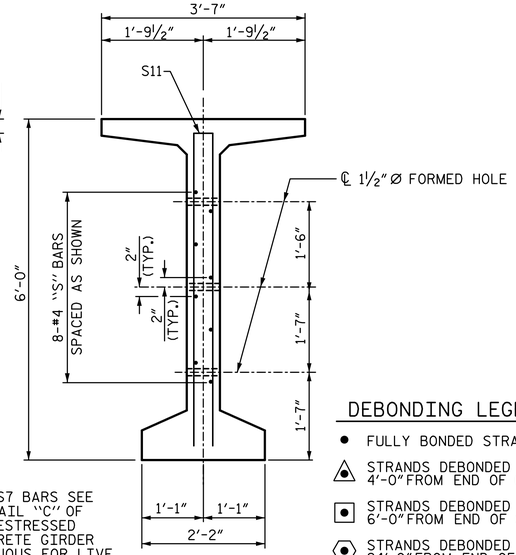

SECTION C-C

(S1, S6 AND S9 BARS NOT SHOWN)

✱FOR S7 BARS SEE DETAIL "C" OF PRESTRESSED CONCRETE GIRDER CONTINUOUS FOR LIVE LOAD DETAILS SHEET

DEBONDING LEGEND

- ● FULLY BONDED STRANDS
- STRANDS DEBONDED FOR 4'-0" FROM END OF GIRDER
- STRANDS DEBONDED FOR 6'-0" FROM END OF GIRDER
- STRANDS DEBONDED FOR 24'-0" FROM END OF GIRDER

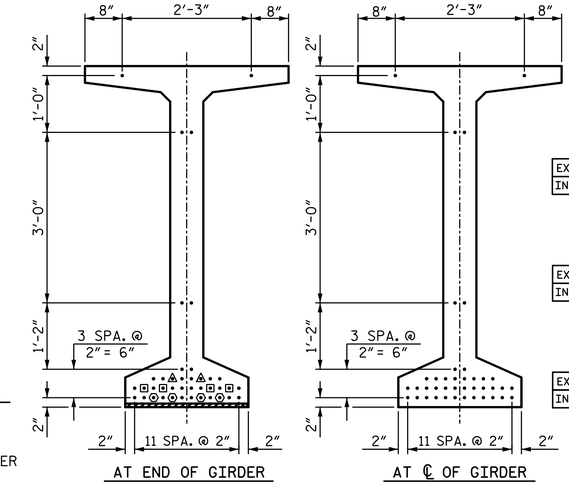

0.6" Ø LOW RELAXATION STRAND LAYOUT

0.6" Ø L. R. GRADE 270 STRANDS

AREA (SQUARE INCHES)	ULTIMATE STRENGTH (LBS. PER STRAND)	APPLIED PRESTRESS (LBS. PER STRAND)
0.217	58,600	43,950

REINFORCING STEEL FOR ONE GDR

	BAR	NUMBER	SIZE	TYPE	LENGTH	WEIGHT
EXTERIOR GDR.	S1	156	5	1	6'-10"	1112
INTERIOR GDR.	S1	156	5	1	6'-10"	1112
	S2	24	6	1	6'-10"	246
	S3	14	4	2	8'-5"	79
	S4	84	4	3	3'-0"	168
	S5	1	5	2	9'-10"	10
EXTERIOR GDR.	S6	180	5	4	4'-4"	814
INTERIOR GDR.	S6	180	5	4	4'-4"	814
	✱ S7	10	5	STR	3'-8"	38
	S8	2	5	2	9'-0"	19
	S9	47	5	STR	3'-3"	159
	S10	1	3	STR	1'-10"	1
EXTERIOR GDR.	S11	8	5	5	11'-6"	96
INTERIOR GDR.	S11	8	5	5	11'-6"	96
	S12	16	4	STR	8'-0"	86

✱NOTE: S7 BARS SHALL BE BENT BEFORE SHIPMENT. HEAT BENDING SHALL NOT BE ALLOWED.

BAR TYPES

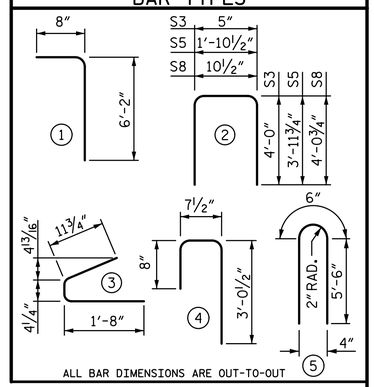

ALL BAR DIMENSIONS ARE OUT-TO-OUT

QUANTITIES FOR ONE GIRDER

	REINFORCING STEEL	8000 PSI CONCRETE	0.6" Ø L.R. STRANDS
	LB	CY	No.
EXTERIOR GIRDER	2828	24.6	40
INTERIOR GIRDER	2828	24.6	40

GIRDERS REQUIRED

NUMBER	LENGTH	TOTAL LENGTH
4	114'-10"	459'-4"

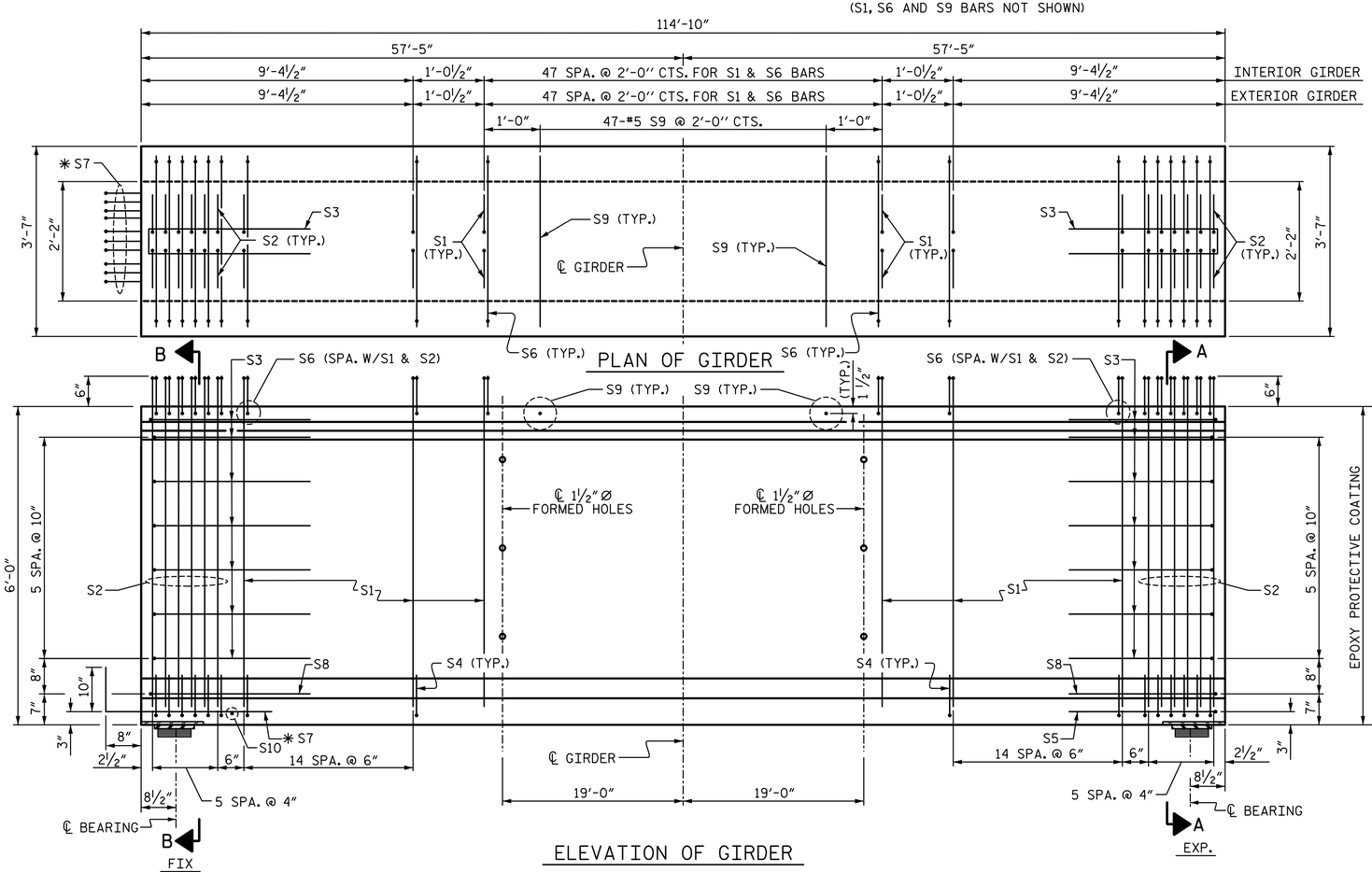

ELEVATION OF GIRDER

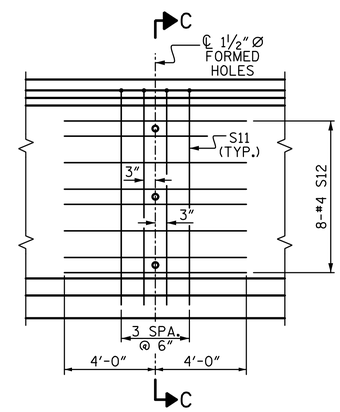

PARTIAL ELEVATION

(SHOWING INTERMEDIATE STEEL DIAPHRAGM REINFORCING STEEL FOR INTERIOR & EXTERIOR GIRDERS)

PROJECT NO. U-2579B

FORSYTH COUNTY

STATION: 28+50.16 -Y5-

SHEET 4 OF 5

STATE OF NORTH CAROLINA
DEPARTMENT OF TRANSPORTATION
RALEIGH

SUPERSTRUCTURE

72" PRESTRESSED CONCRETE MODIFIED BULB TEE CONTINUOUS FOR LIVE LOAD

(SPAN D)

DRAWN BY: R. SEALEY	DATE: 3-14	
CHECKED BY: M. AVERETTE	DATE: 3-14	
DESIGN ENGINEER OF RECORD: M. AVERETTE	DATE: 3-14	

PLANS PREPARED BY:

SIMPSON ENGINEERS & ASSOCIATES
5640 Dillard Drive
Suite 200
Cary, NC 27518
(919) 852-0468
(919) 852-0598 (Fax)
www.simpsonengr.com
LICENSURE NO. C-2521

NORTH CAROLINA PROFESSIONAL SEAL 023908 ENGINEER MARK A. AVERETTE
DocuSigned by: Mark Averette
8/15/2014

REVISIONS							
NO.	BY:	DATE:	NO.	BY:	DATE:	SHEET NO.	S-679
1			3			TOTAL SHEETS	S-707
2			4				

8/15/2014 3:30:28 PM G:\Projects\2013\U-2579B\Structures\Site 18\Site 18 Drawings\Final\U-2579B_ sd_18_pcg.dgn