DocuSign Envelope ID: 5015C0A4-FAD6-4A84-B7E8-1AA386703C85

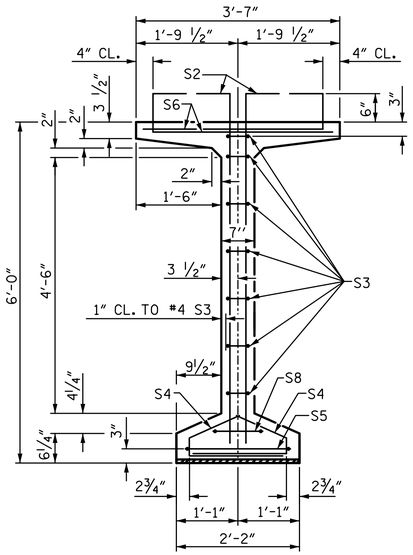

SECTION A-A

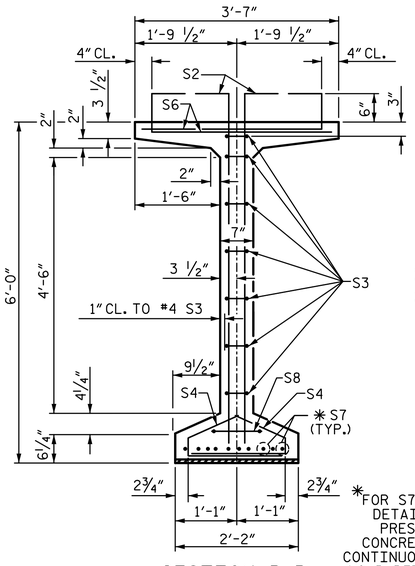

SECTION B-B

✱FOR S7 BARS SEE DETAIL "C" OF PRESTRESSED CONCRETE GIRDER CONTINUOUS FOR LIVE LOAD DETAILS SHEET

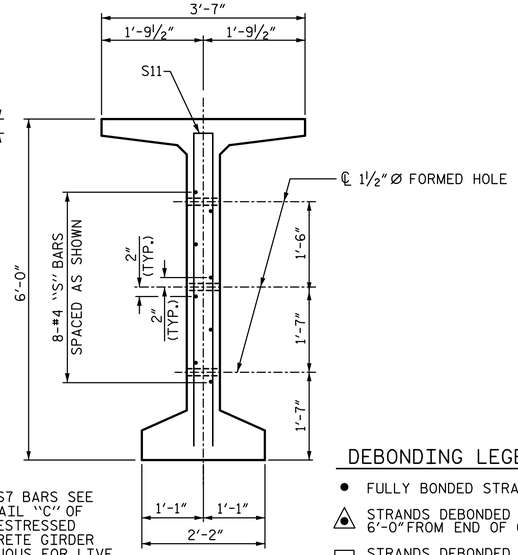

SECTION C-C

(S1, S6 AND S9 BARS NOT SHOWN)

DEBONDING LEGEND

- ● FULLY BONDED STRANDS
- ◬ STRANDS DEBONDED FOR 6'-0" FROM END OF GIRDER
- ⊡ STRANDS DEBONDED FOR 10'-0" FROM END OF GIRDER

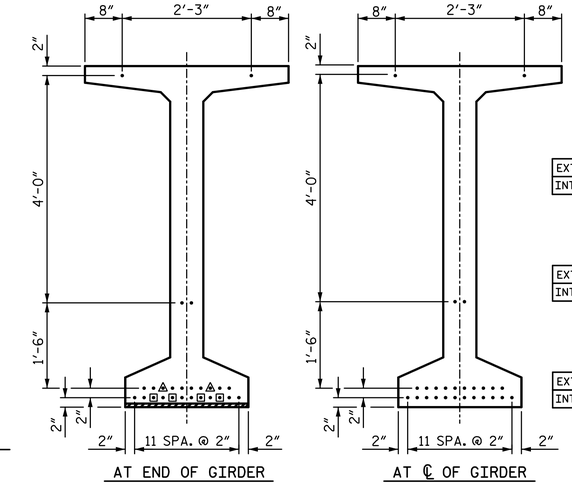

0.6"Ø LOW RELAXATION STRAND LAYOUT

0.6"Ø L. R. GRADE 270 STRANDS

AREA (SQUARE INCHES)	ULTIMATE STRENGTH (LBS. PER STRAND)	APPLIED PRESTRESS (LBS. PER STRAND)
0.217	58,600	43,950

REINFORCING STEEL FOR ONE GDR

	BAR	NUMBER	SIZE	TYPE	LENGTH	WEIGHT
EXTERIOR GDR.	S1	136	5	1	6'-10"	969
INTERIOR GDR.	S1	136	5	1	6'-10"	969
	S2	24	6	1	6'-10"	246
	S3	14	4	2	8'-5"	79
	S4	84	4	3	3'-0"	168
	S5	1	5	2	9'-10"	10
EXTERIOR GDR.	S6	160	5	4	4'-4"	723
INTERIOR GDR.	S6	160	5	4	4'-4"	723
	✱ S7	10	5	STR	3'-8"	38
	S8	2	5	2	9'-0"	19
	S9	37	5	STR	3'-3"	125
	S10	1	3	STR	1'-10"	1
EXTERIOR GDR.	S11	4	5	5	11'-6"	48
INTERIOR GDR.	S11	4	5	5	11'-6"	48
	S12	8	4	STR	8'-0"	43

✱ NOTE: S7 BARS SHALL BE BENT BEFORE SHIPMENT. HEAT BENDING SHALL NOT BE ALLOWED.

BAR TYPES

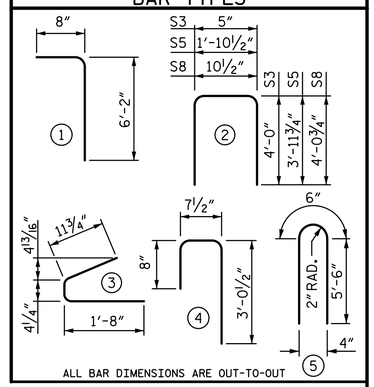

ALL BAR DIMENSIONS ARE OUT-TO-OUT

QUANTITIES FOR ONE GIRDER

	REINFORCING STEEL	5500 PSI CONCRETE	0.6"Ø L.R. STRANDS
	LB	CY	No.
EXTERIOR GIRDER	2469	20.6	26
INTERIOR GIRDER	2469	20.6	26

GIRDERS REQUIRED

NUMBER	LENGTH	TOTAL LENGTH
4	96'-1 1/2"	384'-6"

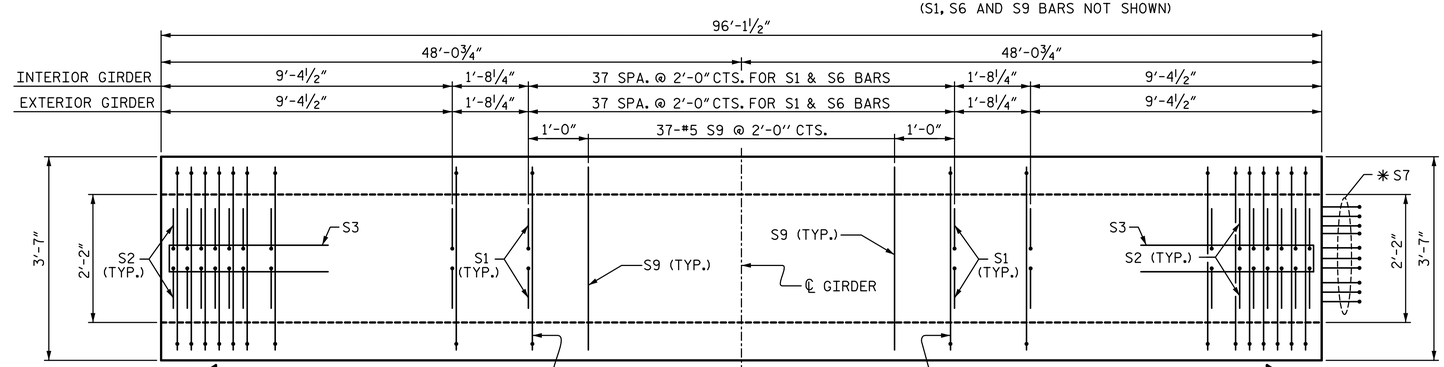

PLAN OF GIRDER

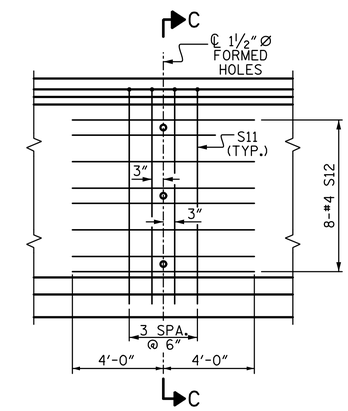

PARTIAL ELEVATION

SHOWING INTERMEDIATE STEEL DIAPHRAGM REINFORCING STEEL FOR INTERIOR & EXTERIOR GIRDERS

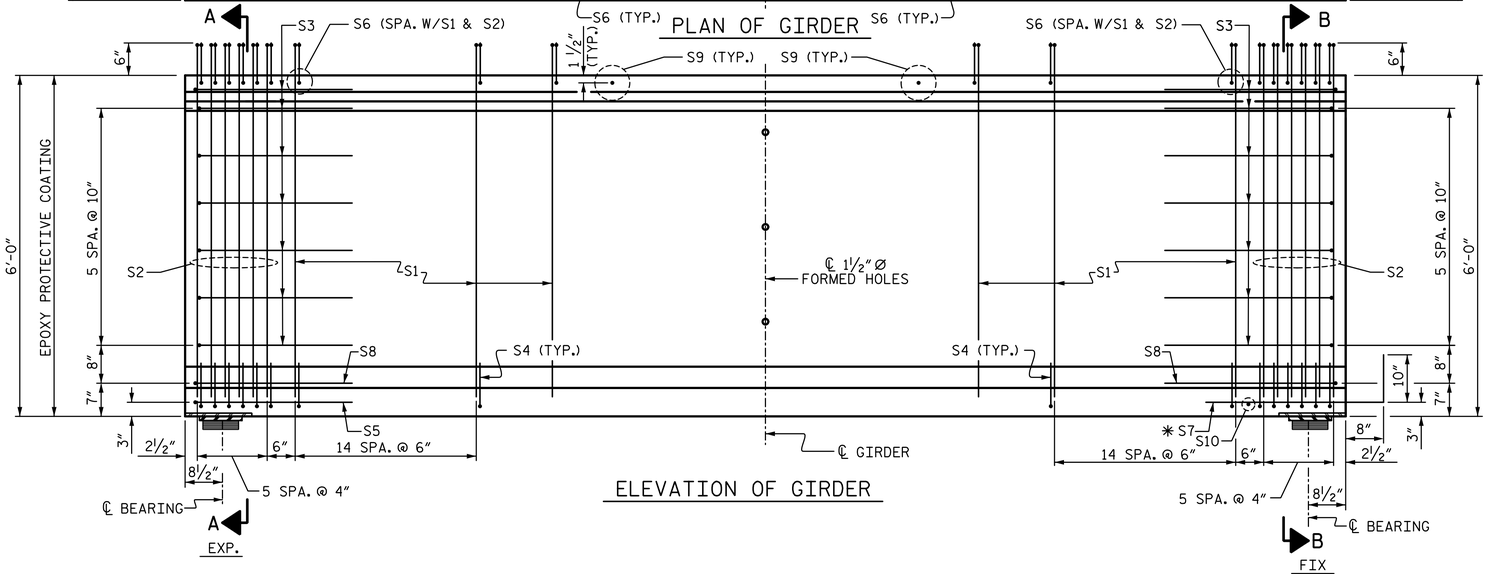

ELEVATION OF GIRDER

PROJECT NO. U-2579B

FORSYTH COUNTY

STATION: 28+50.16 -Y5-

SHEET 1 OF 5

STATE OF NORTH CAROLINA
DEPARTMENT OF TRANSPORTATION
RALEIGH

SUPERSTRUCTURE

72" PRESTRESSED CONCRETE MODIFIED BULB TEE CONTINUOUS FOR LIVE LOAD

(SPAN A)

PLANS PREPARED BY:

SIMPSON ENGINEERS & ASSOCIATES

5640 Dillard Drive
Suite 200
Cary, NC 27518
(919) 852-0468
(919) 852-0598 (Fax)
www.simpsonengr.com

LICENSURE NO. C-2521

NORTH CAROLINA PROFESSIONAL SEAL 023908 ENGINEER MARK A. AVERETTE

DocuSigned by: Mark Averette

8/15/2014

DRAWN BY:	R. SEALEY	DATE:	3-14
CHECKED BY:	M. AVERETTE	DATE:	3-14
DESIGN ENGINEER OF RECORD:	M. AVERETTE	DATE:	3-14

REVISIONS								SHEET NO.
NO.	BY:	DATE:	NO.	BY:	DATE:			S-676
1			3					TOTAL SHEETS
2			4					S-707

8/15/2014 3:30:27 PM G:\Projects\2013\U-2579B\Structures\Site 18\Site 18 Drawings\Final\U-2579B_ sd_18_pcg.dgn