DocuSign Envelope ID: 5015C0A4-FAD6-4A84-B7E8-1AA386703C85

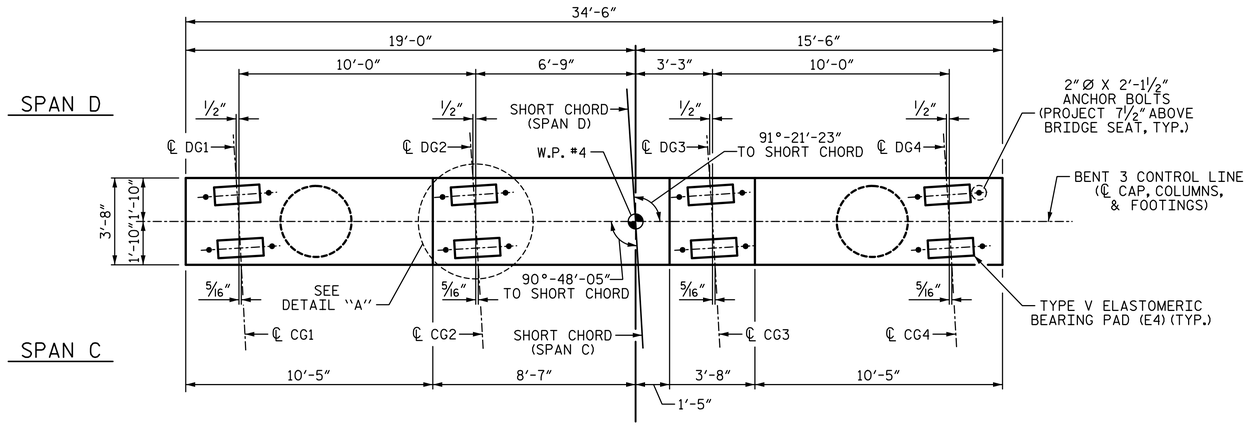

PLAN

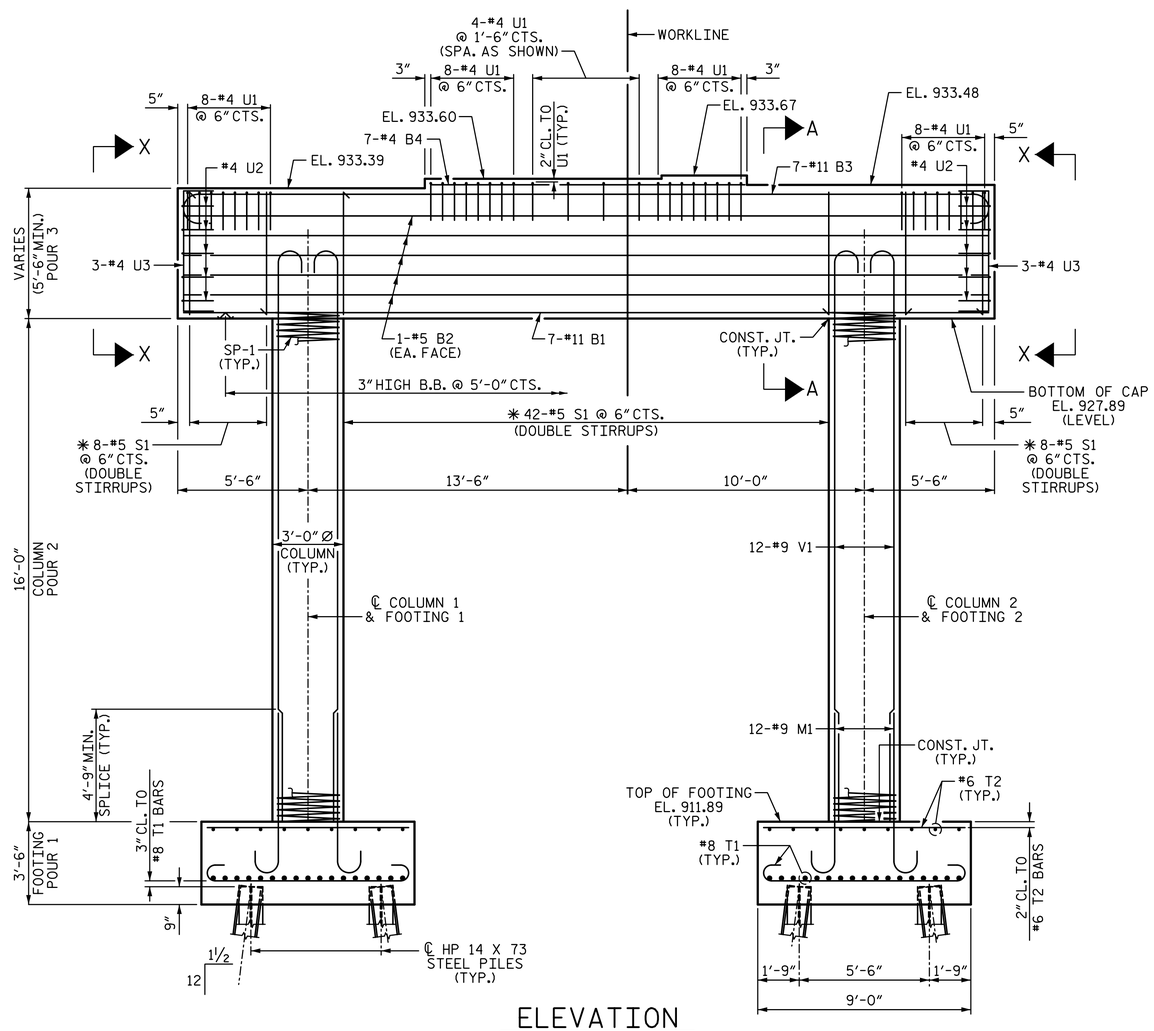

ELEVATION

(DIMENSIONS AND REINFORCING STEEL ARE TYPICAL FOR EACH COLUMN & FOOTING)

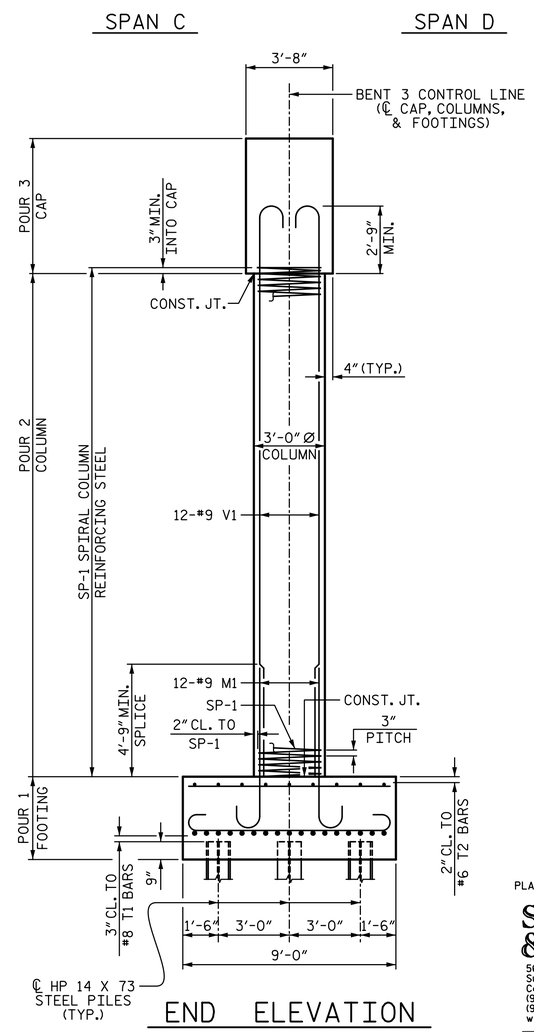

END ELEVATION

NOTES:

✱ INVERT ALTERNATE STIRRUPS.

STIRRUPS AND "U" BARS IN CAP MAY BE SHIFTED AS NECESSARY TO CLEAR ANCHOR BOLTS.

HOOKS ON "M", "T", & "V" BARS MAY BE TURNED AS NECESSARY FOR PLACING REINFORCING STEEL.

SEE GENERAL DRAWING "FOUNDATION LAYOUT" FOR ADDITIONAL NOTES FOR DRIVING PILES.

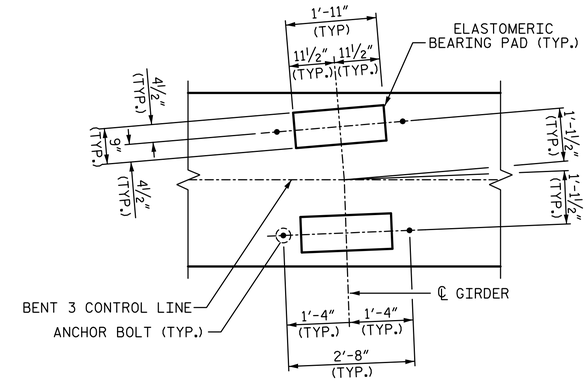

DETAIL "A"

(TYP. EA. GIRDER)

PROJECT NO. U-2579B

FORSYTH COUNTY

STATION: 28+50.16 -Y5-

SHEET 1 OF 2

STATE OF NORTH CAROLINA
DEPARTMENT OF TRANSPORTATION
RALEIGH

SUBSTRUCTURE

BENT 3

DRAWN BY: R. SEALEY	DATE: 3-14		
CHECKED BY: M. AVERETTE	DATE: 3-14		
DESIGN ENGINEER OF RECORD: M. AVERETTE	DATE: 3-14		

PLANS PREPARED BY:

SIMPSON ENGINEERS & ASSOCIATES

5640 Dillard Drive
Suite 200
Cary, NC 27518
(919) 852-0468
(919) 852-0598 (Fax)
www.simpsonengr.com

LICENSURE NO. C-2521

NORTH CAROLINA PROFESSIONAL SEAL 023908 ENGINEER MARK A. AVERETTE

DocuSigned by: Mark A. Averette

8/15/2014

REVISIONS						
NO.	BY:	DATE:	NO.	BY:	DATE:	SHEET NO. S-700
1			3			TOTAL SHEETS S-707
2			4			

8/15/2014 3:30:37 PM G:\Projects\2013\U-2579B\Structures\Site 18\Site 18 Drawings\Final\U-2579B_ sd_18_bt3.dgn