DocuSign Envelope ID: 5015C0A4-FAD6-4A84-B7E8-1AA386703C85

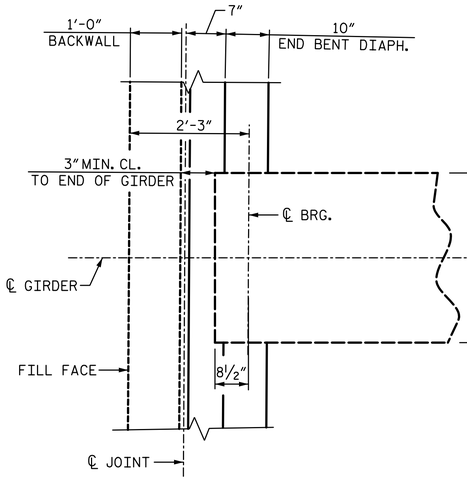

END BENT DIAPHRAGM

(END BENT 1 SHOWN, END BENT 2 SIMILAR)

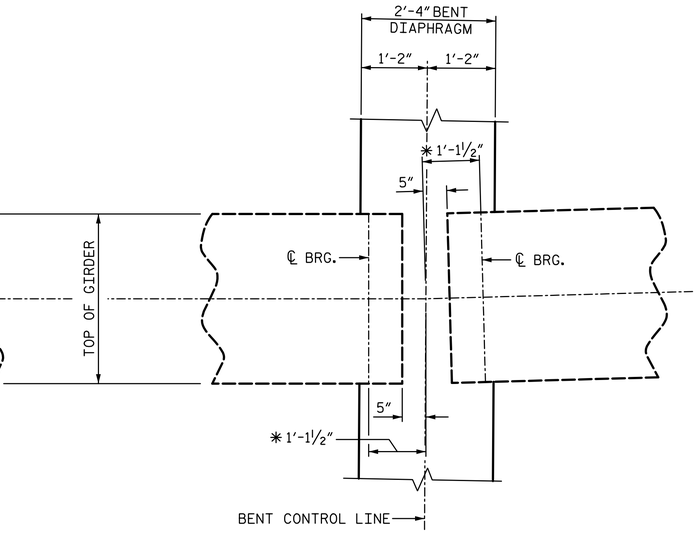

CONTINUOUS BENT DIAPHRAGM

(@ BENTS 1, 2, & 3)
✱ MEASURED ALONG ℄ GIRDER

PLAN OF DIAPHRAGMS

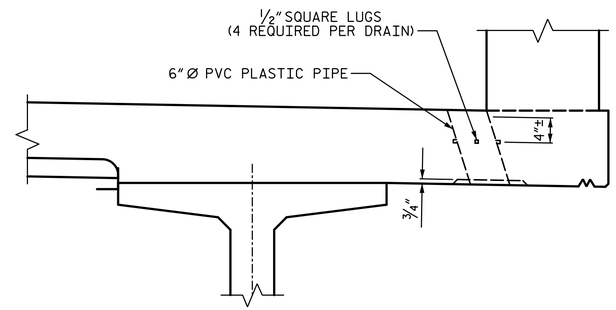

ELEVATION

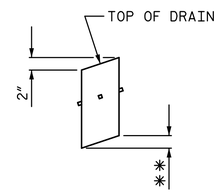

PIPE DETAIL

✱✱ TO BE SET TO MATCH SLOPE OF BOTTOM OF OVERHANGS (15 DRAINS REQUIRED)

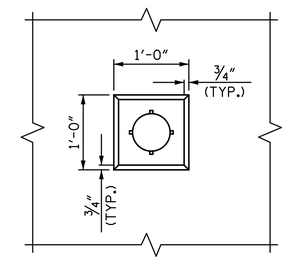

PLAN OF RECESS

DRAIN DETAILS

TOP OF FLOOR DRAIN TO BE SET ⅜" BELOW SURFACE OF SLAB.

4 - ½" SQUARE LUGS TO BE GLUED TO THE PVC PLASTIC PIPE AT EQUAL SPACES AROUND THE PIPE DRAIN APPROXIMATELY 4" FROM THE TOP OF PIPE.

THE 6" Ø PVC PLASTIC PIPE AND FITTINGS SHALL BE SCHEDULE 40 AND CONFORM TO ASTM D1785.

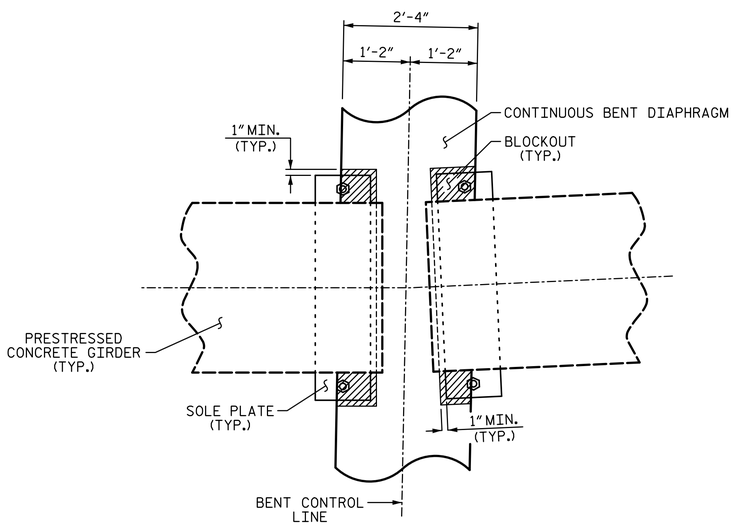

PLAN

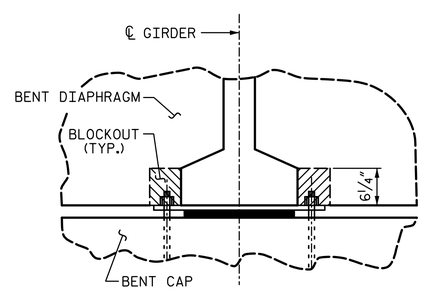

SECTION

CONTUNUOUS BENT DIAPHRAGM BLOCK-OUT DETAIL

(@ BENTS 1, 2, & 3)

PROJECT NO. U-2579B

FORSYTH COUNTY

STATION: 28+50.16 -Y5-

SHEET 2 OF 2

STATE OF NORTH CAROLINA
DEPARTMENT OF TRANSPORTATION
RALEIGH
SUPERSTRUCTURE

TYPICAL SECTION DETAILS

PLANS PREPARED BY:

SIMPSON ENGINEERS & ASSOCIATES
5640 Dillard Drive
Suite 200
Cary, NC 27518
(919) 852-0468
(919) 852-0598 (Fax)
www.simpsonengr.com
LICENSURE NO. C-2521

NORTH CAROLINA PROFESSIONAL SEAL 023908 ENGINEER MARK A. AVERETTE
DocuSigned by: Mark Averette
8/15/2014

REVISIONS								SHEET NO.
NO.	BY:	DATE:	NO.	BY:	DATE:			S-667
1			3					TOTAL SHEETS
2			4					S-707

DRAWN BY:	R. SEALEY	DATE:	3-14
CHECKED BY:	M. AVERETTE	DATE:	3-14
DESIGN ENGINEER OF RECORD:	M. AVERETTE	DATE:	3-14

8/15/2014 3:30:25 PM G:\Projects\2013\U-2579B\Structures\Site 18\Site 18 Drawings\Final\U-2579B_ sd_18_ts.dgn