DocuSign Envelope ID: 5015C0A4-FAD6-4A84-B7E8-1AA386703C85

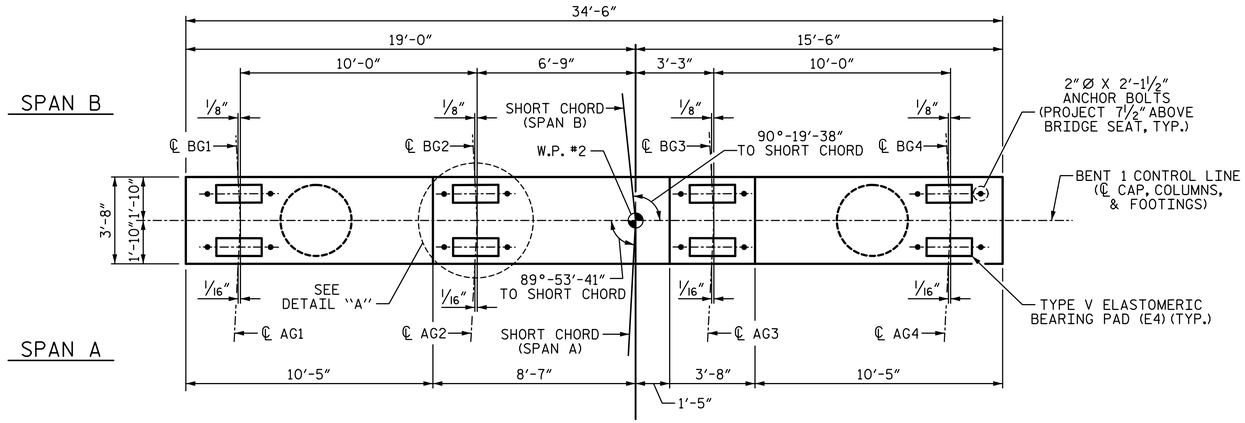

PLAN

NOTES:

✱ INVERT ALTERNATE STIRRUPS.

STIRRUPS AND "U" BARS IN CAP MAY BE SHIFTED AS NECESSARY TO CLEAR ANCHOR BOLTS.

HOOKS ON "M", "T", & "V" BARS MAY BE TURNED AS NECESSARY FOR PLACING REINFORCING STEEL.

SEE GENERAL DRAWING "FOUNDATION LAYOUT" FOR ADDITIONAL NOTES FOR DRIVING PILES.

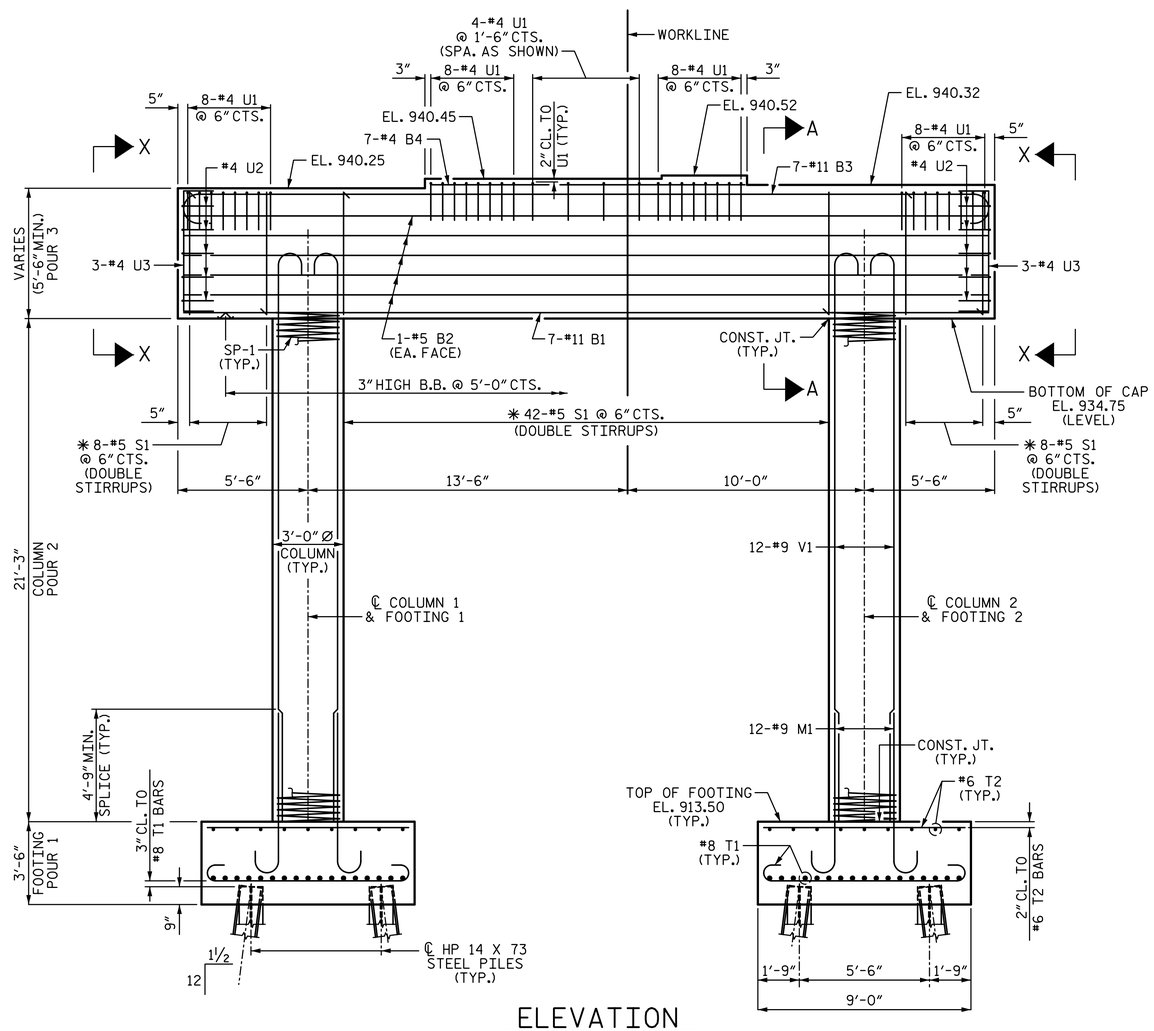

ELEVATION

(DIMENSIONS AND REINFORCING STEEL ARE TYPICAL FOR EACH COLUMN & FOOTING)

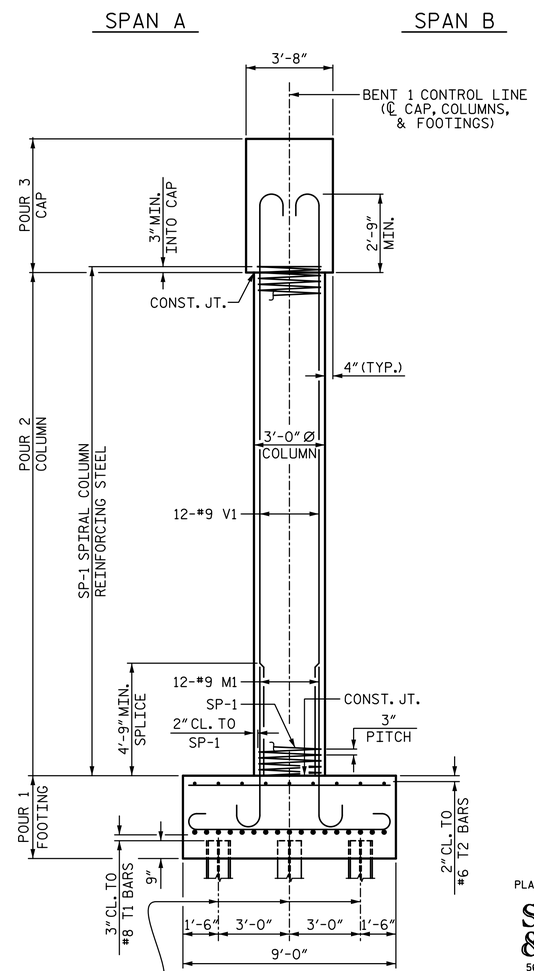

END ELEVATION

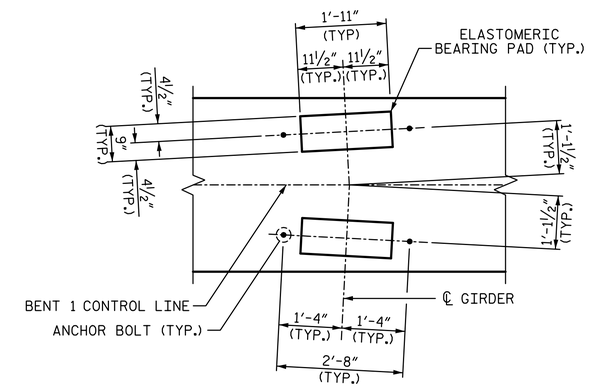

DETAIL "A"

(TYP. EA. GIRDER)

PROJECT NO. U-2579B

FORSYTH COUNTY

STATION: 28+50.16 -Y5-

SHEET 1 OF 2

STATE OF NORTH CAROLINA
DEPARTMENT OF TRANSPORTATION
RALEIGH

SUBSTRUCTURE

BENT 1

DRAWN BY: R. SEALEY	DATE: 3-14		
CHECKED BY: M. AVERETTE	DATE: 3-14		
DESIGN ENGINEER OF RECORD: M. AVERETTE	DATE: 3-14		

PLANS PREPARED BY:

SIMPSON ENGINEERS & ASSOCIATES

5640 Dillard Drive
Suite 200
Cary, NC 27518
(919) 852-0468
(919) 852-0598 (Fax)
www.simpsonengr.com

LICENSURE NO. C-2521

NORTH CAROLINA PROFESSIONAL SEAL 022908 ENGINEER MARK A. AVERETTE

DocuSigned by: Mark Averette
9B2C4A4A4A4A4A4A...

8/15/2014

REVISIONS								SHEET NO.
NO.	BY:	DATE:	NO.	BY:	DATE:			S-696
1			3					TOTAL SHEETS
2			4					S-707

8/15/2014 3:30:35 PM G:\Projects\2013\U-2579B\Structures\Site 18\Site 18 Drawings\Final\U-2579B_ sd_18_bt1.dgn