DocuSign Envelope ID: 5015C0A4-FAD6-4A84-B7E8-1AA386703C85

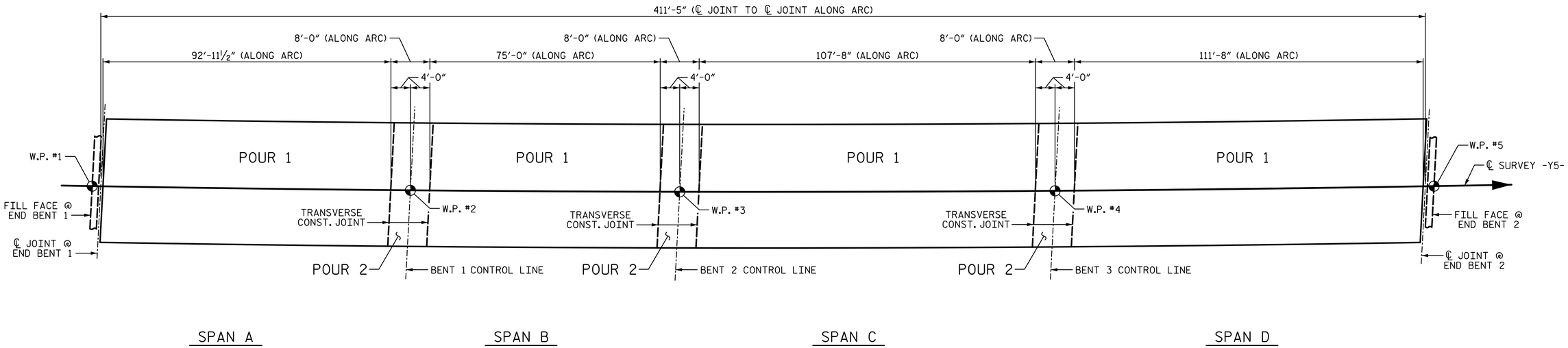

OPTIONAL POUR SEQUENCE - 4 SPAN CONTINUOUS UNIT

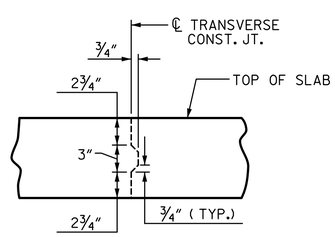

TRANSVERSE CONSTRUCTION JOINT DETAIL

NOTE: REINFORCING STEEL IN SLAB NOT SHOWN.
LONGITUDINAL REINFORCING STEEL SHALL BE
CONTINUOUS THRU JOINT.

PROJECT NO. U-2579B
FORSYTH COUNTY
STATION: 28+50.16 -Y5-

STATE OF NORTH CAROLINA
DEPARTMENT OF TRANSPORTATION
RALEIGH
SUPERSTRUCTURE

OPTIONAL POUR SEQUENCE DETAILS

PLANS PREPARED BY:
SIMPSON ENGINEERS & ASSOCIATES
5640 Dillard Drive
Suite 200
Cary, NC 27518
(919) 852-0468
(919) 852-0598 (Fax)
www.simpsonengr.com
LICENSURE NO. C-2521

NORTH CAROLINA PROFESSIONAL SEAL 023908 ENGINEER MARK A. AVERETTE
DocuSigned by: Mark Averette
8/15/2014

REVISIONS						SHEET NO.
NO.	BY:	DATE:	NO.	BY:	DATE:	S-691
1			3			TOTAL SHEETS
2			4			S-707

DRAWN BY: R. SEALEY DATE: 3-14
CHECKED BY: M. AVERETTE DATE: 3-14
DESIGN ENGINEER OF RECORD: M. AVERETTE DATE: 3-14

8/15/2014 3:30:33 PM G:\Projects\2013\U-2579B\Structures\Site 18\Site 18 Drawings\Final\U-2579B_ sd_18_pseq.dgn