DocuSign Envelope ID: 5015C0A4-FAD6-4A84-B7E8-1AA386703C85

SUPERSTRUCTURE REINFORCING STEEL LENGTHS ARE BASED ON THE FOLLOWING MINIMUM SPLICE LENGTHS

BAR SIZE	SUPERSTRUCTURE EXCEPT APPROACH SLABS, PARAPET, AND BARRIER RAIL		APPROACH SLABS		PARAPET AND BARRIER RAIL
	EPOXY COATED	UNCOATED	EPOXY COATED	UNCOATED	
#4	2′-0″	1′-9″	2′-0″	1′-9″	2′-9″
#5	2′-6″	2′-2″	2′-6″	2′-2″	3′-5″
#6	3′-0″	2′-7″	3′-10″	2′-7″	4′-4″
#7	5′-3″	3′-6″			
#8	6′-10″	4′-7″			

GROOVING BRIDGE FLOORS

APPROACH SLABS	1550	SF
BRIDGE DECK	13335	SF
TOTAL	14885	SF

BAR TYPES

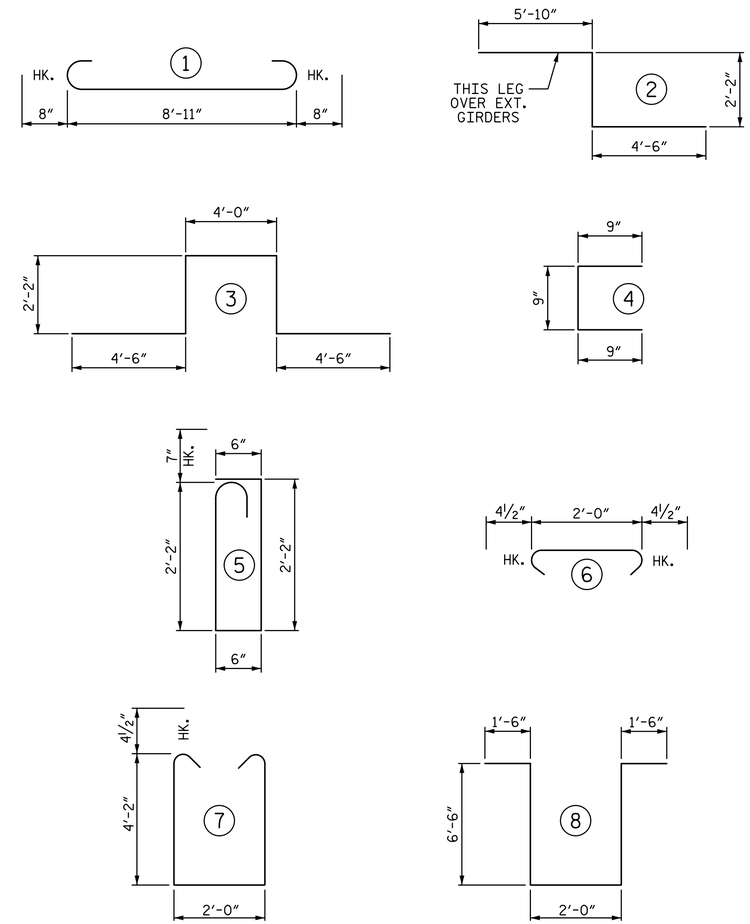

ALL BAR DIMENSIONS ARE OUT TO OUT

BILL OF MATERIAL

BAR	NO.	SIZE	TYPE	LENGTH	WEIGHT
A1E	705	5	STR	37′-9″	27758
A2	705	5	STR	37′-9″	27758
B1E	78	4	STR	23′-11″	1246
B2E	78	7	STR	25′-0″	3986
B3E	25	7	STR	27′-3″	1392
B4E	52	4	STR	17′-10″	619
B5E	78	7	STR	26′-9″	4265
B6E	25	7	STR	29′-11″	1529
B7E	52	4	STR	24′-4″	845
B8E	78	7	STR	30′-2″	4810
B9E	25	7	STR	35′-0″	1789
B10E	78	4	STR	28′-3″	1472
B11	344	5	STR	53′-4″	19135
G1E	2	5	STR	37′-7″	78
K1E	12	6	STR	6′-1″	110
K2E	12	6	1	10′-3″	185
K3E	8	8	2	12′-6″	267
K4E	8	8	3	17′-4″	370
K5	90	4	STR	8′-11″	536
K6	18	4	STR	6′-4″	76
K7	18	4	STR	5′-11″	71
S1E	42	4	4	2′-3″	63
S2E	42	5	5	5′-11″	259
S3	432	4	6	2′-9″	794
U1	18	4	7	11′-1″	133
U2	63	4	8	18′-0″	758
Z1	21	4	STR	30′-0″	421

REINFORCING STEEL	49682 LB
EPOXY COATED REINFORCING STEEL	51043 LB

CLASS "AA" CONCRETE BREAKDOWN		
POUR 1	111.3	CY
POUR 2	119.5	CY
POUR 3	160.8	CY
POUR 4	174.9	CY
TOTAL	566.5	CY

"E" INDICATES EPOXY COATED REINFORCING STEEL

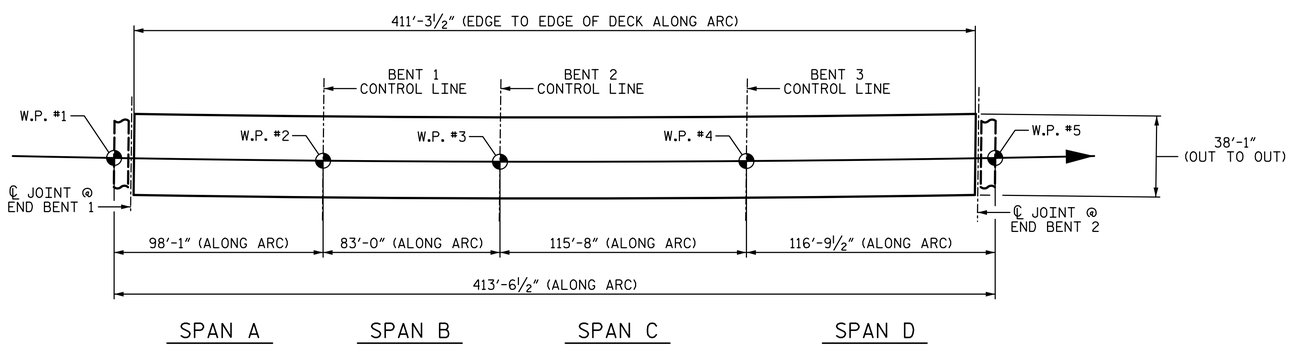

LAYOUT FOR COMPUTING AREA OF REINFORCED CONCRETE DECK SLAB

(SF = 15664)

PROJECT NO. U-2579B
FORSYTH COUNTY
STATION: 28+50.16 -Y5-

STATE OF NORTH CAROLINA
DEPARTMENT OF TRANSPORTATION
RALEIGH

SUPERSTRUCTURE

BILL OF MATERIAL

PLANS PREPARED BY:
SIMPSON ENGINEERS & ASSOCIATES
5640 Dillard Drive
Suite 200
Cary, NC 27518
(919) 852-0468
(919) 852-0598 (Fax)
www.simpsonengr.com
LICENSURE NO. C-2521

NORTH CAROLINA PROFESSIONAL SEAL 023908 ENGINEER MARK A. AVERETTE
DocuSigned by: Mark Averette
8/15/2014

REVISIONS							SHEET NO.
NO.	BY:	DATE:	NO.	BY:	DATE:		S-692
1			3				TOTAL SHEETS
2			4				S-707

DRAWN BY: R. SEALEY DATE: 3-14
CHECKED BY: M. AVERETTE DATE: 3-14
DESIGN ENGINEER OF RECORD: M. AVERETTE DATE: 3-14

8/15/2014 3:30:34 PM G:\Projects\2013\U-2579B\Structures\Site 18\Site 18 Drawings\Final\U-2579B_ sd_18_bm.dgn