DocuSign Envelope ID: 5015C0A4-FAD6-4A84-B7E8-1AA386703C85

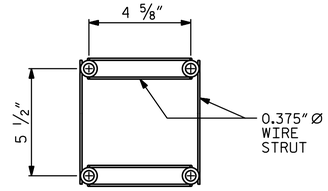

PLAN

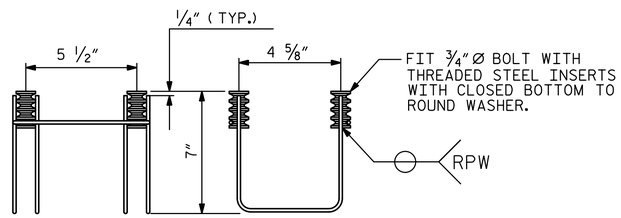

SIDE VIEW ELEVATION

4-BOLT METAL RAIL ANCHOR ASSEMBLY

(148 ASSEMBLIES REQUIRED)

NOTES:

STRUCTURAL CONCRETE ANCHOR ASSEMBLY

THE STRUCTURAL CONCRETE ANCHOR ASSEMBLY SHALL CONSIST OF THE FOLLOWING COMPONENTS :

A. FERRULES SHALL BE MADE FROM STEEL MEETING THE REQUIREMENTS OF AASHTO M169, GRADE 12L14 AND SHALL HAVE A MINIMUM LENGTH OF THREADS OF 2" FOR 3/4" FERRULES.

B. 4 - 3/4" Ø X 2 1/2" BOLTS WITH WASHERS. BOLTS SHALL CONFORM TO THE REQUIREMENTS OF ASTM A307. BOLTS AND WASHERS SHALL BE GALVANIZED. AT THE CONTRACTOR'S OPTION, STAINLESS STEEL BOLTS AND WASHERS MAY BE USED AS AN ALTERNATE FOR THE 3/4" Ø X 2 1/2" GALVANIZED BOLTS AND WASHERS. THEY SHALL CONFORM TO OR EXCEED THE MECHANICAL REQUIREMENTS OF ASTM A307. THE USE OF THIS ALTERNATE SHALL BE APPROVED BY THE ENGINEER.

C. WIRE STRUT SHOWN IN THE CONCRETE ANCHOR ASSEMBLY DETAIL IS THE MINIMUM ALLOWABLE SIZE AND SHALL HAVE A MINIMUM TENSILE STRENGTH OF 100,000 PSI. AS AN OPTION, A 7/16" Ø WIRE STRUT WITH A MINIMUM TENSILE STRENGTH OF 90,000 PSI IS ACCEPTABLE.

D. THE METAL RAIL ANCHOR ASSEMBLIES TO BE HOT DIPPED GALVANIZED TO CONFORM TO REQUIREMENTS OF AASHTO M111.

E. THE COST OF THE METAL RAIL ANCHOR ASSEMBLY WITH BOLTS AND WASHERS COMPLETE IN PLACE SHALL BE INCLUDED IN THE PRICE BID FOR LINEAR FEET OF METAL RAIL.

F. BOLTS TO BE TIGHTENED ONE-HALF TURN WITH A WRENCH FROM A FINGER-TIGHT POSITION.

THE CONTRACTOR MAY USE ADHESIVELY ANCHORED ANCHOR BOLTS IN PLACE OF THE METAL RAIL ANCHOR ASSEMBLY. LEVEL ONE FIELD TESTING IS REQUIRED, AND THE YIELD LOAD OF THE 3/4" Ø BOLT IS 10 KIPS. FOR ADHESIVELY ANCHORED ANCHOR BOLTS OR DOWELS, SEE THE STANDARD SPECIFICATIONS.

WHEN ADHESIVELY ANCHORED ANCHOR BOLTS ARE USED, BOLTS SHALL MEET THE REQUIREMENTS OF ASTM F593 ALLOY 304 STAINLESS STEEL WITH MINIMUM 75,000 PSI ULTIMATE STRENGTH. NUTS SHALL MEET THE REQUIREMENTS OF ASTM F594 ALLOY 304 STAINLESS STEEL AND WASHERS SHALL MEET THE REQUIREMENTS OF ASTM F844 EXCEPT THEY SHALL BE MADE FROM ALLOY 304 STAINLESS STEEL.

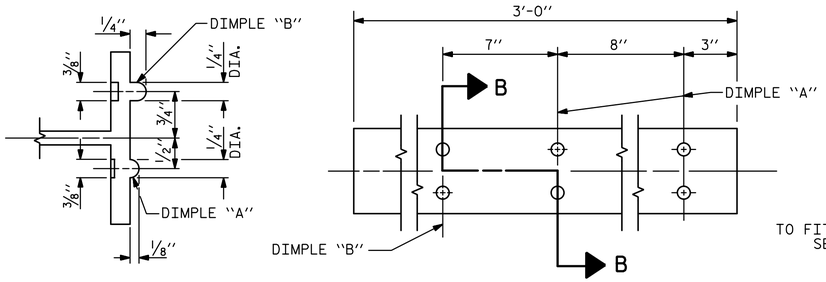

SECTION B-B

EXPANSION BAR DETAILS

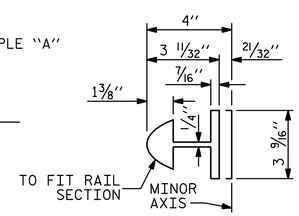

BAR SECTION

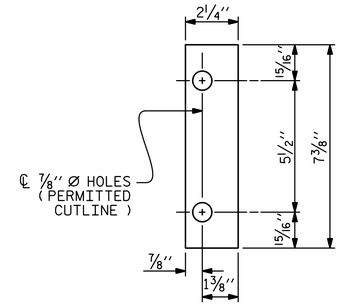

FRONT PLATE

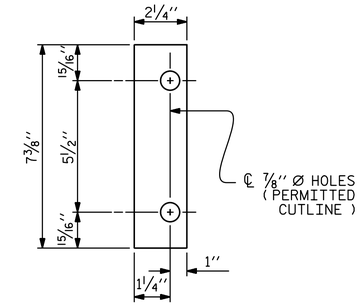

REAR PLATE

SHIM DETAILS

NOTE: SHIMS MAY BE CUT ALONG PERMITTED CUTLINE OR SLOTTED TO EDGE OF PLATE TO FACILITATE PLACEMENT.

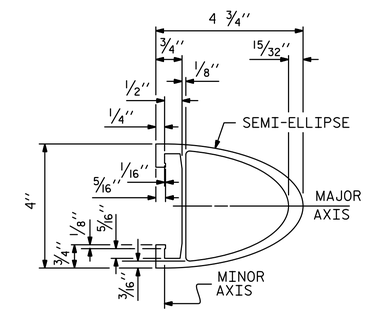

RAIL SECTION

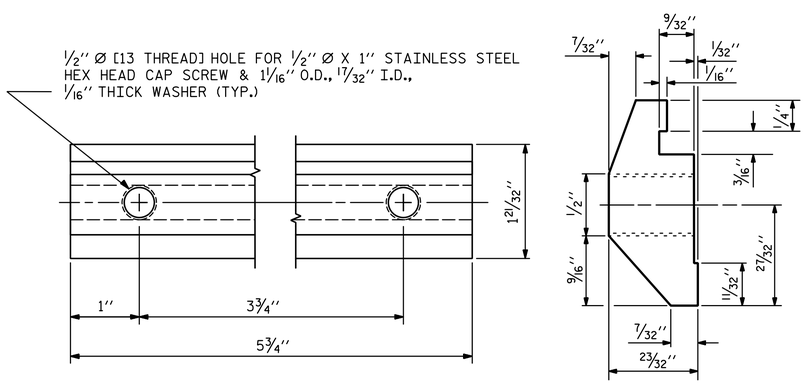

CLAMP BAR DETAIL

(4 REQUIRED PER POST)

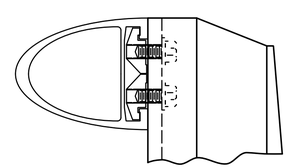

CLAMP ASSEMBLY

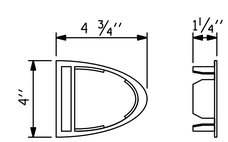

RAIL CAP

PROJECT NO. U-2579B

FORSYTH COUNTY

STATION: 28+50.16 -Y5-

SHEET 2 OF 2

STATE OF NORTH CAROLINA
DEPARTMENT OF TRANSPORTATION
RALEIGH

SUPERSTRUCTURE

2 BAR METAL RAIL

PLANS PREPARED BY:

SIMPSON ENGINEERS & ASSOCIATES

5640 Dillard Drive
Suite 200
Cary, NC 27518
(919) 852-0468
(919) 852-0598 (Fax)
www.simpsonengr.com

LICENSURE NO. C-2521

NORTH CAROLINA PROFESSIONAL SEAL 025908 ENGINEER MARK A. AVERETTE

DocuSigned by: Mark Averette

8/15/2014

REVISIONS								SHEET NO.
NO.	BY:	DATE:	NO.	BY:	DATE:			S-688
1			3					TOTAL SHEETS
2			4					S-707

DRAWN BY:	R. SEALEY	DATE:	3-14
CHECKED BY:	M. AVERETTE	DATE:	3-14
DESIGN ENGINEER OF RECORD:	M. AVERETTE	DATE:	3-14

8/15/2014 3:30:32 PM G:\Projects\2013\U-2579B\Structures\Site 18\Site 18 Drawings\Final\U-2579B_ sd_18_2mr.dgn