DocuSign Envelope ID: 5015C0A4-FAD6-4A84-B7E8-1AA386703C85

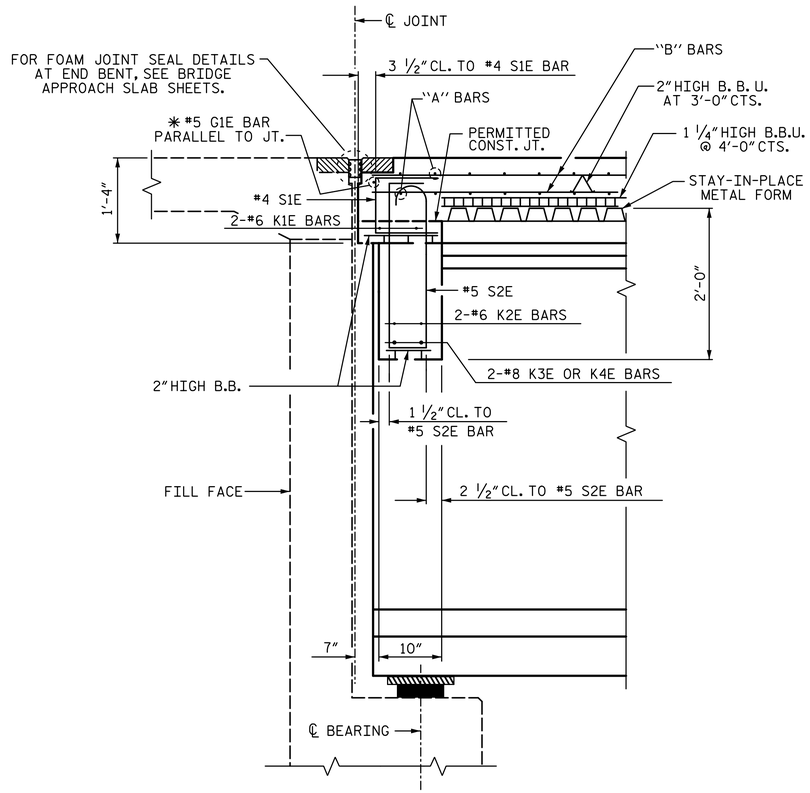

SECTION THRU DIAPHRAGM @ END BENTS

✱ #5 G1E BAR MAY BE SHIFTED SLIGHTLY, AS NECESSARY, TO CLEAR REINFORCING STEEL AND STIRRUPS

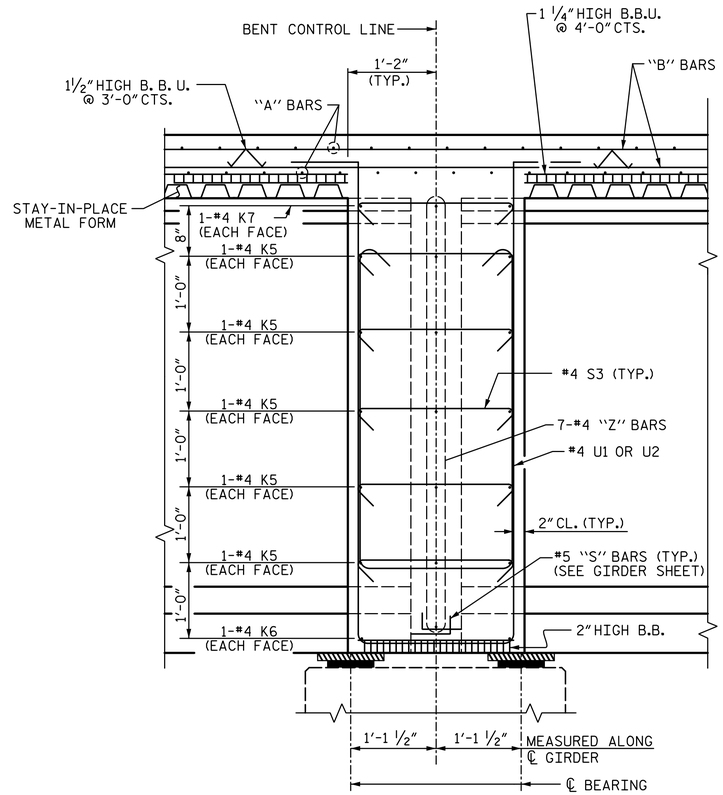

SECTION THRU CONTINUOUS BENT DIAPHRAGM

PROJECT NO. U-2579B

FORSYTH COUNTY

STATION: 28+50.16 -Y5-

SHEET 1 OF 2

STATE OF NORTH CAROLINA
DEPARTMENT OF TRANSPORTATION
RALEIGH
SUPERSTRUCTURE

TYPICAL SECTION DETAILS

PLANS PREPARED BY:

SIMPSON ENGINEERS & ASSOCIATES
5640 Dillard Drive
Suite 200
Cary, NC 27518
(919) 852-0468
(919) 852-0598 (Fax)
www.simpsonengr.com
LICENSURE NO. C-2521

NORTH CAROLINA PROFESSIONAL SEAL 023908 ENGINEER MARK A. AVERETTE
DocuSigned by: Mark A. Averette
8/15/2014

REVISIONS						
NO.	BY:	DATE:	NO.	BY:	DATE:	SHEET NO. S-666
1			3			TOTAL SHEETS S-707
2			4			

DRAWN BY: R. SEALEY DATE: 3-14
CHECKED BY: M. AVERETTE DATE: 3-14
DESIGN ENGINEER OF RECORD: M. AVERETTE DATE: 3-14

8/15/2014 3:30:25 PM G:\Projects\2013\U-2579B\Structures\Site 18\Site 18 Drawings\Final\U-2579B_ sd_18_ts.dgn