DocuSign Envelope ID: 1818FB5B-B49A-4408-B1F1-58B42B1D31FD

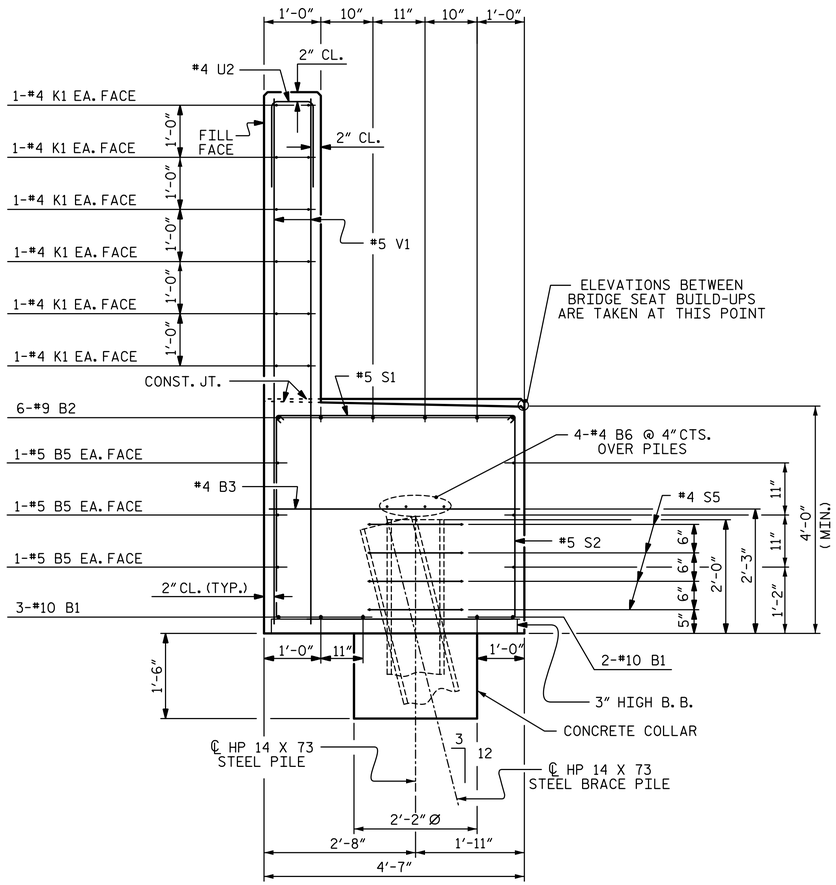

SECTION A-A

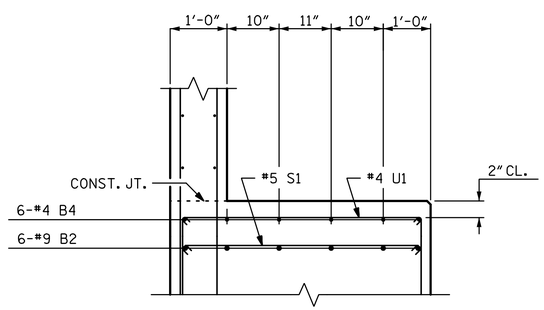

SECTION B-B

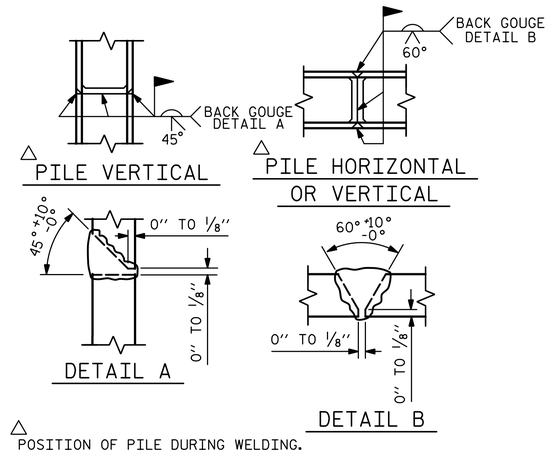

△ POSITION OF PILE DURING WELDING.

PILE SPLICE DETAILS

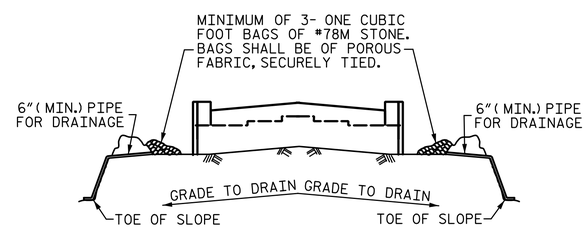

BAGGED STONE AND PIPE SHALL BE PLACED IMMEDIATELY AFTER COMPLETION OF END BENT EXCAVATION. PIPE MAY BE EITHER CONCRETE, CORRUGATED STEEL, CORRUGATED ALUMINUM ALLOY, OR CORRUGATED PLASTIC. PERFORATED PIPE WILL NOT BE ALLOWED.

BAGGED STONE SHALL REMAIN IN PLACE UNTIL THE ENGINEER DIRECTS THAT IT BE REMOVED. THE CONTRACTOR SHALL REMOVE AND DISPOSE OF SILT ACCUMULATIONS AT BAGGED STONE WHEN SO DIRECTED BY THE ENGINEER. BAGS SHALL BE REMOVED AND REPLACED WHENEVER THE ENGINEER DETERMINES THAT THEY HAVE DETERIORATED AND LOST THEIR EFFECTIVENESS.

NO SEPARATE PAYMENT WILL BE MADE FOR THIS WORK AND THE ENTIRE COST OF THIS WORK SHALL BE INCLUDED IN THE UNIT CONTRACT PRICE BID FOR THE SEVERAL PAY ITEMS.

TEMPORARY DRAINAGE AT END BENT

BAR TYPES

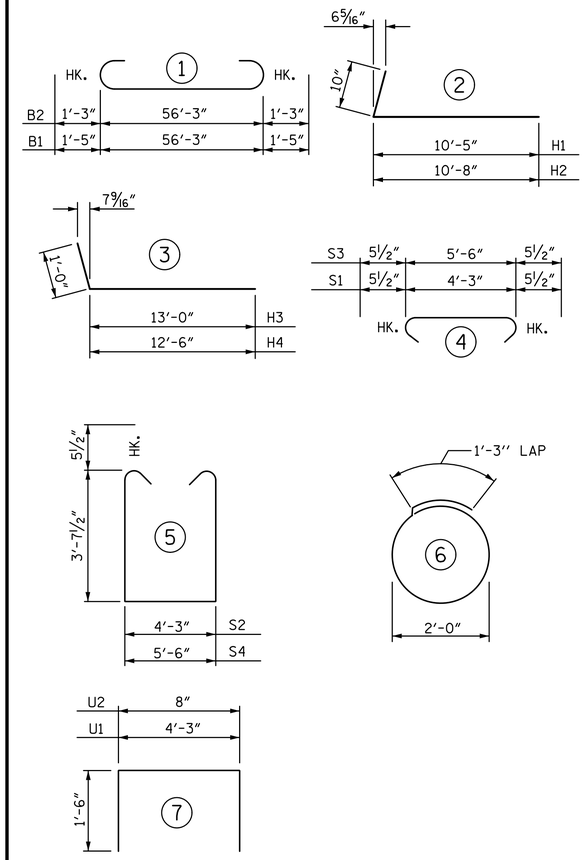

ALL BAR DIMENSIONS ARE OUT TO OUT

BILL OF MATERIAL

END BENT 1

BAR	NO.	SIZE	TYPE	LENGTH	WEIGHT
B1	5	10	1	59'-1"	1271
B2	6	9	1	58'-9"	1199
B3	14	4	STR	4'-3"	40
B4	12	4	STR	3'-2"	25
B5	6	5	STR	56'-6"	354
B6	8	4	STR	29'-8"	159
H1	23	5	2	11'-3"	270
H2	23	5	2	11'-6"	276
H3	23	6	3	14'-0"	484
H4	23	6	3	13'-6"	466
K1	24	4	STR	29'-8"	476
K2	8	4	STR	4'-2"	22
S1	84	5	4	5'-2"	453
S2	84	5	5	12'-5"	1088
S3	2	5	4	6'-5"	13
S4	2	5	5	13'-8"	29
S5	28	4	6	7'-6"	140
U1	8	4	7	7'-3"	39
U2	48	4	7	3'-8"	118
V1	96	5	STR	9'-7"	960
V2	32	5	STR	11'-5"	381
V3	37	5	STR	11'-4"	437

TOTAL REINFORCING STEEL 8700 LB

CLASS "A" CONCRETE BREAKDOWN
POUR 1
(CAP, COLLARS, & LOWER WINGS) 45.2 CY
POUR 2
(BACKWALL & UPPER WINGS) 19.5 CY
TOTAL CLASS "A" CONCRETE 64.7 CY

HP 14 X73 STEEL PILES
NO. 7 160 LF

STEEL PILE POINTS NO. 7

PROJECT NO. U-2579B
FORSYTH COUNTY
STATION: 23+59.12 -Y5-

SHEET 3 OF 3

STATE OF NORTH CAROLINA
DEPARTMENT OF TRANSPORTATION
RALEIGH
SUBSTRUCTURE

END BENT 1

DRAWN BY: S. D. COOPER DATE: 3-14
CHECKED BY: T. J. BEACH DATE: 3-14
DESIGN ENGINEER OF RECORD: M. AVERETTE DATE: 3-14

PLANS PREPARED BY:
SIMPSON ENGINEERS & ASSOCIATES
5640 Dillard Drive
Suite 200
Cary, NC 27518
(919) 852-0468
(919) 852-0598 (Fax)
www.simpsonengr.com
LICENSURE NO. C-2521

NORTH CAROLINA PROFESSIONAL SEAL 022908 ENGINEER MARK A. AVERETTE
DocuSigned by: Mark Averette
8/15/2014

REVISIONS								SHEET NO.
NO.	BY:	DATE:	NO.	BY:	DATE:			S-651
1			3					TOTAL SHEETS
2			4					S-707

8/15/2014 3:10:41 PM G:\Projects\2013\U-2579B\Structures\Site 17\Site 17 Drawings\Final\U-2579B_sd_site 17_ebl.dgn