DocuSign Envelope ID: 1818FB5B-B49A-4408-B1F1-58B42B1D31FD

NOTES:

"A" BARS TO BE PLACED PERPENDICULAR TO AND SPACED ALONG CHORD.

FOR CONCRETE PARAPET REINFORCING STEEL AND DETAILS SEE "CONCRETE PARAPET DETAILS" SHEETS.

OUTSIDE EDGES OF DECK ARE TO BE CONSTRUCTED PARALLEL TO CHORD.

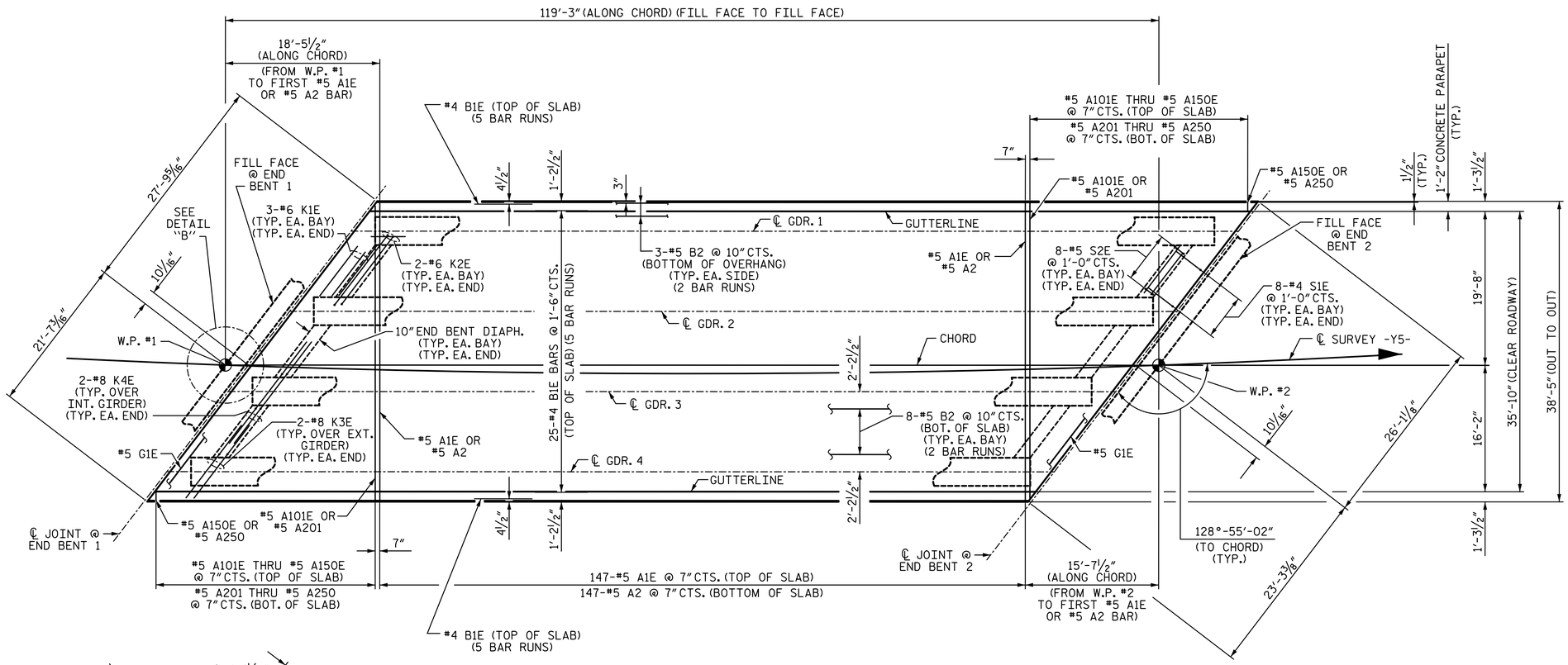

PLAN OF SPAN A

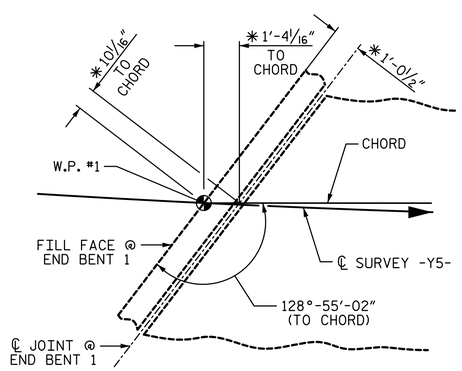

DETAIL "B"

(END BENT 1 SHOWN, END BENT 2 SIMILAR BY ROTATION)

* @ 60°F (FOR END BENT 1)

PROJECT NO. U-2579B

FORSYTH COUNTY

STATION: 23+59.12 -Y5-

STATE OF NORTH CAROLINA
DEPARTMENT OF TRANSPORTATION
RALEIGH

SUPERSTRUCTURE

PLAN OF SPAN

PLANS PREPARED BY:

SIMPSON ENGINEERS & ASSOCIATES
5640 Dillard Drive
Suite 200
Cary, NC 27518
(919) 852-0468
(919) 852-0598 (Fax)
www.simpsonengr.com
LICENSURE NO. C-2521

NORTH CAROLINA PROFESSIONAL SEAL 027908 ENGINEER MARK A. AVERETTE
Mark A. Averette
Digitally signed by:
8/15/2014

REVISIONS							SHEET NO.
NO.	BY:	DATE:	NO.	BY:	DATE:		S-635
1			3				TOTAL SHEETS
2			4				S-707

DRAWN BY:	S. D. COOPER	DATE:	3-14
CHECKED BY:	T. J. BEACH	DATE:	3-14
DESIGN ENGINEER OF RECORD:	M. AVERETTE	DATE:	3-14

8/15/2014 3:10:34 PM G:\Projects\2013\U-2579B\Structures\Site 17\Site 17 Drawings\Final\U-2579B_sd_site 17_ps.dgn