DocuSign Envelope ID: 1818FB5B-B49A-4408-B1F1-58B42B1D31FD

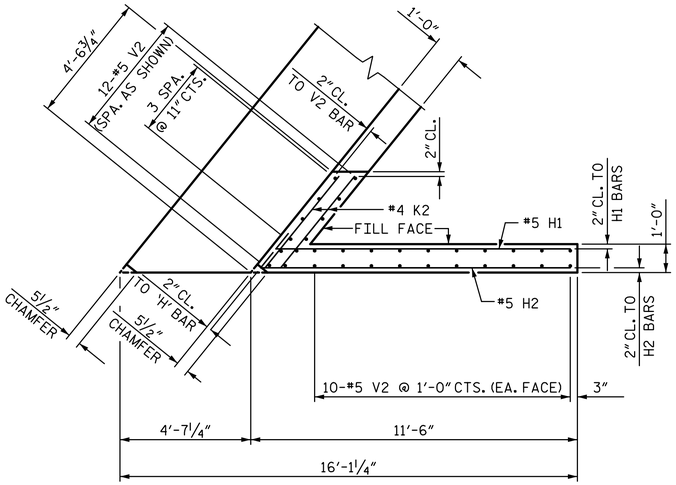

PLAN OF WING (W1)

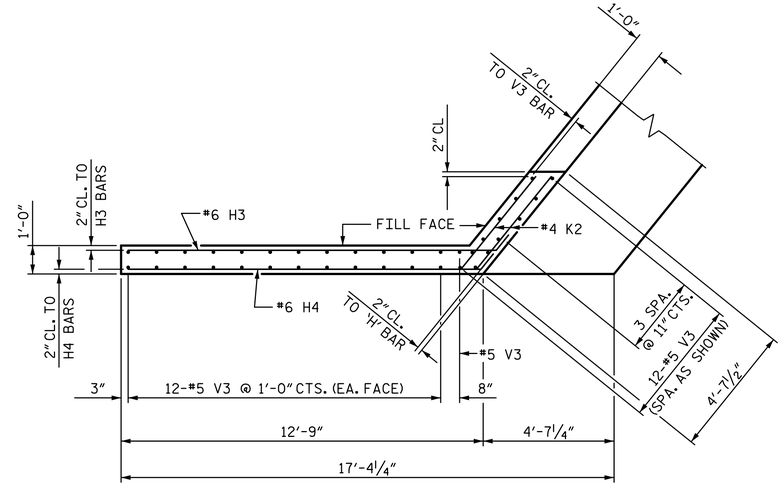

PLAN OF WING (W2)

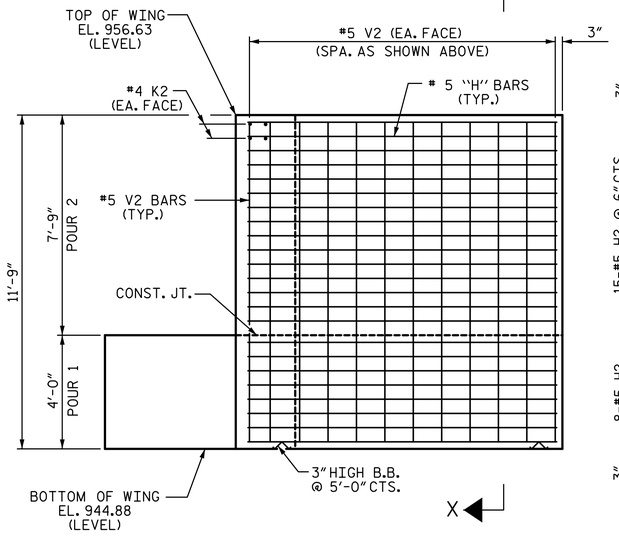

ELEVATION OF WING (W1)

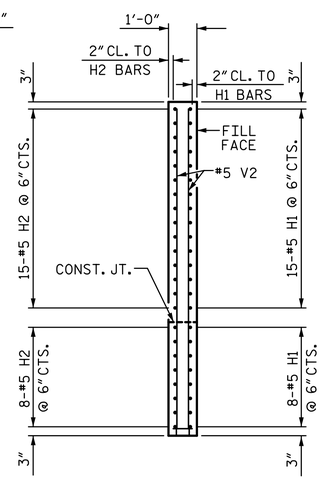

SECTION X-X

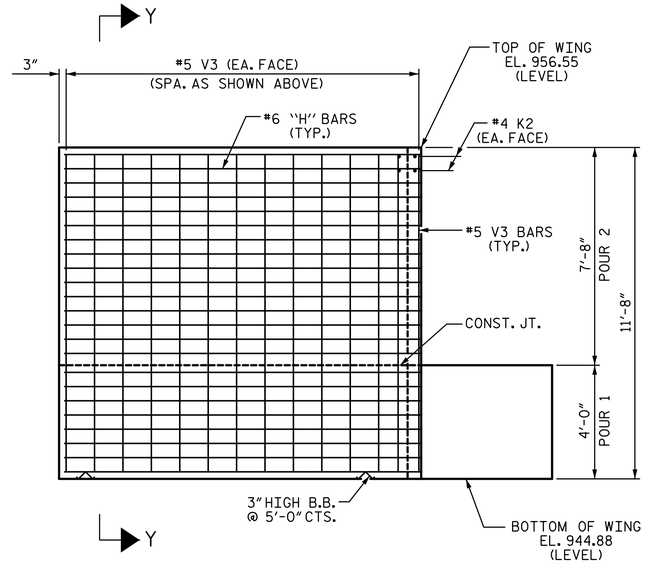

ELEVATION OF WING (W2)

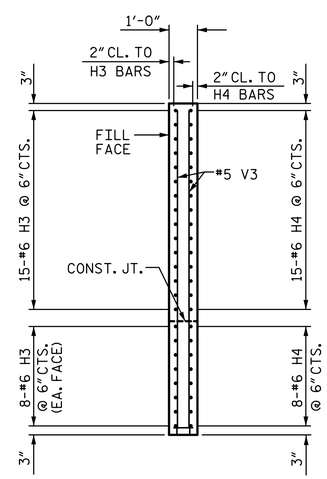

SECTION Y-Y

PROJECT NO. U-2579B
FORSYTH COUNTY
STATION: 23+59.12 -Y5-

SHEET 2 OF 3

STATE OF NORTH CAROLINA
DEPARTMENT OF TRANSPORTATION
RALEIGH
SUBSTRUCTURE

END BENT 1

PLANS PREPARED BY:

SIMPSON ENGINEERS & ASSOCIATES
5640 Dillard Drive
Suite 200
Cary, NC 27518
(919) 852-0468
(919) 852-0598 (Fax)
www.simpsonengr.com
LICENSURE NO. C-2521

NORTH CAROLINA PROFESSIONAL SEAL 025908 ENGINEER MARK A. AVERETTE
Docusigned by: Mark Averette
8/15/2014

REVISIONS								SHEET NO.
NO.	BY:	DATE:	NO.	BY:	DATE:			S-650
1			3					TOTAL SHEETS
2			4					S-707

DRAWN BY: S. D. COOPER DATE: 3-14
CHECKED BY: T. J. BEACH DATE: 3-14
DESIGN ENGINEER OF RECORD: M. AVERETTE DATE: 3-14

8/15/2014 3:10:41 PM G:\Projects\2013\U-2579B\Structures\Site 17\Site 17 Drawings\Final\U-2579B_sd_site 17_ebl.dgn