DocuSign Envelope ID: 1818FB5B-B49A-4408-B1F1-58B42B1D31FD

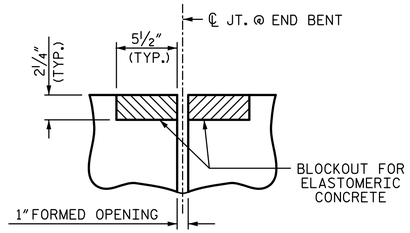

SECTION C-C

FOAM JOINT SEAL (PRE-SAWED ELASTOMERIC CONCRETE DIMENSIONS)

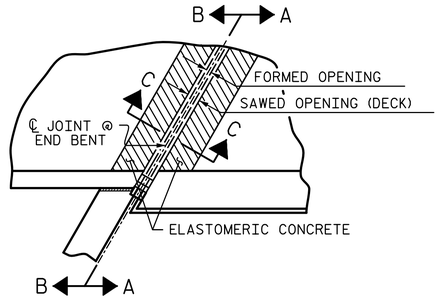

PLAN

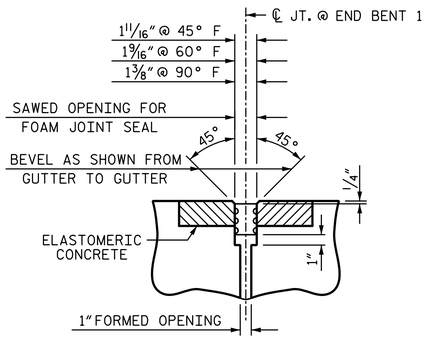

SECTION C-C

FOAM JOINT SEAL (EXPANSION) (END BENT 1)

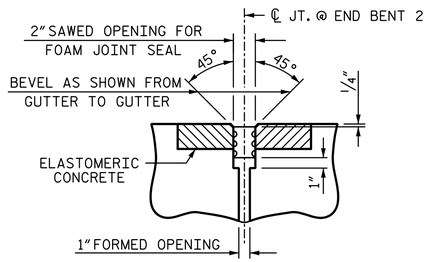

SECTION C-C

FOAM JOINT SEAL (FIXED) (END BENT 2)

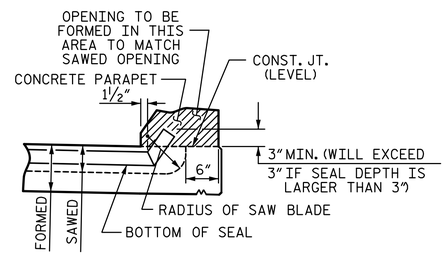

SECTION A-A

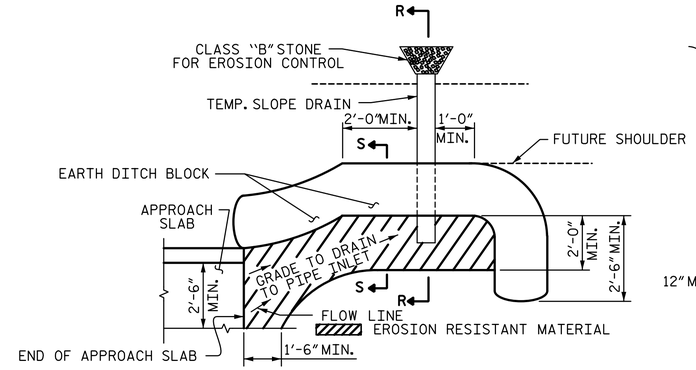

NOTE: IMMEDIATELY AFTER THE CONSTRUCTION OF THE APPROACH SLAB, THE CONTRACTOR SHALL PROVIDE TEMPORARY BERM AND SLOPE DRAIN. CONTRACTOR SHALL GRADE TO PIPE INLET AND PROVIDE EROSION RESISTANT MATERIAL AS SHOWN. THE EROSION RESISTANT MATERIAL SHALL BE EITHER 1) ASPHALT PLANT MIX, TYPE 1 OR TYPE 2, MIN. 2" DEPTH, 2) EROSION CONTROL MAT, OR 3) CONCRETE, AS DIRECTED BY THE ENGINEER. THE SLOPE DRAIN SHALL CONSIST OF A NON-PERFORATED TEMPORARY DRAINAGE PIPE, 12 INCHES IN DIAMETER.

PLAN VIEW

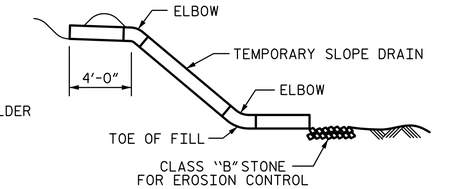

SECTION R-R

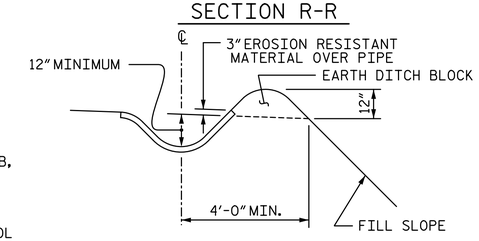

SECTION S-S

TEMPORARY BERM AND SLOPE DRAIN DETAILS

(TO BE USED WHEN SHOULDER BERM GUTTER IS REQUIRED)

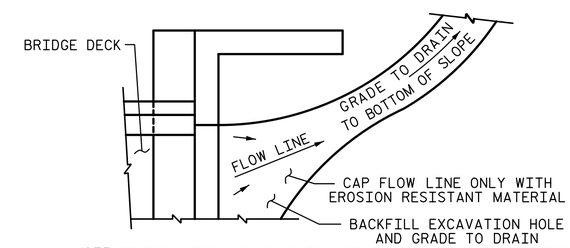

NOTE: IF THE APPROACH SLAB IS NOT CONSTRUCTED IMMEDIATELY AFTER THE BACKFILLING OF THE END BENT EXCAVATION, GRADE TO DRAIN TO THE BOTTOM OF THE SLOPE AND PROVIDE EROSION RESISTANT MATERIAL, SUCH AS FIBERGLASS ROVING OR AS DIRECTED BY THE ENGINEER TO PREVENT SOIL EROSION AND TO PROTECT THE AREA ADJACENT TO THE STRUCTURE. THE CONTRACTOR WILL BE REQUIRED TO REMOVE THESE MATERIALS PRIOR TO CONSTRUCTION OF THE APPROACH SLAB.

TEMPORARY DRAINAGE DETAIL

ELASTOMERIC CONCRETE	
END BENT NO.	ELASTOMERIC CONCRETE * (CU. FT.)
1	7.9
2	7.9
TOTAL	15.8

* BASED ON THE MINIMUM BLOCKOUT SHOWN.

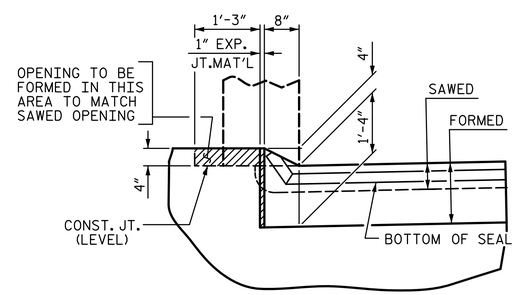

SECTION B-B

JOINT SEAL DETAILS @ END BENT

FOAM JOINT SEAL TO BE CUT, HEAT WELDED AND TURNED UP. THE JOINT SHALL BE SAWED PRIOR TO THE CASTING OF THE CONCRETE PARAPET.

PROJECT NO. U-2579B

FORSYTH COUNTY

STATION: 23+59.12 -Y5-

SHEET 2 OF 2

STATE OF NORTH CAROLINA
DEPARTMENT OF TRANSPORTATION
RALEIGH

BRIDGE APPROACH SLAB DETAILS

PLANS PREPARED BY:
SIMPSON ENGINEERS & ASSOCIATES
5640 Dillard Drive
Suite 200
Cary, NC 27518
(919) 852-0468
(919) 852-0598 (Fax)
www.simpsonengr.com
LICENSURE NO. C-2521

NORTH CAROLINA PROFESSIONAL SEAL 024908 ENGINEER MARK A. AVERETTE
DocuSigned by: Mark Averette
8/15/2014

REVISIONS						
NO.	BY:	DATE:	NO.	BY:	DATE:	
1			3			
2			4			

SHEET NO. S-657

TOTAL SHEETS S-707

DRAWN BY:	S. D. COOPER	DATE:	3-14
CHECKED BY:	T. J. BEACH	DATE:	3-14
DESIGN ENGINEER OF RECORD:	M. AVERETTE	DATE:	3-14

8/15/2014 3:10:44 PM G:\Projects\2013\U-2579B\Structures\Site 17\Site 17 Drawings\Final\U-2579B_sd_site 17_as.dgn