DocuSign Envelope ID: 1818FB5B-B49A-4408-B1F1-58B42B1D31FD

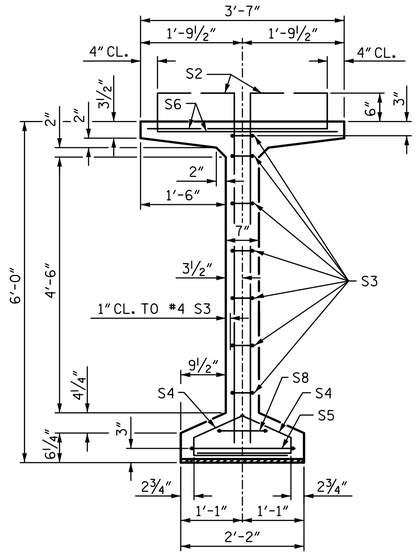

SECTION A-A

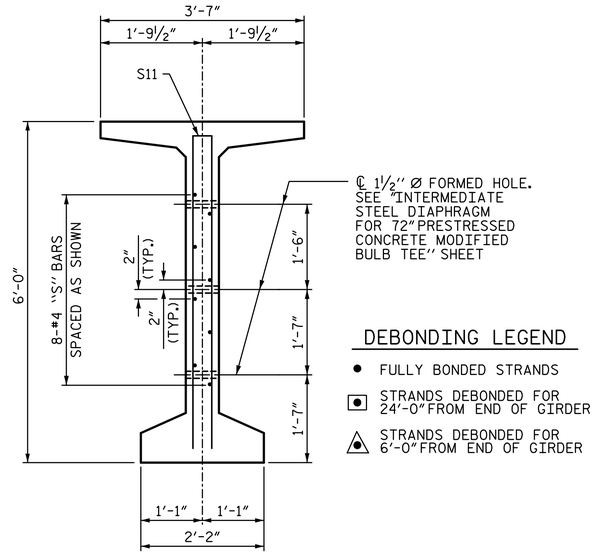

SECTION B-B

(S1,S6 AND S9 BARS NOT SHOWN)

DEBONDING LEGEND

- ● FULLY BONDED STRANDS
- ▣ STRANDS DEBONDED FOR 24'-0" FROM END OF GIRDER
- ◬ STRANDS DEBONDED FOR 6'-0" FROM END OF GIRDER

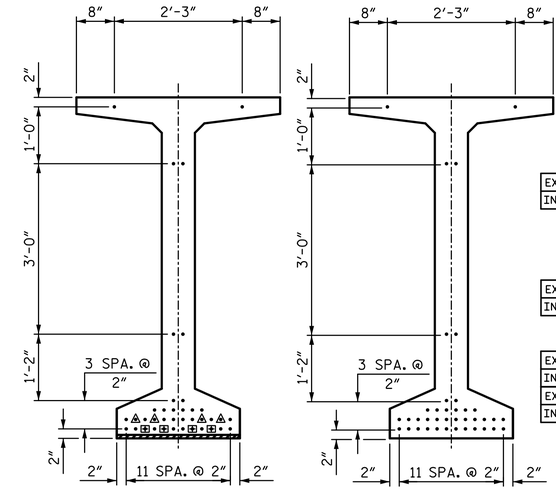

0.6" Ø LOW RELAXATION STRAND LAYOUT

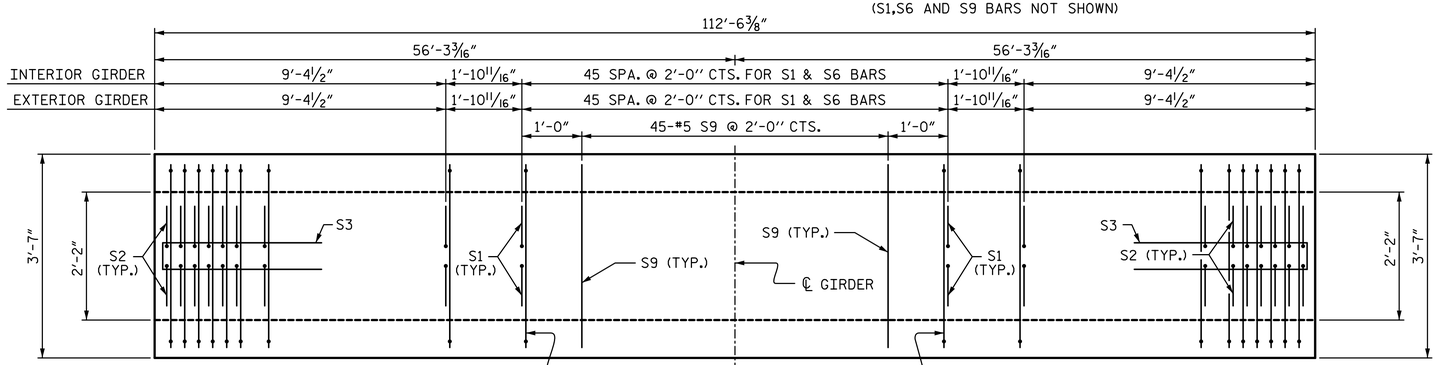

PLAN OF GIRDER

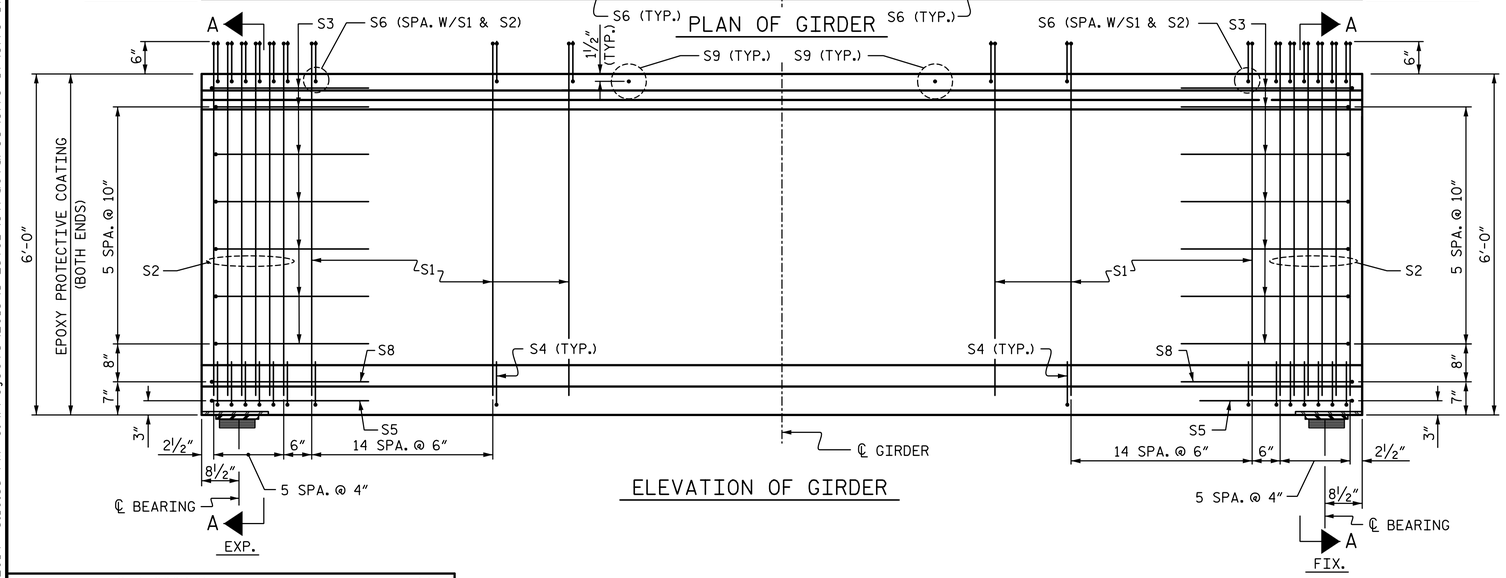

ELEVATION OF GIRDER

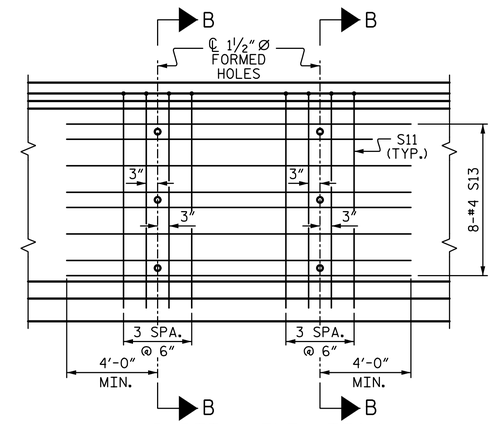

PARTIAL ELEVATION

(SHOWING INTERMEDIATE STEEL DIAPHRAGM REINFORCING STEEL FOR INTERIOR GIRDERS)

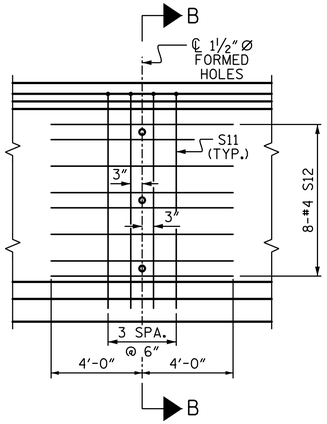

PARTIAL ELEVATION

(SHOWING INTERMEDIATE STEEL DIAPHRAGM REINFORCING STEEL FOR EXTERIOR GIRDERS)

0.6" Ø L. R. GRADE 270 STRANDS

AREA (SQUARE INCHES)	ULTIMATE STRENGTH (LBS. PER STRAND)	APPLIED PRESTRESS (LBS. PER STRAND)
0.217	58,600	43,950

REINFORCING STEEL FOR ONE GDR

	BAR	NUMBER	SIZE	TYPE	LENGTH	WEIGHT
EXTERIOR GDR.	S1	152	#5	1	6'-10"	1083
INTERIOR GDR.	S1	152	#5	1	6'-10"	1083
	S2	24	#6	1	6'-10"	246
	S3	14	#4	2	8'-5"	79
	S4	84	#4	3	3'-0"	168
	S5	2	#5	2	9'-10"	21
EXTERIOR GDR.	S6	176	#5	4	4'-4"	795
INTERIOR GDR.	S6	176	#5	4	4'-4"	795
	S8	2	#5	2	9'-0"	19
	S9	45	#5	STR	3'-3"	153
EXTERIOR GDR.	S11	8	#5	2	11'-8"	97
INTERIOR GDR.	S11	16	#5	2	11'-8"	195
EXTERIOR GDR.	S12	16	#4	STR	8'-0"	86
INTERIOR GDR.	S13	16	#4	STR	16'-4"	175

BAR TYPES

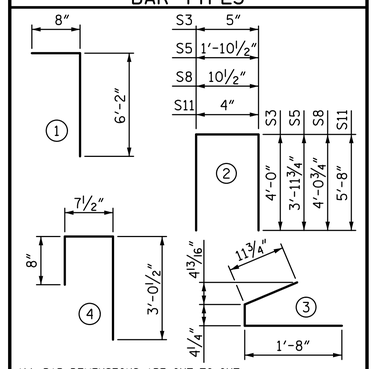

ALL BAR DIMENSIONS ARE OUT-TO-OUT

QUANTITIES FOR ONE GIRDER

	REINFORCING STEEL LB.	7,500 PSI CONCRETE C.Y.	0.6" Ø L.R. STRANDS No.
EXTERIOR GIRDER	2747	24.1	38
INTERIOR GIRDER	2934	24.1	38

GIRDERS REQUIRED

NUMBER	LENGTH	TOTAL LENGTH
4	112'-6⅜"	450'-1½"

PROJECT NO. U-2579B

FORSYTH COUNTY

STATION: 23+59.12 -Y5-

PLANS PREPARED BY:
SIMPSON ENGINEERS & ASSOCIATES
5640 Dillard Drive
Suite 200
Cary, NC 27518
(919) 852-0468
(919) 852-0598 (Fax)
www.simpsonengr.com
LICENSURE NO. C-2521

NORTH CAROLINA PROFESSIONAL SEAL 023908 ENGINEER MARK A. AVERETTE

DocuSigned by: Mark Averette 1B2F2B2B2B2B2B2...

8/15/2014

STATE OF NORTH CAROLINA
DEPARTMENT OF TRANSPORTATION
RALEIGH

SUPERSTRUCTURE

72" PRESTRESSED CONCRETE MODIFIED BULB TEE

REVISIONS							SHEET NO.
NO.	BY:	DATE:	NO.	BY:	DATE:		S-637
1			3				TOTAL SHEETS
2			4				S-707

DRAWN BY:	S. D. COOPER	DATE:	3-14
CHECKED BY:	T. J. BEACH	DATE:	3-14
DESIGN ENGINEER OF RECORD:	M. AVERETTE	DATE:	3-14

8/15/2014 3:10:35 PM G:\Projects\2013\U-2579B\Structures\Site 17\Site 17 Drawings\Final\U-2579B_sd_site 17_pcg.dgn