DocuSign Envelope ID: 1818FB5B-B49A-4408-B1F1-58B42B1D31FD

NOTES:

PROVIDE 1¼″ HIGH BEAM BOLSTERS UPPER AT 4′-0″ CTS. ATOP THE STAY-IN-PLACE METAL FORMS TO SUPPORT THE BOTTOM MAT OF ″A″ BARS. WHEN USING REMOVABLE FORMS, PROVIDE CONTINUOUS HIGH CHAIRS FOR METAL DECK (C.H.C.M.) @ 4′-0″ CTS. WITH A HEIGHT TO SUPPORT THE BOTTOM MAT OF ″A″ BARS A CLEAR DISTANCE OF 2½″ ABOVE THE TOP OF THE REMOVABLE FORM.

CONCRETE PARAPET SHALL NOT BE CAST UNTIL ALL SLAB CONCRETE HAS BEEN CAST AND HAS REACHED A MINIMUM COMPRESSIVE STRENGTH OF 3,000 PSI.

DIRECTION OF CASTING DECK CONCRETE SHALL BE FROM FIXED BEARING END TOWARDS THE EXPANSION BEARING END OF THE SPAN.

LONGITUDINAL STEEL MAY BE SHIFTED SLIGHTLY, AS NECESSARY, TO AVOID INTERFERENCE WITH STIRRUPS IN PRESTRESSED CONCRETE GIRDERS.

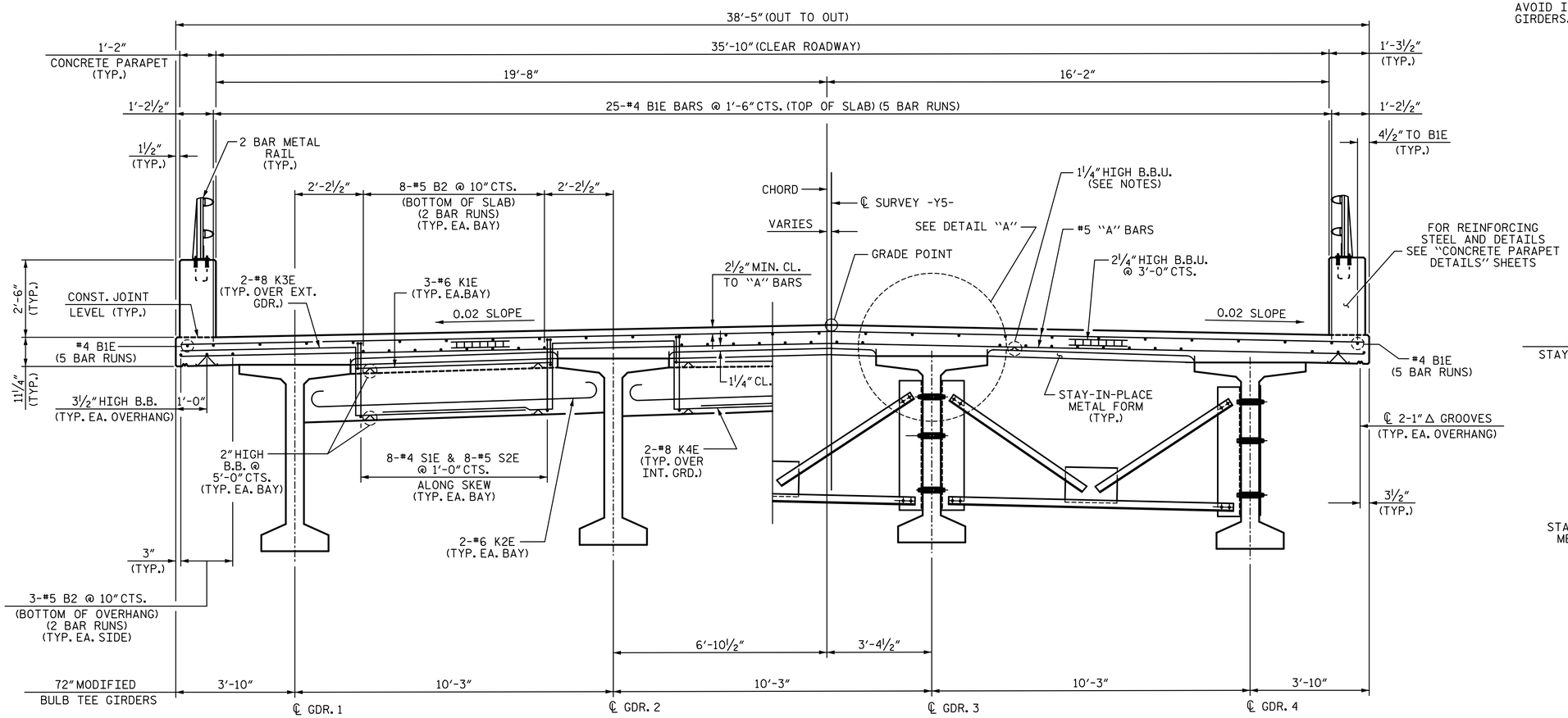

END BENT DIAPHRAGMS

INTERMEDIATE DIAPHRAGMS

TYPICAL SECTION

(DIAPHRAGM REINFORCING TYPICAL EACH BAY)

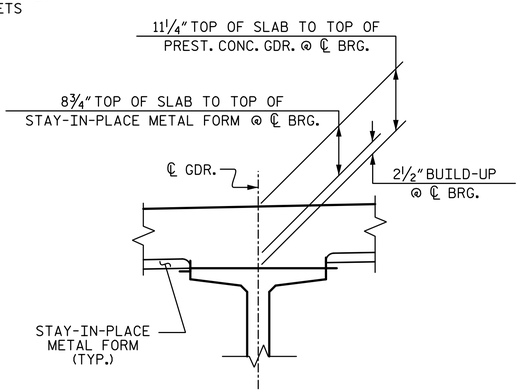

DETAIL ″A″

PROJECT NO. U-2579B

FORSYTH COUNTY

STATION: 23+59.12 -Y5-

SHEET 1 OF 2

STATE OF NORTH CAROLINA
DEPARTMENT OF TRANSPORTATION
RALEIGH

SUPERSTRUCTURE

TYPICAL SECTION

REVISIONS							SHEET NO.
NO.	BY:	DATE:	NO.	BY:	DATE:		S-633
1			3				TOTAL SHEETS
2			4				S-707

PLANS PREPARED BY:

SIMPSON ENGINEERS & ASSOCIATES
5640 Dillard Drive
Suite 200
Cary, NC 27518
(919) 852-0468
(919) 852-0598 (Fax)
www.simpsonengr.com
LICENSURE NO. C-2521

NORTH CAROLINA PROFESSIONAL SEAL 023908 ENGINEER MARK A. AVERETTE
DocuSigned by: Mark Averette 9B2B...
8/15/2014

DRAWN BY:	S. D. COOPER	DATE:	3-14
CHECKED BY:	T. J. BEACH	DATE:	3-14
DESIGN ENGINEER OF RECORD:	M. AVERETTE	DATE:	3-14

8/15/2014 3:10:33 PM G:\Projects\2013\U-2579B\Structures\Site 17\Site 17 Drawings\Final\U-2579B_sd_site 17_ts.dgn