DocuSign Envelope ID: 1818FB5B-B49A-4408-B1F1-58B42B1D31FD

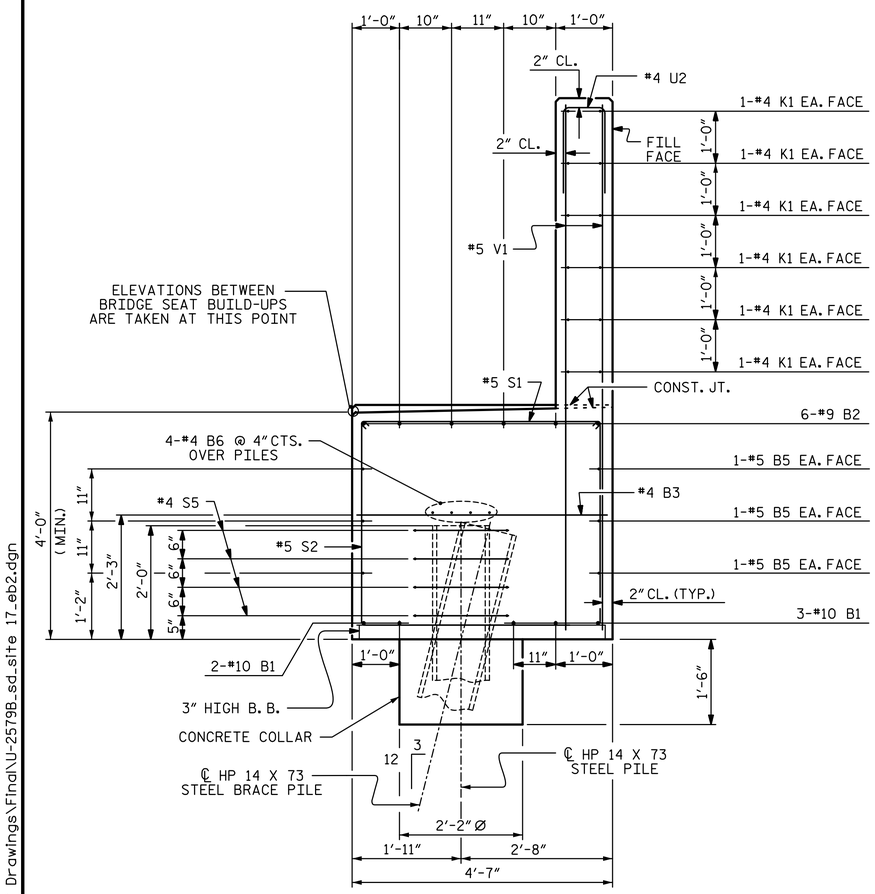

SECTION A-A

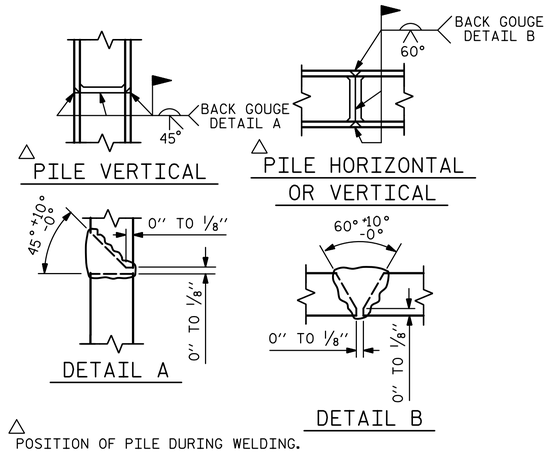

PILE SPLICE DETAILS

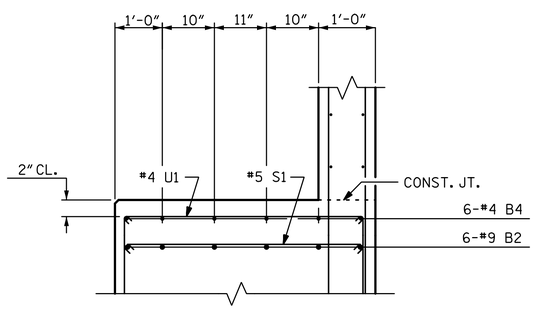

SECTION B-B

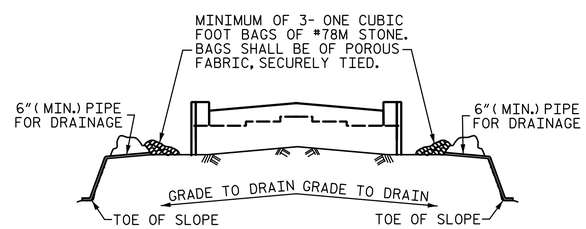

BAGGED STONE AND PIPE SHALL BE PLACED IMMEDIATELY AFTER COMPLETION OF END BENT EXCAVATION. PIPE MAY BE EITHER CONCRETE, CORRUGATED STEEL, CORRUGATED ALUMINUM ALLOY, OR CORRUGATED PLASTIC. PERFORATED PIPE WILL NOT BE ALLOWED.

BAGGED STONE SHALL REMAIN IN PLACE UNTIL THE ENGINEER DIRECTS THAT IT BE REMOVED. THE CONTRACTOR SHALL REMOVE AND DISPOSE OF SILT ACCUMULATIONS AT BAGGED STONE WHEN SO DIRECTED BY THE ENGINEER. BAGS SHALL BE REMOVED AND REPLACED WHENEVER THE ENGINEER DETERMINES THAT THEY HAVE DETERIORATED AND LOST THEIR EFFECTIVENESS.

NO SEPARATE PAYMENT WILL BE MADE FOR THIS WORK AND THE ENTIRE COST OF THIS WORK SHALL BE INCLUDED IN THE UNIT CONTRACT PRICE BID FOR THE SEVERAL PAY ITEMS.

TEMPORARY DRAINAGE AT END BENT

BAR TYPES

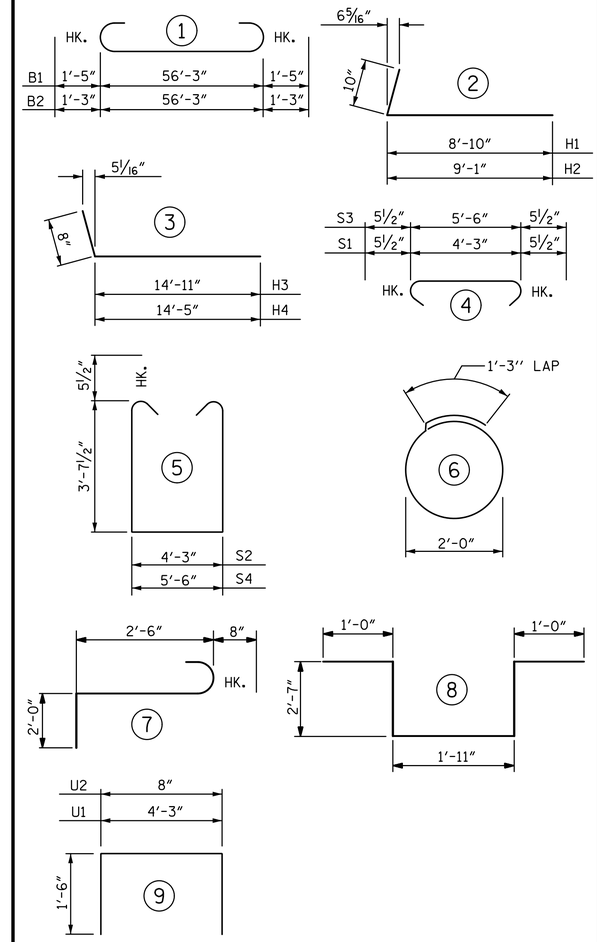

ALL BAR DIMENSIONS ARE OUT TO OUT

BILL OF MATERIAL

END BENT 2

BAR	NO.	SIZE	TYPE	LENGTH	WEIGHT
B1	5	10	1	59'-1"	1271
B2	6	9	1	58'-9"	1199
B3	14	4	STR	4'-3"	40
B4	12	4	STR	3'-2"	25
B5	6	5	STR	56'-6"	354
B6	8	4	STR	29'-8"	159
H1	24	5	2	9'-8"	242
H2	24	5	2	9'-11"	248
H3	13	4	3	15'-7"	135
H4	13	4	3	15'-1"	131
K1	24	4	STR	29'-8"	476
K2	4	4	STR	4'-2"	11
K3	4	4	STR	4'-3"	11
S1	84	5	4	5'-2"	453
S2	84	5	5	12'-5"	1088
S3	2	5	4	6'-5"	13
S4	2	5	5	13'-8"	29
S5	28	4	6	7'-6"	140
S6	3	6	7	5'-2"	23
S7	3	6	8	9'-1"	41
U1	8	4	9	7'-3"	39
U2	48	4	9	3'-8"	118
V1	96	5	STR	9'-6"	951
V2	29	5	STR	11'-6"	348
V3	41	5	STR	11'-3"	481

TOTAL REINFORCING STEEL	8026 LB
CLASS "A" CONCRETE BREAKDOWN	
POUR 1 (CAP, COLLARS, & LOWER WINGS)	45.8 CY
POUR 2 (BACKWALL & UPPER WINGS)	19.9 CY
TOTAL CLASS "A" CONCRETE	65.7 CY
HP 14 X 73 STEEL PILES NO. 8	180 LF
STEEL PILE POINTS	NO. 8

PROJECT NO. U-2579B
FORSYTH COUNTY
STATION: 23+59.12 -Y5-

SHEET 3 OF 3

STATE OF NORTH CAROLINA
DEPARTMENT OF TRANSPORTATION
RALEIGH
SUBSTRUCTURE

END BENT 2

DRAWN BY: S. D. COOPER DATE: 3-14
CHECKED BY: T. J. BEACH DATE: 3-14
DESIGN ENGINEER OF RECORD: M. AVERETTE DATE: 3-14

PLANS PREPARED BY:
SIMPSON ENGINEERS & ASSOCIATES
5640 Dillard Drive
Suite 200
Cary, NC 27518
(919) 852-0468
(919) 852-0598 (Fax)
www.simpsonengr.com
LICENSURE NO. C-2521

NORTH CAROLINA PROFESSIONAL SEAL 029908 ENGINEER MARK A. AVERETTE
Mark A. Averette
8/15/2014

REVISIONS								SHEET NO.
NO.	BY:	DATE:	NO.	BY:	DATE:			S-654
1			3					TOTAL SHEETS
2			4					S-707

8/15/2014 3:10:42 PM G:\Projects\2013\U-2579B\Structures\Site 17\Site 17 Drawings\Final\U-2579B_sd_site 17_eb2.dgn