DEAD LOAD DEFLECTION TABLE FOR GIRDERS

0.6″Ø LOW RELAXATION	SPAN A GIRDERS 1 - 5																				
TWENTIETH POINTS	℄ BRG.	.05	.10	.15	.20	.25	.30	.35	.40	.45	.50	.55	.60	.65	.70	.75	.80	.85	.90	.95	℄ BRG.
CAMBER (GIRDER ALONE IN PLACE) ↑	0.000	0.088	0.154	0.215	0.267	0.311	0.346	0.374	0.394	0.406	0.410	0.406	0.394	0.374	0.346	0.311	0.267	0.215	0.154	0.088	0.000
✱ DEFLECTION DUE TO SUPERIMPOSED D.L. ↓	0.000	0.031	0.061	0.092	0.119	0.144	0.165	0.182	0.194	0.201	0.204	0.201	0.194	0.182	0.165	0.144	0.119	0.092	0.061	0.031	0.000
FINAL CAMBER ↑	0	11/16″	1 1/8″	1 1/2″	1 3/4″	2″	2 3/16″	2 5/16″	2 3/8″	2 7/16″	2 1/2″	2 7/16″	2 3/8″	2 5/16″	2 3/16″	2″	1 3/4″	1 1/2″	1 1/8″	11/16″	0

DEAD LOAD DEFLECTION TABLE FOR GIRDERS

0.6″Ø LOW RELAXATION	SPAN B GIRDERS 1 - 5										
TENTH POINTS	℄ BRG.	.1	.2	.3	.4	.5	.6	.7	.8	.9	℄ BRG.
CAMBER (GIRDER ALONE IN PLACE) ↑	0.000	0.051	0.090	0.118	0.134	0.140	0.134	0.118	0.090	0.051	0.000
✱ DEFLECTION DUE TO SUPERIMPOSED D.L. ↓	0.000	0.015	0.030	0.042	0.050	0.052	0.050	0.042	0.030	0.015	0.000
FINAL CAMBER ↑	0	7/16″	11/16″	15/16″	1″	1 1/16″	1″	15/16″	11/16″	7/16″	0

DEAD LOAD DEFLECTION TABLE FOR GIRDERS

0.6″Ø LOW RELAXATION	SPAN C GIRDERS 1 - 5										
TENTH POINTS	℄ BRG.	.1	.2	.3	.4	.5	.6	.7	.8	.9	℄ BRG.
CAMBER (GIRDER ALONE IN PLACE) ↑	0.000	0.054	0.095	0.124	0.141	0.147	0.141	0.124	0.095	0.054	0.000
✱ DEFLECTION DUE TO SUPERIMPOSED D.L. ↓	0.000	0.019	0.037	0.051	0.060	0.063	0.060	0.051	0.037	0.019	0.000
FINAL CAMBER ↑	0	7/16″	11/16″	7/8″	1″	1″	1″	7/8″	11/16″	7/16″	0

✱ INCLUDES FUTURE WEARING SURFACE.

ALL VALUES ARE SHOWN IN FEET (DECIMAL FORM), EXCEPT "FINAL CAMBER", WHICH IS GIVEN IN INCHES (FRACTION FORM).

NOTES

ALL PRESTRESSING STRANDS SHALL BE 7-WIRE LOW-RELAXATION GRADE 270 STRANDS AND SHALL CONFORM TO AASHTO M203 EXCEPT FOR SAMPLING REQUIREMENTS WHICH SHALL BE IN ACCORDANCE WITH THE STANDARD SPECIFICATIONS.

ALL REINFORCING STEEL SHALL BE GRADE 60.

APPLY EPOXY PROTECTIVE COATING TO END OF GIRDER SURFACES INDICATED IN ELEVATION VIEW.

EMBEDDED PLATE "B-1" SHALL BE GALVANIZED IN ACCORDANCE WITH THE STANDARD SPECIFICATIONS. BEVEL EDGES OF PLATE "B-1" TO GIVE CLOSE FIT BUT NOT TIGHT FIT TO STEEL CASTING FORM.

ANCHOR STUDS SHALL CONFORM TO AASHTO M169 GRADES 1010 THROUGH 1020 OR APPROVED EQUAL, AND SHALL MEET THE TYPE "B" REQUIREMENTS OF SUBSECTION 7.3 OF THE ANSI/AASHTO/AWS D1.5 BRIDGE WELDING CODE.

AT ENDS OF GIRDERS TO BE EMBEDDED IN CONCRETE DIAPHRAGMS OR END WALLS, PRESTRESSING STRANDS MAY EXTEND A MAXIMUM OF 2″ BEYOND THE GIRDER ENDS. OTHERWISE, PRESTRESSING STRANDS SHALL BE CUT FLUSH WITH THE GIRDER ENDS.

THE TRANSFER OF LOAD FROM THE ANCHORAGES TO THE GIRDER SHALL BE DONE WHEN CONCRETE HAS REACHED A COMPRESSIVE STRENGTH OF NOT LESS THAN 7300 PSI (SPAN A) AND 5500 PSI (SPAN B AND SPAN C).

DEPENDING ON THE TYPE OF SYSTEM USED TO SUPPORT THE DECK SLAB FORMS, PRESET ANCHORS MAY BE NECESSARY IN THE PRESTRESSED CONCRETE GIRDER.

THE TOP SURFACE OF THE GIRDER, EXCLUDING THE OUTSIDE 4″, SHALL BE RAKED TO A DEPTH OF 1/4″.

WHEN DRAPED STRANDS ARE DETAILED, THE LONGITUDINAL LOCATION OF THE HOLD DOWN DEVICES SHALL BE WITHIN 6″ OF THE LOCATION SHOWN AND THE CENTER OF GRAVITY OF THE GROUP OF DRAPED STRANDS SHALL BE LOCATED WITHIN 1/2″ OF THE THEORETICAL LOCATION SHOWN.

A 2″ x 2″ CHAMFER IS ALLOWED AT THE INTERSECTION OF THE WEB AND THE BOTTOM FLANGE.

THE CONTRACTOR HAS THE OPTION TO PROVIDE, AT NO ADDITIONAL COST TO THE DEPARTMENT, 2 ADDITIONAL STRANDS AT THE TOP OF THE GIRDER TO FACILITATE TYING OF THE REINFORCING STEEL. THESE STRANDS SHALL BE PULLED TO A LOAD OF 4500 lbs.

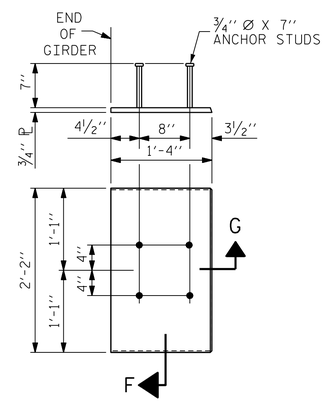

EMBEDDED PLATE "B-1" DETAILS

(2 REQ'D PER GIRDER)

SECTION "G"

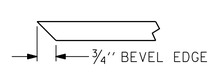

SECTION "F"

(SEE NOTES)

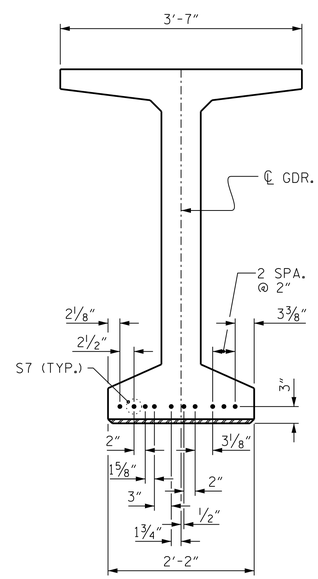

DETAIL "C"

PROJECT NO. U-2579B

FORSYTH COUNTY

STATION: 52+94.28 -Y4RPBD-

STATE OF NORTH CAROLINA
DEPARTMENT OF TRANSPORTATION
RALEIGH

STANDARD

PRESTRESSED CONCRETE GIRDER
CONTINUOUS FOR LIVE LOAD
DETAILS

DESIGNED BY:	J. BORUTA	DATE :	APR 2014
DRAWN BY:	K. WHITE	DATE :	APR 2014
CHECKED BY:	J. SHERMAN	DATE :	APR 2014
DESIGN ENGINEER OF RECORD:	J. DOUGHTY	DATE :	MAY 2014

DRAWN BY : ELR 11/91
CHECKED BY : GRP 11/91

REV. 7/10/01RR LES/RDR
REV. 5/1/06 TLA/GM
REV. 10/1/11 MAA/GM

PARSONS BRINCKERHOFF
434 FAYETTEVILLE STREET
SUITE 1500
RALEIGH, NC 27601
LICENSE NO. F-0165

NORTH CAROLINA PROFESSIONAL SEAL 032967 ENGINEER JASON R. DOUGHTY

6/2/2014
DocuSigned by:
Jason R Doughty
00F1C86448274F7...

REVISIONS								SHEET NO.
NO.	BY:	DATE:	NO.	BY:	DATE:			S-603
1			3					TOTAL SHEETS
2			4					707

STR. #16 STD. NO. PCG9

6/2/2014
173498C_SD_CG_1604pcg9_12.dgn