NOTES

TRANSVERSE CONSTRUCTION JOINTS ARE PARALLEL TO BENTS.

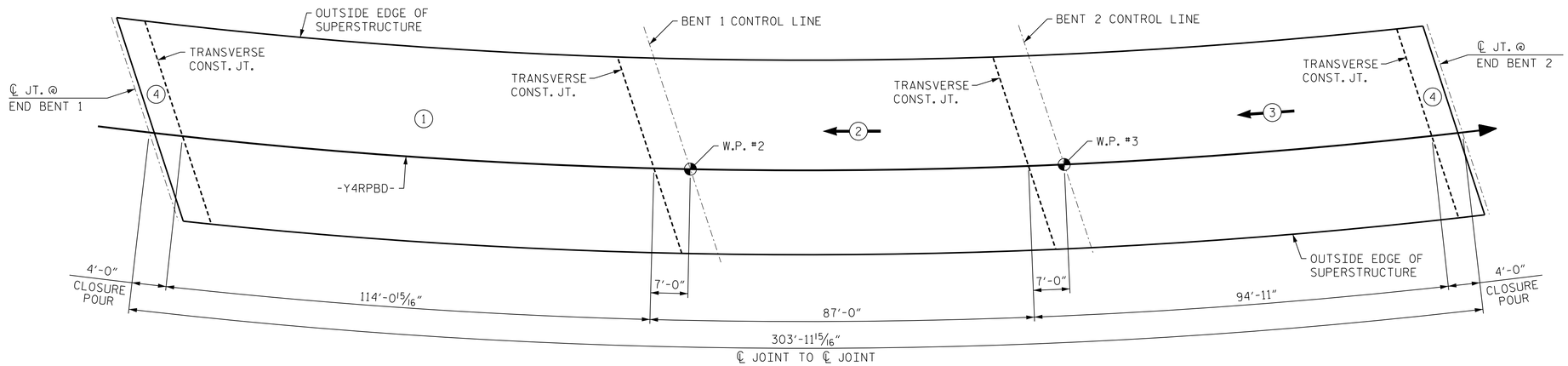

POURING SEQUENCE

ALL DIMENSIONS MEASURED ALONG -Y4RPBD-

= INDICATES THE NUMBER AND DIRECTION OF POUR

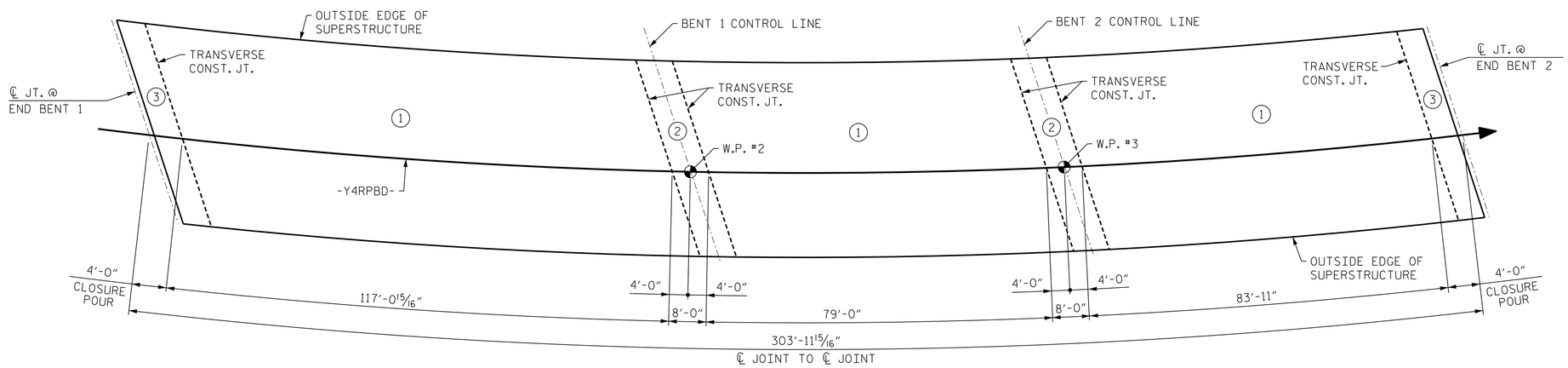

OPTIONAL POURING SEQUENCE

ALL DIMENSIONS MEASURED ALONG -Y4RPBD-

POUR (2) CANNOT BE STARTED UNTIL BOTH ADJACENT POUR (1)'s REACH A MINIMUM OF 3000 psi

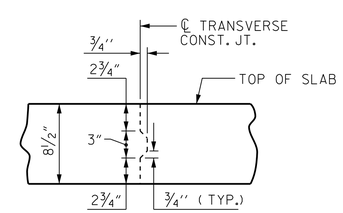

TRANSVERSE CONSTRUCTION JOINT DETAIL

NOTE: REINFORCING STEEL IN SLAB NOT SHOWN. LONGITUDINAL REINFORCING STEEL SHALL BE CONTINUOUS THROUGH JOINT

PROJECT NO. U-2579B

FORSYTH COUNTY

STATION: 52+94.28 -Y4RPBD-

STATE OF NORTH CAROLINA
DEPARTMENT OF TRANSPORTATION
RALEIGH

SUPERSTRUCTURE

POURING SEQUENCE

DESIGNED BY:	B. LOFLIN	DATE :	APR 2014
DRAWN BY:	K. WHITE	DATE :	APR 2014
CHECKED BY:	J. SHERMAN	DATE :	APR 2014
DESIGN ENGINEER OF RECORD:	J. DOUGHTY	DATE :	MAY 2014

PARSONS BRINCKERHOFF
434 FAYETTEVILLE STREET
SUITE 1500
RALEIGH, NC 27601
LICENSE NO. F-0165

NORTH CAROLINA PROFESSIONAL SEAL 032967 ENGINEER JASON R. DOUGHTY

DocuSigned by: 6/2/2014
Jason R Doughty
00F1C86448274F7...

REVISIONS						SHEET NO.
NO.	BY:	DATE:	NO.	BY:	DATE:	S-610
1			3			TOTAL SHEETS
2			4			707

STR. #16

6/2/2014
173498C_SD_PO_1601.dgn