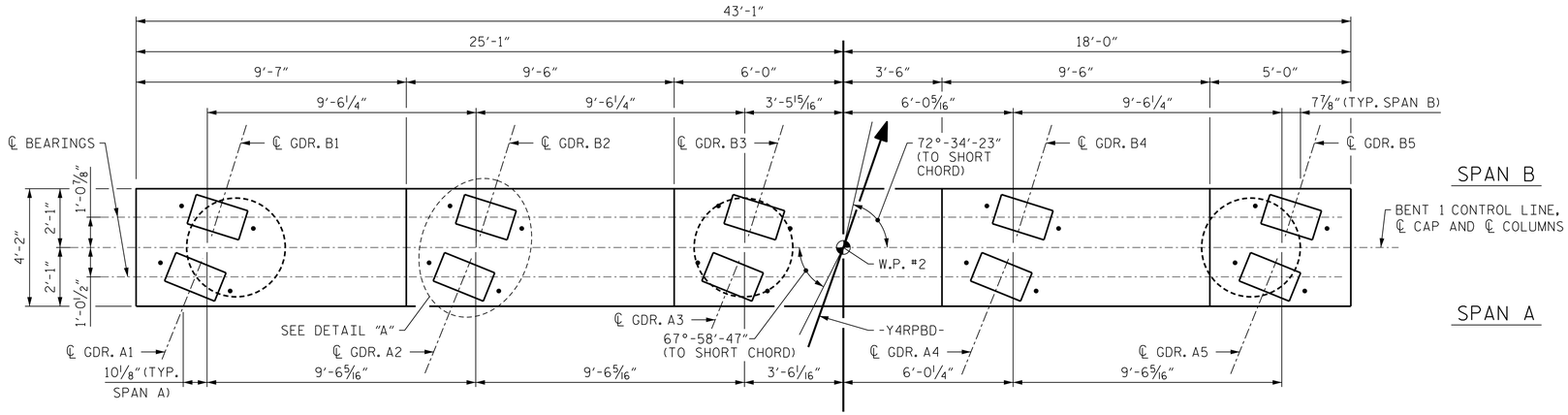

PLAN

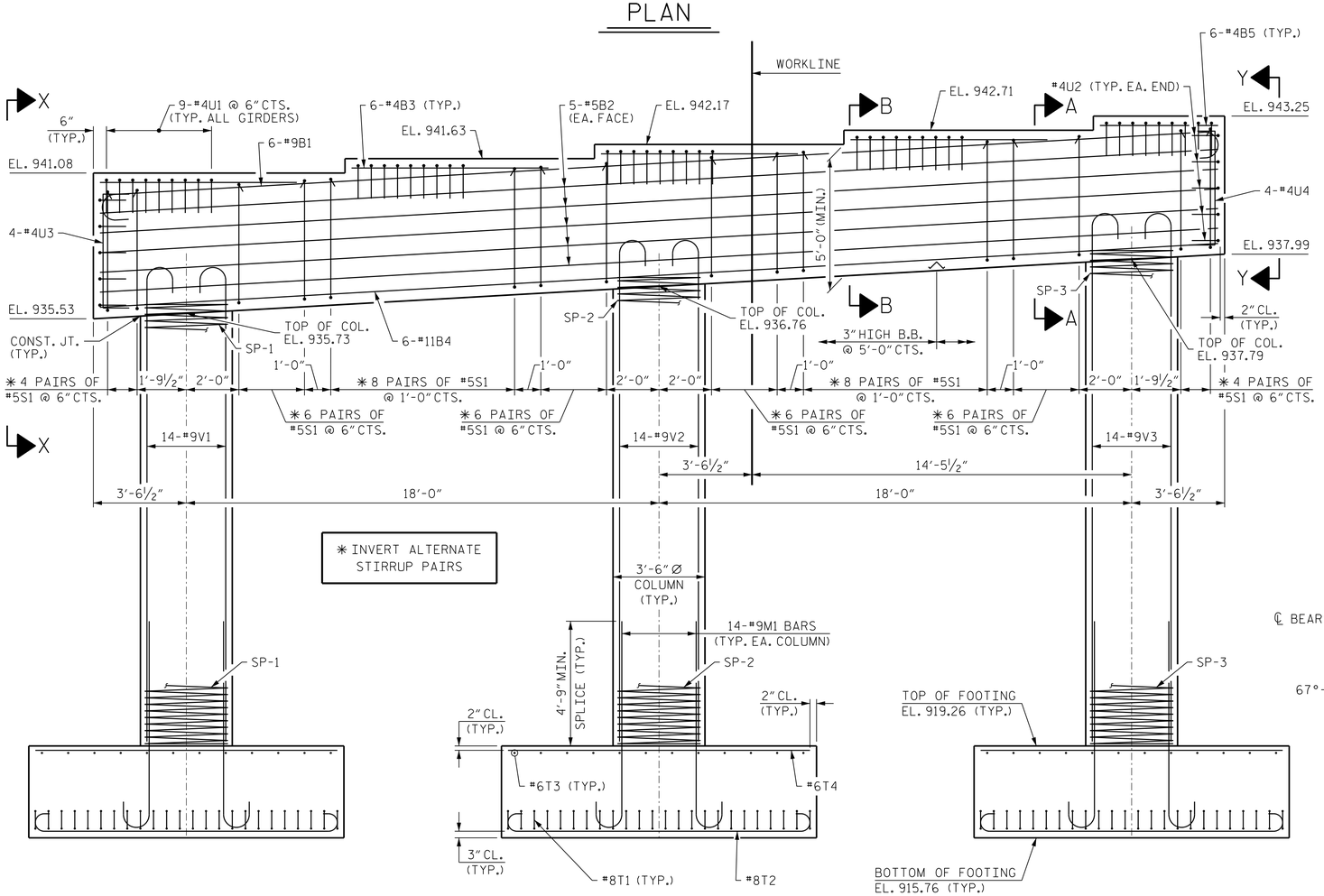

ELEVATION

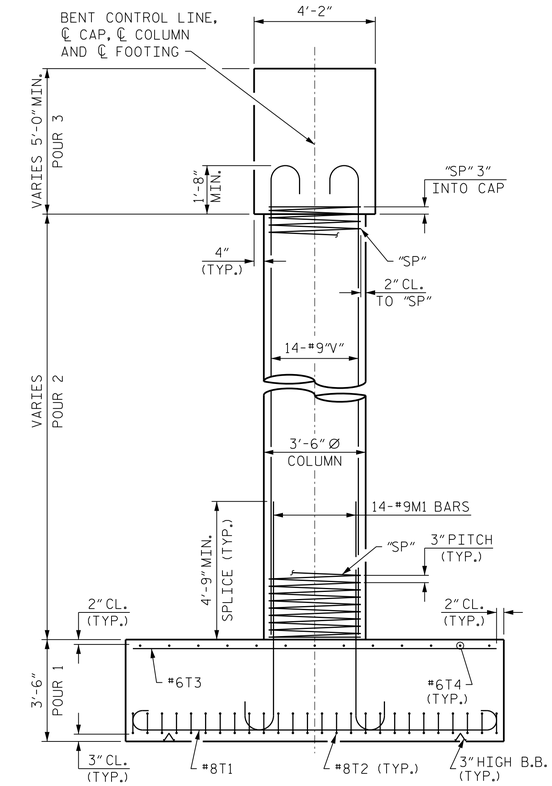

END ELEVATION

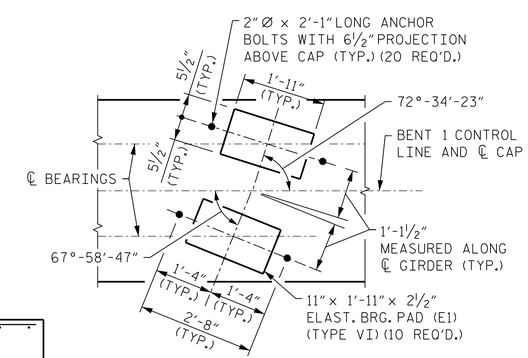

DETAIL "A"

TYPICAL AT EACH BEARING

NOTES

STIRRUPS AND "U" BARS IN CAP MAY BE SHIFTED SLIGHTLY, AS NECESSARY, TO CLEAR ANCHOR BOLTS.

HOOKS ON M1 BARS MAY BE TURNED AS NECESSARY FOR PLACING REINFORCING STEEL.

THE TOP SURFACE AREAS OF THE CAP SHALL BE CURED IN ACCORDANCE WITH THE STANDARD SPECIFICATIONS EXCEPT THE MEMBRANE CURING COMPOUND METHOD SHALL NOT BE USED.

FOR SECTIONS A-A AND B-B, AND VIEWS X-X AND Y-Y, SEE SHEET 2 OF 2.

PROJECT NO. U-2579B

FORSYTH COUNTY

STATION: 52+94.28 -Y4RPBD-

SHEET 1 OF 2

STATE OF NORTH CAROLINA
DEPARTMENT OF TRANSPORTATION
RALEIGH

SUBSTRUCTURE

BENT 1

DESIGNED BY:	J. BORUTA	DATE :	APR 2014
DRAWN BY:	K. WHITE	DATE :	APR 2014
CHECKED BY:	B. LOFLIN	DATE :	APR 2014
DESIGN ENGINEER OF RECORD:	J. DOUGHTY	DATE :	MAY 2014

PARSONS BRINCKERHOFF
434 FAYETTEVILLE STREET
SUITE 1500
RALEIGH, NC 27601
LICENSE NO. F-0165

NORTH CAROLINA PROFESSIONAL SEAL 032967 ENGINEER JASON R. DOUGHTY

DocuSigned by: Jason R Doughty 6/2/2014
00F1C86448274F7...

REVISIONS								SHEET NO.
NO.	BY:	DATE:	NO.	BY:	DATE:			S-615
1			3					TOTAL SHEETS
2			4					707

STR. #16

6/2/2014
173498C_SD_IB_1611.dgn