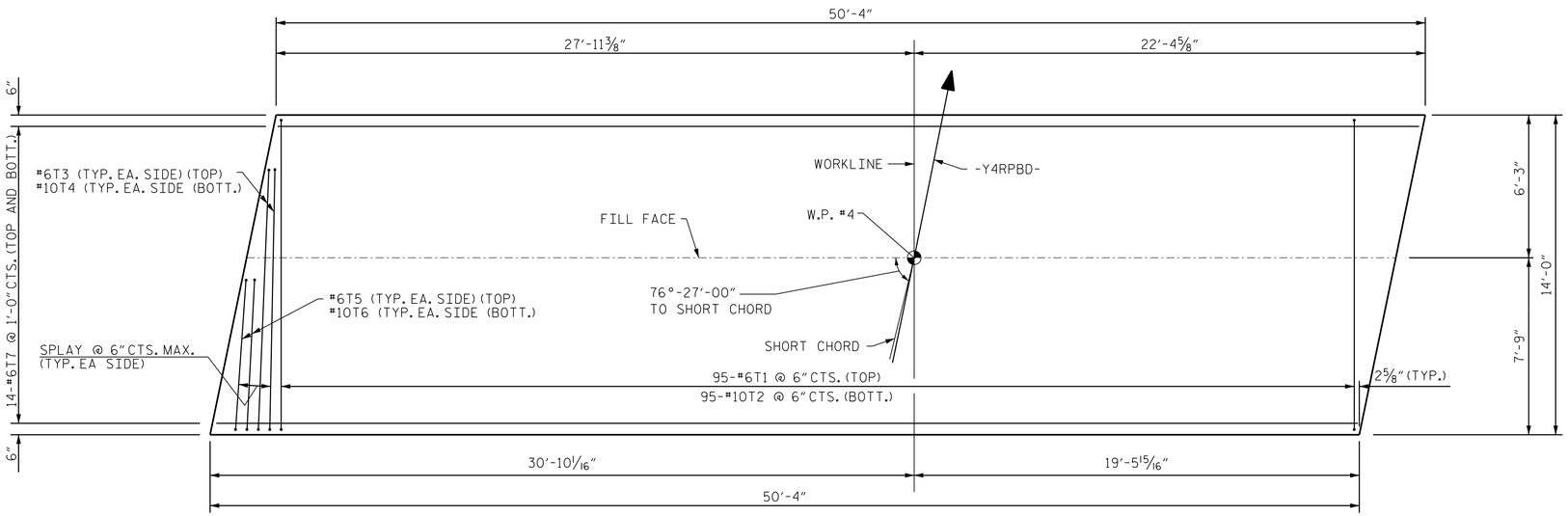

PLAN OF FOOTING

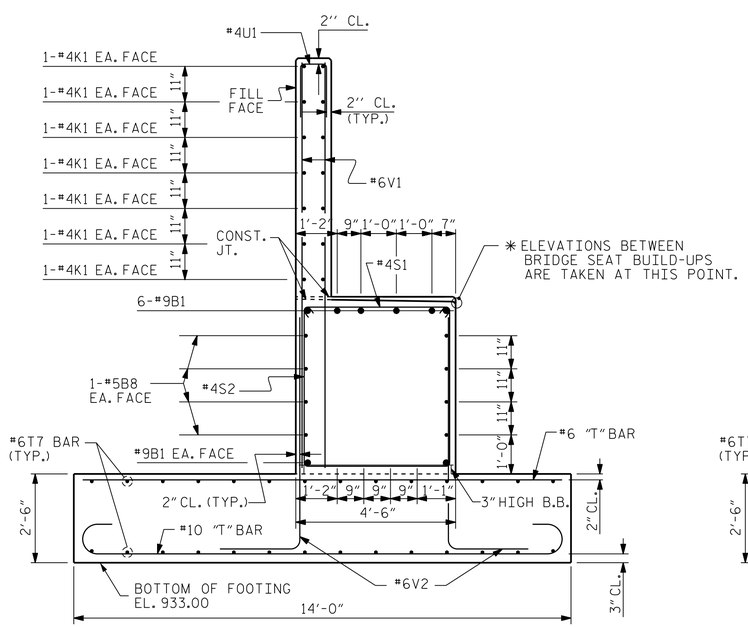

SECTION A-A

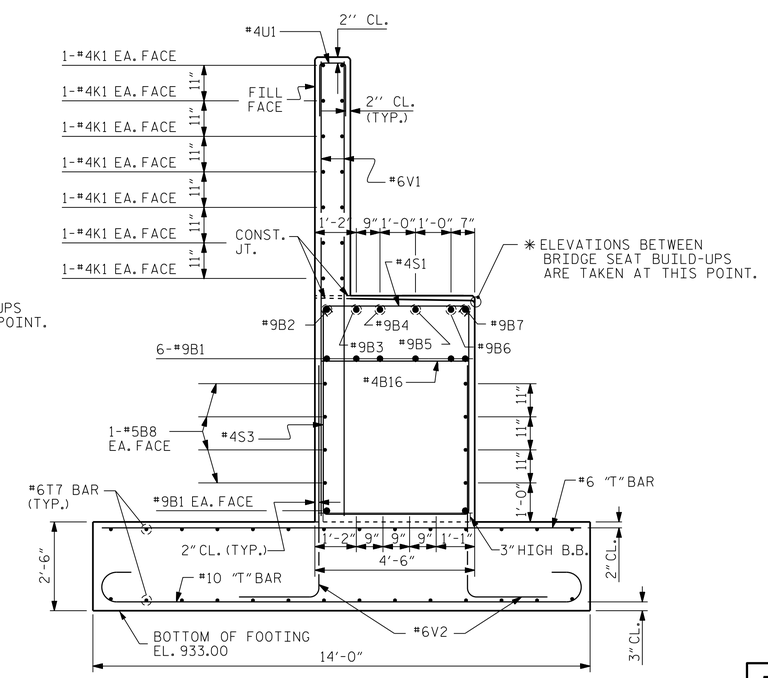

SECTION B-B

PROJECT NO. U-2579B

FORSYTH COUNTY

STATION: 52+94.28 -Y4RPBD-

SHEET 4 OF 5

STATE OF NORTH CAROLINA
DEPARTMENT OF TRANSPORTATION
RALEIGH

SUBSTRUCTURE

END BENT 2

DESIGNED BY:	J. SHERMAN	DATE :	APR. 2014
DRAWN BY:	J. SHERMAN	DATE :	APR. 2014
CHECKED BY:	J. BORUTA	DATE :	APR. 2014
DESIGN ENGINEER OF RECORD:	J. DOUGHTY	DATE :	MAY 2014

PARSONS BRINCKERHOFF
434 FAYETTEVILLE STREET
SUITE 1500
RALEIGH, NC 27601
LICENSE NO. F-0165

NORTH CAROLINA PROFESSIONAL SEAL 032967 ENGINEER JASON R. DOUGHTY

DocuSigned by: Jason R Doughty 00F1C86448274F7... 6/2/2014

REVISIONS								SHEET NO.
NO.	BY:	DATE:	NO.	BY:	DATE:			S-622
1			3					TOTAL SHEETS
2			4					707

STR. #16

6/2/2014
173498C_SD_EB_1624.dgn