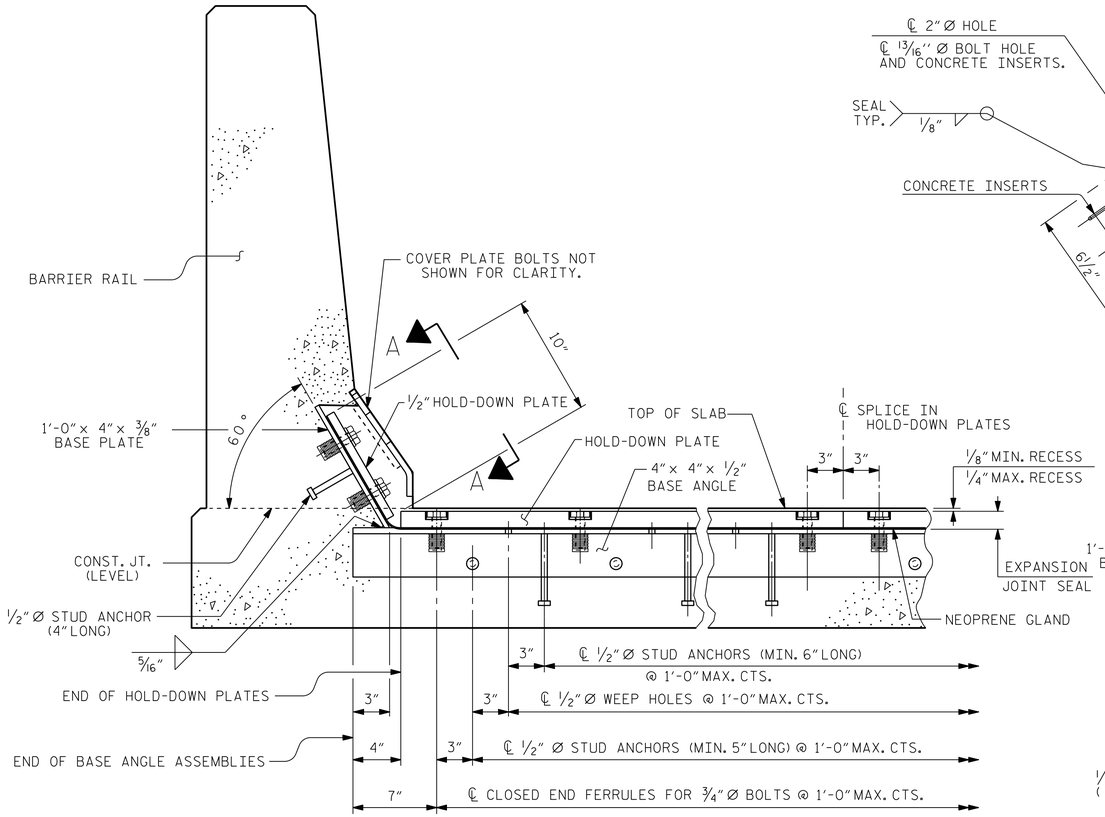

SECTION THRU RAIL NORMAL TO JOINT

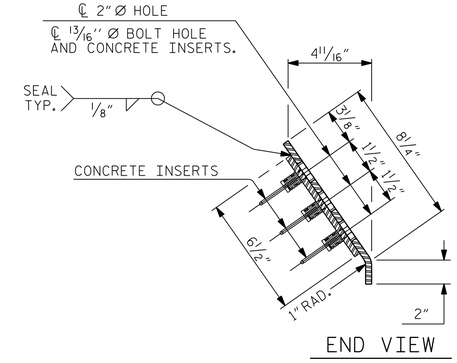

END VIEW

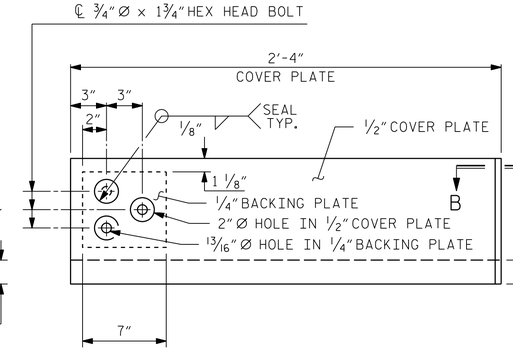

TYPE I - ELEVATION VIEW

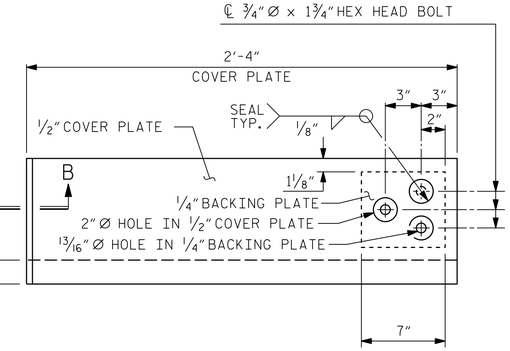

TYPE II - ELEVATION VIEW

COVER PLATE DETAILS

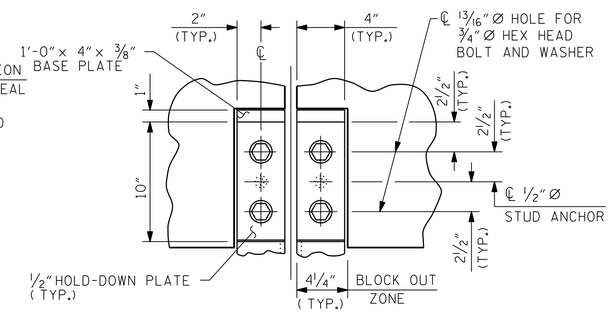

SECTION A - A

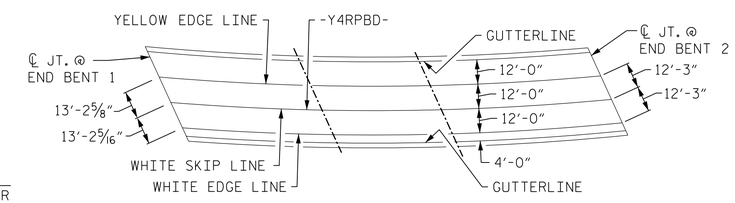

PAVEMENT MARKING ALIGNMENT

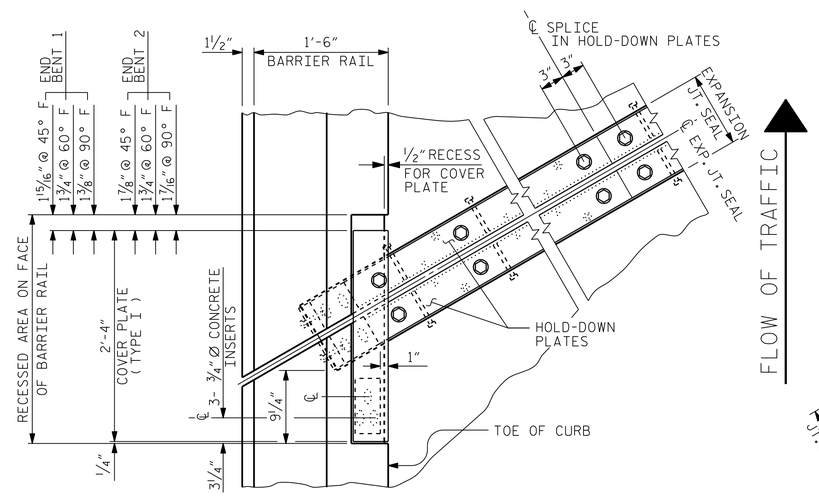

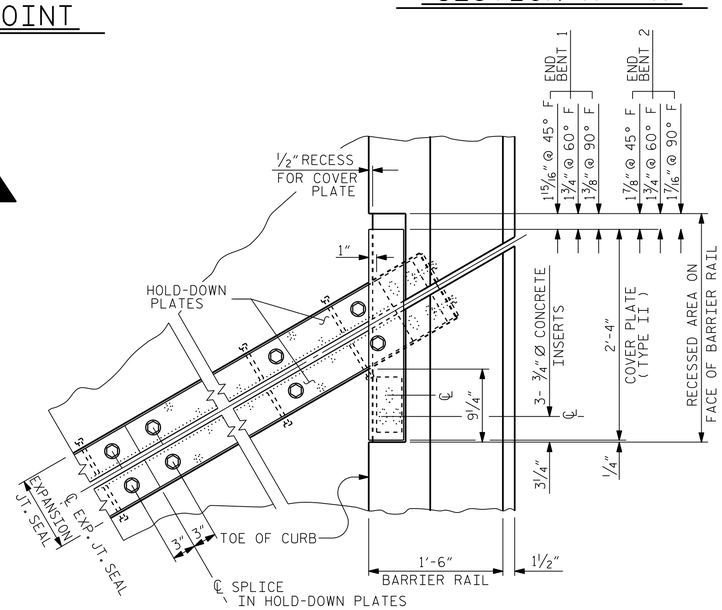

PLAN OF EXPANSION JOINT SEAL

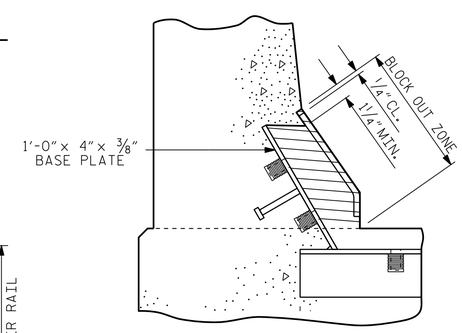

BLOCK OUT DETAIL

SEE "SECTION A - A" FOR OTHER DETAILS.

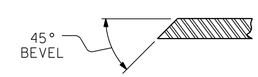

SECTION B - B

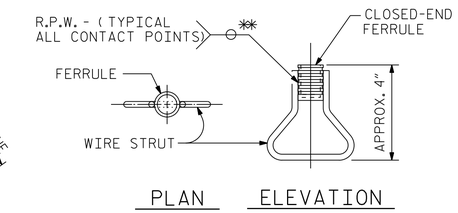

CONCRETE INSERT

** EACH WELDED ATTACHMENT OF WIRE TO FERRULE SHALL DEVELOP THE TENSILE STRENGTH OF THE WIRE.

PROJECT NO. U-2579B

FORSYTH COUNTY

STATION: 52+94.28 -Y4RPBD-

SHEET 2 OF 2

STATE OF NORTH CAROLINA
DEPARTMENT OF TRANSPORTATION
RALEIGH

STANDARD

EXPANSION JOINT SEAL DETAILS FOR BARRIER RAIL

DESIGNED BY: J. SMITH	DATE : APR 2014	DRAWN BY : REK 9/87	REV. 10/1/11 MAA/GM
DRAWN BY: K. WHITE	DATE : APR 2014	CHECKED BY : CRK 10/87	REV. 7/12 MAA/GM
CHECKED BY: B. LOFLIN	DATE : APR 2014		REV. 6/13 MAA/GM
DESIGN ENGINEER OF RECORD: J. DOUGHTY	DATE : MAY 2014		

PARSONS BRINCKERHOFF
434 FAYETTEVILLE STREET
SUITE 1500
RALEIGH, NC 27601
LICENSE NO. F-0165

NORTH CAROLINA PROFESSIONAL SEAL 032967 ENGINEER JASON R. DOUGHTY

DocuSigned by: Jason R Doughty 6/2/2014
00F1C86448274F7...

REVISIONS						SHEET NO.
NO.	BY:	DATE:	NO.	BY:	DATE:	S-609
1			3			TOTAL SHEETS
2			4			707

STR. #16 STD. NO. EJS2 SHT 3b

6/2/2014
173498C_SD_EJ2_16std.dgn