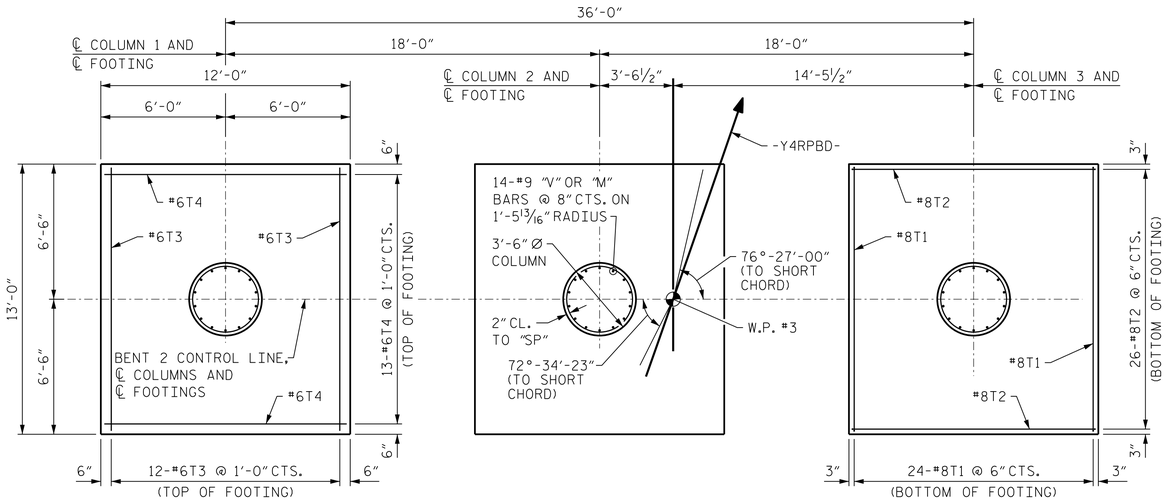

PLAN OF FOOTINGS AND COLUMNS

(REINFORCING STEEL AND DIMENSIONS ARE TYPICAL FOR EACH FOOTING AND COLUMN)

BAR TYPES

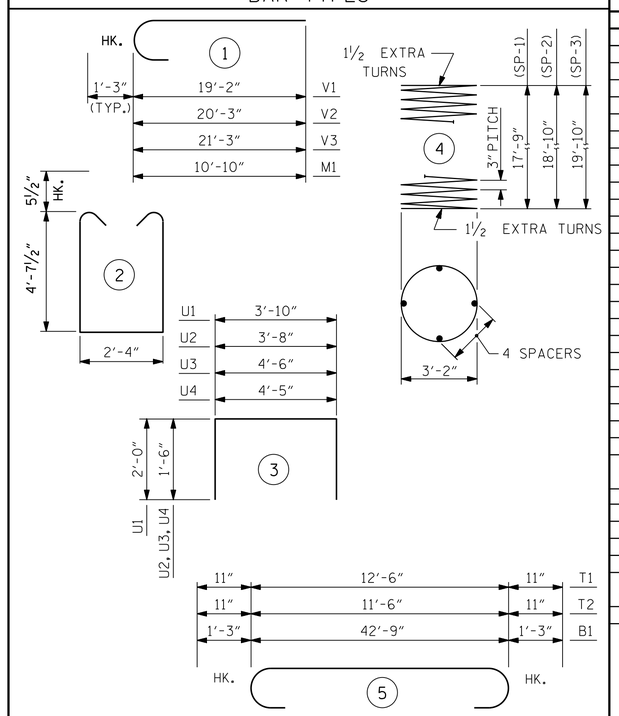

ALL BAR DIMENSIONS ARE OUT TO OUT.

BILL OF MATERIAL

BAR	NUMBER	SIZE	TYPE	LENGTH	WEIGHT
B1	6	9	5	45'-3"	923
B2	10	5	STR	42'-9"	446
B3	24	4	STR	7'-6"	120
B4	6	11	STR	42'-9"	1363
B5	6	4	STR	4'-6"	18
M1	42	9	1	12'-1"	1726
V1	14	9	1	20'-5"	972
V2	14	9	1	21'-6"	1023
V3	14	9	1	22'-6"	1071
S1	96	5	2	12'-6"	1252
T1	72	8	5	14'-4"	2755
T2	78	8	5	13'-4"	2777
T3	36	6	STR	12'-6"	676
T4	39	6	STR	11'-6"	674
U1	45	4	3	7'-10"	235
U2	10	4	3	6'-8"	45
U3	4	4	3	7'-6"	20
U4	4	4	3	7'-5"	20
REINFORCING STEEL				LBS.	16,116
SP-1	1	✱✱	4	726'-9"	485
SP-2	1	✱✱	4	775'-10"	518
SP-3	1	✱✱	4	815'-2"	545
SPIRAL COLUMN REINFORCING STEEL				LBS.	1,548

CLASS "A" CONCRETE BREAKDOWN

POUR #1 - FOOTINGS	60.7 C.Y.
POUR #2 - COLUMNS	19.8 C.Y.
POUR #3 - CAP	35.2 C.Y.
CLASS "A" CONCRETE	115.7 C.Y.

✱✱ THE SP-1, SP-2 AND SP-3 SPIRAL REINFORCING STEEL SHALL BE W20 OR D-20 COLD DRAWN WIRE OR #4 PLAIN OR DEFORMED BAR.

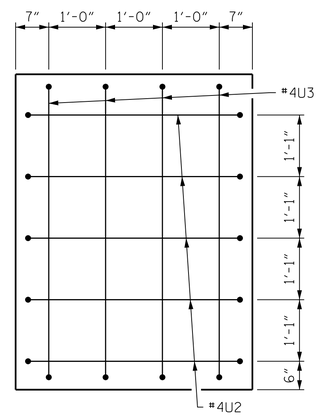

VIEW X-X

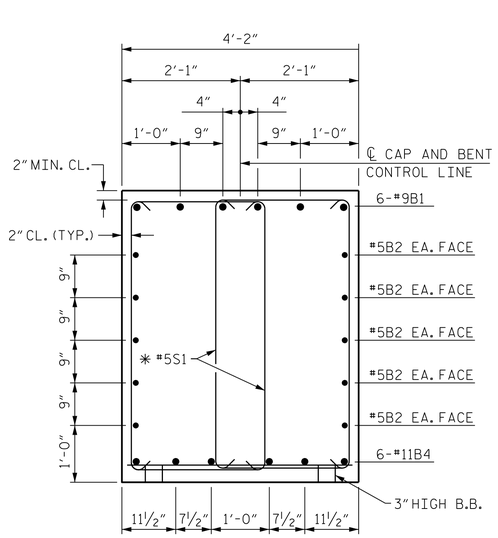

SECTION A-A

✱ INVERT ALTERNATE STIRRUP PAIRS

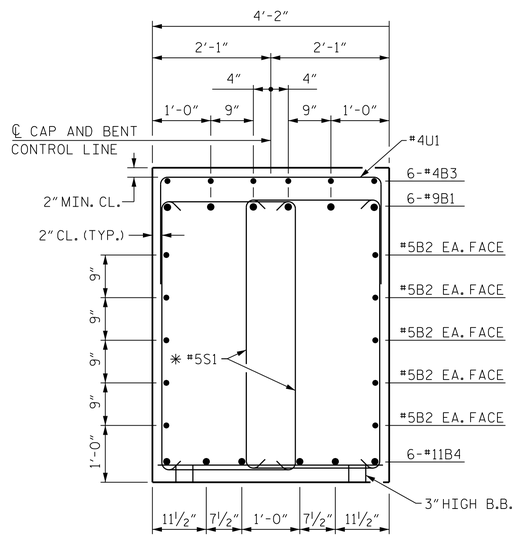

SECTION B-B

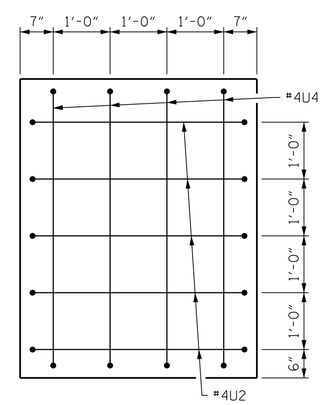

VIEW Y-Y

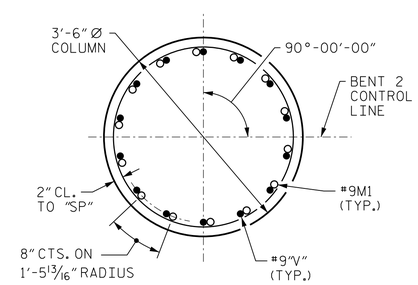

COLUMN DETAIL

PROJECT NO. U-2579B

FORSYTH COUNTY

STATION: 52+94.28 -Y4RPBD-

SHEET 2 OF 2

STATE OF NORTH CAROLINA
DEPARTMENT OF TRANSPORTATION
RALEIGH

SUBSTRUCTURE

BENT 2

DESIGNED BY:	J. BORUTA	DATE :	APR 2014
DRAWN BY:	K. WHITE	DATE :	APR 2014
CHECKED BY:	J. DOUGHTY	DATE :	APR 2014
DESIGN ENGINEER OF RECORD:	J. DOUGHTY	DATE :	MAY 2014

PARSONS BRINCKERHOFF
434 FAYETTEVILLE STREET
SUITE 1500
RALEIGH, NC 27601
LICENSE NO. F-0165

NORTH CAROLINA PROFESSIONAL SEAL 032967 ENGINEER JASON R. DOUGHTY

DocuSigned by: Jason R Doughty 00F1C86448274F7... 6/2/2014

REVISIONS						SHEET NO.
NO.	BY:	DATE:	NO.	BY:	DATE:	S-618
1			3			TOTAL SHEETS
2			4			707

STR. #16

6/2/2014
173498C_SD_IB_1622.dgn