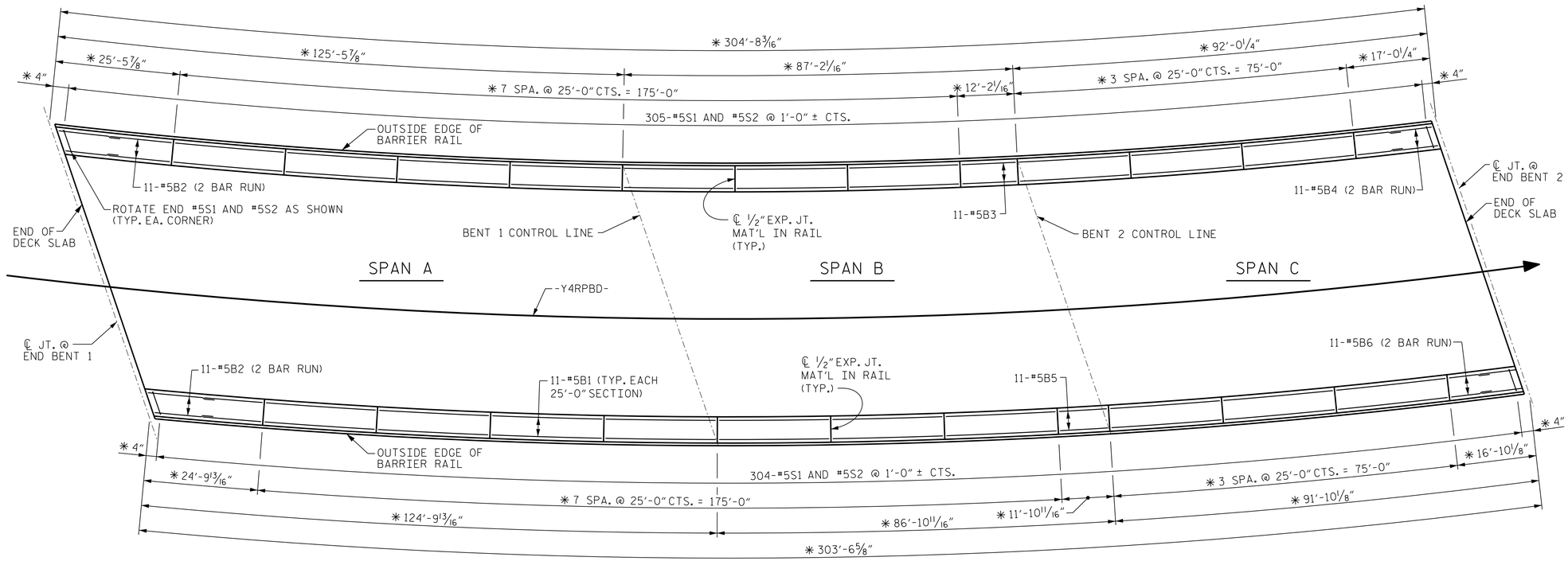

PLAN OF BARRIER RAIL

✱ ARC DIMENSION ALONG OUTSIDE EDGE OF BARRIER RAIL.

BAR TYPES

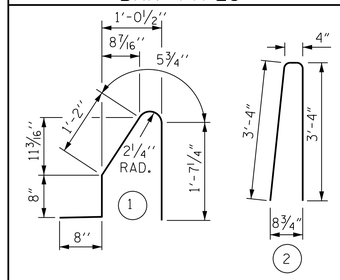

ALL BAR DIMENSIONS ARE OUT TO OUT

BILL OF MATERIAL

FOR CONCRETE BARRIER RAIL ONLY

BAR	NO.	SIZE	TYPE	LENGTH	WEIGHT
✱ B1	220	#5	STR	24-7"	5641
✱ B2	44	#5	STR	14'-3"	654
✱ B3	11	#5	STR	11'-9"	135
✱ B4	22	#5	STR	10'-2"	233
✱ B5	11	#5	STR	11'-5"	131
✱ B6	22	#5	STR	10'-0"	229
✱ S1	609	#5	1	4'-7"	2911
✱ S2	609	#5	2	7'-0"	4446

✱ EPOXY COATED REINFORCING STEEL	14,380 LBS.
CLASS AA CONCRETE	82.6 CU. YDS.
CONCRETE BARRIER RAIL	608.23 LIN. FT.

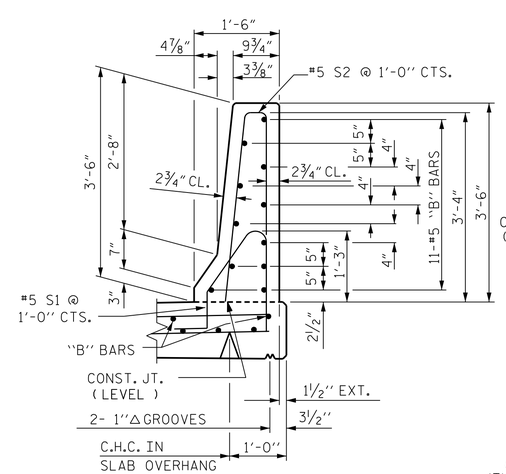

SECTION THRU RAIL

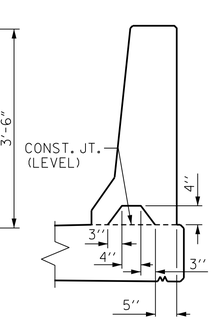

SECTION S-S

AT DAM IN OPEN JOINT
(THIS IS TO BE USED ONLY WHEN SLIP FORM IS USED)

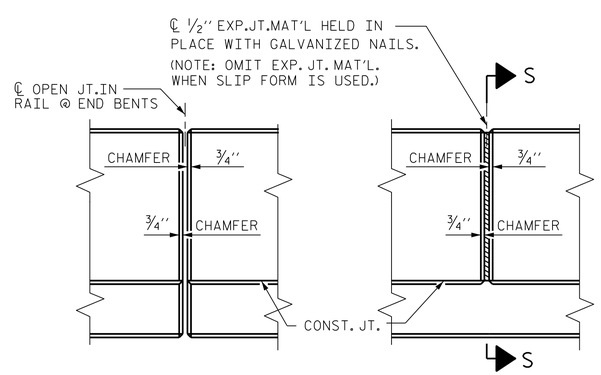

ELEVATION AT EXPANSION JOINTS

BARRIER RAIL DETAILS

NOTES

THE BARRIER RAIL IN A CONTINUOUS UNIT SHALL NOT BE CAST UNTIL ALL SLAB CONCRETE IN THAT UNIT HAS BEEN CAST AND HAS REACHED A MINIMUM COMPRESSIVE STRENGTH OF 3,000 PSI.

ALL REINFORCING STEEL IN BARRIER RAILS SHALL BE EPOXY COATED.

GROOVED CONTRACTION JOINTS, 1/2" IN DEPTH, SHALL BE TOOLED IN ALL EXPOSED FACES OF THE BARRIER RAIL AND IN ACCORDANCE WITH ARTICLE 825-10(B) OF THE STANDARD SPECIFICATIONS. THE CONTRACTION JOINT SHALL BE LOCATED AT EACH THIRD POINT BETWEEN BARRIER RAIL EXPANSION JOINTS. ONLY ONE CONTRACTION JOINT IS REQUIRED AT MIDPOINT OF BARRIER RAIL SEGMENTS LESS THAN 20 FEET IN LENGTH AND NO CONTRACTION JOINTS ARE REQUIRED FOR THOSE SEGMENTS LESS THAN 10 FEET IN LENGTH.

FOR CONCRETE BARRIER RAIL ON APPROACH SLABS, SEE APPROACH SLAB SHEETS.

PROJECT NO. U-2579B
FORSYTH COUNTY
STATION: 52+94.28 -Y4RPBD-

STATE OF NORTH CAROLINA
DEPARTMENT OF TRANSPORTATION
RALEIGH

STANDARD
CONCRETE BARRIER RAIL

DESIGNED BY:	J. SMITH	DATE :	APR 2014
DRAWN BY:	K. WHITE	DATE :	APR 2014
CHECKED BY:	B. LOFLIN	DATE :	APR 2014
DESIGN ENGINEER OF RECORD:	J. DOUGHTY	DATE :	MAY 2014

DRAWN BY : ARB 5/87
CHECKED BY : SJD 9/87

REV. 10/1/11	MAA/GM
REV. 7/12	MAA/GM
REV. 6/13	MAA/GM

PARSONS BRINCKERHOFF
434 FAYETTEVILLE STREET
SUITE 1500
RALEIGH, NC 27601
LICENSE NO. F-0165

NORTH CAROLINA PROFESSIONAL SEAL 032967 ENGINEER JASON R. DOUGHTY
DocuSigned by: Jason R Doughty 6/2/2014
00F1C86448274F7...

REVISIONS							
NO.	BY:	DATE:	NO.	BY:	DATE:	SHEET NO.	S-606
1			3			TOTAL SHEETS	707
2			4				

STR. #16

STD. NO. CBR1 (SHT 2)

6/2/2014
173498C_SD_CBR_1601.dgn