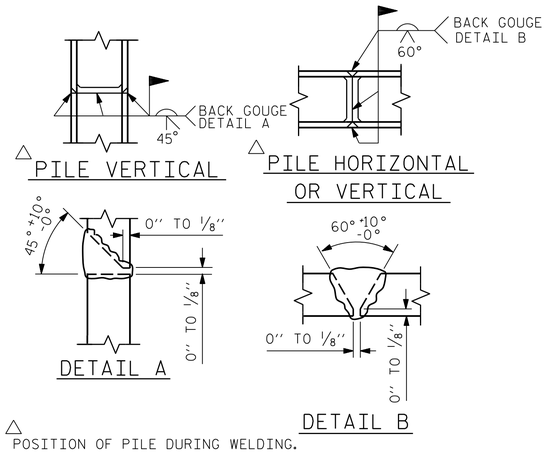

△ POSITION OF PILE DURING WELDING.

PILE SPLICE DETAILS

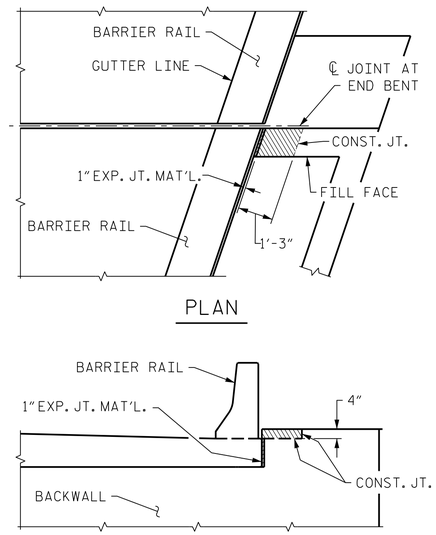

BLOCKOUT IN WING WALL

NOTE: THE CONCRETE IN THE SHADED AREA OF THE WING SHALL BE POURED AFTER THE BARRIER RAIL IS CAST IF SLIP FORMING IS USED.

BAR TYPES

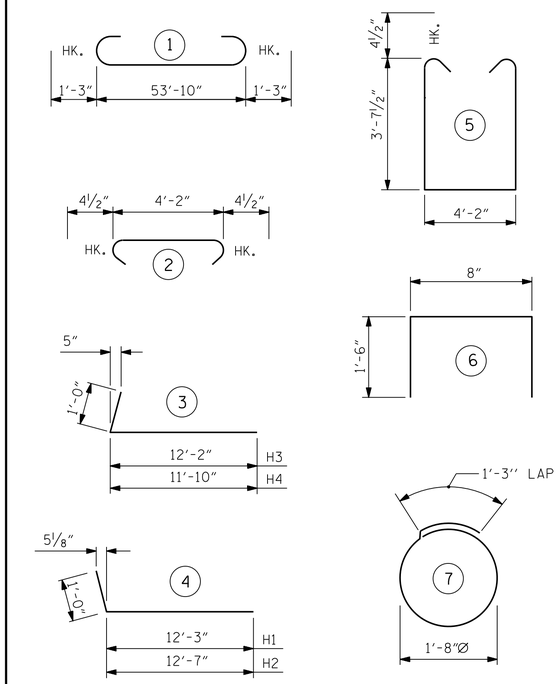

ALL BAR DIMENSIONS ARE OUT TO OUT.

BILL OF MATERIAL
END BENT 1

BAR	NUMBER	SIZE	TYPE	LENGTH	WEIGHT
B1	12	#9	1	56'-4"	2298
B2	8	#5	STR	53'-10"	449
B3	8	#4	STR	28'-2"	150
B4	14	#4	STR	4'-2"	39
H1	29	#5	4	13'-3"	401
H2	29	#5	4	13'-7"	411
H3	28	#5	3	13'-2"	385
H4	28	#5	3	12'-10"	375
K1	28	#4	STR	28'-2"	526
K2	8	#4	STR	2'-10"	15
S1	72	#4	5	12'-2"	585
S2	72	#4	2	4'-11"	236
S3	44	#4	7	6'-6"	191
U1	48	#4	6	3'-8"	118
V1	96	#6	STR	10'-0"	1442
V2	32	#5	STR	11'-10"	395
V3	32	#5	STR	11'-5"	381

REINFORCING STEEL LBS. 8,397

CLASS A CONCRETE:

POUR #1 - CAP, LOWER WINGS AND CONCRETE COLLARS C.Y. 43.0

POUR #2 - BACKWALL AND UPPER WINGS C.Y. 21.0

CLASS A CONCRETE C.Y. 64.0

HP 12x53 STEEL PILES
11 REQUIRED. LIN. FT. 297.0

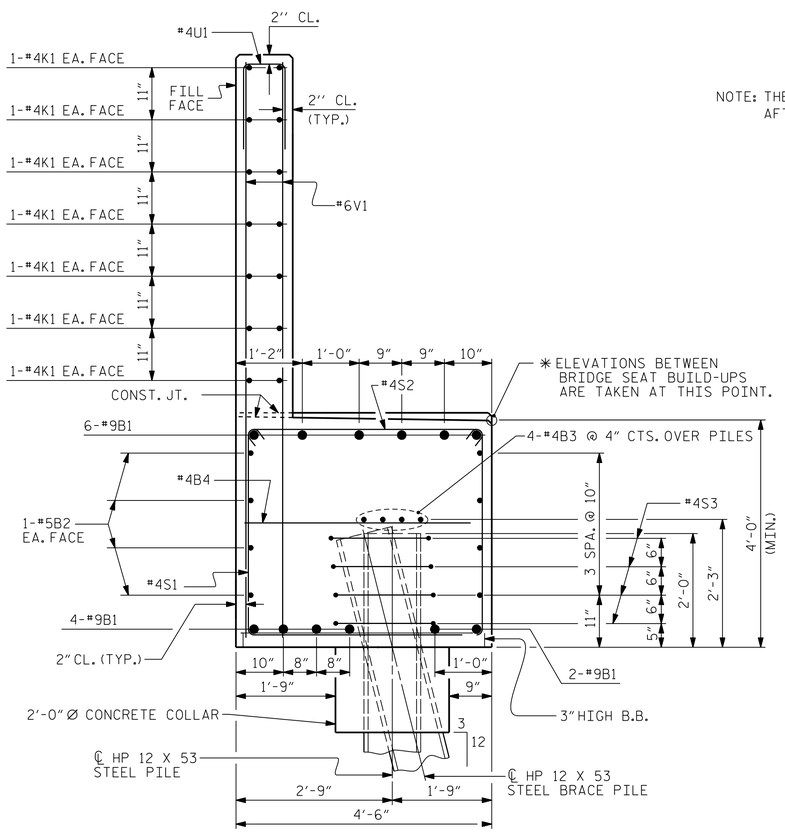

SECTION A-A

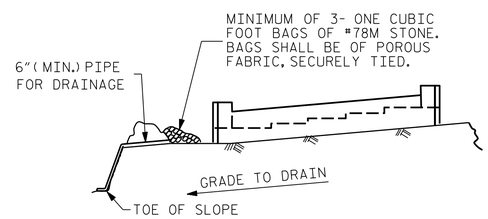

BAGGED STONE AND PIPE SHALL BE PLACED IMMEDIATELY AFTER COMPLETION OF END BENT EXCAVATION. PIPE MAY BE EITHER CONCRETE, CORRUGATED STEEL, CORRUGATED ALUMINUM ALLOY, OR CORRUGATED PLASTIC. PERFORATED PIPE WILL NOT BE ALLOWED.

BAGGED STONE SHALL REMAIN IN PLACE UNTIL THE ENGINEER DIRECTS THAT IT BE REMOVED. THE CONTRACTOR SHALL REMOVE AND DISPOSE OF SILT ACCUMULATIONS AT BAGGED STONE WHEN SO DIRECTED BY THE ENGINEER. BAGS SHALL BE REMOVED AND REPLACED WHENEVER THE ENGINEER DETERMINES THAT THEY HAVE DETERIORATED AND LOST THEIR EFFECTIVENESS.

NO SEPARATE PAYMENT WILL BE MADE FOR THIS WORK AND THE ENTIRE COST OF THIS WORK SHALL BE INCLUDED IN THE UNIT CONTRACT PRICE BID FOR THE SEVERAL PAY ITEMS.

TEMPORARY DRAINAGE AT END BENT

PROJECT NO. U-2579B
FORSYTH COUNTY
STATION: 52+94.28 -Y4RPBD-

SHEET 3 OF 3

STATE OF NORTH CAROLINA
DEPARTMENT OF TRANSPORTATION
RALEIGH

SUBSTRUCTURE
END BENT 1

DESIGNED BY:	J. BORUTA	DATE :	APR 2014
DRAWN BY:	K. WHITE	DATE :	APR 2014
CHECKED BY:	J. SHERMAN	DATE :	APR 2014
DESIGN ENGINEER OF RECORD:	J. DOUGHTY	DATE :	MAY 2014

PARSONS BRINCKERHOFF
434 FAYETTEVILLE STREET
SUITE 1500
RALEIGH, NC 27601
LICENSE NO. F-0165

NORTH CAROLINA PROFESSIONAL SEAL 032967 ENGINEER JASON R. DOUGHTY

DocuSigned by: 6/2/2014
Jason R Doughty
00F1C86448274F7...

REVISIONS						SHEET NO.
NO.	BY:	DATE:	NO.	BY:	DATE:	S-614
1			3			TOTAL SHEETS
2			4			707

STR. #16

6/2/2014
173498C_SD_EB_1613.dgn