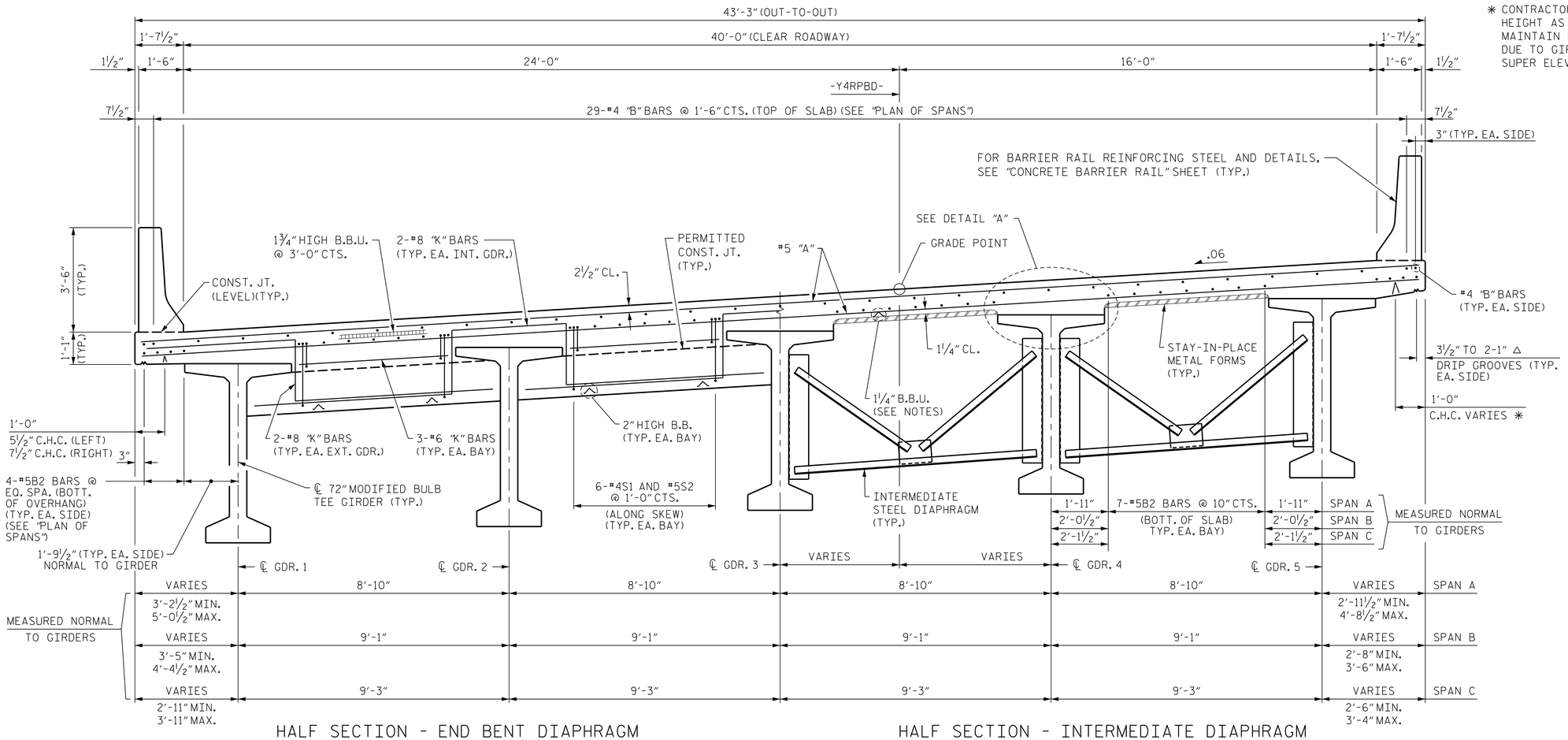

✳ CONTRACTOR SHALL ADJUST HEIGHT AS NECESSARY TO MAINTAIN PROPER CLEARANCE DUE TO GIRDER CAMBER AND SUPER ELEVATION CHANGE.

HALF SECTION - END BENT DIAPHRAGM

HALF SECTION - INTERMEDIATE DIAPHRAGM

TYPICAL SECTION

FOR INTERMEDIATE STEEL DIAPHRAGM DETAILS, SEE "INTERMEDIATE STEEL DIAPHRAGMS FOR 72" MODIFIED BULB TEE PRESTRESSED CONCRETE GIRDERS" SHEET.

DIMENSIONS ARE RADIAL UNLESS NOTED OTHERWISE

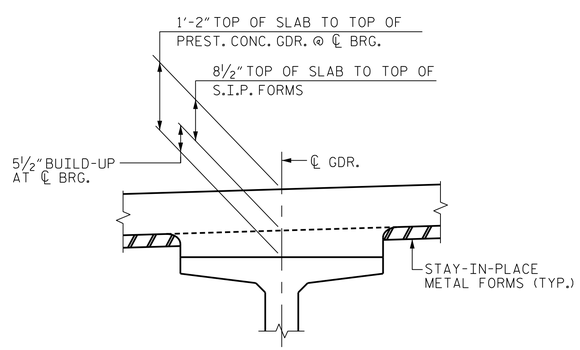

DETAIL "A"

NOTES

PROVIDE 1¼" HIGH BEAM BOLSTERS UPPER AT 3'-0" CTS. ATOP THE METAL STAY-IN-PLACE FORMS TO SUPPORT THE BOTTOM MAT OF "A" BARS. WHEN USING REMOVABLE FORMS, PROVIDE CONTINUOUS HIGH CHAIRS FOR METAL DECK (C.H.C.M.) @ 4'-0" CTS. WITH A HEIGHT TO SUPPORT THE BOTTOM MAT OF "A" BARS A CLEAR DISTANCE OF 2½" ABOVE THE TOP OF THE REMOVABLE FORM.

LONGITUDINAL STEEL MAY BE SHIFTED SLIGHTLY, AS NECESSARY TO AVOID INTERFERENCE WITH STIRRUPS IN PRESTRESSED CONCRETE GIRDERS.

PREVIOUSLY CAST CONCRETE IN A CONTINUOUS UNIT SHALL HAVE ATTAINED A MINIMUM COMPRESSIVE STRENGTH OF 3,000 PSI BEFORE ADDITIONAL CONCRETE IS CAST IN THE UNIT.

BARRIER RAIL IN A CONTINUOUS UNIT SHALL NOT BE CAST UNTIL ALL SLAB CONCRETE IN THE UNIT HAS BEEN CAST AND HAS REACHED A MINIMUM COMPRESSIVE STRENGTH OF 3,000 PSI.

PROJECT NO. U-2579B
FORSYTH COUNTY
STATION: 52+94.28 -Y4RPBD-

SHEET 1 OF 3

STATE OF NORTH CAROLINA
DEPARTMENT OF TRANSPORTATION
RALEIGH

SUPERSTRUCTURE

TYPICAL SECTION

DESIGNED BY:	J. BORUTA	DATE :	MAR 2014
DRAWN BY:	K. WHITE	DATE :	MAR 2014
CHECKED BY:	J. SHERMAN	DATE :	APR 2014
DESIGN ENGINEER OF RECORD:	J. DOUGHTY	DATE :	MAY 2014

PARSONS BRINCKERHOFF
434 FAYETTEVILLE STREET
SUITE 1500
RALEIGH, NC 27601
LICENSE NO. F-0165

NORTH CAROLINA PROFESSIONAL SEAL 032967 ENGINEER JASON R. DOUGHTY

DocuSigned by: Jason R Doughty 00F1C86448274F7... 6/2/2014

REVISIONS

NO.	BY:	DATE:	NO.	BY:	DATE:
1			3		
2			4		

SHEET NO. S-590
TOTAL SHEETS 707

STR. #16

6/2/2014
173498C_SD_TS_1601.dgn