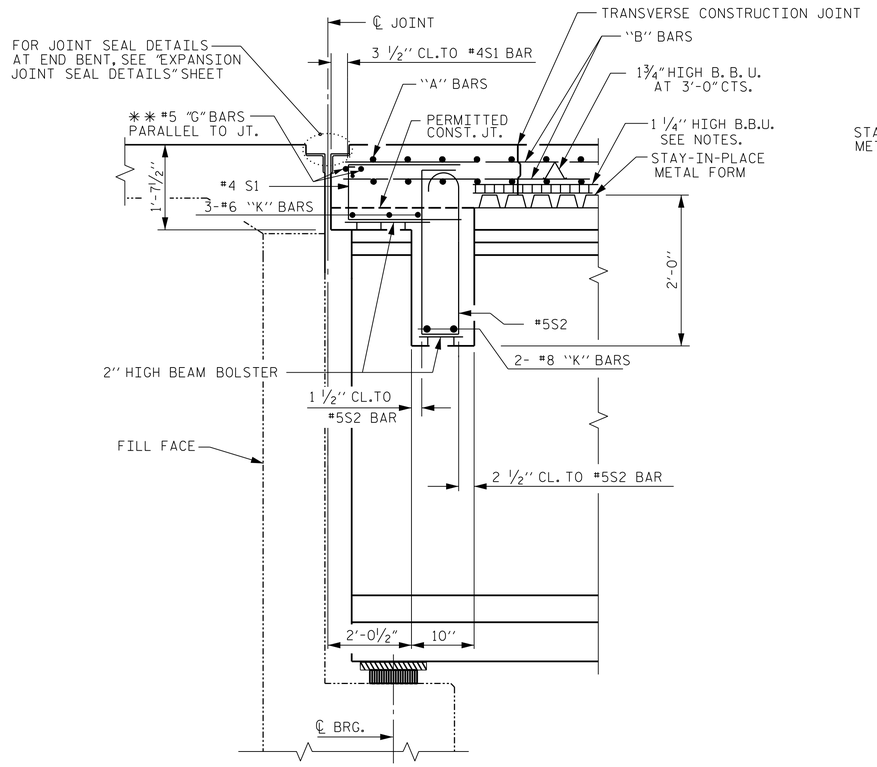

SECTION AT END BENT DIAPHRAGM

** "G" BARS MAY BE SHIFTED SLIGHTLY AS NECESSARY, TO CLEAR REINFORCING STEEL AND STIRRUPS.

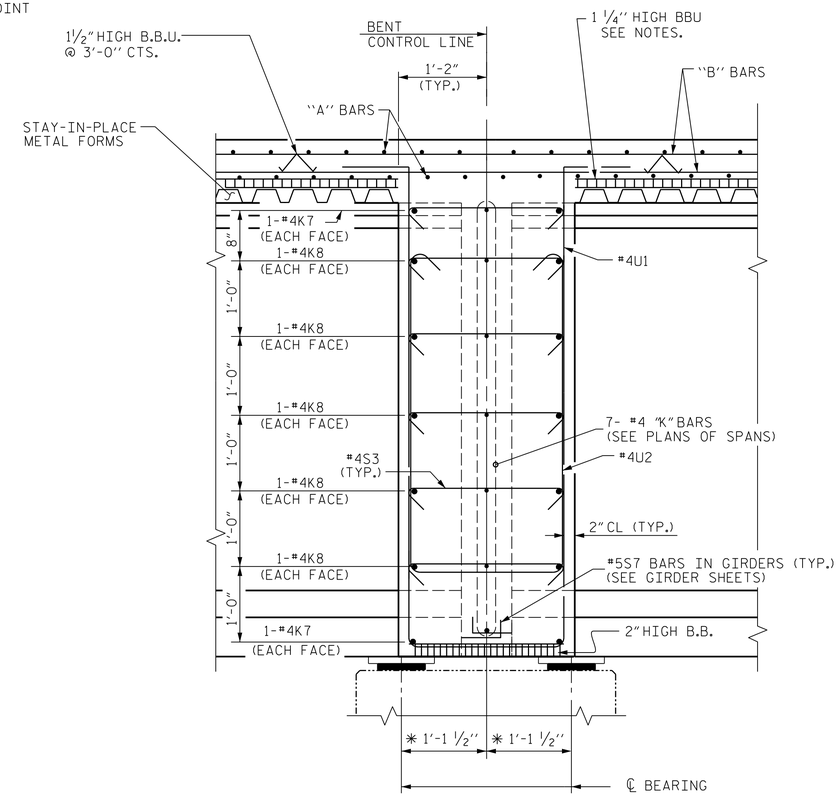

SECTION AT BENT DIAPHRAGM

* MEASURED ALONG ℄ GIRDER

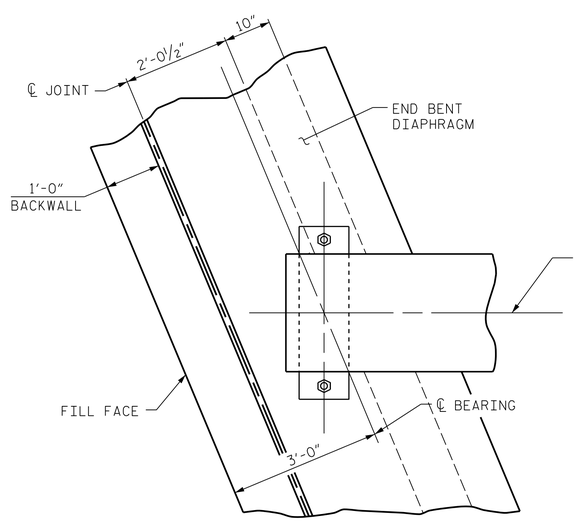

END BENT DIAPHRAGM

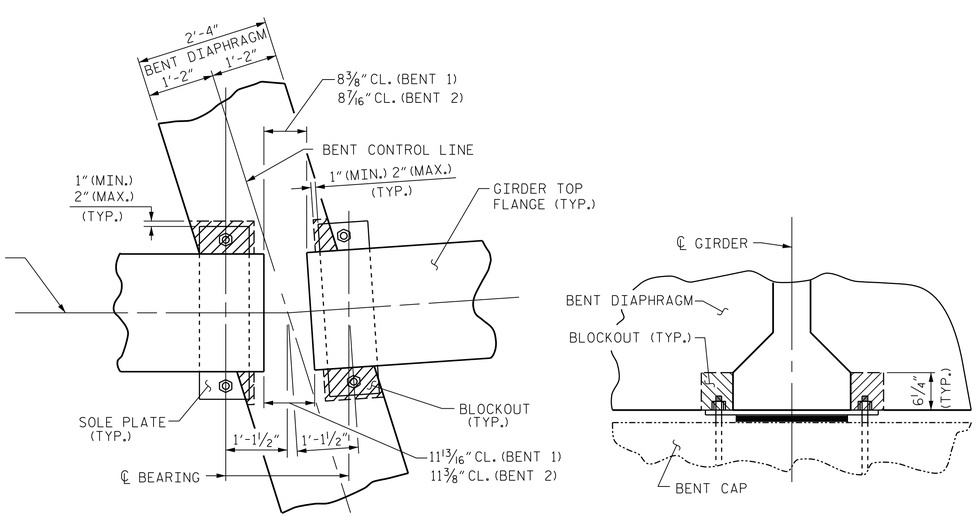

PLAN

SECTION

BENT DIAPHRAGM BLOCK-OUT DETAIL

PROJECT NO. U-2579B

FORSYTH COUNTY

STATION: 52+94.28 -Y4RPBD-

SHEET 3 OF 3

STATE OF NORTH CAROLINA
DEPARTMENT OF TRANSPORTATION
RALEIGH

SUPERSTRUCTURE

TYPICAL SECTION DETAILS

DESIGNED BY: J. SMITH	DATE : MAR 2014
DRAWN BY: K. WHITE	DATE : MAR 2014
CHECKED BY: J. SHERMAN	DATE : APR 2014
DESIGN ENGINEER OF RECORD: J. DOUGHTY	DATE : MAY 2014

PARSONS BRINCKERHOFF
434 FAYETTEVILLE STREET
SUITE 1500
RALEIGH, NC 27601
LICENSE NO. F-0165

NORTH CAROLINA PROFESSIONAL SEAL 032967 ENGINEER JASON R. DOUGHTY
6/2/2014
DocuSigned by: Jason R Doughty
00F1C86448274F7...

REVISIONS								SHEET NO.
NO.	BY:	DATE:	NO.	BY:	DATE:			S-592
1			3					TOTAL SHEETS
2			4					707

STR. #16

6/2/2014
173498C_SD_TS_1603.dgn