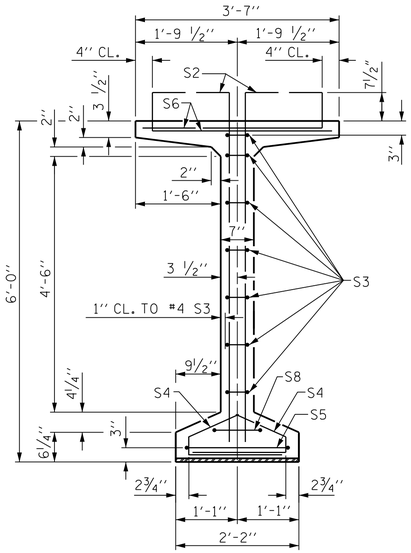

SECTION A-A

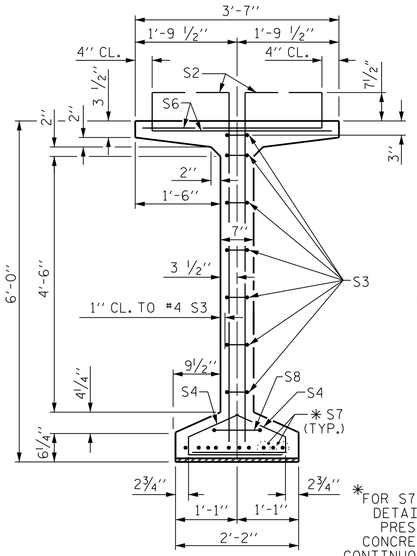

SECTION B-B

✱FOR S7 BARS. SEE DETAIL "C" OF PRESTRESSED CONCRETE GIRDER CONTINUOUS FOR LIVE LOAD DETAILS SHEET

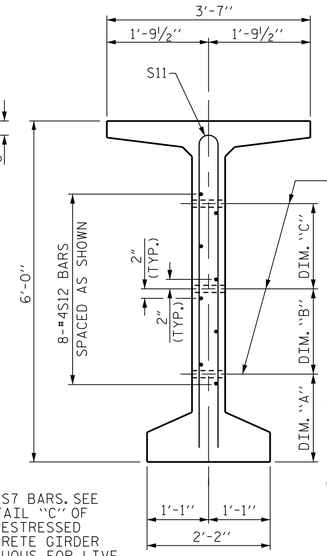

SECTION C-C

(S13, S6 AND S9 BARS NOT SHOWN)

℄ 1 1/2" Ø FORMED HOLE. SEE ELEVATION FOR LOCATION. FOR DIM. "A", "B" & "C" SEE "INTERMEDIATE STEEL DIAPHRAGMS" SHEET.)

DEBONDING LEGEND

- ● FULLY BONDED STRANDS
- ▣ STRANDS DEBONDED FOR 2'-0" FROM END OF GIRDER
- ▲ STRANDS DEBONDED FOR 4'-0" FROM END OF GIRDER
- ⊙ STRANDS DEBONDED FOR 6'-0" FROM END OF GIRDER

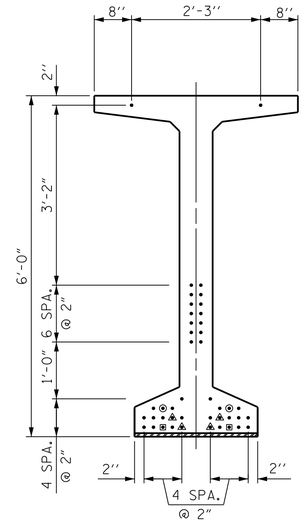

AT END OF GIRDER

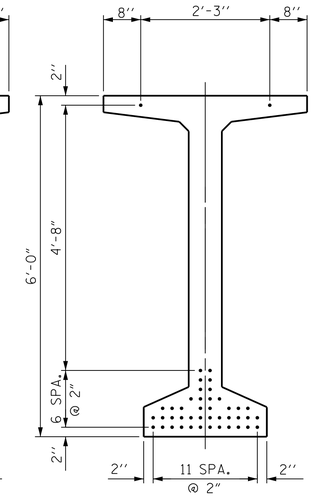

AT ℄ OF GIRDER

0.6" Ø LOW RELAXATION STRAND LAYOUT

0.6" Ø L. R. GRADE 270 STRANDS

AREA (SQUARE INCHES)	ULTIMATE STRENGTH (LBS. PER STRAND)	APPLIED PRESTRESS (LBS. PER STRAND)
0.217	58,600	43,950

REINFORCING STEEL FOR ONE GDR

BAR	NUMBER	SIZE	TYPE	LENGTH	WEIGHT
S1	76	#5	1	7'-0"	555
S2	32	#6	1	7'-0"	336
S3	14	#4	2	8'-5"	79
S4	108	#4	3	3'-0"	216
S5	1	#5	2	9'-10"	10
S6	262	#5	4	4'-6"	1230
✱ S7	10	#5	STR	3'-8"	38
S8	2	#5	2	9'-0"	19
S9	46	#5	STR	3'-3"	156
S10	1	#3	STR	1'-10"	1
S11	8	#5	5	11'-6"	96
S12	16	#4	STR	8'-0"	86
S13	154	#4	1	7'-0"	720

✱ NOTE: S7 BARS SHALL BE BENT BEFORE SHIPMENT. HEAT BENDING SHALL NOT BE ALLOWED.

BAR TYPES

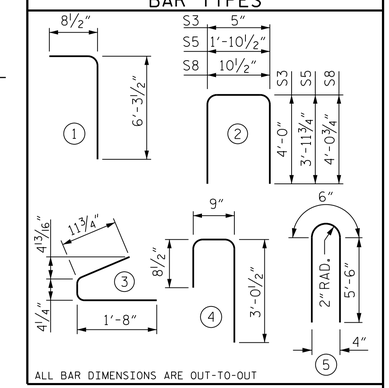

ALL BAR DIMENSIONS ARE OUT-TO-OUT

QUANTITIES FOR ONE GIRDER

	REINFORCING STEEL	8500 PSI CONCRETE	0.6" Ø L.R. STRANDS
	LB.	C.Y.	No.
	3542	26.4	44

GIRDERS REQUIRED

NUMBER	LENGTH	TOTAL LENGTH
5	123.26'	616.30'

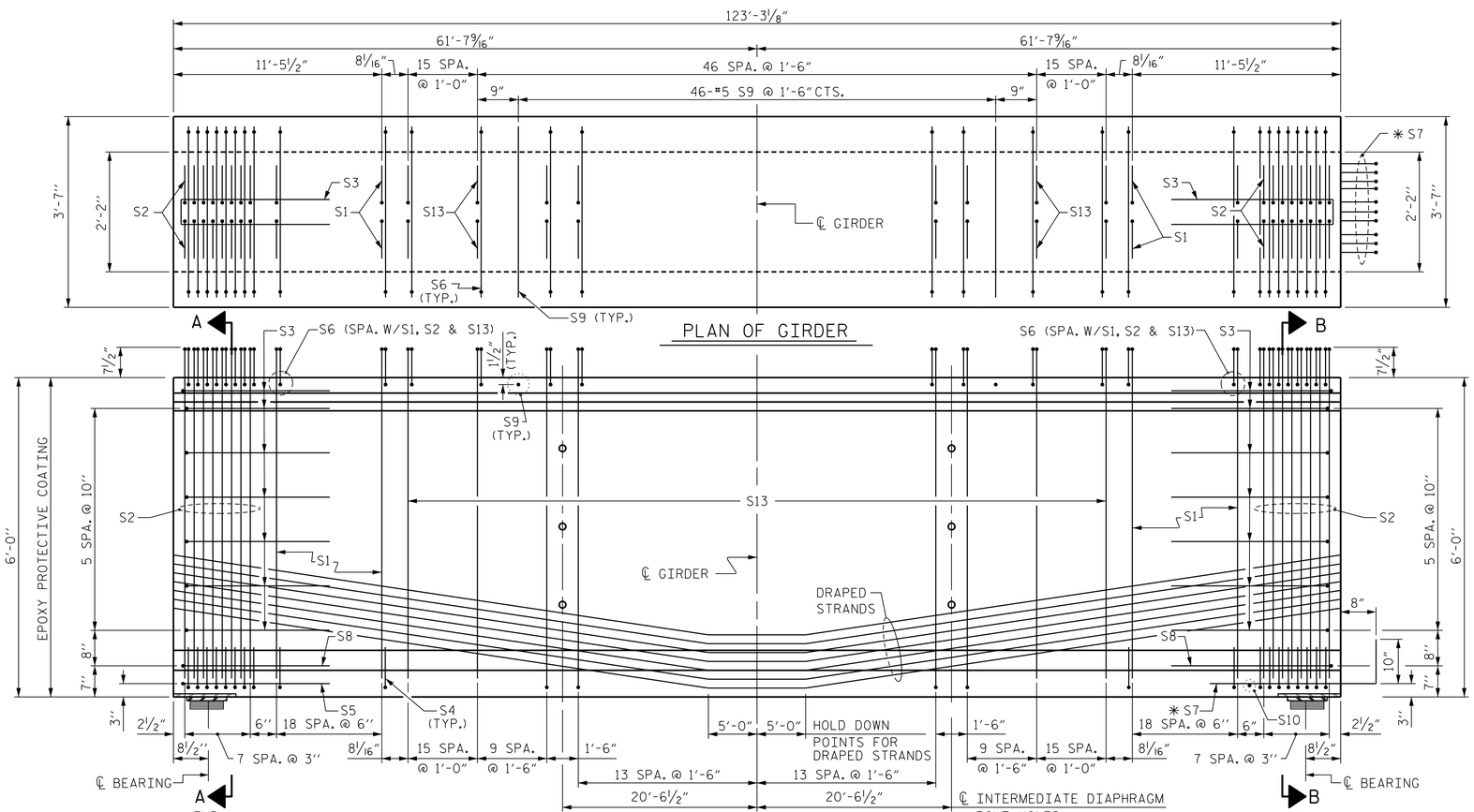

ELEVATION OF GIRDER

PLAN OF GIRDER

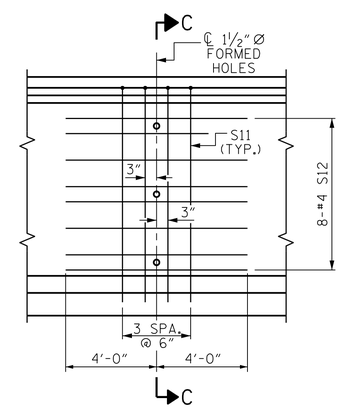

PARTIAL ELEVATION

SHOWING INTERMEDIATE STEEL DIAPHRAGM REINFORCING STEEL FOR GIRDER Nos. 1 - 5.

PROJECT NO. U-2579B

FORSYTH COUNTY

STATION: 52+94.28 -Y4RPBD-

STATE OF NORTH CAROLINA
DEPARTMENT OF TRANSPORTATION
RALEIGH

STANDARD
72" PRESTRESSED CONCRETE MODIFIED BULB TEE CONTINUOUS FOR LIVE LOAD SPAN A

DESIGNED BY: J. BORUTA	DATE : DEC 2013	
DRAWN BY: K. WHITE	DATE : DEC 2013	
CHECKED BY: J. SHERMAN	DATE : APR 2014	
DESIGN ENGINEER OF RECORD: J. DOUGHTY	DATE : MAY 2014	

DRAWN BY : EEM 2/6/97	REV. 5/1/06R	TLA/GM
CHECKED BY : VAP 2/6/97	REV. 10/1/11	MAA/GM
	REV. 6/13	MAA/GM

PARSONS BRINCKERHOFF
434 FAYETTEVILLE STREET
SUITE 1500
RALEIGH, NC 27601
LICENSE NO. F-0165

NORTH CAROLINA PROFESSIONAL SEAL 032967 ENGINEER JASON R. DOUGHTY

DocuSigned by: Jason R Doughty 00F1C86448274F7... 6/2/2014

REVISIONS							SHEET NO.
NO.	BY:	DATE:	NO.	BY:	DATE:		S-600
1			3				TOTAL SHEETS
2			4				707

STR. #16 STD. NO. PCG8

6/2/2014
173498C_SD_CG_1601pcg8_12.dgn