DocuSign Envelope ID: BAB32EDF-465D-49FC-8485-603013883276

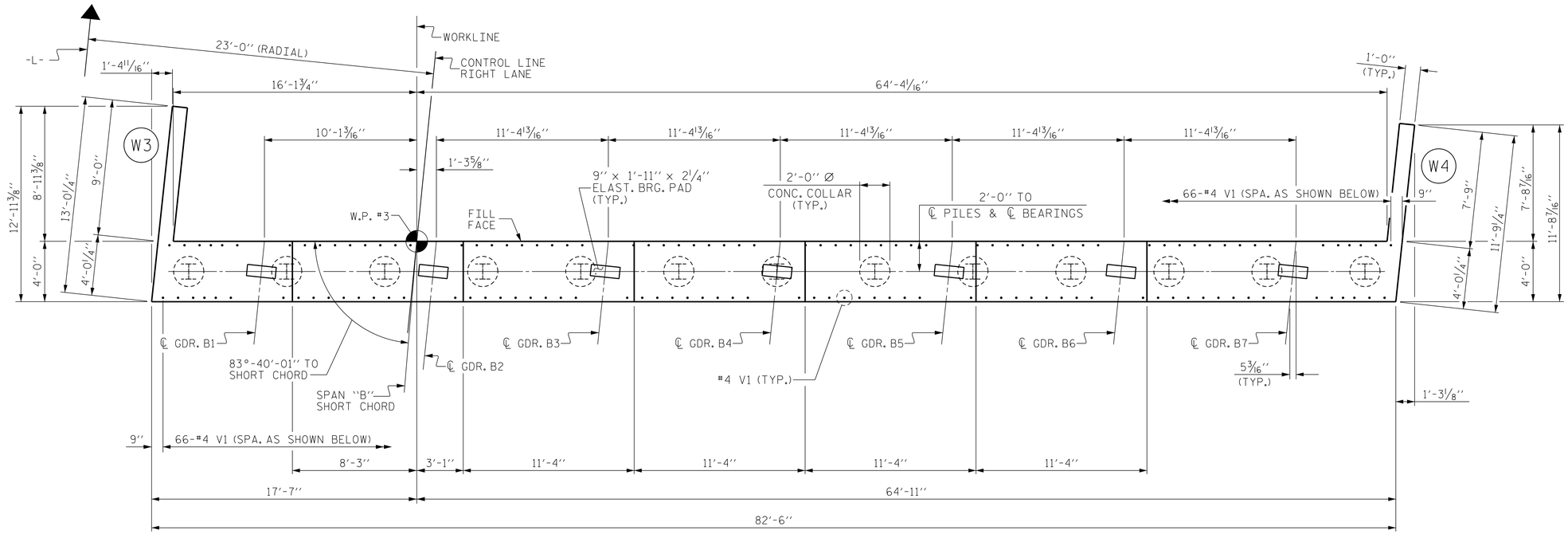

PLAN

(NOTE : ALL GIRDERS ARE PARALLEL TO THE LONG CHORD)

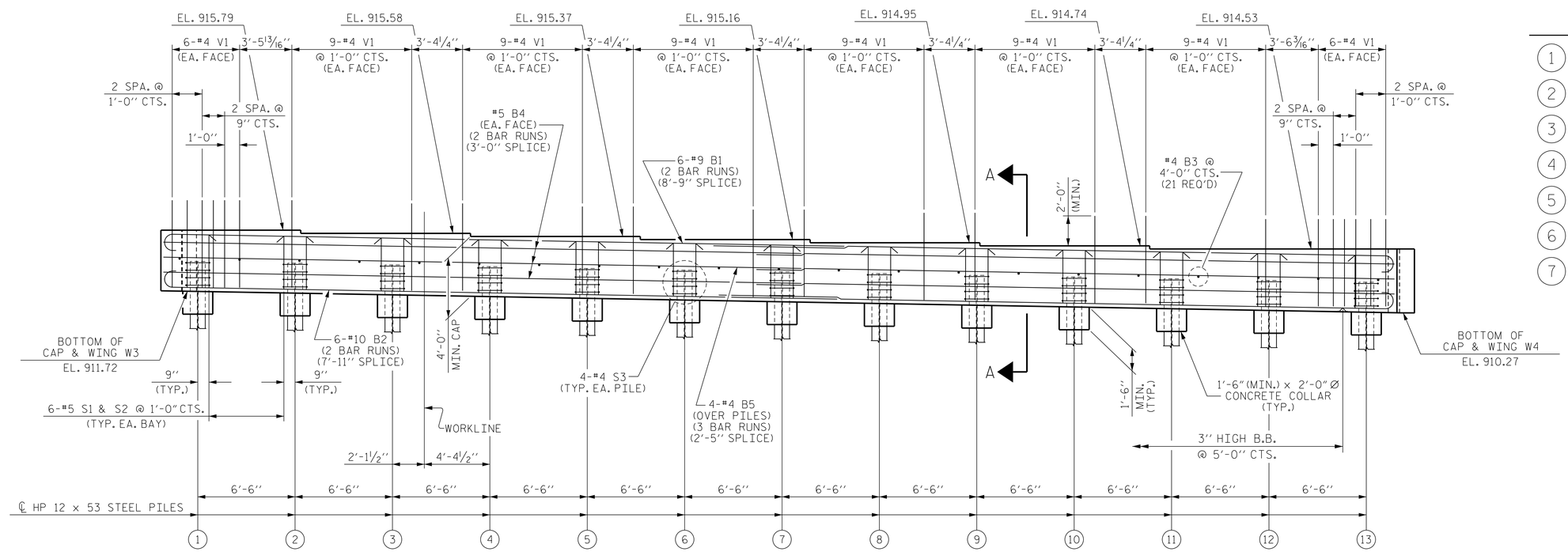

ELEVATION

TOP OF PILE ELEVATIONS

1	EL. 913.71	8	EL. 912.90
2	EL. 913.59	9	EL. 912.78
3	EL. 913.48	10	EL. 912.67
4	EL. 913.36	11	EL. 912.55
5	EL. 913.25	12	EL. 912.44
6	EL. 913.13	13	EL. 912.32
7	EL. 913.01		

PROJECT NO. U-2579B

FORSYTH COUNTY

STATION: 642+81.42 -L-

SHEET 1 OF 3

STATE OF NORTH CAROLINA
DEPARTMENT OF TRANSPORTATION
RALEIGH

SUBSTRUCTURE

INTEGRAL END BENT 2

(RIGHT LANE)

REVISIONS						SHEET NO.
NO.	BY:	DATE:	NO.	BY:	DATE:	S-538
1			3			TOTAL SHEETS
2			4			707

NORTH CAROLINA PROFESSIONAL SEAL 026891 ENGINEER JOHN T. DIFFEE III

WETHERILL ENGINEERING
559 Jones Franklin Rd. Suite 164
Raleigh, N.C. 27606
Bus: 919 851 8077
Fax: 919 851 8107
License: F-0377
TRANSPORTATION PLANNING/DESIGN - BRIDGE/STRUCTURE DESIGN
CIVIL/SITE DESIGN - GIS/GPS - CONSTRUCTION OBSERVATION

DRAWN BY : J.M. BRITT DATE : 3-6-14
CHECKED BY : B.C. HUNT DATE : 4-9-14
DESIGN ENGINEER OF RECORD : T. DIFFEE DATE : 4-15-14

P:\2013\13109.22 U-2579B\Structures\DGN\Str 14 (L-RtLane)U2579B_SD_STR14_EB2_WEI.dgn
6/9/2014 4:21:07 PM