DocuSign Envelope ID: BAB32EDF-465D-49FC-8485-603013883276

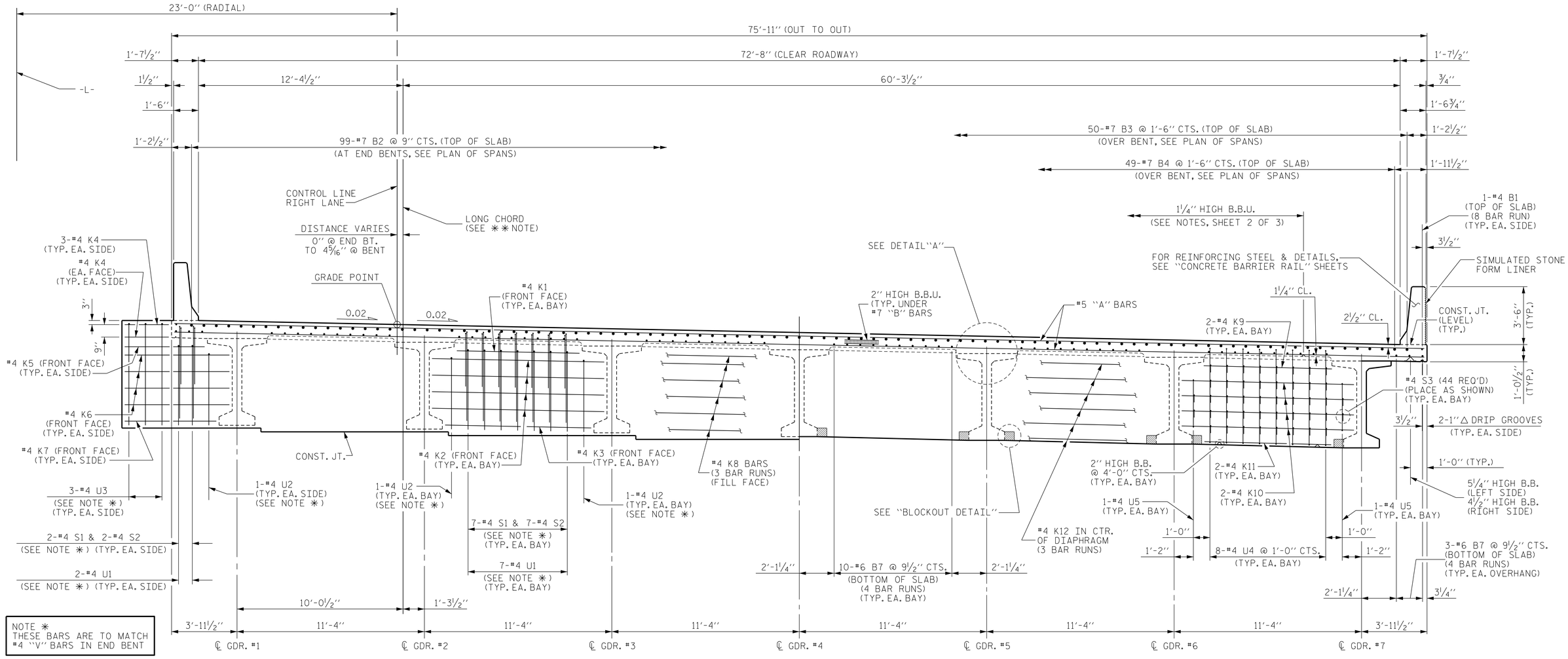

HALF SECTION - INTEGRAL END BENT DIAPHRAGM

HALF SECTION - BENT DIAPHRAGM

TYPICAL SECTION

✱✱ NOTE : GIRDERS AND OUTSIDE EDGES OF SUPERSTRUCTURE ARE PARALLEL TO THE LONG CHORD

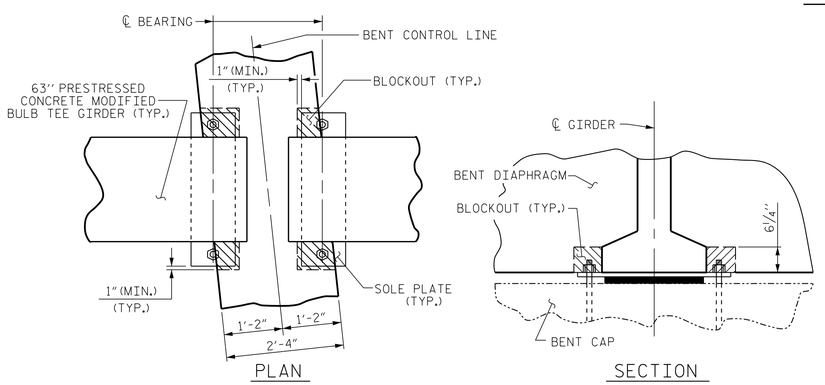

BENT DIAPHRAGM BLOCK-OUT DETAIL

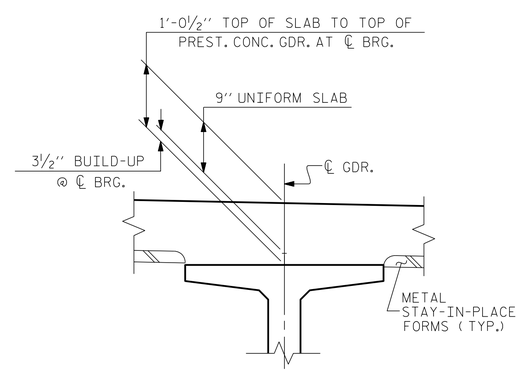

DETAIL "A"

PROJECT NO. U-2579B
FORSYTH COUNTY
STATION: 642+81.42 -L-

SHEET 1 OF 3

STATE OF NORTH CAROLINA
DEPARTMENT OF TRANSPORTATION
RALEIGH

SUPERSTRUCTURE
TYPICAL SECTION
(RIGHT LANE)

REVISIONS						SHEET NO.
NO.	BY:	DATE:	NO.	BY:	DATE:	S-512
1			3			TOTAL SHEETS
2			4			707

NORTH CAROLINA PROFESSIONAL SEAL 026891 ENGINEER JOHN T. DIFFEE III

WETHERILL ENGINEERING
559 Jones Franklin Rd. Suite 164
Raleigh, N.C. 27606
Bus: 919 851 8077
Fax: 919 851 8107
License: F-0377

TRANSPORTATION PLANNING/DESIGN - BRIDGE/STRUCTURE DESIGN
CIVIL/SITE DESIGN - GIS/GPS - CONSTRUCTION OBSERVATION

DRAWN BY :	J.M. BRITT	DATE :	10-9-13
CHECKED BY :	B.C. HUNT	DATE :	4-1-14
DESIGN ENGINEER OF RECORD :	T. DIFFEE	DATE :	4-15-14

P:\2013\13109.22 U-2579B\Structures\DGN\Str 14 (L-RtLane)\U2579B_SD_STR14_TS_WE1.dgn
7/10/2014 1:49:46 PM