DocuSign Envelope ID: BAB32EDF-465D-49FC-8485-603013883276

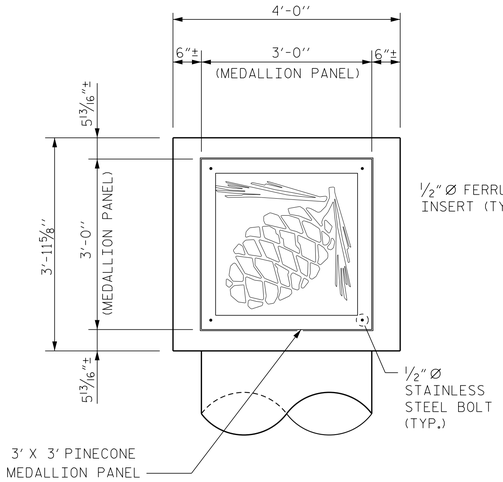

END VIEW

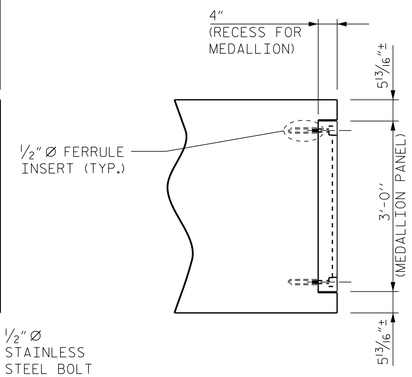

SECTION THRU CAP

ATTACHMENT OF MEDALLION TO BENT

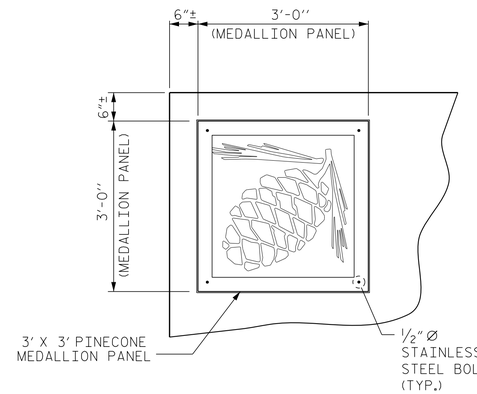

END VIEW

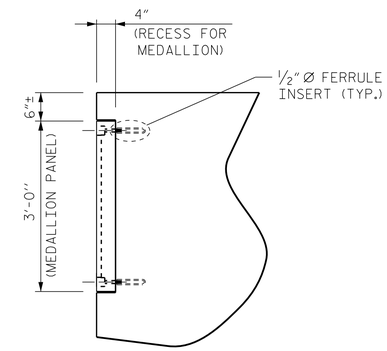

SECTION THRU CAP

ATTACHMENT OF MEDALLION TO WINGWALL

NOTES :

ADJUST DIMENSIONS AS NECESSARY TO CENTER PANEL ON END OF BENT CAP AND ALIGN PANEL WITHIN RECESS.

USE CLASS "A" CONCRETE WITH PEA GRAVEL AGGREGATE IN THE DECORATIVE PANELS. IN ADDITION TO THE #3 REINFORCING BARS, CONCRETE TO BE REINFORCED WITH POLYPROPYLENE FIBERS PER THE MANUFACTURERS' RECOMMENDATIONS.

PREFORMED BEARING PAD SHALL CONFORM TO SECTION 1079-1 OF THE STANDARD SPECIFICATIONS. AT THE CONTRACTOR'S OPTION, AN UNREINFORCED PLAIN ELASTOMERIC PAD MAY BE USED.

FOR STAIN COLORS SEE ARCHITECTURAL CONCRETE SURFACE TREATMENTS SPECIAL PROVISION.

FERRULES SHALL BE MADE FROM ALLOY 304 STAINLESS STEEL AND SHALL HAVE A MINIMUM LENGTH OF THREADS OF 1 1/2" FOR 1/2" DIAMETER FERRULES.

BOLTS SHALL MEET THE REQUIREMENTS OF ASTM F593 ALLOY 304 STAINLESS STEEL WITH MINIMUM 75,000 PSI TENSILE STRENGTH, AND WASHERS SHALL MEET THE REQUIREMENTS OF ASTM F844 EXCEPT THEY SHALL BE MADE FROM ALLOY 304 STAINLESS STEEL.

THE CONTRACTOR MAY USE 1/2" DIAMETER ADHESIVELY ANCHORED THREADED ROD IN PLACE OF THE FERRULE ANCHOR INSERTS. FIELD TESTING OF THE ADHESIVE ANCHORS IS NOT REQUIRED.

WHEN ADHESIVELY ANCHORED THREADED RODS ARE USED, RODS SHALL MEET THE REQUIREMENTS OF ASTM A276, ALLOY 304 STAINLESS STEEL WITH MINIMUM 75,000 PSI TENSILE STRENGTH, NUTS SHALL MEET THE REQUIREMENTS OF ASTM F594 ALLOY 304 STAINLESS STEEL AND WASHERS SHALL MEET THE REQUIREMENTS OF ASTM F844 EXCEPT THEY SHALL BE MADE FROM ALLOY 304 STAINLESS STEEL.

THE COST OF THE ATTACHMENT ANCHORS WITH BOLTS AND WASHER IN PLACE SHALL BE INCLUDED IN THE PRICE BID PER EACH FOR THE CONCRETE MEDALLION PANEL.

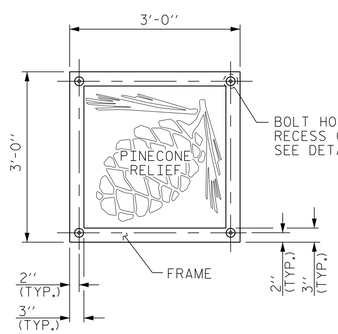

FRONT VIEW

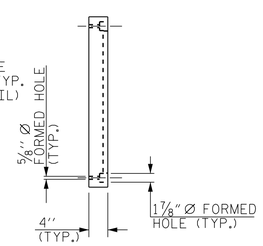

SIDE VIEW

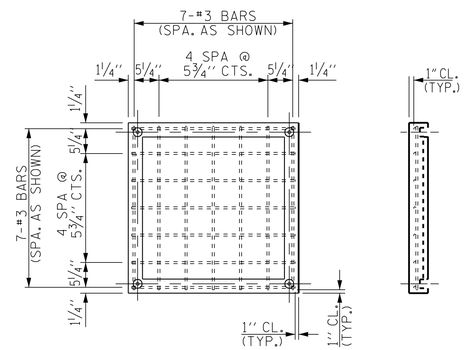

REINFORCING STEEL

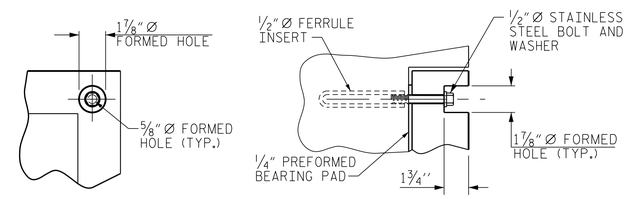

ATTACHMENT DETAILS

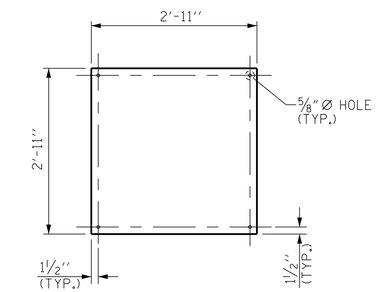

1/4" PREFORMED BEARING PAD

PINE CONE MEDALLION PANEL DETAILS

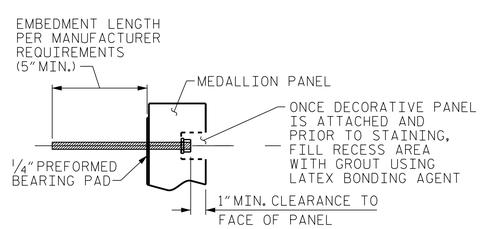

OPTIONAL ATTACHMENT DETAIL

(SEE NOTES)

PROJECT NO. U-2579B
FORSYTH COUNTY
STATION: 642+81.42 -L-

STATE OF NORTH CAROLINA
DEPARTMENT OF TRANSPORTATION
RALEIGH

DECORATIVE PANEL DETAILS

NORTH CAROLINA PROFESSIONAL SEAL 026891 ENGINEER JOHN T. DIFFEE III

WETHERILL ENGINEERING
559 Jones Franklin Rd. Suite 164
Raleigh, N.C. 27606
Bus: 919 851 8077
Fax: 919 851 8107
License: F-0377
TRANSPORTATION PLANNING/DESIGN - BRIDGE/STRUCTURE DESIGN
CIVIL/SITE DESIGN - GIS/GPS - CONSTRUCTION OBSERVATION

REVISIONS						SHEET NO.
NO.	BY:	DATE:	NO.	BY:	DATE:	S-537A
1			3			TOTAL SHEETS
2			4			707

DRAWN BY : T. DIFFEE DATE : 7-8-14
CHECKED BY : G. M. GILLAND DATE : 7-10-14
DESIGN ENGINEER OF RECORD : T. DIFFEE DATE : 7-10-14

P:\2013\13109.22 U-2579B\Structures\DGN\Str 14 (L-RtLane)U2579B_SD_STR14_BT1_WEI.dgn
7/10/2014 2:03:27 PM