DocuSign Envelope ID: DCEEA0B7-39B2-49E8-AC7B-6AF12133FC7D

NOTES :

FOR REINFORCING STEEL IN END OF CAP, SEE VIEW X-X, SHEET 2 OF 2. (TYPICAL FOR EACH END OF CAP)

FOR SECTION A-A, SEE SHEET 2 OF 2.

HOOKS ON "V" BARS MAY BE TURNED AS NECESSARY FOR PLACING REINFORCING STEEL.

STIRRUPS & U1 BARS IN CAP MAY BE SHIFTED AS NECESSARY TO CLEAR ANCHOR BOLTS.

FOR PILE SPLICE DETAILS, SEE INTEGRAL END BENT 1, SHEET 2 OF 3.

FOR CONCRETE MEDALLION PANEL, SEE SPECIAL PROVISION FOR CONCRETE MEDALLION PANEL. VECTOR FILE FOR PINECONE MEDALLION WILL BE PROVIDED TO CONTRACTOR.

STAIN EXPOSED PART OF COLUMNS AS WELL AS BOTTOM AND SIDES OF BENT CAP IN ACCORDANCE WITH ARCHITECTURAL CONCRETE SURFACE TREATMENTS SPECIAL PROVISION.

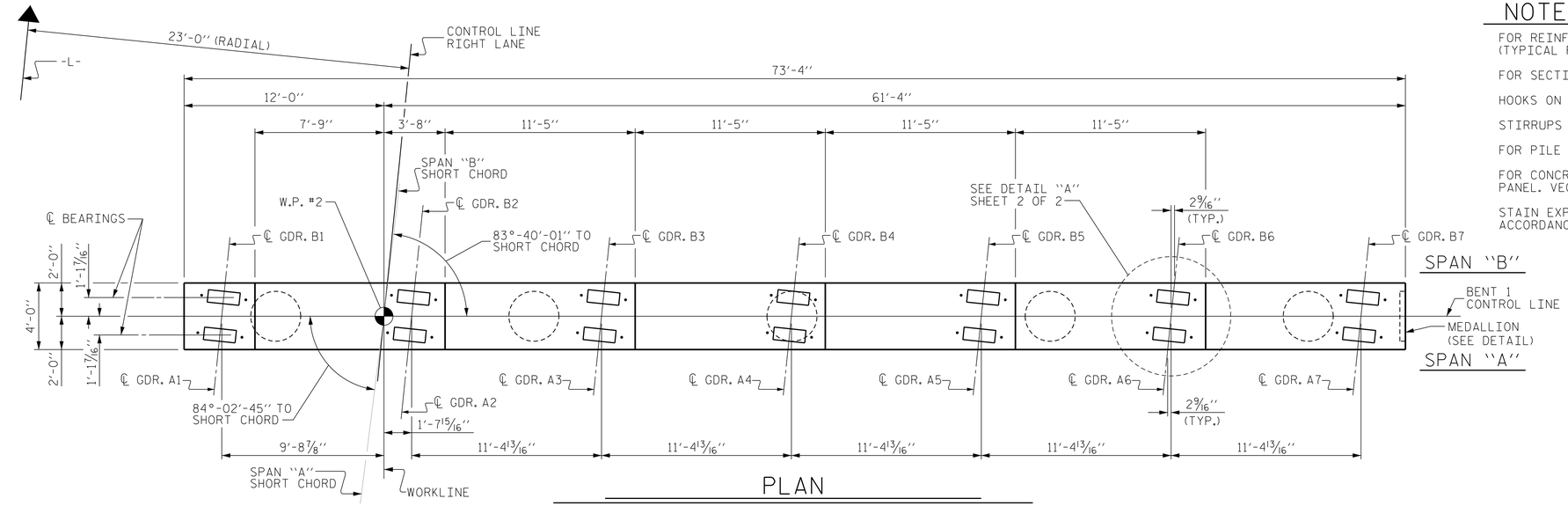

PLAN

(NOTE : ALL GIRDERS ARE PARALLEL TO THE LONG CHORD)

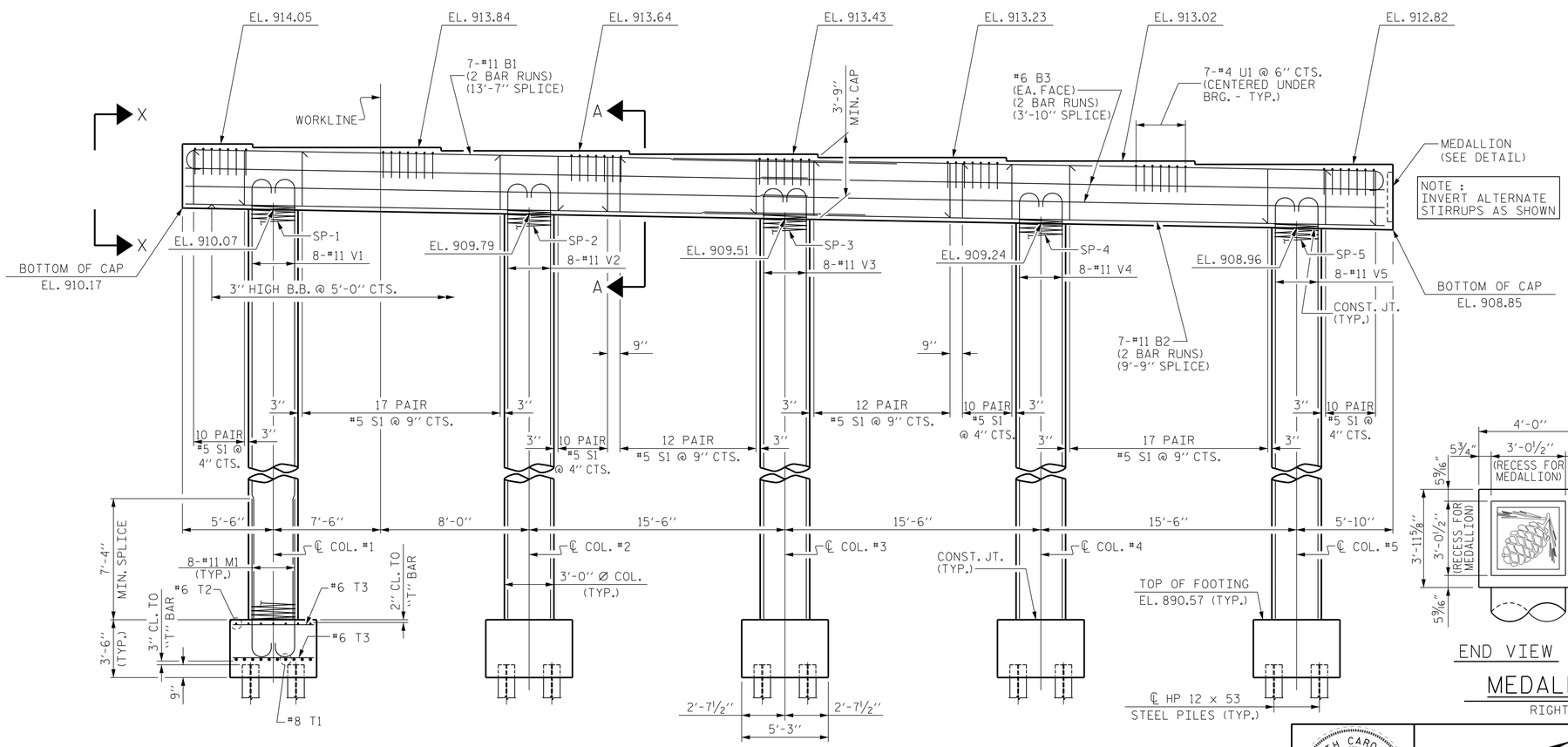

ELEVATION

DIMENSIONS AND REINFORCING STEEL ARE TYPICAL FOR EACH FOOTING

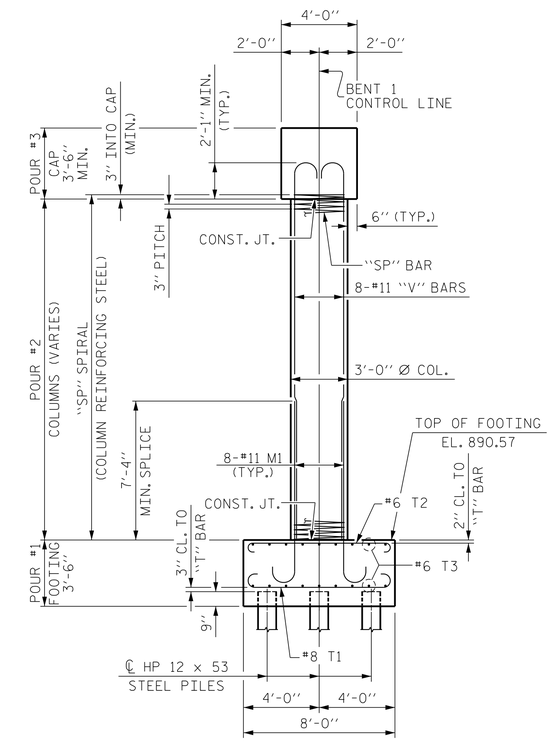

END ELEVATION

DIMENSIONS AND REINFORCING STEEL ARE TYPICAL FOR EACH FOOTING

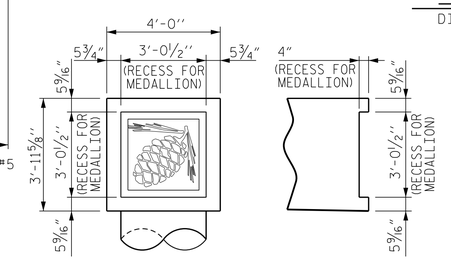

END VIEW SECTION THRU CAP

MEDALLION DETAIL

RIGHT END OF BENT CAP

PROJECT NO. U-2579B

FORSYTH COUNTY

STATION: 642+81.42 -L-

SHEET 1 OF 2

STATE OF NORTH CAROLINA
DEPARTMENT OF TRANSPORTATION
RALEIGH

SUBSTRUCTURE

BENT 1

(RIGHT LANE)

REVISIONS						SHEET NO.
NO.	BY:	DATE:	NO.	BY:	DATE:	S-536
1			3			TOTAL SHEETS
2			4			707

NORTH CAROLINA PROFESSIONAL SEAL 026891 ENGINEER JOHN T. DIFFEE III

WETHERILL ENGINEERING
559 Jones Franklin Rd. Suite 164
Raleigh, N.C. 27606
Bus: 919 851 8077
Fax: 919 851 8107
License: F-0377

TRANSPORTATION PLANNING/DESIGN - BRIDGE/STRUCTURE DESIGN
CIVIL/SITE DESIGN - GIS/GPS - CONSTRUCTION OBSERVATION

DRAWN BY :	J.M. BRITT	DATE :	3-27-14
CHECKED BY :	B.C. HUNT	DATE :	4-15-14
DESIGN ENGINEER OF RECORD :	T. DIFFEE	DATE :	4-15-14

P:\2013\13109.22 U-2579B\Structures\DGN\Str 14 (L-RtLane)\U2579B_SD_STR14_BT1_WE1.dgn
8/11/2014 7:59:13 AM