DocuSign Envelope ID: BAB32EDF-465D-49FC-8485-603013883276

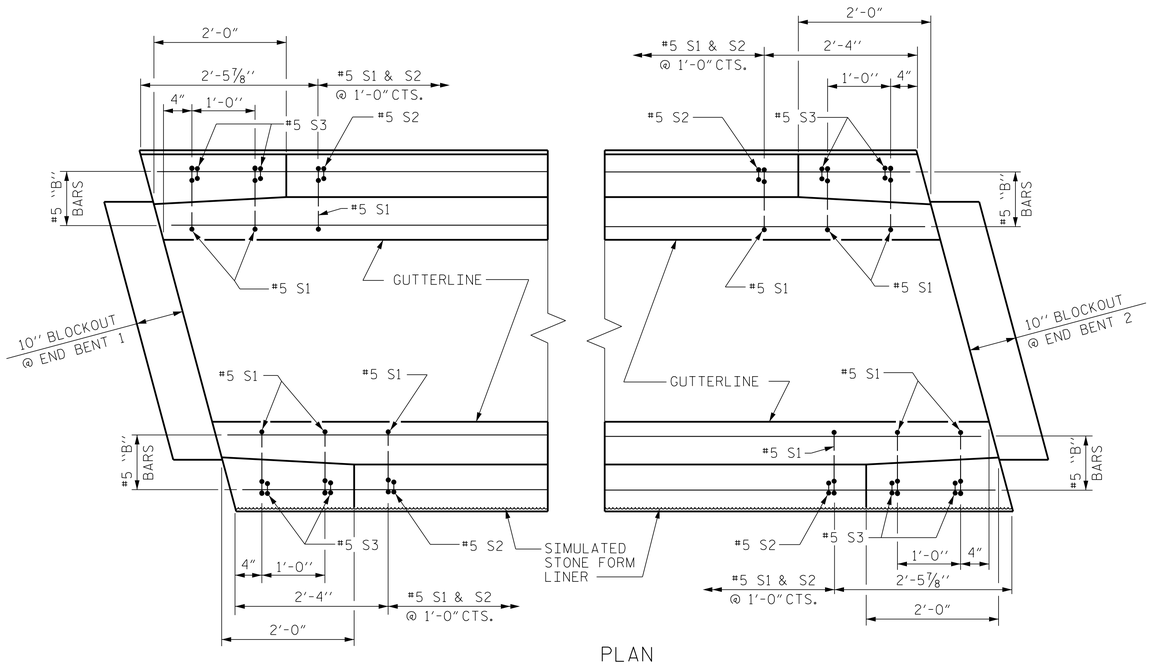

PLAN

NOTES

THE BARRIER RAIL IN EACH CONTINUOUS UNIT SHALL NOT BE CAST UNTIL ALL SLAB CONCRETE IN THAT UNIT HAS BEEN CAST AND HAS REACHED A MINIMUM COMPRESSIVE STRENGTH OF 3,000 PSI.

ALL REINFORCING STEEL IN BARRIER RAILS SHALL BE EPOXY COATED.

GROOVED CONTRACTION JOINTS, 1/2" IN DEPTH, SHALL BE TOOLED IN ALL EXPOSED FACES OF THE BARRIER RAIL AND IN ACCORDANCE WITH ARTICLE 825-10(B) OF THE STANDARD SPECIFICATIONS. THE CONTRACTION JOINT SHALL BE LOCATED AT EACH THIRD POINT BETWEEN BARRIER RAIL EXPANSION JOINTS. ONLY ONE CONTRACTION JOINT IS REQUIRED AT MIDPOINT OF BARRIER RAIL SEGMENTS LESS THAN 20 FEET IN LENGTH AND NO CONTRACTION JOINTS ARE REQUIRED FOR THOSE SEGMENTS LESS THAN 10 FEET IN LENGTH.

THE #5 S1 AND S2 BARS MAY BE SHIFTED SLIGHTY IN ORDER TO MAINTAIN A 2" MINIMUM CLEARANCE TO THE 1/2" EXPANSION JOINT MATERIAL IN THE RAIL.

FOR ARCHITECTURAL CONCRETE SURFACE TREATMENT, SEE SPECIAL PROVISIONS.

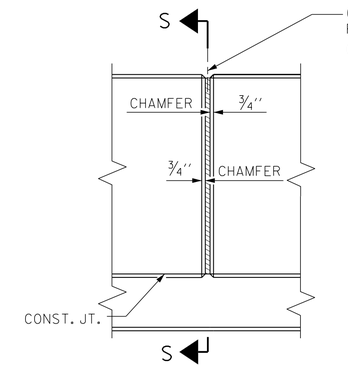

ELEVATION AT EXPANSION JOINTS

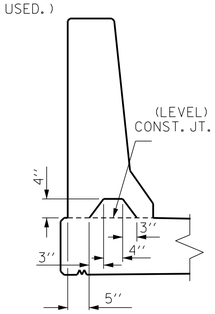

SECTION S-S

AT DAM IN OPEN JOINT
(THIS IS TO BE USED ONLY
WHEN SLIP FORM IS USED)

BAR TYPES

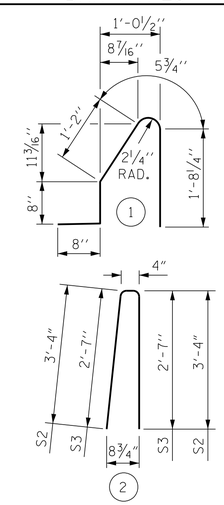

ALL BAR DIMENSIONS ARE OUT TO OUT

BILL OF MATERIAL

FOR CONCRETE BARRIER RAIL ONLY

BAR	No.	SIZE	TYPE	LENGTH	WEIGHT
* B1	66	#5	STR.	27'-7"	1899
* B2	44	#5	STR.	15'-2"	696
* B3	66	#5	STR.	25'-7"	1761
* B4	44	#5	STR.	14'-6"	665
* S1	430	#5	1	4'-8"	2093
* S2	422	#5	2	7'-0"	3081
* S3	8	#5	2	5'-6"	46

* EPOXY COATED REINFORCING STEEL	10,241 LBS.
CLASS AA CONCRETE	60.0 CU. YDS.
CONCRETE SIMULATED STONE FORM LINER	748.6 SQ. FT.
CONCRETE BARRIER RAIL	429.65 LIN. FT.

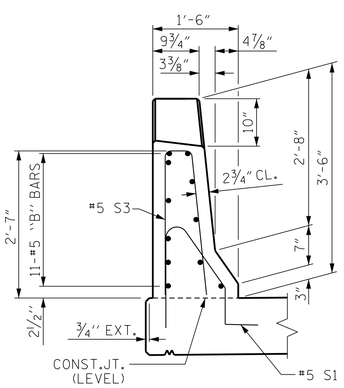

LEFT RAIL - END VIEW

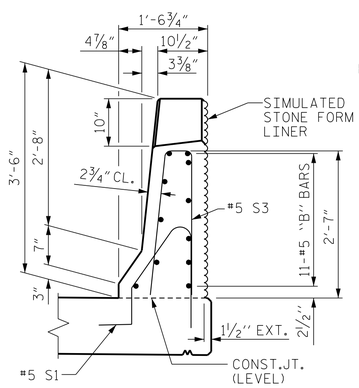

RIGHT RAIL - END VIEW

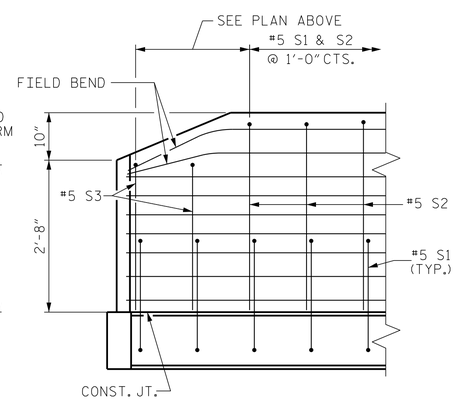

SIDE VIEW

END OF RAIL DETAILS

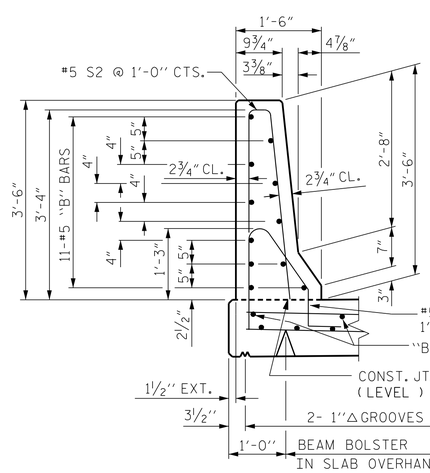

SECTION THRU LEFT RAIL

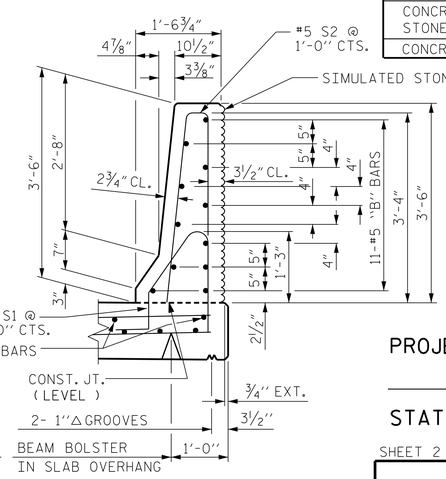

SECTION THRU RIGHT RAIL

BARRIER RAIL DETAILS

PROJECT NO. U-2579B
FORSYTH COUNTY
STATION: 642+81.42 -L-

SHEET 2 OF 2

STATE OF NORTH CAROLINA
DEPARTMENT OF TRANSPORTATION
RALEIGH

SUPERSTRUCTURE
CONCRETE
BARRIER RAIL
(RIGHT LANE)

NORTH CAROLINA PROFESSIONAL SEAL 026891 ENGINEER JOHN T. DIFFEE III

WETHERILL ENGINEERING
559 Jones Franklin Rd. Suite 164
Raleigh, N.C. 27606
Bus: 919 851 8077
Fax: 919 851 8107
License: F-0377

TRANSPORTATION PLANNING/DESIGN - BRIDGE/STRUCTURE DESIGN
CIVIL/SITE DESIGN - GIS/GPS - CONSTRUCTION OBSERVATION

REVISIONS						SHEET NO.
NO.	BY:	DATE:	NO.	BY:	DATE:	S-529
1			3			TOTAL SHEETS
2			4			707

DRAWN BY : J.M. BRITT DATE : 9-3-13
CHECKED BY : B.C. HUNT DATE : 4-1-14
DESIGN ENGINEER OF RECORD : T. DIFFEE DATE : 4-15-14

P:\2013\13109.22 U-2579B\Structures\DGN\Str 14 (L-RtLane)U2579B_SD_STR14_BR_WE1.dgn
7/10/2014 1:54:50 PM