DocuSign Envelope ID: BAB32EDF-465D-49FC-8485-603013883276

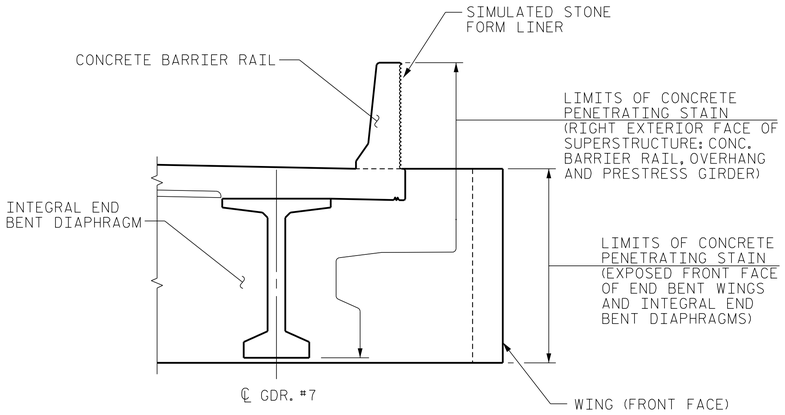

CONCRETE STAINING DETAIL - SUPERSTRUCTURE

SEE SPECIAL PROVISION FOR ARCHITECTURAL CONCRETE SURFACE TREATMENTS.

CONCRETE STAINING SUPERSTRUCTURE		
BARRIER RAIL	748.6	SQ.FT.
DECK OVERHANG	762.1	SQ.FT.
PRESTRESS GIRDER	1,495.7	SQ.FT.
END BENT 1: SUPERSTRUCTURE	566.6	SQ.FT.
END BENT 2: SUPERSTRUCTURE	559.0	SQ.FT.
TOTAL	4,132.0	SQ.FT.

REINFORCING BAR SCHEDULE

SPAN "A-B"

BAR	No.	SIZE	TYPE	LENGTH	WEIGHT
✱A1	387	#5	STR	44'-9"	18063
✱A2	389	#5	STR	33'-5"	13558
A3	776	#5	STR	38'-11"	31498
✱A101	1	#5	STR	42'-10"	45
✱A102	1	#5	STR	37'-9"	39
✱A103	1	#5	STR	32'-8"	34
✱A104	1	#5	STR	27'-7"	29
✱A105	1	#5	STR	22'-6"	23
✱A106	1	#5	STR	17'-5"	18
✱A107	1	#5	STR	12'-5"	13
✱A108	1	#5	STR	7'-4"	8
✱A109	1	#5	STR	2'-3"	2
✱A110	1	#5	STR	42'-3"	44
✱A111	1	#5	STR	37'-2"	39
✱A112	1	#5	STR	32'-2"	34
✱A113	1	#5	STR	27'-1"	28
✱A114	1	#5	STR	22'-0"	23
✱A115	1	#5	STR	16'-11"	18
✱A116	1	#5	STR	11'-10"	12
✱A117	1	#5	STR	6'-9"	7
✱A201	1	#5	STR	31'-0"	32
✱A202	1	#5	STR	25'-11"	27
✱A203	1	#5	STR	20'-10"	22
✱A204	1	#5	STR	15'-10"	17
✱A205	1	#5	STR	10'-9"	11
✱A206	1	#5	STR	5'-8"	6
✱A207	1	#5	STR	32'-7"	34
✱A208	1	#5	STR	27'-6"	29
✱A209	1	#5	STR	22'-5"	23
✱A210	1	#5	STR	17'-4"	18
✱A211	1	#5	STR	12'-4"	13
✱A212	1	#5	STR	7'-3"	8
✱A213	1	#5	STR	2'-2"	2
A301	2	#5	STR	37'-8"	79
A302	2	#5	STR	32'-7"	68
A303	2	#5	STR	27'-6"	57
A304	2	#5	STR	22'-5"	47
A305	2	#5	STR	17'-4"	36
A306	2	#5	STR	12'-4"	26
A307	2	#5	STR	7'-3"	15
A308	2	#5	STR	2'-2"	5
A309	2	#5	STR	36'-5"	76
A310	2	#5	STR	31'-4"	65
A311	2	#5	STR	26'-4"	55
A312	2	#5	STR	21'-3"	44
A313	2	#5	STR	16'-2"	34
A314	2	#5	STR	11'-1"	23
A315	2	#5	STR	6'-0"	13

BAR	No.	SIZE	TYPE	LENGTH	WEIGHT
✱B1	16	#4	STR	28'-7"	305
✱B2	198	#7	STR	24'-10"	10050
✱B3	150	#7	STR	30'-2"	9249
✱B4	49	#7	STR	35'-0"	3505
✱B5	100	#4	STR	26'-1"	1742
✱B6	100	#4	STR	22'-4"	1492
B7	264	#6	STR	55'-11"	22173
H1	7	#5	6	13'-1"	96
H2	7	#5	6	13'-0"	95
H3	7	#5	7	11'-5"	83
H4	4	#5	7	11'-6"	48
H5	7	#5	7	13'-5"	98
H6	7	#5	7	13'-6"	99
H7	7	#5	6	12'-4"	90
H8	4	#5	6	12'-3"	51
H9	3	#5	7	8'-0"	25
H10	3	#5	6	8'-9"	27
K1	12	#4	STR	7'-5"	59
K2	48	#4	STR	10'-5"	334
K3	12	#4	STR	8'-10"	71
K4	20	#4	STR	2'-8"	36
K5	4	#4	STR	4'-10"	13
K6	16	#4	STR	6'-4"	68
K7	4	#4	STR	5'-6"	15
K8	36	#4	STR	28'-6"	685
K9	12	#4	STR	7'-9"	62
K10	48	#4	STR	10'-5"	334
K11	12	#4	STR	7'-8"	61
K12	18	#4	STR	24'-0"	289
✱S1	92	#4	1	11'-6"	707
✱S2	92	#4	1	11'-9"	722
S3	264	#4	5	2'-9"	485
U1	92	#4	2	12'-8"	778
U2	28	#4	2	11'-8"	218
U3	12	#4	2	15'-6"	124
✱U4	48	#4	4	16'-6"	529
U5	12	#4	3	8'-3"	66

REINFORCING STEEL 58,724 LBS.

✱ EPOXY COATED REINFORCING STEEL 60,580 LBS.

✱ THESE BARS ARE EPOXY COATED

BAR TYPES

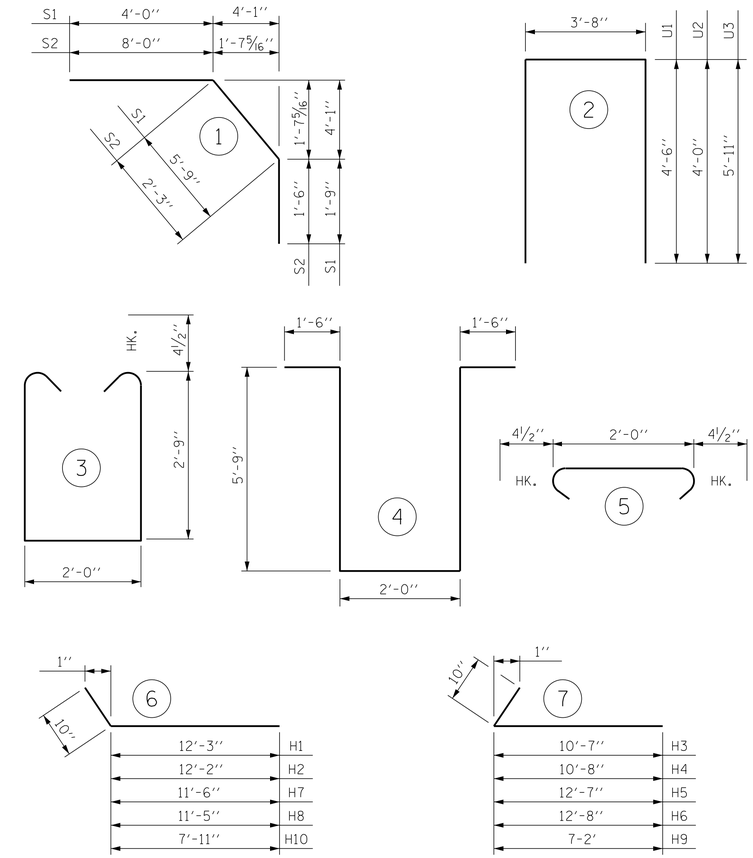

ALL BAR DIMENSIONS ARE OUT TO OUT

SUPERSTRUCTURE REINFORCING STEEL LENGTHS ARE BASED ON THE FOLLOWING MINIMUM SPLICE LENGTHS					
BAR SIZE	SUPERSTRUCTURE EXCEPT APPROACH SLABS, PARAPET, AND BARRIER RAIL		APPROACH SLABS		PARAPET AND BARRIER RAIL
	EPOXY COATED	UNCOATED	EPOXY COATED	UNCOATED	
#4	2'-0"	1'-9"	2'-0"	1'-9"	2'-9"
#5	2'-6"	2'-2"	2'-6"	2'-2"	3'-5"
#6	3'-0"	2'-7"	3'-10"	2'-7"	4'-4"
#7	5'-3"	3'-6"			
#8	6'-10"	4'-7"			

SUPERSTRUCTURE BILL OF MATERIAL

(RIGHT LANE)	CLASS AA CONCRETE	REINFORCING STEEL	EPOXY COATED REINFORCING STEEL
	(CU. YDS.)	(LBS.)	(LBS.)
SPAN "A-B"	719.4	58,724	60,580
TOTALS ✱✱	719.4	58,724	60,580

✱✱ QUANTITIES FOR BARRIER RAIL ARE NOT INCLUDED

SEE "CONCRETE DECK POUR DETAIL" SHEET FOR CLASS AA CONCRETE BREAKDOWN.

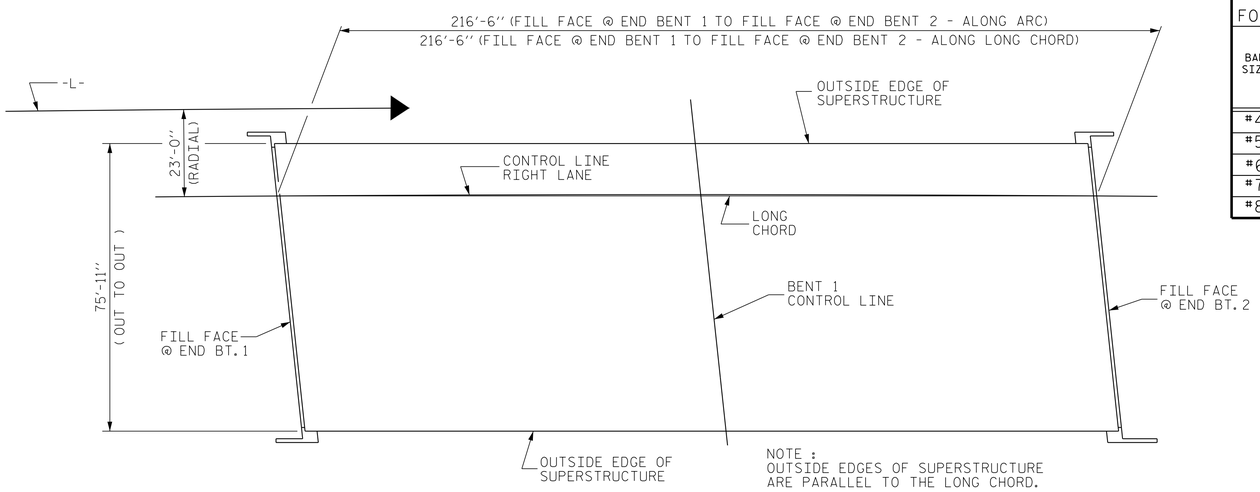

NOTE :
OUTSIDE EDGES OF SUPERSTRUCTURE ARE PARALLEL TO THE LONG CHORD.

LAYOUT FOR COMPUTING AREA REINFORCED CONCRETE DECK SLAB

(SQ. FT. = 16,436)

GROOVING BRIDGE FLOORS		
APPROACH SLABS	3,942	SQ.FT.
BRIDGE DECK	14,966	SQ.FT.
TOTAL	18,908	SQ.FT.

PROJECT NO. U-2579B
FORSYTH COUNTY
STATION: 642+81.42 -L-

STATE OF NORTH CAROLINA
DEPARTMENT OF TRANSPORTATION
RALEIGH

SUPERSTRUCTURE
BILL OF MATERIAL
(RIGHT LANE)

NORTH CAROLINA PROFESSIONAL SEAL 026891 ENGINEER JOHN T. DIFFEE III

WETHERILL ENGINEERING
559 Jones Franklin Rd. Suite 164
Raleigh, N.C. 27606
Bus: 919 851 8077
Fax: 919 851 8107
License: F-0377
TRANSPORTATION PLANNING/DESIGN - BRIDGE/STRUCTURE DESIGN
CIVIL/SITE DESIGN - GIS/GPS - CONSTRUCTION OBSERVATION

REVISIONS							SHEET NO.
NO.	BY:	DATE:	NO.	BY:	DATE:		S-532
1			3				TOTAL SHEETS
2			4				707

DRAWN BY : J.M. BRITT DATE : 1-30-14
CHECKED BY : B.C. HUNT DATE : 4-1-14
DESIGN ENGINEER OF RECORD : T. DIFFEE DATE : 4-15-14

P:\2013\13109.22 U-2579B\Structures\DGN\Str 14 (LRtLane)\U2579B_SD_STR14_BM_WE1.dgn
7/10/2014 1:46:31 PM