DocuSign Envelope ID: BAB32EDF-465D-49FC-8485-603013883276

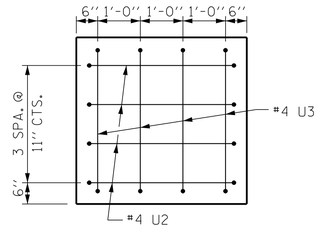

VIEW X-X

("U" BARS TYPICAL EACH END)

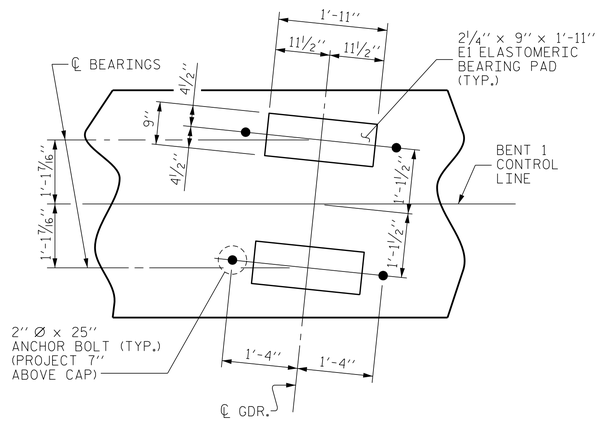

DETAIL "A"

NOTE :
ALL GIRDERS ARE PARALLEL TO THE LONG CHORD

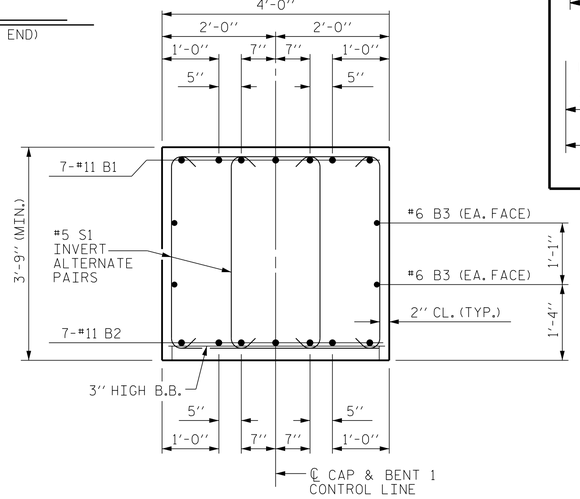

SECTION A-A

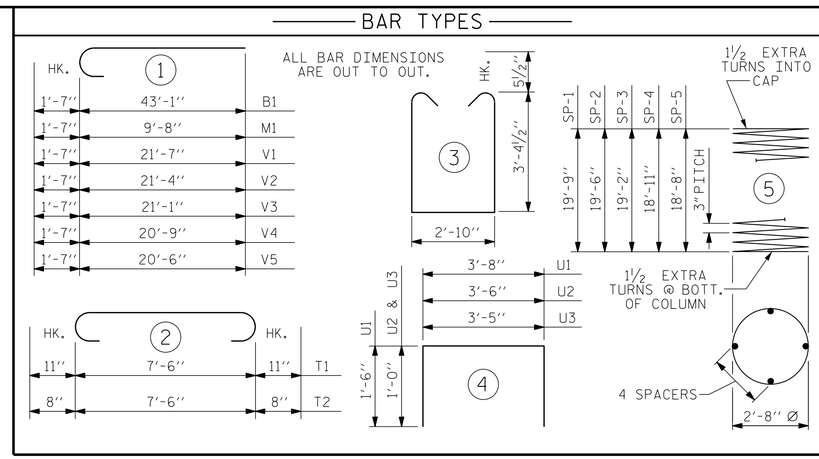

BILL OF MATERIAL

BENT 1

BAR	No.	SIZE	TYPE	LENGTH	WEIGHT
B1	14	#11	1	44'-8"	3321
B2	14	#11	STR	41'-3"	3067
B3	8	#6	STR	38'-3"	460
M1	40	#11	1	11'-3"	2390
S1	196	#5	3	10'-6"	2146
U1	49	#4	4	6'-8"	218
U2	8	#4	4	5'-6"	29
U3	8	#4	4	5'-5"	29
T1	50	#8	2	9'-4"	1246
T2	35	#6	2	8'-10"	464
T3	90	#6	STR	4'-11"	665
V1	8	#11	1	23'-2"	985
V2	8	#11	1	22'-11"	974
V3	8	#11	1	22'-8"	963
V4	8	#11	1	22'-4"	949
V5	8	#11	1	22'-1"	939
REINFORCING STEEL					18,845 LBS.

SP-1	1	*	5	676'-8"	452
SP-2	1	*	5	668'-4"	446
SP-3	1	*	5	657'-4"	439
SP-4	1	*	5	649'-2"	434
SP-5	1	*	5	640'-10"	428
SPIRAL COLUMN REINFORCING STEEL					2,199 LBS.

* "SP" SPIRAL REINFORCING STEEL SHALL BE W20 OR D-20 COLD DRAWN WIRE OR #4 PLAIN OR DEFORMED BAR

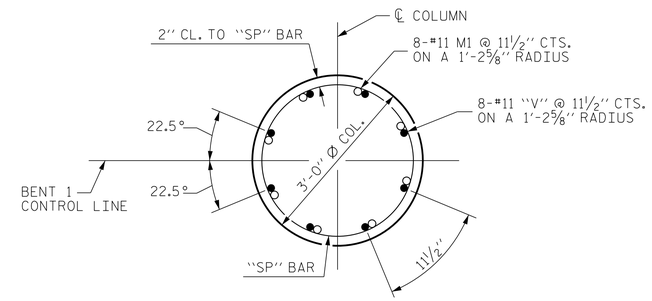

SECTION THRU COLUMN

(TYPICAL FOR EACH COLUMN)

CLASS A CONCRETE BREAKDOWN

POUR #1 (FOOTINGS)	27.2 CU. YDS.
POUR #2 (COLUMNS)	24.8 CU. YDS.
POUR #3 (CAP)	41.7 CU. YDS.
TOTAL CLASS A CONCRETE	93.7 CU. YDS.

HP 12 x 53 STEEL PILES

No. 30	480 LIN. FT.
STEEL PILE POINTS	12 EACH
PDA TESTING	1 EACH
PILE EXCAVATION IN SOIL	64 LIN. FT.
PILE EXCAVATION NOT IN SOIL	78 LIN. FT.
FOUNDATION EXCAVATION	LUMP SUM
CONCRETE MEDALLION PANEL	1 EACH
CONCRETE STAINING	1,663.1 SQ. FT.

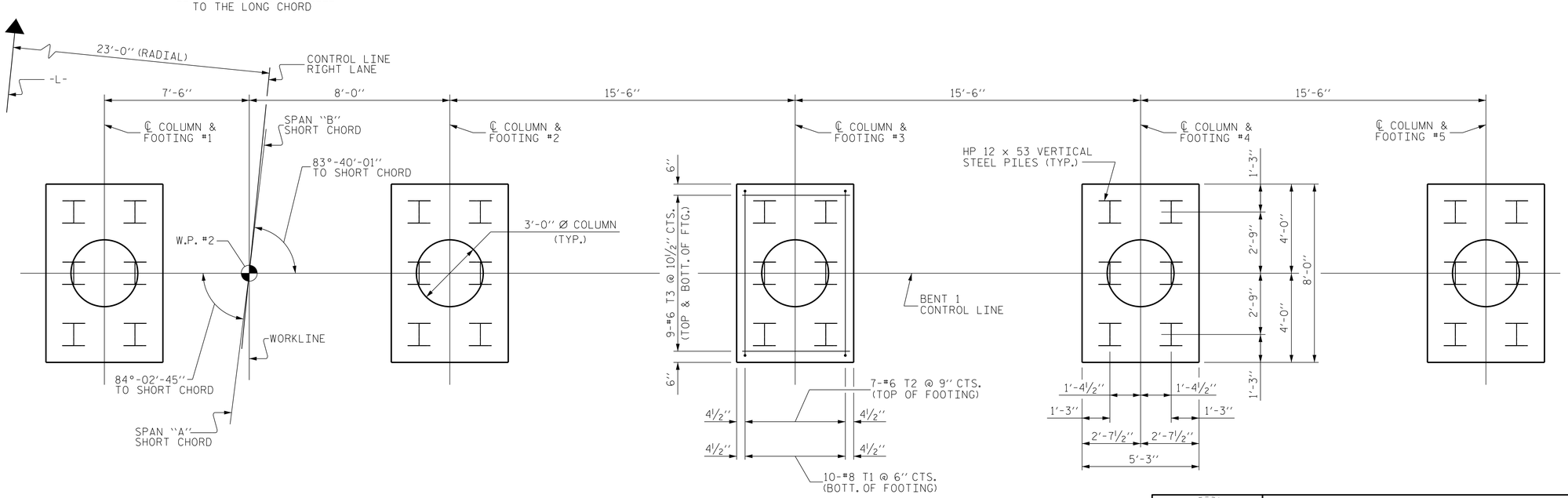

PLAN OF FOOTINGS

DIMENSIONS, REINFORCING STEEL AND PILE LAYOUT ARE TYPICAL FOR EACH FOOTING

PROJECT NO. U-2579B
FORSYTH COUNTY
STATION: 642+81.42 -L-

SHEET 2 OF 2

STATE OF NORTH CAROLINA
DEPARTMENT OF TRANSPORTATION
RALEIGH

SUBSTRUCTURE

BENT 1

(RIGHT LANE)

NORTH CAROLINA PROFESSIONAL SEAL 026891 ENGINEER JOHN T. DIFFEE III

WETHERILL ENGINEERING
559 Jones Franklin Rd. Suite 164
Raleigh, N.C. 27606
Bus: 919 851 8077
Fax: 919 851 8107
License: F-0377

TRANSPORTATION PLANNING/DESIGN - BRIDGE/STRUCTURE DESIGN
CIVIL/SITE DESIGN - GIS/GPS - CONSTRUCTION OBSERVATION

REVISIONS						SHEET NO.
NO.	BY:	DATE:	NO.	BY:	DATE:	S-537
1			3			TOTAL SHEETS
2			4			707

DRAWN BY : J.M. BRITT DATE : 3-27-14
CHECKED BY : B.C. HUNT DATE : 4-14-14
DESIGN ENGINEER OF RECORD : T. DIFFEE DATE : 4-15-14

P:\2013\13109.22 U-2579B\Structures\DGN\Sr 14 (L-RtLane)\U2579B_SD_STR14_BT1_WEI.dgn
7/10/2014 2:02:18 PM