DocuSign Envelope ID: BAB32EDF-465D-49FC-8485-603013883276

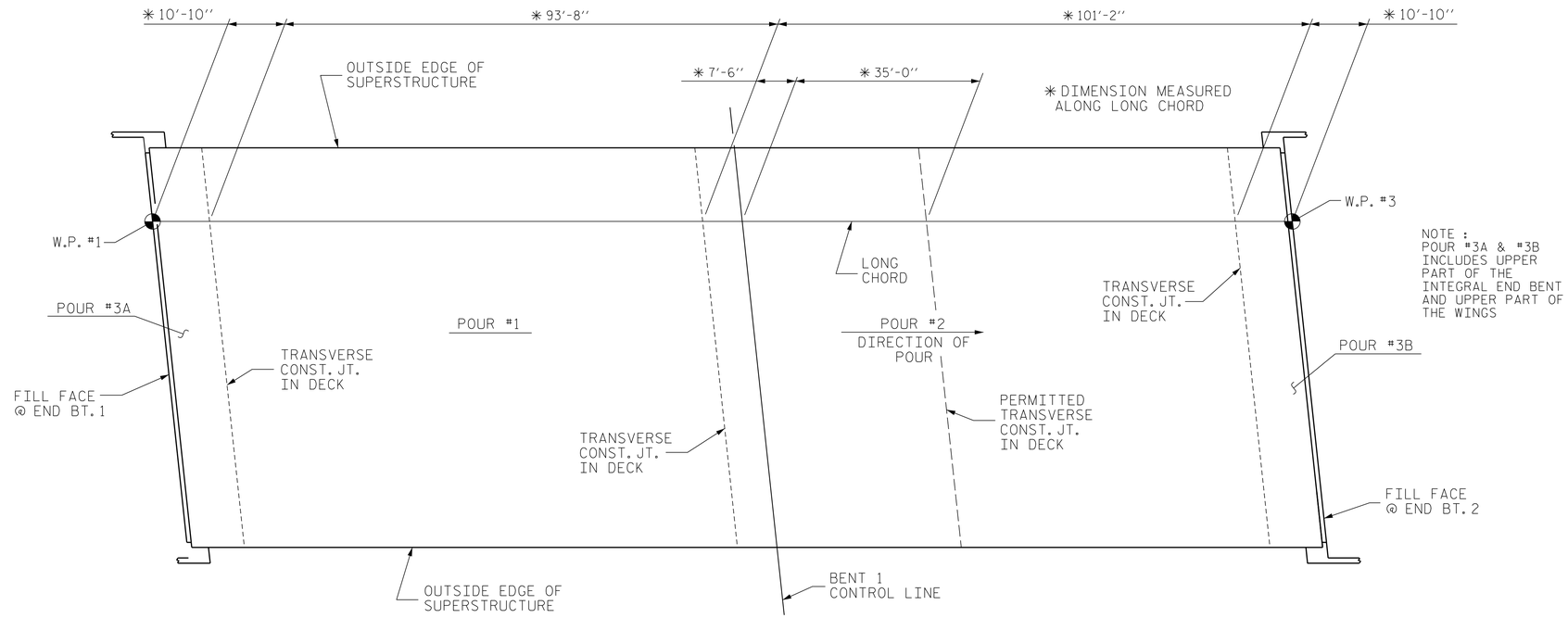

CONCRETE DECK POUR DETAIL

CLASS AA CONCRETE BREAKDOWN		
POUR #1	240.7	CY
POUR #2	290.1	CY
POUR #3A	94.0	CY
POUR #3B	94.0	CY
CLASS AA CONCRETE BREAKDOWN TOTAL	718.8	CY

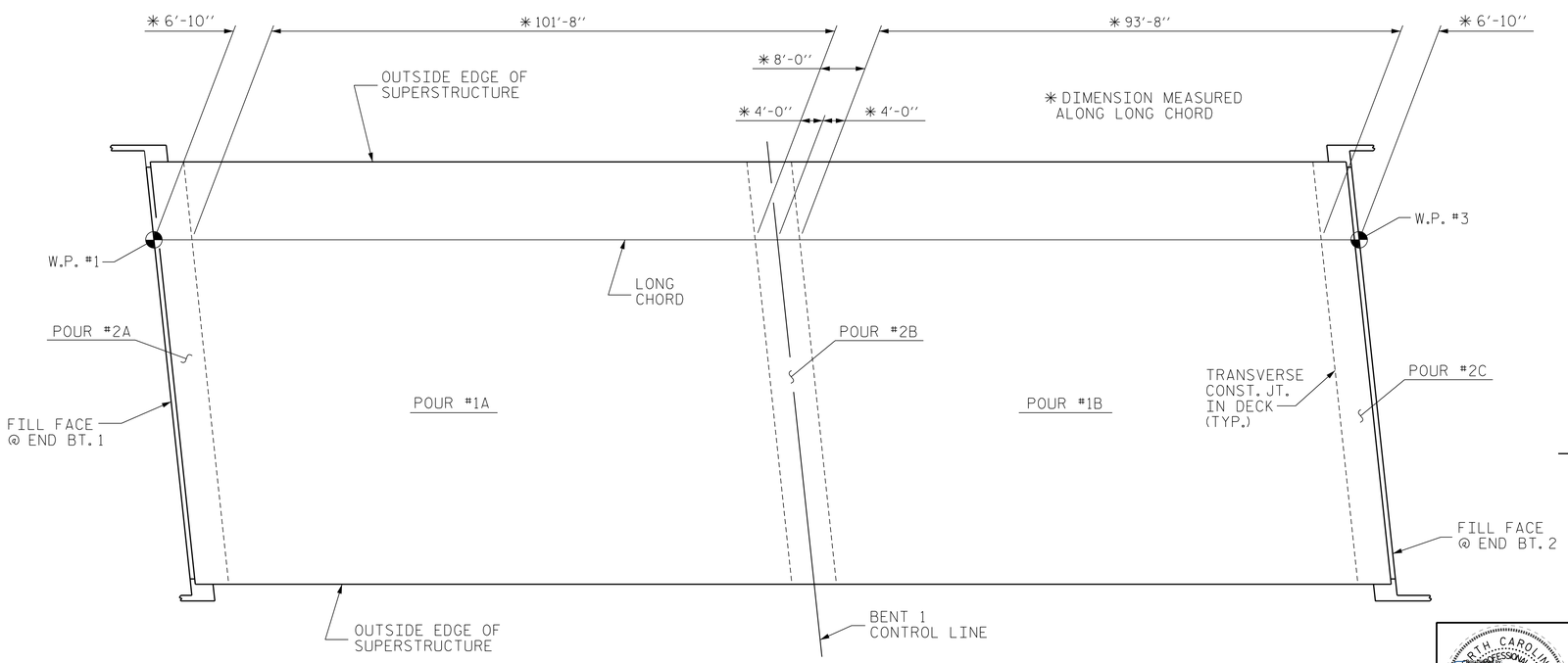

OPTIONAL CONCRETE DECK POUR DETAIL

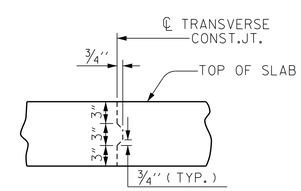

TRANSVERSE CONSTRUCTION JOINT DETAIL

NOTE: SLAB REINFORCING STEEL SHALL BE CONTINUOUS THRU JOINT

PROJECT NO. U-2579B
FORSYTH COUNTY
STATION: 642+81.42 -L-

STATE OF NORTH CAROLINA
DEPARTMENT OF TRANSPORTATION
RALEIGH

SUPERSTRUCTURE
CONCRETE DECK POUR DETAIL
(RIGHT LANE)

REVISIONS								SHEET NO.
NO.	BY:	DATE:	NO.	BY:	DATE:			S-531
1			3					TOTAL SHEETS
2			4					707

NORTH CAROLINA PROFESSIONAL SEAL 026891 ENGINEER JOHN T. DIFFEE III

WETHERILL ENGINEERING
559 Jones Franklin Rd. Suite 164
Raleigh, N.C. 27606
Bus: 919 851 8077
Fax: 919 851 8107
License: F-0377

TRANSPORTATION PLANNING/DESIGN - BRIDGE/STRUCTURE DESIGN
CIVIL/SITE DESIGN - GIS/GPS - CONSTRUCTION OBSERVATION

DRAWN BY : J.M. BRITT DATE : 2-4-14
CHECKED BY : B.C. HUNT DATE : 4-1-14
DESIGN ENGINEER OF RECORD : T. DIFFEE DATE : 4-15-14

P:\2013\13109.22 U-2579B\Structures\DGN\Str 14 (L-RtLane)\U2579B_SD_STR14_POUR_WE1.dgn
6/9/2014 4:33:25 PM