DocuSign Envelope ID: BAB32EDF-465D-49FC-8485-603013883276

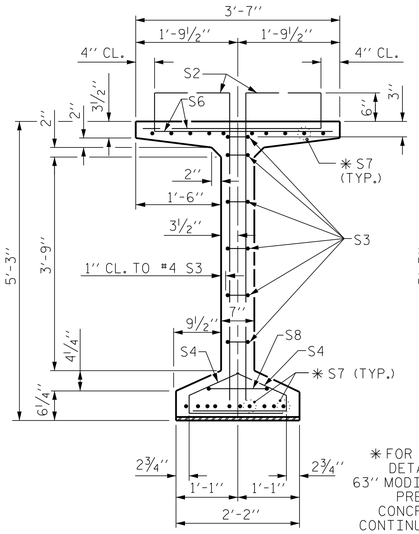

SECTION A-A

✱ FOR S7 BARS. SEE DETAIL "C" ON 63" MODIFIED BULB TEE PRESTRESSED CONCRETE GIRDER CONTINUOUS FOR LIVE LOAD DETAILS SHEET

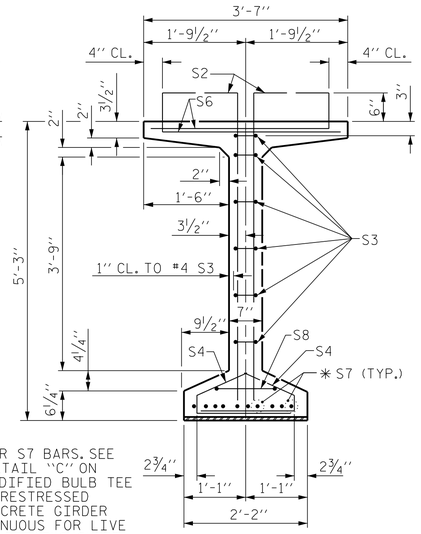

SECTION B-B

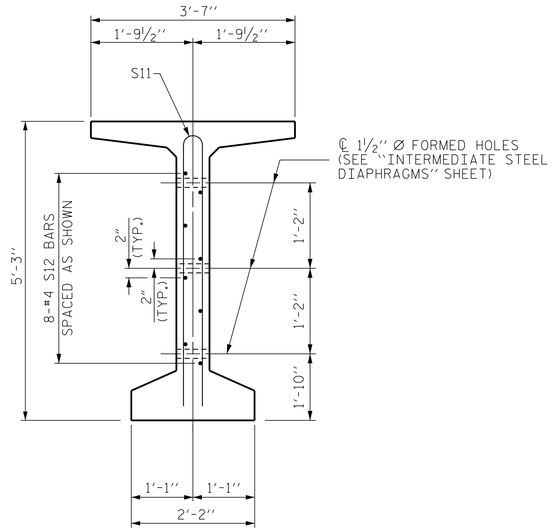

SECTION C-C

(S1, S6 AND S9 BARS NOT SHOWN)

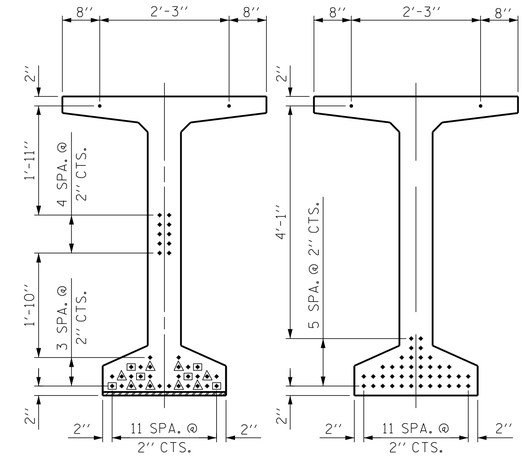

AT END OF GIRDER

AT ℄ OF GIRDER

0.6" Ø LOW RELAXATION STRAND LAYOUT

DEBONDING LEGEND

- ● FULLY BONDED STRANDS
- STRANDS DEBONDED FOR 2'-0" FROM END OF GIRDER
- STRANDS DEBONDED FOR 4'-0" FROM END OF GIRDER

0.6" Ø L. R. GRADE 270 STRANDS

AREA (SQUARE INCHES)	ULTIMATE STRENGTH (LBS. PER STRAND)	APPLIED PRESTRESS (LBS. PER STRAND)
0.217	58,600	43,950

REINFORCING STEEL FOR ONE GDR.

BAR	NUMBER	SIZE	TYPE	LENGTH	WEIGHT
S1	166	#4	1	6'-1"	675
S2	24	#6	1	6'-1"	219
S3	12	#4	2	8'-5"	67
S4	72	#4	3	3'-0"	144
S6	190	#5	4	4'-4"	859
✱ S7	30	#5	STR	3'-8"	115
S8	2	#5	2	9'-0"	19
S9	26	#5	STR	3'-3"	88
S10	2	#3	STR	1'-10"	1
S11	8	#5	5	10'-0"	83
S12	16	#4	STR	8'-0"	86

✱ NOTE: S7 BARS SHALL BE BENT BEFORE SHIPMENT. HEAT BENDING SHALL NOT BE ALLOWED.

BAR TYPES

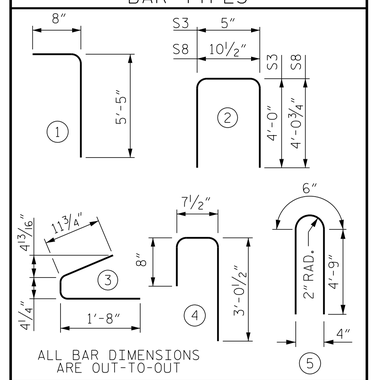

QUANTITIES FOR ONE GIRDER

SPAN "B"	REINFORCING STEEL	10,000 PSI CONCRETE	0.6" Ø L.R. STRANDS
	LB.	C.Y.	No.
GDR.'s B1 - B7	2,356	20.4	42

GIRDERS REQUIRED

NUMBER	LENGTH	TOTAL LENGTH
7	102'-9⅜"	719.47'

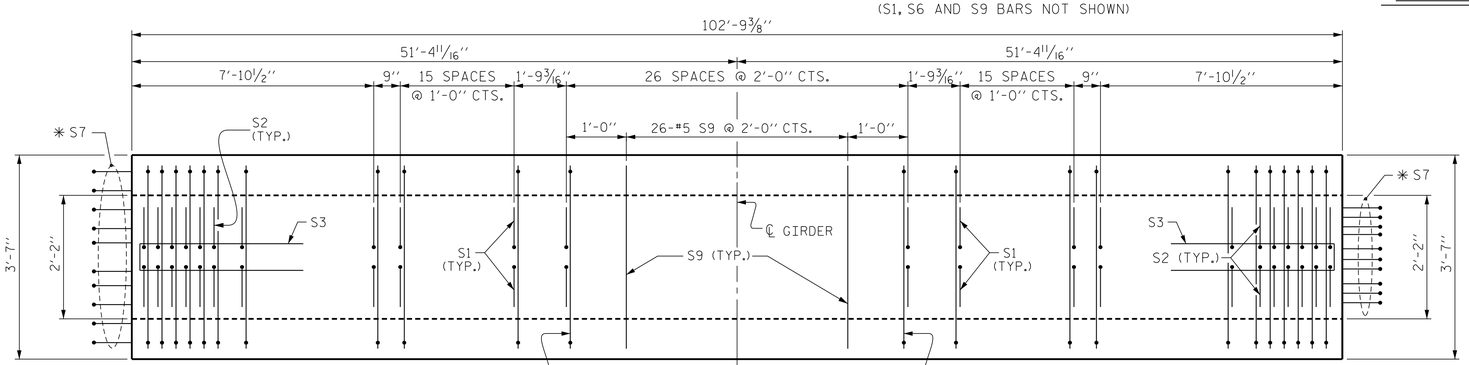

PLAN OF GIRDER

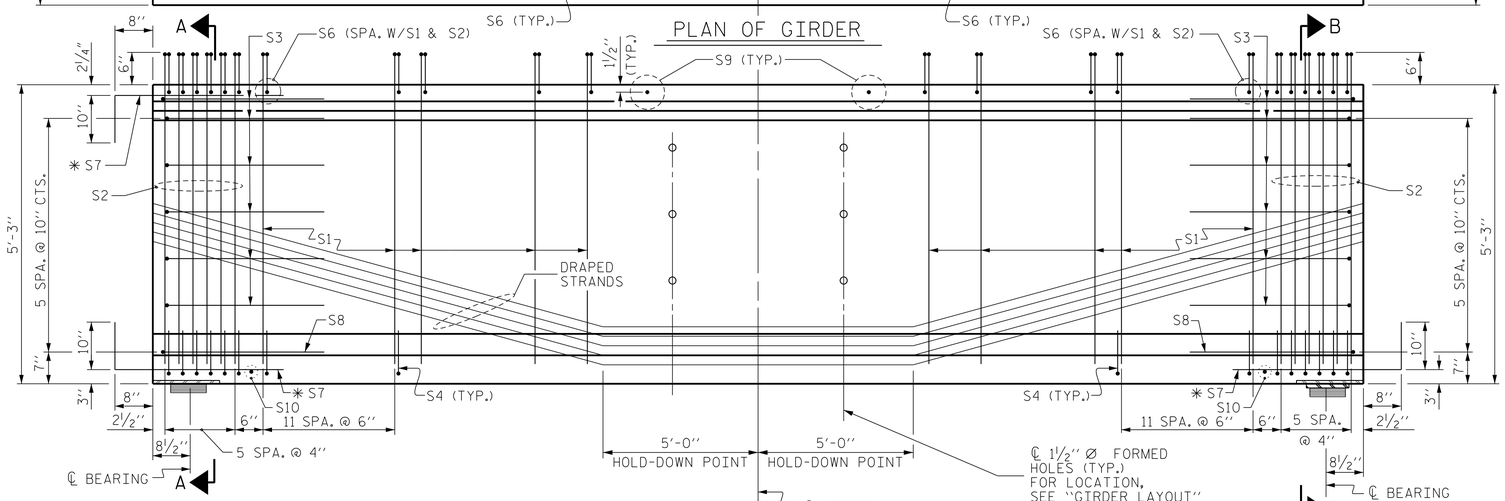

INTEGRAL END BENT

ELEVATION OF GIRDER

NOTE: THE UPLIFT FORCE DUE TO THE DRAPED STRANDS IS 20.5 KIPS.

FIXED

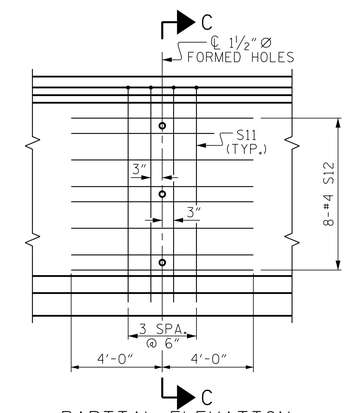

PARTIAL ELEVATION

SHOWING INTERMEDIATE STEEL DIAPHRAGM REINFORCING STEEL FOR GIRDERS

PROJECT NO. U-2579B

FORSYTH COUNTY

STATION: 642+81.42 -L-

SHEET 2 OF 5

STATE OF NORTH CAROLINA
DEPARTMENT OF TRANSPORTATION
RALEIGH

SUPERSTRUCTURE

63" PRESTRESSED CONCRETE MODIFIED BULB TEE CONTINUOUS FOR LIVE LOAD

—(SPAN "B"-RIGHT LANE)—

NORTH CAROLINA PROFESSIONAL SEAL 026891 ENGINEER JOHN T. DIFFEE III

WETHERILL ENGINEERING
559 Jones Franklin Rd. Suite 164
Raleigh, N.C. 27606
Bus: 919 851 8077
Fax: 919 851 8107
License: F-0377
TRANSPORTATION PLANNING/DESIGN - BRIDGE/STRUCTURE DESIGN
CIVIL/SITE DESIGN - GIS/GPS - CONSTRUCTION OBSERVATION

REVISIONS						SHEET NO.
NO.	BY:	DATE:	NO.	BY:	DATE:	S-523
1			3			TOTAL SHEETS
2			4			707

DRAWN BY : J.M. BRITT DATE : 10-1-13
CHECKED BY : B.C. HUNT DATE : 4-1-14
DESIGN ENGINEER OF RECORD : T. DIFFEE DATE : 4-15-14

P:\2013\13109.22 U-2579B\Structures\DGN\Str 14 (L-RtLane)\2579B_SD_STR14_PCG_WEI.dgn
6/9/2014 4:31:32 PM