DocuSign Envelope ID: BAB32EDF-465D-49FC-8485-603013883276

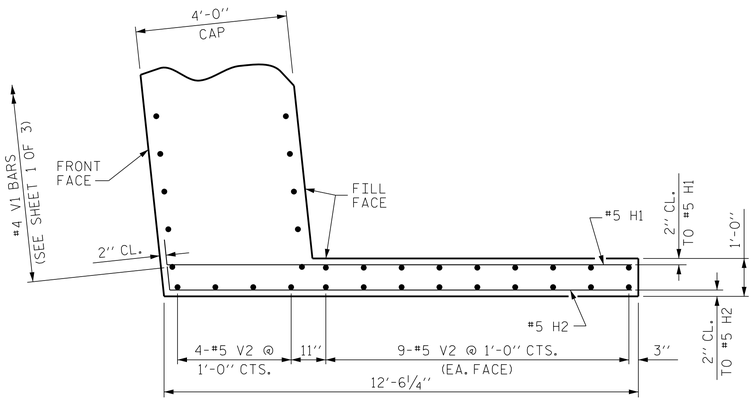

PLAN OF WING (W1)

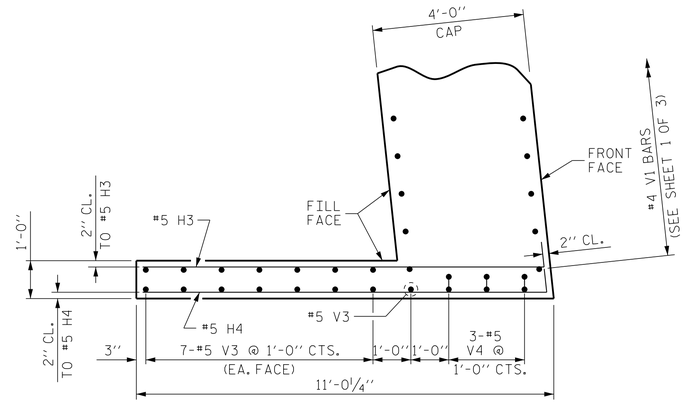

PLAN OF WING (W2)

BILL OF MATERIAL

END BENT 1

BAR	No.	SIZE	TYPE	LENGTH	WEIGHT
B1	12	#9	1	46'-8''	1904
B2	12	#10	1	46'-5''	2397
B3	21	#4	STR	3'-8''	51
B4	12	#5	STR	42'-7''	533
B5	12	#4	STR	29'-0''	232
H1	5	#5	5	13'-1''	68
H2	5	#5	5	13'-0''	68
H3	5	#5	6	11'-5''	60
H4	5	#5	6	11'-6''	60
S1	72	#5	2	11'-10''	889
S2	72	#5	3	4'-7''	344
S3	52	#4	4	6'-6''	226
V1	132	#4	STR	6'-0''	529
V2	22	#5	STR	10'-2''	233
V3	15	#5	STR	10'-4''	162
V4	3	#5	7	10'-6''	33

REINFORCING STEEL	7,789 LBS.
CLASS A CONCRETE	54.9 CU. YDS.
HP 12 × 53 STEEL PILES No. 13	860 LIN. FT.
CONCRETE STAINING	257.3 SQ. FT.

BAR TYPES

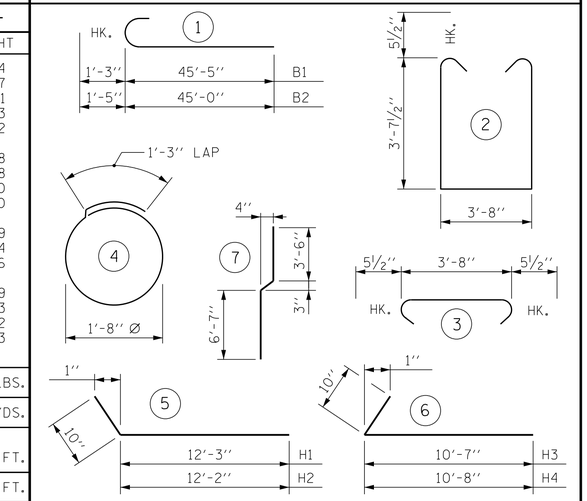

ALL BAR DIMENSIONS ARE OUT TO OUT.

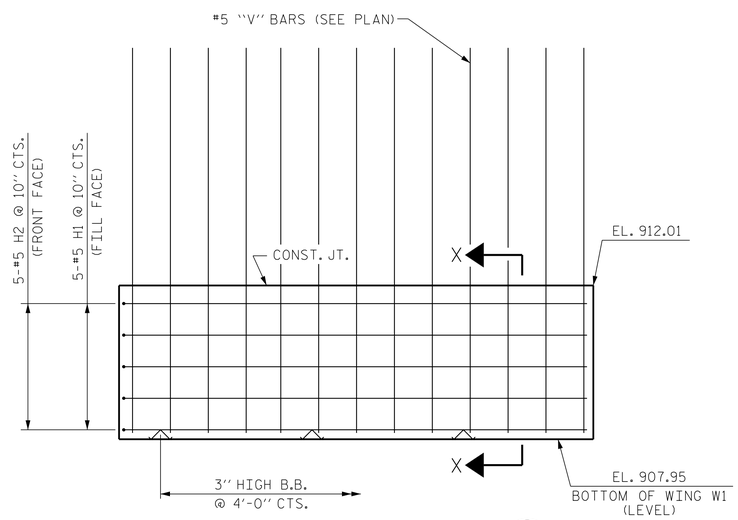

ELEVATION OF WING (W1)

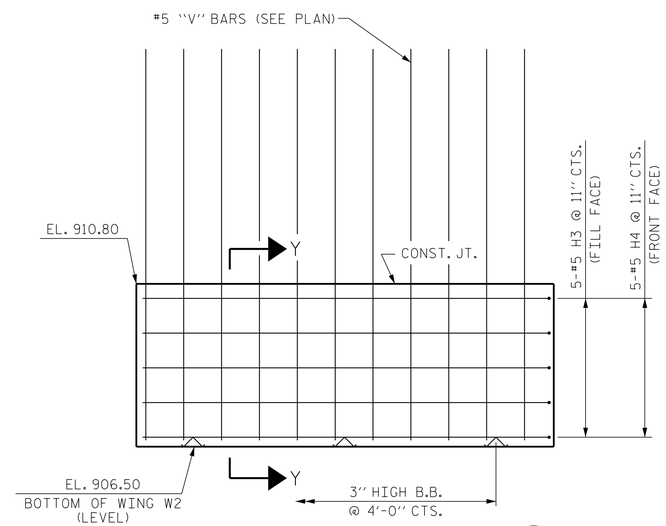

ELEVATION OF WING (W2)

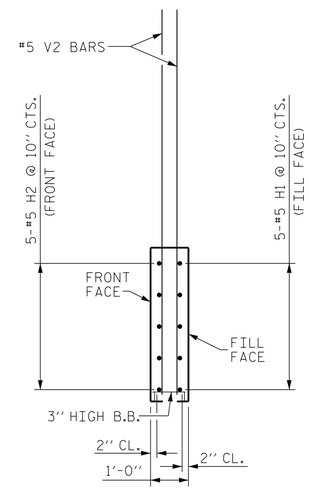

SECTION X-X

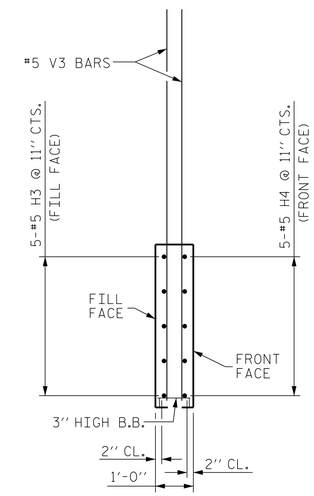

SECTION Y-Y

PROJECT NO. U-2579B
FORSYTH COUNTY
STATION: 642+81.42 -L-

SHEET 3 OF 3

STATE OF NORTH CAROLINA
DEPARTMENT OF TRANSPORTATION
RALEIGH

SUBSTRUCTURE

INTEGRAL END BENT 1

(RIGHT LANE)

REVISIONS							SHEET NO.
NO.	BY:	DATE:	NO.	BY:	DATE:		S-535
1			3				TOTAL SHEETS
2			4				707

NORTH CAROLINA PROFESSIONAL SEAL 026891 ENGINEER JOHN T. DIFFEE III

WETHERILL ENGINEERING
559 Jones Franklin Rd. Suite 164
Raleigh, N.C. 27606
Bus: 919 851 8077
Fax: 919 851 8107
License: F-0377
TRANSPORTATION PLANNING/DESIGN - BRIDGE/STRUCTURE DESIGN
CIVIL/SITE DESIGN - GIS/GPS - CONSTRUCTION OBSERVATION

DRAWN BY : J.M. BRITT DATE : 3-5-14
CHECKED BY : B.C. HUNT DATE : 4-9-14
DESIGN ENGINEER OF RECORD : T. DIFFEE DATE : 4-15-14

P:\2013\13109.22 U-2579B\Structures\DGN\Str 14 (L-Rt Lane)\U2579B_SD_STR14_EB1_WE1.dgn
7/10/2014 1:59:37 PM