DocuSign Envelope ID: BAB32EDF-465D-49FC-8485-603013883276

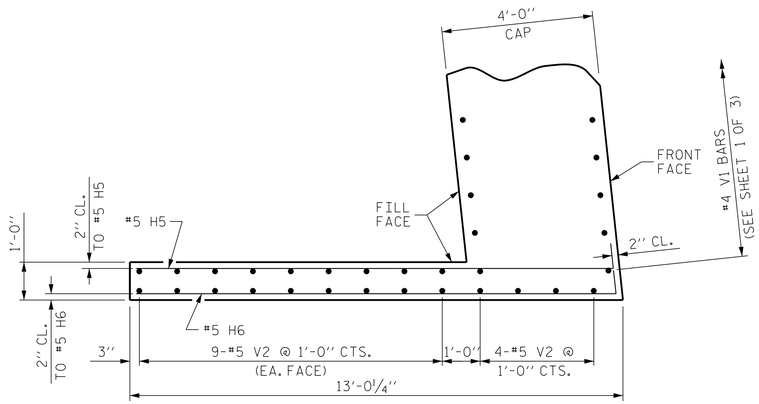

PLAN OF WING (W3)

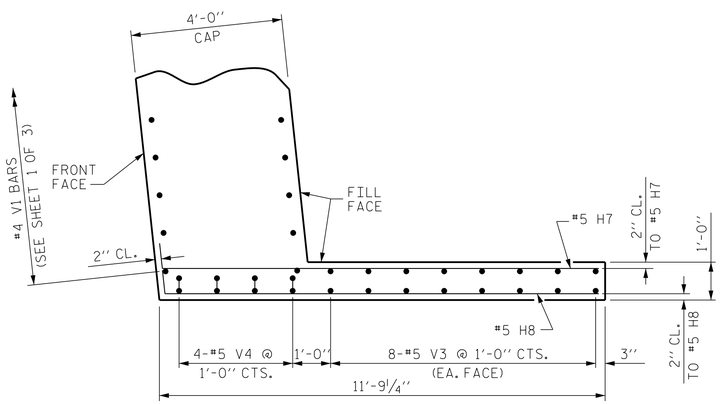

PLAN OF WING (W4)

BILL OF MATERIAL

END BENT 2

BAR	No.	SIZE	TYPE	LENGTH	WEIGHT
B1	12	#9	1	46'-8"	1904
B2	12	#10	1	46'-5"	2397
B3	21	#4	STR	3'-8"	51
B4	12	#5	STR	42'-7"	533
B5	12	#4	STR	29'-0"	232
H5	5	#5	6	13'-5"	70
H6	5	#5	6	13'-6"	70
H7	5	#5	5	12'-4"	64
H8	5	#5	5	12'-3"	64
S1	72	#5	2	11'-10"	889
S2	72	#5	3	4'-7"	344
S3	52	#4	4	6'-6"	226
V1	132	#4	STR	6'-0"	529
V2	22	#5	STR	10'-3"	235
V3	16	#5	STR	10'-4"	172
V4	4	#5	7	10'-6"	44

REINFORCING STEEL	7,824 LBS.
CLASS A CONCRETE	54.9 CU. YDS.
HP 12 x 53 STEEL PILES No. 13	500 LIN. FT.
PDA TESTING	1 EACH
CONCRETE STAINING	257.6 SQ. FT.

BAR TYPES

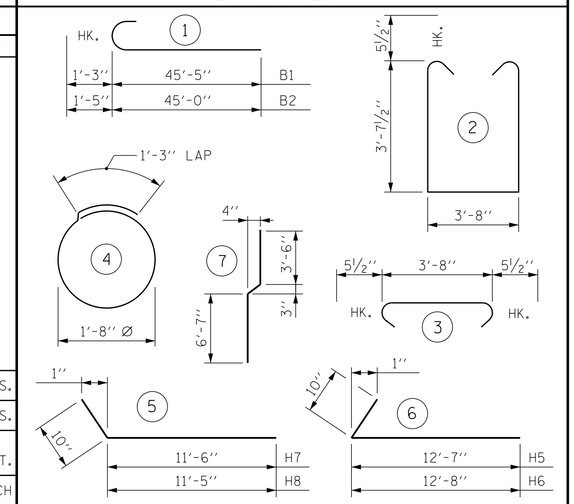

ALL BAR DIMENSIONS ARE OUT TO OUT.

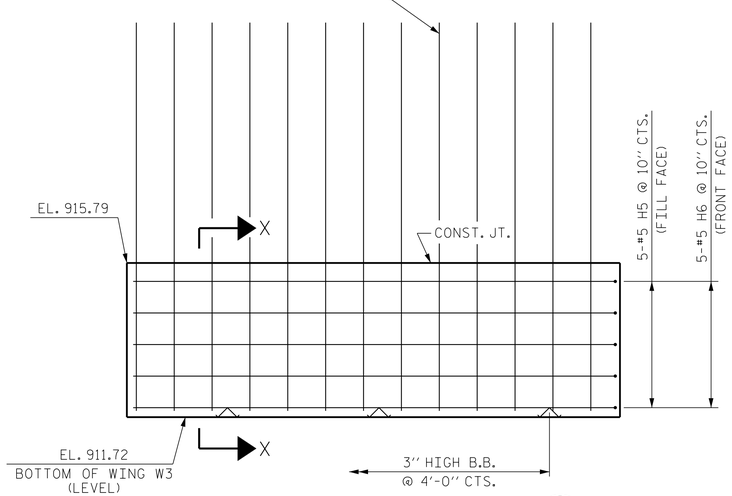

ELEVATION OF WING (W3)

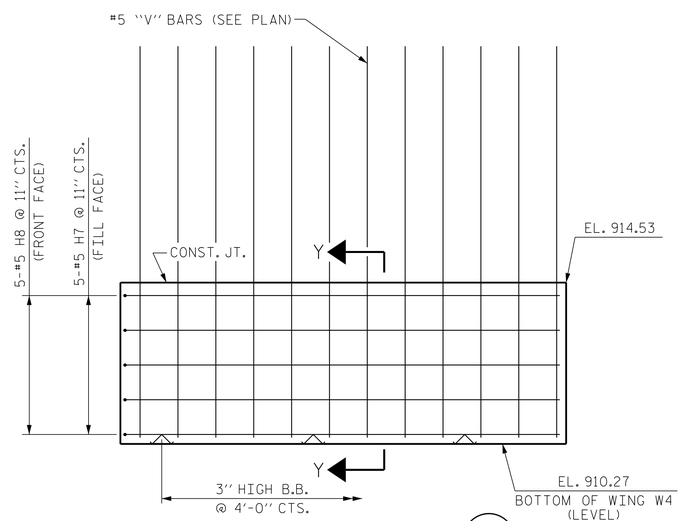

ELEVATION OF WING (W4)

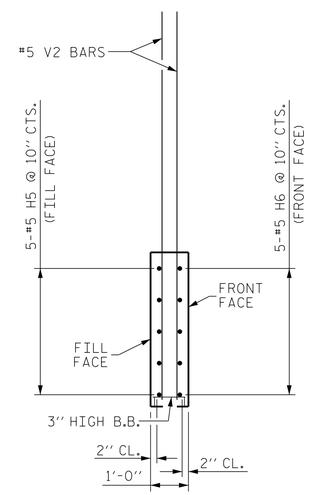

SECTION X-X

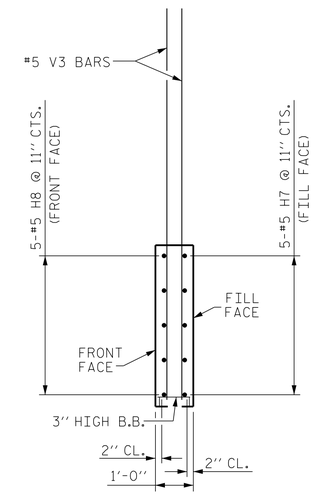

SECTION Y-Y

PROJECT NO. U-2579B

FORSYTH COUNTY

STATION: 642+81.42 -L-

SHEET 3 OF 3

STATE OF NORTH CAROLINA
DEPARTMENT OF TRANSPORTATION
RALEIGH

SUBSTRUCTURE

INTEGRAL END BENT 2

(RIGHT LANE)

REVISIONS							SHEET NO.
NO.	BY:	DATE:	NO.	BY:	DATE:		S-540
1			3				TOTAL SHEETS
2			4				707

NORTH CAROLINA PROFESSIONAL SEAL 026891 ENGINEER JOHN T. DIFFEE III

WETHERILL ENGINEERING
559 Jones Franklin Rd. Suite 164
Raleigh, N.C. 27606
Bus: 919 851 8077
Fax: 919 851 8107
License: F-0377

TRANSPORTATION PLANNING/DESIGN - BRIDGE/STRUCTURE DESIGN
CIVIL/SITE DESIGN - GIS/GPS - CONSTRUCTION OBSERVATION

DRAWN BY : J.M. BRITT DATE : 3-11-14
CHECKED BY : B.C. HUNT DATE : 4-9-14
DESIGN ENGINEER OF RECORD : T. DIFFEE DATE : 4-15-14

P:\2013\13109.22 U-2579B\Structures\DGN\Str 14 (LRtLane)\U2579B_SD_STR14_EB2_WE1.dgn
7/10/2014 2:00:32 PM