DocuSign Envelope ID: 6391EFB2-3537-460D-944E-DBFAE7256BD3

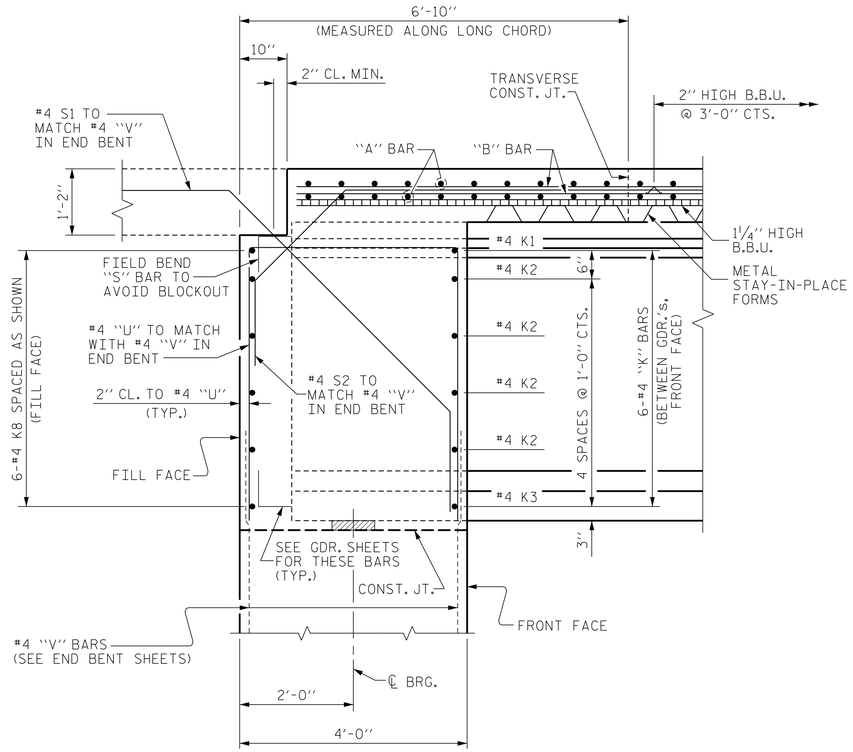

SECTION THRU INTEGRAL END BENT DIAPHRAGM

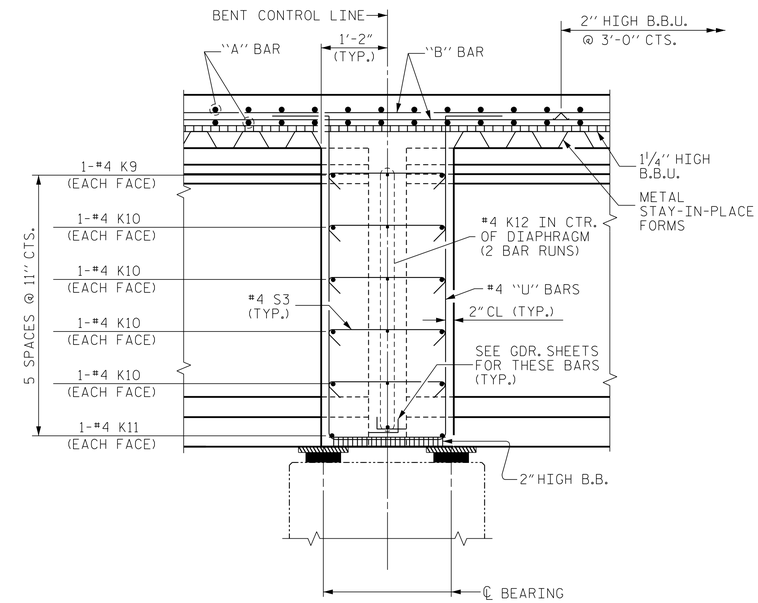

SECTION THRU CONTINUOUS BENT DIAPHRAGM

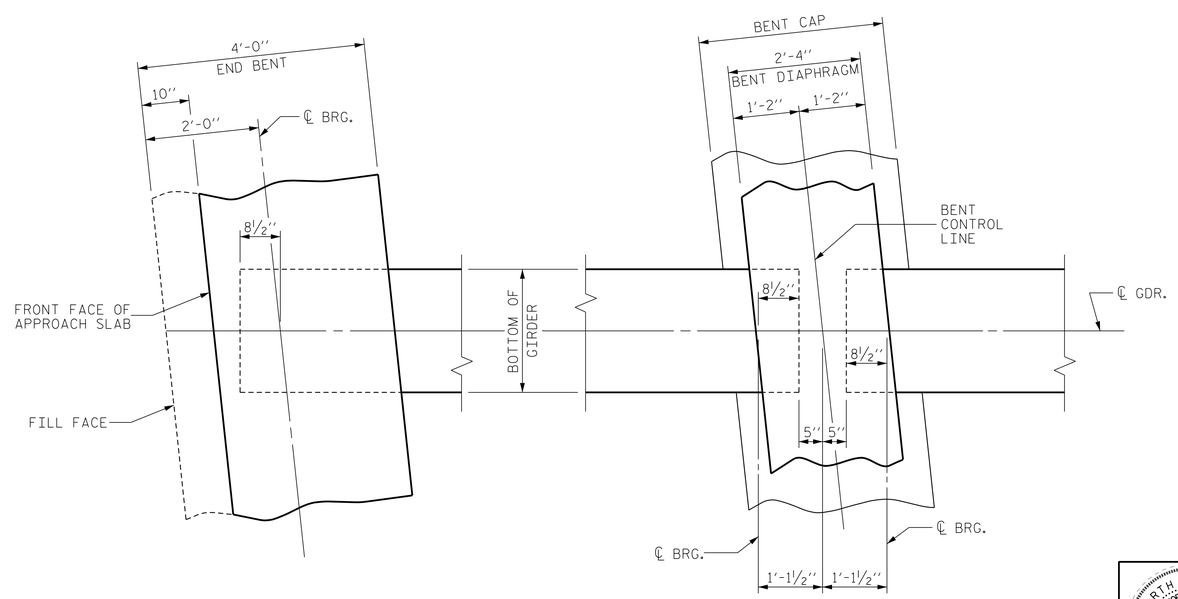

END BENT

BENT DIAPHRAGM

PLAN OF DIAPHRAGMS

PROJECT NO. U-2579B

FORSYTH COUNTY

STATION: 46+87.16-Y4CD-

SHEET 3 OF 3

STATE OF NORTH CAROLINA
DEPARTMENT OF TRANSPORTATION
RALEIGH

SUPERSTRUCTURE

TYPICAL SECTION

NORTH CAROLINA PROFESSIONAL SEAL 026891 ENGINEER JOHN T. DIFFEE III

WETHERILL ENGINEERING
559 Jones Franklin Rd. Suite 164
Raleigh, N.C. 27606
Bus: 919 851 8077
Fax: 919 851 8107
License: F-0377

TRANSPORTATION PLANNING/DESIGN - BRIDGE/STRUCTURE DESIGN
CIVIL/SITE DESIGN - GIS/GPS - CONSTRUCTION OBSERVATION

REVISIONS						SHEET NO.
NO.	BY:	DATE:	NO.	BY:	DATE:	S-441
1			3			TOTAL SHEETS
2			4			707

DRAWN BY : J.M. BRITT DATE : 9-4-13
CHECKED BY : B.C. HUNT DATE : 4-1-14
DESIGN ENGINEER OF RECORD : T. DIFFEE DATE : 4-15-14

P:\2013\13109.22 U-2579B\Structures\DGN\Str 12 (Y4CD)\U2579B_SD_STR12_TS_WE1.dgn
6/6/2014 8:36:01 AM