DocuSign Envelope ID: 6391EFB2-3537-460D-944E-DBFAE7256BD3

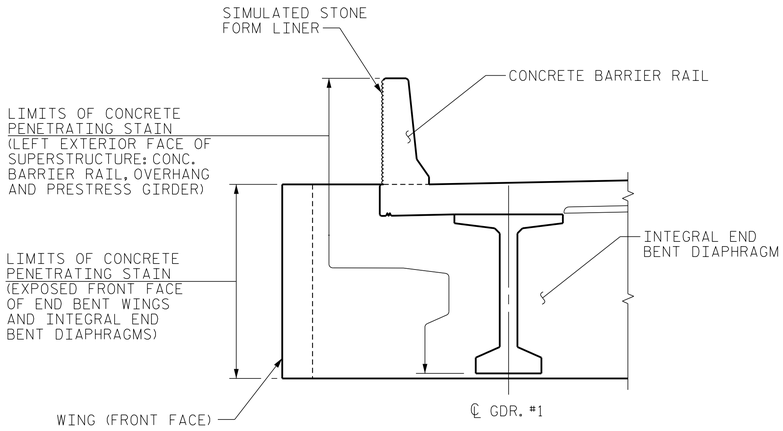

CONCRETE STAINING DETAIL - SUPERSTRUCTURE

SEE SPECIAL PROVISION FOR ARCHITECTURAL CONCRETE SURFACE TREATMENTS.

CONCRETE STAINING SUPERSTRUCTURE	
BARRIER RAIL	748.6 SQ.FT.
DECK OVERHANG	762.1 SQ.FT.
PRESTRESS GIRDER	1,495.7 SQ.FT.
END BENT 1: SUPERSTRUCTURE	408.4 SQ.FT.
END BENT 2: SUPERSTRUCTURE	412.7 SQ.FT.
TOTAL	3,827.5 SQ.FT.

REINFORCING BAR SCHEDULE

SPAN "A-B"

BAR	No.	SIZE	TYPE	LENGTH	WEIGHT
✳A1	386	#5	STR	53'-6"	21539
A2	386	#5	STR	53'-6"	21539
✳A101	2	#5	STR	49'-4"	103
✳A102	2	#5	STR	44'-3"	92
✳A103	2	#5	STR	39'-2"	82
✳A104	2	#5	STR	34'-1"	71
✳A105	2	#5	STR	29'-0"	60
✳A106	2	#5	STR	23'-11"	50
✳A107	2	#5	STR	18'-10"	39
✳A108	2	#5	STR	13'-9"	29
✳A109	2	#5	STR	8'-8"	18
✳A110	2	#5	STR	3'-7"	7
A201	2	#5	STR	49'-4"	103
A202	2	#5	STR	44'-3"	92
A203	2	#5	STR	39'-2"	82
A204	2	#5	STR	34'-1"	71
A205	2	#5	STR	29'-0"	60
A206	2	#5	STR	23'-11"	50
A207	2	#5	STR	18'-10"	39
A208	2	#5	STR	13'-9"	29
A209	2	#5	STR	8'-8"	18
A210	2	#5	STR	3'-7"	7
✳B1	16	#4	STR	28'-7"	305
✳B2	142	#7	STR	24'-10"	7208
✳B3	108	#7	STR	30'-2"	6659
✳B4	35	#7	STR	35'-0"	2504
✳B5	72	#4	STR	26'-1"	1255
✳B6	72	#4	STR	22'-4"	1074
B7	192	#6	STR	55'-7"	16029
H1	7	#4	6	10'-5"	49
H2	4	#4	6	10'-4"	28
H3	7	#5	7	11'-5"	83
H4	7	#5	7	11'-6"	84
H5	7	#4	7	10'-9"	50
H6	4	#4	7	10'-10"	29
H7	7	#5	6	12'-1"	88
H8	7	#5	6	12'-0"	88
H9	3	#4	6	6'-10"	14
H10	3	#4	7	7'-4"	15
K1	8	#4	STR	7'-5"	40
K2	32	#4	STR	10'-5"	223
K3	8	#4	STR	8'-10"	47
K4	20	#4	STR	2'-8"	36
K5	4	#4	STR	5'-0"	13
K6	16	#4	STR	6'-6"	69
K7	4	#4	STR	5'-10"	16
K8	36	#4	STR	21'-3"	511
K9	8	#4	STR	7'-9"	41
K10	32	#4	STR	10'-5"	223
K11	8	#4	STR	7'-8"	41
K12	12	#4	STR	24'-0"	192
✳S1	64	#4	1	11'-6"	492
✳S2	64	#4	1	11'-9"	502
S3	176	#4	5	2'-9"	323
U1	64	#4	2	12'-8"	542
U2	20	#4	2	11'-8"	156
U3	12	#4	2	15'-6"	124
✳U4	32	#4	4	16'-6"	353
U5	8	#4	3	8'-3"	44

REINFORCING STEEL 41,288 LBS.

✳ EPOXY COATED REINFORCING STEEL 42,442 LBS.

✳ THESE BARS ARE EPOXY COATED

SUPERSTRUCTURE REINFORCING STEEL LENGTHS ARE BASED ON THE FOLLOWING MINIMUM SPLICE LENGTHS					
BAR SIZE	SUPERSTRUCTURE EXCEPT APPROACH SLABS, PARAPET, AND BARRIER RAIL		APPROACH SLABS		PARAPET AND BARRIER RAIL
	EPOXY COATED	UNCOATED	EPOXY COATED	UNCOATED	
#4	2'-0"	1'-9"	2'-0"	1'-9"	2'-9"
#5	2'-6"	2'-2"	2'-6"	2'-2"	3'-5"
#6	3'-0"	2'-7"	3'-10"	2'-7"	4'-4"
#7	5'-3"	3'-6"			
#8	6'-10"	4'-7"			

BAR TYPES

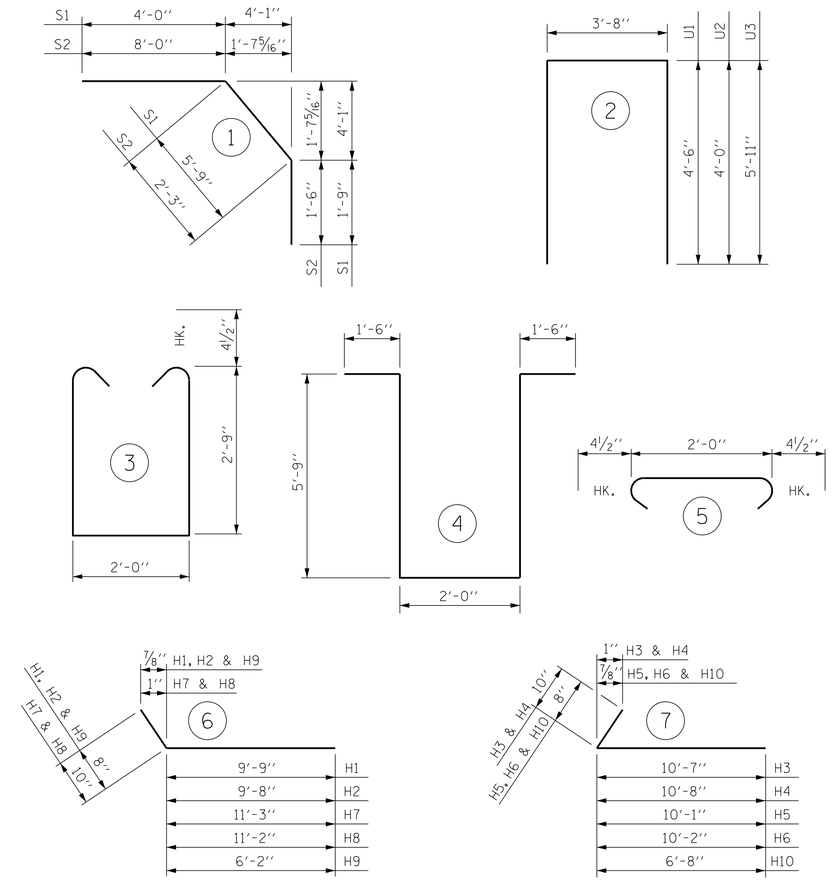

ALL BAR DIMENSIONS ARE OUT TO OUT

SUPERSTRUCTURE BILL OF MATERIAL

-Y4CD-	CLASS AA CONCRETE	REINFORCING STEEL	EPOXY COATED REINFORCING STEEL
	(CU. YDS.)	(LBS.)	(LBS.)
SPAN "A-B"	515.9	41,288	42,442
TOTALS ✳✳	515.9	41,288	42,442

✳✳ QUANTITIES FOR BARRIER RAIL ARE NOT INCLUDED

SEE "CONCRETE DECK POUR DETAIL" SHEET FOR CLASS AA CONCRETE BREAKDOWN.

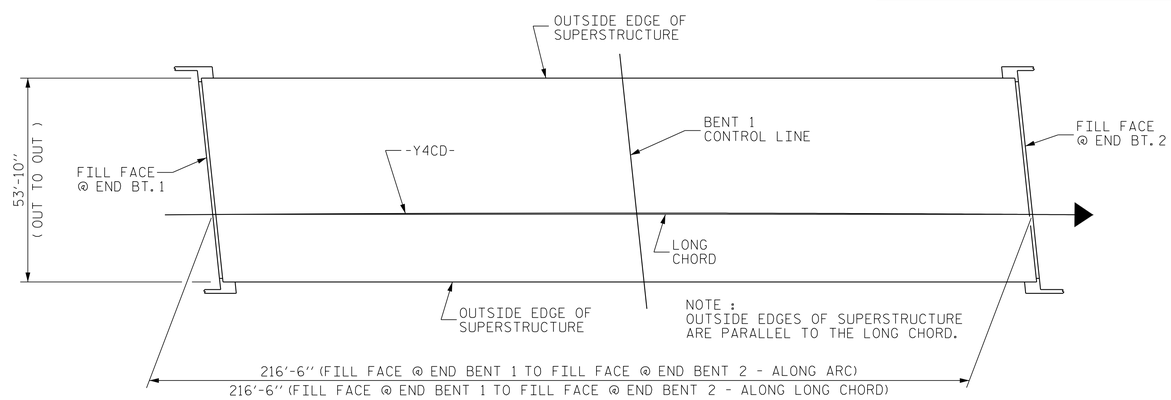

LAYOUT FOR COMPUTING AREA REINFORCED CONCRETE DECK SLAB (SQ. FT. = 11,655)

PROJECT NO. U-2579B

FORSYTH COUNTY

STATION: 46+87.16-Y4CD-

STATE OF NORTH CAROLINA
DEPARTMENT OF TRANSPORTATION
RALEIGH

SUPERSTRUCTURE

BILL OF MATERIAL

NORTH CAROLINA PROFESSIONAL SEAL 026891 ENGINEER JOHN T. DIFFEE III

WETHERILL ENGINEERING
559 Jones Franklin Rd. Suite 164
Raleigh, N.C. 27606
Bus: 919 851 8077
Fax: 919 851 8107
License: F-0377

TRANSPORTATION PLANNING/DESIGN - BRIDGE/STRUCTURE DESIGN
CIVIL/SITE DESIGN - GIS/GPS - CONSTRUCTION OBSERVATION

REVISIONS						SHEET NO.
NO.	BY:	DATE:	NO.	BY:	DATE:	S-458
1			3			TOTAL SHEETS
2			4			707

DRAWN BY: J.M. BRITT DATE: 1-28-14
CHECKED BY: B.C. HUNT DATE: 4-1-14
DESIGN ENGINEER OF RECORD: T. DIFFEE DATE: 4-15-14

P:\2013\13109.22 U-2579B\Structures\DGN\Str 12 (Y4CD)NU2579B_SD_STR12_BM_WE1.dgn
7/10/2014 2:10:32 PM