DocuSign Envelope ID: 6391EFB2-3537-460D-944E-DBFAE7256BD3

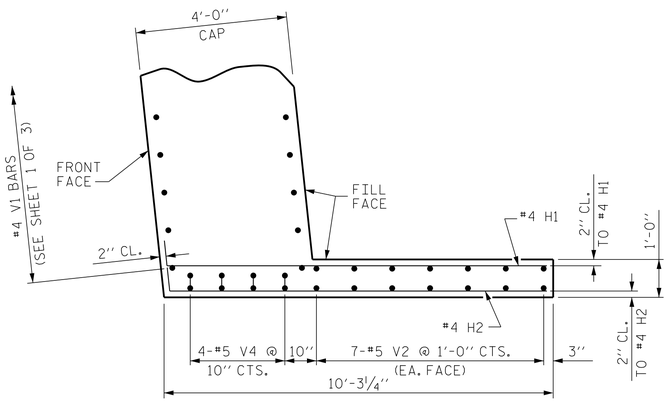

PLAN OF WING (W1)

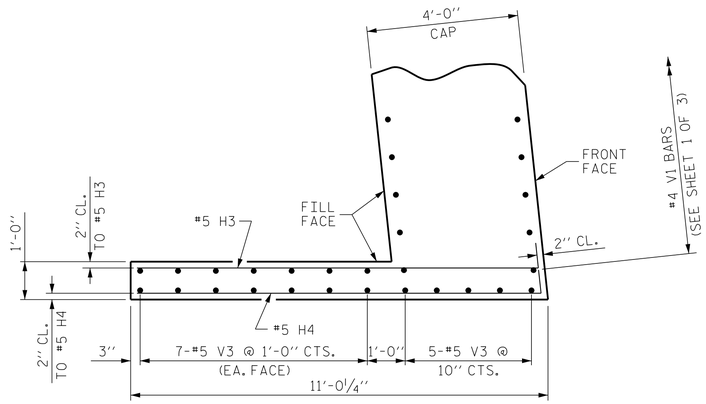

PLAN OF WING (W2)

BILL OF MATERIAL

END BENT 1

BAR	No.	SIZE	TYPE	LENGTH	WEIGHT
B1	12	#9	1	35'-6"	1448
B2	12	#10	1	35'-3"	1820
B3	12	#4	STR	17'-0"	136
B4	6	#5	STR	59'-11"	375
B5	12	#4	STR	21'-7"	173
B6	15	#4	STR	3'-8"	37
H1	5	#4	6	10'-5"	35
H2	5	#4	6	10'-4"	35
H3	5	#5	7	11'-5"	60
H4	5	#5	7	11'-6"	60
S1	56	#5	2	11'-10"	691
S2	56	#5	5	4'-7"	268
S3	36	#4	4	6'-6"	156
U1	21	#4	3	6'-8"	94
V1	96	#4	STR	6'-5"	411
V2	14	#5	STR	10'-0"	146
V3	19	#5	STR	10'-6"	208
V4	4	#5	8	10'-2"	42

REINFORCING STEEL	6,195 LBS.
CLASS A CONCRETE	42.1 CU. YDS.
HP 12 x 53 STEEL PILES No. 9	570 LIN. FT.
CONCRETE STAINING	199.5 SQ. FT.

BAR TYPES

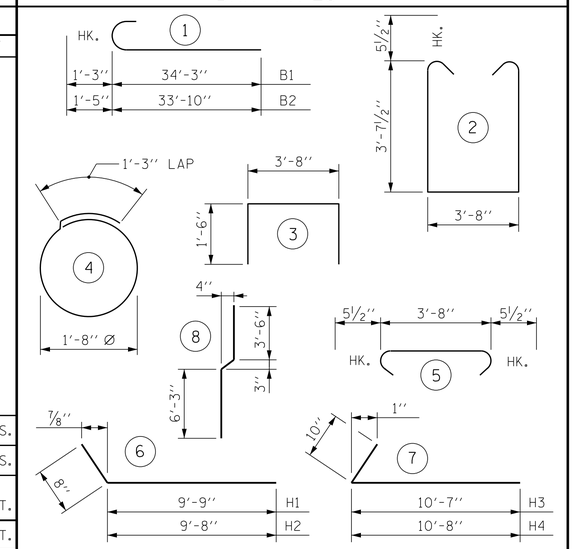

ALL BAR DIMENSIONS ARE OUT TO OUT.

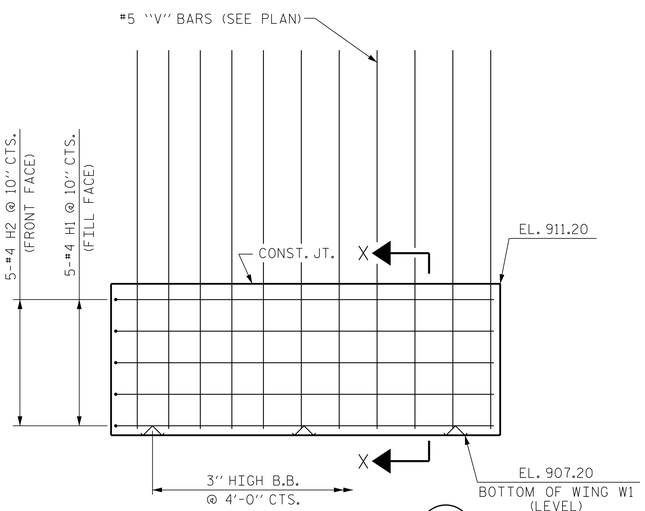

ELEVATION OF WING (W1)

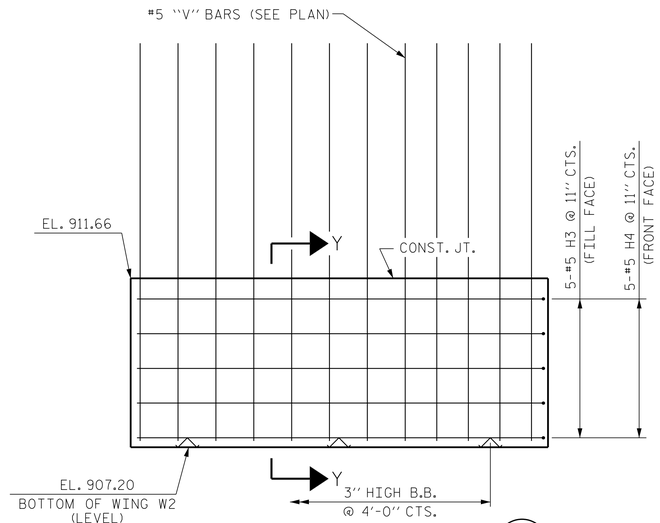

ELEVATION OF WING (W2)

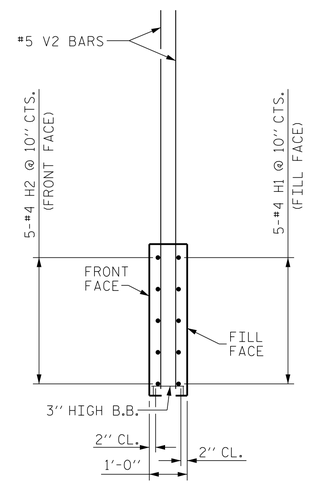

SECTION X-X

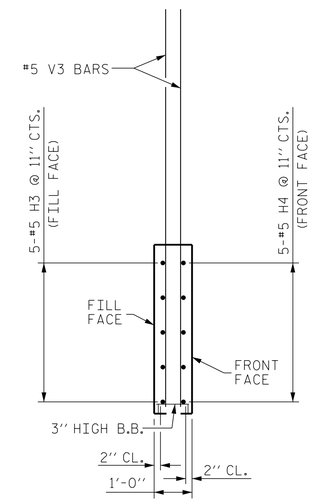

SECTION Y-Y

PROJECT NO. U-2579B
FORSYTH COUNTY
STATION: 46+87.16-Y4CD-

SHEET 3 OF 3

STATE OF NORTH CAROLINA
DEPARTMENT OF TRANSPORTATION
RALEIGH

SUBSTRUCTURE

INTEGRAL END BENT 1

NORTH CAROLINA PROFESSIONAL SEAL 026891 ENGINEER JOHN T. DIFFEE III

WETHERILL ENGINEERING
559 Jones Franklin Rd. Suite 164
Raleigh, N.C. 27606
Bus: 919 851 8077
Fax: 919 851 8107
License: F-0377
TRANSPORTATION PLANNING/DESIGN - BRIDGE/STRUCTURE DESIGN
CIVIL/SITE DESIGN - GIS/GPS - CONSTRUCTION OBSERVATION

REVISIONS							SHEET NO.
NO.	BY:	DATE:	NO.	BY:	DATE:		S-461
1			3				TOTAL SHEETS
2			4				707

DRAWN BY : J.M. BRITT DATE : 2-26-14
CHECKED BY : B.C. HUNT DATE : 4-9-14
DESIGN ENGINEER OF RECORD : T. DIFFEE DATE : 4-15-14

P:\2013\13109.22 U-2579B\Structures\DGN\Str 12 (Y4CD)\U2579B_SD_STR12_EB1_WEI.dgn
7/10/2014 2:15:07 PM