DocuSign Envelope ID: 6391EFB2-3537-460D-944E-DBFAE7256BD3

NOTES

ALL PRESTRESSING STRANDS SHALL BE 7-WIRE LOW-RELAXATION GRADE 270 STRANDS AND SHALL CONFORM TO AASHTO M203 EXCEPT FOR SAMPLING REQUIREMENTS WHICH SHALL BE IN ACCORDANCE WITH THE STANDARD SPECIFICATIONS.

ALL REINFORCING STEEL SHALL BE GRADE 60.

EMBEDDED PLATE "B-1" SHALL BE GALVANIZED IN ACCORDANCE WITH THE STANDARD SPECIFICATIONS. BEVEL EDGES OF PLATE "B-1" TO GIVE CLOSE FIT BUT NOT TIGHT FIT TO STEEL CASTING FORM.

ANCHOR STUDS SHALL CONFORM TO AASHTO M169 GRADES 1010 THROUGH 1020 OR APPROVED EQUAL, AND SHALL MEET THE TYPE "B" REQUIREMENTS OF SUBSECTION 7.3 OF THE ANSI/AASHTO/AWS D1.5 BRIDGE WELDING CODE.

AT ENDS OF GIRDERS TO BE EMBEDDED IN CONCRETE DIAPHRAGMS OR END WALLS, PRESTRESSING STRANDS MAY EXTEND A MAXIMUM OF 2" BEYOND THE GIRDER ENDS. OTHERWISE, PRESTRESSING STRANDS SHALL BE CUT FLUSH WITH THE GIRDER ENDS.

THE TRANSFER OF LOAD FROM THE ANCHORAGES TO THE GIRDER SHALL BE DONE WHEN CONCRETE HAS REACHED A COMPRESSIVE STRENGTH OF NOT LESS THAN 7,600 PSI.

DEPENDING ON THE TYPE OF SYSTEM USED TO SUPPORT THE DECK SLAB FORMS, PRESET ANCHORS MAY BE NECESSARY IN THE PRESTRESSED CONCRETE GIRDER.

THE TOP SURFACE OF THE GIRDER, EXCLUDING THE OUTSIDE 4", SHALL BE RAKED TO A DEPTH OF 1/4".

WHEN DRAPED STRANDS ARE DETAILED, THE LONGITUDINAL LOCATION OF THE HOLD DOWN DEVICES SHALL BE WITHIN 6" OF THE LOCATION SHOWN AND THE CENTER OF GRAVITY OF THE GROUP OF DRAPED STRANDS SHALL BE LOCATED WITHIN 1/2" OF THE THEORETICAL LOCATION SHOWN.

A 2" x 2" CHAMFER IS ALLOWED AT THE INTERSECTION OF THE WEB AND THE BOTTOM FLANGE OF THE 63" MODIFIED BULB TEES.

THE CONTRACTOR HAS THE OPTION TO PROVIDE, AT NO ADDITIONAL COST TO THE DEPARTMENT, 2 ADDITIONAL STRANDS AT THE TOP OF THE GIRDER TO FACILITATE TYING OF THE REINFORCING STEEL. THESE STRANDS SHALL BE PULLED TO A LOAD OF 4,500 lbs.

SECTION "G"

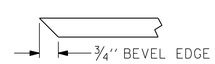

SECTION "F"

(SEE NOTES)

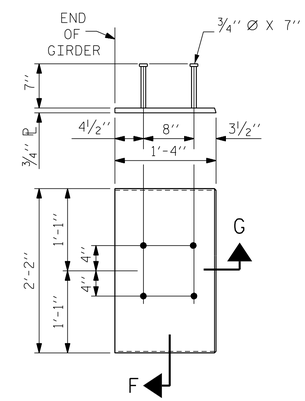

EMBEDDED PLATE "B-1" DETAILS FOR 63" MODIFIED BULB TEES

(2 REQ'D PER GIRDER)

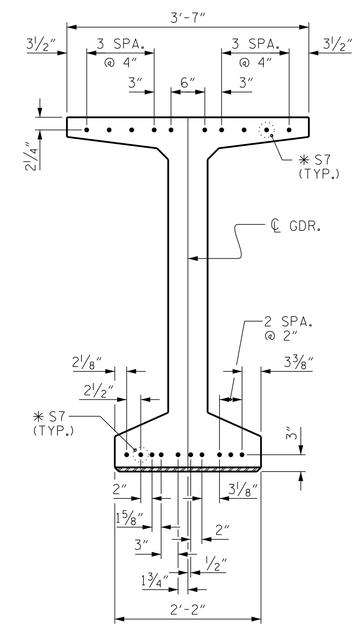

DETAIL "C"

PROJECT NO. U-2579B

FORSYTH COUNTY

STATION: 46+87.16-Y4CD-

SHEET 3 OF 5

STATE OF NORTH CAROLINA
DEPARTMENT OF TRANSPORTATION
RALEIGH

SUPERSTRUCTURE
63" MODIFIED BULB TEE PRESTRESSED CONCRETE GIRDER
CONTINUOUS FOR LIVE LOAD
DETAILS

NORTH CAROLINA PROFESSIONAL SEAL 026891 ENGINEER JOHN T. DIFFEE III

WETHERILL ENGINEERING
559 Jones Franklin Rd. Suite 164
Raleigh, N.C. 27606
Bus: 919 851 8077
Fax: 919 851 8107
License: F-0377
TRANSPORTATION PLANNING/DESIGN - BRIDGE/STRUCTURE DESIGN
CIVIL/SITE DESIGN - GIS/GPS - CONSTRUCTION OBSERVATION

REVISIONS						SHEET NO.
NO.	BY:	DATE:	NO.	BY:	DATE:	S-450
1			3			TOTAL SHEETS
2			4			707

DRAWN BY : J.M. BRITT DATE : 10-1-13
CHECKED BY : B.C. HUNT DATE : 4-1-14
DESIGN ENGINEER OF RECORD : T. DIFFEE DATE : 4-15-14

P:\2013\13109.22 U-2579B\Structures\DGN\Str 12 Y4CDNU2579B_SD_STR12_PCG_WEI.dgn
6/6/2014 10:24:36 AM