DocuSign Envelope ID: 6391EFB2-3537-460D-944E-DBFAE7256BD3

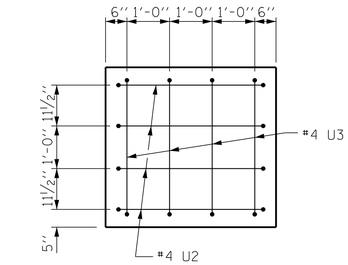

VIEW X-X

(RECESS FOR MEDALLION NOT SHOWN FOR CLARITY)

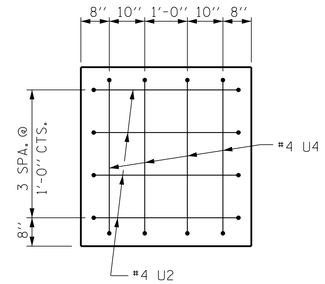

VIEW Y-Y

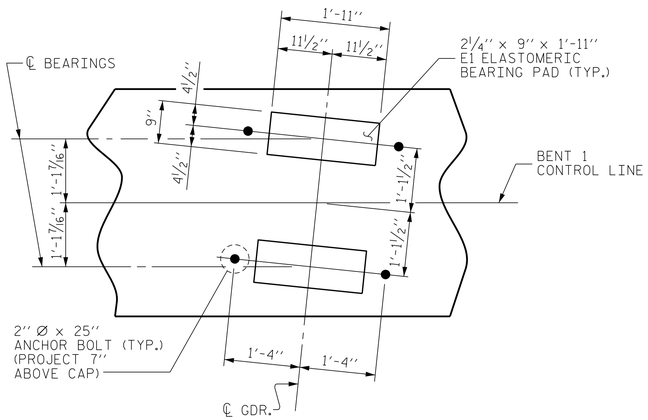

DETAIL "A"

NOTE :
ALL GIRDERS ARE PARALLEL
TO THE LONG CHORD

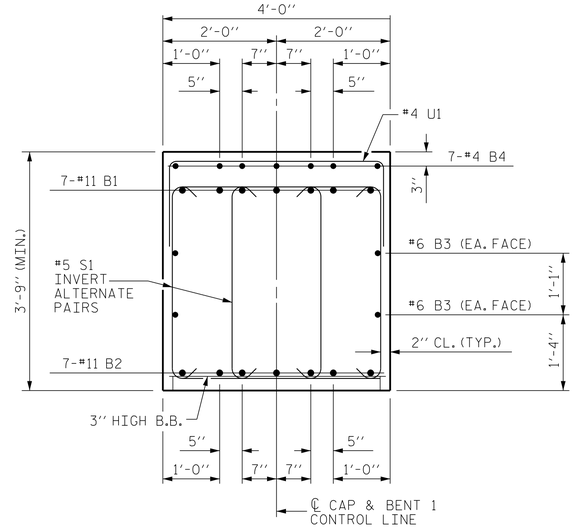

SECTION A-A

BAR TYPES

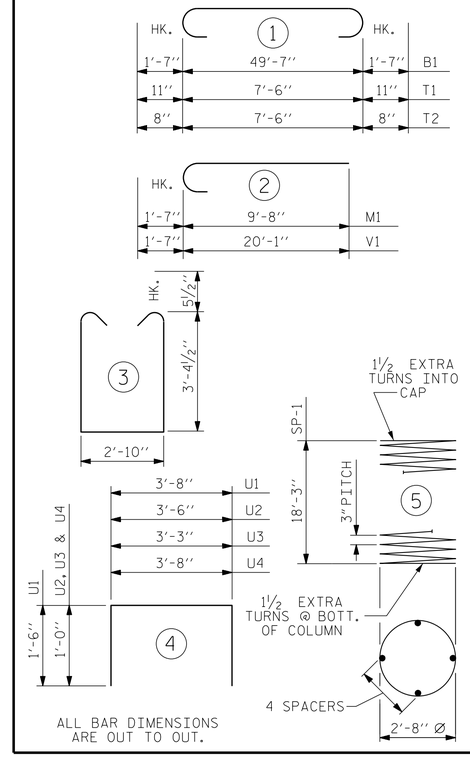

ALL BAR DIMENSIONS
ARE OUT TO OUT.

BILL OF MATERIAL

BENT 1

BAR	No.	SIZE	TYPE	LENGTH	WEIGHT
B1	7	#11	1	52'-9"	1962
B2	7	#11	STR	49'-9"	1850
B3	4	#6	STR	49'-9"	299
B4	7	#4	STR	26'-9"	125
M1	24	#11	2	11'-3"	1435
S1	140	#5	3	10'-6"	1533
T1	90	#8	1	9'-4"	2243
T2	54	#6	1	8'-10"	716
U1	45	#4	4	6'-8"	200
U2	8	#4	4	5'-6"	29
U3	4	#4	4	5'-3"	14
U4	4	#4	4	5'-8"	15
V1	24	#11	2	21'-8"	2763
REINFORCING STEEL					13,184 LBS.
SP-1	3	*	5	627'-1"	1257
SPIRAL COLUMN REINFORCING STEEL					1,257 LBS.

* SP-1 SPIRAL REINFORCING STEEL SHALL BE W20 OR D-20 COLD DRAWN WIRE OR #4 PLAIN OR DEFORMED BAR

CLASS A CONCRETE BREAKDOWN	
POUR #1 (FOOTINGS)	24.9 CU. YDS.
POUR #2 (COLUMNS)	14.1 CU. YDS.
POUR #3 (CAP)	30.2 CU. YDS.
TOTAL CLASS A CONCRETE	69.2 CU. YDS.

HP 12 x 53 STEEL PILES	
No. 21	1,785 LIN. FT.
PREDRILLING FOR PILES	173 LIN. FT.
FOUNDATION EXCAVATION	LUMP SUM
CONCRETE MEDALLION PANEL	1 EACH
CONCRETE STAINING	1,087.5 SQ. FT.

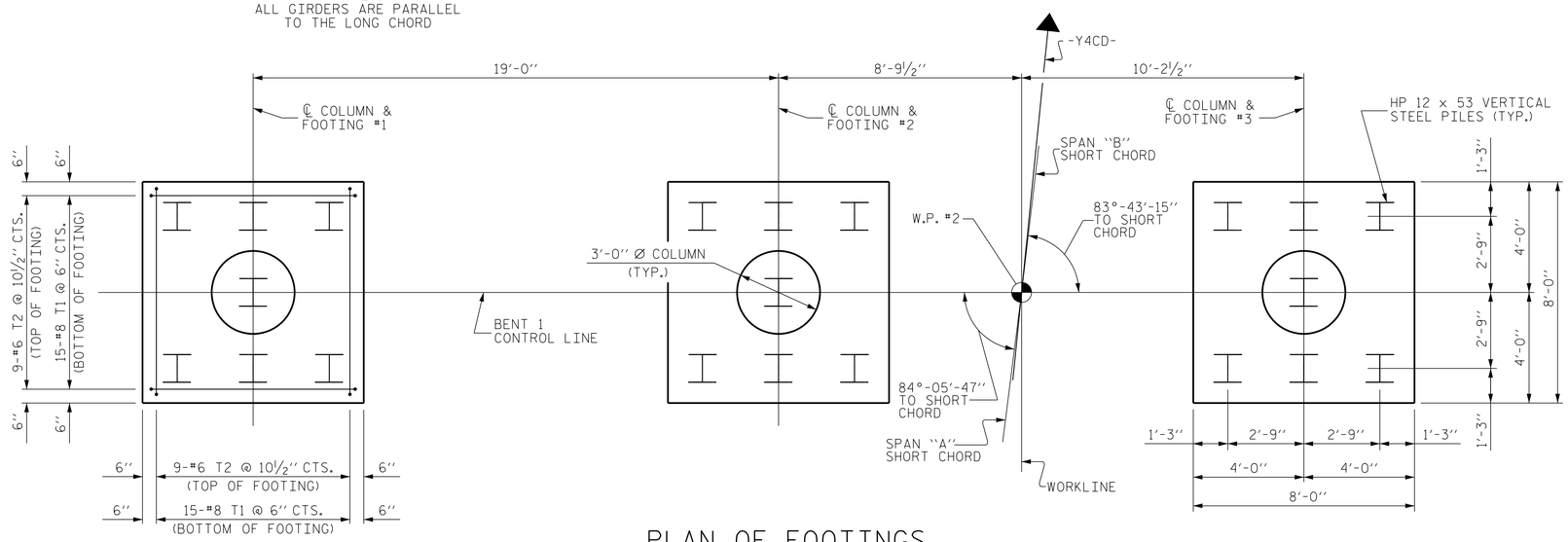

PLAN OF FOOTINGS

DIMENSIONS, REINFORCING STEEL AND PILE LAYOUT ARE TYPICAL FOR EACH FOOTING

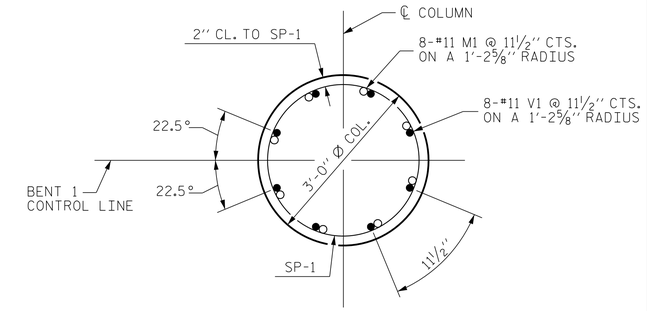

SECTION THRU COLUMN

(TYPICAL FOR EACH COLUMN)

PROJECT NO. U-2579B
FORSYTH COUNTY
STATION: 46+87.16-Y4CD-

SHEET 2 OF 2

STATE OF NORTH CAROLINA
DEPARTMENT OF TRANSPORTATION
RALEIGH

SUBSTRUCTURE

BENT 1

NORTH CAROLINA PROFESSIONAL SEAL 026891 ENGINEER JOHN T. DIFFEE III

WETHERILL ENGINEERING
559 Jones Franklin Rd. Suite 164
Raleigh, N.C. 27606
Bus: 919 851 8077
Fax: 919 851 8107
License: F-0377

TRANSPORTATION PLANNING/DESIGN - BRIDGE/STRUCTURE DESIGN
CIVIL/SITE DESIGN - GIS/GPS - CONSTRUCTION OBSERVATION

REVISIONS						SHEET NO.
NO.	BY:	DATE:	NO.	BY:	DATE:	S-463
1			3			TOTAL SHEETS
2			4			707

DRAWN BY : J.M. BRITT DATE : 3-20-14
CHECKED BY : B.C. HUNT DATE : 4-14-14
DESIGN ENGINEER OF RECORD : T. DIFFEE DATE : 4-15-14

P:\2013\13109.22 U-2579B\Structures\DGN\Str 12 Y4CDN\2579B_SD_STR12_BT1_WE1.dgn
7/10/2014 2:17:34 PM