DocuSign Envelope ID: 6391EFB2-3537-460D-944E-DBFAE7256BD3

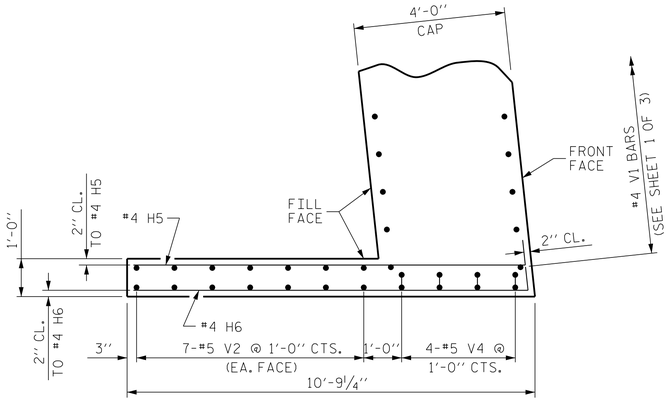

PLAN OF WING (W3)

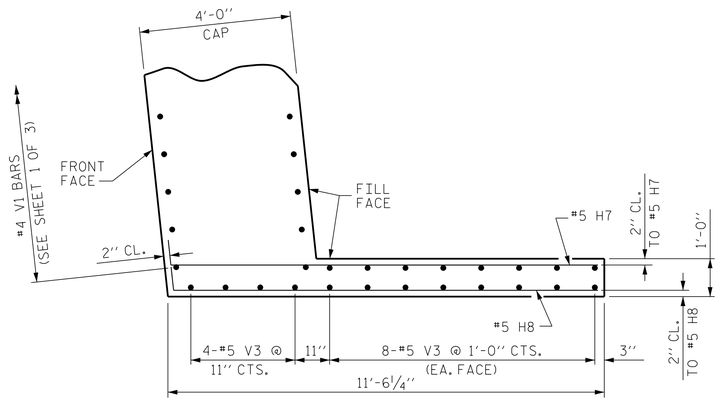

PLAN OF WING (W4)

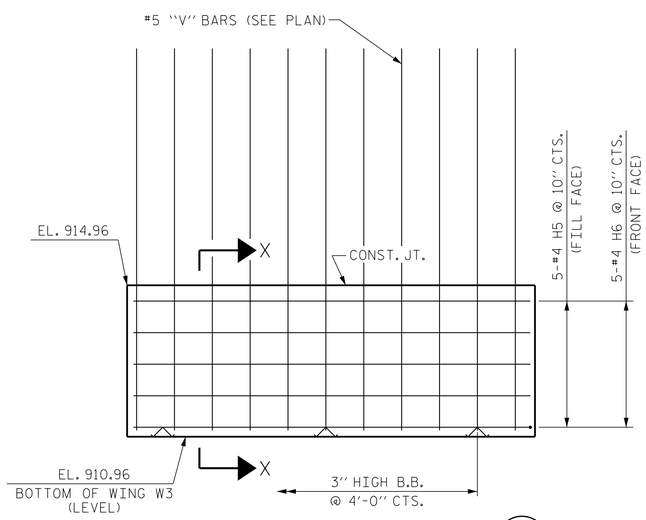

ELEVATION OF WING (W3)

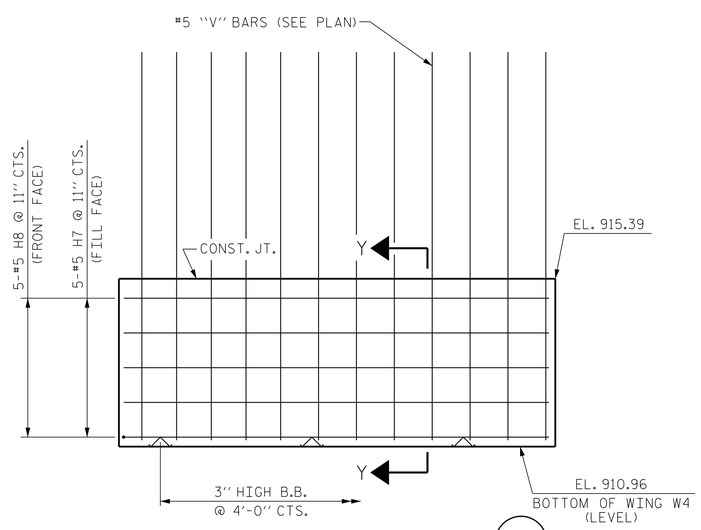

ELEVATION OF WING (W4)

BILL OF MATERIAL

END BENT 2

BAR	No.	SIZE	TYPE	LENGTH	WEIGHT
B1	12	#9	1	35'-6''	1448
B2	12	#10	1	35'-3''	1820
B3	12	#4	STR	17'-0''	136
B4	6	#5	STR	59'-11''	375
B5	12	#4	STR	21'-7''	173
B6	15	#4	STR	3'-8''	37
H5	5	#4	7	10'-9''	36
H6	5	#4	7	10'-10''	36
H7	5	#5	6	12'-1''	63
H8	5	#5	6	12'-0''	63
S1	56	#5	2	11'-10''	691
S2	56	#5	5	4'-7''	268
S3	36	#4	4	6'-6''	156
U1	21	#4	3	6'-8''	94
V1	96	#4	STR	6'-5''	411
V2	14	#5	STR	10'-1''	147
V3	20	#5	STR	10'-6''	219
V4	4	#5	8	10'-3''	43

REINFORCING STEEL	6,216 LBS.
CLASS A CONCRETE	42.2 CU. YDS.
HP 12 x 53 STEEL PILES No. 9	795 LIN. FT.
CONCRETE STAINING	198.6 SQ. FT.

BAR TYPES

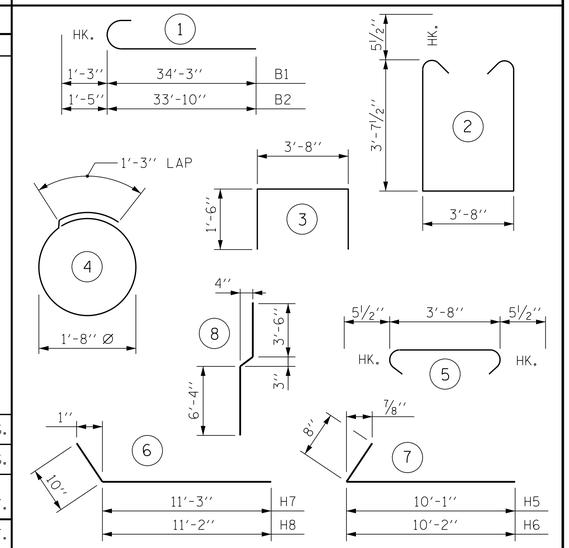

ALL BAR DIMENSIONS ARE OUT TO OUT.

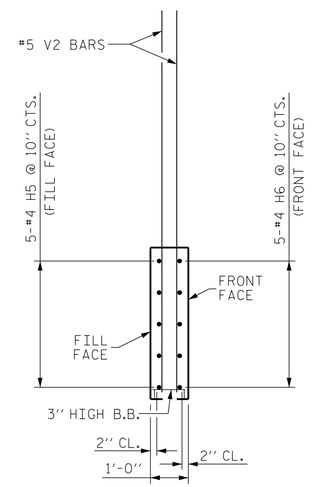

SECTION X-X

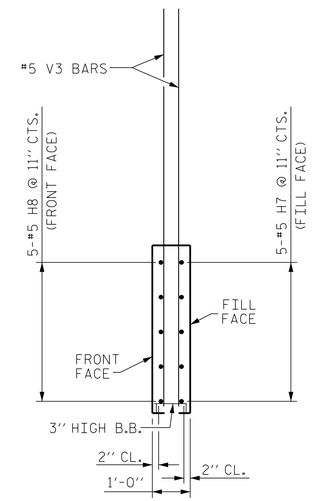

SECTION Y-Y

PROJECT NO. U-2579B
FORSYTH COUNTY
STATION: 46+87.16-Y4CD-

SHEET 3 OF 3

STATE OF NORTH CAROLINA
DEPARTMENT OF TRANSPORTATION
RALEIGH

SUBSTRUCTURE

INTEGRAL END BENT 2

NORTH CAROLINA PROFESSIONAL SEAL 026891 ENGINEER JOHN T. DIFFEE

WETHERILL ENGINEERING
559 Jones Franklin Rd. Suite 164
Raleigh, N.C. 27606
Bus: 919 851 8077
Fax: 919 851 8107
License: F-0377
TRANSPORTATION PLANNING/DESIGN - BRIDGE/STRUCTURE DESIGN
CIVIL/SITE DESIGN - GIS/GPS - CONSTRUCTION OBSERVATION

REVISIONS							SHEET NO.
NO.	BY:	DATE:	NO.	BY:	DATE:		S-466
1			3				TOTAL SHEETS
2			4				707

DRAWN BY : J.M. BRITT DATE : 2-27-14
CHECKED BY : B.C. HUNT DATE : 4-9-14
DESIGN ENGINEER OF RECORD : I. DIFFEE DATE : 4-15-14

P:\2013\13109.22 U-2579B\Structures\DGN\Str 12 (Y4CD)U2579B_SD_STR12_EB2_WEI.dgn
7/10/2014 2:24:31 PM