DocuSign Envelope ID: 6391EFB2-3537-460D-944E-DBFAE7256BD3

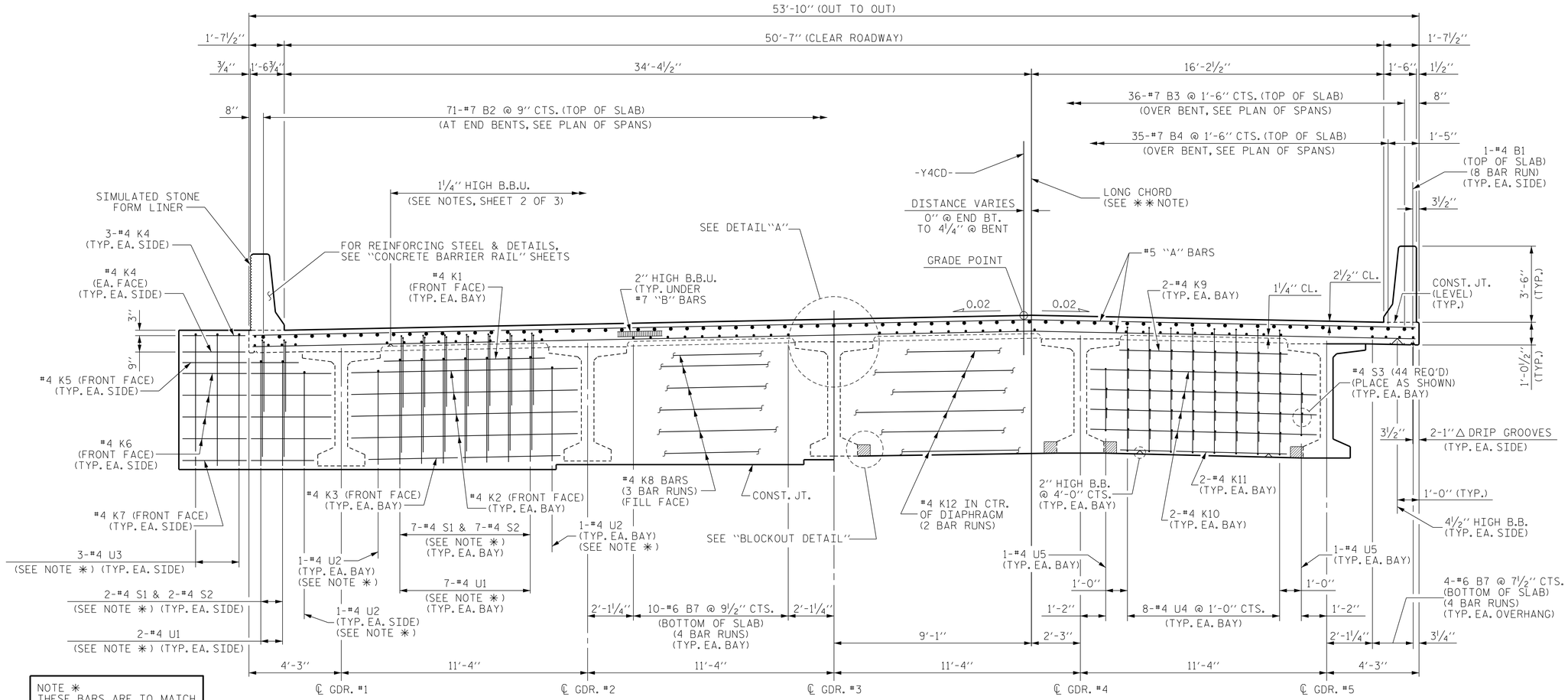

NOTE ✳
THESE BARS ARE TO MATCH
#4 "V" BARS IN END BENT

HALF SECTION - INTEGRAL END BENT DIAPHRAGM

HALF SECTION - BENT DIAPHRAGM

TYPICAL SECTION

✳✳ NOTE : GIRDERS AND OUTSIDE EDGES OF SUPERSTRUCTURE ARE PARALLEL TO THE LONG CHORD

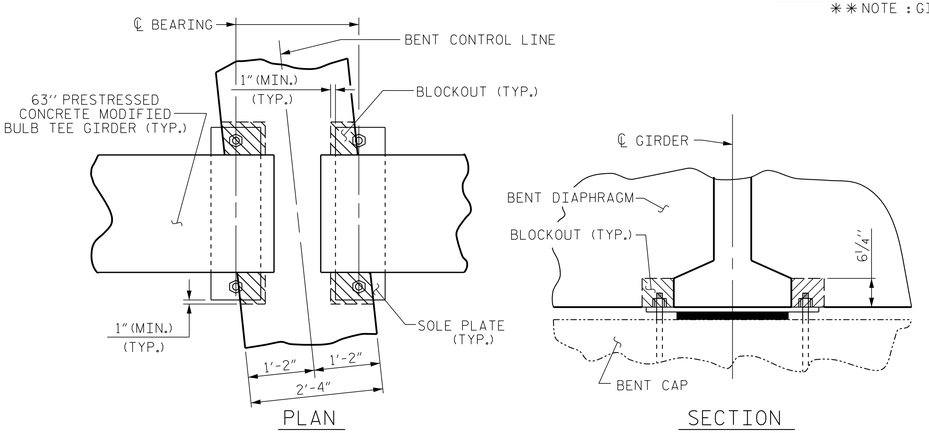

PLAN

SECTION

BENT DIAPHRAGM BLOCK-OUT DETAIL

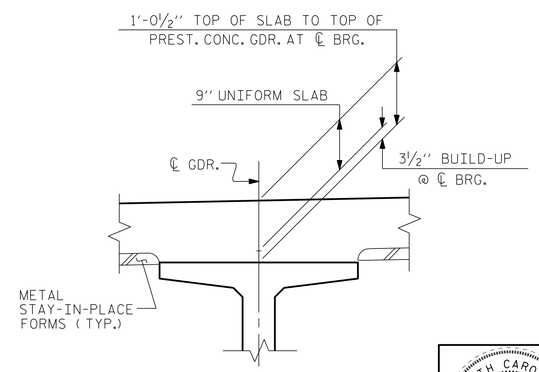

DETAIL "A"

PROJECT NO. U-2579B
FORSYTH COUNTY
STATION: 46+87.16-Y4CD-

SHEET 1 OF 3

STATE OF NORTH CAROLINA
DEPARTMENT OF TRANSPORTATION
RALEIGH

SUPERSTRUCTURE
TYPICAL SECTION

NORTH CAROLINA PROFESSIONAL SEAL 026891 ENGINEER JOHN T. DIFFEE III

WETHERILL ENGINEERING
559 Jones Franklin Rd. Suite 164
Raleigh, N.C. 27606
Bus: 919 851 8077
Fax: 919 851 8107
License: F-0377
TRANSPORTATION PLANNING/DESIGN - BRIDGE/STRUCTURE DESIGN
CIVIL/SITE DESIGN - GIS/GPS - CONSTRUCTION OBSERVATION

REVISIONS						SHEET NO.
NO.	BY:	DATE:	NO.	BY:	DATE:	S-439
1			3			TOTAL SHEETS
2			4			707

DRAWN BY : J.M. BRITT DATE : 9-18-13
CHECKED BY : B.C. HUNT DATE : 4-1-14
DESIGN ENGINEER OF RECORD : T. DIFFEE DATE : 4-15-14

P:\2013\13109.22 U-2579B\Structures\DGN\Str 12 (Y4CD)U2579B_SD_STR12_TS_WEI.dgn
7/10/2014 1:35:35 PM