DocuSign Envelope ID: DCEEA0B7-39B2-49E8-AC7B-6AF12133FC7D

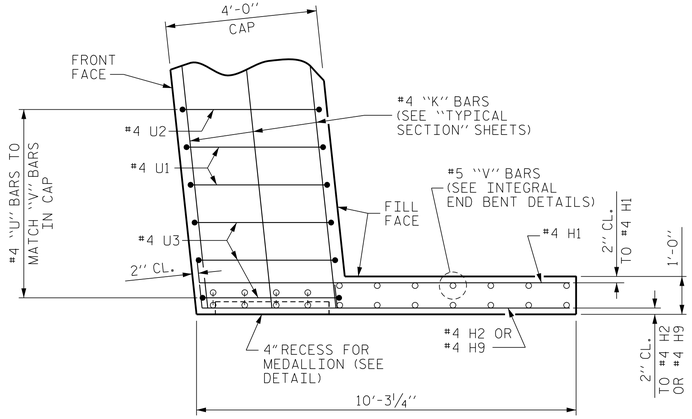

PLAN OF WING (W1)

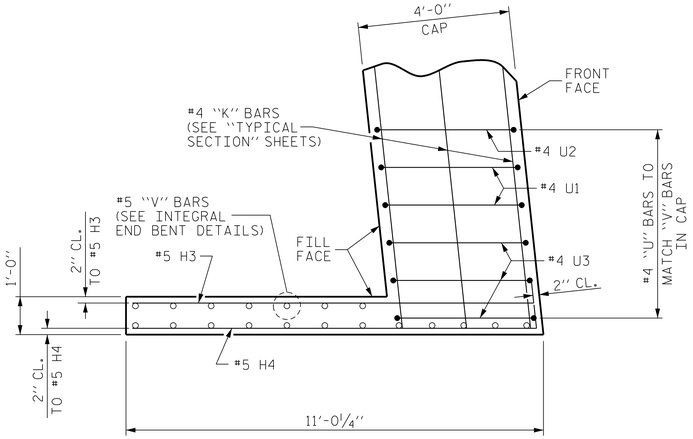

PLAN OF WING (W2)

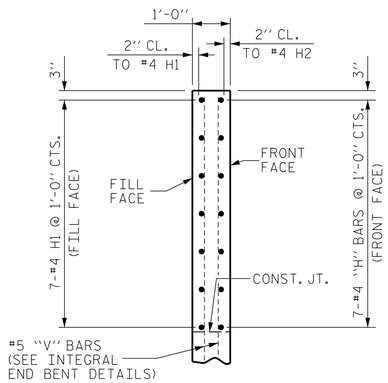

SECTION W-W

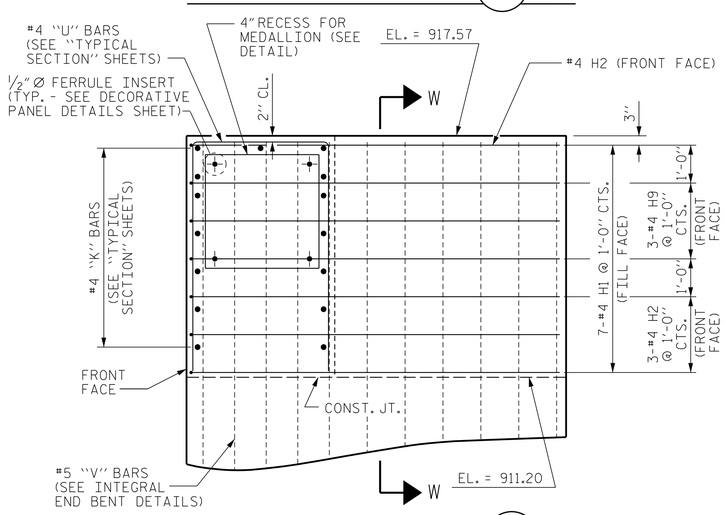

ELEVATION OF WING (W1)

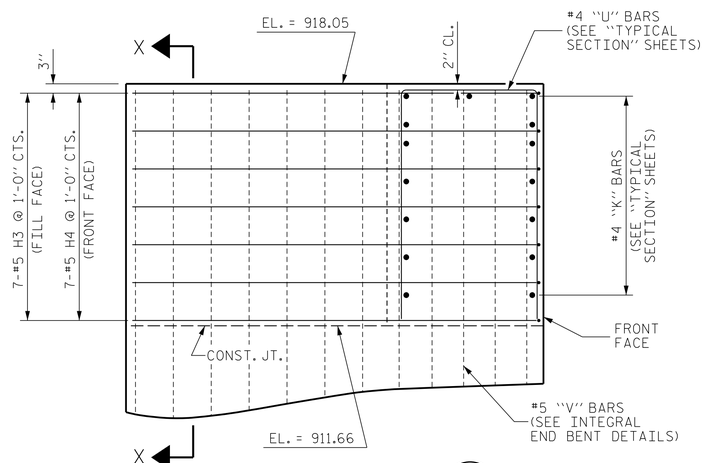

ELEVATION OF WING (W2)

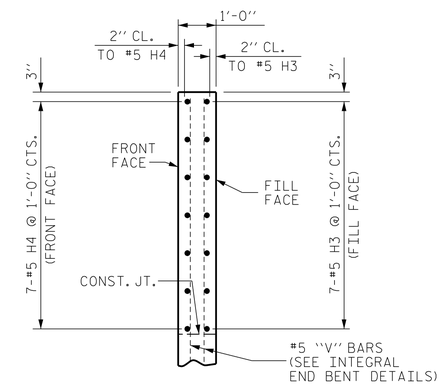

SECTION X-X

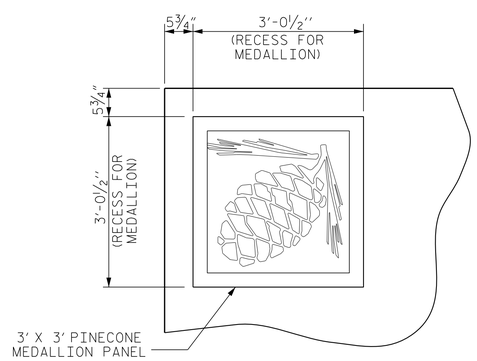

ELEVATION

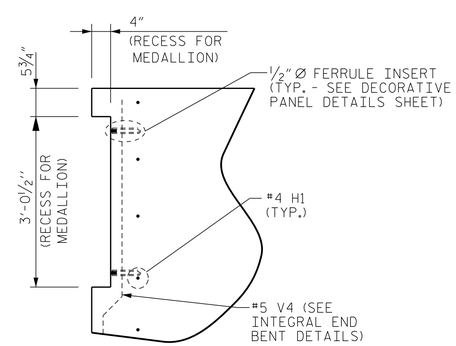

SECTION THRU CAP

MEDALLION DETAIL

LEFT END OF END BENT CAP

NOTES :

FOR CONCRETE MEDALLION PANEL, SEE SPECIAL PROVISION FOR CONCRETE MEDALLION PANEL. VECTOR FILE FOR PINECONE MEDALLION WILL BE PROVIDED TO CONTRACTOR.

SHIFT OR BEND SLIGHTLY, "H", "V", OR "U" BARS AS REQUIRED TO CLEAR RECESS FOR PINECONE MEDALLION.

FOR PINECONE MEDALLION DETAILS, SEE DECORATIVE PANEL DETAILS SHEET (SHEET NO. S-463A).

PROJECT NO. U-2579B
FORSYTH COUNTY
STATION: 46+87.16-Y4CD-

SHEET 3 OF 4

STATE OF NORTH CAROLINA
DEPARTMENT OF TRANSPORTATION
RALEIGH

SUPERSTRUCTURE

PLAN OF SPAN

DETAILS @ END BENT 1

NORTH CAROLINA PROFESSIONAL SEAL 026891 ENGINEER JOHN T. DIFFEE

WETHERILL ENGINEERING
559 Jones Franklin Rd. Suite 164
Raleigh, N.C. 27606
Bus: 919 851 8077
Fax: 919 851 8107
License: F-0377
TRANSPORTATION PLANNING/DESIGN - BRIDGE/STRUCTURE DESIGN
CIVIL/SITE DESIGN - GIS/GPS - CONSTRUCTION OBSERVATION

REVISIONS						SHEET NO.
NO.	BY:	DATE:	NO.	BY:	DATE:	S-444
1			3			TOTAL SHEETS
2			4			707

DRAWN BY : J.M. BRITT DATE : 1-21-14
CHECKED BY : B.C. HUNT DATE : 4-1-14
DESIGN ENGINEER OF RECORD : T. DIFFEE DATE : 4-15-14

P:\2013\13109.22 U-2579B\Structures\DGN\Str 12 (Y4CD)\U2579B_SD_STR12_PS_WE1.dgn
8/7/2014 7:40:11 AM