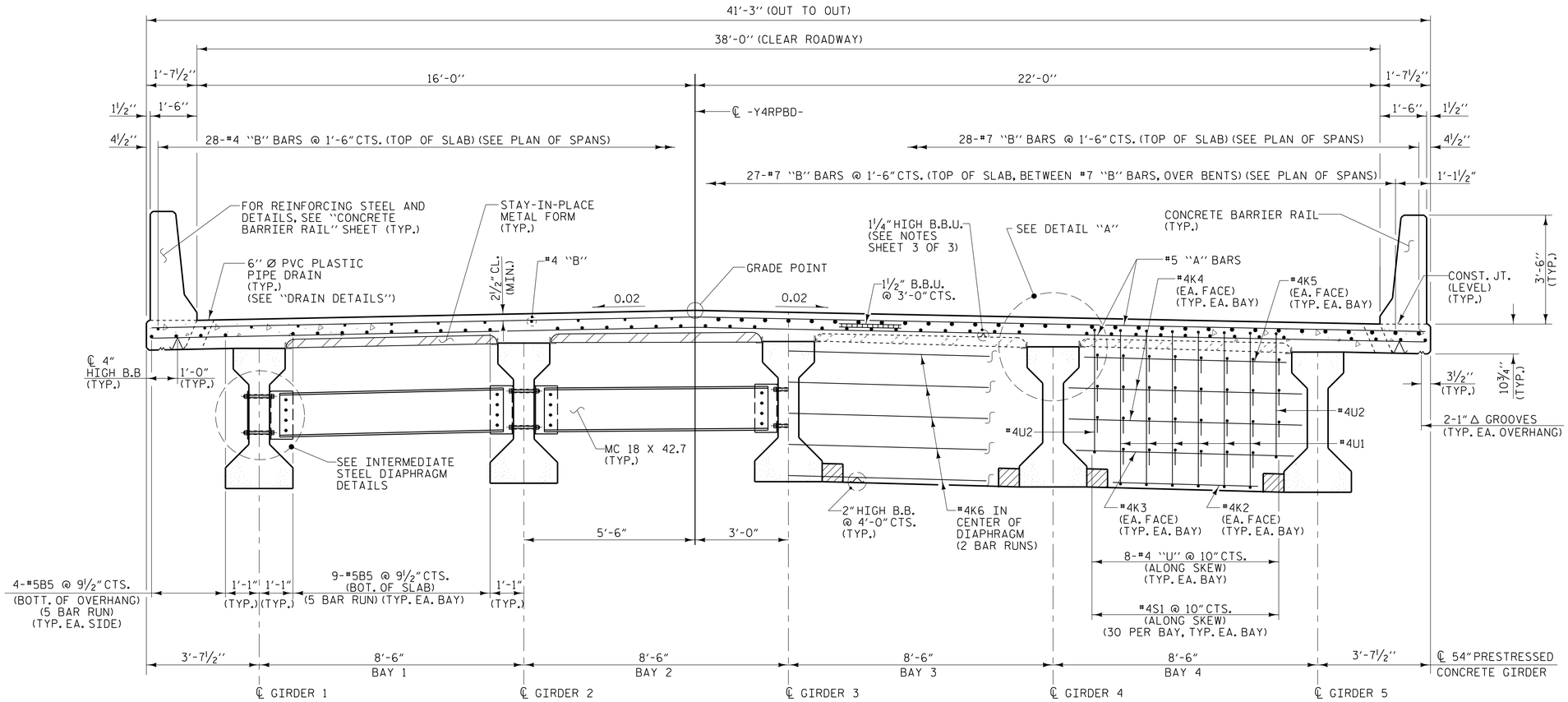

HALF TYPICAL SECTION

SHOWING INTERMEDIATE DIAPHRAGMS

HALF TYPICAL SECTION

SHOWING BENT DIAPHRAGMS

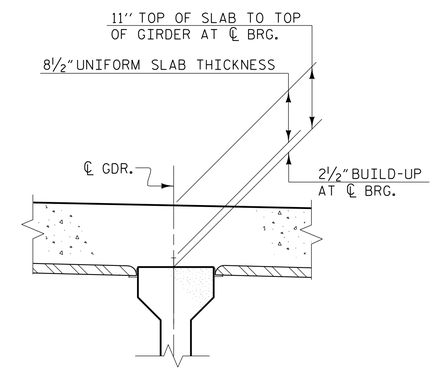

DETAIL "A"

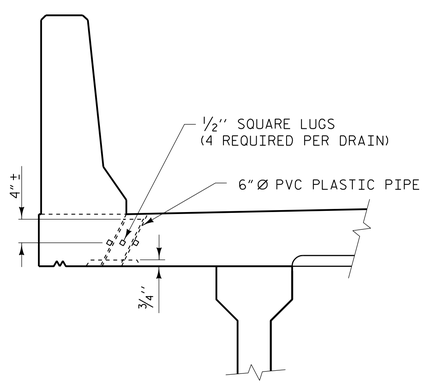

ELEVATION

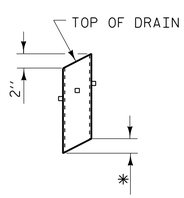

* TO BE SET TO MATCH SLOPE OF BOTTOM OF OVERHANG (30 DRAINS REQUIRED)

PIPE DETAIL

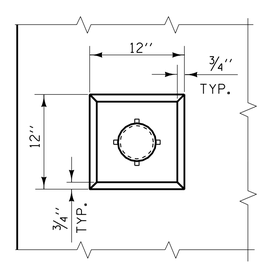

PLAN OF RECESS

DRAIN DETAILS

NOTES

TOP OF FLOOR DRAINS TO BE SET ⅜" BELOW SURFACE OF SLAB.

4 - ½" SQUARE LUGS TO BE GLUED TO THE P.V.C. PLASTIC PIPE AT EQUAL SPACES AROUND THE PIPE DRAIN APPROXIMATELY 4" FROM THE TOP OF THE PIPE.

THE 6" Ø PVC PLASTIC PIPE AND FITTINGS SHALL BE SCHEDULE 40 AND CONFORM TO ASTM D1785.

PROJECT NO. U-2579B
FORSYTH COUNTY
STATION: 26+60.00 -Y4RPBD-

SHEET 1 OF 3

STATE OF NORTH CAROLINA
DEPARTMENT OF TRANSPORTATION
RALEIGH

SUPERSTRUCTURE

TYPICAL SECTION

PLANS PREPARED BY:
MULKEY ENGINEERS & CONSULTANTS
PO Box 33127
RALEIGH, N.C. 27636
(919) 851-1912
(919) 851-1918 (FAX)
WWW.MULKEYINC.COM
NC LICENSE NO. C-1021

NORTH CAROLINA PROFESSIONAL SEAL 034352 ENGINEER TERRY R. PETERSON
5/27/2014
DocuSigned by: Terry R. Peterson
6DC4171647CD40F...

DWG. NO. RPBD-5

REVISIONS							
NO.	BY:	DATE:	NO.	BY:	DATE:	SHEET NO.	
1			3			S-402	
2			4			TOTAL SHEETS	
						707	

STR #11

DRAWN BY :	W. B. ALLEN	DATE :	4/13
CHECKED BY :	T. R. PETERSON	DATE :	6/13
DESIGN ENGINEER OF RECORD:	T. R. PETERSON	DATE :	5/27/14

5/27/2014 10:22 AM R:\Structures\U-2579B_Ramp BD\U-2579B_RPBD_SD_TS_01.dgn