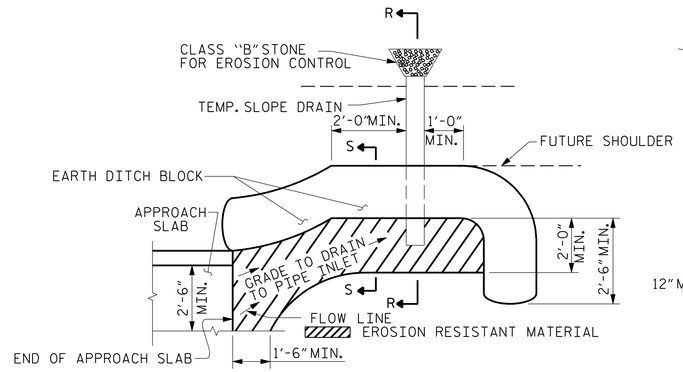

NOTE: IMMEDIATELY AFTER THE CONSTRUCTION OF THE APPROACH SLAB, THE CONTRACTOR SHALL PROVIDE TEMPORARY BERM AND SLOPE DRAIN. CONTRACTOR SHALL GRADE TO PIPE INLET AND PROVIDE EROSION RESISTANT MATERIAL AS SHOWN. THE EROSION RESISTANT MATERIAL SHALL BE EITHER 1) ASPHALT PLANT MIX, TYPE 1 OR TYPE 2, MIN. 2" DEPTH, 2) EROSION CONTROL MAT, OR 3) CONCRETE, AS DIRECTED BY THE ENGINEER. THE SLOPE DRAIN SHALL CONSIST OF A NON-PERFORATED TEMPORARY DRAINAGE PIPE, 12 INCHES IN DIAMETER.

PLAN VIEW

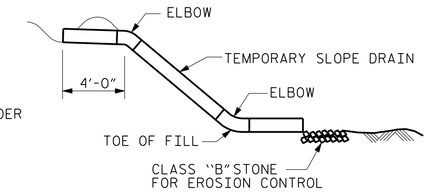

SECTION R-R

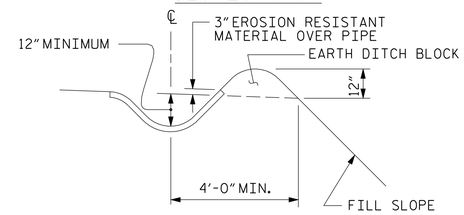

SECTION S-S

TEMPORARY BERM AND SLOPE DRAIN DETAILS

(TO BE USED WHEN SHOULDER BERM GUTTER IS REQUIRED)

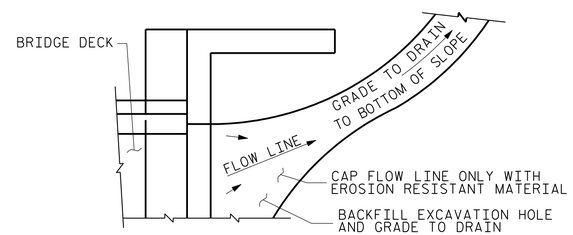

NOTE: IF THE APPROACH SLAB IS NOT CONSTRUCTED IMMEDIATELY AFTER THE BACKFILLING OF THE END BENT EXCAVATION, GRADE TO DRAIN TO THE BOTTOM OF THE SLOPE AND PROVIDE EROSION RESISTANT MATERIAL, SUCH AS FIBERGLASS ROVING OR AS DIRECTED BY THE ENGINEER TO PREVENT SOIL EROSION AND TO PROTECT THE AREA ADJACENT TO THE STRUCTURE. THE CONTRACTOR WILL BE REQUIRED TO REMOVE THESE MATERIALS PRIOR TO CONSTRUCTION OF THE APPROACH SLAB.

TEMPORARY DRAINAGE DETAIL

PROJECT NO. U-2579B

FORSYTH COUNTY

STATION: 26+60.00 -Y4RPBD-

SHEET 2 OF 2

PLANS PREPARED BY:

MULKEY ENGINEERS & CONSULTANTS
PO Box 33127
Raleigh, N.C. 27636
(919) 851-1912
(919) 851-1918 (FAX)
WWW.MULKEYINC.COM
NC LICENSE NO. C-1021

THIS STANDARD DRAWING REVIEWED & ADOPTED FOR USE AT THE REFERENCED LOCATION BY THE UNDERSIGNED:

NORTH CAROLINA PROFESSIONAL SEAL 034352 ENGINEER TERRY R. PETERSON

DocuSigned by: Terry R. Peterson 5/27/2014
6DC4171647CD40F...

DWG. NO. RPBD-36

STATE OF NORTH CAROLINA
DEPARTMENT OF TRANSPORTATION
RALEIGH

STANDARD

BRIDGE APPROACH
SLAB DETAILS

REVISIONS						SHEET NO.
NO.	BY:	DATE:	NO.	BY:	DATE:	S-433
1			3			TOTAL SHEETS
2			4			707

STR #11

STD. NO. BAS4

ASSEMBLED BY : W. B. ALLEN		DATE : 6/13	
CHECKED BY : T. R. PETERSON		DATE : 6/13	
DRAWN BY : FCJ	11/88	REV. 10/1/11	MAA/GM
CHECKED BY : ARB	11/88	REV. 7/12	MAA/GM
		REV. 6/13	MAA/GM

5/27/2004 11:23:11 AM R:\Structures\U-2579B Ramp BD\U-2579B_RPBD_S0_A5_02.dgn