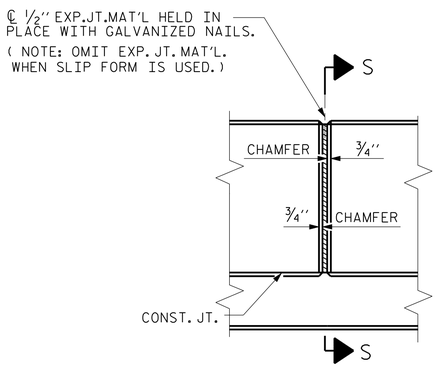

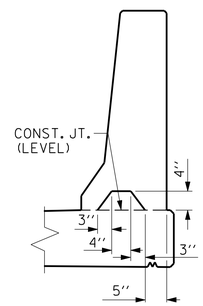

SECTION S-S
AT DAM IN OPEN JOINT
(THIS IS TO BE USED ONLY WHEN SLIP FORM IS USED)

ELEVATION AT EXPANSION JOINTS

BARRIER RAIL DETAILS

NOTES

THE BARRIER RAIL IN A CONTINUOUS UNIT SHALL NOT BE CAST UNTIL ALL SLAB CONCRETE IN THAT UNIT HAS BEEN CAST AND HAS REACHED A MINIMUM COMPRESSIVE STRENGTH OF 3,000 PSI.

ALL REINFORCING STEEL IN BARRIER RAILS SHALL BE EPOXY COATED.

GROOVED CONTRACTION JOINTS, 1/2" IN DEPTH, SHALL BE TOOLED IN ALL EXPOSED FACES OF THE BARRIER RAIL AND IN ACCORDANCE WITH ARTICLE 825-10(B) OF THE STANDARD SPECIFICATIONS. THE CONTRACTION JOINT SHALL BE LOCATED AT EACH THIRD POINT BETWEEN BARRIER RAIL EXPANSION JOINTS. ONLY ONE CONTRACTION JOINT IS REQUIRED AT MIDPOINT OF BARRIER RAIL SEGMENTS LESS THAN 20 FEET IN LENGTH AND NO CONTRACTION JOINTS ARE REQUIRED FOR THOSE SEGMENTS LESS THAN 10 FEET IN LENGTH.

BAR TYPES

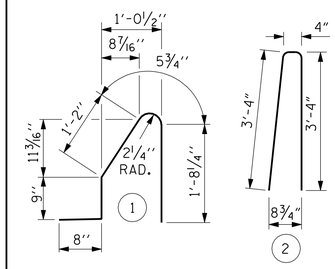

ALL BAR DIMENSIONS ARE OUT TO OUT

BILL OF MATERIAL

FOR CONCRETE BARRIER RAIL ONLY

BAR	NO.	SIZE	TYPE	LENGTH	WEIGHT
* B1	110	#5	STR	26'-3"	3012
* B2	88	#5	STR	14'-11"	1369
* B3	66	#5	STR	25'-2"	1732
* S1	524	#5	1	4'-9"	2596
* S2	524	#5	2	7'-0"	3826

* EPOXY COATED REINFORCING STEEL	12,535 LBS.
CLASS AA CONCRETE	71.2 CU. YDS.
CONCRETE BARRIER RAIL	524.92 LIN. FT.

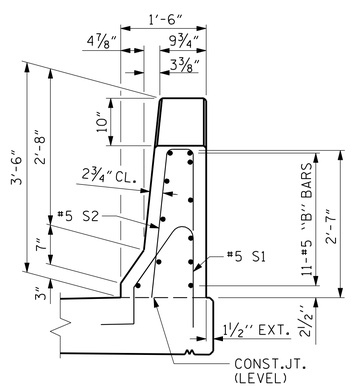

END VIEW

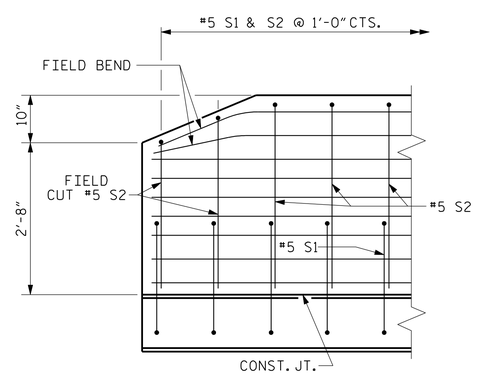

SIDE VIEW

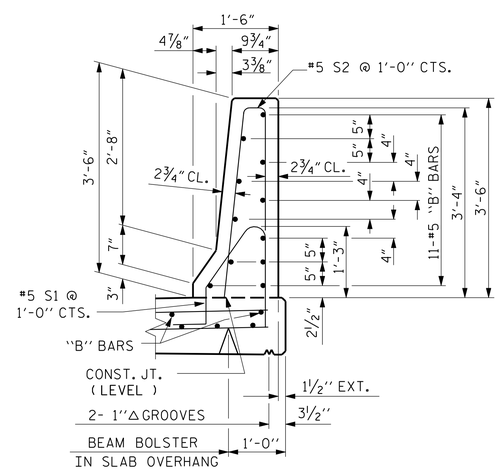

SECTION THRU RAIL

END OF RAIL DETAILS

PROJECT NO. U-2579B
FORSYTH COUNTY
STATION: 26+60.00 -Y4RPBD-

SHEET 2 OF 2

PLANS PREPARED BY:
MULKEY ENGINEERS & CONSULTANTS
PO Box 33127
Raleigh, N.C. 27636
(919) 851-1912
(919) 851-1918 (FAX)
WWW.MULKEYINC.COM
NC LICENSE NO. C-1051

THIS STANDARD DRAWING REVIEWED & ADOPTED FOR USE AT THE REFERENCED LOCATION BY THE UNDERSIGNED:

NORTH CAROLINA PROFESSIONAL SEAL 034352 ENGINEER TERRY R. PETERSON

DocuSigned by: Terry R. Peterson 5/27/2014
6DC417164 7CD40F...

DWG. NO. RPBD-21

STATE OF NORTH CAROLINA
DEPARTMENT OF TRANSPORTATION
RALEIGH

STANDARD
CONCRETE BARRIER RAIL

REVISIONS						SHEET NO.
NO.	BY:	DATE:	NO.	BY:	DATE:	S-418
1			3			TOTAL SHEETS
2			4			707

STR #11

STD. NO. CBR1 (SHT 2)

ASSEMBLED BY :	W. B. ALLEN	DATE :	4/13
CHECKED BY :	T. R. PETERSON	DATE :	6/13

DRAWN BY :	ARB	5/87	REV. 10/1/11	MAA/GM
CHECKED BY :	SJD	9/87	REV. 7/12	MAA/GM
			REV. 6/13	MAA/GM

5/27/2004 10:59:55 AM R:\Structures\U-2579B_Ramp BD\U-2579B_RPBD_S0_BR_02.dgn