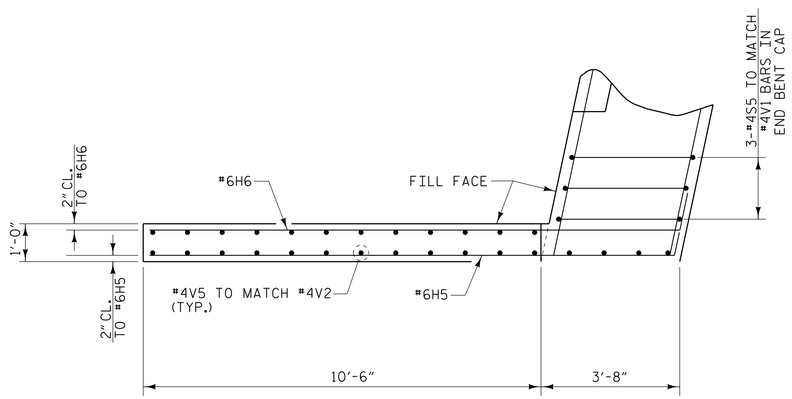

PLAN OF LEFT WING

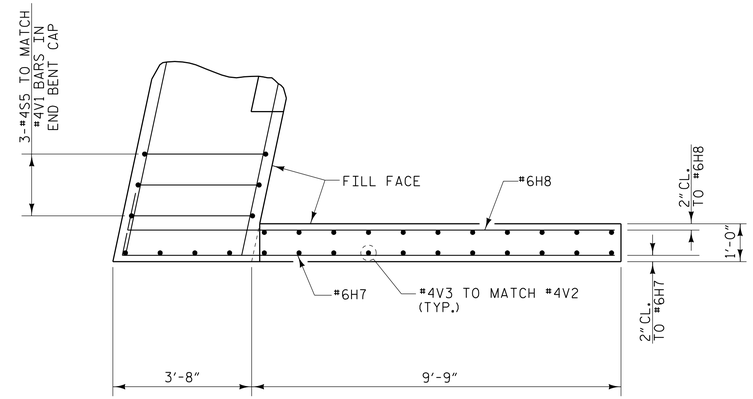

PLAN OF RIGHT WING

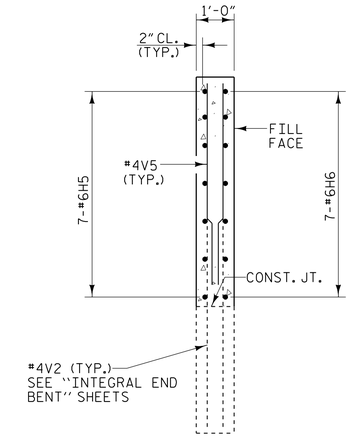

SECTION A-A

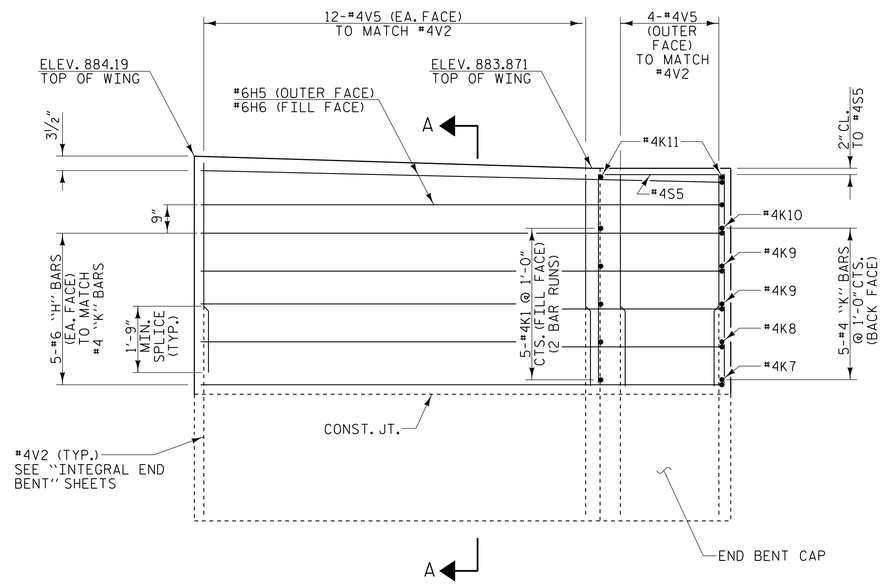

ELEVATION OF LEFT WING

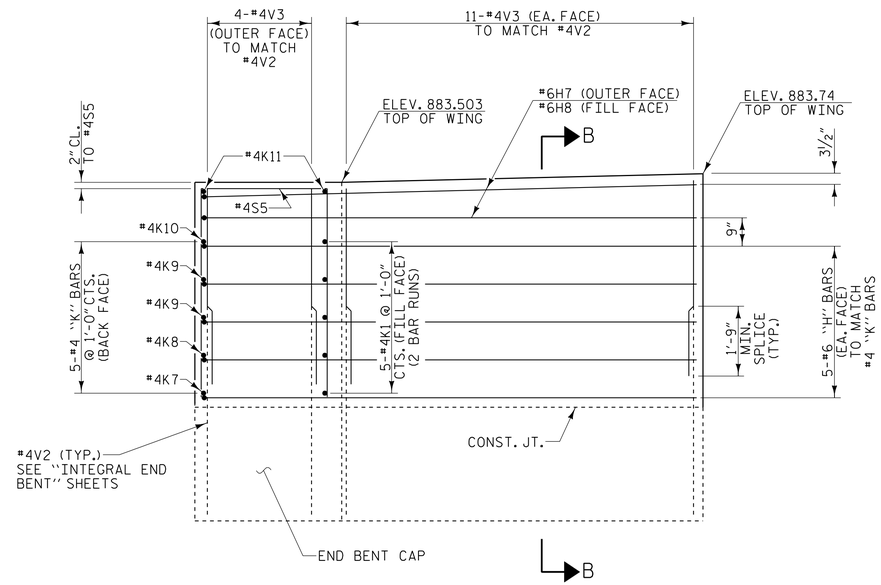

ELEVATION OF RIGHT WING

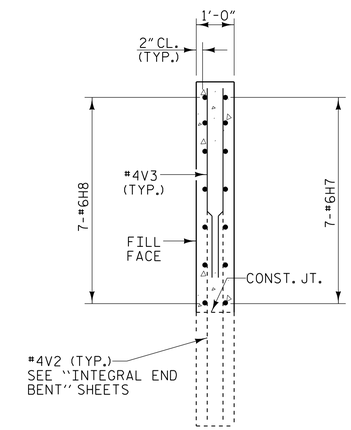

SECTION B-B

PROJECT NO. U-2579B

FORSYTH COUNTY

STATION: 26+60.00 -Y4RPBD-

SHEET 5 OF 5

STATE OF NORTH CAROLINA
DEPARTMENT OF TRANSPORTATION
RALEIGH

PLAN OF SPANS WING DETAILS

(END BENT #2)

END BENT #2

PLANS PREPARED BY:

MULKEY ENGINEERS & CONSULTANTS
PO BOX 33127
RALEIGH, N.C. 27636
(919) 851-1912
(919) 851-1918 (FAX)
WWW.MULKEYINC.COM
NC LICENSE NO. C-1021

NORTH CAROLINA PROFESSIONAL SEAL 034352 ENGINEER TERRY R. PETERSON

5/27/2014

DocuSigned by: Terry R. Peterson
6DC4171647CD40F...

DWG. NO. RPBD-12

REVISIONS						
NO.	BY:	DATE:	NO.	BY:	DATE:	
1			3			
2			4			

SHEET NO. S-409

TOTAL SHEETS 707

STR #11

DRAWN BY :	W. B. ALLEN	DATE :	5/13
CHECKED BY :	T. R. PETERSON	DATE :	6/13
DESIGN ENGINEER OF RECORD:	T. R. PETERSON	DATE :	5/27/14

5/27/2004 11:23:18 AM R:\Structures\U-2579B Ramp BD\U-2579B_RPBD_S0_S5_06.dgn