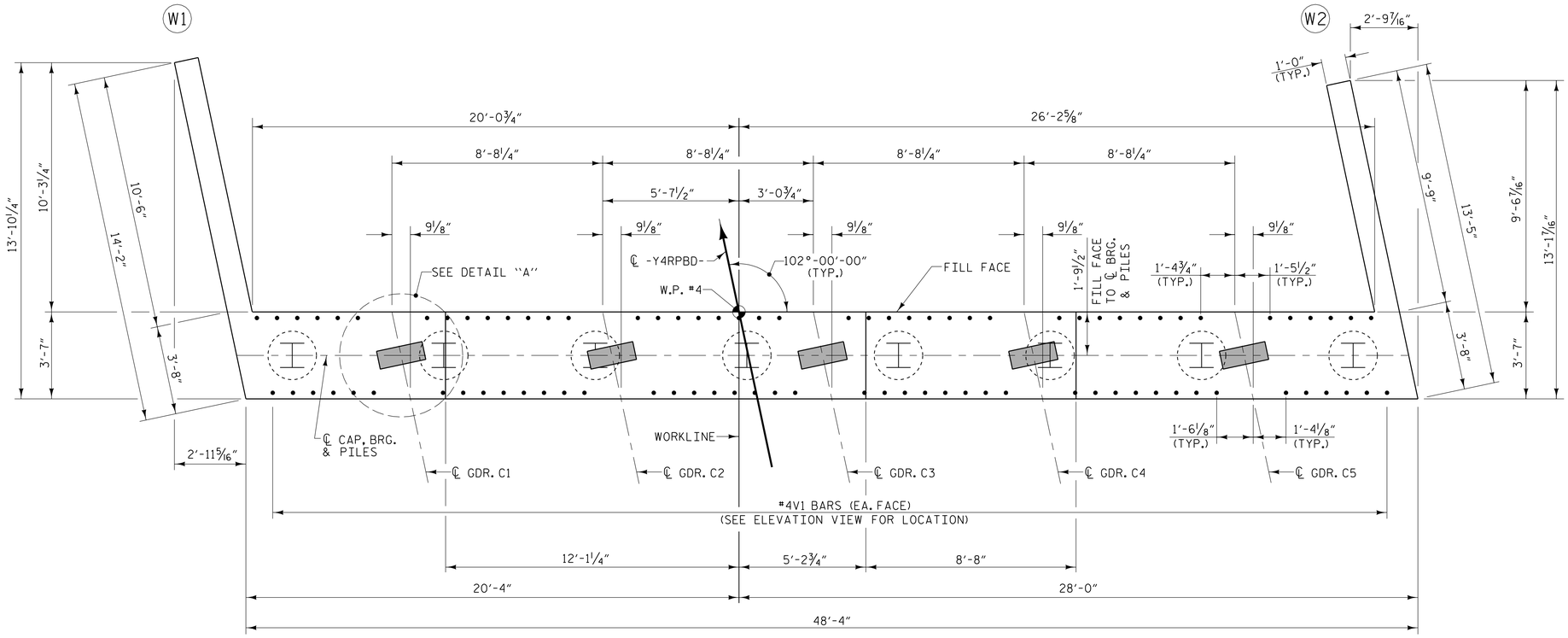

PLAN

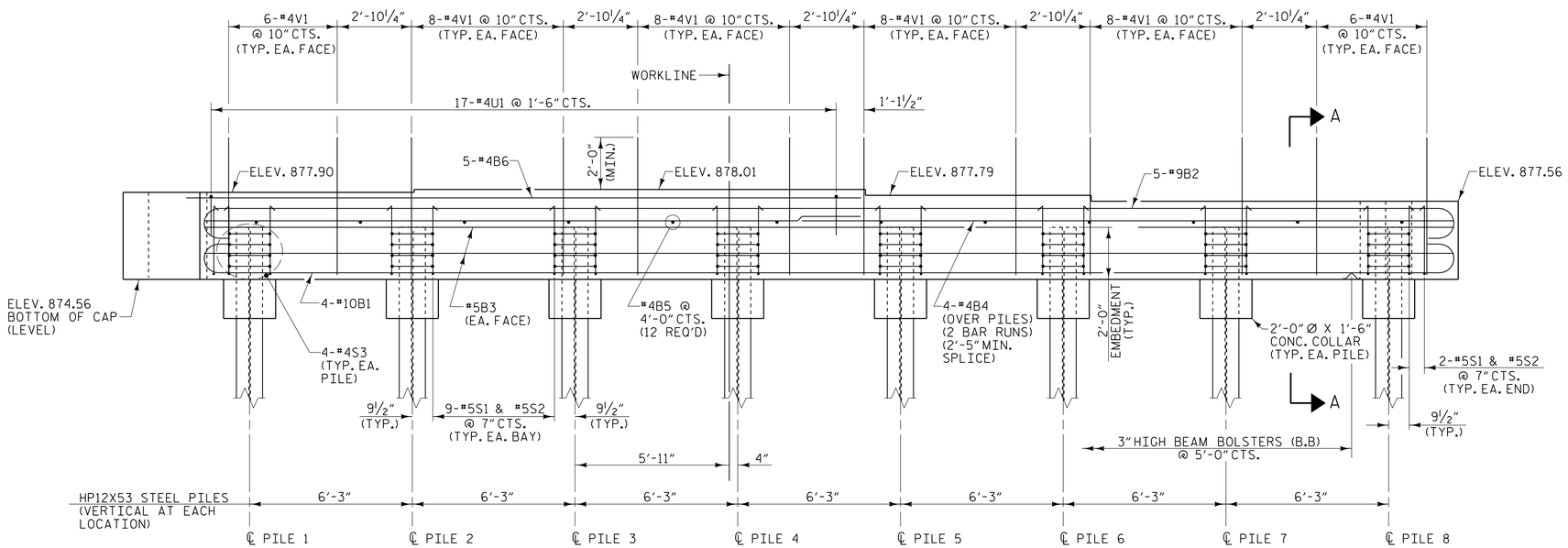

ELEVATION

NOTES

SEE SUPERSTRUCTURE SHEETS FOR UPPER PART OF INTEGRAL END BENT DETAILS.

THE CONTRACTOR SHALL PROVIDE FOR INSTALLATION OF THE 4" DIAMETER DRAIN PIPE THROUGH THE WING WALL AS REQUIRED FOR REINFORCED BRIDGE APPROACH FILLS. SEE ROADWAY PLANS. REINFORCING STEEL IN THE WING WALL MAY BE SHIFTED AS NECESSARY TO CLEAR THE DRAIN PIPE.

#4U1 BARS IN CAP MAY BE SHIFTED AS NECESSARY TO CLEAR #4V1 BARS.

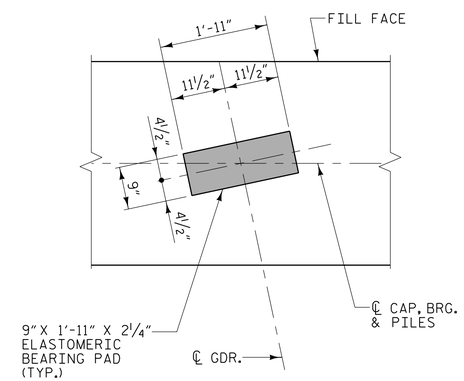

DETAIL "A"

(TYP. EACH GIRDER)

PROJECT NO. U-2579B

FORSYTH COUNTY

STATION: 26+60.00 -Y4RPBD-

SHEET 1 OF 3

STATE OF NORTH CAROLINA
DEPARTMENT OF TRANSPORTATION
RALEIGH

SUBSTRUCTURE

INTEGRAL END BENT #2

REVISIONS							SHEET NO.
NO.	BY:	DATE:	NO.	BY:	DATE:		S-428
1			3				TOTAL SHEETS
2			4				707

DWG. NO. RPBD-31

STR #11

NORTH CAROLINA PROFESSIONAL SEAL 034352 ENGINEER TERRY R. PETERSON 5/27/2014

DocuSigned by: Terry R. Peterson 6DC417716470D40F...

PLANS PREPARED BY:

MULKEY ENGINEERS & CONSULTANTS
PO Box 33127
RALEIGH, N.C. 27636
(919) 851-1912
(919) 851-1918 (FAX)
WWW.MULKEYINC.COM
NC LICENSE NO. C-1021

DRAWN BY :	W. B. ALLEN	DATE :	11/13
CHECKED BY :	T. R. PETERSON	DATE :	11/13
DESIGN ENGINEER OF RECORD:	T. R. PETERSON	DATE :	5/27/14

5/27/2014 11:30:52 AM R:\Structures\U-2579B Ramp BD\U-2579B_RPBD_S0_E2_01.dgn