SUPERSTRUCTURE REINFORCING STEEL LENGTHS ARE BASED ON THE FOLLOWING MINIMUM SPLICE LENGTHS

BAR SIZE	SUPERSTRUCTURE EXCEPT APPROACH SLABS, PARAPET, AND BARRIER RAIL		APPROACH SLABS		PARAPET AND BARRIER RAIL
	EPOXY COATED	UNCOATED	EPOXY COATED	UNCOATED	
#4	2'-0"	1'-9"	2'-0"	1'-9"	2'-9"
#5	2'-6"	2'-2"	2'-6"	2'-2"	3'-5"
#6	3'-0"	2'-7"	3'-10"	2'-7"	4'-4"
#7	5'-3"	3'-6"			
#8	6'-10"	4'-7"			

GROOVING BRIDGE FLOORS

APPROACH SLABS	1690	SQ. FT.
BRIDGE DECK	9174	SQ. FT.
TOTAL	10,864	SQ. FT.

BAR SCHEDULE

BAR	NO.	SIZE	TYPE	LENGTH	WEIGHT	BAR	NO.	SIZE	TYPE	LENGTH	WEIGHT	BAR	NO.	SIZE	TYPE	LENGTH	WEIGHT
✱ A1	467	#5	STR	40'-11"	19930	A209	2	#5	STR	20'-3"	42	K1	20	#4	STR	24'-11"	333
A2	467	#5	STR	40'-11"	19930	A210	2	#5	STR	17'-9"	37	K2	16	#4	STR	4'-11"	53
						A211	2	#5	STR	15'-2"	32	K3	24	#4	STR	7'-0"	112
✱ A101	2	#5	STR	40'-8"	85	A212	2	#5	STR	12'-8"	26	K4	48	#4	STR	7'-8"	246
✱ A102	2	#5	STR	38'-2"	80	A213	2	#5	STR	10'-1"	21	K5	24	#4	STR	6'-7"	106
✱ A103	2	#5	STR	35'-7"	74	A214	2	#5	STR	7'-7"	16	K6	20	#4	STR	19'-3"	257
✱ A104	2	#5	STR	33'-0"	69	A215	2	#5	STR	5'-0"	10	K7	4	#4	STR	5'-4"	14
✱ A105	2	#5	STR	30'-6"	64	A216	2	#5	STR	2'-5"	5	K8	4	#4	STR	5'-9"	15
✱ A106	2	#5	STR	27'-11"	58							K9	8	#4	STR	6'-1"	33
✱ A107	2	#5	STR	25'-5"	53	✱ B1	28	#7	STR	58'-0"	3319	K10	4	#4	STR	5'-7"	15
✱ A108	2	#5	STR	22'-10"	48	✱ B2	27	#7	STR	24'-0"	1325	K11	8	#4	STR	2'-8"	14
✱ A109	2	#5	STR	20'-3"	42	✱ B3	110	#7	STR	16'-0"	3597	K12	8	#4	STR	6'-1"	33
✱ A110	2	#5	STR	17'-9"	37	✱ B4	56	#4	STR	20'-5"	764						
✱ A111	2	#5	STR	15'-2"	32	B5	220	#5	STR	54'-2"	12429	S1	240	#4	3	2'-9"	441
✱ A112	2	#5	STR	12'-8"	26	✱ B6	28	#4	STR	26'-0"	486	✱ S2	76	#4	1	11'-5"	580
✱ A113	2	#5	STR	10'-1"	21	✱ B7	28	#7	STR	53'-3"	3048	✱ S3	76	#4	2	11'-11"	605
✱ A114	2	#5	STR	7'-7"	16	✱ B8	27	#7	STR	27'-5"	1513	✱ S4	72	#4	2	10'-9"	517
✱ A115	2	#5	STR	5'-0"	10	✱ B9	28	#7	STR	16'-10"	963	✱ S5	12	#4	1	14'-3"	114
✱ A116	2	#5	STR	2'-5"	5	✱ B10	56	#4	STR	28'-4"	1060						
												U1	48	#4	4	15'-10"	508
A201	2	#5	STR	40'-8"	85	H1	6	#6	5	14'-3"	128	U2	16	#4	4	13'-10"	148
A202	2	#5	STR	38'-2"	80	H2	6	#6	5	14'-1"	127						
A203	2	#5	STR	35'-7"	74	H3	6	#6	6	14'-1"	127	V3	50	#4	STR	5'-2"	173
A204	2	#5	STR	33'-0"	69	H4	6	#6	6	14'-3"	128	V4	26	#4	STR	4'-9"	82
A205	2	#5	STR	30'-6"	64	H5	7	#6	6	14'-10"	156	V5	28	#4	STR	5'-7"	104
A206	2	#5	STR	27'-11"	58	H6	7	#6	6	15'-0"	158	REINFORCING STEEL				LBS.	36882
A207	2	#5	STR	25'-5"	53	H7	7	#6	5	14'-0"	147	✱ EPOXY COATED REINFORCING STEEL				LBS.	38541
A208	2	#5	STR	22'-10"	48	H8	7	#6	5	13'-10"	145						

BAR TYPES

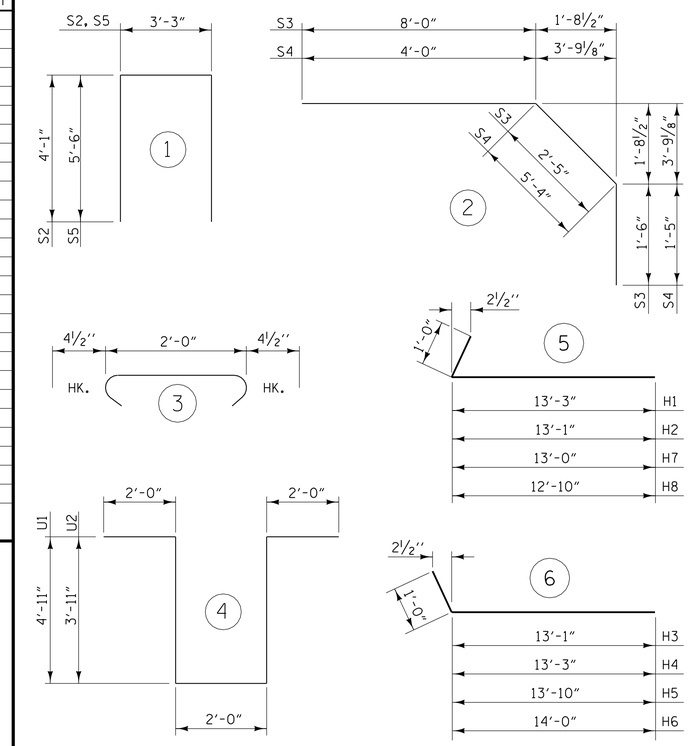

ALL BAR DIMENSIONS ARE OUT TO OUT

SUPERSTRUCTURE BILL OF MATERIAL

	CLASS AA CONCRETE	REINFORCING STEEL	✱ EPOXY COATED REINFORCING STEEL
	(CU. YDS.)	(LBS.)	(LBS.)
POUR 1	113.7		
POUR 2	113.5		
POUR 3	121.3		
POUR 4	80.6		
✱✱ TOTALS	429.1	36882	38541

✱✱ QUANTITIES FOR BARRIER RAIL ARE NOT INCLUDED.

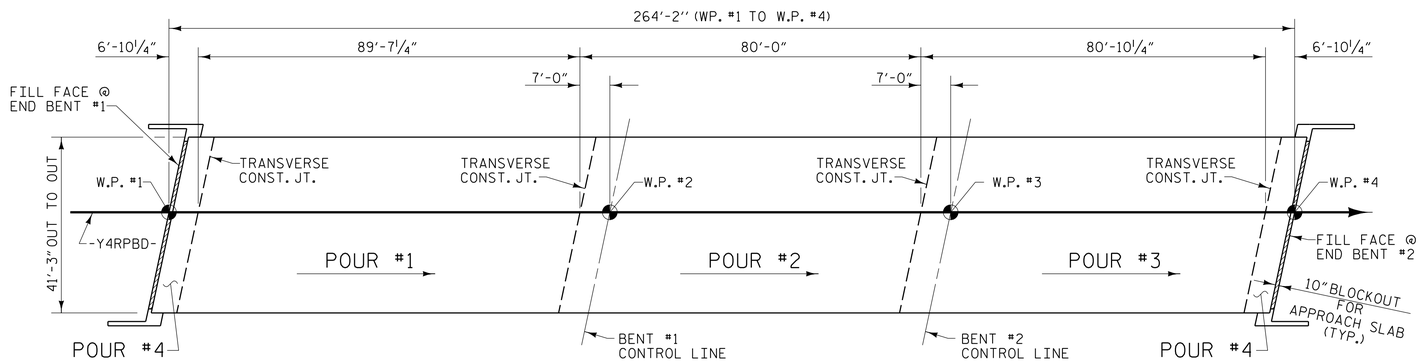

POURING SEQUENCE AND LAYOUT FOR COMPUTING AREA OF REINFORCED CONCRETE DECK SLAB

(SQ. FT. = 10,897)

NOTE: THE UPPER PORTION OF THE WINGS SHALL BE POURED WITH THE SUPERSTRUCTURE.

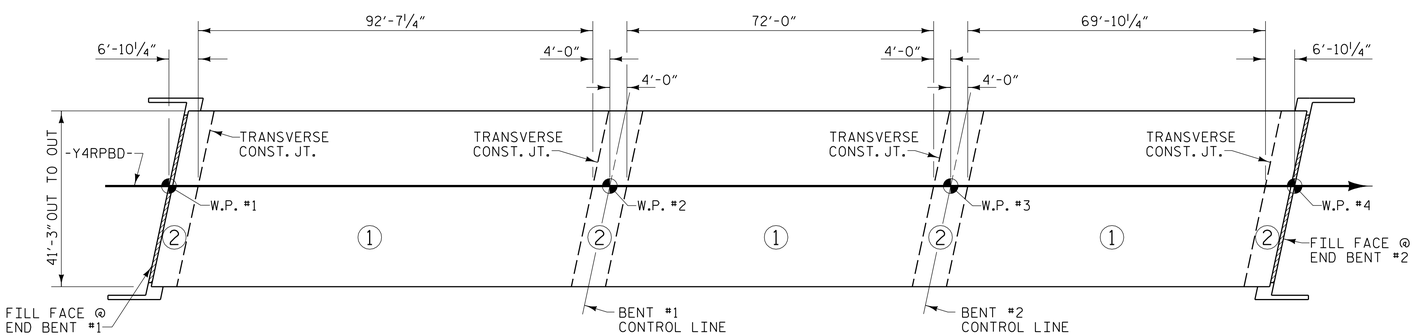

OPTIONAL POURING SEQUENCE

POUR ② SHALL NOT BE STARTED UNTIL BOTH ADJACENT ① POURS REACH A MINIMUM OF 3000 PSI.

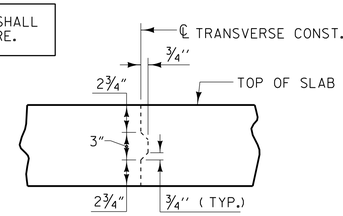

TRANSVERSE CONSTRUCTION JOINT DETAIL

NOTE: REINFORCING STEEL IN SLAB NOT SHOWN. LONGITUDINAL REINFORCING STEEL SHALL BE CONTINUOUS THRU JOINT

PROJECT NO. U-2579B

FORSYTH COUNTY

STATION: 26+60.00 -Y4RPBD-

STATE OF NORTH CAROLINA
DEPARTMENT OF TRANSPORTATION
RALEIGH

SUPERSTRUCTURE

BILL OF MATERIAL

NORTH CAROLINA PROFESSIONAL SEAL 034352 ENGINEER TIMOTHY R. PETERSON 5/27/2014

DocuSigned by: Timothy R. Peterson
6DC417164 7CD4DF...

DWG. NO. RPBD-23

REVISIONS							
NO.	BY:	DATE:	NO.	BY:	DATE:		
1			3				
2			4				

SHEET NO. S-420

TOTAL SHEETS 707

STR #11

DRAWN BY :	W. B. ALLEN	DATE :	4/13
CHECKED BY :	T. R. PETERSON	DATE :	6/13
DESIGN ENGINEER OF RECORD:	T. R. PETERSON	DATE :	5/27/14

5/27/2014 1:25:55 AM R:\Structures\U-2579B Ramp BD\U-2579B_RPBD_SD_BM_01.dgn