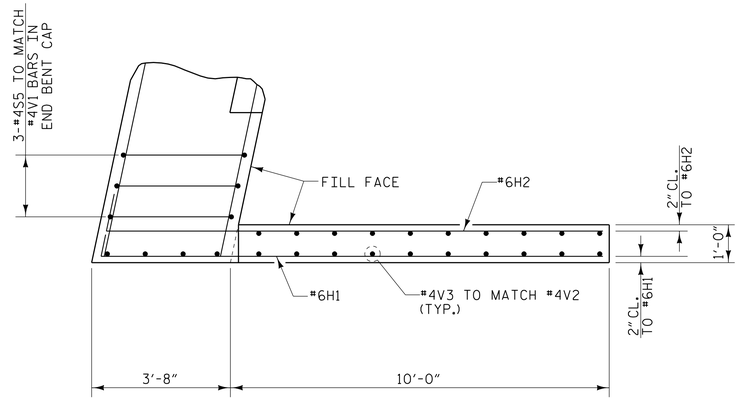

PLAN OF LEFT WING

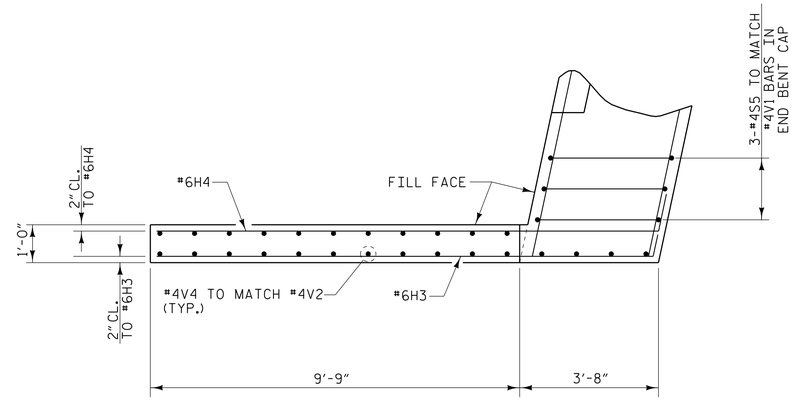

PLAN OF RIGHT WING

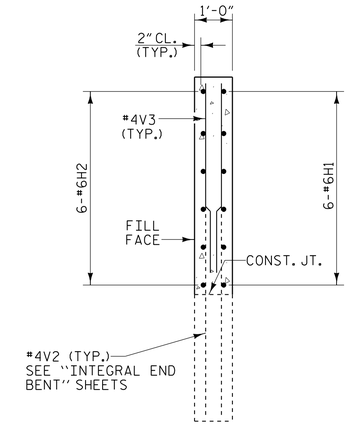

SECTION A-A

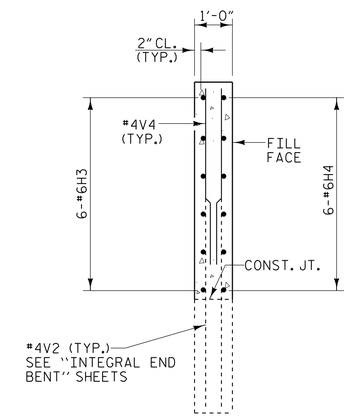

SECTION B-B

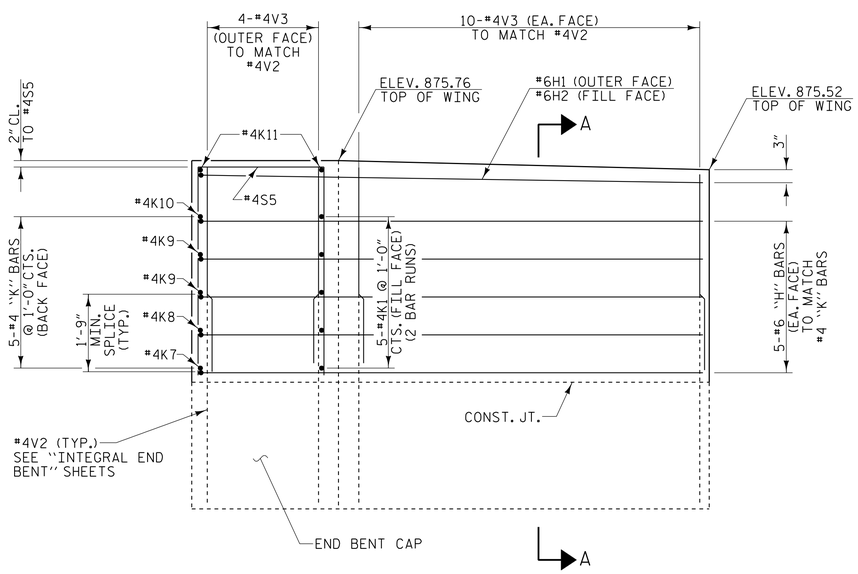

ELEVATION OF LEFT WING

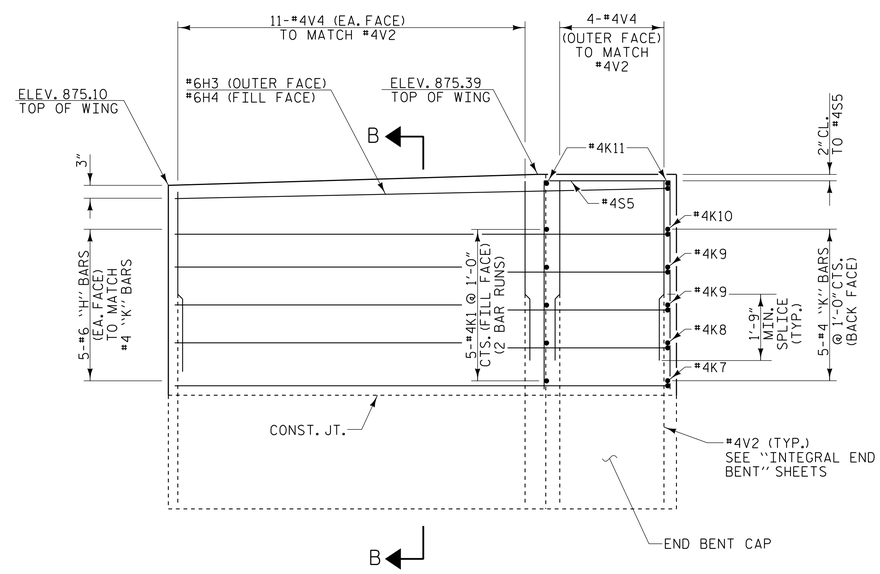

ELEVATION OF RIGHT WING

END BENT #1

PROJECT NO. U-2579B

FORSYTH COUNTY

STATION: 26+60.00 -Y4RPBD-

SHEET 4 OF 5

STATE OF NORTH CAROLINA
DEPARTMENT OF TRANSPORTATION
RALEIGH

PLAN OF SPANS WING DETAILS

(END BENT #1)

PLANS PREPARED BY:

MULKEY ENGINEERS & CONSULTANTS
PO BOX 33127
RALEIGH, N.C. 27636
(919) 851-1912
(919) 851-1918 (FAX)
WWW.MULKEYINC.COM
NC LICENSE NO. C-1021

NORTH CAROLINA PROFESSIONAL SEAL 034352 ENGINEER TERRY R. PETERSON
5/27/2014
DocuSigned by: Terry R. Peterson
6DC417164 7CD40F...

DWG. NO. RPBD-11

REVISIONS							SHEET NO.
NO.	BY:	DATE:	NO.	BY:	DATE:		S-408
1			3				TOTAL SHEETS
2			4				707

STR #11

DRAWN BY :	W. B. ALLEN	DATE :	5/13
CHECKED BY :	T. R. PETERSON	DATE :	6/13
DESIGN ENGINEER OF RECORD:	T. R. PETERSON	DATE :	5/27/14

5/27/2014 11:22:48 AM R:\Structures\U-2579B_Ramp BD\U-2579B_RPBD_S0_S4_01.dgn