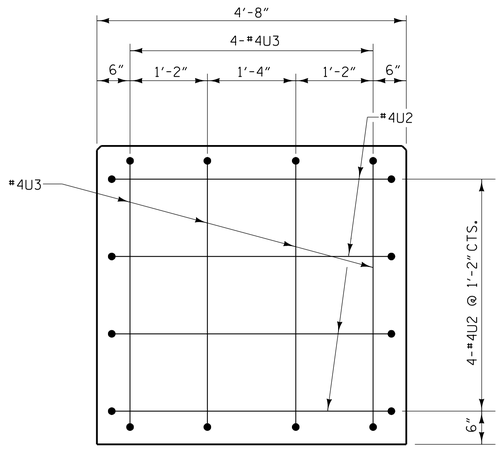

CAP END VIEW

(TYP. EACH END)

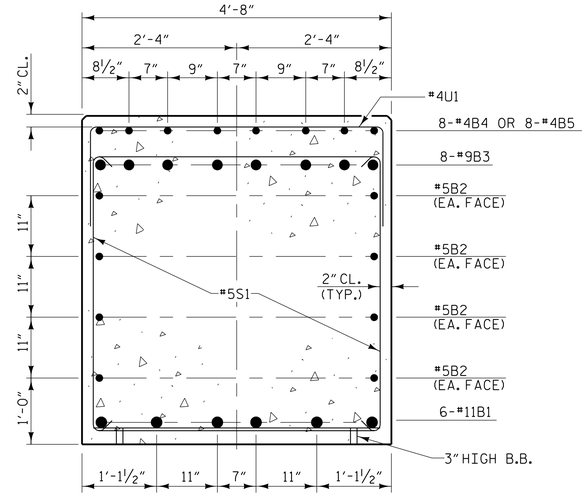

SECTION A-A

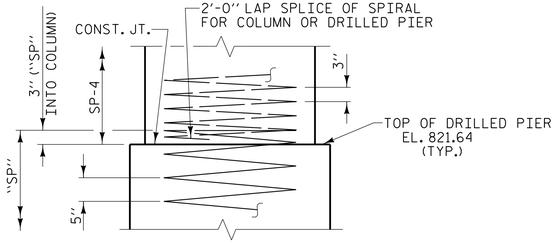

CONSTRUCTION JOINT DETAIL

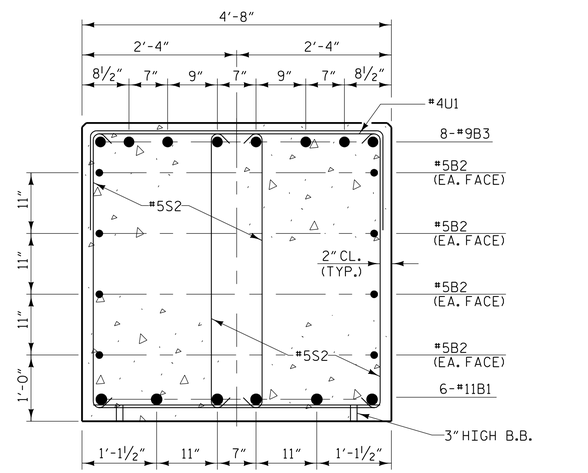

SECTION B-B

BAR TYPES

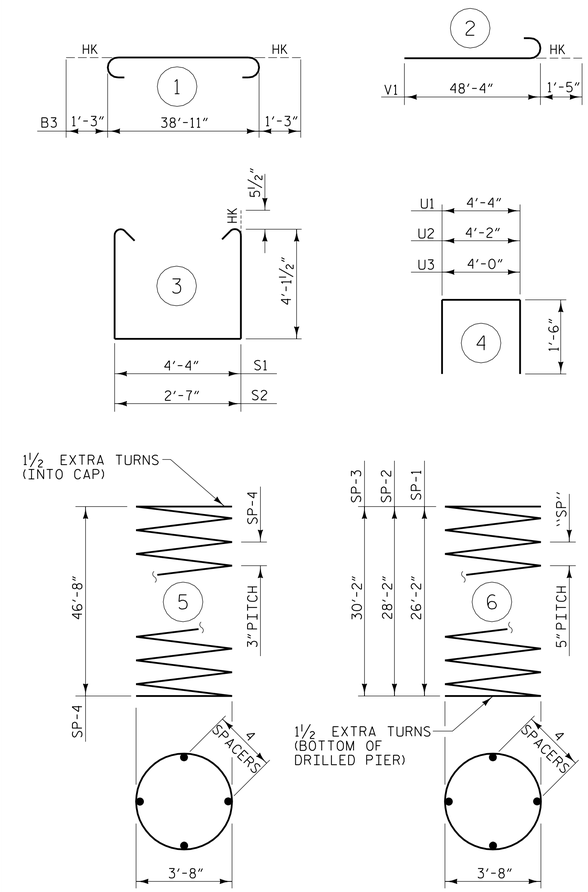

ALL BAR DIMENSIONS ARE OUT TO OUT

✱✱✱ THE SP-4 SPIRAL REINFORCING STEEL SHALL BE W20 OR D-20 COLD DRAWN WIRE OR #4 PLAIN OR DEFORMED BAR.

✱✱ THE SP-1, SP-2 AND SP-3 SPIRAL REINFORCING STEEL SHALL BE W31 OR D-31 COLD DRAWN WIRE OR #5 PLAIN OR DEFORMED BAR.

▲ NO SEPARATE PAYMENT WILL BE MADE FOR CSL TUBES. CSL TUBES WILL BE INCLUDED IN THE UNIT BID PRICE FOR DRILLED PIERS.

BILL OF MATERIAL

BENT #1

BAR	NO.	SIZE	TYPE	LENGTH	WEIGHT
B1	6	#11	STR	38'-11"	1241
B2	8	#5	STR	39'-1"	326
B3	8	#9	1	41'-5"	1127
B4	8	#4	STR	21'-6"	115
B5	8	#4	STR	8'-6"	45
M1	20	#11	STR	37'-0"	3932
M2	20	#11	STR	39'-0"	4144
M3	20	#11	STR	41'-0"	4357
S1	32	#5	3	13'-6"	451
S2	24	#5	3	11'-9"	294
U1	48	#4	4	7'-4"	235
U2	8	#4	4	7'-2"	38
U3	8	#4	4	7'-0"	37
V1	60	#10	2	49'-9"	12844
TOTAL REINFORCING STEEL					29186 lbs.
SPIRAL COLUMN REINFORCING STEEL (SP)					
SP-1	1	✱✱	6	738'-8"	770
SP-2	1	✱✱	6	795'-6"	830
SP-3	1	✱✱	6	840'-11"	877
SP-4	3	✱✱✱	5	2152'-11"	4314
TOTAL SPIRAL COLUMN REINFORCING STEEL					6791 lbs.

CLASS "A" CONCRETE - CU. YARDS

POUR 2 - COLUMNS	64.8 CU. YDS.
POUR 3 - CAP	32.6 CU. YDS.
TOTAL CLASS "A" CONCRETE	97.4 CU. YDS.

4'-6" Ø DRILLED PIERS

DRILLED PIER CONCRETE POUR 1 (DRILLED PIERS)	50.7 CU. YDS.
4'-6" Ø DRILLED PIERS IN SOIL:	49.0 LIN. FT.
4'-6" Ø DRILLED PIERS NOT IN SOIL:	37.0 LIN. FT.
4'-6" Ø PERMANENT STEEL CASING	31.9 LIN. FT.
▲ CSL TUBES	362.0 LIN. FT.

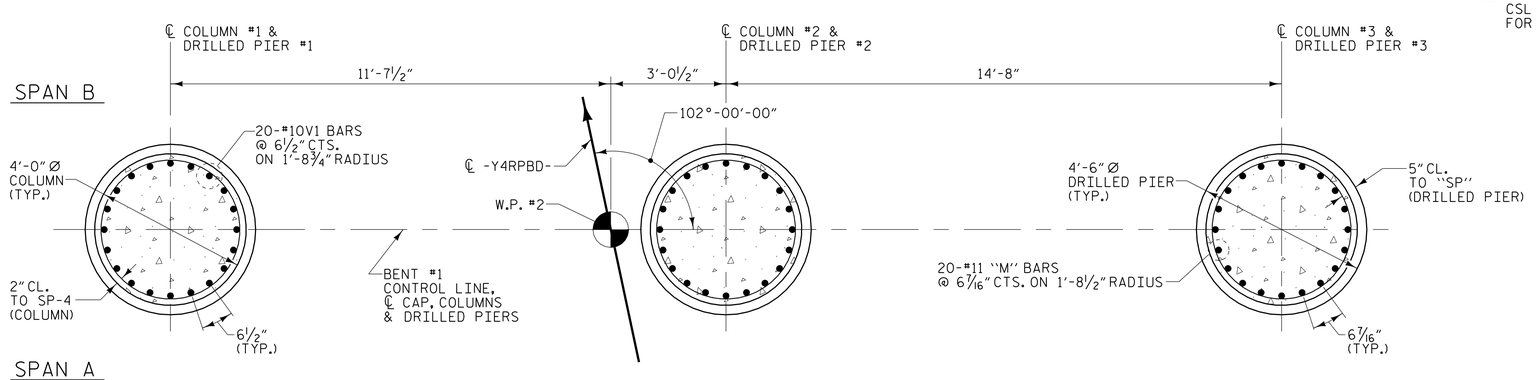

PLAN OF COLUMNS AND DRILLED PIERS

(DIMENSIONS AND REINFORCING STEEL ARE TYPICAL FOR EACH COLUMN AND DRILLED PIER)

PROJECT NO. U-2579B
FORSYTH COUNTY
STATION: 26+60.00 -Y4RPBD-

SHEET 2 OF 2

STATE OF NORTH CAROLINA
DEPARTMENT OF TRANSPORTATION
RALEIGH

SUBSTRUCTURE
BENT #1

PLANS PREPARED BY:
MULKEY ENGINEERS & CONSULTANTS
PO BOX 33127
RALEIGH, N.C. 27636
(919) 851-1912
(919) 851-1918 (FAX)
WWW.MULKEYINC.COM
NC LICENSE NO. C-1021

NORTH CAROLINA PROFESSIONAL SEAL 034352 ENGINEER TERRE R. PETERSON
5/27/2014
DocuSigned by: Terre R. Peterson
EDC417164CD4DF...

DWG. NO. RPBD-28

REVISIONS							SHEET NO.
NO.	BY:	DATE:	NO.	BY:	DATE:		S-425
1			3				TOTAL SHEETS
2			4				707

STR #11

DRAWN BY : W. B. ALLEN DATE : 2/14
CHECKED BY : T. R. PETERSON DATE : 2/14
DESIGN ENGINEER OF RECORD: T. R. PETERSON DATE : 5/27/14

5/27/2014 12:28:59 AM R:\Structures\U-2579B Romp BD\U-2579B_RPBD_S0_B1_02.dgn