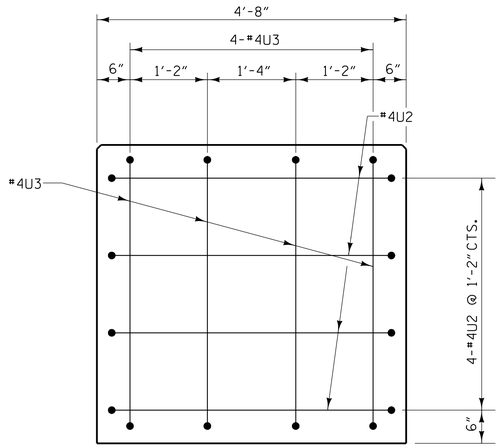

CAP END VIEW

(TYP. EACH END)

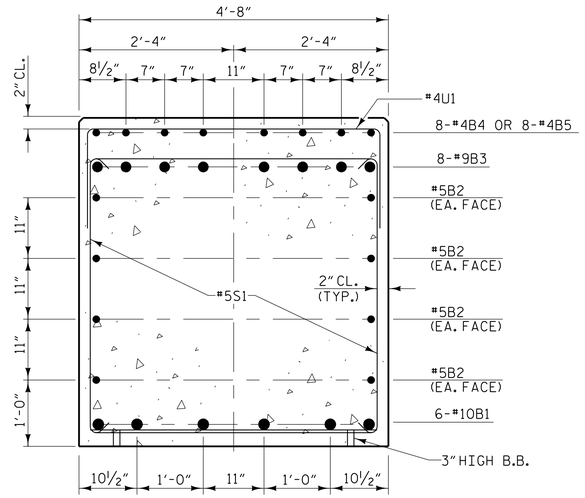

SECTION A-A

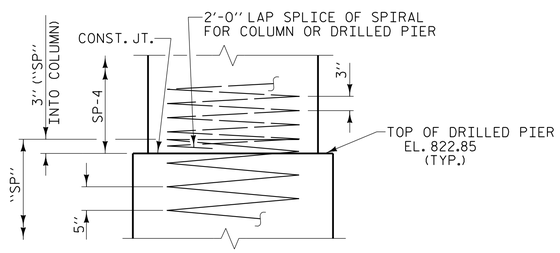

CONSTRUCTION JOINT DETAIL

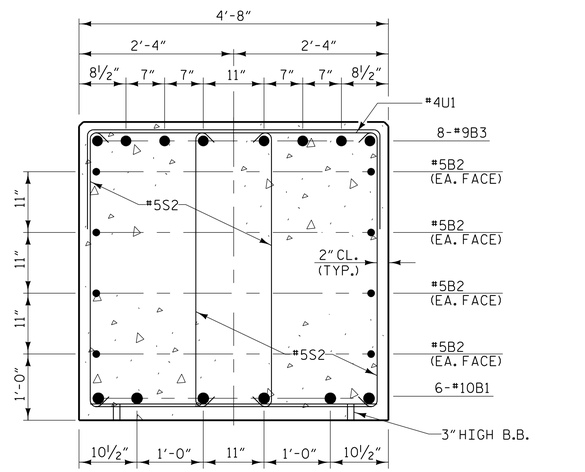

SECTION B-B

BAR TYPES

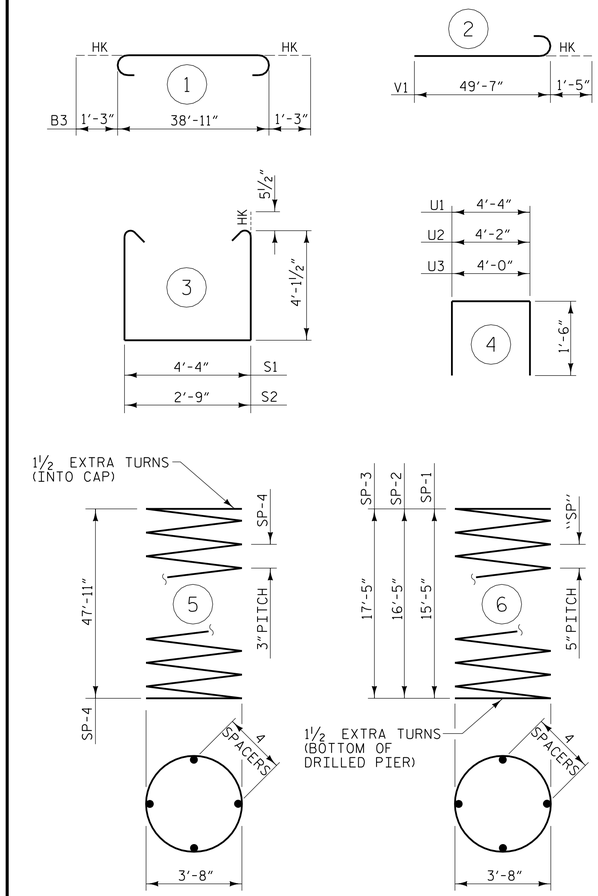

ALL BAR DIMENSIONS ARE OUT TO OUT

BILL OF MATERIAL

BENT #2

BAR	NO.	SIZE	TYPE	LENGTH	WEIGHT
B1	6	#10	STR	38'-11"	1005
B2	8	#5	STR	39'-1"	326
B3	8	#9	1	41'-5"	1127
B4	8	#4	STR	21'-6"	115
B5	8	#4	STR	8'-6"	45
M1	16	#11	STR	26'-3"	2231
M2	16	#11	STR	27'-3"	2316
M3	16	#11	STR	28'-3"	2401
S1	32	#5	3	13'-6"	451
S2	24	#5	3	11'-11"	298
U1	48	#4	4	7'-4"	235
U2	8	#4	4	7'-2"	38
U3	8	#4	4	7'-0"	37
V1	48	#10	2	51'-0"	10534

TOTAL REINFORCING STEEL 21159 lbs.

SPIRAL COLUMN REINFORCING STEEL (SP)

SP-1	1	✱✱	6	443'-2"	462
SP-2	1	✱✱	6	465'-11"	486
SP-3	1	✱✱	6	500'-0"	522
SP-4	3	✱✱✱	5	2209'-11"	4429

TOTAL SPIRAL COLUMN REINFORCING STEEL 5899 lbs.

CLASS "A" CONCRETE - CU. YARDS

POUR 2 - COLUMNS 66.6 CU. YDS.
POUR 3 - CAP 32.6 CU. YDS.

TOTAL CLASS "A" CONCRETE 99.2 CU. YDS.

4'-6" Ø DRILLED PIERS

DRILLED PIER CONCRETE
POUR 1 (DRILLED PIERS) 29.9 CU. YDS.

4'-6" Ø DRILLED PIERS IN SOIL: 22.8 LIN. FT.

4'-6" Ø DRILLED PIERS NOT IN SOIL: 28.0 LIN. FT.

4'-6" Ø PERMANENT STEEL CASING 19.1 LIN. FT.

▲ CSL TUBES 221.0 LIN. FT.

✱✱✱ THE SP-4 SPIRAL REINFORCING STEEL SHALL BE W20 OR D-20 COLD DRAWN WIRE OR #4 PLAIN OR DEFORMED BAR.

✱✱ THE SP-1, SP-2 AND SP-3 SPIRAL REINFORCING STEEL SHALL BE W31 OR D-31 COLD DRAWN WIRE OR #5 PLAIN OR DEFORMED BAR.

▲ NO SEPARATE PAYMENT WILL BE MADE FOR CSL TUBES. CSL TUBES WILL BE INCLUDED IN THE UNIT BID PRICE FOR DRILLED PIERS.

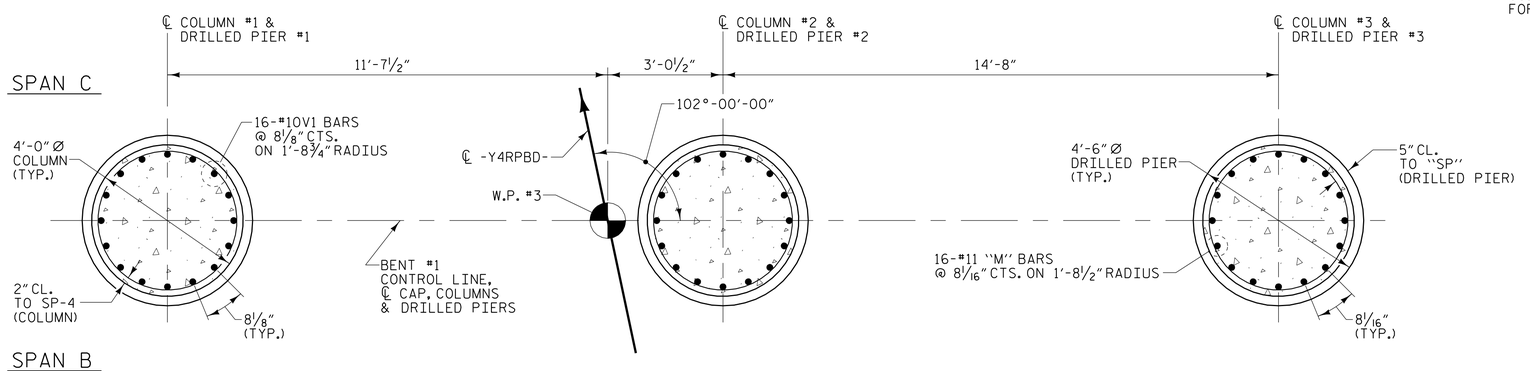

PLAN OF COLUMNS AND DRILLED PIERS

(DIMENSIONS AND REINFORCING STEEL ARE TYPICAL FOR EACH COLUMN AND DRILLED PIER)

PROJECT NO. U-2579B
FORSYTH COUNTY
STATION: 26+60.00 -Y4RPBD-

SHEET 2 OF 2

STATE OF NORTH CAROLINA
DEPARTMENT OF TRANSPORTATION
RALEIGH

SUBSTRUCTURE
BENT #2

PLANS PREPARED BY:
MULKEY ENGINEERS & CONSULTANTS
PO Box 33127
Raleigh, N.C. 27636
(919) 851-1912
(919) 851-1918 (FAX)
WWW.MULKEYINC.COM
NC LICENSE NO. C-1021

NORTH CAROLINA PROFESSIONAL SEAL 034352 ENGINEER THERON R. PETERSON
5/27/2014
DocuSigned by: Theron R Peterson
6DC4171647CD40F...

DWG. NO. RPBD-30

REVISIONS						SHEET NO.
NO.	BY:	DATE:	NO.	BY:	DATE:	S-427
1			3			TOTAL SHEETS
2			4			707

STR #11

DRAWN BY : W. B. ALLEN DATE : 2/14
CHECKED BY : T. R. PETERSON DATE : 2/14
DESIGN ENGINEER OF RECORD: T. R. PETERSON DATE : 5/27/14

5/27/2014 11:30:13 AM R:\Structures\U-2579B Ramp BD\U-2579B_RPBD_S0_B2_02.dgn