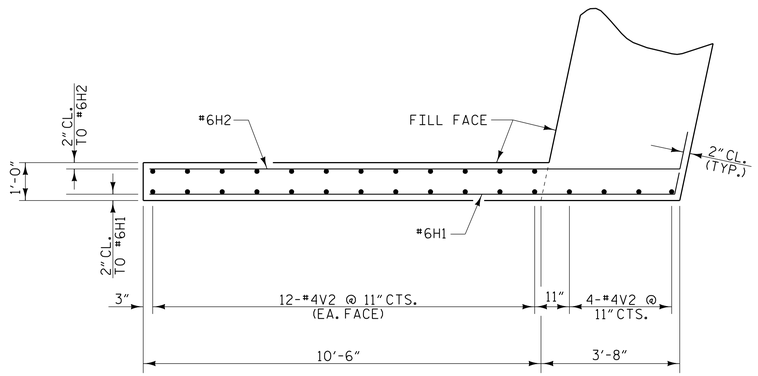

PLAN OF LEFT WING - W1

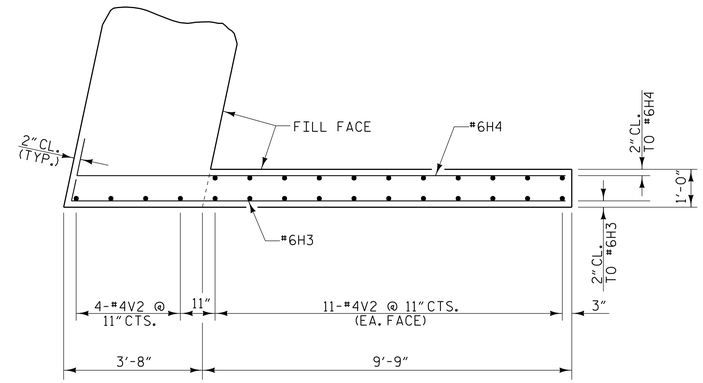

PLAN OF RIGHT WING - W2

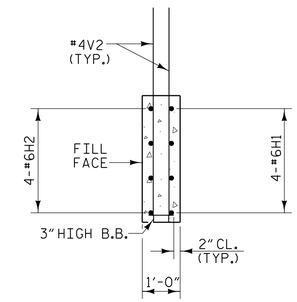

SECTION X-X

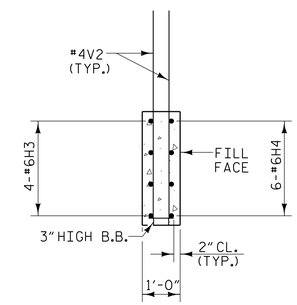

SECTION Y-Y

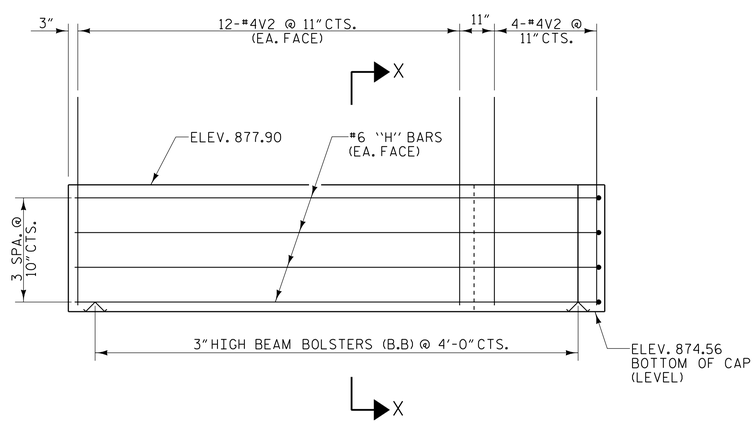

ELEVATION OF LEFT WING - W1

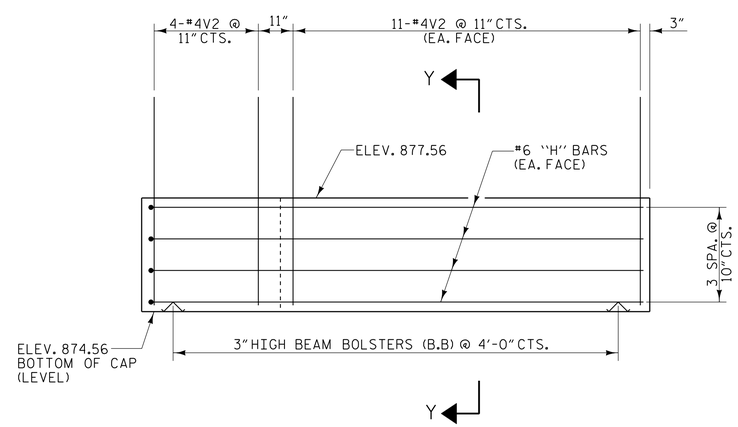

ELEVATION OF RIGHT WING - W2

NOTE:

THE UPPER PORTION OF THE WINGS SHALL BE POURED WITH THE SUPERSTRUCTURE. FOR DETAILS AND REINFORCING STEEL, SEE SUPERSTRUCTURE DETAILS.

PROJECT NO. U-2579B
FORSYTH COUNTY
STATION: 26+60.00 -Y4RPBD-

SHEET 2 OF 3

STATE OF NORTH CAROLINA
DEPARTMENT OF TRANSPORTATION
RALEIGH

SUBSTRUCTURE

INTEGRAL
END BENT #2

PLANS PREPARED BY:
MULKEY ENGINEERS & CONSULTANTS
PO Box 33127
Raleigh, N.C. 27636
(919) 851-1912
(919) 851-1918 (FAX)
WWW.MULKEYINC.COM
NC LICENSE NO. C-1021

NORTH CAROLINA PROFESSIONAL SEAL 034352 ENGINEER TARRE R. PETERSON
5/27/2014
DocuSigned by: Tarre R. Peterson
6DC417164 7CD40F...

REVISIONS							SHEET NO.
NO.	BY:	DATE:	NO.	BY:	DATE:		S-429
1			3				TOTAL SHEETS
2			4				707

DWG. NO. RPBD-32

STR #11

DRAWN BY : W. B. ALLEN DATE : 11/13
CHECKED BY : T. R. PETERSON DATE : 11/13
DESIGN ENGINEER OF RECORD: T. R. PETERSON DATE : 5/27/14

5/27/2014 11:36:21 AM R:\Structures\U-2579B Ramp BD\U-2579B_RPBD_SD_E2_02.dgn