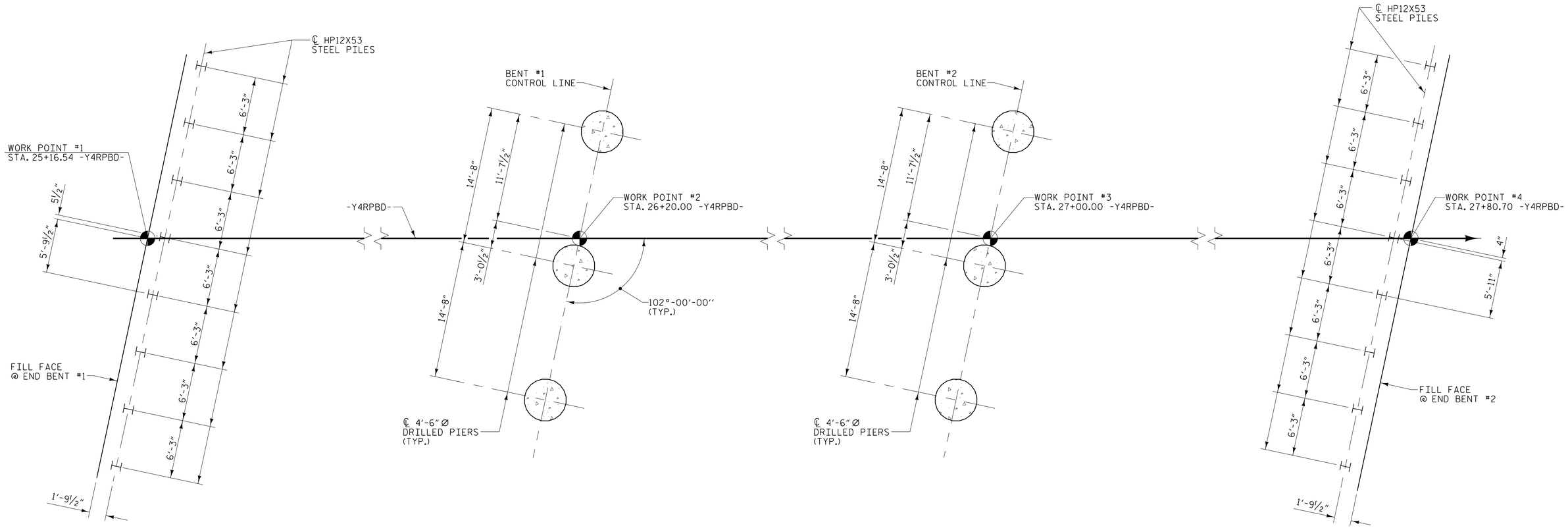

FOUNDATION LAYOUT

ALL PILES AT END BENT #1 AND END BENT #2 ARE HP12X53.

DIMENSIONS LOCATING PILES ARE SHOWN TO THE PILE CENTERLINE.

DIMENSIONS LOCATING DRILLED PIERS ARE SHOWN TO THE DRILLED PIER CENTERLINE.

NOTES

FOR PILES, SEE SECTION 450 OF THE STANDARD SPECIFICATIONS.

OBSERVE A 3 MONTH WAITING PERIOD AFTER CONSTRUCTING THE EMBANKMENT TO WITHIN 2 FT. OF FINISHED GRADE BEFORE BEGINNING END BENT CONSTRUCTION AT END BENT #1.

PILES AT END BENT #1 ARE DESIGNED FOR A FACTORED RESISTANCE OF 120 TONS PER PILE.

DRIVE PILES AT END BENT #1 TO A REQUIRED DRIVING RESISTANCE OF 200 TONS PER PILE.

FOR DRILLED PIERS, SEE SECTION 411 OF THE STANDARD SPECIFICATIONS.

DRILLED PIERS AT BENT #1 ARE DESIGNED FOR A FACTORED RESISTANCE OF 520 TONS PER PIER. CHECK FIELD CONDITIONS FOR REQUIRED TIP RESISTANCE OF 30 TSF.

INSTALL DRILLED PIERS AT BENT #1 TO A TIP ELEVATION NO HIGHER THAN 795 FT. (LT), 793 FT. (CT) AND 791 FT. (RT), SATISFY THE REQUIRED TIP RESISTANCE AND HAVE A PENETRATION OF AT LEAST 10 FT. INTO ROCK AS DEFINED BY ARTICLE 411-1 OF THE STANDARD SPECIFICATIONS.

PERMANENT STEEL CASINGS MAY BE REQUIRED FOR DRILLED PIERS AT BENT #1. IF REQUIRED, DO NOT EXTEND PERMANENT CASINGS BELOW ELEVATION 811 FT. WITHOUT PRIOR APPROVAL FROM THE ENGINEER. THE ENGINEER WILL DETERMINE THE NEED FOR PERMANENT STEEL CASING.

THE SCOUR CRITICAL ELEVATION FOR BENT #1 IS ELEVATION 811.0 FT. THE SCOUR CRITICAL ELEVATIONS ARE USED TO MONITOR POSSIBLE SCOUR PROBLEMS DURING THE LIFE OF THE STRUCTURE.

DRILLED PIERS AT BENT #2 ARE DESIGNED FOR A FACTORED RESISTANCE OF 490 TONS PER PIER. CHECK FIELD CONDITIONS FOR REQUIRED TIP RESISTANCE OF 30 TSF.

INSTALL DRILLED PIERS AT BENT #2 TO A TIP ELEVATION NO HIGHER THAN 807 FT. (LT); 806 FT. (CT) AND 805 FT. (RT), SATISFY THE REQUIRED TIP RESISTANCE AND HAVE A PENETRATION OF AT LEAST 10 FT. INTO ROCK AS DEFINED BY ARTICLE 411-1 OF THE STANDARD SPECIFICATIONS.

PERMANENT STEEL CASINGS MAY BE REQUIRED FOR DRILLED PIERS AT BENT #2. IF REQUIRED, DO NOT EXTEND PERMANENT CASINGS BELOW ELEVATION 816.5 FT. WITHOUT PRIOR APPROVAL FROM THE ENGINEER. THE ENGINEER WILL DETERMINE THE NEED FOR PERMANENT STEEL CASING.

THE SCOUR CRITICAL ELEVATION FOR BENT #2 IS ELEVATION 816.5 FT. THE SCOUR CRITICAL ELEVATIONS ARE USED TO MONITOR POSSIBLE SCOUR PROBLEMS DURING THE LIFE OF THE STRUCTURE.

SID INSPECTIONS MAY BE REQUIRED FOR DRILLED PIERS AT BENTS #1 AND #2. THE ENGINEER WILL DETERMINE THE NEED FOR SID INSPECTIONS. FOR SID INSPECTIONS, SEE SECTION 411 OF THE STANDARD SPECIFICATIONS.

CSL TUBES ARE REQUIRED AND CSL TESTING MAY BE REQUIRED FOR DRILLED PIERS. THE ENGINEER WILL DETERMINE THE NEED FOR CSL TESTING. FOR CSL TESTING, SEE SECTION 411 OF THE STANDARD SPECIFICATIONS.

SPT MAY BE REQUIRED FOR DRILLED PIERS AT BENTS #1 AND #2. THE ENGINEER WILL DETERMINE THE NEED FOR SPT TESTING. FOR SPT TESTING, SEE SECTION 411 OF THE STANDARD SPECIFICATIONS.

OBSERVE A 3 MONTH WAITING PERIOD AFTER CONSTRUCTING THE EMBANKMENT TO WITHIN 2 FT. OF FINISHED GRADE BEFORE BEGINNING END BENT CONSTRUCTION AT END BENT #2.

PILES AT END BENT #2 ARE DESIGNED FOR A FACTORED RESISTANCE OF 110 TONS PER PILE.

DRIVE PILES AT END BENT #2 TO A REQUIRED DRIVING RESISTANCE OF 183 TONS PER PILE.

PROJECT NO. U-2579B

FORSYTH COUNTY

STATION: 26+60.00 -Y4RPBD-

SHEET 2 OF 4

STATE OF NORTH CAROLINA
DEPARTMENT OF TRANSPORTATION
RALEIGH

GENERAL DRAWING

FOR BRIDGE ON -Y4RPBD- OVER HARMON MILL (SMITH) CREEK BETWEEN US 158 AND US421/I-40 BUS.

PLANS PREPARED BY:

MULKEY ENGINEERS & CONSULTANTS
PO Box 33127
RALEIGH, N.C. 27636
(919) 851-1912
(919) 851-1918 (FAX)
WWW.MULKEYINC.COM
NO LICENSE NO. C-1051

NORTH CAROLINA PROFESSIONAL SEAL 034352 ENGINEER TERRENCE R. PETERSON

5/27/2014

DocuSigned by: Terrence R. Peterson
EDC417164 7CD40F...

DWG. NO. RPBD-2

REVISIONS						SHEET NO.
NO.	BY:	DATE:	NO.	BY:	DATE:	S-399
1			3			TOTAL SHEETS
2			4			707

STR #11

DRAWN BY :	W. B. ALLEN	DATE :	2/14
CHECKED BY :	T. R. PETERSON	DATE :	2/14
DESIGN ENGINEER OF RECORD:	T. R. PETERSON	DATE :	5/27/14

5/27/2004 11:17:57 AM R:\Structures\U-2579B_Ramp BD\U-2579B_RPBD_SD_FL_01.dgn