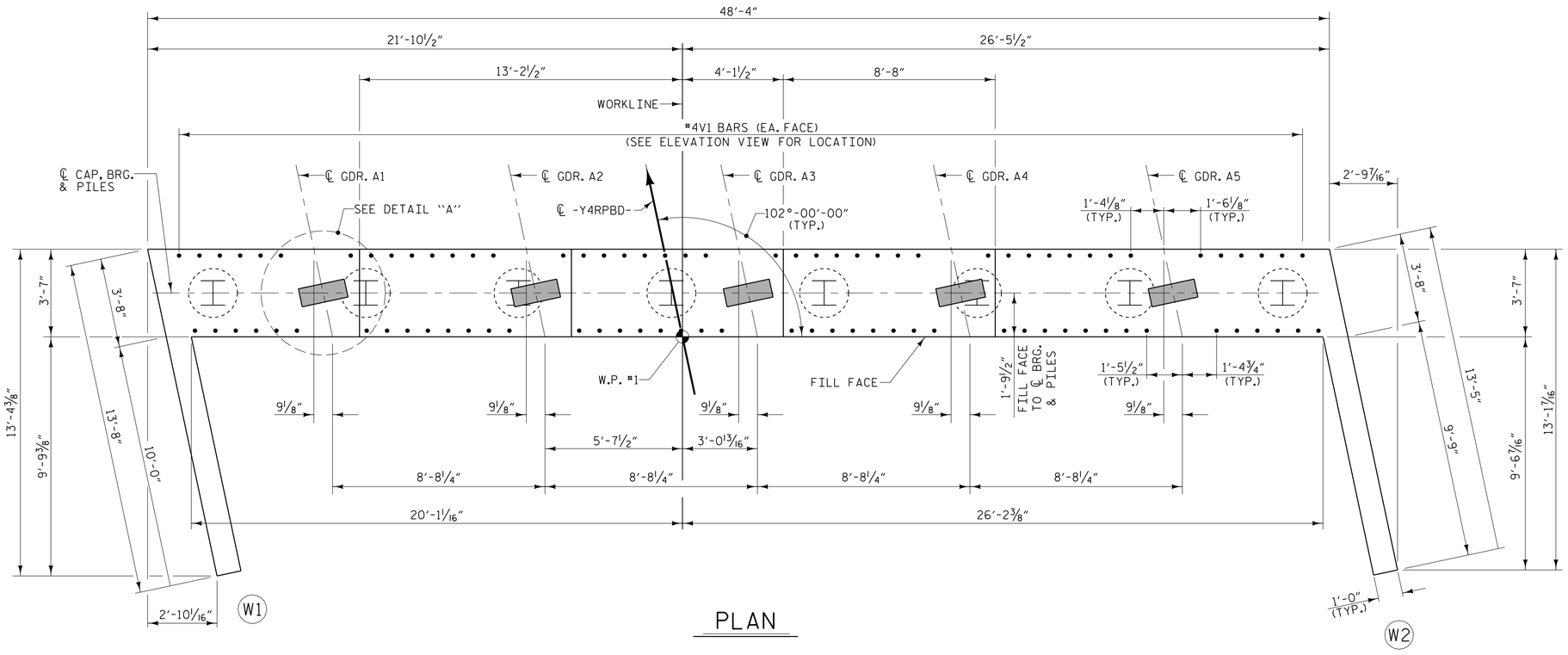

PLAN

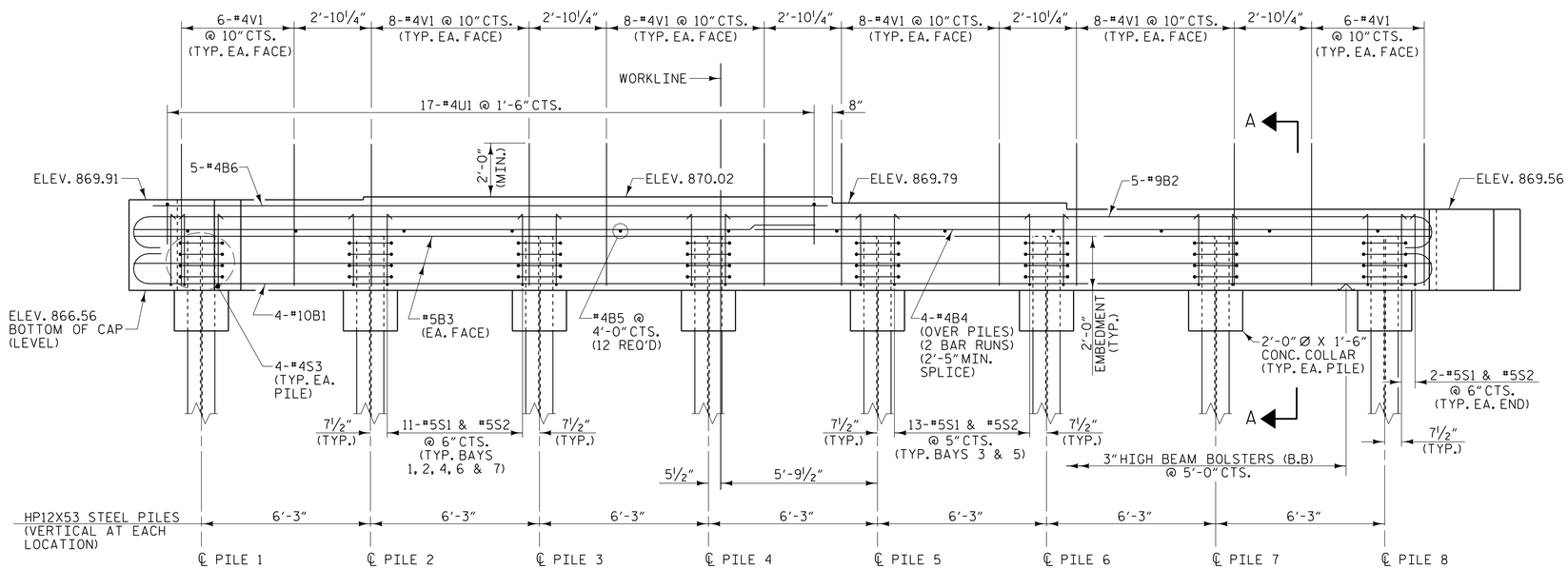

ELEVATION

NOTES

SEE SUPERSTRUCTURE SHEETS FOR UPPER PART OF INTEGRAL END BENT DETAILS.

THE CONTRACTOR SHALL PROVIDE FOR INSTALLATION OF THE 4" DIAMETER DRAIN PIPE THROUGH THE WING WALL AS REQUIRED FOR REINFORCED BRIDGE APPROACH FILLS. SEE ROADWAY PLANS. REINFORCING STEEL IN THE WING WALL MAY BE SHIFTED AS NECESSARY TO CLEAR THE DRAIN PIPE.

#4U1 BARS IN CAP MAY BE SHIFTED AS NECESSARY TO CLEAR #4V1 BARS.

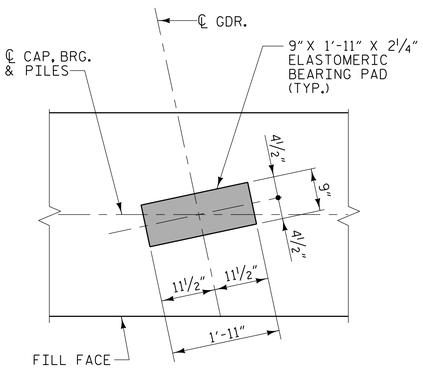

DETAIL "A"
(TYP. EACH GIRDER)

PROJECT NO. U-2579B
FORSYTH COUNTY
STATION: 26+60.00 -Y4RPBD-

SHEET 1 OF 3

STATE OF NORTH CAROLINA
DEPARTMENT OF TRANSPORTATION
RALEIGH

SUBSTRUCTURE

INTEGRAL END BENT #1

PLANS PREPARED BY:
MULKEY ENGINEERS & CONSULTANTS
PO Box 33127 Raleigh, N.C. 27636
(919) 851-1912
(919) 851-1918 (FAX)
WWW.MULKEYINC.COM
NO LICENSE NO. C-1051

NORTH CAROLINA PROFESSIONAL SEAL 034352 ENGINEER THERON R. PETERSON
5/27/2014
DocuSigned by: Theron R. Peterson
6DC417164 7CD40F...

DWG. NO. RPBD-24

REVISIONS						SHEET NO.
NO.	BY:	DATE:	NO.	BY:	DATE:	S-421
1			3			TOTAL SHEETS
2			4			707

STR #11

DRAWN BY :	W. B. ALLEN	DATE :	10/13
CHECKED BY :	T. R. PETERSON	DATE :	11/13
DESIGN ENGINEER OF RECORD:	T. R. PETERSON	DATE :	5/27/14

5/27/2014 11:26:32 AM R:\Structures\U-2579B_Ramp BD\U-2579B_RPBD_S0_EL01.dgn