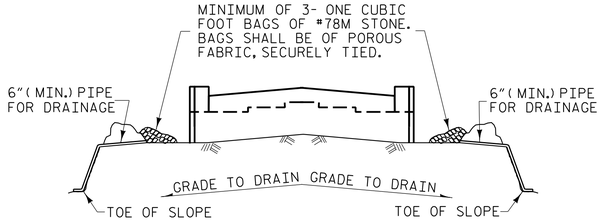

BAGGED STONE AND PIPE SHALL BE PLACED IMMEDIATELY AFTER COMPLETION OF END BENT EXCAVATION. PIPE MAY BE EITHER CONCRETE, CORRUGATED STEEL, CORRUGATED ALUMINUM ALLOY, OR CORRUGATED PLASTIC. PERFORATED PIPE WILL NOT BE ALLOWED.

BAGGED STONE SHALL REMAIN IN PLACE UNTIL THE ENGINEER DIRECTS THAT IT BE REMOVED. THE CONTRACTOR SHALL REMOVE AND DISPOSE OF SILT ACCUMULATIONS AT BAGGED STONE WHEN SO DIRECTED BY THE ENGINEER. BAGS SHALL BE REMOVED AND REPLACED WHENEVER THE ENGINEER DETERMINES THAT THEY HAVE DETERIORATED AND LOST THEIR EFFECTIVENESS.

NO SEPARATE PAYMENT WILL BE MADE FOR THIS WORK AND THE ENTIRE COST OF THIS WORK SHALL BE INCLUDED IN THE UNIT CONTRACT PRICE BID FOR THE SEVERAL PAY ITEMS.

TEMPORARY DRAINAGE AT END BENT

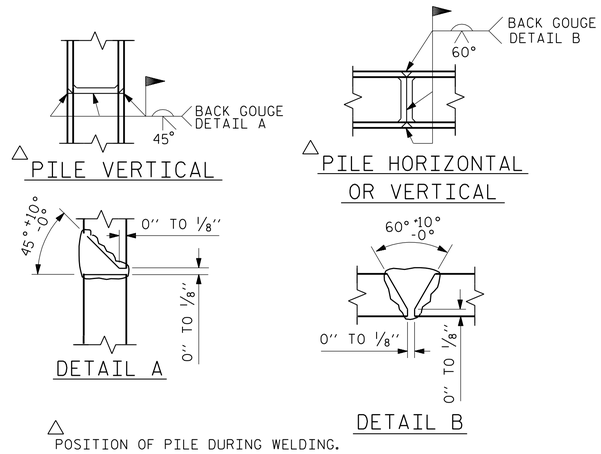

PILE SPLICE DETAILS

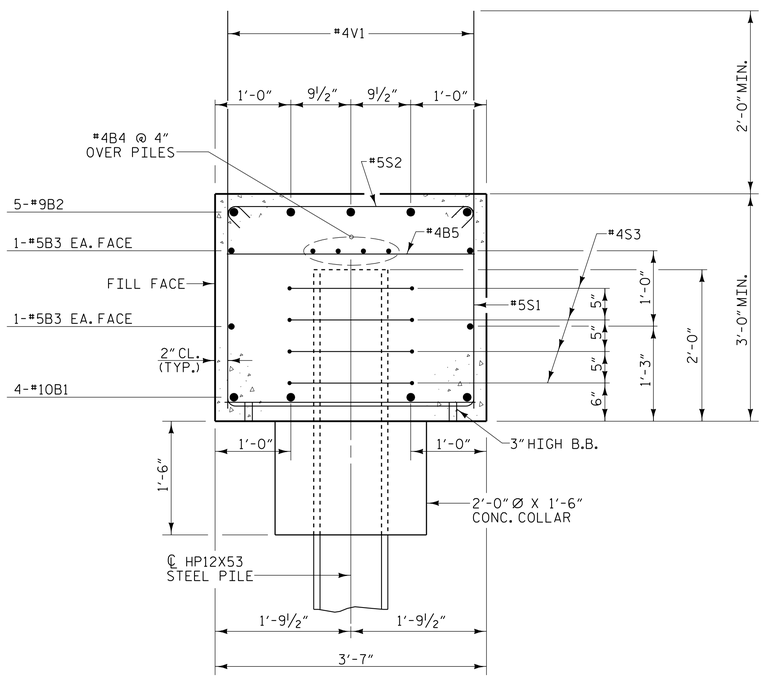

SECTION A-A

BAR TYPES

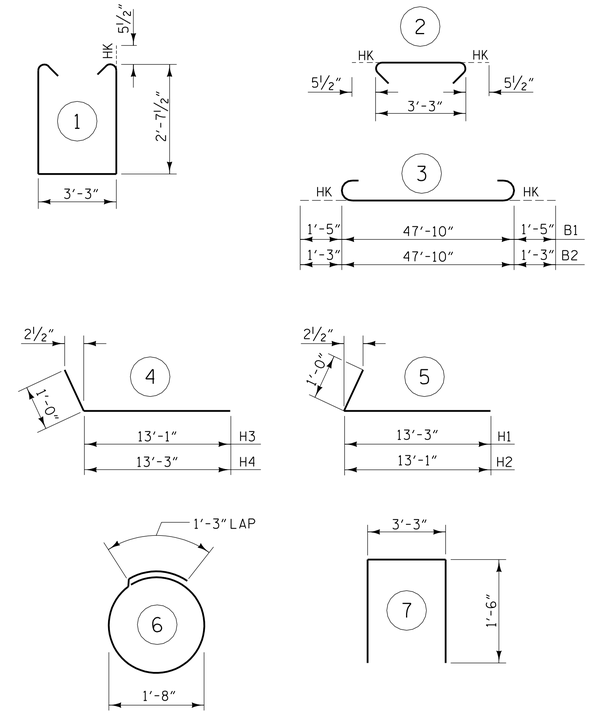

ALL BAR DIMENSIONS ARE OUT TO OUT

BILL OF MATERIAL

INTEGRAL END BENT #1

BAR	NO.	SIZE	TYPE	LENGTH	WEIGHT
B1	4	#10	3	50'-8"	872
B2	5	#9	3	50'-4"	856
B3	4	#5	STR	48'-0"	200
B4	8	#4	STR	25'-3"	135
B5	12	#4	STR	3'-3"	26
B6	5	#4	STR	24'-11"	83
H1	4	#6	5	14'-3"	86
H2	4	#6	5	14'-1"	85
H3	4	#6	4	14'-1"	85
H4	4	#6	4	14'-3"	86
S1	85	#5	1	9'-5"	835
S2	85	#5	2	4'-2"	369
S3	32	#4	6	6'-6"	139
V1	88	#4	STR	5'-4"	314
V2	50	#4	STR	5'-6"	184
U1	17	#4	7	6'-3"	71

TOTAL REINFORCING STEEL	4426 lbs.
CLASS "A" CONCRETE - CU. YARDS	24.7 cu. yds.
HP12X53 STEEL PILES 8 PILES REQUIRED - LIN. FEET	480

PROJECT NO. U-2579B

FORSYTH COUNTY

STATION: 26+60.00 -Y4RPBD-

SHEET 3 OF 3

STATE OF NORTH CAROLINA
DEPARTMENT OF TRANSPORTATION
RALEIGH

SUBSTRUCTURE

INTEGRAL END BENT #1

PLANS PREPARED BY:
MULKEY ENGINEERS & CONSULTANTS
PO Box 33127 RALEIGH, N.C. 27636 (919) 851-1912 (PHONE) (919) 851-1918 (FAX) WWW.MULKEYINC.COM
NC LICENSE NO. C-1021

NORTH CAROLINA PROFESSIONAL SEAL 034352 ENGINEER TERRY R. PETERSON 5/27/2014
DocuSigned by: Terry R. Peterson 6DC4171647CD40F...

DWG. NO. RPBD-26

REVISIONS							SHEET NO.
NO.	BY:	DATE:	NO.	BY:	DATE:		S-423
1			3				TOTAL SHEETS
2			4				707

STR #11

DRAWN BY :	W. B. ALLEN	DATE :	10/13
CHECKED BY :	T. R. PETERSON	DATE :	11/13
DESIGN ENGINEER OF RECORD:	T. R. PETERSON	DATE :	5/27/14

5/27/2004 11:21:42 AM R:\Structures\U-2579B_Ramp BD\U-2579B_RPBD_S0_E1_03.dgn