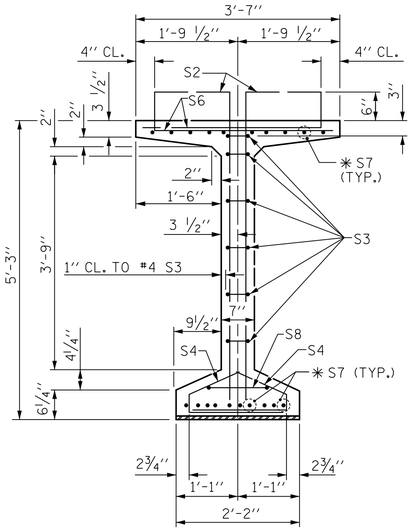

SECTION A-A

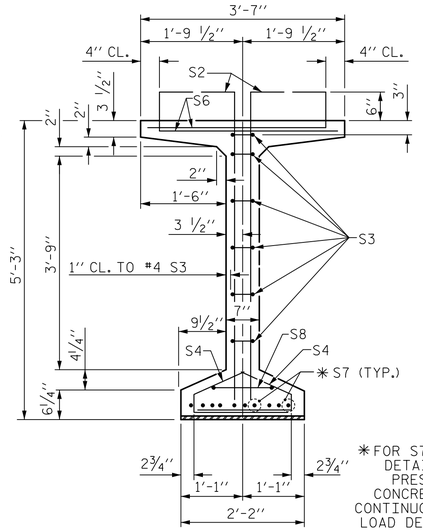

SECTION B-B

✱ FOR S7 BARS. SEE DETAIL "C" OF PRESTRESSED CONCRETE GIRDER CONTINUOUS FOR LIVE LOAD DETAILS SHEET

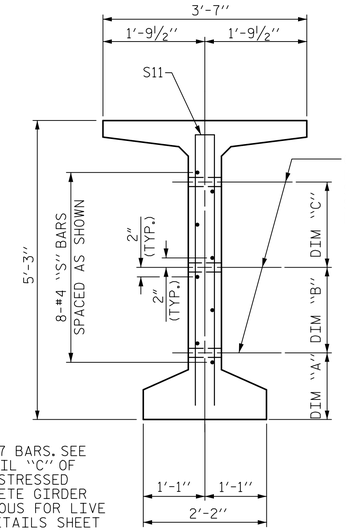

SECTION C-C

(S1, S6 AND S9 BARS NOT SHOWN)

DEBONDING LEGEND

- ● FULLY BONDED STRANDS
- ⊙ STRANDS DEBONDED FOR 2'-0" FROM END OF GIRDER
- ▣ STRANDS DEBONDED FOR 4'-0" FROM END OF GIRDER

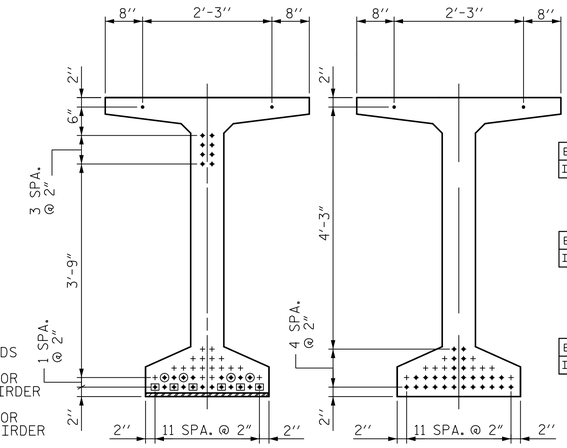

AT END OF GIRDER — AT ℄ OF GIRDER

0.6" Ø LOW RELAXATION STRAND LAYOUT

NOTE:
THE TRANSFER OF LOAD FROM THE ANCHORAGES TO THE GIRDER SHALL BE DONE WHEN CONCRETE HAS REACHED A COMPRESSIVE STRENGTH OF NOT LESS THAN 5600 PSI.

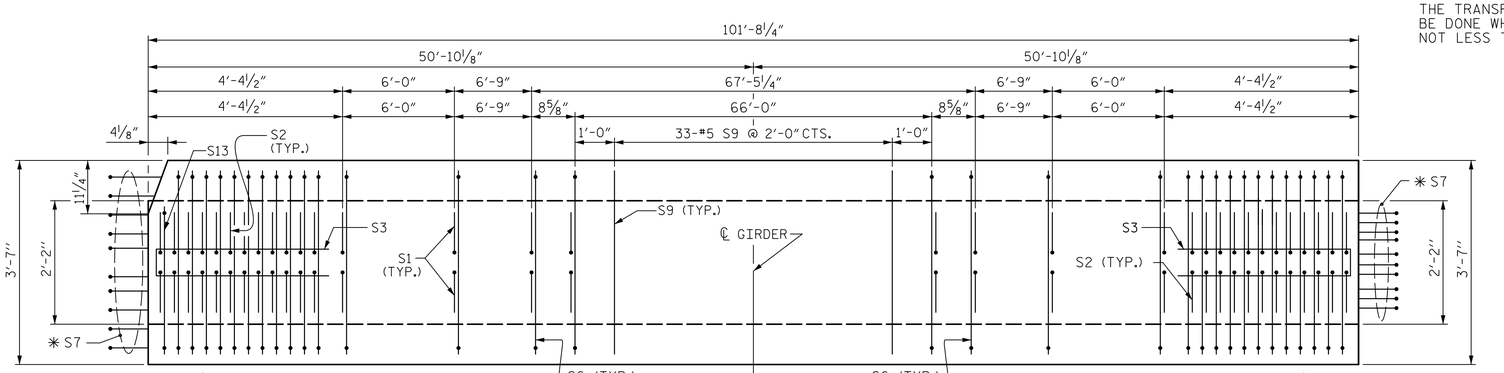

PLAN OF GIRDER

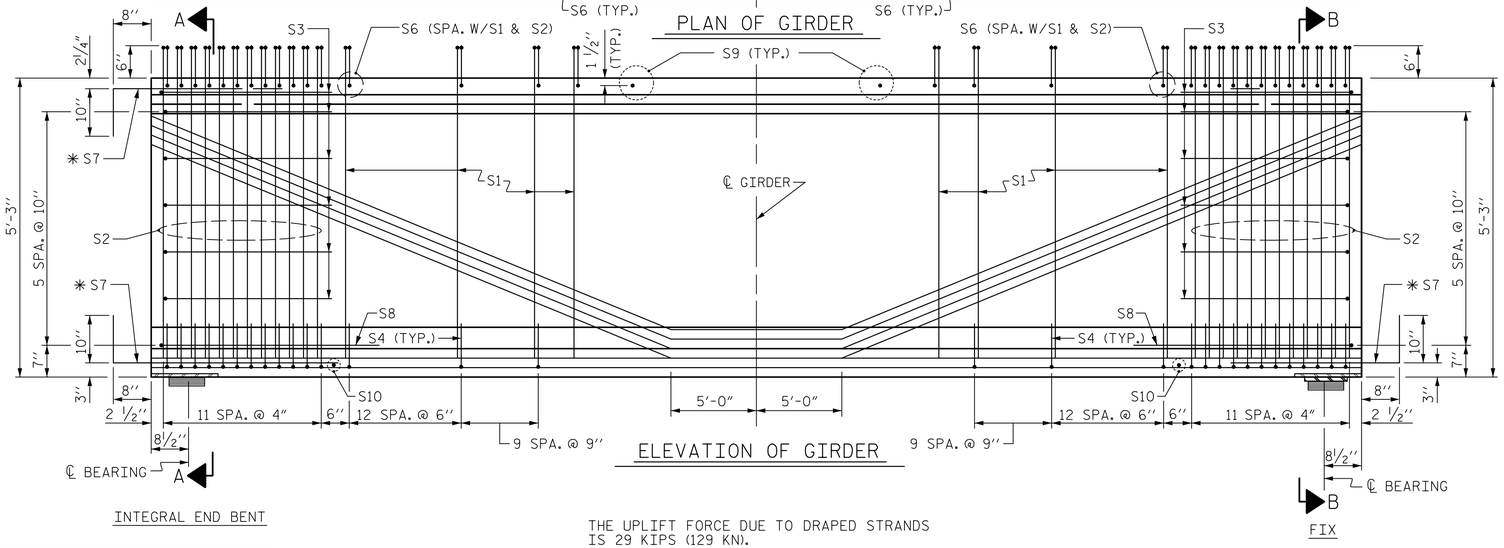

ELEVATION OF GIRDER

INTEGRAL END BENT

FIX

THE UPLIFT FORCE DUE TO DRAPED STRANDS IS 29 KIPS (129 KN).

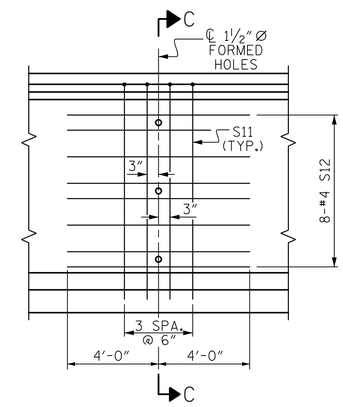

PARTIAL ELEVATION

SHOWING INTERMEDIATE STEEL DIAPHRAGM REINFORCING STEEL

0.6" Ø L. R. GRADE 270 STRANDS

AREA (SQUARE INCHES)	ULTIMATE STRENGTH (LBS. PER STRAND)	APPLIED PRESTRESS (LBS. PER STRAND)
0.217	58,600	43,950

REINFORCING STEEL FOR ONE GDR

	BAR	NUMBER	SIZE	TYPE	LENGTH	WEIGHT
EXTERIOR GDR.	S1	222	#4	1	6'-1"	903
INTERIOR GDR.	S1	222	#4	1	6'-1"	903
	S2	48	#5	1	6'-1"	305
	S3	12	#4	2	8'-5"	68
	S4	136	#4	3	3'-0"	273
EXTERIOR GDR.	S6	268	#5	4	4'-4"	1212
INTERIOR GDR.	S6	268	#5	4	4'-4"	1212
	✱ S7	30	#5	STR	3'-8"	115
	S8	2	#5	2	9'-0"	19
	S9	33	#5	STR	3'-3"	112
	S10	2	#3	STR	1'-10"	2
EXTERIOR GDR.	S11	8	#5	2	10'-0"	84
INTERIOR GDR.	S11	8	#5	2	10'-0"	84
	S12	16	#4	STR	8'-0"	86
	S13	2	#5	4	3'-8 5/16"	8

✱ NOTE: S7 BARS SHALL BE BENT BEFORE SHIPMENT. HEAT BENDING SHALL NOT BE ALLOWED.

BAR TYPES

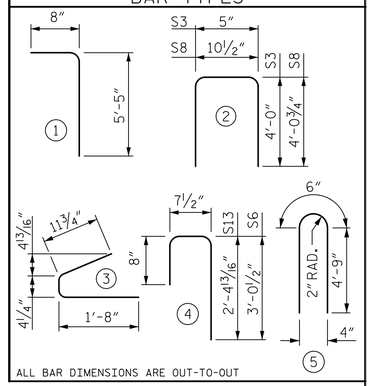

ALL BAR DIMENSIONS ARE OUT-TO-OUT

QUANTITIES FOR ONE GIRDER

	REINFORCING STEEL	7000 PSI CONCRETE	0.6" Ø L.R. STRANDS
	LB.	C.Y.	No.
EXTERIOR GIRDER	3187	20.14	30
INTERIOR GIRDER	3187	20.14	30

GIRDERS REQUIRED

NUMBER	LENGTH	TOTAL LENGTH
6	101'-8 1/4"	610'-1 1/2"

PROJECT NO. U-2579B

FORSYTH COUNTY

STATION: 628+65.50 -L-

SHEET 3 OF 3

DocuSigned by: Steven K Doerner
A22D3DBEFA1D43F...
8/7/2014

NORTH CAROLINA PROFESSIONAL SEAL 16572 ENGINEER STEVEN K. DOERNER

Prepared by:
JACOBS
JACOBS ENGINEERING GROUP
111 CORNING ROAD, SUITE 200
CARY, NORTH CAROLINA 27518
TEL: (919) 859-5000

DWG. NO. 18 OF 44

STATE OF NORTH CAROLINA
DEPARTMENT OF TRANSPORTATION
RALEIGH

STANDARD
63" PRESTRESSED CONCRETE
MODIFIED BULB TEE
CONTINUOUS FOR LIVE LOAD
SPAN C
RIGHT LANE

REVISIONS						SHEET NO.
NO.	BY:	DATE:	NO.	BY:	DATE:	S-371
1			3			TOTAL SHEETS
2			4			707

ASSEMBLED BY :	HLS	DATE :	6/2/14
CHECKED BY :	OKH	DATE :	8/1/14
DRAWN BY :	EEM 2/6/97	REV. 10/17/00	RWW/LES
CHECKED BY :	VAP 2/6/97	REV. 5/1/06R	TLA/GM
		REV. 10/1/11	MAA/GM

STD. NO. PCG7 (Sht. 2)