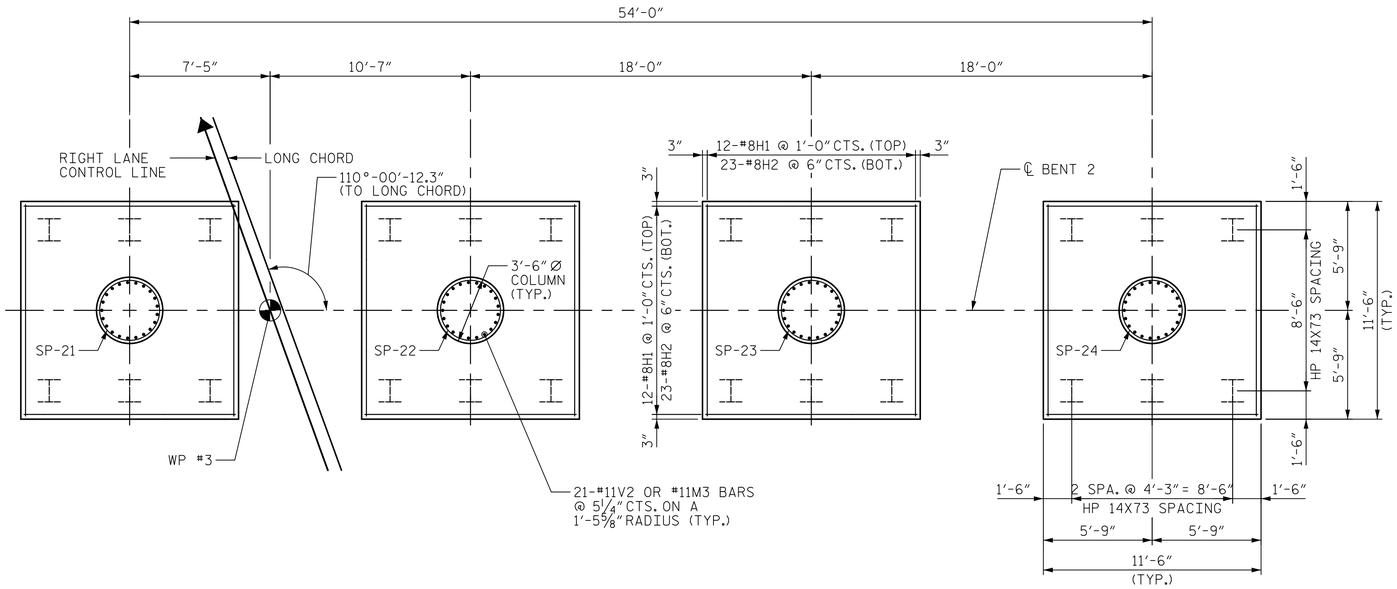

FOOTING PLAN

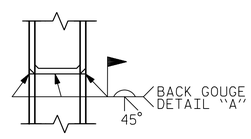

✱✱ PILE VERTICAL

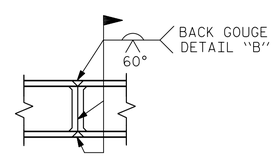

✱✱ PILE HORIZONTAL OR VERTICAL

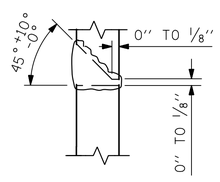

DETAIL "A"

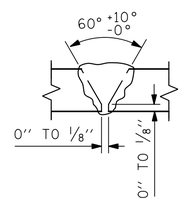

DETAIL "B"

PILE SPLICE DETAILS

✱✱ POSITION OF PILE DURING WELDING

BAR TYPES

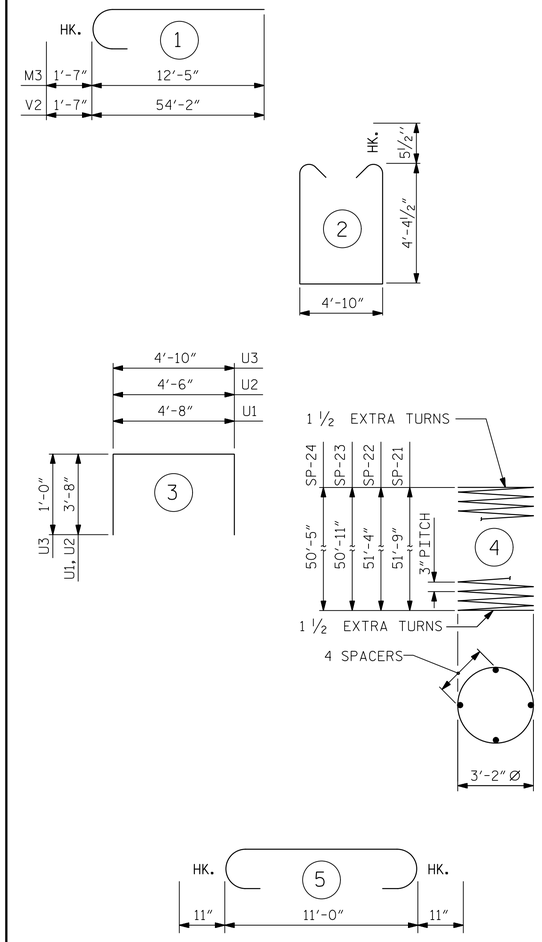

ALL BAR DIMENSIONS ARE OUT TO OUT.

BILL OF MATERIAL
BENT NO. 2

BAR	NO.	SIZE	TYPE	LENGTH	WEIGHT (LBS)
B1	8	#9	STR	50'-0"	1360
B2	8	#9	STR	23'-6"	639
B3	8	#10	STR	50'-0"	1721
B4	8	#10	STR	22'-9"	783
B5	20	#5	STR	33'-6"	699
B6	16	#4	STR	8'-2"	87
B7	32	#4	STR	11'-8"	249
H1	96	#8	STR	11'-0"	2820
H2	184	#8	5	12'-10"	6305
M3	84	#11	1	14'-0"	6248
S1	170	#5	2	14'-6"	2571
U1	8	#4	3	12'-0"	64
U2	8	#4	3	11'-10"	63
U3	66	#4	3	6'-10"	301
V2	84	#11	1	55'-9"	24881
REINFORCING STEEL				LBS.	48792
SP-21	1	✱	4	2063'-7"	1378
SP-22	1	✱	4	2045'-10"	1367
SP-23	1	✱	4	2028'-2"	1355
SP-24	1	✱	4	2010'-5"	1343
SPIRAL COLUMN REINFORCING STEEL				LBS.	5443
CLASS "A" CONCRETE BREAKDOWN					
POUR #1 FOOTING				CY.	78.4
POUR #2 COLUMNS				CY.	73.6
POUR #3 CAP				CY.	62.2
CLASS "A" CONCRETE				CY.	214.2
FOUNDATION EXCAVATION					LUMP SUM
HP14x73 STEEL PILES				NO.	24
				LIN. FT.	690

✱ THE SP-21, SP-22, SP-23, AND SP-24 SPIRAL REINFORCING STEEL SHALL BE W20 OR D-20 COLD DRAWN WIRE OR #4 PLAIN OR DEFORMED BAR.

PROJECT NO. U-2579B
FORSYTH COUNTY
STATION: 628+65.50 -L-

SHEET 3 OF 3

DocuSigned by: Steven K. Doerrer
A2203DBEFA1D43F...
8/8/2014

NORTH CAROLINA PROFESSIONAL SEAL 16572 ENGINEER STEVEN K. DOERRER

Prepared by:
JACOBS
JACOBS ENGINEERING GROUP
111 CORNING ROAD, SUITE 200
CARY, NORTH CAROLINA 27518
TEL: (919) 859-5000

DWG. NO. 36 OF 44

STATE OF NORTH CAROLINA
DEPARTMENT OF TRANSPORTATION
RALEIGH

SUBSTRUCTURE
BENT 2
FOOTING PLAN AND BILL OF MATERIALS
RIGHT LANE

REVISIONS						SHEET NO.
NO.	BY:	DATE:	NO.	BY:	DATE:	S-389
1			3			TOTAL SHEETS
2			4			707

DRAWN BY : HLS DATE : 7/28/14
CHECKED BY : OKH DATE : 8/1/14

$$$$$$SYSTIME$$$$$ $$$$$$$$$$$$$$$$$$$$DGN$$$$$$$$$$$$$$$$$$$$ $$$$USERNAME$$$$