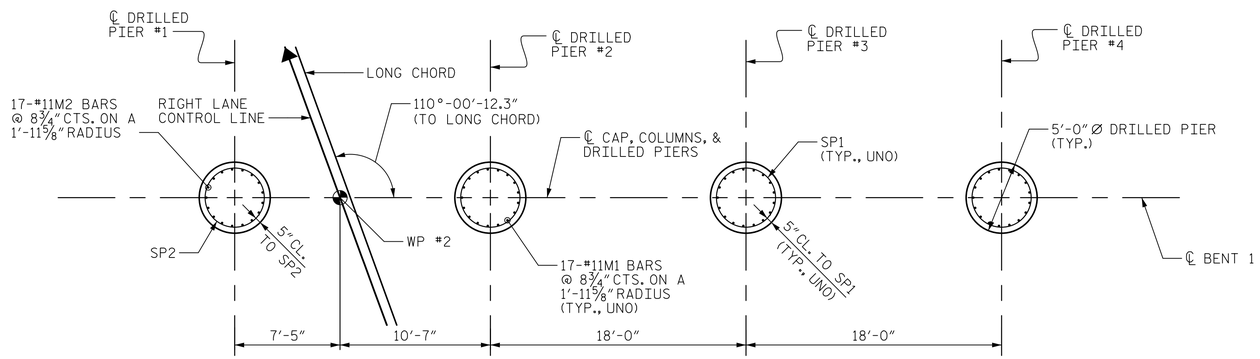

DRILLED PIER PLAN

BAR TYPES

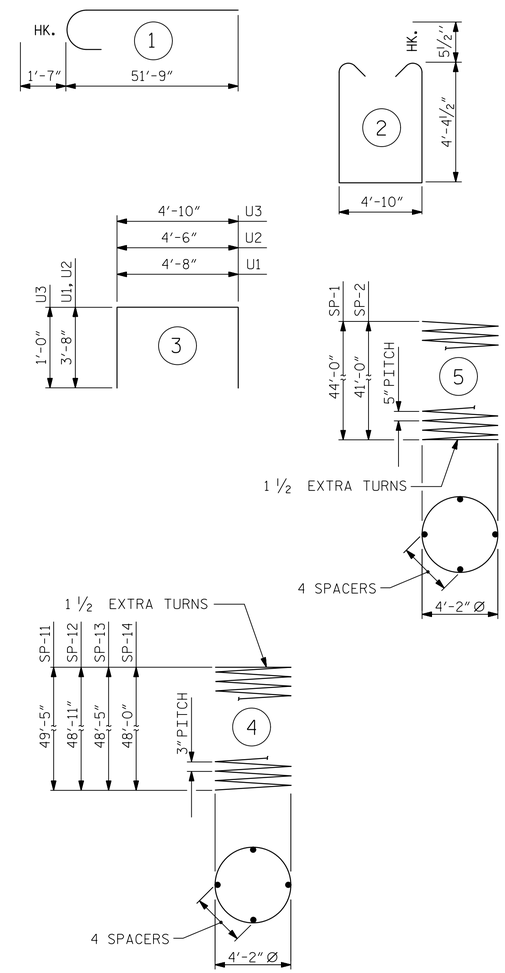

ALL BAR DIMENSIONS ARE OUT TO OUT.

BILL OF MATERIAL
BENT NO. 1

BAR	NO.	SIZE	TYPE	LENGTH	WEIGHT (LBS)
B1	8	#9	STR	50'-0"	1360
B2	8	#9	STR	23'-6"	639
B3	8	#10	STR	50'-0"	1721
B4	8	#10	STR	22'-9"	783
B5	20	#5	STR	33'-6"	699
B6	16	#4	STR	8'-2"	87
B7	32	#4	STR	11'-8"	249
M1	51	#11	STR	54'-0"	14632
M2	17	#11	STR	51'-0"	4606
S1	162	#5	2	14'-6"	2450
U1	8	#4	3	12'-0"	64
U2	8	#4	3	11'-10"	63
U3	66	#4	3	6'-10"	301
V1	68	#11	1	53'-4"	19268
REINFORCING STEEL				LBS.	46925
SP-1	3	*	5	1450'-5"	4538
SP-2	1	*	5	1357'-1"	1415
SP-11	1	**	4	2598'-0"	1735
SP-12	1	**	4	2574'-2"	1720
SP-13	1	**	4	2550'-4"	1704
SP-14	1	**	4	2526'-6"	1688
SPIRAL COLUMN REINFORCING STEEL				LBS.	12800
CLASS "A" CONCRETE BREAKDOWN					
POUR #2 COLUMNS				CY.	116.0
POUR #3 CAP				CY.	62.2
CLASS "A" CONCRETE				CY.	178.2
5'-0"Ø DRILLED PIERS					
DRILLED PIER CONCRETE				CY.	117.1
5'-0"Ø DRILLED PIERS NOT IN SOIL				LF.	60.0
5'-0"Ø DRILLED PIERS IN SOIL				LF.	101.0
PERMANENT STEEL CASING FOR 5'-0"Ø DRILLED PIER				LF.	72.0
SID INSPECTIONS				TOTAL	1
CSL TESTING				TOTAL	1
*** CSL TUBES				L.F.	835'-0"

* THE SP-1 AND SP-2, SPIRAL REINFORCING STEEL SHALL BE W31 OR D-31 COLD DRAWN WIRE OR #5 PLAIN OR DEFORMED BAR.

** THE SP-11, SP-12, SP-13, AND SP-14 SPIRAL REINFORCING STEEL SHALL BE W20 OR D-20 COLD DRAWN WIRE OR #4 PLAIN OR DEFORMED BAR.

*** NO SEPARATE PAYMENT WILL BE MADE FOR CSL TUBES. CSL TUBES WILL BE INCLUDED IN THE UNIT BID PRICE FOR DRILLED PIERS.

PROJECT NO. U-2579B
FORSYTH COUNTY
STATION: 628+65.50 -L-

SHEET 3 OF 3

DocuSigned by: Steven K. Doerner
A22D3DBEFA1D43F...
8/8/2014

NORTH CAROLINA PROFESSIONAL SEAL 16572 ENGINEER STEVEN K. DOERNER

Prepared by:
JACOBS
JACOBS ENGINEERING GROUP
111 CORNING ROAD, SUITE 200
CARY, NORTH CAROLINA 27518
TEL: (919) 859-5000

DWG. NO. 33 OF 44

STATE OF NORTH CAROLINA
DEPARTMENT OF TRANSPORTATION
RALEIGH

SUBSTRUCTURE

BENT 1
DRILLED PIER DETAILS
AND BILL OF MATERIALS
RIGHT LANE

REVISIONS						SHEET NO.
NO.	BY:	DATE:	NO.	BY:	DATE:	S-386
1			3			TOTAL SHEETS
2			4			707

DRAWN BY : EML DATE : 7/24/14
CHECKED BY : OKH DATE : 7/29/14

$$$$$$SYSTIME$$$$$
$$$$$$$$$$$$$$$$$$$$$$DGN$$$$$$$$$$$$$$$$$$$$$$
$$$$USERNAME$$$$