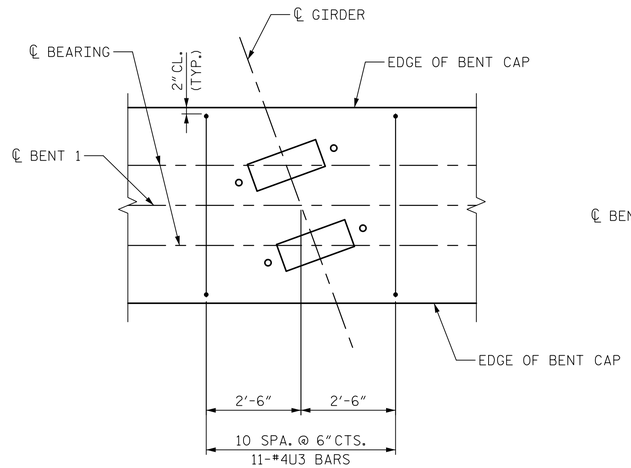

DETAIL "A"

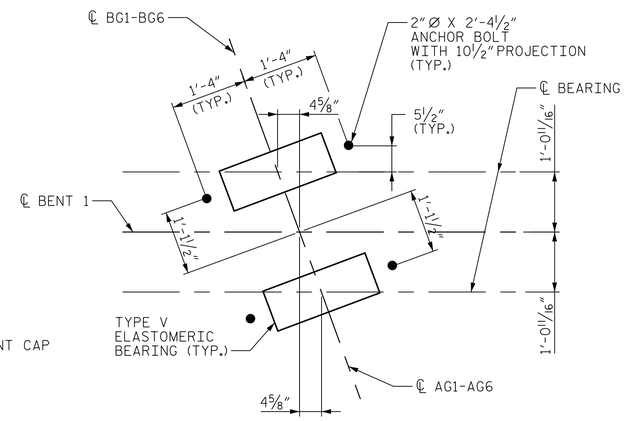

ANCHOR BOLT LAYOUT DETAIL

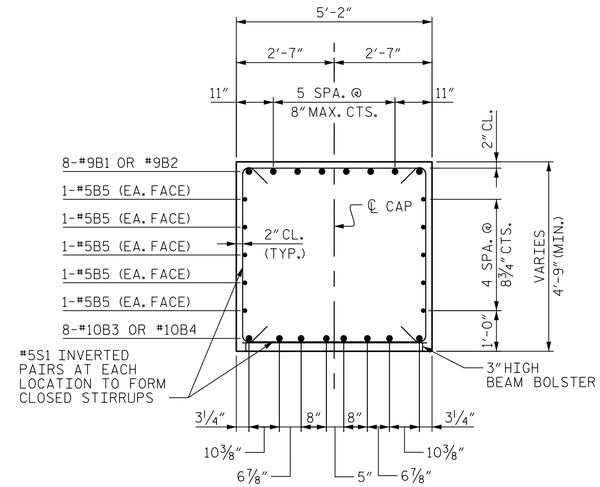

SECTION A-A

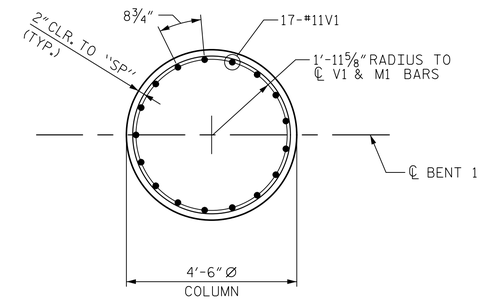

SECTION B-B

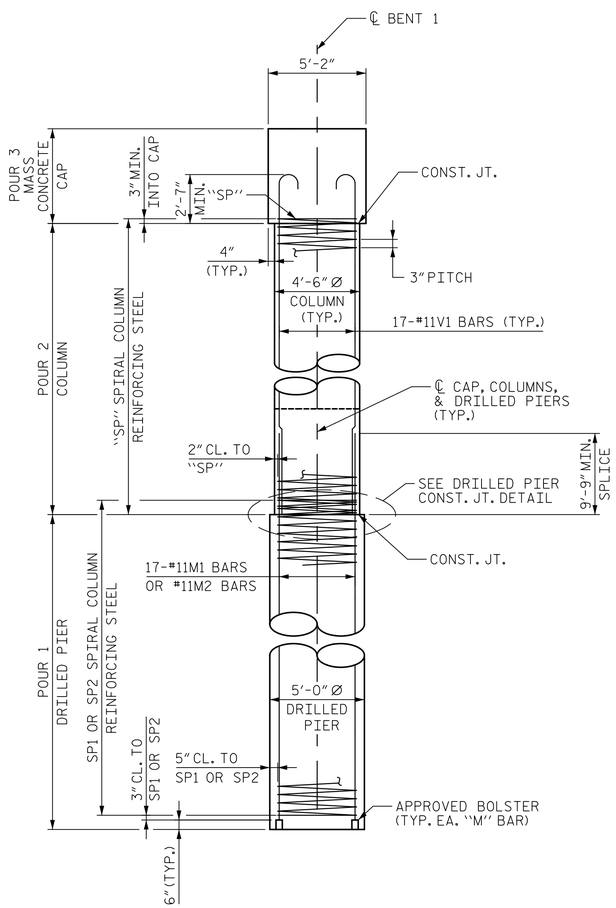

END ELEVATION

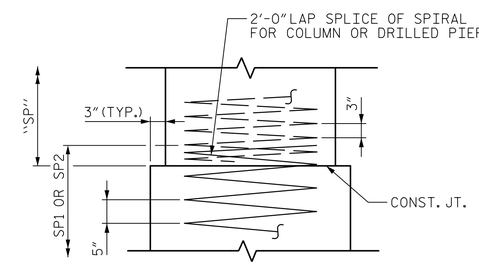

DRILLED PIER
CONSTRUCTION JOINT DETAIL

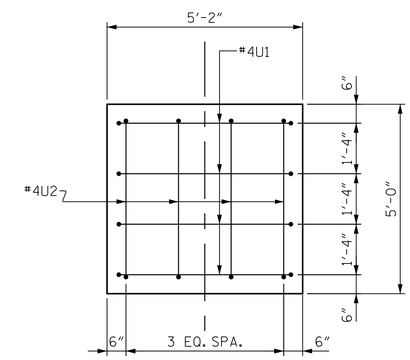

VIEW C-C

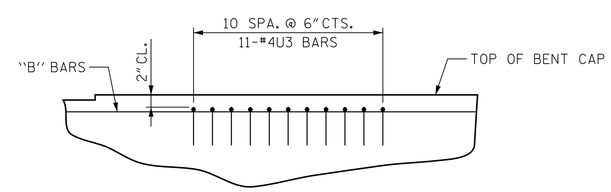

BEARING AREA
REINFORCEMENT DETAIL

PROJECT NO. U-2579B
FORSYTH COUNTY
STATION: 628+65.50 -L-

SHEET 2 OF 3

DocuSigned by: Steven K Doerer A22D3DBEFA1D43F... 8/7/2014

NORTH CAROLINA PROFESSIONAL SEAL 16572 ENGINEER STEVEN K. DOERER

Prepared by:
JACOBS
JACOBS ENGINEERING GROUP
111 CORNING ROAD, SUITE 200
CARY, NORTH CAROLINA 27518
TEL: (919) 859-5000

STATE OF NORTH CAROLINA
DEPARTMENT OF TRANSPORTATION
RALEIGH

SUBSTRUCTURE

BENT 1 DETAILS

RIGHT LANE

REVISIONS						SHEET NO.
NO.	BY:	DATE:	NO.	BY:	DATE:	S-385
1			3			TOTAL SHEETS
2			4			707

DWG. NO. 32 OF 44

DRAWN BY : EML DATE : 7/23/14
CHECKED BY : OKH DATE : 7/29/14

$$$$$$SYSTIME$$$$$
$$$$$$$$$$$$$$$$$$$$$$$$DGN$$$$$$$$$$$$$$$$$$$$$$$$
$$$$USERNAME$$$$