BAR TYPES

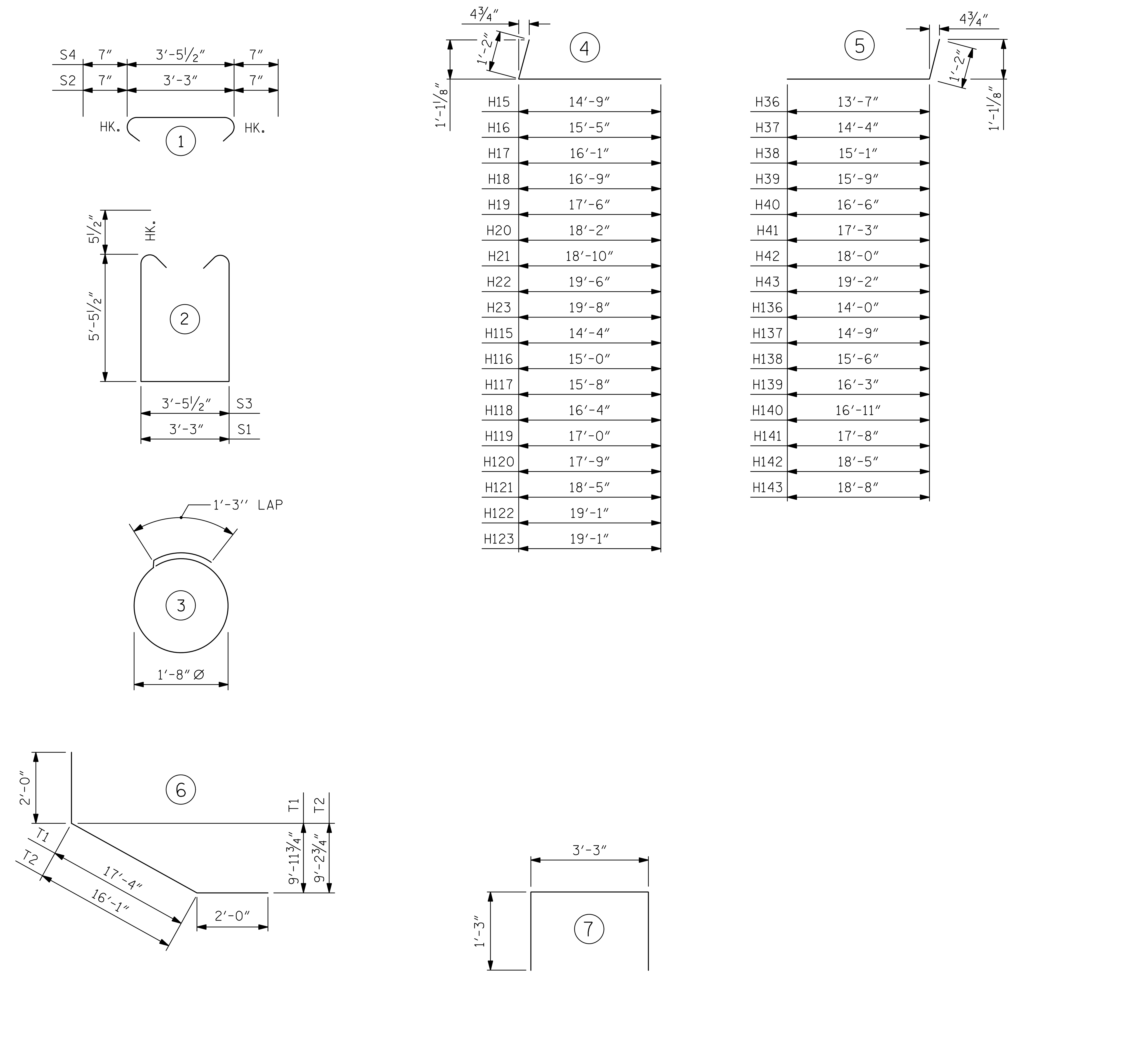

ALL BAR DIMENSIONS ARE OUT TO OUT.

REINFORCING BAR SCHEDULE

BAR	NO.	SIZE	TYPE	LENGTH	WEIGHT (LBS)
B1	9	#9	STR	60′-0″	1836
B2	9	#9	STR	18′-6″	566
B3	20	#4	STR	11′-9	157
B4	24	#5	STR	37′-8″	943
B5	12	#4	STR	25′-8″	206
B6	20	#4	STR	3′-3″	43
H1	1	#7	STR	7′-1″	14
H2	1	#7	STR	7′-9″	16
H3	1	#7	STR	8′-5″	17
H4	1	#7	STR	9′-1″	19
H5	1	#7	STR	9′-9″	20
H6	1	#7	STR	10′-5″	21
H7	1	#7	STR	11′-0″	22
H8	1	#7	STR	11′-8″	24
H9	1	#7	STR	12′-4″	25
H10	1	#7	STR	13′-0″	27
H11	1	#7	STR	13′-8″	28
H12	1	#7	STR	14′-4″	29
H13	1	#7	STR	15′-0″	31
H14	1	#7	STR	15′-8″	32
H15	1	#7	4	15′-11″	33
H16	1	#7	4	16′-7″	34
H17	1	#7	4	17′-3″	35
H18	1	#7	4	17′-11″	37
H19	1	#7	4	18′-8″	38
H20	1	#7	4	19′-4″	39
H21	1	#7	4	20′-0″	41
H22	1	#7	4	20′-8″	42
H23	6	#7	4	20′-10″	256
H24	1	#7	STR	6′-8″	14
H25	1	#7	STR	7′-5″	15
H26	1	#7	STR	8′-1″	17
H27	1	#7	STR	8′-10″	18
H28	1	#7	STR	9′-6″	19
H29	1	#7	STR	10′-3″	21
H30	1	#7	STR	10′-11″	22
H31	1	#7	STR	11′-8″	24
H32	1	#7	STR	12′-4″	25
H33	1	#7	STR	13′-1″	27
H34	1	#7	STR	13′-9″	28
H35	1	#7	STR	14′-6″	30
H36	1	#7	5	14′-9″	30
H37	1	#7	5	15′-6″	32
H38	1	#7	5	16′-3″	33
H39	1	#7	5	16′-11″	35
H40	1	#7	5	17′-8″	36
H41	1	#7	5	18′-5″	38
H42	1	#7	5	19′-2″	39
H43	6	#7	5	20′-4″	249
H101	1	#7	STR	6′-8″	14
H102	1	#7	STR	7′-4″	15
H103	1	#7	STR	8′-0″	16
H104	1	#7	STR	8′-8″	18
H105	1	#7	STR	9′-4″	19
H106	1	#7	STR	9′-11″	20
H107	1	#7	STR	10′-7″	22

BAR	NO.	SIZE	TYPE	LENGTH	WEIGHT (LBS)
H108	1	#7	STR	11′-3″	23
H109	1	#7	STR	11′-11″	24
H110	1	#7	STR	12′-7″	26
H111	1	#7	STR	13′-3″	27
H112	1	#7	STR	13′-11″	28
H113	1	#7	STR	14′-7″	30
H114	1	#7	STR	15′-3″	31
H115	1	#7	4	15′-6″	32
H116	1	#7	4	16′-2″	33
H117	1	#7	4	16′-10″	34
H118	1	#7	4	17′-6″	36
H119	1	#7	4	18′-2″	37
H120	1	#7	4	18′-11″	39
H121	1	#7	4	19′-7″	40
H122	1	#7	4	20′-3″	41
H123	6	#7	4	20′-3″	248
H124	1	#7	STR	7′-1″	14
H125	1	#7	STR	7′-10″	16
H126	1	#7	STR	8′-6″	17
H127	1	#7	STR	9′-3″	19
H128	1	#7	STR	9′-11″	20
H129	1	#7	STR	10′-8″	22
H130	1	#7	STR	11′-4″	23
H131	1	#7	STR	12′-1″	25
H132	1	#7	STR	12′-9″	26
H133	1	#7	STR	13′-6″	28
H134	1	#7	STR	14′-3″	29
H135	1	#7	STR	14′-11″	30
H136	1	#7	5	15′-2″	31
H137	1	#7	5	15′-11″	33
H138	1	#7	5	16′-8″	34
H139	1	#7	5	17′-5″	36
H140	1	#7	5	18′-1″	37
H141	1	#7	5	18′-10″	39
H142	1	#7	5	19′-7″	40
H143	6	#7	5	19′-10″	243
K1	54	#7	STR	2′-9″	304
S1	67	#5	2	15′-1″	1054
S2	67	#5	1	4′-5″	309
S3	2	#5	2	15′-3½″	32
S4	2	#5	1	4′-7″	10
S5	116	#5	STR	3′-0″	363
S6	42	#4	3	6′-6″	182
T1	2	#5	6	21′-4″	45
T2	2	#5	6	20′-1″	42
U1	56	#4	7	5′-9″	215
V1	26	#5	STR	8′-0″	217
V2	10	#5	STR	6′-5″	67
V3	2	#5	STR	6′-5″	13
V4	2	#5	STR	6′-5″	13
V5	2	#5	STR	6′-5″	13
V6	2	#5	STR	5′-8″	12

BAR	NO.	SIZE	TYPE	LENGTH	WEIGHT (LBS)
V7	2	#5	STR	4′-11″	10
V8	2	#5	STR	4′-3″	9
V9	2	#5	STR	3′-6″	7
V10	2	#5	STR	2′-10″	6
V11	2	#5	STR	6′-3″	13
V12	2	#5	STR	6′-2″	13
V13	2	#5	STR	6′-2″	13
V14	2	#5	STR	6′-2″	13
V15	2	#5	STR	5′-5″	11
V16	2	#5	STR	4′-9″	10
V17	2	#5	STR	4′-0″	8
V18	2	#5	STR	3′-4″	7
V19	2	#5	STR	2′-7″	5
V20	2	#5	STR	2′-0″	4
V21	25	#5	STR	7′-6″	196
V22	9	#5	STR	6′-2″	58
V23	2	#5	STR	6′-2″	13
V24	2	#5	STR	6′-2″	13
V25	2	#5	STR	6′-2″	13
V26	2	#5	STR	6′-1″	13
V27	2	#5	STR	4′-9″	10
V28	2	#5	STR	4′-0″	8
V29	2	#5	STR	3′-4″	7
V30	2	#5	STR	2′-7″	5
V31	2	#5	STR	6′-0″	13
V32	2	#5	STR	6′-0″	13
V33	2	#5	STR	5′-11″	12
V34	2	#5	STR	5′-3″	11
V35	2	#5	STR	4′-6″	9
V36	2	#5	STR	3′-10″	8
V37	2	#5	STR	3′-1″	6
V38	2	#5	STR	2′-5″	5
V39	2	#5	STR	2′-0″	4

REINFORCING STEEL	LBS.	10429
CLASS "A" CONCRETE BREAKDOWN		
POUR #1 PILE CAP	CY.	65.8
POUR #1 WINGWALL 1	CY.	2.6
POUR #1 WINGWALL 2	CY.	2.3
CLASS "A" CONCRETE	CY.	70.7
HP12x53 STEEL PILES	NO.	14
	LIN. FT.	840

PROJECT NO. U-2579B

FORSYTH COUNTY

STATION: 628+65.50 -L-

SHEET 4 OF 4

DocuSigned by:
Steven K Doerrer
A22D3DBEFA1D43F...
8/8/2014

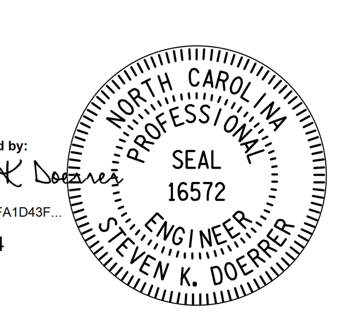

Prepared by:
JACOBS
JACOBS ENGINEERING GROUP
111 CORNING ROAD, SUITE 200
CARY, NORTH CAROLINA 27518
TEL: (919) 859-5000

DWG. NO. 30 OF 44

STATE OF NORTH CAROLINA
DEPARTMENT OF TRANSPORTATION
RALEIGH

SUBSTRUCTURE

INTEGRAL END BENT 1
BILL OF MATERIALS

RIGHT LANE

REVISIONS						SHEET NO.
NO.	BY:	DATE:	NO.	BY:	DATE:	S-383
1			3			TOTAL SHEETS
2			4			707

DRAWN BY : HLS DATE : 7/21/14
CHECKED BY : JBT DATE : 7/25/14

$$$$$$SYSTIME$$$$$
$$$$$$$$$$$$$$$$$$$$$$$$DGN$$$$$$$$$$$$$$$$$$$$$$$$
$$$$USERNAME$$$$