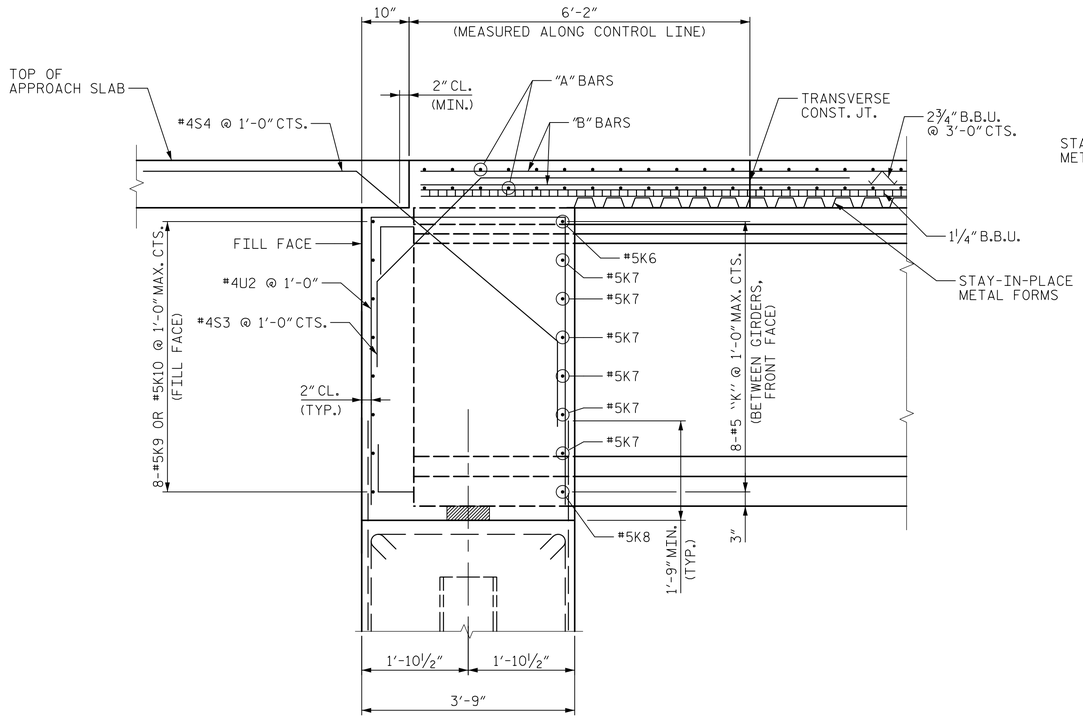

SECTION A-A

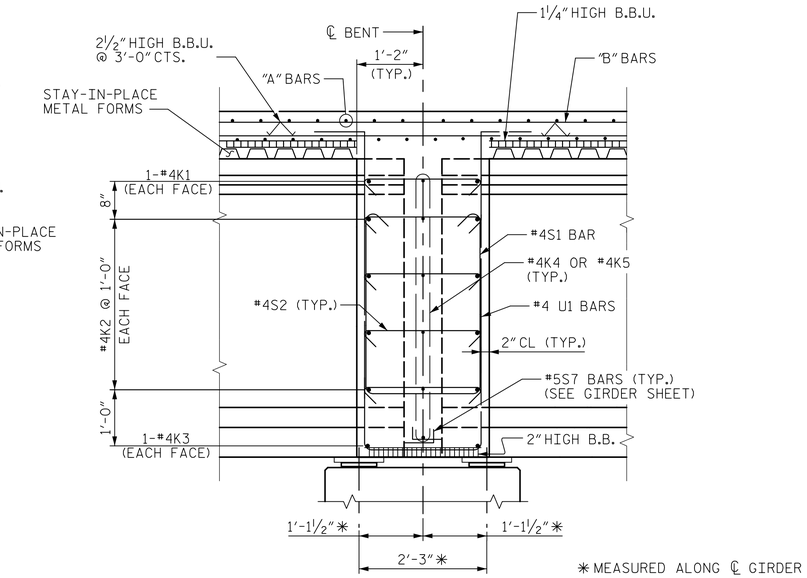

SECTION B-B

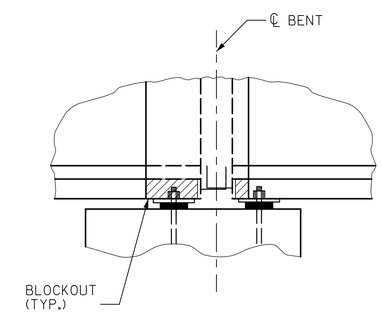

BLOCKOUT DETAIL

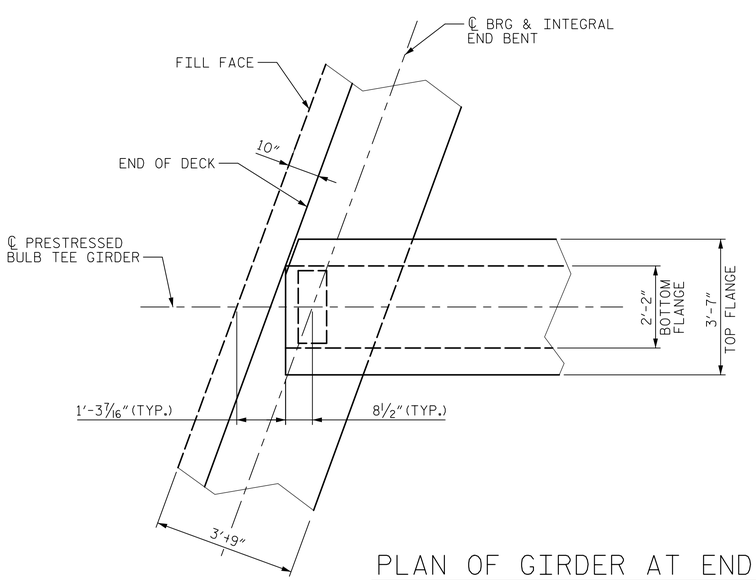

PLAN OF GIRDER AT END BENT

END BENT 1 SHOWN, END BENT 2 MIRRORED

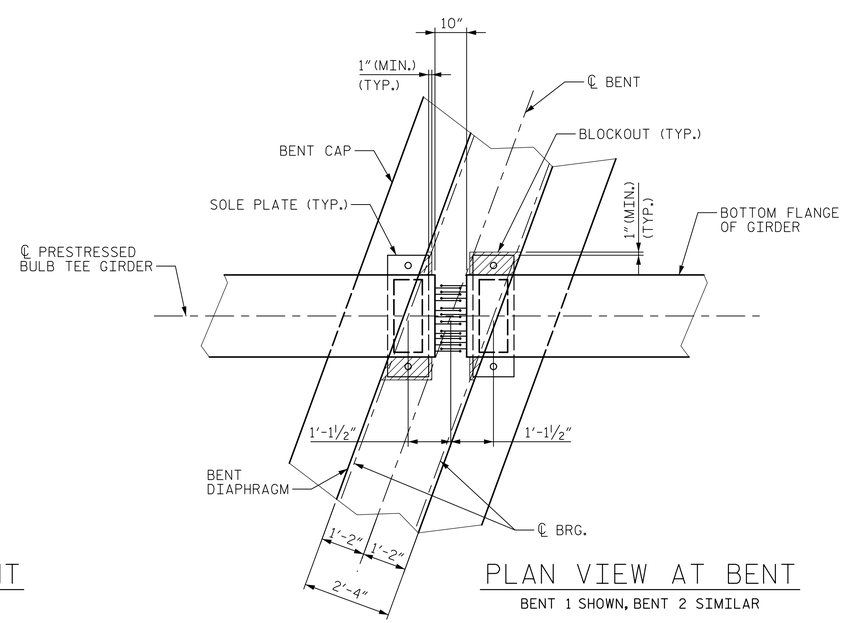

PLAN VIEW AT BENT

BENT 1 SHOWN, BENT 2 SIMILAR

PROJECT NO. U-2579B

FORSYTH COUNTY

STATION: 628+65.50 -L-

DocuSigned by: Steven K. Doerrer A22D3DBEFA1D43F...
8/7/2014

NORTH CAROLINA PROFESSIONAL SEAL 16572 ENGINEER STEVEN K. DOERRER

Prepared by:
JACOBS
JACOBS ENGINEERING GROUP
111 CORNING ROAD, SUITE 200
CARY, NORTH CAROLINA 27518
TEL: (919) 859-5000

DWG. NO. 8 OF 44

STATE OF NORTH CAROLINA
DEPARTMENT OF TRANSPORTATION
RALEIGH

SUPERSTRUCTURE

SECTIONS & DETAILS

RIGHT LANE

REVISIONS						SHEET NO.
NO.	BY:	DATE:	NO.	BY:	DATE:	S-361
1			3			TOTAL SHEETS
2			4			707

DRAWN BY : EML DATE : 7/1/14
CHECKED BY : JBT DATE : 7/8/14

$$$$$SYSTIME$$$$$
$$$$$$$$$$$$$$$$$$$$$$$$$$$$$$$$$$$$DGN$$$$$$$$$$$$$$$$$$$$$$$$
$$$$USERNAME$$$$