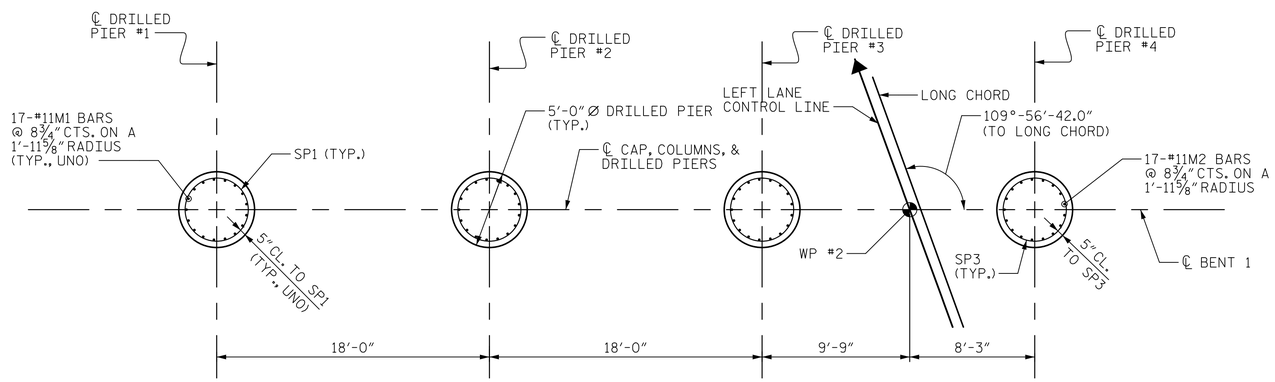

DRILLED PIER PLAN

BAR TYPES

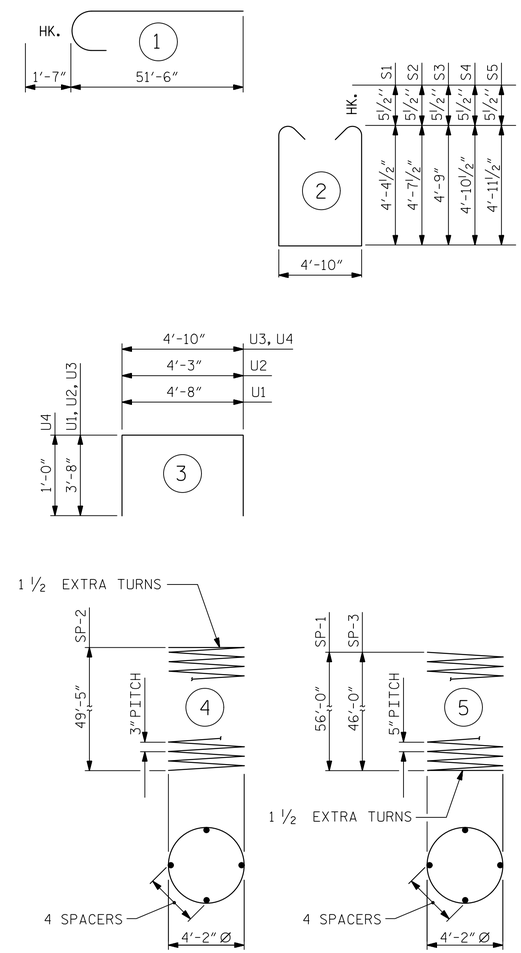

ALL BAR DIMENSIONS ARE OUT TO OUT.

BILL OF MATERIAL
BENT NO. 1

BAR	NO.	SIZE	TYPE	LENGTH	WEIGHT (LBS)
B1	8	#9	STR	50'-0"	1360
B2	8	#9	STR	23'-5"	637
B3	8	#10	STR	50'-0"	1721
B4	8	#10	STR	22'-7"	777
B5	20	#5	STR	33'-5"	697
B6	8	#4	STR	8'-2"	44
B7	24	#4	STR	11'-8"	187
M1	102	#11	STR	37'-9"	20458
M2	17	#11	STR	56'-0"	5058
S1	50	#5	2	14'-6"	756
S2	32	#5	2	15'-0"	501
S3	30	#5	2	15'-3"	477
S4	24	#5	2	15'-6"	388
S5	26	#5	2	15'-8"	425
U1	8	#4	3	12'-0"	64
U2	4	#4	3	11'-7"	31
U3	4	#4	3	12'-2"	33
U4	66	#4	3	6'-10"	301
V1	68	#11	1	53'-4"	19268
REINFORCING STEEL				LBS.	53183
SP-1	3	*	5	1823'-8"	5706
SP-2	4	**	4	2601'-0"	6950
SP-3	1	*	5	1512'-8"	1578
SPIRAL COLUMN					
REINFORCING STEEL				LBS.	14234
CLASS "A" CONCRETE BREAKDOWN					
POUR #2 COLUMNS				CY.	115.2
POUR #3 CAP				CY.	59.3
CLASS "A" CONCRETE				CY.	174.5
5'-0" Ø DRILLED PIERS					
DRILLED PIER CONCRETE				CY.	146.9
5'-0" Ø DRILLED PIERS NOT IN SOIL				LF.	43.0
5'-0" Ø DRILLED PIERS IN SOIL				LF.	159.0
PERMANENT STEEL CASING FOR 5'-0" Ø DRILLED PIER				LF.	132.0
SID INSPECTIONS				TOTAL	1
CSL TESTING				TOTAL	1
*** CSL TUBES				LF.	1040.0

* THE SP-1 AND SP-3 SPIRAL REINFORCING STEEL SHALL BE W31 OR D-31 COLD DRAWN WIRE OR #5 PLAIN OR DEFORMED BAR.

** THE SP-2 SPIRAL REINFORCING STEEL SHALL BE W20 OR D-20 COLD DRAWN WIRE OR #4 PLAIN OR DEFORMED BAR.

*** NO SEPARATE PAYMENT WILL BE MADE FOR CSL TUBES. CSL TUBES WILL BE INCLUDED IN THE UNIT BID PRICE FOR DRILLED PIERS.

PROJECT NO. U-2579B
FORSYTH COUNTY
STATION: 628+65.50 -L-

SHEET 3 OF 3

DocuSigned by: Steven K Doerfler
A22D3DBEFA1D43F...
9/25/2014

NORTH CAROLINA PROFESSIONAL SEAL 16572 ENGINEER STEVEN K. DOERFLER

Prepared by:
JACOBS
JACOBS ENGINEERING GROUP
111 CORNING ROAD, SUITE 200
CARY, NORTH CAROLINA 27518
TEL: (919) 859-5000

DWG. NO. 33 OF 44

STATE OF NORTH CAROLINA
DEPARTMENT OF TRANSPORTATION
RALEIGH

SUBSTRUCTURE

BENT 1
DRILLED PIER DETAILS
AND BILL OF MATERIALS
LEFT LANE

REVISIONS						SHEET NO.
NO.	BY:	DATE:	NO.	BY:	DATE:	S-342
1			3			TOTAL SHEETS
2			4			707

DRAWN BY : HLS DATE : 7/25/14
CHECKED BY : OKH DATE : 7/28/14