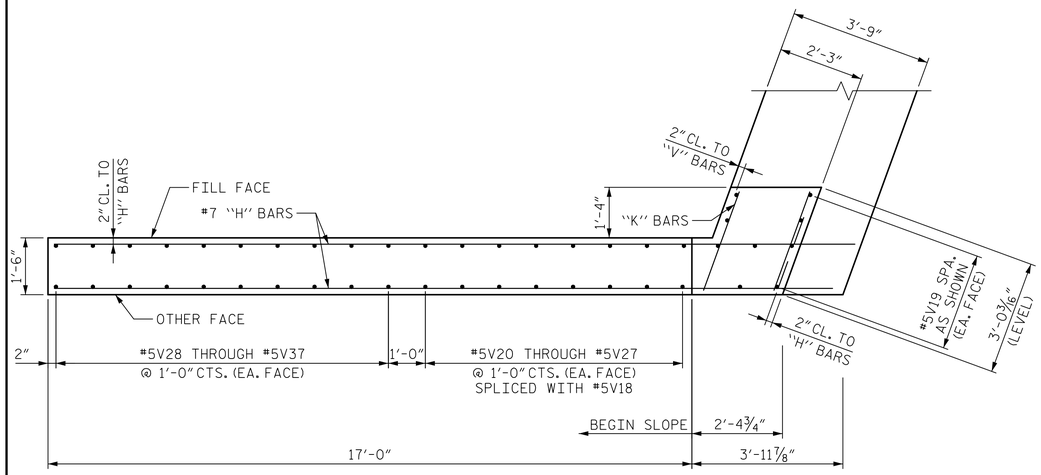

PLAN RIGHT WING WALL - (W2)

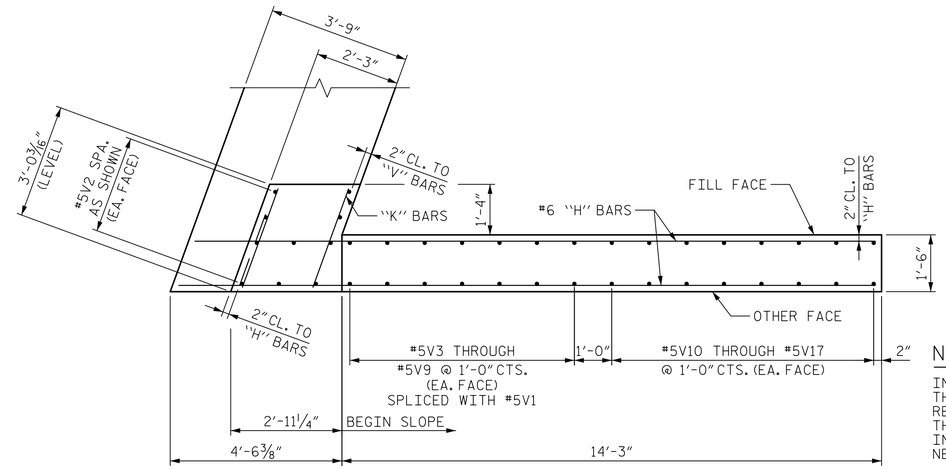

PLAN LEFT WING WALL - (W1)

NOTES:

INSTALL THE 4" Ø DRAIN PIPE THROUGH THE WING WALL AS REQUIRED. FOR REINFORCED BRIDGE APPROACH FILLS, SEE THE ROADWAY PLANS. REINFORCING STEEL IN THE WING WALL MAY BE SHIFTED AS NECESSARY TO CLEAR THE DRAIN PIPE.

FOR SECTIONS B-B & C-C, SEE "INTEGRAL END BENT 1 DETAILS" SHEET.

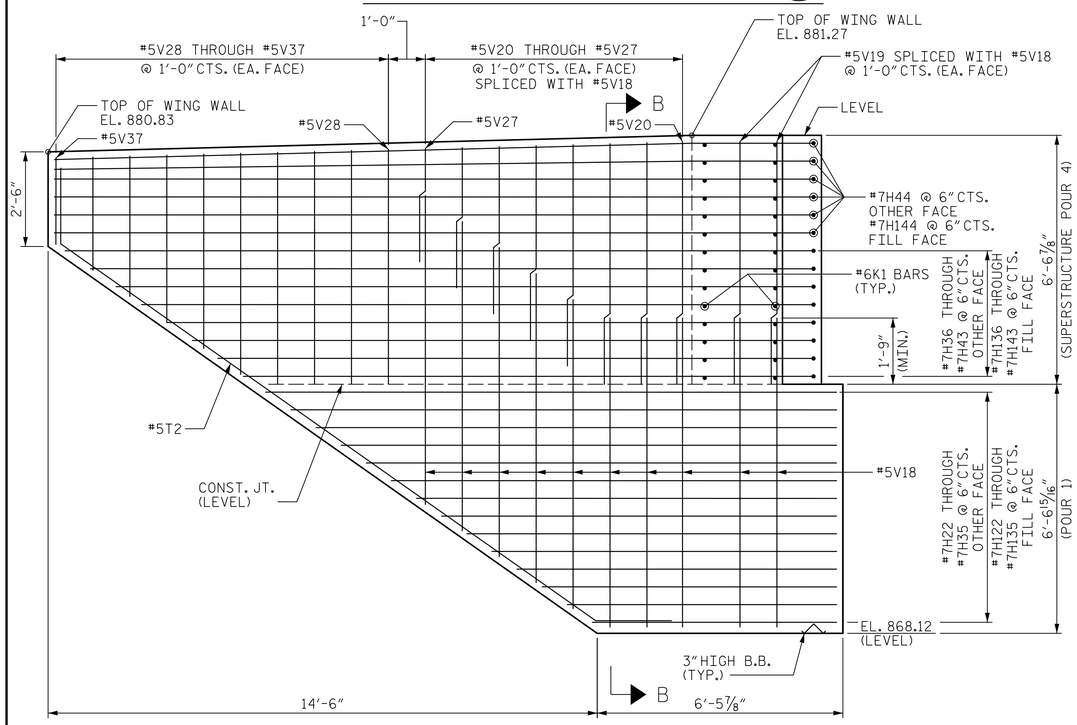

ELEVATION RIGHT WING WALL - (W2)

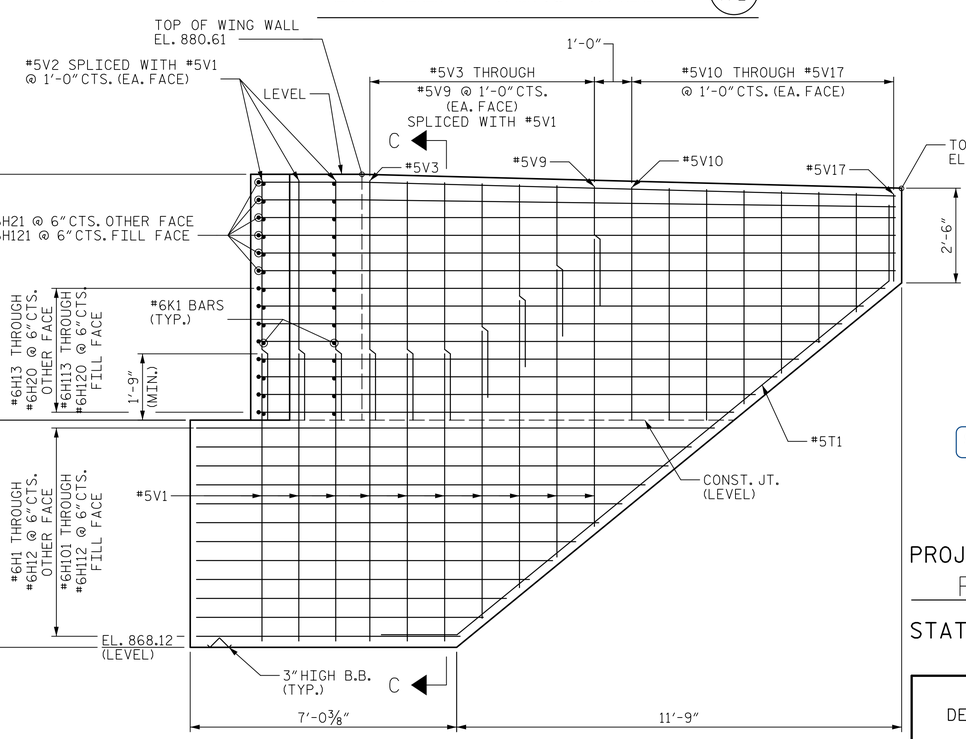

ELEVATION LEFT WING WALL - (W1)

DocuSigned by: Steven K. Doerner
A2203DBEFA1D43F...
8/8/2014

NORTH CAROLINA PROFESSIONAL SEAL 16572 ENGINEER STEVEN K. DOERNER

PROJECT NO. U-2579B

FORSYTH COUNTY

STATION: 628+65.50 -L-

SHEET 2 OF 4

STATE OF NORTH CAROLINA
DEPARTMENT OF TRANSPORTATION
RALEIGH

SUBSTRUCTURE

INTEGRAL END BENT 1
WING WALLS

LEFT LANE

Prepared by:
JACOBS
JACOBS ENGINEERING GROUP
111 CORNING ROAD, SUITE 200
CARY, NORTH CAROLINA 27518
TEL: (919) 859-5000

DWG. NO. 28 OF 44

REVISIONS						SHEET NO.
NO.	BY:	DATE:	NO.	BY:	DATE:	S-337
1			3			TOTAL SHEETS
2			4			707

DRAWN BY : HLS DATE : 7/14/14
CHECKED BY : JBT DATE : 7/22/14

$$$$$$SYSTIME$$$$$
$$$$$$$$$$$$$$$$$$$$$$$$DGN$$$$$$$$$$$$$$$$$$$$$$$$
$$$$USERNAME$$$$