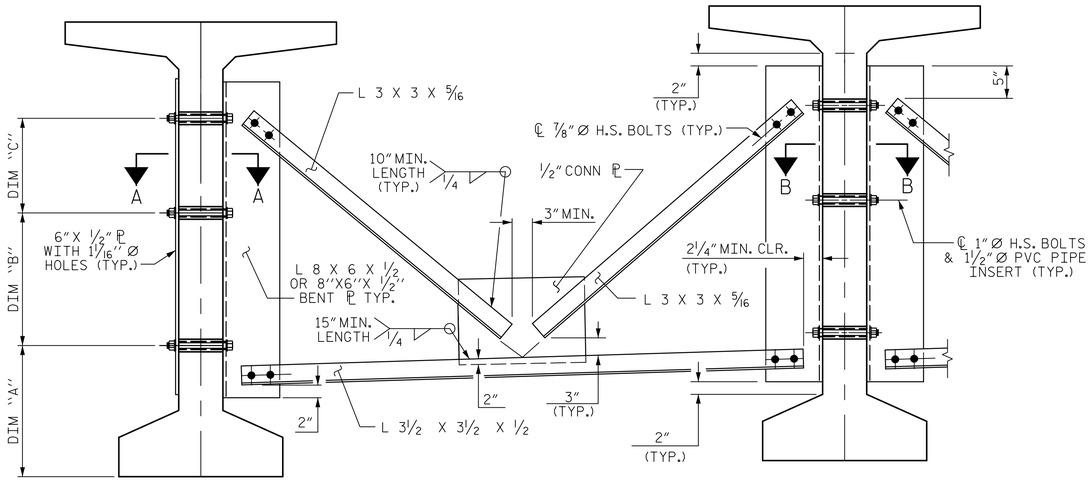

EXTERIOR GIRDER

INTERIOR GIRDER

PART SECTION AT INTERMEDIATE DIAPHRAGM

(63" BULB TEE GIRDER SHOWN)

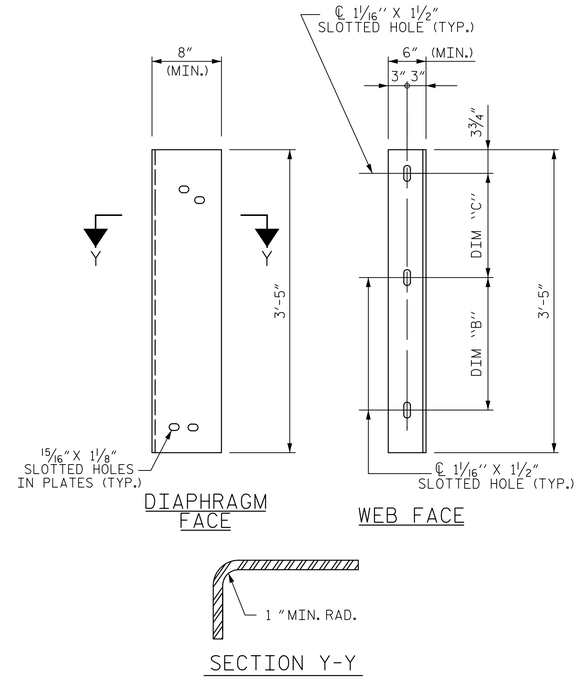

DIAPHRAGM FACE

WEB FACE

SECTION Y-Y

CONNECTOR PLATE DETAIL

STRUCTURAL STEEL NOTES

ALL INTERMEDIATE DIAPHRAGM STEEL AND CONNECTOR PLATES SHALL BE AASHTO M270 GRADE 50 OR APPROVED EQUAL.

TENSION ON THE ASTM A325 BOLTS THROUGH THE ANGLE MEMBER SHALL BE CALIBRATED USING DIRECT TENSION INDICATOR WASHERS IN ACCORDANCE WITH THE STANDARD SPECIFICATIONS.

TENSION ON THE ASTM A449 BOLTS THROUGH THE GIRDER WEB SHALL BE SNUG TIGHTENED FOLLOWED BY AN ADDITIONAL 1/4 TURN.

THE PLATES, BENT PLATES, AND ANGLES SHALL BE GALVANIZED OR METALLIZED IN ACCORDANCE WITH THE STANDARD SPECIFICATIONS. FOR THERMAL SPRAYED COATINGS (METALLIZATION), SEE SPECIAL PROVISIONS.

FOR METALLIZATION, APPLY AN 8 MIL THICK 99.99 PERCENT ZINC (W-Zn-1) THERMAL SPRAYED COATING WITH A 0.5 MIL THICK SEAL COAT TO ALL STEEL DIAPHRAGM SURFACES IN ACCORDANCE WITH THE THERMAL SPRAYED COATINGS SPECIAL PROVISION AND SECTION 442 OF THE STANDARD SPECIFICATIONS.

GALVANIZE THE HIGH STRENGTH BOLTS, NUTS, WASHERS AND DIRECT TENSION INDICATORS IN ACCORDANCE WITH THE STANDARD SPECIFICATIONS.

USE AN ASTM F436 HARDENED WASHER WITH STANDARD AND SLOTTED HOLES UNDER EACH BOLT HEAD AND NUT.

FOR BOLTS THROUGH THE GIRDER WEB, PROVIDE SUFFICIENT LENGTH OF THREADS ON ALL BOLTS TO ACCOMMODATE WASHERS AND THE THICKNESS OF CONNECTING MEMBER PLUS AT LEAST 1/4" PROJECTION BEYOND THE NUT.

INTERMEDIATE DIAPHRAGM ASSEMBLY SHALL COMPLY WITH SECTION 1072 OF THE STANDARD SPECIFICATIONS.

SUBMIT TWO SETS OF WORKING DRAWINGS FOR THE INTERMEDIATE DIAPHRAGM ASSEMBLY FOR REVIEW, COMMENTS AND ACCEPTANCE. AFTER REVIEW, COMMENTS, AND ACCEPTANCE, SUBMIT SEVEN SETS FOR DISTRIBUTION.

IN THE EXTERIOR BAYS, PLACE TEMPORARY STRUTS BETWEEN PRESTRESSED GIRDERS ADJACENT TO THE STEEL DIAPHRAGMS. STRUTS SHALL REMAIN IN PLACE 3 DAYS AFTER CONCRETE IS PLACED.

THE COST OF THE STEEL DIAPHRAGMS AND ASSEMBLIES SHALL BE INCLUDED IN THE UNIT PRICE BID FOR PRESTRESSED CONCRETE GIRDERS.

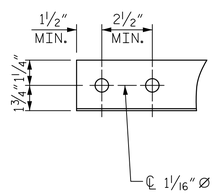

ANGLE END

(L 3 X 3 X 5/16)

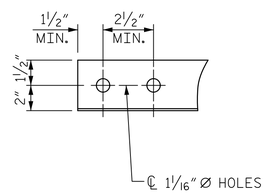

ANGLE END

(L 3 1/2 X 3 1/2 X 1/2)

SPAN	DIM "A"	DIM "B"	DIM "C"	DIM "D"	DIM "E"	DIM "F"	DIM "G"	DIM "H"
A	1'-4 1/4"	1'-4 3/4"	1'-4 3/4"	32'-7"	48'-11 7/8"	32'-7"	-	-
B	1'-4 1/4"	1'-4 3/4"	1'-4 3/4"	-	-	-	44'-6 7/8"	44'-6 7/8"
C	1'-4 1/4"	1'-4 3/4"	1'-4 3/4"	30'-1 7/8"	41'-4"	30'-1 7/8"	-	-

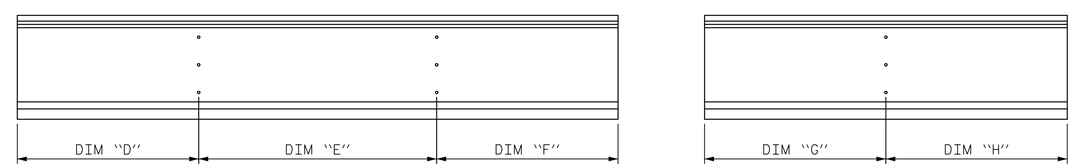

SPANS A AND C

SPAN B

GIRDER ELEVATION & PLACEMENT OF BOLT HOLES

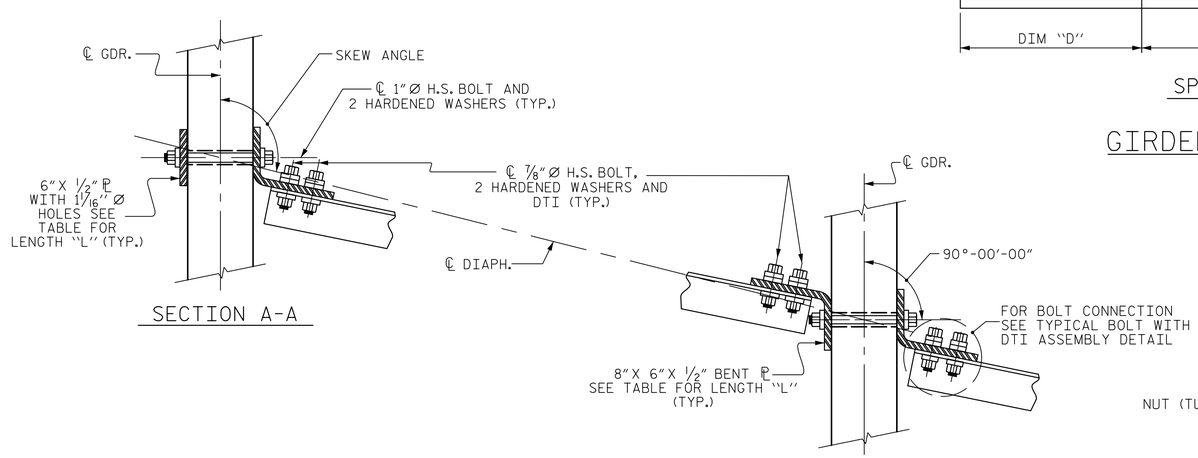

SECTION A-A

SECTION B-B

CONNECTION DETAILS

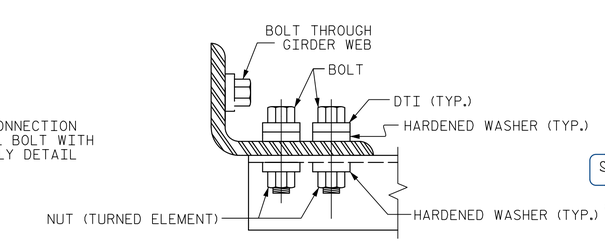

BOLT WITH DTI ASSEMBLY DETAIL

DocuSigned by: Steven K Doerner A22D3DBEFA1D43F...
8/6/2014

NORTH CAROLINA PROFESSIONAL SEAL 16572 ENGINEER STEVEN K. DOERNER

PROJECT NO. U-2579B

FORSYTH COUNTY

STATION: 628+65.50 -L-

STATE OF NORTH CAROLINA
DEPARTMENT OF TRANSPORTATION
RALEIGH

STANDARD
INTERMEDIATE
STEEL DIAPHRAGMS
FOR 63" MODIFIED
BULB TEE PRESTRESSED
CONCRETE GIRDERS
LEFT LANE

Prepared by:
JACOBS
JACOBS ENGINEERING GROUP
111 CORNING ROAD, SUITE 200
CARY, NORTH CAROLINA 27518
TEL: (919) 859-5000

DWG. NO. 22 OF 44

REVISIONS						SHEET NO.
NO.	BY:	DATE:	NO.	BY:	DATE:	S-331
1			3			TOTAL SHEETS
2			4			707

ASSEMBLED BY :	EML	DATE :	6/1/14
CHECKED BY :	JBT	DATE :	6/5/14
DRAWN BY :	RWW 11/09	ADDED REV. 10/11	11/23/09R
CHECKED BY :	GM 11/09	DATE :	MAA/GM

STD. NO. PCG11 (SHT 4)