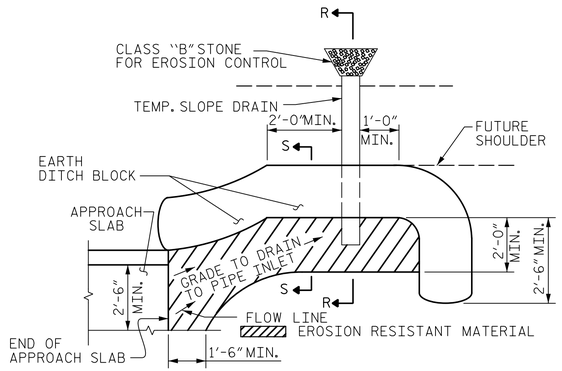

NOTE: IMMEDIATELY AFTER THE CONSTRUCTION OF THE APPROACH SLAB, THE CONTRACTOR SHALL PROVIDE TEMPORARY BERM AND SLOPE DRAIN. CONTRACTOR SHALL GRADE TO PIPE INLET AND PROVIDE EROSION RESISTANT MATERIAL AS SHOWN. THE EROSION RESISTANT MATERIAL SHALL BE EITHER 1) ASPHALT PLANT MIX, TYPE 1 OR TYPE 2, MIN. 2" DEPTH, 2) EROSION CONTROL MAT, OR 3) CONCRETE, AS DIRECTED BY THE ENGINEER. THE SLOPE DRAIN SHALL CONSIST OF A NON-PERFORATED TEMPORARY DRAINAGE PIPE, 12 INCHES IN DIAMETER.

PLAN VIEW

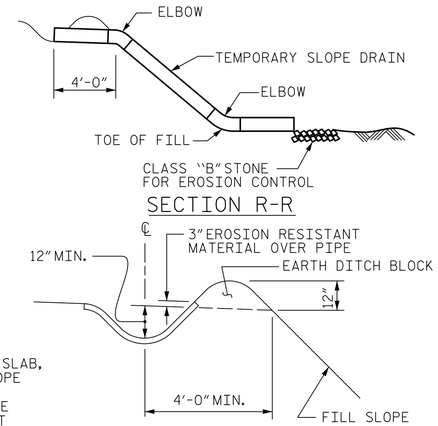

SECTION S-S

TEMPORARY BERM AND SLOPE DRAIN DETAILS

(TO BE USED WHEN SHOULDER BERM GUTTER IS REQUIRED)

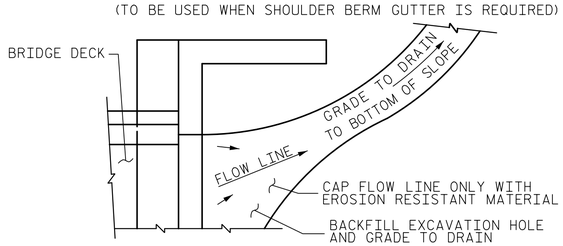

NOTE: IF THE APPROACH SLAB IS NOT CONSTRUCTED IMMEDIATELY AFTER THE BACKFILLING OF THE END BENT EXCAVATION, GRADE TO DRAIN TO THE BOTTOM OF THE SLOPE AND PROVIDE EROSION RESISTANT MATERIAL, SUCH AS FIBERGLASS ROVING OR AS DIRECTED BY THE ENGINEER TO PREVENT SOIL EROSION AND TO PROTECT THE AREA ADJACENT TO THE STRUCTURE. THE CONTRACTOR WILL BE REQUIRED TO REMOVE THESE MATERIALS PRIOR TO CONSTRUCTION OF THE APPROACH SLAB.

TEMPORARY DRAINAGE DETAIL

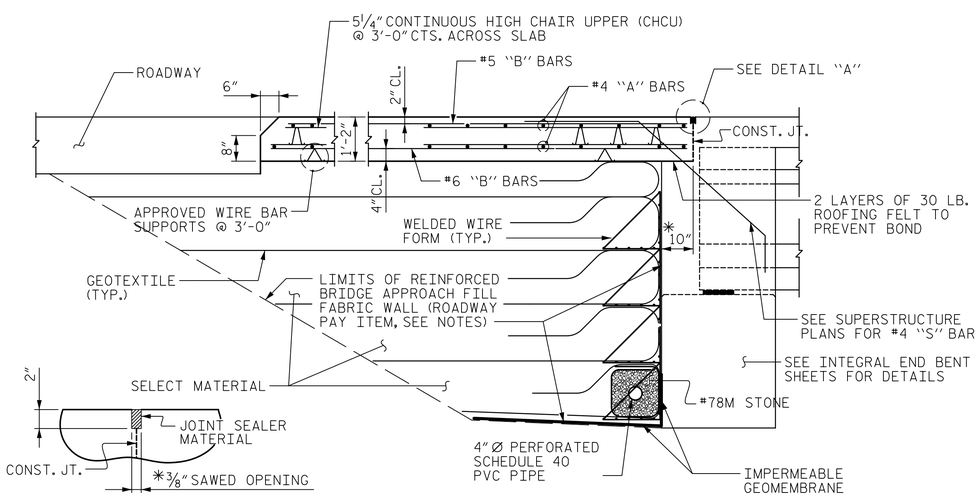

DETAIL "A"

SECTION THRU SLAB

* NORMAL TO END BENT

DRAWN BY : EML DATE : 7/14/14
CHECKED BY : SKD DATE : 7/16/14

BILL OF MATERIAL

APPROACH SLAB AT INTEGRAL END BENT 1

BAR	NO.	SIZE	TYPE	LENGTH	WEIGHT
* A1	93	4	STR	21'-8"	1346
* A2	1	4	STR	20'-6"	14
* A3	1	4	STR	17'-10"	12
* A4	1	4	STR	15'-2"	10
* A5	1	4	STR	12'-6"	8
* A6	1	4	STR	9'-10"	7
* A7	1	4	STR	7'-2"	5
* A8	1	4	STR	24'-1"	16
* A9	1	4	STR	21'-5"	14
* A10	1	4	STR	18'-9"	13
* A11	1	4	STR	16'-1"	11
* A12	1	4	STR	13'-5"	9
* A13	1	4	STR	10'-9"	7
* A14	1	4	STR	27'-8"	18
* A15	1	4	STR	25'-0"	17
* A16	1	4	STR	22'-4"	15
* A17	1	4	STR	19'-8"	13
* A18	1	4	STR	17'-0"	11
* A19	1	4	STR	14'-4"	10
* A20	1	4	STR	11'-8"	8
* A21	1	4	STR	9'-0"	6
* A22	1	4	STR	6'-4"	4
* A23	1	4	STR	3'-8"	2
A24	1	4	STR	21'-6"	1336
A25	1	4	STR	20'-2"	13
A26	1	4	STR	17'-6"	12
A27	1	4	STR	14'-10"	10
A28	1	4	STR	12'-2"	8
A29	1	4	STR	9'-6"	6
A30	1	4	STR	6'-10"	5
A31	1	4	STR	23'-11"	16
A32	1	4	STR	21'-3"	14
A33	1	4	STR	18'-7"	12
A34	1	4	STR	15'-11"	11
A35	1	4	STR	13'-3"	9
A36	1	4	STR	10'-7"	7
A37	1	4	STR	27'-8"	18
A38	1	4	STR	25'-0"	17
A39	1	4	STR	22'-4"	15
A40	1	4	STR	19'-8"	13
A41	1	4	STR	17'-0"	11
A42	1	4	STR	14'-4"	10
A43	1	4	STR	11'-8"	8
A44	1	4	STR	9'-0"	6
A45	1	4	STR	6'-4"	4
A46	1	4	STR	3'-8"	2
* A47	2	4	STR	7'-0"	9
A48	2	4	STR	7'-0"	9
* B1	105	5	STR	24'-0"	2628
* B2	1	5	STR	24'-2"	25
* B3	1	5	STR	24'-5"	25
* B4	1	5	STR	24'-7"	26
* B5	1	5	STR	24'-9"	26

BAR	NO.	SIZE	TYPE	LENGTH	WEIGHT
* B6	1	5	STR	25'-0"	26
* B7	1	5	STR	25'-2"	26
* B8	1	5	STR	25'-4"	26
* B9	1	5	STR	25'-6"	27
* B10	1	5	STR	25'-9"	27
* B11	1	5	STR	25'-11"	27
* B12	1	5	STR	26'-1"	27
* B13	1	5	STR	26'-3"	27
* B14	1	5	STR	26'-6"	28
* B15	1	5	STR	26'-8"	28
* B16	1	5	STR	26'-10"	28
* B17	1	5	STR	27'-0"	28
* B18	1	5	STR	27'-3"	28
* B19	1	5	STR	27'-5"	29
* B20	17	5	STR	9'-2"	163
* B21	17	5	STR	12'-4"	219
* B22	17	5	STR	15'-6"	275
* B23	17	5	STR	18'-9"	332
* B24	17	5	STR	21'-11"	389
* B25	19	5	STR	25'-5"	504
B26	105	6	STR	24'-6"	3864
B27	1	6	STR	24'-9"	37
B28	1	6	STR	24'-11"	37
B29	1	6	STR	25'-1"	38
B30	1	6	STR	25'-3"	38
B31	1	6	STR	25'-6"	38
B32	1	6	STR	25'-8"	39
B33	1	6	STR	25'-10"	39
B34	1	6	STR	26'-0"	39
B35	1	6	STR	26'-3"	39
B36	1	6	STR	26'-5"	40
B37	1	6	STR	26'-7"	40
B38	1	6	STR	26'-9"	40
B39	1	6	STR	27'-0"	41
B40	1	6	STR	27'-2"	41
B41	1	6	STR	27'-4"	41
B42	1	6	STR	27'-6"	41
B43	1	6	STR	27'-9"	42
B44	1	6	STR	27'-11"	42
B45	17	6	STR	9'-2"	234
B46	17	6	STR	12'-4"	315
B47	17	6	STR	15'-6"	396
B48	17	6	STR	18'-9"	479
B49	17	6	STR	21'-11"	560
B50	19	6	STR	25'-5"	725

REINFORCING STEEL 8856 LBS.

* EPOXY COATED REINFORCING STEEL 6579 LBS.

CLASS AA CONCRETE 97.1 C. Y.

APPROACH SLAB AT INTEGRAL END BENT 2

BAR	NO.	SIZE	TYPE	LENGTH	WEIGHT
* A1	92	4	STR	21'-8"	1346
A24	92	4	STR	21'-6"	1321
* A47	2	4	STR	7'-0"	9
A48	2	4	STR	7'-0"	9
* A49	1	4	STR	5'-3"	4
* A50	1	4	STR	8'-1"	5
* A51	1	4	STR	11'-0"	7
* A52	1	4	STR	13'-10"	9
* A53	1	4	STR	16'-8"	11
* A54	1	4	STR	19'-6"	13
* A55	1	4	STR	22'-5"	15
* A56	1	4	STR	25'-3"	17
* A57	1	4	STR	28'-1"	19
* A58	1	4	STR	11'-5"	8
* A59	1	4	STR	14'-3"	10
* A60	1	4	STR	17'-1"	11
* A61	1	4	STR	20'-0"	13
* A62	1	4	STR	22'-10"	15
* A63	1	4	STR	6'-1"	4
* A64	1	4	STR	9'-0"	6
* A65	1	4	STR	11'-10"	8
* A66	1	4	STR	14'-8"	10
* A67	1	4	STR	11'-8"	8
* A68	1	4	STR	20'-5"	14
A69	1	4	STR	5'-3"	4
A70	1	4	STR	8'-1"	5
A71	1	4	STR	11'-0"	7
A72	1	4	STR	13'-10"	9
A73	1	4	STR	16'-8"	11
A74	1	4	STR	19'-6"	13
A75	1	4	STR	22'-5"	15
A76	1	4	STR	25'-3"	17
A77	1	4	STR	28'-1"	19
A78	1	4	STR	11'-3"	8
A79	1	4	STR	14'-1"	9
A80	1	4	STR	16'-11"	11
A81	1	4	STR	19'-10"	13
A82	1	4	STR	22'-8"	15
A83	1	4	STR	5'-9"	4
A84	1	4	STR	8'-8"	6
A85	1	4	STR	11'-6"	8
A86	1	4	STR	14'-4"	10
A87	1	4	STR	17'-3"	12
A88	1	4	STR	20'-1"	13
* B1	105	5	STR	24'-0"	2628
* B2	1	5	STR	24'-2"	25
* B3	1	5	STR	24'-5"	25
* B4	1	5	STR	24'-7"	26
* B5	1	5	STR	24'-9"	26
B26	105	6	STR	24'-6"	3864
B27	1	6	STR	24'-9"	37
B28	1	6	STR	24'-11"	37
B29	1	6	STR	25'-1"	38

BAR	NO.	SIZE	TYPE	LENGTH	WEIGHT
B30	1	6	STR	25'-3"	38
* B51	1	5	STR	24'-11"	26
* B52	1	5	STR	25'-1"	26
* B53	1	5	STR	25'-3"	26
* B54	1	5	STR	25'-5"	27
* B55	1	5	STR	25'-7"	27
* B56	1	5	STR	25'-9"	27
* B57	1	5	STR	26'-11"	28
* B58	1	5	STR	26'-1"	27
* B59	1	5	STR	26'-4"	27
* B60	1	5	STR	26'-6"	28
* B61	1	5	STR	26'-8"	28
* B62	1	5	STR	26'-10"	28
* B63	1	5	STR	27'-0"	28
* B64	1	5	STR	27'-2"	28
* B65	17	5	STR	8'-9"	155
* B66	17	5	STR	11'-8"	207
* B67	17	5	STR	14'-8"	260
* B68	17	5	STR	17'-7"	312
* B69	17	5	STR	20'-7"	365
* B70	17	5	STR	23'-11"	474
B71	1	6	STR	25'-5"	38
B72	1	6	STR	25'-7"	38
B73	1	6	STR	25'-9"	39
B74	1	6	STR	25'-11"	39
B75	1	6	STR	26'-1"	40
B76	1	6	STR	26'-3"	39
B77	1	6	STR	26'-5"	40
B78	1	6	STR	26'-7"	40
B79	1	6	STR	26'-10"	40
B80	1	6	STR	27'-0"	41
B81	1	6	STR	27'-2"	41
B82	1	6	STR	27'-4"	41
B83	1	6	STR	27'-6"	41
B84	1	6	STR	27'-8"	42
B85	17	6	STR	8'-9"	223
B86	17	6	STR	11'-8"	298
B87	17	6	STR	14'-8"	375
B88	17	6	STR	17'-7"	449
B89	17	6	STR	20'-7"	526
B90	19	6	STR	23'-11"	683

REINFORCING STEEL 8664 LBS.

* EPOXY COATED REINFORCING STEEL 6426 LBS.

CLASS AA CONCRETE 95.0 C. Y.

NOTES

APPROACH SLAB SHALL NOT BE CONSTRUCTED PRIOR TO COMPLETION OF THE BRIDGE DECK.

FOR REINFORCED BRIDGE APPROACH FILL FABRIC WALL INCLUDING GEOTEXTILE, IMPERMEABLE GEOMEMBRANE, 4" Ø DRAINAGE PIPE, #78M STONE, WELDED WIRE FORM, AND SELECT MATERIAL, SEE ROADWAY PLANS.

AREA BETWEEN THE WINGWALL AND APPROACH SLAB SHALL BE GRADED TO DRAIN THE WATER AWAY FROM THE FILL FACE OF THE BRIDGE AND SHALL BE PAVED. SEE ROADWAY PLANS.

THE JOINT OPENING AT THE APPROACH SLAB/DECK INTERFACE SHALL BE SAWED NO MORE THAN 12 HOURS AFTER THE APPROACH SLAB IS CAST. THE JOINT SHALL BE CLEANED OF ALL DEBRIS BEFORE THE SEALANT IS APPLIED. THE JOINT SEALER MATERIAL SHALL CONFORM TO THE REQUIREMENTS OF SECTION 1028-3 OF THE STANDARD SPECIFICATIONS.

PROJECT NO. U-2579B
FORSYTH COUNTY
STATION: 628+65.50 -L-

SHEET 2 OF 2

STATE OF NORTH CAROLINA
DEPARTMENT OF TRANSPORTATION
RALEIGH

SUBSTRUCTURE

BRIDGE APPROACH SLAB DETAILS

LEFT LANE

DocuSigned by: Steven K. Doerner
A22D3DBEFA1D43F...
8/6/2014

NORTH CAROLINA PROFESSIONAL SEAL 16572 ENGINEER STEVEN K. DOERNER

Prepared by:
JACOBS
JACOBS ENGINEERING GROUP
111 CORNING ROAD, SUITE 200
CARY, NORTH CAROLINA 27518
TEL: (919) 859-5000

DWG. NO. 44 OF 44

REVISIONS						SHEET NO.
NO.	BY:	DATE:	NO.	BY:	DATE:	S-353
1			3			TOTAL SHEETS
2			4			707