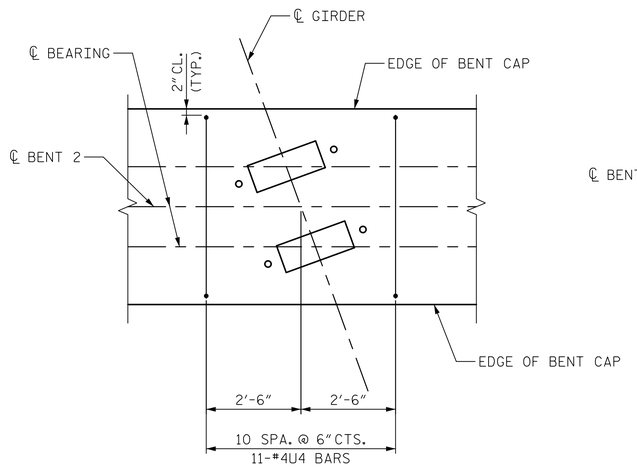

DETAIL "A"

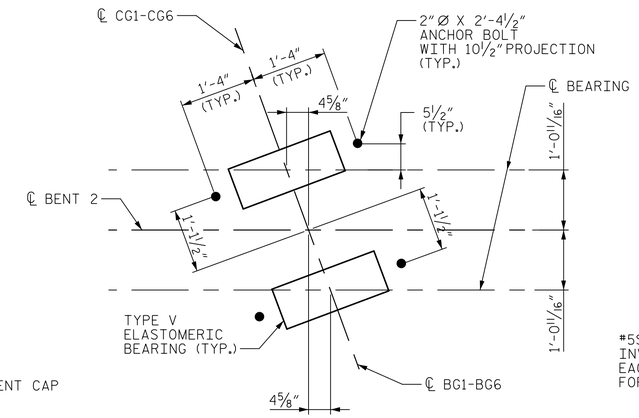

ANCHOR BOLT LAYOUT DETAIL

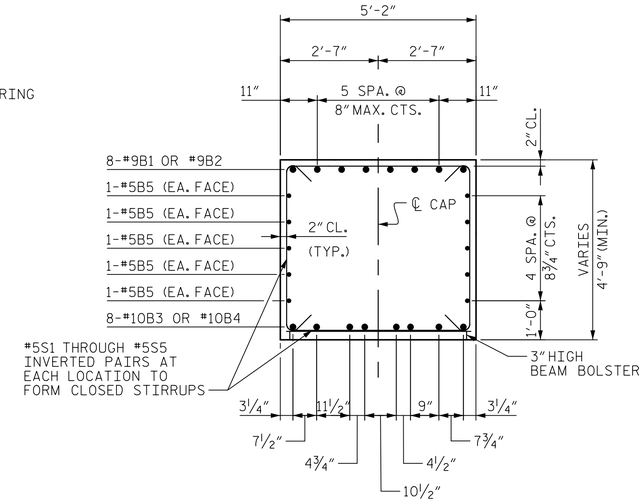

SECTION A-A

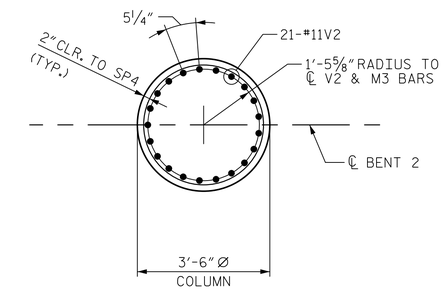

SECTION B-B

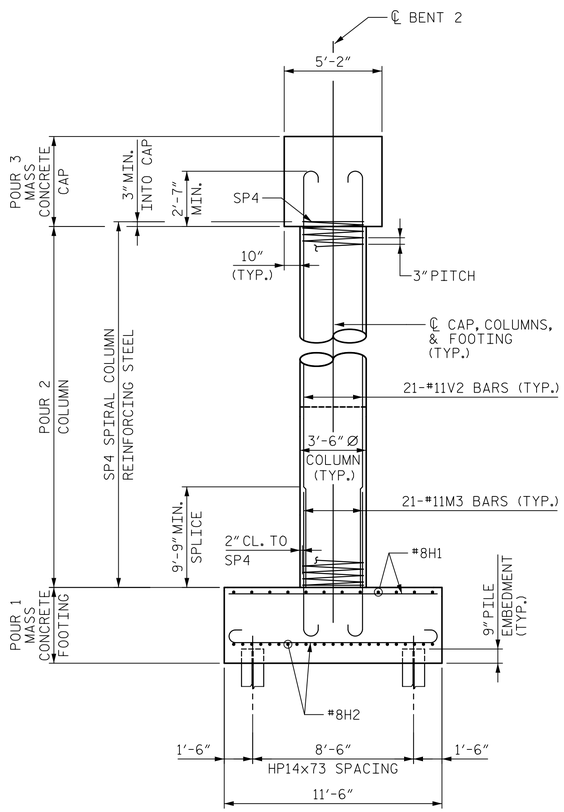

END ELEVATION

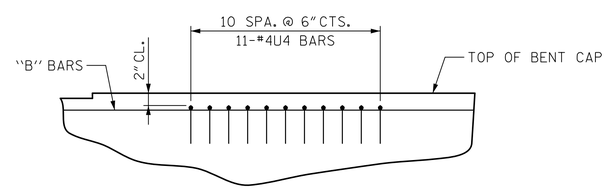

BEARING AREA
REINFORCEMENT DETAIL

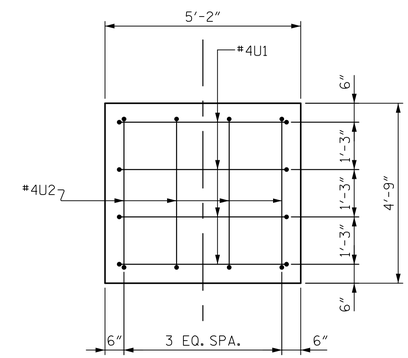

VIEW C-C

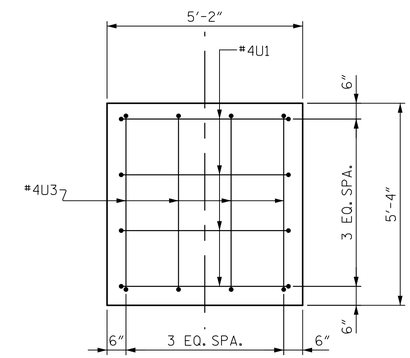

VIEW D-D

PROJECT NO. U-2579B

FORSYTH COUNTY

STATION: 628+65.50 -L-

SHEET 2 OF 3

DocuSigned by: Steven K Doerrer A22D3DBEFA1D43F...

8/6/2014

NORTH CAROLINA PROFESSIONAL SEAL 16572 ENGINEER STEVEN K. DOERRER

Prepared by:

JACOBS

JACOBS ENGINEERING GROUP
111 CORNING ROAD, SUITE 200
CARY, NORTH CAROLINA 27518
TEL: (919) 859-5000

DWG. NO. 35 OF 44

STATE OF NORTH CAROLINA
DEPARTMENT OF TRANSPORTATION
RALEIGH

SUBSTRUCTURE

BENT 2 DETAILS

LEFT LANE

REVISIONS						SHEET NO.
NO.	BY:	DATE:	NO.	BY:	DATE:	S-344
1			3			TOTAL SHEETS
2			4			707

DRAWN BY : HLS DATE : 7/28/14

CHECKED BY : OKH DATE : 7/28/14

$$$$$SYSTIME$$$$$
$$$$$$$$$$$$$$$$$$$$DGN$$$$$$$$$$$$$$$$$$$$
$$$$USERNAME$$$$