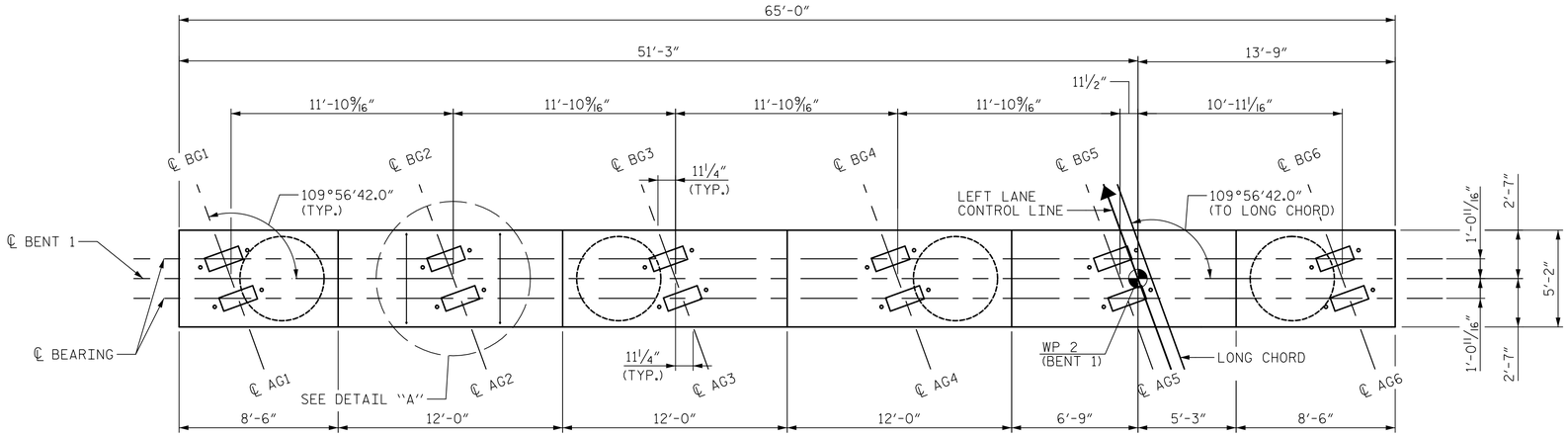

PLAN

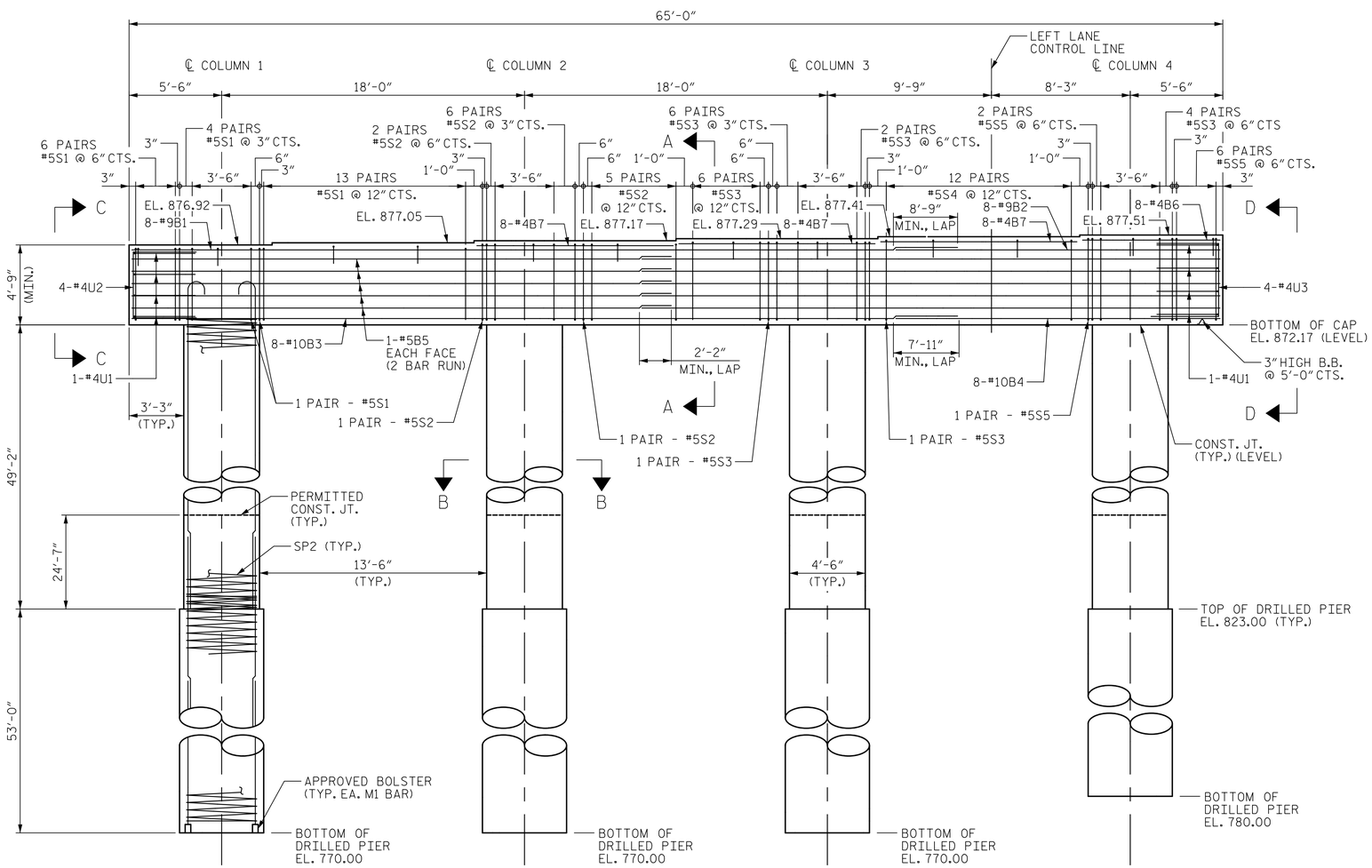

ELEVATION

NOTES:

1. FOR SECTIONS A-A, B-B, AND VIEWS C-C, D-D SEE SUBSTRUCTURE - "BENT 1 DETAILS" SHEET.
2. FOR DETAIL "A" & DRILLED PIER CONSTRUCTION JOINT DETAIL, SEE SUBSTRUCTURE - "BENT 1 DETAILS" SHEET.
3. FOR BAR LISTS & QUANTITIES, SEE SUBSTRUCTURE - "BENT 1 DRILLED PIER DETAILS AND BILL OF MATERIALS" SHEET.
4. STIRRUPS IN THE CAP MAY BE SHIFTED AS NECESSARY TO CLEAR ANCHOR BOLTS.
5. HOOKS ON "V" BARS MAY BE TURNED AS NECESSARY TO CLEAR REINFORCING STEEL IN CAP.
6. THE CONTRACTOR'S ATTENTION IS CALLED TO THE FACT THAT THE LONGITUDINAL REINFORCEMENT FOR THE DRILLED PIERS IS DETAILED WITH THREE (3) FEET OF EXTRA LENGTH.
7. THE LOCATION OF THE CONSTRUCTION JOINT IN THE DRILLED PIERS IS BASED ON AN APPROXIMATE GROUND LINE ELEVATION. IF THE CONSTRUCTION JOINT IS ABOVE THE ACTUAL GROUND LINE, THE CONTRACTOR SHALL PLACE THE CONSTRUCTION JOINT ONE (1) FOOT BELOW THE GROUND LINE.
8. BENT CAP CONCRETE SHALL BE CONSIDERED MASS CONCRETE, SEE SPECIAL PROVISIONS.

PROJECT NO. U-2579B
FORSYTH COUNTY
STATION: 628+65.50 -L-

SHEET 1 OF 3

DocuSigned by: Steven K Doerer A22D3DBEFA1D43F...
8/6/2014

NORTH CAROLINA PROFESSIONAL SEAL 16572 ENGINEER STEVEN K. DOERER

STATE OF NORTH CAROLINA
DEPARTMENT OF TRANSPORTATION
RALEIGH

SUBSTRUCTURE

BENT 1

LEFT LANE

Prepared by:
JACOBS
JACOBS ENGINEERING GROUP
111 CORNING ROAD, SUITE 200
CARY, NORTH CAROLINA 27518
TEL: (919) 859-5000

DWG. NO. 31 OF 44

REVISIONS						SHEET NO.
NO.	BY:	DATE:	NO.	BY:	DATE:	S-340
1			3			TOTAL SHEETS
2			4			707

DRAWN BY : HLS DATE : 7/24/14
CHECKED BY : OKH DATE : 7/28/14