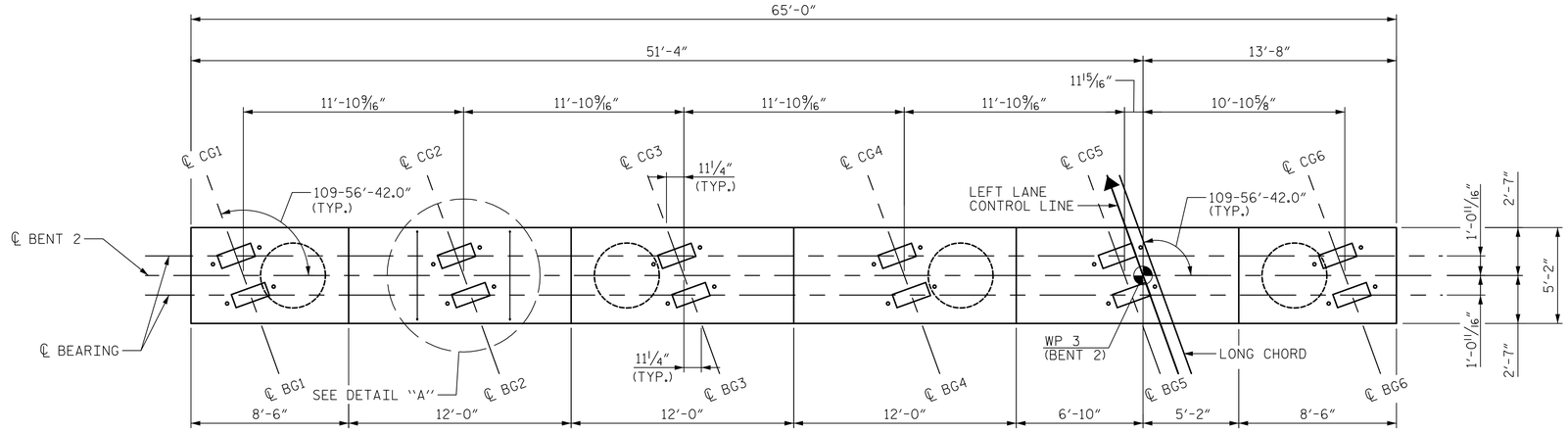

PLAN

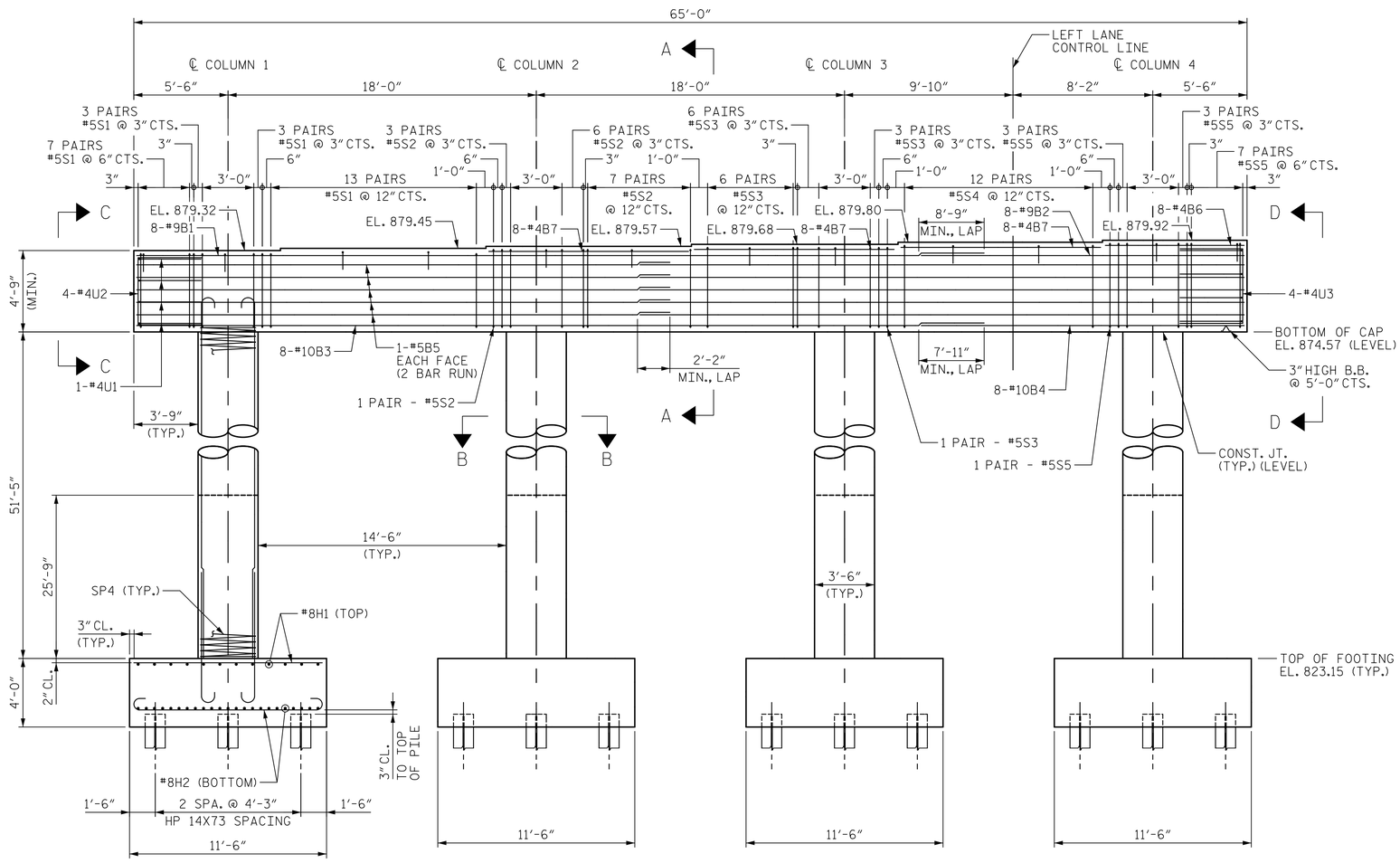

ELEVATION

NOTES:

1. FOR SECTIONS A-A, B-B, AND VIEWS C-C, D-D SEE SUBSTRUCTURE - "BENT 2 DETAILS" SHEET.
2. FOR DETAIL "A" & END ELEVATION, SEE SUBSTRUCTURE - "BENT 2 DETAILS" SHEET.
3. FOR BAR LISTS & QUANTITIES, SEE SUBSTRUCTURE - "BENT 2 FOOTING PLAN AND BILL OF MATERIALS" SHEET.
4. STIRRUPS IN THE CAP MAY BE SHIFTED AS NECESSARY TO CLEAR ANCHOR BOLTS.
5. HOOKS ON "V" BARS MAY BE TURNED AS NECESSARY TO CLEAR REINFORCING STEEL IN CAP.
6. BENT CAP AND FOOTING CONCRETE SHALL BE CONSIDERED MASS CONCRETE, SEE SPECIAL PROVISIONS.

PROJECT NO. U-2579B
FORSYTH COUNTY
STATION: 628+65.50 -L-

SHEET 1 OF 3

DocuSigned by: Steven K Doerner
A22D3DBEFA1D43F...
8/6/2014

NORTH CAROLINA PROFESSIONAL SEAL 16572 ENGINEER STEVEN K. DOERNER

Prepared by:
JACOBS
JACOBS ENGINEERING GROUP
111 CORNING ROAD, SUITE 200
CARY, NORTH CAROLINA 27518
TEL: (919) 859-5000

DWG. NO. 34 OF 44

STATE OF NORTH CAROLINA
DEPARTMENT OF TRANSPORTATION
RALEIGH

SUPERSTRUCTURE

BENT 2

LEFT LANE

REVISIONS						SHEET NO.
NO.	BY:	DATE:	NO.	BY:	DATE:	S-343
1			3			TOTAL SHEETS
2			4			707

DRAWN BY : HLS DATE : 7/28/14
CHECKED BY : OKH DATE : 7/28/14

SYSTIME DGN USERNAME