F. A. PROJ. NO.
NHF-0918(93)

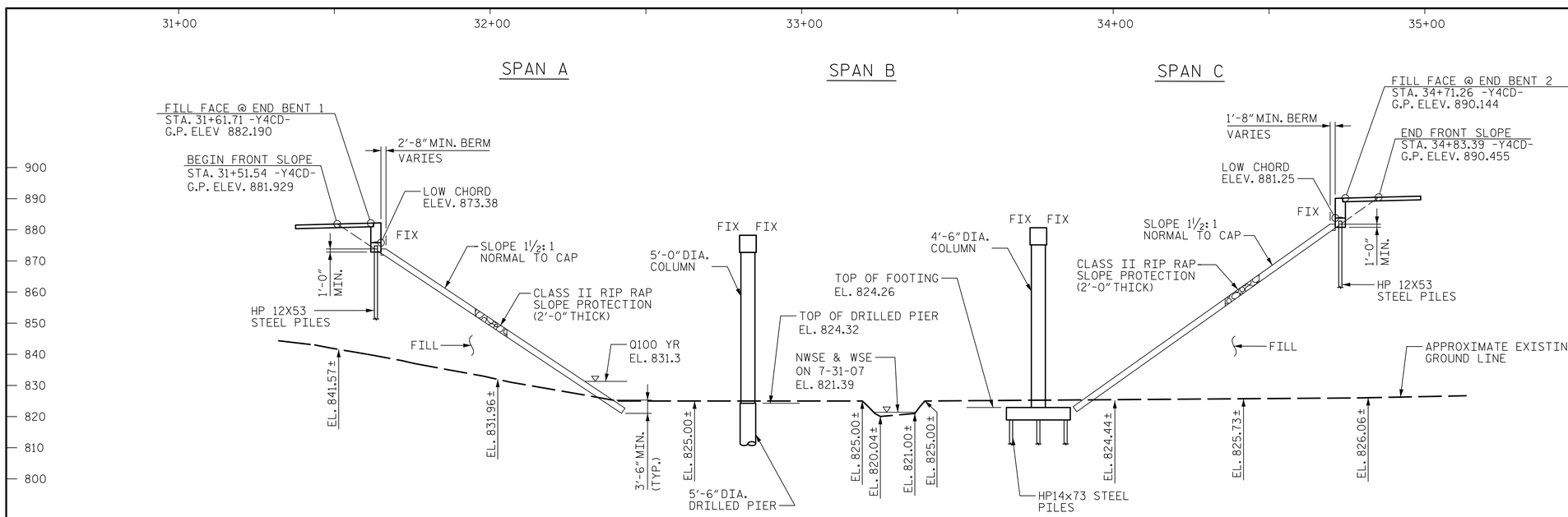

SECTION ALONG CENTERLINE -Y4CD-

SECTIONS @ BENTS AND END BENTS ARE @ RIGHT ANGLES

NOTE:

1. SEE GENERAL DRAWING SHEET 4 OF 4 FOR GENERAL NOTES.

+2.5694%

GRADE DATA

PVI1 STA. = 23+24.15
ELEV. = 860.67
L1 = 1120.00'
PVI2 STA. = 52+93.00
ELEV. = 936.95
L2 = 1620.00'

HORIZONTAL CURVE DATA -Y4CD-

PI STA 26+76.17
△ = 8°27'12"(RT)
L = 1918.03'
R = 13000.00'

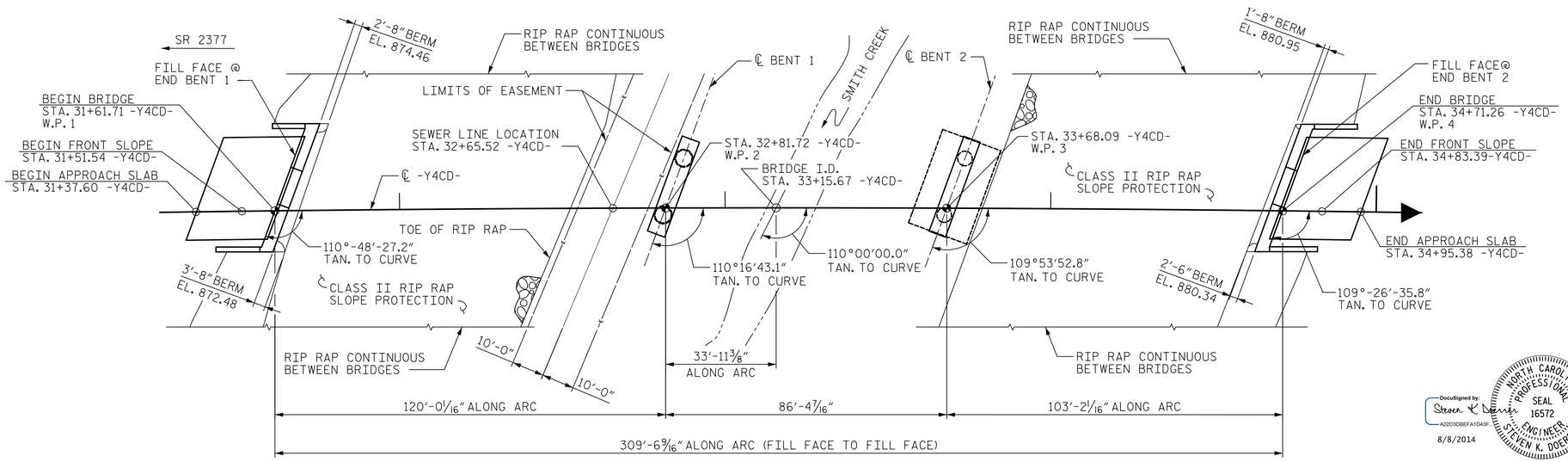

PLAN

PILES NOT SHOWN IN PLAN VIEW
FOR CLARITY

I HEREBY CERTIFY THESE PLANS
ARE THE AS-BUILT PLANS

PROJECT NO. U-2579B
FORSYTH COUNTY
STATION: 33+15.67 -Y4CD-

BRIDGE NO. 673 SHEET 1 OF 4

DocuSigned by: Steven K. Doerrer
A2203DBEFA1D43F...
8/8/2014

NORTH CAROLINA PROFESSIONAL SEAL 16572 ENGINEER STEVEN K. DOERRER

Prepared by:
JACOBS
JACOBS ENGINEERING GROUP
111 CORNING ROAD, SUITE 200
CARY, NORTH CAROLINA 27518
TEL: (919) 859-5000

DWG. NO. 1 OF 43

STATE OF NORTH CAROLINA
DEPARTMENT OF TRANSPORTATION
RALEIGH

GENERAL DRAWING
FOR BRIDGE ON -Y4CD-
OVER SMITH CREEK
BETWEEN US-158 AND
US-421/I-40 BUS.
PLAN AND ELEVATION

REVISIONS						SHEET NO.
NO.	BY:	DATE:	NO.	BY:	DATE:	S-267
1			3			TOTAL SHEETS
2			4			707

DRAWN BY :	EML	DATE :	6/5/14
CHECKED BY :	OKH	DATE :	6/6/14

$$$$$$SYSTIME$$$$$
$$$$$$$$$$$$$$$$$$$$DGN$$$$$$$$$$$$$$$$$$$$
$$$$USERNAME$$$$