PLAN - SPAN A

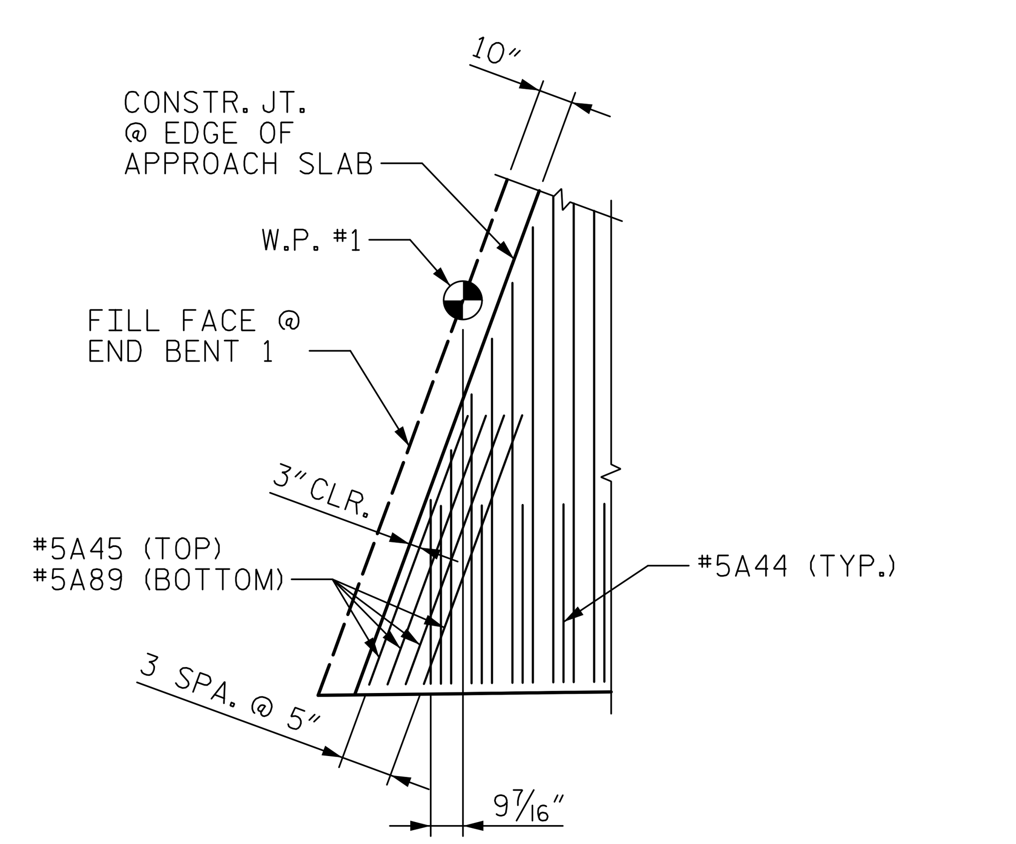

DETAIL "A"

NOTES:

1. FOR TOP AND BOTTOM OF SLAB "B" BAR LAYOUT, SEE SUPERSTRUCTURE - "'B' BAR LAYOUT".
2. FOR LOCATION OF INTERMEDIATE DIAPHRAGMS, SEE SUPERSTRUCTURE - "GIRDER LAYOUT".
3. FOR SECTIONS A-A AND B-B, SEE SUPERSTRUCTURE - "SECTIONS & DETAILS".
4. SEE "CONCRETE BARRIER RAIL" SHEET FOR ADDITIONAL REINFORCING STEEL IN SLAB & BARRIER RAIL.
5. FOR POUR SEQUENCE AND TRANSVERSE CONSTRUCTION JOINT LOCATIONS, SEE ""B" BAR LAYOUT" SHEET.

DocuSigned by: Steven K Doerrer
A22D3DBEFA1D43F...
8/6/2014

NORTH CAROLINA PROFESSIONAL SEAL 16572 ENGINEER STEVEN K. DOERRER

PROJECT NO. U-2579B
FORSYTH COUNTY
STATION: 33+15.67 -Y4CD-

STATE OF NORTH CAROLINA
DEPARTMENT OF TRANSPORTATION
RALEIGH

SUPERSTRUCTURE

PLAN OF SPAN A

Prepared by:
JACOBS
JACOBS ENGINEERING GROUP
111 CORNING ROAD, SUITE 200
CARY, NORTH CAROLINA 27518
TEL: (919) 859-5000

DWG. NO. 9 OF 43

REVISIONS					
NO.	BY:	DATE:	NO.	BY:	DATE:
1			3		
2			4		

SHEET NO. S-275
TOTAL SHEETS 707

DRAWN BY : EML DATE : 5/1/14
CHECKED BY : JBT DATE : 5/15/14

$$$$$$SYSTIME$$$$$
$$$$$$$$$$$$$$$$$$$$$$$$DGN$$$$$$$$$$$$$$$$$$$$$$$$$
$$$$USERNAME$$$$