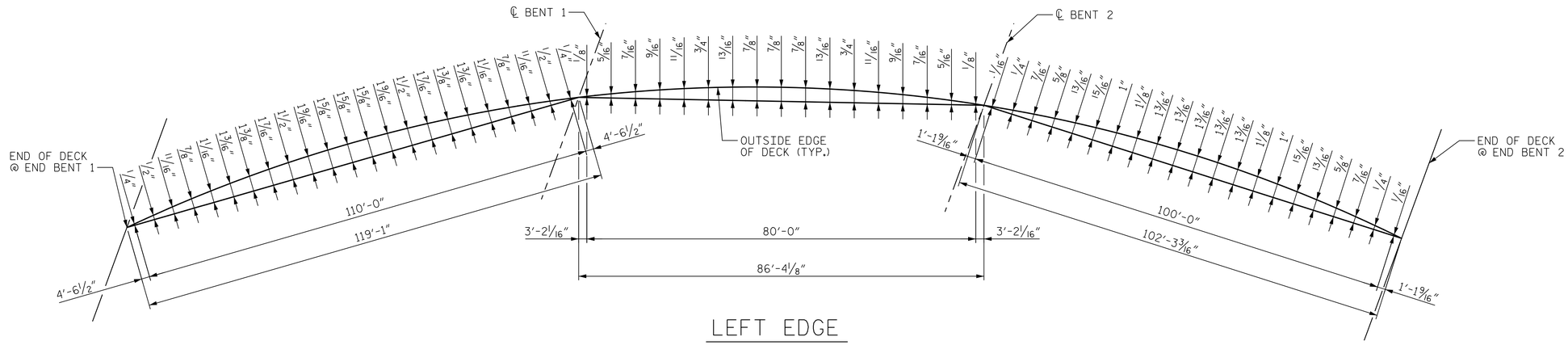

LEFT EDGE

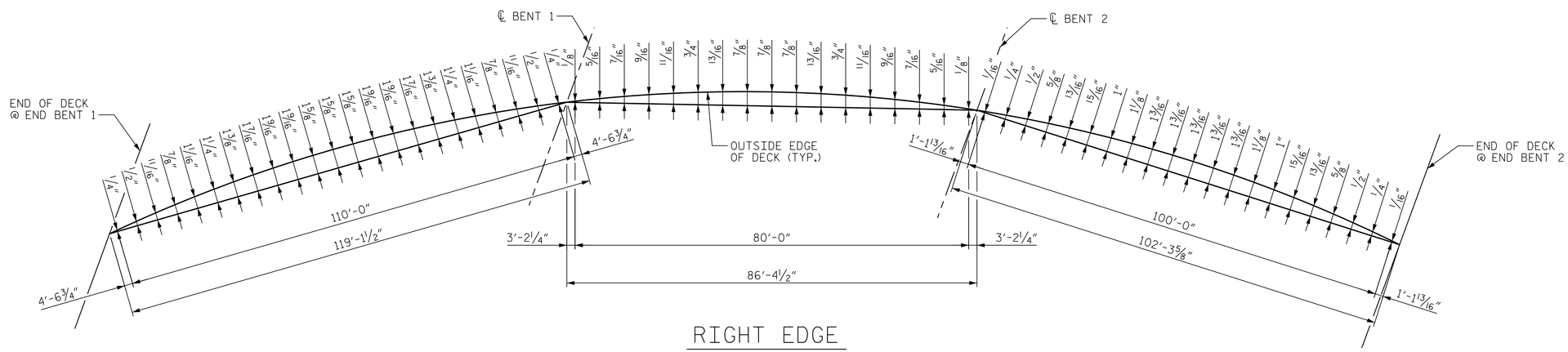

RIGHT EDGE

PROJECT NO. U-2579B

FORSYTH COUNTY

STATION: 33+15.67 -Y4CD-

DocuSigned by: Steven K Doerrer A22D3DBEFA1D43F... 8/6/2014

NORTH CAROLINA PROFESSIONAL SEAL 16572 ENGINEER STEVEN K. DOERRER

Prepared by:

JACOBS

JACOBS ENGINEERING GROUP
111 CORNING ROAD, SUITE 200
CARY, NORTH CAROLINA 27518
TEL: (919) 859-5000

DWG. NO. 14 OF 43

STATE OF NORTH CAROLINA
DEPARTMENT OF TRANSPORTATION
RALEIGH

SUPERSTRUCTURE

HORIZONTAL CURVE OFFSET

REVISIONS						SHEET NO.
NO.	BY:	DATE:	NO.	BY:	DATE:	S-280
1			3			TOTAL SHEETS
2			4			707

DRAWN BY : EML DATE : 5/1/14
CHECKED BY : JBT DATE : 5/22/14

$$$$$$SYSTIME$$$$$
$$$$$$$$$$$$$$$$$$$$DGN$$$$$$$$$$$$$$$$$$$$
$$$$USERNAME$$$$