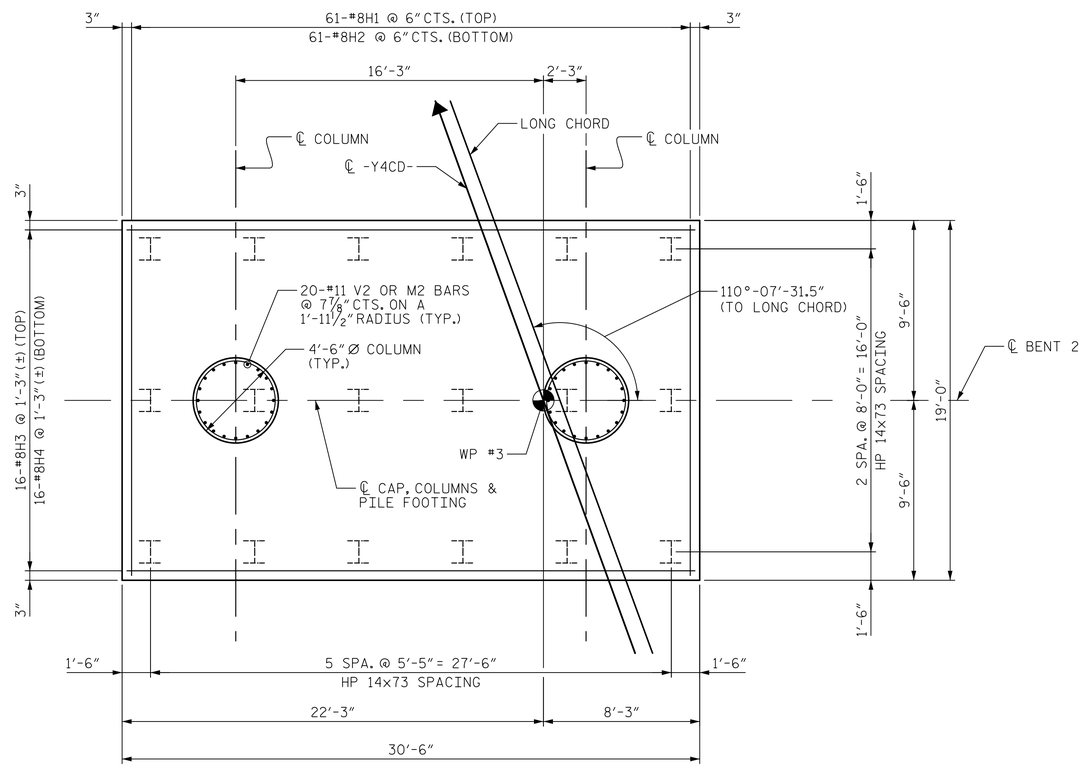

FOOTING PLAN

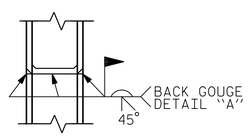

✱✱ PILE VERTICAL

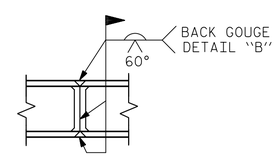

✱✱ PILE HORIZONTAL OR VERTICAL

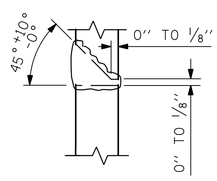

DETAIL "A"

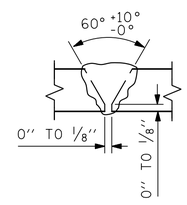

DETAIL "B"

PILE SPLICE DETAILS

✱✱ POSITION OF PILE DURING WELDING

BAR TYPES

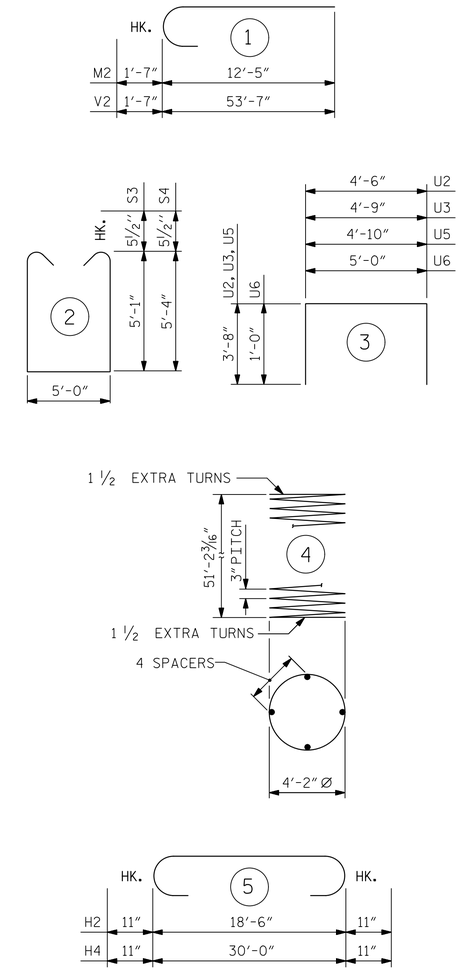

ALL BAR DIMENSIONS ARE OUT TO OUT.

REINFORCING BAR SCHEDULE

BAR	NO.	SIZE	TYPE	LENGTH	WEIGHT (LBS)
B1	16	#9	STR	30'-8"	1668
B2	10	#5	STR	30'-8"	320
B3	9	#4	STR	10'-0"	60
M2	40	#11	1	14'-0"	2975
S3	58	#5	2	16'-2"	978
S4	30	#5	2	16'-8"	522
U2	4	#4	3	11'-10"	32
U3	4	#4	3	12'-1"	32
U5	9	#4	3	12'-2"	73
U6	33	#4	3	7'-0"	154
V2	40	#11	1	55'-2"	11724
H1	61	#8	STR	18'-6"	3013
H2	61	#8	5	20'-4"	3312
H3	16	#8	STR	30'-0"	1282
H4	16	#8	5	31'-10"	1360
REINFORCING STEEL				LBS.	27505
SP-3	2	✱	3	2692'-7"	3597
SPIRAL COLUMN REINFORCING STEEL				LBS.	3597
CLASS "A" CONCRETE BREAKDOWN					
POUR #1 FOOTINGS				CY.	85.9
POUR #2 COLUMNS				CY.	60.0
POUR #3 CAP				CY.	34.5
CLASS "A" CONCRETE				CY.	180.4
FOUNDATION EXCAVATION					LUMP SUM
HP14x73 STEEL PILES				NO.	18
				LIN. FT.	1080

✱ THE SP-3 SPIRAL REINFORCING STEEL SHALL BE W20 OR D-20 COLD DRAWN WIRE OR #4 PLAIN OR DEFORMED BAR,

PROJECT NO. U-2579B

FORSYTH COUNTY

STATION: 33+15.67 -Y4CD-

SHEET 3 OF 3

DocuSigned by: Steven K. Doerrer
A22D3DBEFA1D43F...
8/8/2014

NORTH CAROLINA PROFESSIONAL SEAL 16572 ENGINEER STEVEN K. DOERRER

Prepared by:
JACOBS
JACOBS ENGINEERING GROUP
111 CORNING ROAD, SUITE 200
CARY, NORTH CAROLINA 27518
TEL: (919) 859-5000

DWG. NO. 35 OF 43

STATE OF NORTH CAROLINA
DEPARTMENT OF TRANSPORTATION
RALEIGH

SUBSTRUCTURE

BENT 2
FOOTING PLAN AND
BILL OF MATERIAL

REVISIONS						SHEET NO.
NO.	BY:	DATE:	NO.	BY:	DATE:	S-301
1			3			TOTAL SHEETS
2			4			707

DRAWN BY : EML DATE : 6/12/14
CHECKED BY : OKH DATE : 6/18/14

$$$$$$SYSTIME$$$$$ $$$$$$$$$$$$$$$$$$$$$$DGN$$$$$$$$$$$$$$$$$$$$$$ $$$$USERNAME$$$$