REINFORCING BAR SCHEDULE

BAR	NO.	SIZE	TYPE	LENGTH	WEIGHT (LBS)
✱ A1	591	#5	STR	32'-11"	20290
✱ A2	1	#5	STR	4'-5"	5
✱ A3	1	#5	STR	5'-9"	6
✱ A4	1	#5	STR	7'-2"	7
✱ A5	1	#5	STR	8'-6"	9
✱ A6	1	#5	STR	9'-10"	10
✱ A7	1	#5	STR	11'-3"	12
✱ A8	1	#5	STR	12'-7"	13
✱ A9	1	#5	STR	13'-11"	15
✱ A10	1	#5	STR	15'-3"	16
✱ A11	1	#5	STR	16'-8"	17
✱ A12	1	#5	STR	18'-0"	19
✱ A13	1	#5	STR	19'-4"	20
✱ A14	1	#5	STR	20'-9"	22
✱ A15	1	#5	STR	22'-1"	23
✱ A16	1	#5	STR	23'-5"	24
✱ A17	1	#5	STR	24'-10"	26
✱ A18	1	#5	STR	26'-2"	27
✱ A19	1	#5	STR	27'-6"	29
✱ A20	1	#5	STR	28'-10"	30
✱ A21	1	#5	STR	30'-3"	32
✱ A22	1	#5	STR	31'-7"	33
✱ A23	1	#5	STR	32'-5"	34
✱ A24	1	#5	STR	31'-0"	32
✱ A25	1	#5	STR	29'-8"	31
✱ A26	1	#5	STR	28'-4"	30
✱ A27	1	#5	STR	26'-11"	28
✱ A28	1	#5	STR	25'-7"	27
✱ A29	1	#5	STR	24'-2"	25
✱ A30	1	#5	STR	22'-10"	24
✱ A31	1	#5	STR	21'-5"	22
✱ A32	1	#5	STR	20'-1"	21
✱ A33	1	#5	STR	18'-8"	19
✱ A34	1	#5	STR	17'-4"	18
✱ A35	1	#5	STR	16'-0"	17
✱ A36	1	#5	STR	14'-7"	15
✱ A37	1	#5	STR	13'-3"	14
✱ A38	1	#5	STR	11'-10"	12
✱ A39	1	#5	STR	10'-6"	11
✱ A40	1	#5	STR	9'-1"	9
✱ A41	1	#5	STR	7'-9"	8
✱ A42	1	#5	STR	6'-4"	7
✱ A43	1	#5	STR	5'-0"	5
✱ A44	612	#5	STR	4'-6"	2872
✱ A45	8	#5	STR	7'-0"	58
A46	591	#5	STR	32'-11	20290
A47	1	#5	STR	4'-5"	5
A48	1	#5	STR	5'-9"	6
A49	1	#5	STR	7'-2"	7
A50	1	#5	STR	8'-6"	9
A51	1	#5	STR	9'-10"	10
A52	1	#5	STR	11'-3"	12

BAR	NO.	SIZE	TYPE	LENGTH	WEIGHT (LBS)
A53	1	#5	STR	12'-7"	13
A54	1	#5	STR	13'-11"	15
A55	1	#5	STR	15'-3"	16
A56	1	#5	STR	16'-8"	17
A57	1	#5	STR	18'-0"	19
A58	1	#5	STR	19'-4"	20
A59	1	#5	STR	20'-9"	22
A60	1	#5	STR	22'-1"	23
A61	1	#5	STR	23'-5"	24
A62	1	#5	STR	24'-10"	26
A63	1	#5	STR	26'-2"	27
A64	1	#5	STR	27'-6"	29
A65	1	#5	STR	28'-10"	30
A66	1	#5	STR	30'-3"	32
A67	1	#5	STR	31'-7"	33
A68	1	#5	STR	32'-5"	34
A69	1	#5	STR	31'-0"	32
A70	1	#5	STR	29'-8"	31
A71	1	#5	STR	28'-4"	30
A72	1	#5	STR	26'-11"	28
A73	1	#5	STR	25'-7"	27
A74	1	#5	STR	24'-2"	25
A75	1	#5	STR	22'-10"	24
A76	1	#5	STR	21'-5"	22
A77	1	#5	STR	20'-1"	21
A78	1	#5	STR	18'-8"	19
A79	1	#5	STR	17'-4"	18
A80	1	#5	STR	16'-0"	17
A81	1	#5	STR	14'-7"	15
A82	1	#5	STR	13'-3"	14
A83	1	#5	STR	11'-10"	12
A84	1	#5	STR	10'-6"	11
A85	1	#5	STR	9'-1"	9
A86	1	#5	STR	7'-9"	8
A87	1	#5	STR	6'-4"	7
A88	1	#5	STR	5'-0"	5
A89	16	#5	STR	7'-0"	58
✱ B1	34	#5	STR	34'-3"	1215
✱ B2	136	#5	STR	60'-0"	8511
✱ B3	34	#5	STR	31'-9"	1126
✱ B4	34	#5	STR	17'-6"	621
✱ B5	128	#7	STR	40'-0"	10465
B6	48	#5	STR	33'-3'	1665
B7	192	#5	STR	60'-0"	12015
B8	48	#5	STR	30'-9"	1539
B9	48	#5	STR	16'-8"	834
K1	8	#4	STR	8'-8"	46
K2	32	#4	STR	11'-10"	253
K3	8	#4	STR	10'-2"	54
K4	24	#4	1	7'-9"	124

BAR	NO.	SIZE	TYPE	LENGTH	WEIGHT (LBS)
K5	12	#4	2	15'-3"	122
✱ K6	4	#6	STR	8'-7"	52
✱ K7	16	#6	STR	11'-11"	286
✱ K8	4	#6	STR	10'-1"	61
✱ K9	12	#6	STR	35'-0"	631
✱ K10	2	#6	3	5'-9"	17
✱ K11	8	#6	3	7'-4"	88
✱ K12	2	#6	3	6'-6"	20
✱ K13	2	#6	4	6'-9"	20
✱ K14	8	#6	4	8'-4"	100
✱ K15	2	#6	4	7'-6"	23
S1	8	#4	5	8'-11"	48
S2	212	#4	6	2'-11"	413
✱ S3	52	#4	7	11'-11"	414
✱ S4	52	#4	7	11'-5"	397
U1	36	#4	8	16'-4"	393
✱ U2	52	#4	9	13'-8"	475
✱ U3	24	#4	9	9'-8"	155

✱EPOXY COATED

BAR TYPES

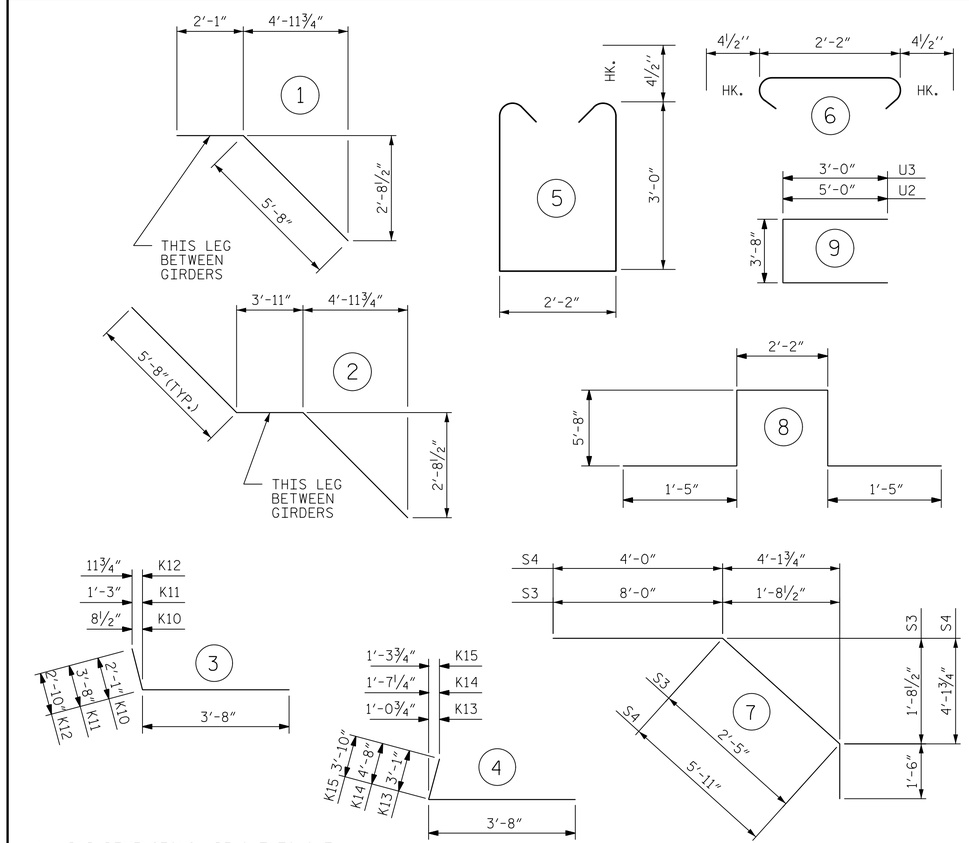

ALL BAR DIMENSIONS ARE OUT TO OUT

GROOVING BRIDGE FLOORS	
APPROACH SLABS	1350 SQ.FT.
BRIDGE DECK	8310 SQ.FT.
TOTAL	9660 SQ.FT.

SUPERSTRUCTURE BILL OF MATERIAL

	CLASS AA CONCRETE	REINFORCING STEEL	EPOXY COATED REINFORCING STEEL
	(CU. YDS.)	(LBS.)	(LBS.)
SPANS "A"-"C"	—	38,660	49,147
POUR 1	79.6	—	—
POUR 2	92.7	—	—
POUR 3	126.5	—	—
POUR 4	99.6	—	—
TOTALS✱✱	398.4	38,660	49,147

✱✱QUANTITIES FOR BARRIER RAIL ARE NOT INCLUDED
✱✱QUANTITIES FOR END BENT DIAPHRAGMS AND BENT DIAPHRAGMS ARE INCLUDED

PROJECT NO. U-2579B
FORSYTH COUNTY
STATION: 33+15.67 -Y4CD-

SUPERSTRUCTURE REINFORCING STEEL LENGTHS ARE BASED ON THE FOLLOWING MINIMUM SPLICE LENGTHS

BAR SIZE	SUPERSTRUCTURE EXCEPT APPROACH SLABS, PARAPET, AND BARRIER RAIL		APPROACH SLABS		PARAPET AND BARRIER RAIL
	EPOXY COATED	UNCOATED	EPOXY COATED	UNCOATED	
#4	2'-0"	1'-9"	2'-0"	1'-9"	2'-9"
#5	2'-6"	2'-2"	2'-6"	2'-2"	3'-5"
#6	3'-0"	2'-7"	3'-10"	2'-7"	4'-4"
#7	5'-3"	3'-6"			
#8	6'-10"	4'-7"			

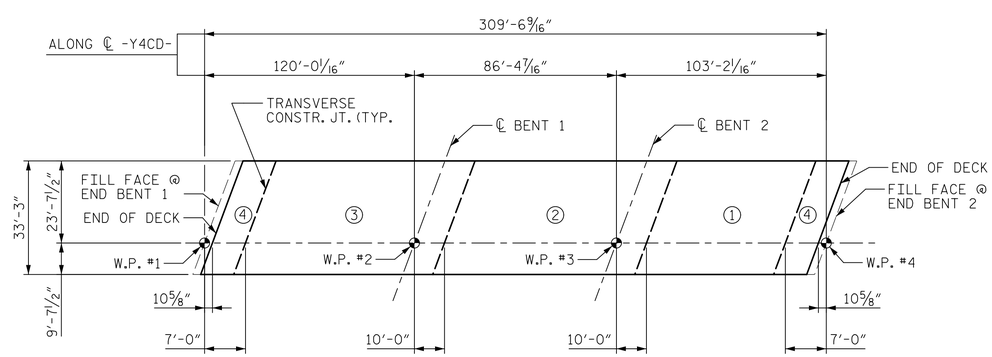

LAYOUT FOR COMPUTING AREA
REINFORCED CONCRETE DECK SLAB
(SQ. FT. = 10234)

DocuSigned by: Steven K Doerrer
A22D3DBEFA1D43F...
8/6/2014

NORTH CAROLINA PROFESSIONAL SEAL 16572 ENGINEER STEVEN K. DOERRER

Prepared by:
JACOBS
JACOBS ENGINEERING GROUP
111 CORNING ROAD, SUITE 200
CARY, NORTH CAROLINA 27518
TEL: (919) 859-5000

DWG. NO. 25 OF 43

STATE OF NORTH CAROLINA
DEPARTMENT OF TRANSPORTATION
RALEIGH

STANDARD
SUPERSTRUCTURE
BILL OF MATERIAL

REVISIONS						SHEET NO.
NO.	BY:	DATE:	NO.	BY:	DATE:	S-291
1			3			TOTAL SHEETS
2			4			707

STD. NO. BOM2

ASSEMBLED BY : EML		DATE : 6/1/14	
CHECKED BY : OKH		DATE : 6/5/14	
DRAWN BY : JMB 5/87	REV. 8/16/99	RWW/LES	
CHECKED BY : SJD 9/87	REV. 5/1/06	TLA/GM	
	REV. 10/1/11	MAA/GM	

$$$$$$SYSTIME$$$$$
$$$$$$$$$$$$$$$$$$$$$$$$$$$$DGN$$$$$$$$$$$$$$$$$$$$$$$$
$$$$USERNAME$$$$