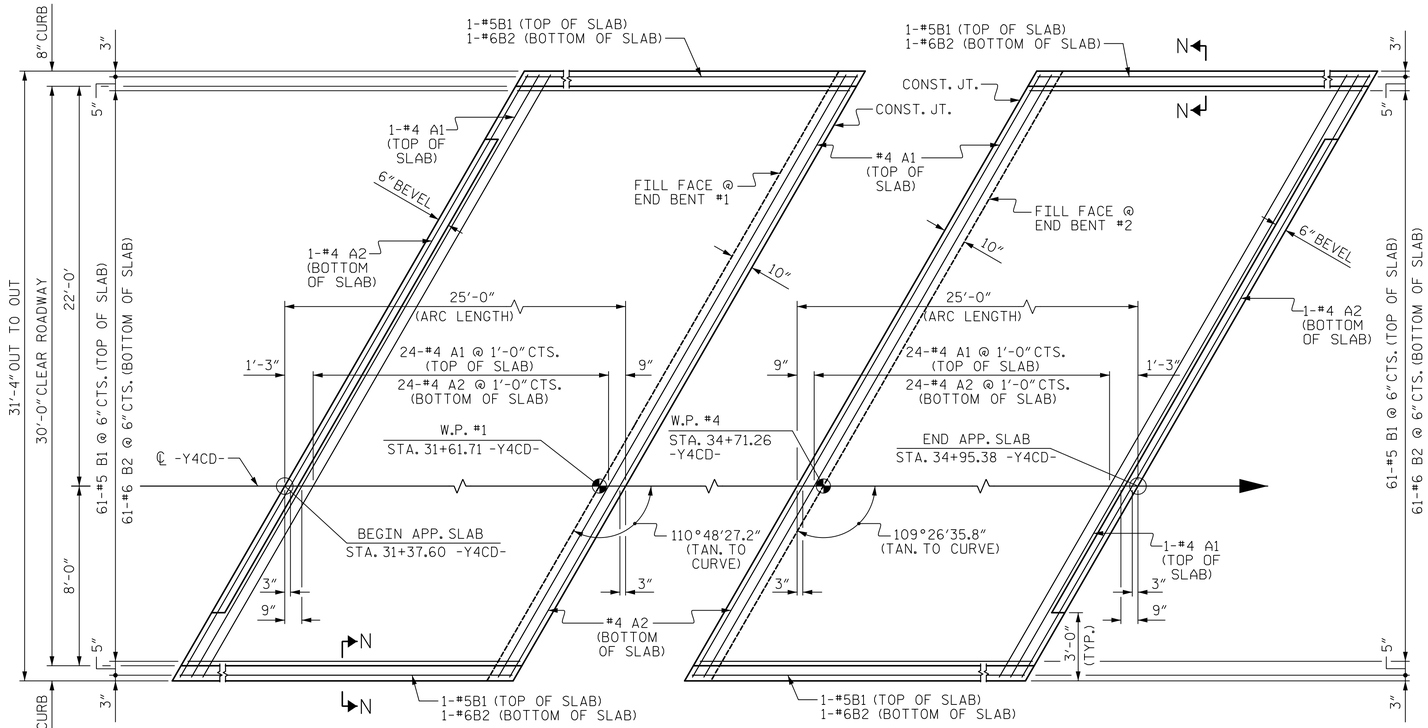

PLAN @ END BENT #1

PLAN @ END BENT #2

DIMENSIONS SHOWN ARE TYPICAL FOR BOTH APPROACH SLABS

NOTES

APPROACH SLAB SHALL NOT BE CONSTRUCTED PRIOR TO COMPLETION OF THE BRIDGE DECK.

FOR REINFORCED BRIDGE APPROACH FILL FABRIC WALL INCLUDING GEOTEXTILE, IMPERMEABLE GEOMEMBRANE, 4" Ø DRAINAGE PIPE, #78M STONE, WELDED WIRE FORM, AND SELECT MATERIAL, SEE ROADWAY PLANS.

AREA BETWEEN THE WINGWALL AND APPROACH SLAB SHALL BE GRADED TO DRAIN THE WATER AWAY FROM THE FILL FACE OF THE BRIDGE AND SHALL BE PAVED. SEE ROADWAY PLANS.

THE JOINT OPENING AT THE APPROACH SLAB/DECK INTERFACE SHALL BE SAWED NO MORE THAN 12 HOURS AFTER THE APPROACH SLAB IS CAST. THE JOINT SHALL BE CLEANED OF ALL DEBRIS BEFORE THE SEALANT IS APPLIED. THE JOINT SEALER MATERIAL SHALL CONFORM TO THE REQUIREMENTS OF SECTION 1028-3 OF THE STANDARD SPECIFICATIONS.

ARC OFFSETS ON OUTSIDE EDGE OF SLAB ARE NEGLIGIBLE.

BILL OF MATERIAL

APPROACH SLAB AT END BENT #1

BAR	NO.	SIZE	TYPE	LENGTH	WEIGHT
* A1	26	#4	STR	33'-1"	575
A2	26	#4	STR	33'-1"	575
* B1	63	#5	STR	24'-2"	1588
B2	63	#6	STR	24'-8"	2334
REINFORCING STEEL				2909 LBS.	
* EPOXY COATED REINFORCING STEEL				2163 LBS.	

APPROACH SLAB AT END BENT #2

BAR	NO.	SIZE	TYPE	LENGTH	WEIGHT
* A1	26	#4	STR	33'-1"	575
A2	26	#4	STR	33'-1"	575
* B1	63	#5	STR	24'-2"	1588
B2	63	#6	STR	24'-8"	2334
REINFORCING STEEL				2909 LBS.	
* EPOXY COATED REINFORCING STEEL				2163	

CONCRETE QUANTITIES

INTEGRAL END BENT #1	
CLASS AA CONCRETE	30 C.Y.
INTEGRAL END BENT #2	
CLASS AA CONCRETE	30 C.Y.

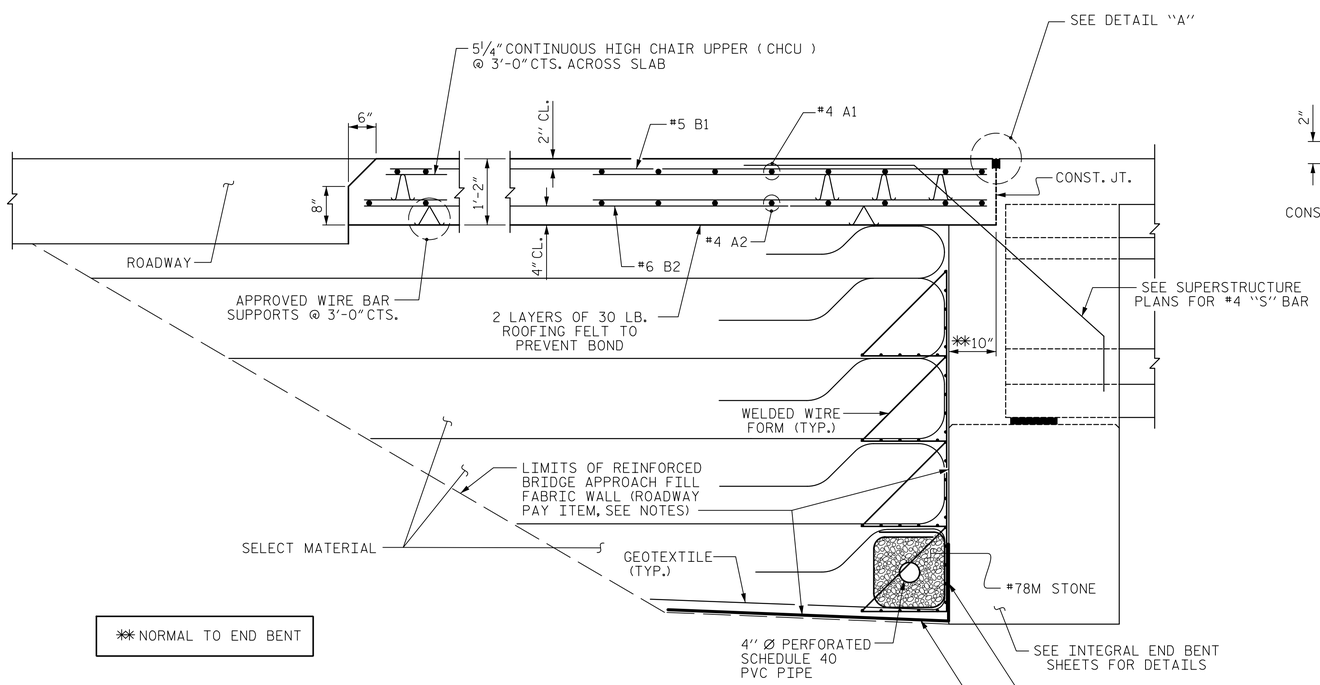

** NORMAL TO END BENT

SECTION THRU SLAB

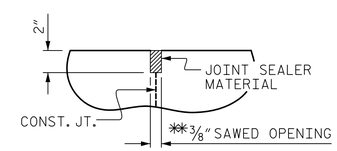

DETAIL "A"

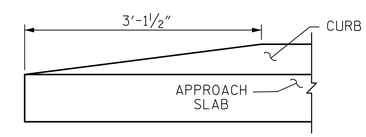

END OF CURB WITHOUT SHOULDER BERM GUTTER

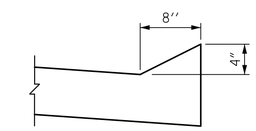

SECTION N-N

PROJECT NO. U-2579B

FORSYTH COUNTY

STATION: 33+15.67 -Y4CD-

DocuSigned by: Steven K. Doerrer A2D3D8EFA1D43F...
8/6/2014

NORTH CAROLINA PROFESSIONAL SEAL 16572 ENGINEER STEVEN K. DOERRER

STATE OF NORTH CAROLINA
DEPARTMENT OF TRANSPORTATION
RALEIGH

STANDARD

BRIDGE APPROACH SLAB FOR INTEGRAL ABUTMENT

Prepared by:
JACOBS
JACOBS ENGINEERING GROUP
111 CORNING ROAD, SUITE 200
CARY, NORTH CAROLINA 27518
TEL: (919) 859-5000

DWG. NO. 42 OF 43

REVISIONS						SHEET NO.
NO.	BY:	DATE:	NO.	BY:	DATE:	S-308
1			3			TOTAL SHEETS
2			4			707

ASSEMBLED BY : EML		DATE : 1/7/14	
CHECKED BY : OKH		DATE : 2/18/14	
DRAWN BY : TLA 10/05	REV. 10/1/11	MAA/GM	
CHECKED BY : GM 5/06	REV. 12/21/11	MAA/GM	
	REV. 6/13	MAA/GM	

STD. NO. BAS5 (SHT 2b)