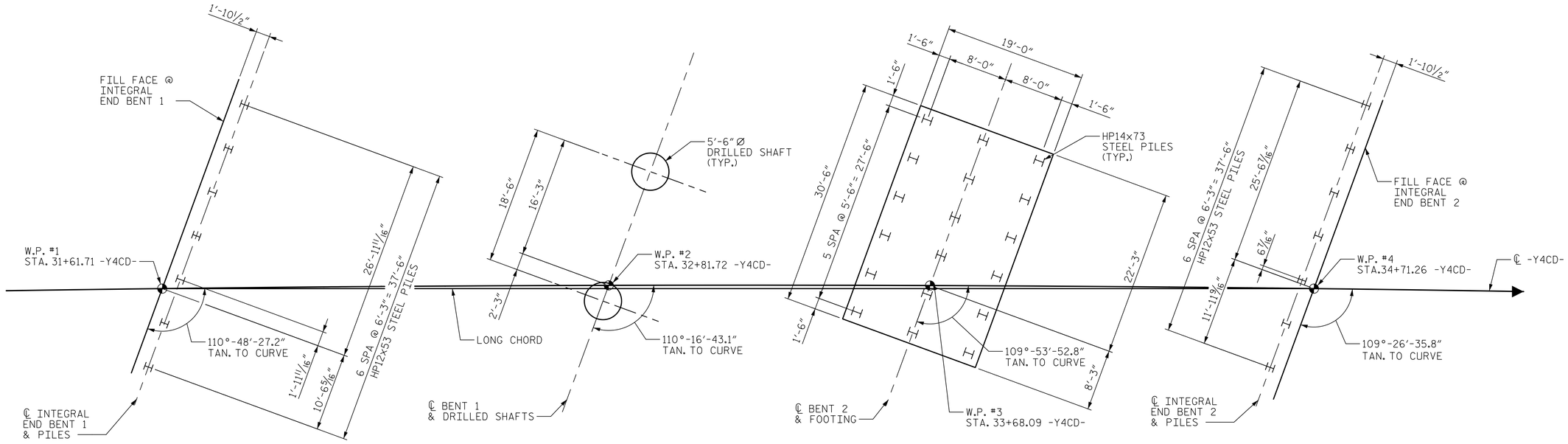

INTEGRAL END BENT 1 | BENT 1 | BENT 2 | INTEGRAL END BENT 2

FOUNDATION LAYOUT

NOTE:

DIMENSIONS LOCATING PILES ARE SHOWN TO THE PILE CENTERLINE AT BOTTOM OF CAP.

PROJECT NO. U-2579B

FORSYTH COUNTY

STATION: 33+15.67 -Y4CD-

SHEET 2 OF 4

DocuSigned by: Steven K Doerrer
A22D3D8EFA1D43F...
8/6/2014

NORTH CAROLINA PROFESSIONAL SEAL 16572 ENGINEER STEVEN K. DOERRER

Prepared by:
JACOBS
JACOBS ENGINEERING GROUP
111 CORNING ROAD, SUITE 200
CARY, NORTH CAROLINA 27518
TEL: (919) 859-5000

DWG. NO. 2 OF 43

STATE OF NORTH CAROLINA
DEPARTMENT OF TRANSPORTATION
RALEIGH

GENERAL DRAWING
FOR BRIDGE ON -Y4CD-
OVER SMITH CREEK
BETWEEN US-158 AND
US-421/I-40 BUS.
FOUNDATION LAYOUT

REVISIONS						SHEET NO.
NO.	BY:	DATE:	NO.	BY:	DATE:	S-268
1			3			TOTAL SHEETS
2			4			707

DRAWN BY : EML DATE : 6/18/14
CHECKED BY : OKH DATE : 6/18/14

$$$$$$SYSTIME$$$$$
$$$$$$$$$$$$$$$$$$$$DGN$$$$$$$$$$$$$$$$$$$$
$$$$USERNAME$$$$