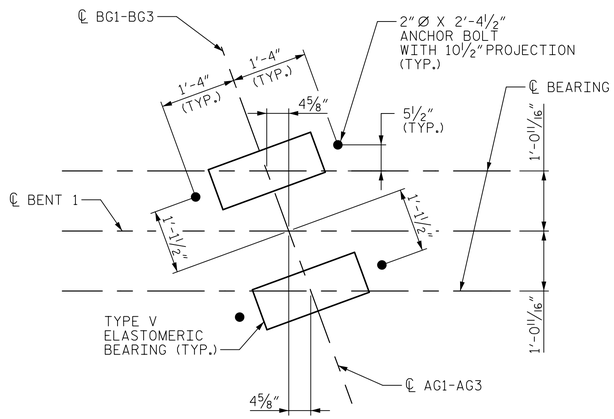

ANCHOR BOLT LAYOUT DETAIL

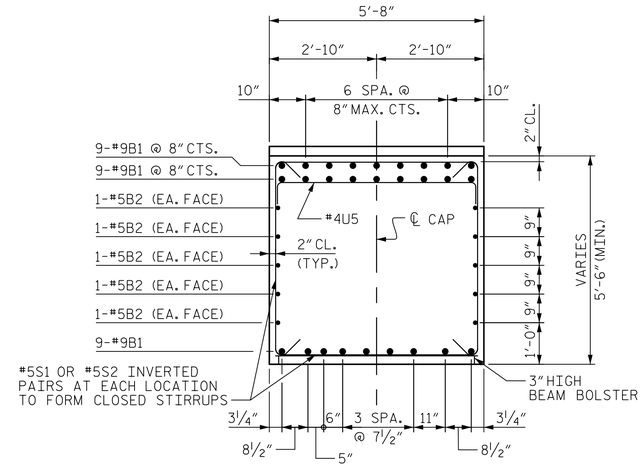

SECTION A-A

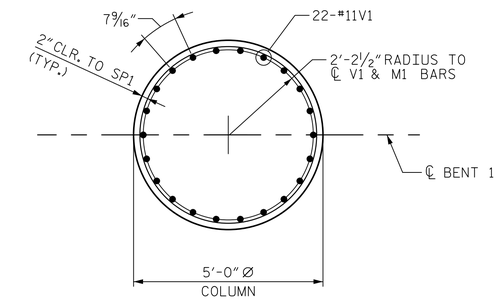

SECTION B-B

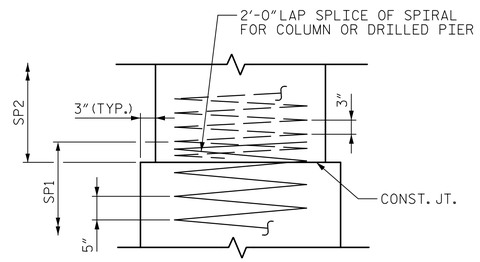

DRILLED PIER
CONSTRUCTION JOINT DETAIL

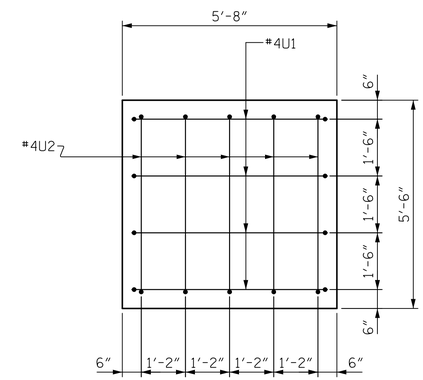

VIEW C-C

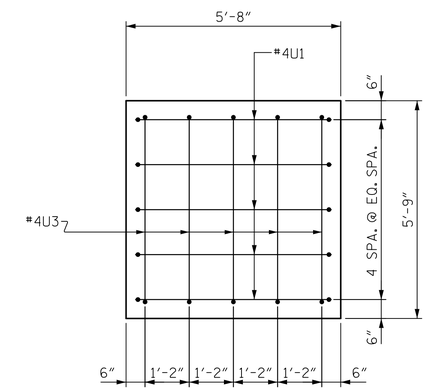

VIEW D-D

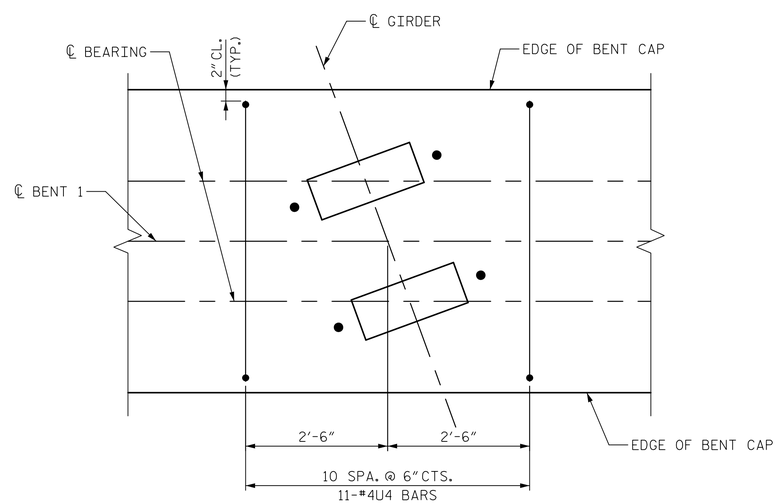

DETAIL "A"

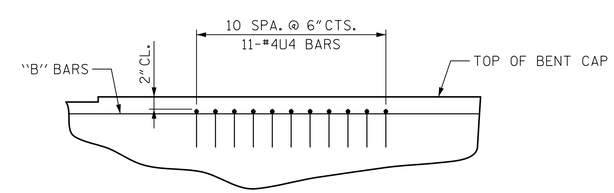

BEARING AREA
REINFORCEMENT DETAIL

DocuSigned by: Steven K. Doerner
A22D3DBEFA1D43F...
8/6/2014

NORTH CAROLINA PROFESSIONAL SEAL 16572 ENGINEER STEVEN K. DOERNER

PROJECT NO. U-2579B
FORSYTH COUNTY
STATION: 33+15.67 -Y4CD-

SHEET 2 OF 3

STATE OF NORTH CAROLINA
DEPARTMENT OF TRANSPORTATION
RALEIGH

SUBSTRUCTURE

BENT 1 DETAILS

Prepared by:
JACOBS
JACOBS ENGINEERING GROUP
111 CORNING ROAD, SUITE 200
CARY, NORTH CAROLINA 27518
TEL: (919) 859-5000

DWG. NO. 31 OF 43

REVISIONS						SHEET NO.
NO.	BY:	DATE:	NO.	BY:	DATE:	S-297
1			3			TOTAL SHEETS
2			4			707

DRAWN BY : HLS DATE : 6/12/14
CHECKED BY : OKH DATE : 6/19/14