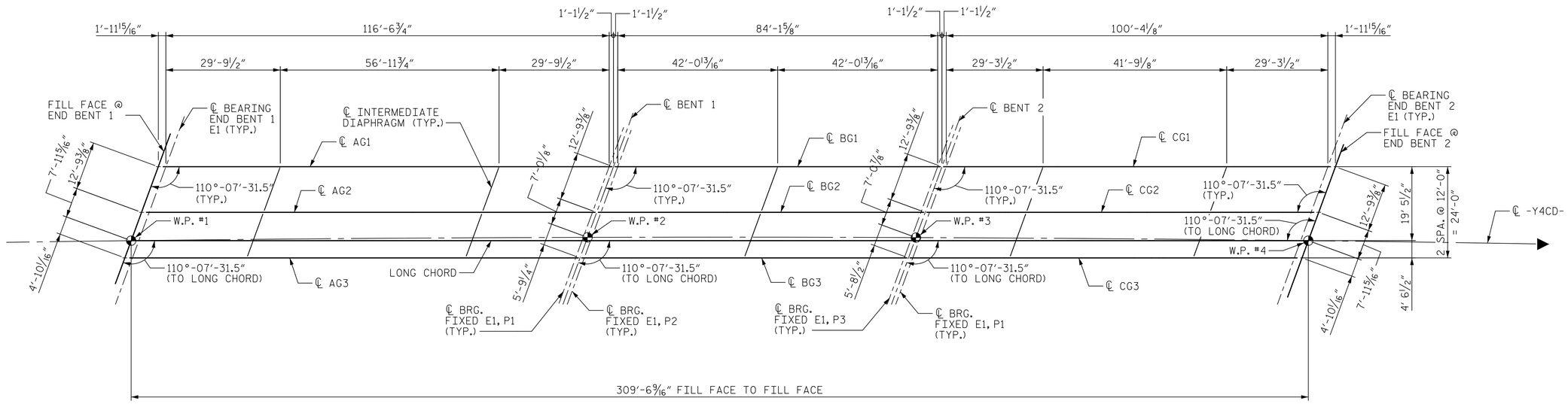

GIRDER FRAMING PLAN

ALL GIRDERS PARALLEL TO LONG CHORD

NOTE:

FOR ELASTOMERIC BEARING E1 AND SOLE PLATES P1, P2, AND P3, SEE "ELASTOMERIC BEARING DETAILS - PRESTRESSED CONCRETE GIRDER SUPERSTRUCTURE" SHEET.

PROJECT NO. U-2579B

FORSYTH COUNTY

STATION: 33+15.67 -Y4CD-

DocuSigned by: Steven K Doerrer A22D3DBEFA1D43F... 8/6/2014

NORTH CAROLINA PROFESSIONAL SEAL 16572 ENGINEER STEVEN K. DOERRER

Prepared by:

JACOBS

JACOBS ENGINEERING GROUP
111 CORNING ROAD, SUITE 200
CARY, NORTH CAROLINA 27518
TEL: (919) 859-5000

DWG. NO. 15 OF 43

STATE OF NORTH CAROLINA
DEPARTMENT OF TRANSPORTATION
RALEIGH

SUPERSTRUCTURE

GIRDER LAYOUT

REVISIONS						SHEET NO.
NO.	BY:	DATE:	NO.	BY:	DATE:	S-281
1			3			TOTAL SHEETS
2			4			707

DRAWN BY : EML DATE : 6/1/14
CHECKED BY : JBT DATE : 6/5/14

$$$$$$SYSTIME$$$$$
$$$$$$$$$$$$$$$$$$$$$$$$DGN$$$$$$$$$$$$$$$$$$$$$$$$
$$$$USERNAME$$$$