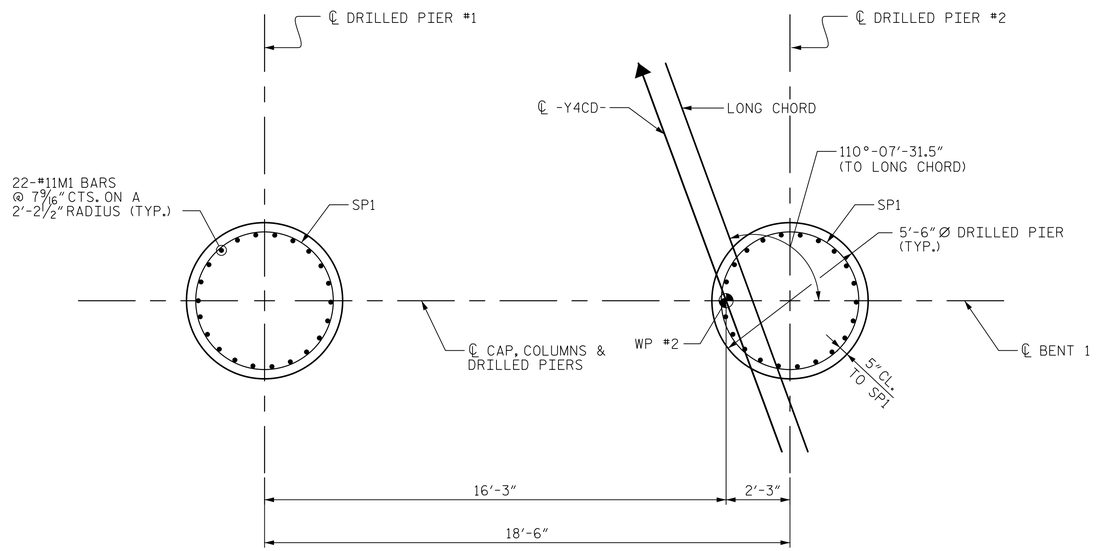

DRILLED PIER PLAN

BAR TYPES

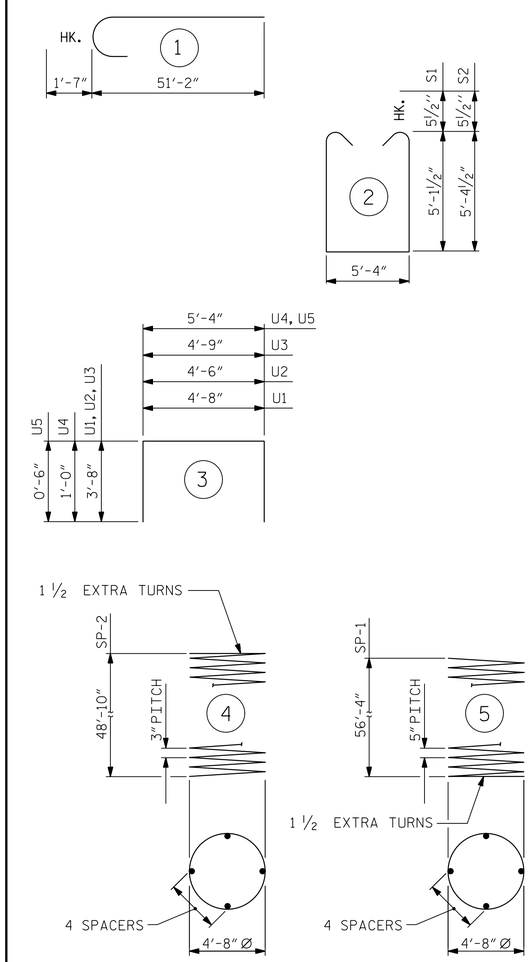

ALL BAR DIMENSIONS ARE OUT TO OUT.

REINFORCING BAR SCHEDULE

BAR	NO.	SIZE	TYPE	LENGTH	WEIGHT (LBS)
B1	27	#9	STR	30′-8″	2815
B2	10	#5	STR	30′-8″	320
B3	9	#4	STR	10′-0″	60
M1	88	#11	STR	36′-11″	17260
S1	54	#5	2	16′-6″	929
S2	26	#5	2	17′-0″	461
U1	9	#4	3	12′-0″	72
U2	5	#4	3	11′-10″	40
U3	5	#4	3	12′-1″	40
U4	33	#4	3	7′-4″	162
U5	7	#4	3	6′-4″	30
V1	44	#11	1	52′-9″	12331
REINFORCING STEEL				LBS.	34520
SP-1	2	*	5	2200′-9″	4591
SP-2	2	**	4	2880′-6″	3848
SPIRAL COLUMN					
REINFORCING STEEL				LBS.	8439
CLASS "A" CONCRETE BREAKDOWN					
POUR #2 COLUMNS				CY.	72.1
POUR #3 CAP				CY.	36.6
CLASS "A" CONCRETE				CY.	108.7
5′-6″ Ø DRILLED PIERS					
DRILLED PIER CONCRETE				CY.	95.6
5′-6″ Ø DRILLED PIERS NOT IN SOIL				LF.	34.0
5′-6″ Ø DRILLED PIERS IN SOIL				LF.	74.6
PERMANENT STEEL CASING FOR 5′-6″ Ø DRILLED PIER				LF.	10.6
SID INSPECTIONS				TOTAL	1
CSL TESTING				TOTAL	1
*** CSL TUBES				L.F.	669.8

* THE SP-1 SPIRAL REINFORCING STEEL SHALL BE W31 OR D-31 COLD DRAWN WIRE OR #5 PLAIN OR DEFORMED BAR.

** THE SP-2 SPIRAL REINFORCING STEEL SHALL BE W20 OR D-20 COLD DRAWN WIRE OR #4 PLAIN OR DEFORMED BAR.

*** NO SEPARATE PAYMENT WILL BE MADE FOR CSL TUBES. CSL TUBES WILL BE INCLUDED IN THE UNIT BID PRICE FOR DRILLED PIERS.

PROJECT NO. U-2579B
FORSYTH COUNTY
STATION: 33+15.67 -Y4CD-

SHEET 3 OF 3

DocuSigned by: Steven K. Doerner
A22D3D8EFA1D43F...
9/25/2014

NORTH CAROLINA PROFESSIONAL SEAL 16572 ENGINEER STEVEN K. DOERNER

Prepared by:
JACOBS
JACOBS ENGINEERING GROUP
111 CORNING ROAD, SUITE 200
CARY, NORTH CAROLINA 27518
TEL: (919) 859-5000

DWG. NO. 32 OF 43

STATE OF NORTH CAROLINA
DEPARTMENT OF TRANSPORTATION
RALEIGH

SUBSTRUCTURE

BENT 1
DRILLED PIER DETAILS AND BILL OF MATERIALS

REVISIONS						SHEET NO.
NO.	BY:	DATE:	NO.	BY:	DATE:	S-298
1			3			TOTAL SHEETS
2			4			707

DRAWN BY : EML DATE : 6/19/14
CHECKED BY : OKH DATE : 6/20/14

$$$$$$SYSTIME$$$$$
$$$$$$$$$$$$$$$$$$$$$$$$DGN$$$$$$$$$$$$$$$$$$$$$$
$$$$USERNAME$$$$