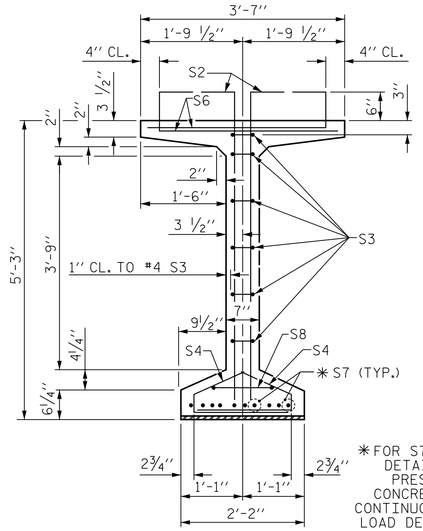

SECTION B-B

* FOR S7 BARS, SEE DETAIL "C" OF PRESTRESSED CONCRETE GIRDER CONTINUOUS FOR LIVE LOAD DETAILS SHEET

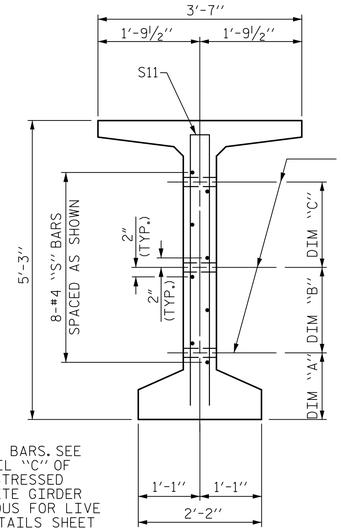

℄ 1 1/2" Ø FORMED HOLE. SEE "INTERMEDIATE STEEL DIAPHRAGMS" SHEET FOR LOCATION & DIM. "A", "B" & "C".

SECTION C-C

(S1, S6 AND S9 BARS NOT SHOWN)

DEBONDING LEGEND

- ● FULLY BONDED STRANDS
- ⊙ STRANDS DEBONDED FOR 2'-0" FROM END OF GIRDER
- ▣ STRANDS DEBONDED FOR 4'-0" FROM END OF GIRDER

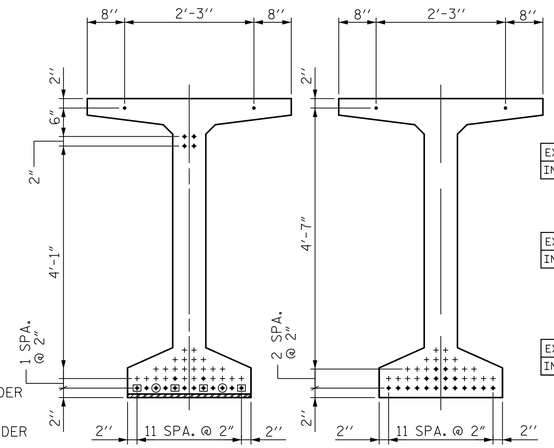

AT END OF GIRDER

AT ℄ OF GIRDER

0.6" Ø LOW RELAXATION STRAND LAYOUT

NOTE:
THE TRANSFER OF LOAD FROM THE ANCHORAGES TO THE GIRDER SHALL BE DONE WHEN CONCRETE HAS REACHED A COMPRESSIVE STRENGTH OF NOT LESS THAN 6000 PSI.

0.6" Ø L. R. GRADE 270 STRANDS

AREA (SQUARE INCHES)	ULTIMATE STRENGTH (LBS. PER STRAND)	APPLIED PRESTRESS (LBS. PER STRAND)
0.217	58,600	43,950

REINFORCING STEEL FOR ONE GDR

	BAR	NUMBER	SIZE	TYPE	LENGTH	WEIGHT
EXTERIOR GDR.	S1	202	#4	1	6'-1"	821
INTERIOR GDR.	S1	202	#4	1	6'-1"	821
	S2	32	#5	1	6'-1"	204
	S3	12	#4	2	8'-5"	68
	S4	128	#4	3	3'-0"	257
EXTERIOR GDR.	S6	234	#5	4	4'-4"	1058
INTERIOR GDR.	S6	234	#5	4	4'-4"	1058
	* S7	20	#5	STR	3'-8"	77
	S8	2	#5	2	9'-0"	19
	S9	26	#5	STR	3'-3"	89
	S10	2	#3	STR	1'-10"	2
EXTERIOR GDR.	S11	4	#5	5	10'-0"	42
INTERIOR GDR.	S11	4	#5	5	10'-0"	42
	S12	8	#4	STR	8'-0"	43

* NOTE: S7 BARS SHALL BE BENT BEFORE SHIPMENT. HEAT BENDING SHALL NOT BE ALLOWED.

BAR TYPES

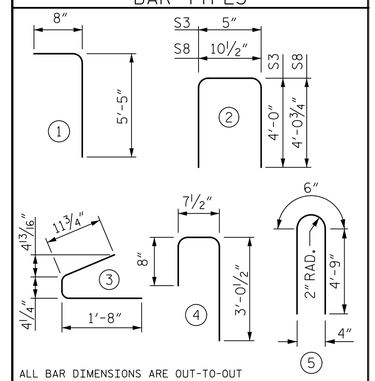

ALL BAR DIMENSIONS ARE OUT-TO-OUT

QUANTITIES FOR ONE GIRDER

	REINFORCING STEEL	7500 PSI CONCRETE	0.6" Ø L.R. STRANDS
	LB.	C.Y.	No.
EXTERIOR GIRDER	2680	16.95	20
INTERIOR GIRDER	2680	16.95	20

GIRDERS REQUIRED

NUMBER	LENGTH	TOTAL LENGTH
3	85'-6 5/8"	256'-7 7/8"

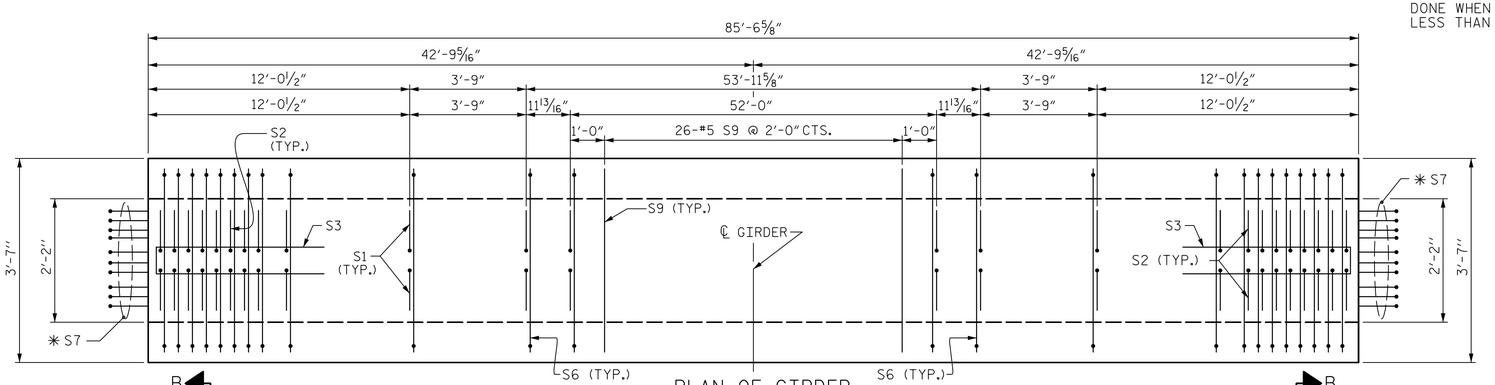

PLAN OF GIRDER

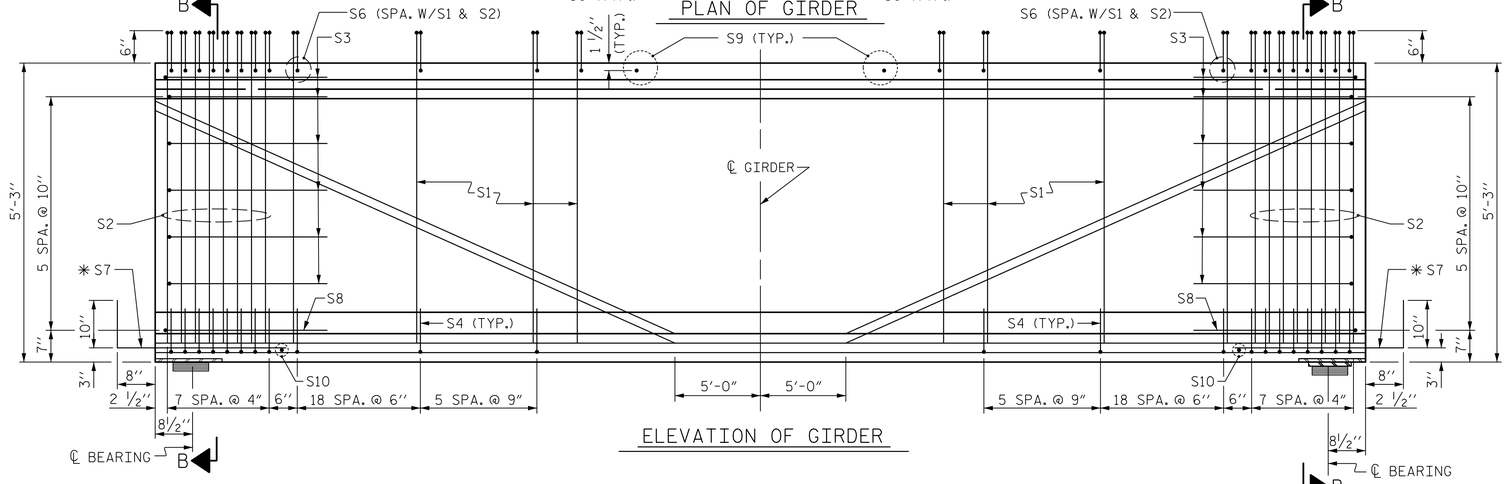

ELEVATION OF GIRDER

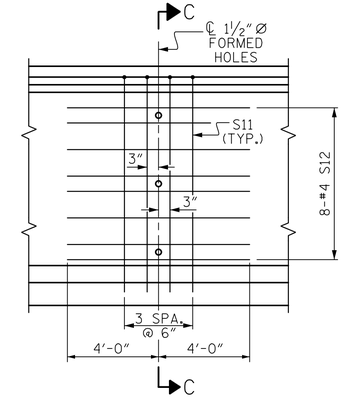

PARTIAL ELEVATION

SHOWING INTERMEDIATE STEEL DIAPHRAGM REINFORCING STEEL

PROJECT NO. U-2579B

FORSYTH COUNTY

STATION: 33+15.67 -Y4CD-

SHEET 2 OF 3

DocuSigned by: Steven K. Doerrer
A22D3D8EFA1D43F...
8/6/2014

NORTH CAROLINA PROFESSIONAL SEAL 16572 ENGINEER STEVEN K. DOERRER

Prepared by:
JACOBS
JACOBS ENGINEERING GROUP
111 CORNING ROAD, SUITE 200
CARY, NORTH CAROLINA 27518
TEL: (919) 859-5000

DWG. NO. 17 OF 43

STATE OF NORTH CAROLINA
DEPARTMENT OF TRANSPORTATION
RALEIGH

STANDARD

63" PRESTRESSED CONCRETE MODIFIED BULB TEE CONTINUOUS FOR LIVE LOAD SPAN B

REVISIONS						
NO.	BY:	DATE:	NO.	BY:	DATE:	
1			3			
2			4			

SHEET NO. S-283

TOTAL SHEETS 707

ASSEMBLED BY :	HLS	DATE :	6/2/14
CHECKED BY :	OKH	DATE :	6/2/14
DRAWN BY : EEM 2/6/97	REV. 10/17/00	RWW/LES	
CHECKED BY : VAP 2/6/97	REV. 5/1/06R	TLA/GM	
	REV. 10/1/11	MAA/GM	

STD. NO. PCG7 (Sht. 1)