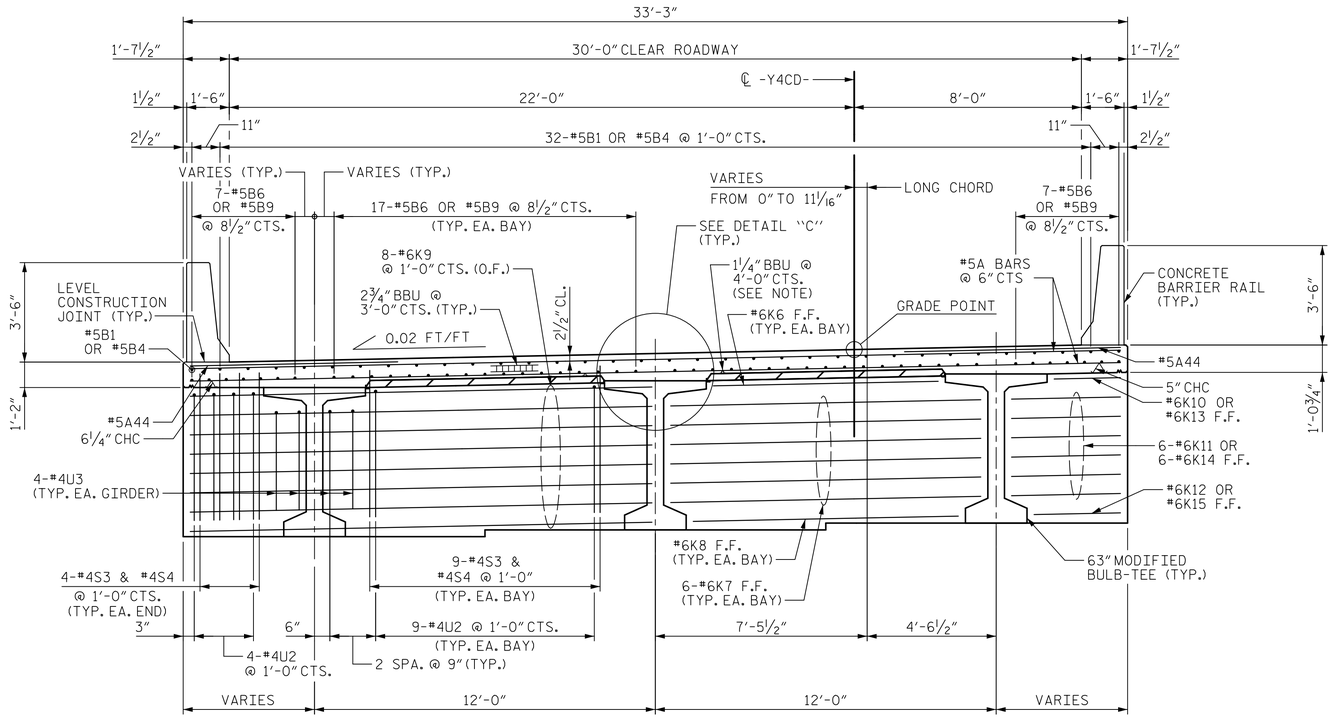

TYPICAL SECTION

(SHOWING INTEGRAL END BENT DIAPHRAGM)

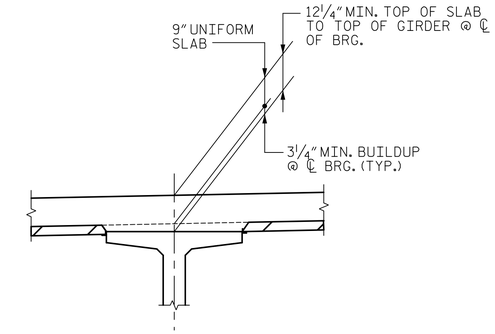

DETAIL "C"

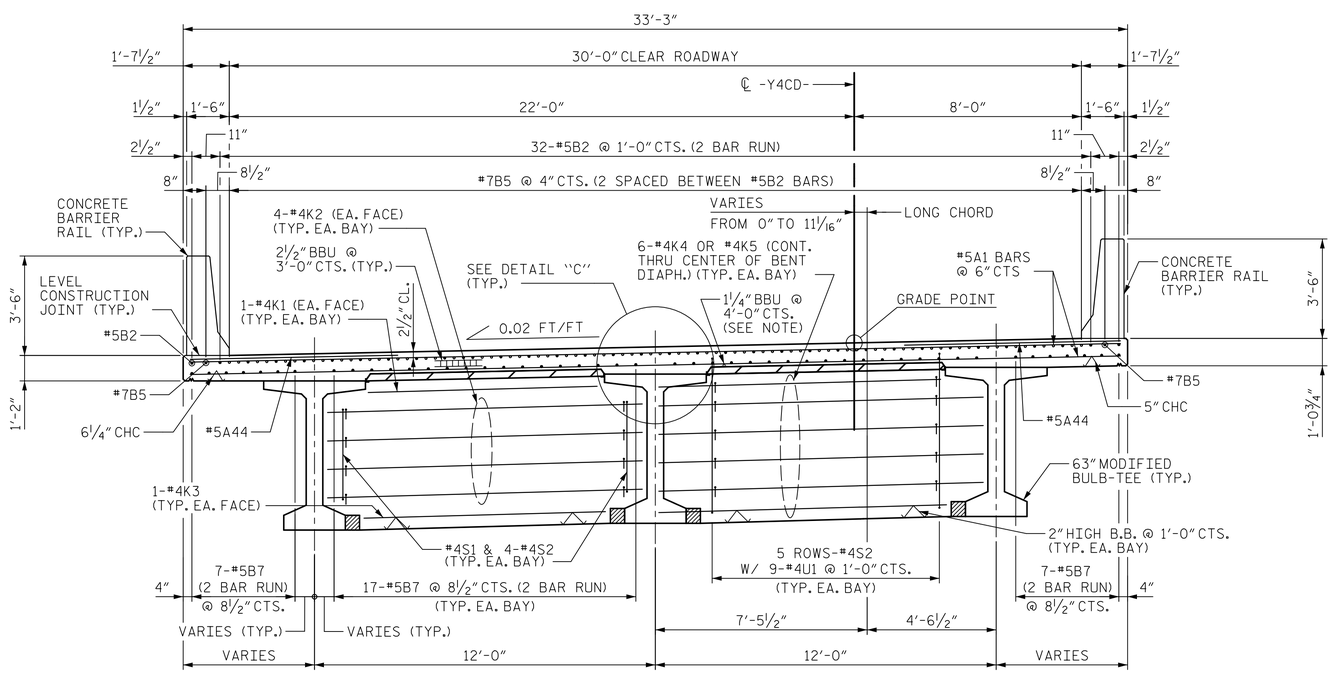

TYPICAL SECTION

(SHOWING CONTINUOUS BENT DIAPHRAGM AT BENT 1 & 2)

NOTE:

1. SEE SHEET "TYPICAL SECTION AT MIDSPAN" FOR NOTES.

PROJECT NO. U-2579B

FORSYTH COUNTY

STATION: 33+15.67 -Y4CD-

DocuSigned by: Steven K. Doerrer A22D3DBEFA1D43F... 8/6/2014

NORTH CAROLINA PROFESSIONAL SEAL 16572 ENGINEER STEVEN K. DOERRER

Prepared by:

JACOBS

JACOBS ENGINEERING GROUP
111 CORNING ROAD, SUITE 200
CARY, NORTH CAROLINA 27518
TEL: (919) 859-5000

DWG. NO. 6 OF 43

STATE OF NORTH CAROLINA
DEPARTMENT OF TRANSPORTATION
RALEIGH

SUPERSTRUCTURE

TYPICAL SECTIONS AT END BENTS AND BENTS

REVISIONS						SHEET NO.
NO.	BY:	DATE:	NO.	BY:	DATE:	S-272
1			3			TOTAL SHEETS
2			4			707

DRAWN BY : EML DATE : 9/26/13
CHECKED BY : OKH DATE : 12/11/13

$$$$$$$$STYLE$$$$$$$$
$$$$$$$$$$$$$$$$$$$$$$$$DGN$$$$$$$$$$$$$$$$$$$$$$$$
$$$$USERNAME$$$$