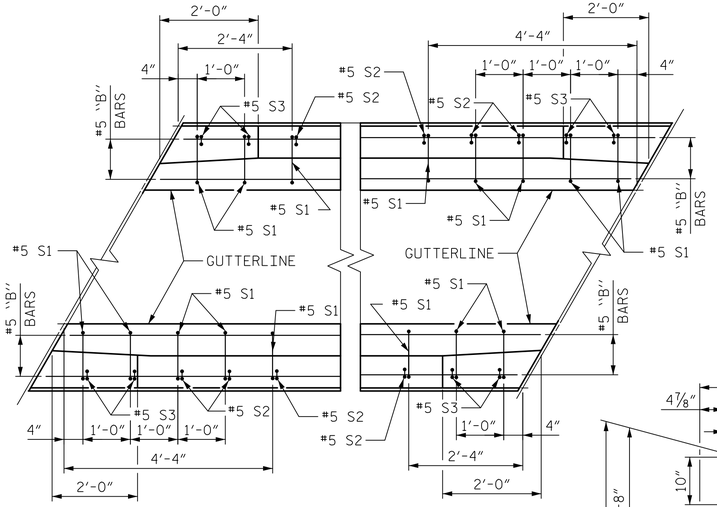

PLAN

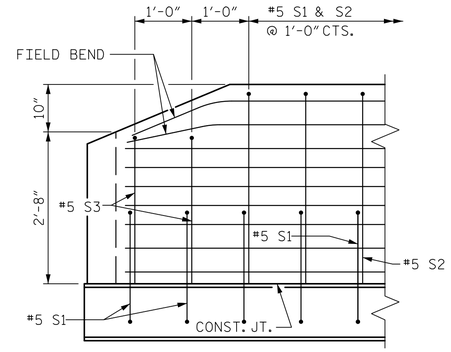

SIDE VIEW

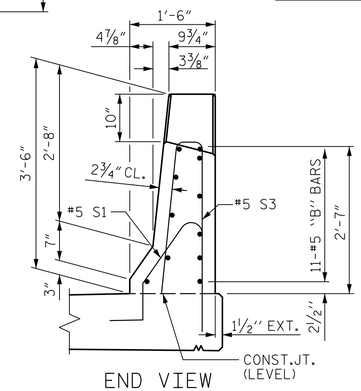

END VIEW

END OF RAIL DETAILS

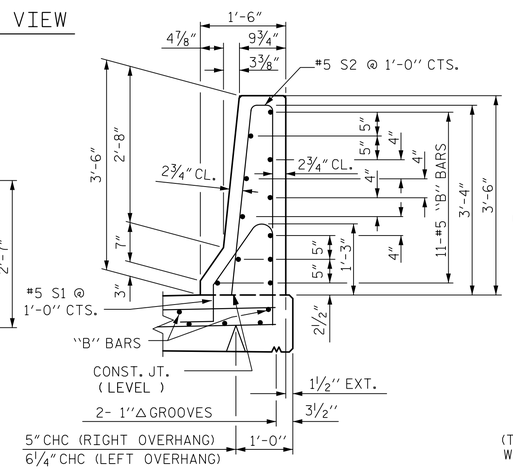

SECTION THRU RAIL

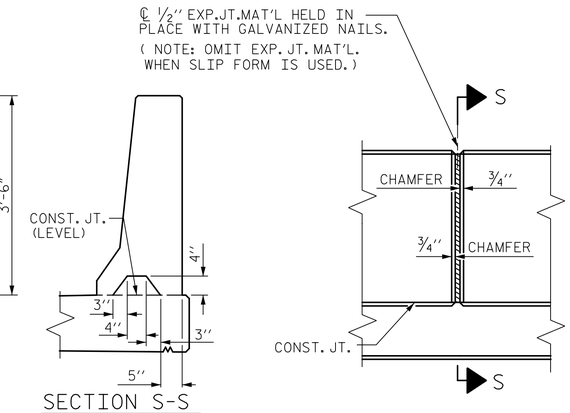

SECTION S-S

AT DAM IN OPEN JOINT (THIS IS TO BE USED ONLY WHEN SLIP FORM IS USED)

ELEVATION AT EXPANSION JOINTS

BARRIER RAIL DETAILS

NOTES

THE BARRIER RAIL IN EACH CONTINUOUS UNIT SHALL NOT BE CAST UNTIL ALL SLAB CONCRETE IN THAT UNIT HAS BEEN CAST AND HAS REACHED A MINIMUM COMPRESSIVE STRENGTH OF 3,000 PSI.

ALL REINFORCING STEEL IN BARRIER RAILS SHALL BE EPOXY COATED.

GROOVED CONTRACTION JOINTS, 1/2" IN DEPTH, SHALL BE TOOLED IN ALL EXPOSED FACES OF THE BARRIER RAIL AND IN ACCORDANCE WITH ARTICLE 825-10(B) OF THE STANDARD SPECIFICATIONS. THE CONTRACTION JOINT SHALL BE LOCATED AT EACH THIRD POINT BETWEEN BARRIER RAIL EXPANSION JOINTS. ONLY ONE CONTRACTION JOINT IS REQUIRED AT MIDPOINT OF BARRIER RAIL SEGMENTS LESS THAN 20 FEET IN LENGTH AND NO CONTRACTION JOINTS ARE REQUIRED FOR THOSE SEGMENTS LESS THAN 10 FEET IN LENGTH.

BAR TYPES

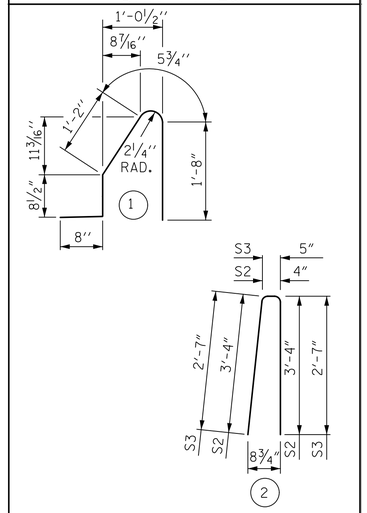

ALL BAR DIMENSIONS ARE OUT TO OUT

BILL OF MATERIAL

FOR CONCRETE BARRIER RAIL ONLY

BAR	NO.	SIZE	TYPE	LENGTH	WEIGHT
* S1	625	#5	1	4'-8 1/4"	3056
* S2	617	#5	2	7'-0"	4505
* S3	8	#5	2	5'-7"	47
* B1	88	#5	STR	23'-2"	2126
* B2	44	#5	STR	29'-1"	1335
* B3	33	#5	STR	25'-4"	872
* B4	33	#5	STR	25'-2"	866
* B5	11	#5	STR	24'-4"	279
* B6	5	#5	STR	24'-10"	130
* B7	6	#5	STR	24'-9"	155
* B8	5	#5	STR	24'-3"	126
* B9	6	#5	STR	24'-11"	156
* B10	6	#5	STR	25'-6"	160
* B11	5	#5	STR	25'-9"	134
* B12	22	#5	STR	27'-1"	621

* EPOXY COATED REINFORCING STEEL	14,567 LBS.
CLASS AA CONCRETE	83.7 CU. YDS.
CONCRETE BARRIER RAIL	615.49 LIN. FT.

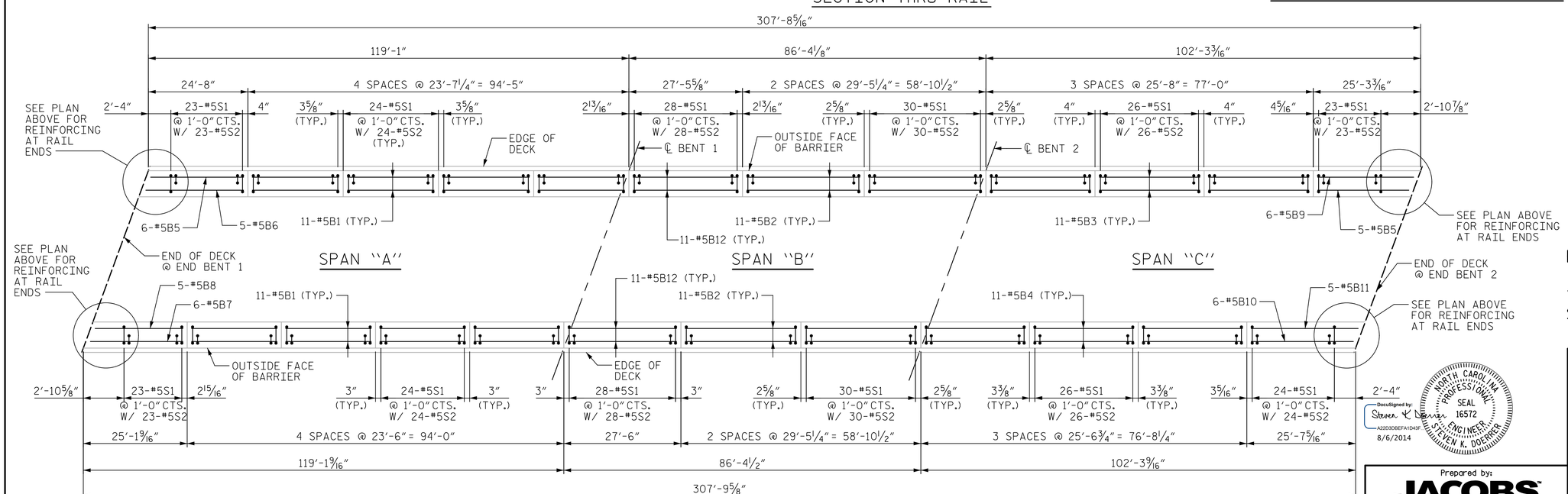

BARRIER RAIL PLAN

ALL DIMENSIONS MEASURED ALONG OUTSIDE EDGE OF BARRIER

PROJECT NO. U-2579B

FORSYTH COUNTY

STATION: 33+15.67 -Y4CD-

STATE OF NORTH CAROLINA
DEPARTMENT OF TRANSPORTATION
RALEIGH

STANDARD

CONCRETE BARRIER RAIL

DocuSigned by: Steven K. Doerrer
A22D3D8EFA1D43F...
8/6/2014

NORTH CAROLINA PROFESSIONAL SEAL 16572 ENGINEER STEVEN K. DOERRER

Prepared by:
JACOBS
JACOBS ENGINEERING GROUP
111 CORNING ROAD, SUITE 200
CARY, NORTH CAROLINA 27518
TEL: (919) 859-5000

DWG. NO. 23 OF 43

REVISIONS						
NO.	BY:	DATE:	NO.	BY:	DATE:	
1			3			
2			4			

SHEET NO. S-289

TOTAL SHEETS 707

ASSEMBLED BY : EML		DATE : 9/26/13	
CHECKED BY : OKH		DATE : 12/3/13	
DRAWN BY : ARB 5/87	REV. 5/7/03R	RWW/JTE	
CHECKED BY : SJD 9/87	REV. 5/1/06R	TLA/GM	
	REV. 10/1/11	MAA/GM	

STD. NO. CBR1 (SHT 2)