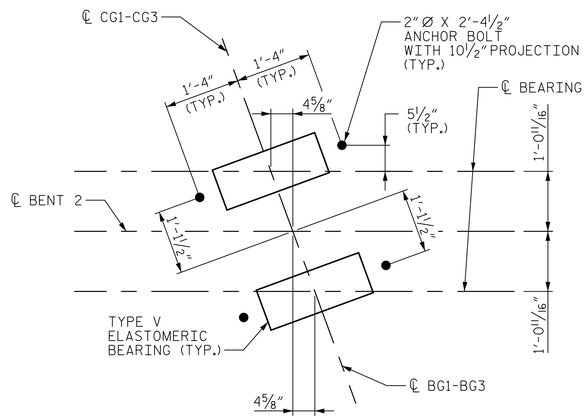

ANCHOR BOLT LAYOUT DETAIL

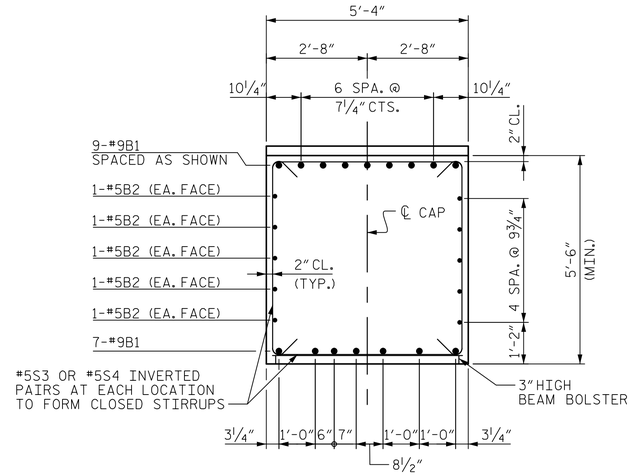

SECTION A-A

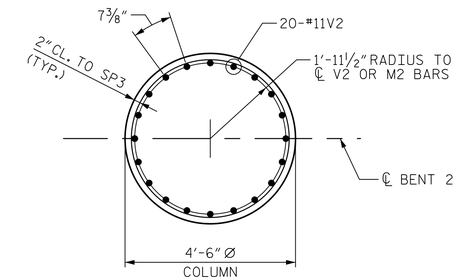

SECTION B-B

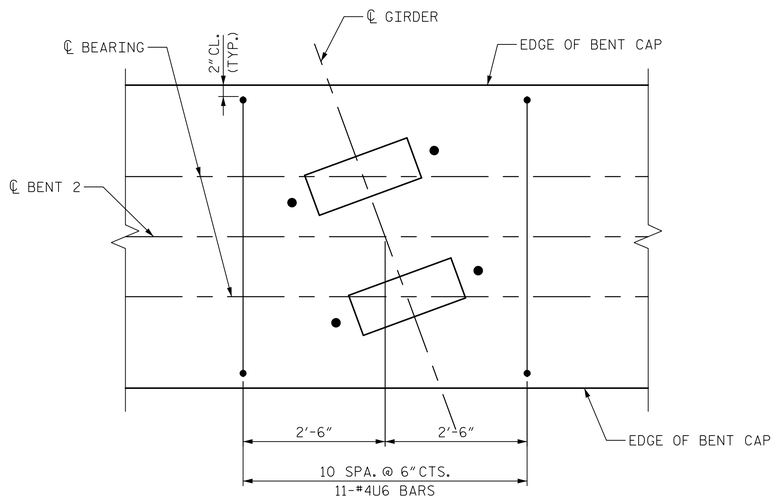

DETAIL "A"

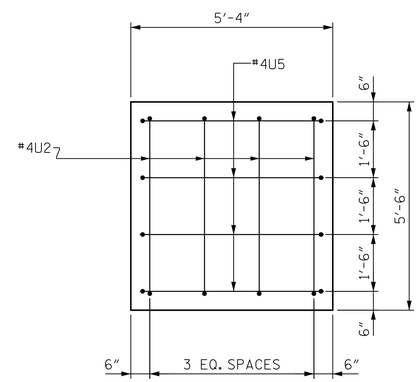

VIEW C-C

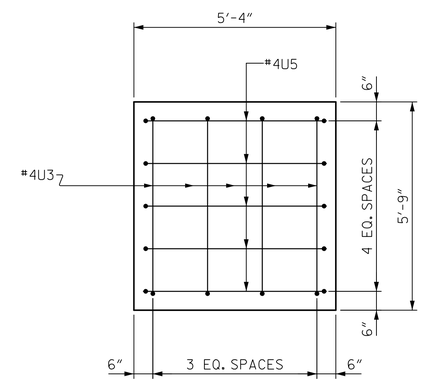

VIEW D-D

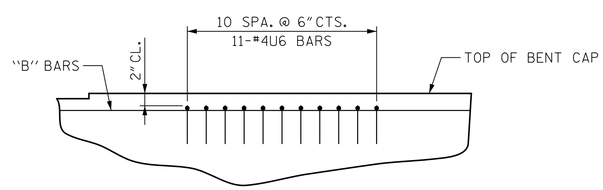

BEARING AREA REINFORCEMENT DETAIL

PROJECT NO. U-2579B

FORSYTH COUNTY

STATION: 33+15.67 -Y4CD-

SHEET 2 OF 3

DocuSigned by: Steven K Doerper
A22D3DBEFA1D43F...
8/6/2014

NORTH CAROLINA PROFESSIONAL SEAL 16572 ENGINEER STEVEN K. DOERPER

Prepared by:
JACOBS
JACOBS ENGINEERING GROUP
111 CORNING ROAD, SUITE 200
CARY, NORTH CAROLINA 27518
TEL: (919) 859-5000

DWG. NO. 34 OF 43

STATE OF NORTH CAROLINA
DEPARTMENT OF TRANSPORTATION
RALEIGH

SUBSTRUCTURE

BENT 2 DETAILS

REVISIONS						SHEET NO.
NO.	BY:	DATE:	NO.	BY:	DATE:	S-300
1			3			TOTAL SHEETS
2			4			707

DRAWN BY : HLS DATE : 6/12/14
CHECKED BY : JBT DATE : 6/18/14

$$$$$$$$STLDMS$$$$$$
$$$$$$$$$$$$$$$$$$$$$$$$$$$$$$$$DGN$$$$$$$$$$$$$$$$$$$$$$$$
$$$$USERNAME$$$$