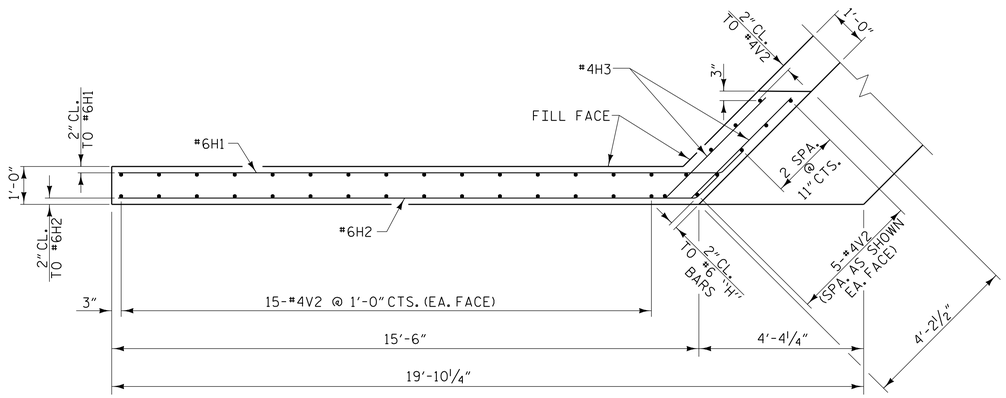

PLAN OF LEFT WING - W1

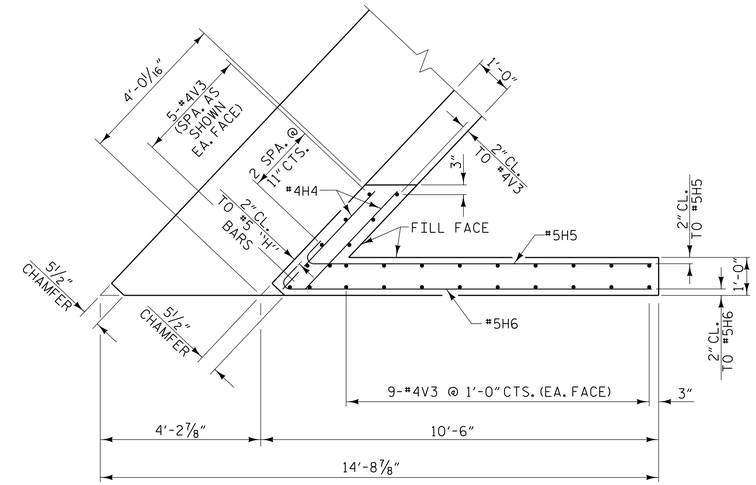

PLAN OF RIGHT WING - W2

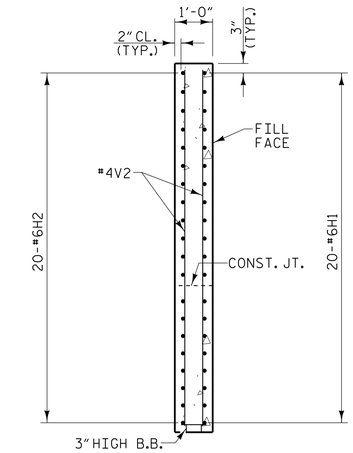

SECTION X-X

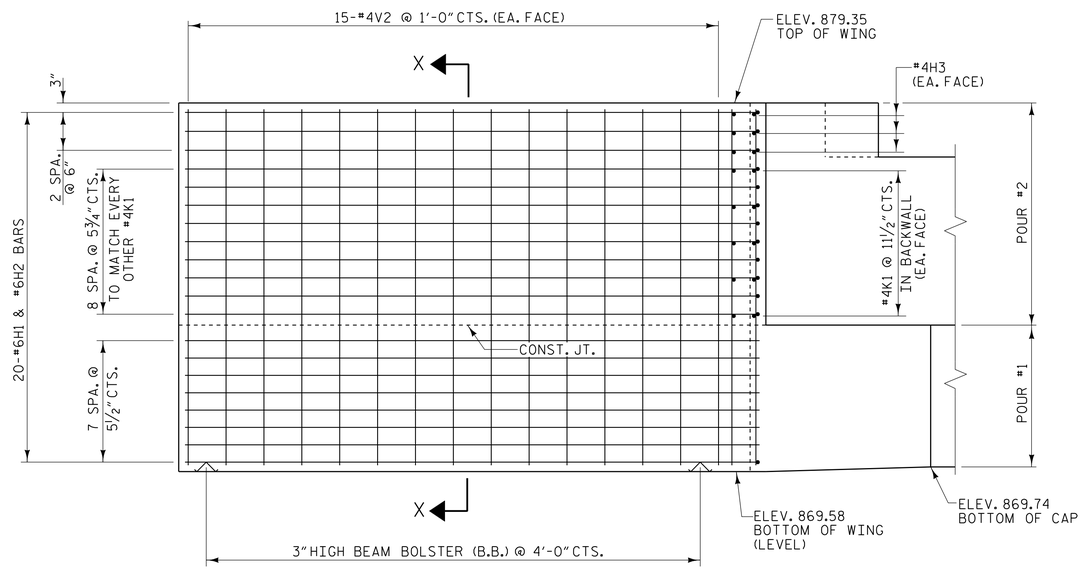

ELEVATION OF LEFT WING - W1

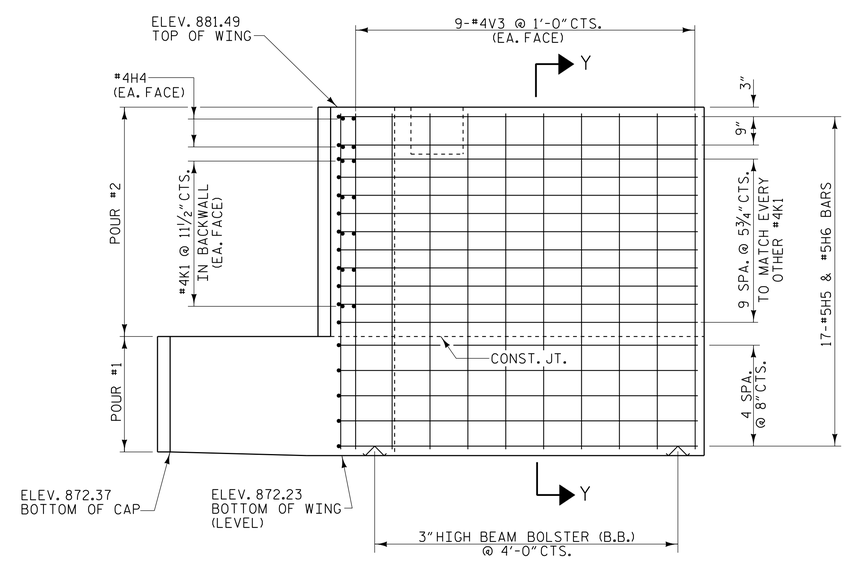

ELEVATION OF RIGHT WING - W2

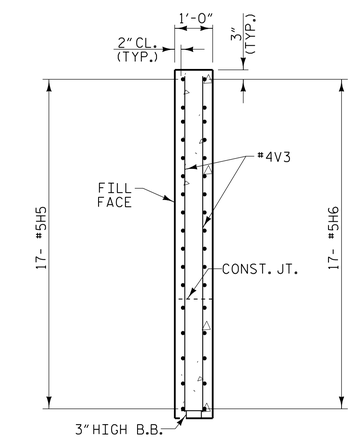

SECTION Y-Y

PROJECT NO. U-2579B

FORSYTH COUNTY

STATION: 17+10.00 -Y4RPA-

SHEET 2 OF 3

STATE OF NORTH CAROLINA
DEPARTMENT OF TRANSPORTATION
RALEIGH

SUBSTRUCTURE

END BENT #2

DRAWN BY : W. B. ALLEN	DATE : 10/13	
CHECKED BY : T. R. PETERSON	DATE : 11/13	
DESIGN ENGINEER OF RECORD: T. R. PETERSON	DATE : 4/23/14	

PLANS PREPARED BY:
MULKEY ENGINEERS & CONSULTANTS
PO Box 33127
RALEIGH, N.C. 27636
(919) 851-1912
(919) 851-1918 (FAX)
WWW.MULKEYINC.COM
NC LICENSE NO. C-1021

NORTH CAROLINA PROFESSIONAL SEAL 034352 ENGINEER TERRY R. PETERSON
5/19/2014
DocuSigned by: Terry R. Peterson
6DC417164 7CD40F...

DWG. NO. RPA-44

REVISIONS							SHEET NO.
NO.	BY:	DATE:	NO.	BY:	DATE:		S-261
1			3				TOTAL SHEETS
2			4				707

STR #7

5/9/2014 8:32:45 AM R:\Structures\U-2579B Ramp A\U-2579B_RPA_SD_E2_02.dgn