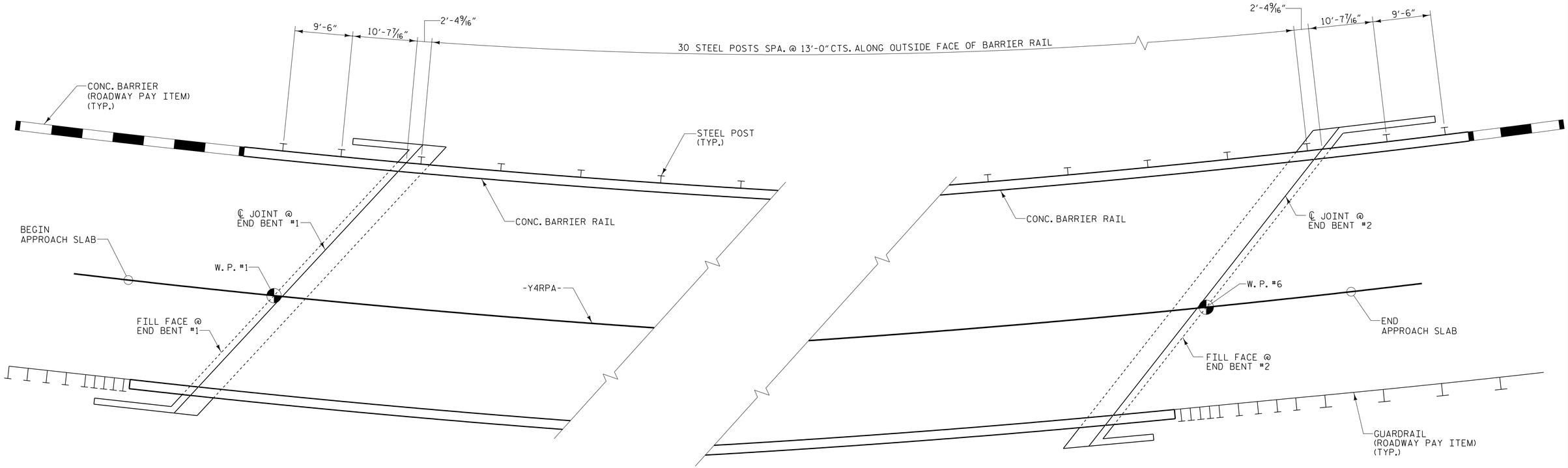

PLAN OF SOUND BARRIER WALL LAYOUT

NOTES

WALL SUPPORT SYSTEM

POSTS SHALL BE AASHTO 270 GRADE 36 STRUCTURAL STEEL - GALVANIZED TO AASHTO M111 AND IN ACCORDANCE TO SECTION 1076 OF THE STANDARD SPECIFICATIONS.

BEARING PLATES, BOLTS, NUTS AND WASHERS (EXCLUDING 7/8" Ø ANCHOR BOLTS) SHALL CONFORM TO THE REQUIREMENTS OF ASTM A325 AND SHALL BE GALVANIZED IN ACCORDANCE TO AASHTO M111.

ALL POSTS SHALL BE PLUMB.

SOUND BARRIER WALL

COLOR TO THE SOUND BARRIER WALL PANEL SHALL BE UNIFORM THROUGHOUT THE PULTRUDED COMPOSITE AND IS TO BE APPROVED BY THE ENGINEER.

SOUND BARRIER WALL SHALL BE DESIGNED TO WITHSTAND A MINIMUM WIND VELOCITY OF 100 MPH AND A MINIMUM WIND PRESSURE OF 0.04 KSF.

WEIGHT OF SOUND BARRIER WALL SHALL NOT EXCEED 100 LBS/FT.

SOUND BARRIER WALL SHALL CONSIST OF STACKED TONGUE AND GROOVE STRUCTURAL PLANKS AS DETAILED ON PLANS. THE PLANKS SHALL BE COMPRISED OF A PULTRUDED GLASS REINFORCED THERMOSET COMPOSITE STRUCTURAL BOX FILLED WITH RECYCLED TIRE RUBBER OR ANOTHER SUBSTANCE OF COMPARABLE DENSITY AND NOISE REDUCTION CAPABILITY. ENDS SHALL BE CAPPED TO NOT ALLOW FILL MATERIAL TO FALL OUT.

LENGTH OF PLANKS SHALL BE CUT TO A LENGTH NO LESS THAN 4" LESS THAN THE CLEAR SPACING PROVIDED BETWEEN SUPPORT POSTS, NOR SHALL THE LENGTH BE GREATER THAN 3" LESS THAN THE CLEAR SPACING PROVIDED BETWEEN SUPPORT POSTS.

PLANKS SHALL BE CUT SO THAT THE ENDS ARE SMOOTH AND PERPENDICULAR TO EACH PLANK'S BASE AND SHALL BE APPROVED BY THE ENGINEER.

EACH PANEL SHALL BE PLACED SO THAT THE TOP OF THE FINISHED PANEL MEETS FLUSH WITH THE TOP OF EACH SUPPORT POST.

FOR ELASTOMERIC BEARINGS, SEE SECTION 1079 OF THE STANDARD SPECIFICATIONS.

FOR BRIDGE MOUNTED SOUND BARRIER WALL, SEE SPECIAL PROVISIONS.

PROJECT NO. U-2579B
FORSYTH COUNTY
STATION: 17+10.00 -Y4RPA-

STATE OF NORTH CAROLINA
DEPARTMENT OF TRANSPORTATION
RALEIGH

SUPERSTRUCTURE

SOUND BARRIER WALL LAYOUT

PLANS PREPARED BY:
MULKEY ENGINEERS & CONSULTANTS
PO Box 33127
RALEIGH, N.C. 27636
(919) 851-1912
(919) 851-1918 (FAX)
WWW.MULKEYINC.COM
NC LICENSE NO. C-1021

NORTH CAROLINA PROFESSIONAL SEAL 034352 ENGINEER TERRY R. PETERSON
5/19/2014
DocuSigned by: Terry R. Peterson
6DC417164 7CD40F...

DWG. NO. RPA-26

REVISIONS						SHEET NO.
NO.	BY:	DATE:	NO.	BY:	DATE:	S-243
1			3			TOTAL SHEETS
2			4			707

STR #7

DRAWN BY :	W. B. ALLEN	DATE :	4/14
CHECKED BY :	T. R. PETERSON	DATE :	4/14
DESIGN ENGINEER OF RECORD:	T. R. PETERSON	DATE :	4/23/14

5/19/2014 8:59:19 AM R:\Structures\U-2579B Ramp A\U-2579B_RPA_SD_SBW_01.dgn