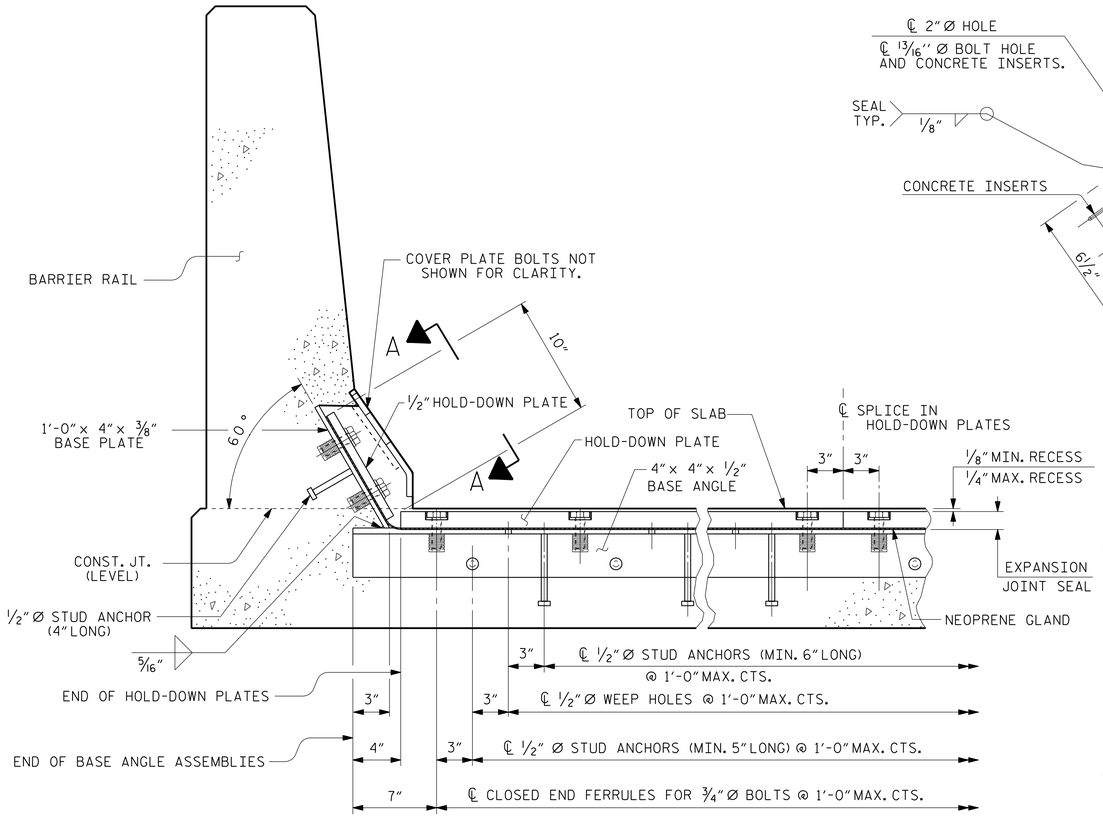

SECTION THRU RAIL NORMAL TO JOINT

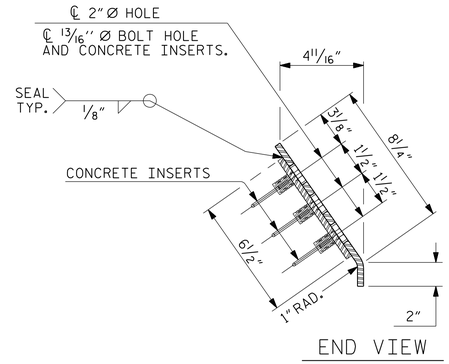

END VIEW

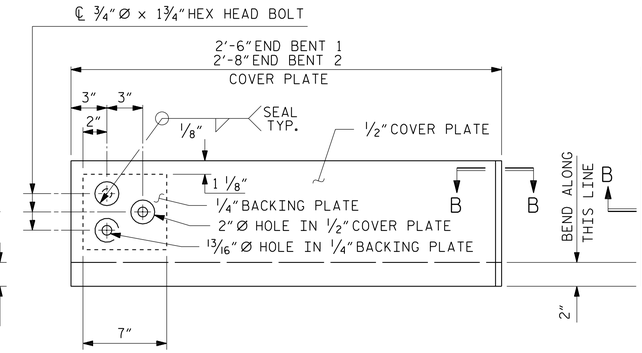

TYPE I - ELEVATION VIEW

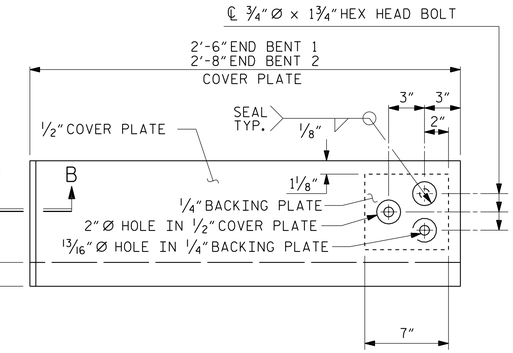

TYPE II - ELEVATION VIEW

COVER PLATE DETAILS

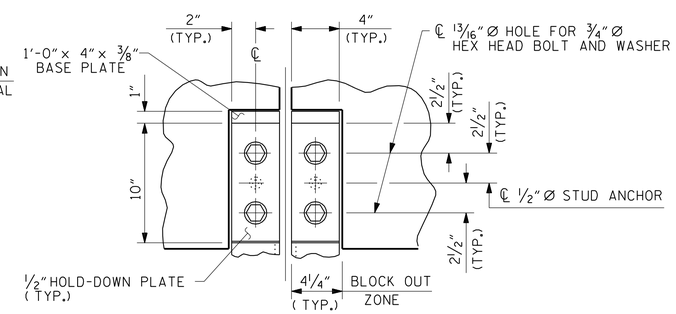

SECTION A - A

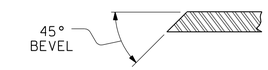

SECTION B - B

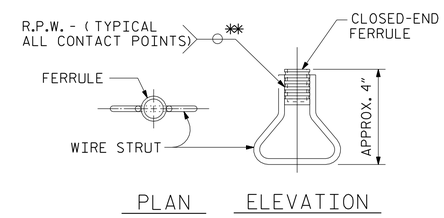

CONCRETE INSERT

** EACH WELDED ATTACHMENT OF WIRE TO FERRULE SHALL DEVELOP THE TENSILE STRENGTH OF THE WIRE.

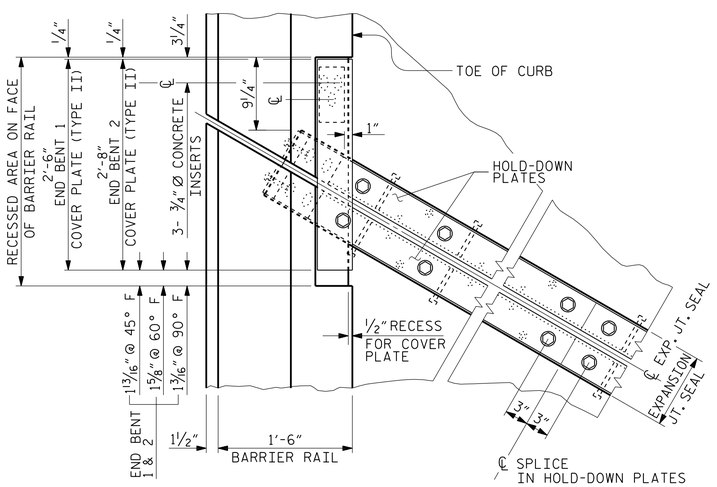

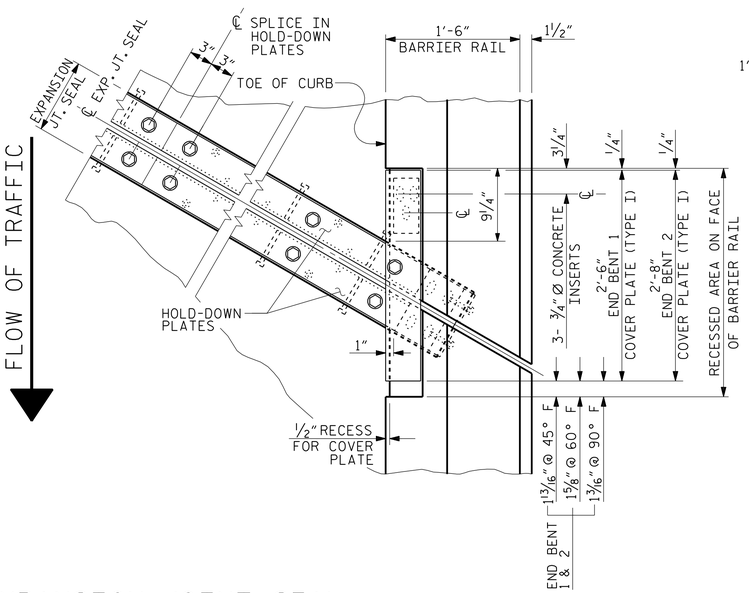

PLAN OF EXPANSION JOINT SEAL

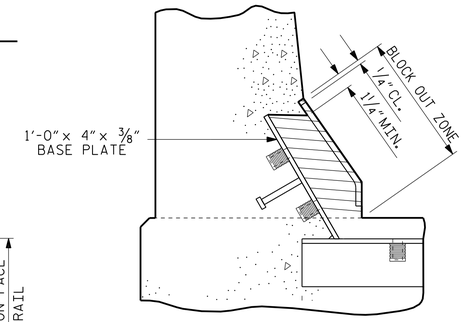

BLOCK OUT DETAIL

SEE " SECTION A - A " FOR OTHER DETAILS.

PROJECT NO. U-2579B

FORSYTH COUNTY

STATION: 17+10.00 -Y4RPA-

SHEET 2 OF 2

PLANS PREPARED BY:

MULKEY ENGINEERS & CONSULTANTS
PO BOX 33127
RALEIGH, N.C. 27636
(919) 851-1912
(919) 851-1918 (FAX)
WWW.MULKEYINC.COM
NC LICENSE NO. C-1031

THIS STANDARD DRAWING REVIEWED & ADOPTED FOR USE AT THE REFERENCED LOCATION BY THE UNDERSIGNED:

NORTH CAROLINA PROFESSIONAL SEAL 034352 ENGINEER THERON R. PETERSON

DocuSigned by: Theron R. Peterson 5/19/2014
6DC4171647CD40F...

DWG. NO. RPA-29

STATE OF NORTH CAROLINA
DEPARTMENT OF TRANSPORTATION
RALEIGH

STANDARD

EXPANSION JOINT SEAL DETAILS FOR BARRIER RAIL

REVISIONS						SHEET NO.
NO.	BY:	DATE:	NO.	BY:	DATE:	S-246
1			3			TOTAL SHEETS
2			4			707

STR #7 STD. NO. EJS2 SHT 2a

ASSEMBLED BY :	W. B. ALLEN	DATE :	9/13
CHECKED BY :	T. R. PETERSON	DATE :	10/13

DRAWN BY :	REK	9/87	REV. 10/1/11	MAA/GM
CHECKED BY :	CRK	10/87	REV. 7/12	MAA/GM
			REV. 6/13	MAA/GM

5/19/2014 8:17:33 AM R:\Structures\U-2579B_Ramp A\U-2579B_RPA_SD_JS_02.dgn