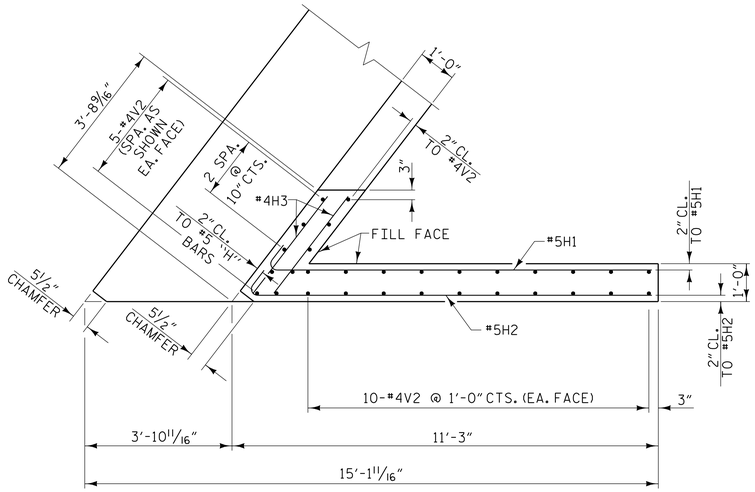

PLAN OF LEFT WING - W1

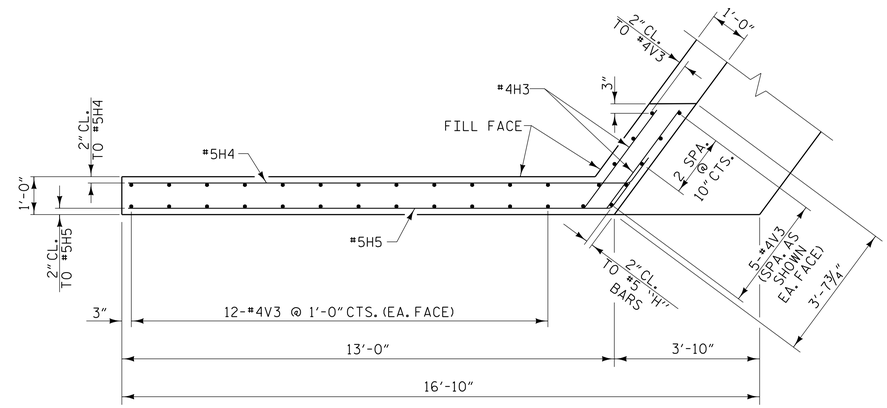

PLAN OF RIGHT WING - W2

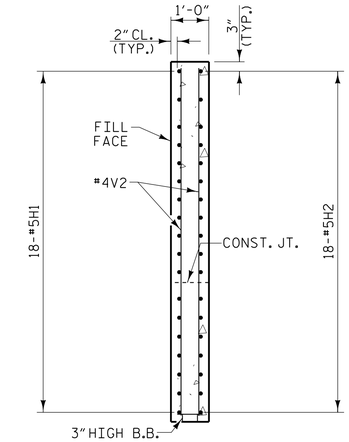

SECTION X-X

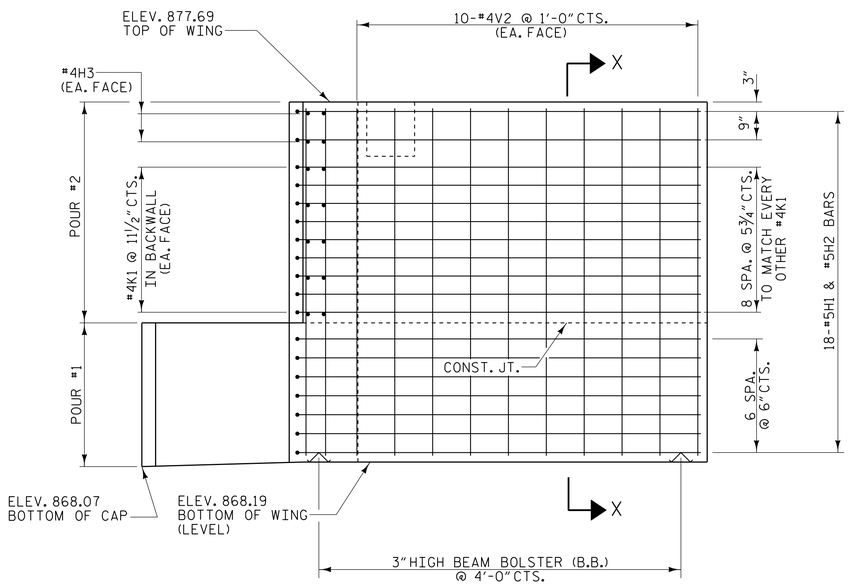

ELEVATION OF LEFT WING - W1

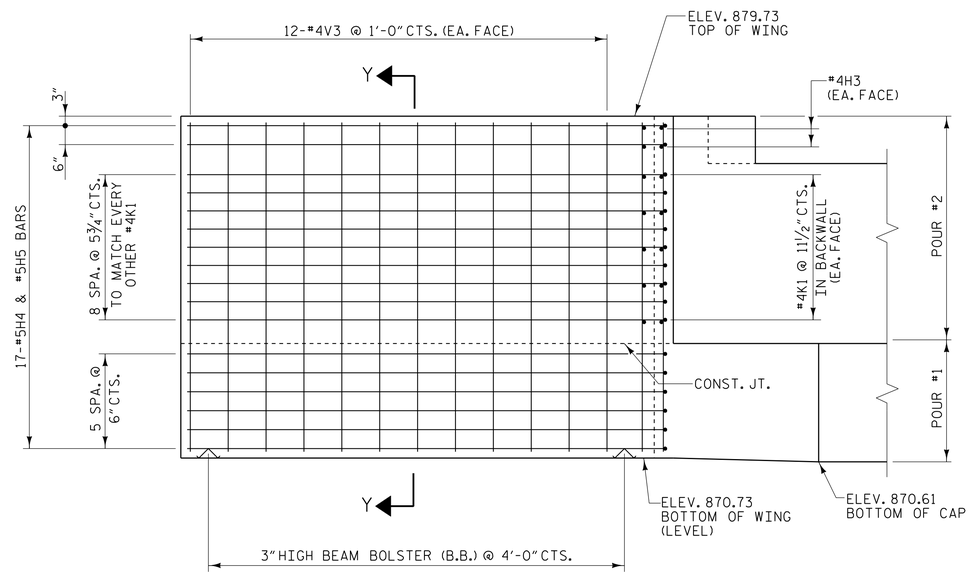

ELEVATION OF RIGHT WING - W2

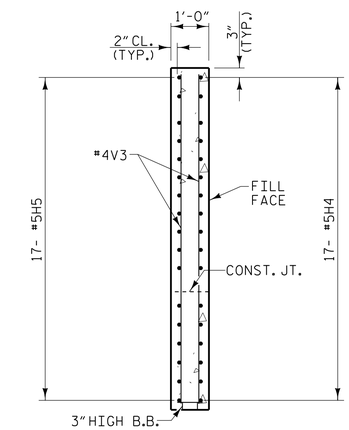

SECTION Y-Y

PROJECT NO. U-2579B

FORSYTH COUNTY

STATION: 17+10.00 -Y4RPA-

SHEET 2 OF 3

STATE OF NORTH CAROLINA
DEPARTMENT OF TRANSPORTATION
RALEIGH

SUBSTRUCTURE

END BENT #1

PLANS PREPARED BY:

MULKEY ENGINEERS & CONSULTANTS
PO Box 33127
Raleigh, N.C. 27636
(919) 851-1912
(919) 851-1918 (FAX)
WWW.MULKEYINC.COM
NC LICENSE NO. C-1021

NORTH CAROLINA PROFESSIONAL SEAL 034352 ENGINEER THERON R. PETERSON
5/19/2014
DocuSigned by: Theron R. Peterson
6DC417164 7CD40F...

DWG. NO. RPA-33

REVISIONS						SHEET NO.
NO.	BY:	DATE:	NO.	BY:	DATE:	S-250
1			3			TOTAL SHEETS
2			4			707

STR #7

DRAWN BY :	W. B. ALLEN	DATE :	10/13
CHECKED BY :	T. R. PETERSON	DATE :	11/13
DESIGN ENGINEER OF RECORD:	T. R. PETERSON	DATE :	4/23/14

5/19/2014 8:25:09 AM R:\Structures\U-2579B_Ramp A\U-2579B_RPA_SD_EL02.dgn