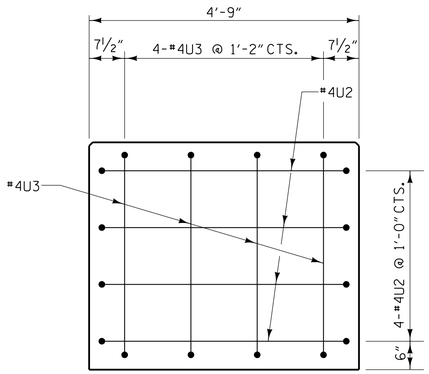

CAP END VIEW

(TYP. EACH END)

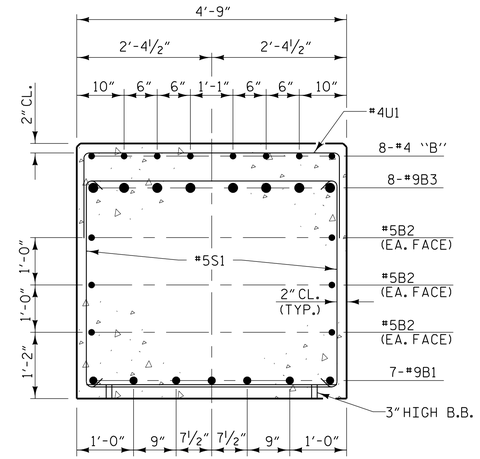

SECTION A-A

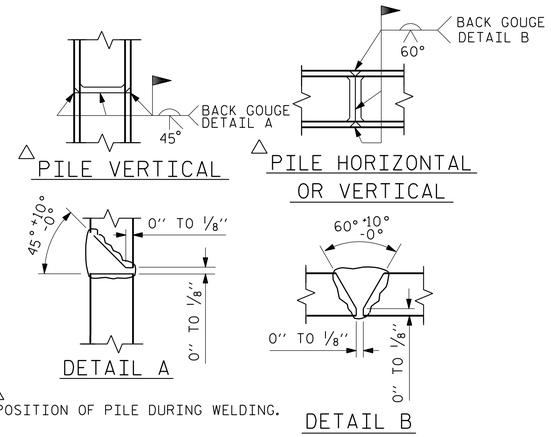

△ POSITION OF PILE DURING WELDING.

PILE SPLICE DETAILS

BAR TYPES

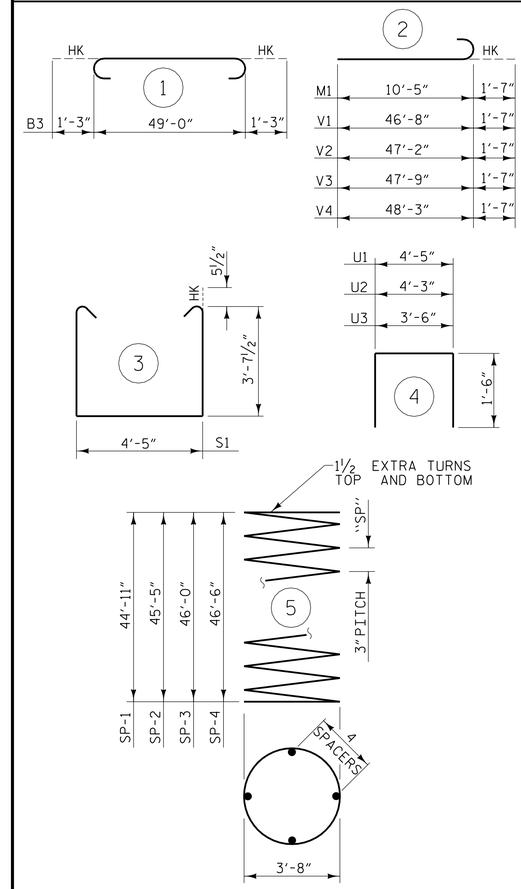

ALL BAR DIMENSIONS ARE OUT TO OUT

BILL OF MATERIAL

BENT #1

BAR	NO.	SIZE	TYPE	LENGTH	WEIGHT
B1	7	#9	STR	49'-0"	1166
B2	6	#5	STR	49'-2"	308
B3	8	#9	1	51'-6"	1401
B4	32	#4	STR	9'-3"	198
B5	8	#4	STR	4'-10"	26
M1	56	#11	2	12'-0"	3570
S1	65	#5	3	12'-7"	853
T1	184	#9	STR	11'-0"	6882
T2	96	#6	STR	11'-0"	1586
U1	66	#4	4	7'-5"	327
U2	8	#4	4	7'-3"	39
U3	8	#4	4	6'-6"	35
V1	14	#11	2	48'-3"	3589
V2	14	#11	2	48'-9"	3626
V3	14	#11	2	49'-4"	3670
V4	14	#11	2	49'-10"	3707
TOTAL REINFORCING STEEL					30983 lbs.

SPIRAL COLUMN REINFORCING STEEL (SP)					
SP-1	1	**	5	2084'-7"	1393
SP-2	1	**	5	2107'-5"	1408
SP-3	1	**	5	2130'-2"	1423
SP-4	1	**	5	2152'-11"	1438
TOTAL SPIRAL COLUMN REINFORCING STEEL (SP)					5662 lbs.

CLASS "A" CONCRETE - CU. YARDS

POUR 1 - FOOTINGS	78.4 CU. YDS.
POUR 2 - COLUMNS	84.5 CU. YDS.
POUR 3 - CAP	37.7 CU. YDS.
TOTAL CLASS "A" CONCRETE	200.6 CU. YDS.

HP12X53 STEEL PILES
36 PILES REQUIRED - LIN. FEET 1440

** THE SP-1, SP-2, SP-3 AND SP-4 SPIRAL REINFORCING STEEL SHALL BE W20 OR D-20 COLD DRAWN WIRE OR #4 PLAIN OR DEFORMED BAR.

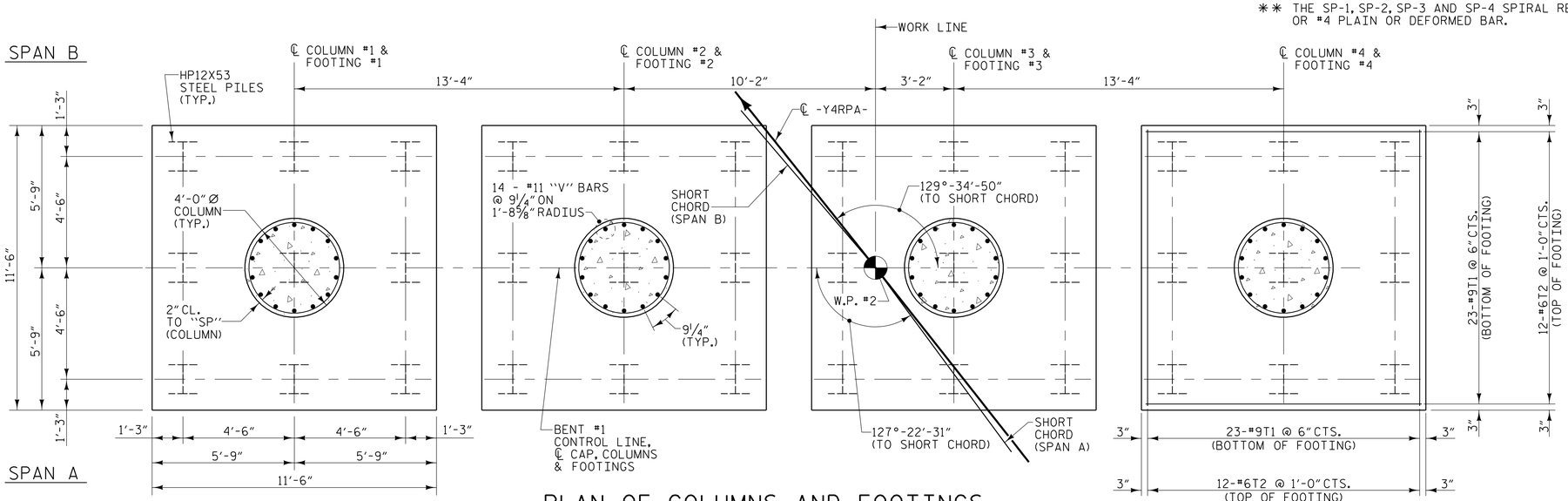

PLAN OF COLUMNS AND FOOTINGS

(DIMENSIONS AND REINFORCING STEEL ARE TYPICAL FOR EACH COLUMN AND FOOTING)

PLANS PREPARED BY:

MULKEY ENGINEERS & CONSULTANTS
PO Box 33127
Raleigh, N.C. 27636
(919) 851-1912
(919) 851-1918 (FAX)
WWW.MULKEYINC.COM
NC LICENSE NO. C-1051

PROJECT NO. U-2579B
FORSYTH COUNTY
STATION: 17+10.00 -Y4RPA-

SHEET 2 OF 2

STATE OF NORTH CAROLINA
DEPARTMENT OF TRANSPORTATION
RALEIGH

SUBSTRUCTURE

BENT #1

NORTH CAROLINA PROFESSIONAL SEAL 034352 ENGINEER TIERRE R. PETERSON
5/19/2014
DocuSigned by: Tierre R. Peterson
6DC417164 7CD40F

DRAWN BY : W. B. ALLEN DATE : 12/13
CHECKED BY : T. R. PETERSON DATE : 2/14
DESIGN ENGINEER OF RECORD: T. R. PETERSON DATE : 4/23/14

REVISIONS						SHEET NO.
NO.	BY:	DATE:	NO.	BY:	DATE:	S-253
1			3			TOTAL SHEETS
2			4			707

DWG. NO. RPA-36

STR #7

5/19/2014 8:27:20 AM R:\Structures\U-2579B_Ramp A\U-2579B_RPA_SD_B1_02.dgn