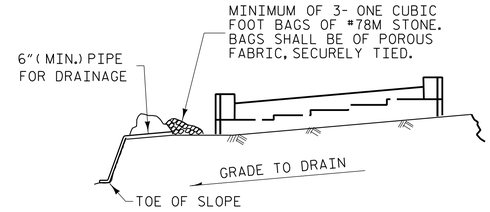

BAGGED STONE AND PIPE SHALL BE PLACED IMMEDIATELY AFTER COMPLETION OF END BENT EXCAVATION. PIPE MAY BE EITHER CONCRETE, CORRUGATED STEEL, CORRUGATED ALUMINUM ALLOY, OR CORRUGATED PLASTIC. PERFORATED PIPE WILL NOT BE ALLOWED.

BAGGED STONE SHALL REMAIN IN PLACE UNTIL THE ENGINEER DIRECTS THAT IT BE REMOVED. THE CONTRACTOR SHALL REMOVE AND DISPOSE OF SILT ACCUMULATIONS AT BAGGED STONE WHEN SO DIRECTED BY THE ENGINEER. BAGS SHALL BE REMOVED AND REPLACED WHENEVER THE ENGINEER DETERMINES THAT THEY HAVE DETERIORATED AND LOST THEIR EFFECTIVENESS.

NO SEPARATE PAYMENT WILL BE MADE FOR THIS WORK AND THE ENTIRE COST OF THIS WORK SHALL BE INCLUDED IN THE UNIT CONTRACT PRICE BID FOR THE SEVERAL PAY ITEMS.

TEMPORARY DRAINAGE AT END BENT

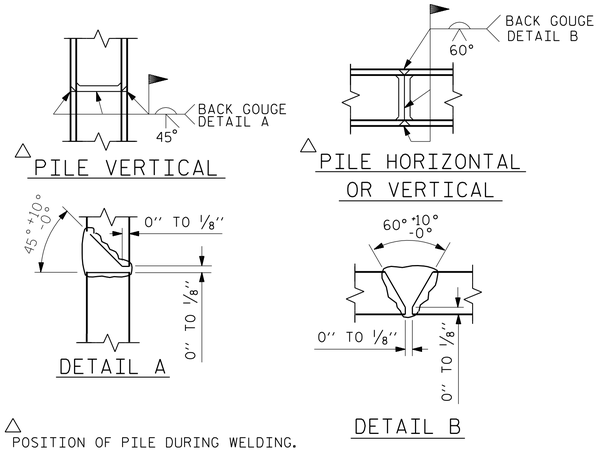

△ POSITION OF PILE DURING WELDING.

PILE SPLICE DETAILS

BAR TYPES

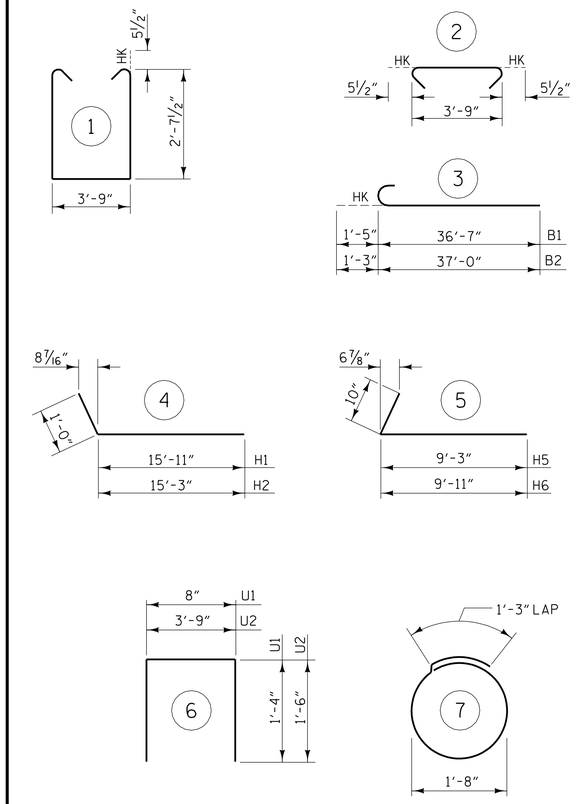

ALL BAR DIMENSIONS ARE OUT TO OUT

BILL OF MATERIAL

END BENT #2

BAR	NO.	SIZE	TYPE	LENGTH	WEIGHT
B1	10	#10	3	38'-0"	1635
B2	12	#9	3	38'-3"	1561
B3	8	#5	STR	34'-2"	285
B4	12	#4	STR	23'-5"	188
B5	16	#4	STR	3'-9"	40
B6	6	#4	STR	14'-0"	56
B7	24	#4	STR	2'-8"	43
H1	20	#6	4	16'-11"	508
H2	20	#6	4	16'-3"	488
H3	6	#4	STR	3'-8"	15
H4	4	#4	STR	3'-6"	9
H5	17	#5	5	10'-1"	179
H6	17	#5	5	10'-9"	191
K1	30	#4	STR	23'-5"	469
S1	81	#5	1	9'-11"	838
S2	81	#5	2	4'-8"	394
S3	20	#4	7	6'-6"	87
U1	57	#4	6	3'-4"	127
U2	33	#4	6	6'-9"	149
V1	114	#5	STR	7'-9"	921
V2	40	#4	STR	9'-5"	252
V3	28	#4	STR	8'-11"	167

TOTAL REINFORCING STEEL 8602 lbs.

CLASS "A" CONCRETE - CU. YARDS
POUR 1 - CAP, COLLARS & LOWER WINGS 37.1 cu. yds.
POUR 2 - UPPER WINGS & BACKWALL 17.4 cu. yds.
TOTAL 54.5 cu. yds.

HP12X53 STEEL PILES
10 PILES REQUIRED - LIN. FEET 700

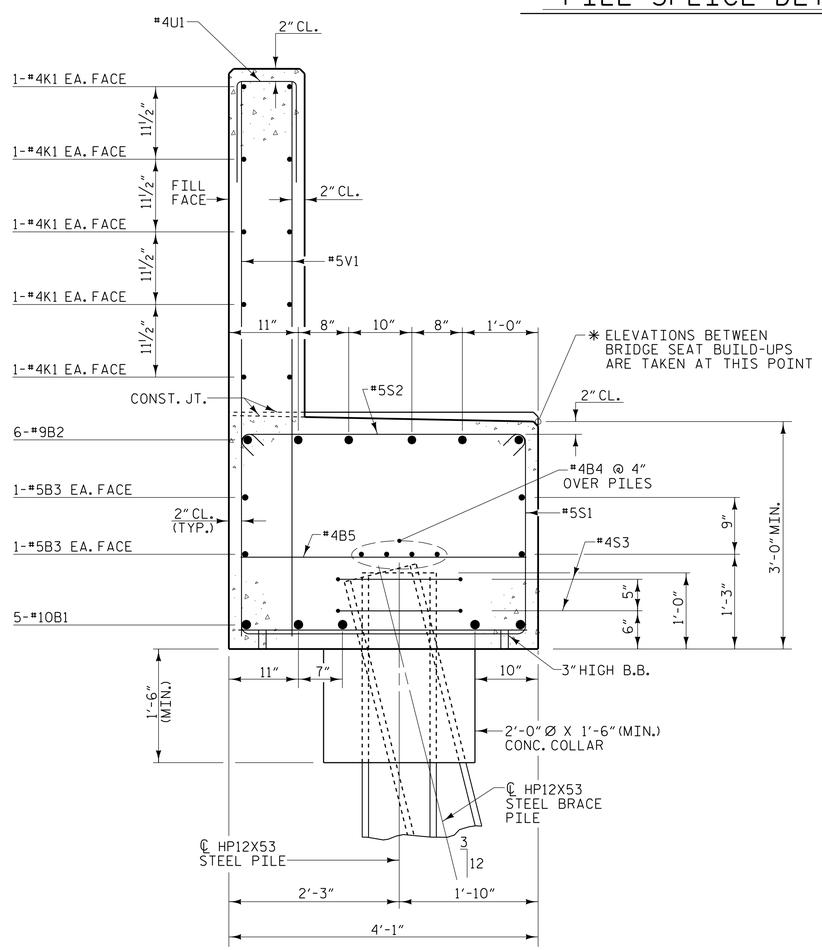

SECTION A-A

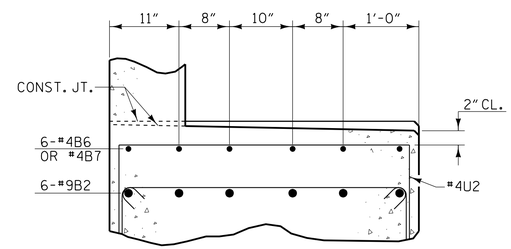

SECTION B-B

PROJECT NO. U-2579B
FORSYTH COUNTY
STATION: 17+10.00 -Y4RPA-

SHEET 3 OF 3

STATE OF NORTH CAROLINA
DEPARTMENT OF TRANSPORTATION
RALEIGH

SUBSTRUCTURE

END BENT #2

PLANS PREPARED BY:
MULKEY ENGINEERS & CONSULTANTS
PO Box 33127
RALEIGH, N.C. 27636
(919) 851-1912
(919) 851-1918 (FAX)
WWW.MULKEYINC.COM
NC LICENSE NO. C-1021

NORTH CAROLINA PROFESSIONAL SEAL 034352 ENGINEER TERRY R. PETERSON
DocuSigned by: Terry R. Peterson 6DC4171647CD40F...
5/19/2014

DWG. NO. RPA-45

REVISIONS							
NO.	BY:	DATE:	NO.	BY:	DATE:	SHEET NO.	
1			3			S-262	
2			4			TOTAL SHEETS	
						707	

STR #7

DRAWN BY :	W. B. ALLEN	DATE :	10/13
CHECKED BY :	T. R. PETERSON	DATE :	11/13
DESIGN ENGINEER OF RECORD:	T. R. PETERSON	DATE :	4/23/14

5/9/2014 8:33:22 AM R:\Structures\U-2579B Ramp A\U-2579B_RPA_SD_E2_03.dgn