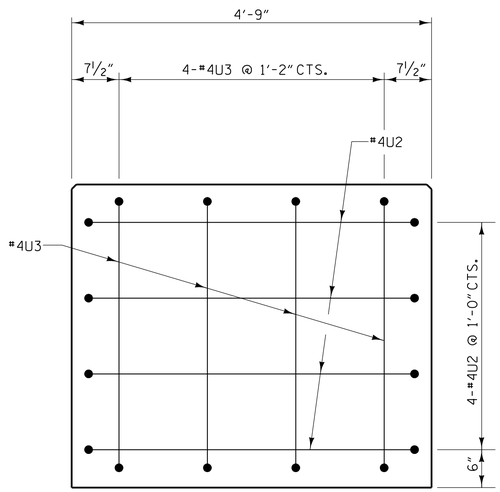

CAP END VIEW

(TYP. EACH END)

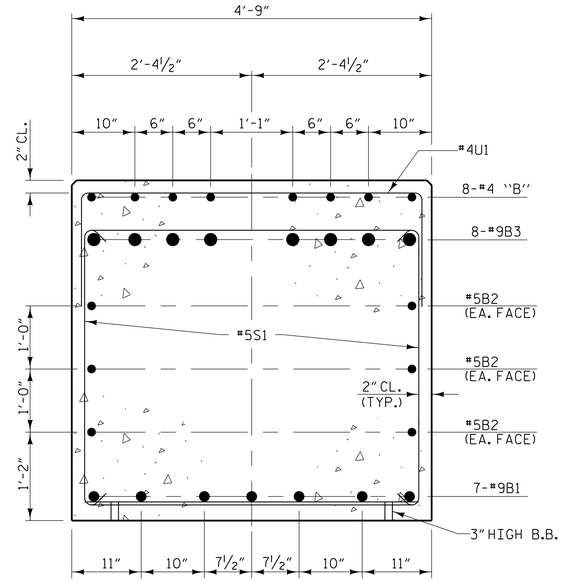

SECTION A-A

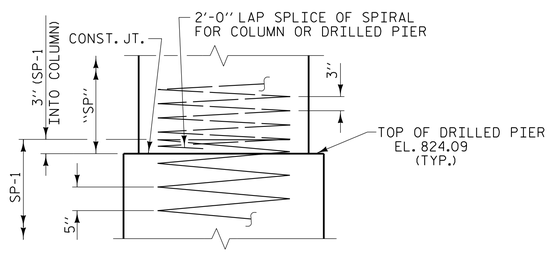

CONSTRUCTION JOINT DETAIL

BAR TYPES

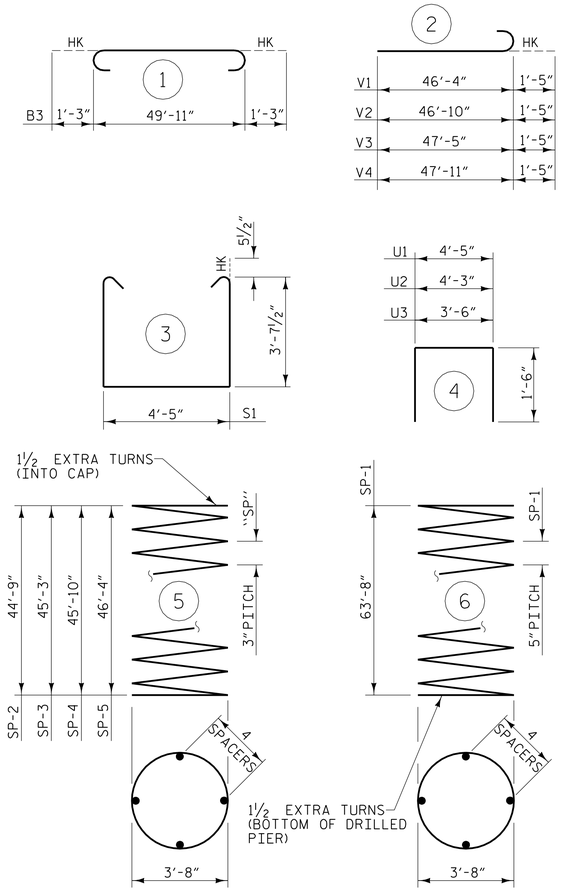

ALL BAR DIMENSIONS ARE OUT TO OUT

BILL OF MATERIAL

BENT #2

BAR	NO.	SIZE	TYPE	LENGTH	WEIGHT
B1	7	#9	STR	49'-11"	1188
B2	6	#5	STR	50'-1"	313
B3	8	#9	1	52'-5"	1426
B4	32	#4	STR	9'-3"	198
B5	8	#4	STR	4'-10"	26
M1	144	#11	STR	42'-7"	32579
S1	69	#5	3	12'-7"	906
U1	66	#4	4	7'-5"	327
U2	8	#4	4	7'-3"	39
U3	8	#4	4	6'-6"	35
V1	18	#10	2	47'-9"	3698
V2	18	#10	2	48'-3"	3737
V3	18	#10	2	48'-10"	3782
V4	18	#10	2	49'-4"	3821
TOTAL REINFORCING STEEL					52075 lbs.
SPIRAL COLUMN REINFORCING STEEL (SP)					
SP-1	4	**	6	1761'-4"	7348
SP-2	1	***	5	2061'-10"	1377
SP-3	1	***	5	2084'-7"	1393
SP-4	1	***	5	2107'-5"	1408
SP-5	1	***	5	2130'-2"	1423
TOTAL SPIRAL COLUMN REINFORCING STEEL					12949 lbs.

CLASS "A" CONCRETE - CU. YARDS

POUR 2 - COLUMNS 84.1 CU. YDS.
POUR 3 - CAP 38.4 CU. YDS.

TOTAL CLASS "A" CONCRETE 122.5 CU. YDS.

4'-6" Ø DRILLED PIERS

DRILLED PIER CONCRETE
POUR 1 (DRILLED PIERS) 151.2 CU. YDS.

4'-6" Ø DRILLED PIERS IN SOIL: 234.7 LIN. FT.

4'-6" Ø DRILLED PIERS NOT IN SOIL: 22.0 LIN. FT.

4'-6" Ø PERMANENT STEEL CASING 138.4 LIN. FT.

▲ CSL TUBES 1050.7 LIN. FT.

*** THE SP-2, SP-3, SP-4 AND SP-5 SPIRAL REINFORCING STEEL SHALL BE W20 OR D-20 COLD DRAWN WIRE OR #4 PLAIN OR DEFORMED BAR.

** THE SP-1 SPIRAL REINFORCING STEEL SHALL BE W31 OR D-31 COLD DRAWN WIRE OR #5 PLAIN OR DEFORMED BAR.

▲ NO SEPARATE PAYMENT WILL BE MADE FOR CSL TUBES. CSL TUBES WILL BE INCLUDED IN THE UNIT BID PRICE FOR DRILLED PIERS.

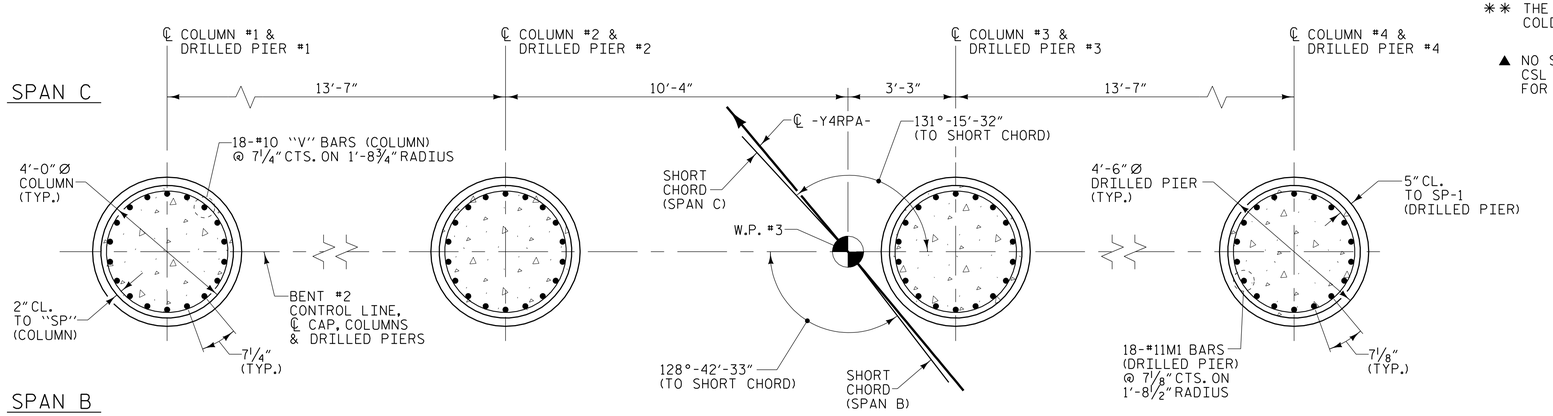

PLAN OF COLUMNS AND DRILLED PIERS

(DIMENSIONS AND REINFORCING STEEL ARE TYPICAL FOR EACH COLUMN AND DRILLED PIER)

PROJECT NO. U-2579B
FORSYTH COUNTY
STATION: 17+10.00 -Y4RPA-

SHEET 2 OF 2

STATE OF NORTH CAROLINA
DEPARTMENT OF TRANSPORTATION
RALEIGH

SUBSTRUCTURE
BENT #2

DRAWN BY :	W. B. ALLEN	DATE :	12/13
CHECKED BY :	T. R. PETERSON	DATE :	2/14
DESIGN ENGINEER OF RECORD:	T. R. PETERSON	DATE :	4/23/14

PLANS PREPARED BY:
MULKEY ENGINEERS & CONSULTANTS
PO Box 33127
Raleigh, N.C. 27636
(919) 851-1912
(919) 851-1918 (FAX)
WWW.MULKEYINC.COM
NC LICENSE NO. C-1021

NORTH CAROLINA PROFESSIONAL SEAL 034352 ENGINEER THERON R. PETERSON
5/19/2014
DocuSigned by: Theron R. Peterson
6DC417164 7CD40F

DWG. NO. RPA-38

REVISIONS								
NO.	BY:	DATE:	NO.	BY:	DATE:			
1			3					
2			4					

SHEET NO. S-255
TOTAL SHEETS 707

STR #7

5/19/2004 8:28:33 AM R:\Structures\U-2579B Ramp A\U-2579B_RPA_SD.B2.02.dgn