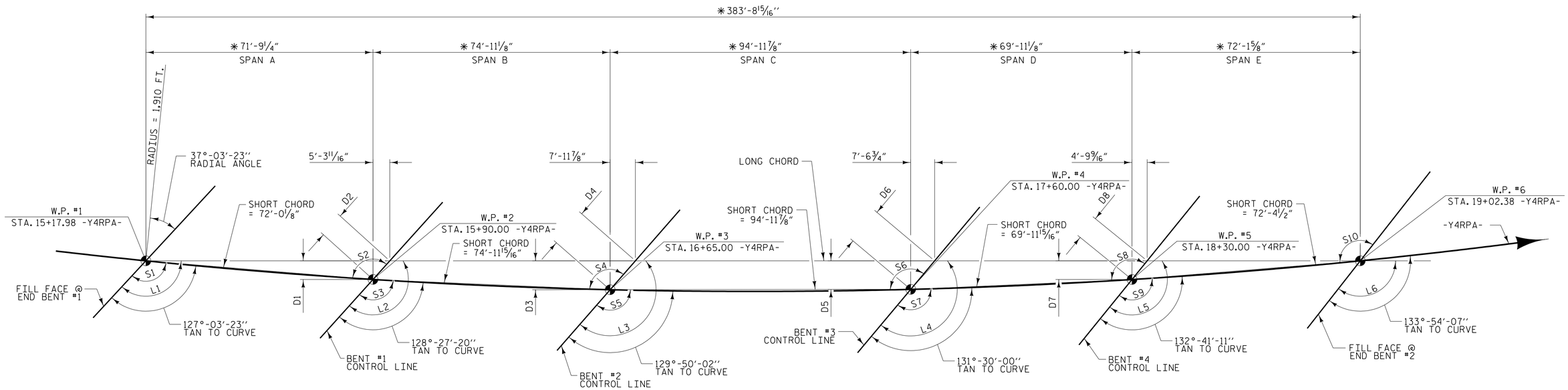

ANGLES				OFFSETS	
LONG CHORD		SHORT CHORD			
L1	132°-49'-19"	S1	128°-08'-12"	D1	5'-10 9/16"
L2	132°-03'-38"	S2	127°-22'-31"	D2	7'-11 1/16"
L3	131°-11'-22"	S3	129°-34'-50"	D3	9'-1 1/2"
L4	130°-00'-20"	S4	128°-42'-33"	D4	12'-1 9/16"
L5	129°-05'-32"	S5	131°-15'-32"	D5	9'-0 1/8"
L6	128°-08'-11"	S6	130°-04'-30"	D6	11'-9 3/16"
		S7	132°-32'-59"	D7	5'-10 7/8"
		S8	131°-38'-12"	D8	7'-7 5/16"
		S9	133°-46'-20"		
		S10	132°-48'-59"		

LONG CHORD LAYOUT

✱ ALONG LONG CHORD

PROJECT NO. U-2579B

FORSYTH COUNTY

STATION: 17+10.00 -Y4RPA-

SHEET 3 OF 5

STATE OF NORTH CAROLINA
DEPARTMENT OF TRANSPORTATION
RALEIGH

GENERAL DRAWING

FOR BRIDGE ON -Y4RPA- OVER
HARMON MILL (SMITH) CREEK
BETWEEN
US 158 AND US 421/I-40 BUS.

PLANS PREPARED BY:

MULKEY
ENGINEERS & CONSULTANTS
PO Box 33127
Raleigh, N.C. 27636
(919) 851-1912
(919) 851-1918 (FAX)
WWW.MULKEYINC.COM
NC LICENSE NO. C-1021

NORTH CAROLINA PROFESSIONAL SEAL 034352 ENGINEER TERRY R. PETERSON
5/19/2014
DocuSigned by: Terry R. Peterson
6DC417171647C40F...

DWG. NO. RPA-3

REVISIONS						SHEET NO.
NO.	BY:	DATE:	NO.	BY:	DATE:	S-220
1			3			TOTAL SHEETS
2			4			707

STR #7

DRAWN BY :	Z. H. BROWN	DATE :	2/13
CHECKED BY :	T. R. PETERSON	DATE :	2/13
DESIGN ENGINEER OF RECORD:	T. R. PETERSON	DATE :	4/23/14

5/19/2014 7:58:10 AM R:\Structures\U-2579B Ramp A\U-2579B_RPA_SD_GD_02.dgn