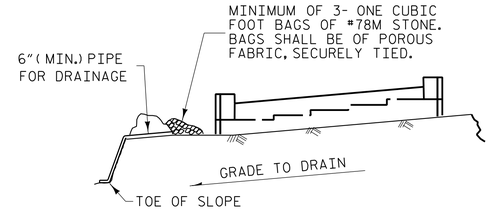

BAGGED STONE AND PIPE SHALL BE PLACED IMMEDIATELY AFTER COMPLETION OF END BENT EXCAVATION. PIPE MAY BE EITHER CONCRETE, CORRUGATED STEEL, CORRUGATED ALUMINUM ALLOY, OR CORRUGATED PLASTIC. PERFORATED PIPE WILL NOT BE ALLOWED.

BAGGED STONE SHALL REMAIN IN PLACE UNTIL THE ENGINEER DIRECTS THAT IT BE REMOVED. THE CONTRACTOR SHALL REMOVE AND DISPOSE OF SILT ACCUMULATIONS AT BAGGED STONE WHEN SO DIRECTED BY THE ENGINEER. BAGS SHALL BE REMOVED AND REPLACED WHENEVER THE ENGINEER DETERMINES THAT THEY HAVE DETERIORATED AND LOST THEIR EFFECTIVENESS.

NO SEPARATE PAYMENT WILL BE MADE FOR THIS WORK AND THE ENTIRE COST OF THIS WORK SHALL BE INCLUDED IN THE UNIT CONTRACT PRICE BID FOR THE SEVERAL PAY ITEMS.

TEMPORARY DRAINAGE AT END BENT

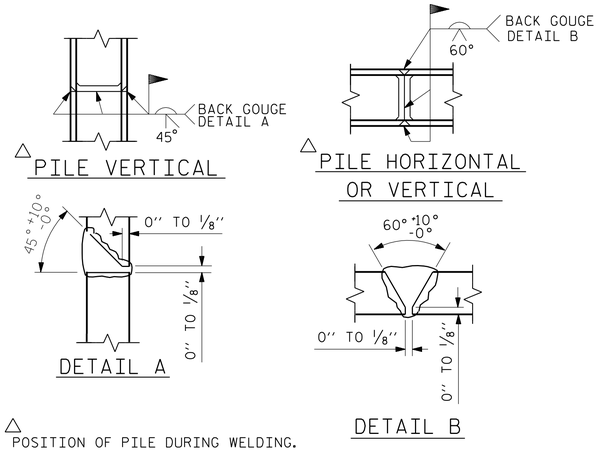

△ POSITION OF PILE DURING WELDING.

PILE SPLICE DETAILS

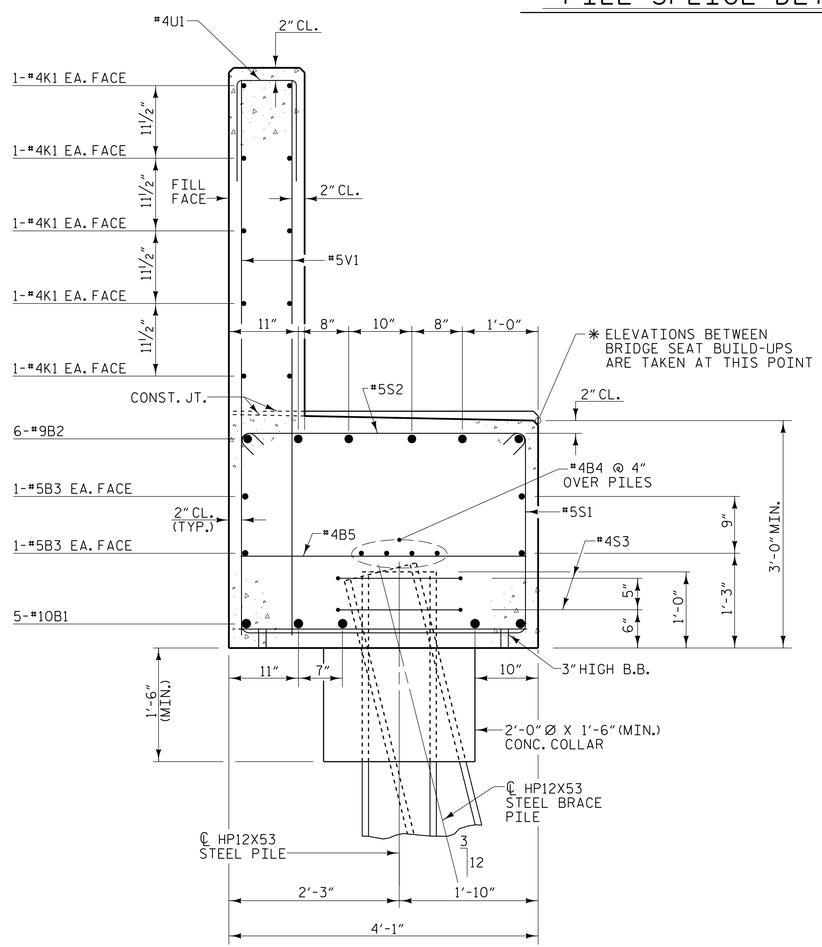

SECTION A-A

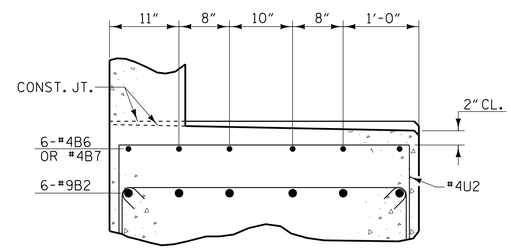

SECTION B-B

BAR TYPES

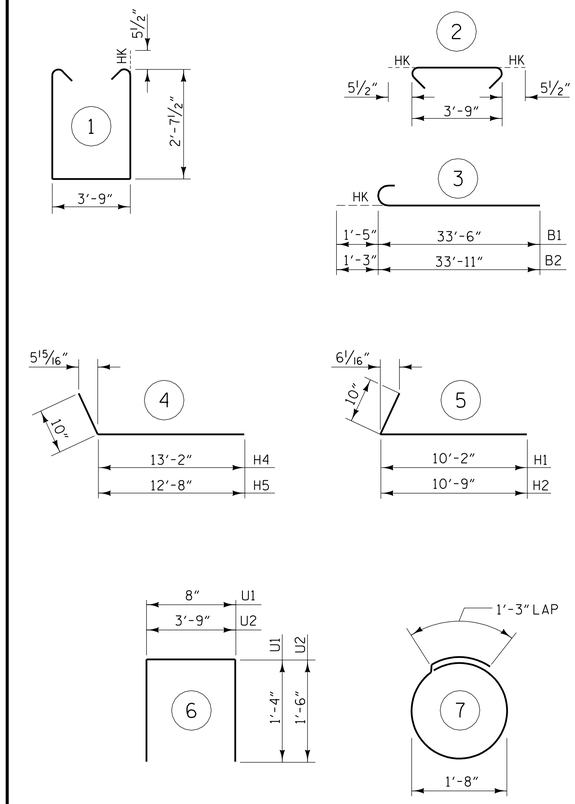

ALL BAR DIMENSIONS ARE OUT TO OUT

BILL OF MATERIAL

END BENT #1

BAR	NO.	SIZE	TYPE	LENGTH	WEIGHT
B1	10	#10	3	34'-11"	1502
B2	12	#9	3	35'-2"	1435
B3	8	#5	STR	31'-1"	259
B4	12	#4	STR	21'-4"	171
B5	14	#4	STR	3'-9"	35
B6	6	#4	STR	14'-2"	57
B7	24	#4	STR	2'-9"	44
H1	18	#5	5	11'-0"	207
H2	18	#5	5	11'-7"	217
H3	8	#4	STR	3'-2"	17
H4	17	#5	4	14'-0"	248
H5	17	#5	4	13'-6"	239
K1	30	#4	STR	21'-4"	428
S1	64	#5	1	9'-11"	662
S2	64	#5	2	4'-8"	312
S3	18	#4	7	6'-6"	78
U1	52	#4	6	3'-4"	116
U2	26	#4	6	6'-9"	117
V1	104	#5	STR	7'-7"	823
V2	30	#4	STR	9'-2"	184
V3	34	#4	STR	8'-8"	197

TOTAL REINFORCING STEEL	7348 lbs.
CLASS "A" CONCRETE - CU. YARDS	
POUR 1 - CAP, COLLARS & LOWER WINGS	34.0 cu. yds.
POUR 2 - UPPER WINGS & BACKWALL	15.3 cu. yds.
TOTAL	49.3 cu. yds.
HP12X53 STEEL PILES	
9 PILES REQUIRED - LIN. FEET	790

PROJECT NO. U-2579B

FORSYTH COUNTY

STATION: 17+10.00 -Y4RPA-

SHEET 3 OF 3

STATE OF NORTH CAROLINA
DEPARTMENT OF TRANSPORTATION
RALEIGH

SUBSTRUCTURE

END BENT #1

PLANS PREPARED BY:
MULKEY ENGINEERS & CONSULTANTS
PO Box 33127
RALEIGH, N.C. 27636
(919) 851-1912
(919) 851-1918 (FAX)
WWW.MULKEYINC.COM
NC LICENSE NO. C-1021

NORTH CAROLINA PROFESSIONAL SEAL 034352 ENGINEER TERRY R. PETERSON
DocuSigned by: Terry R. Peterson 5/19/2014
6DC417164 7CD40F...

DWG. NO. RPA-34

REVISIONS							
NO.	BY:	DATE:	NO.	BY:	DATE:	SHEET NO.	
1			3			S-251	
2			4			TOTAL SHEETS	
						707	

STR #7

DRAWN BY :	W. B. ALLEN	DATE :	10/13
CHECKED BY :	T. R. PETERSON	DATE :	11/13
DESIGN ENGINEER OF RECORD:	T. R. PETERSON	DATE :	4/23/14

5/19/2014 8:25:44 AM R:\Structures\U-2579B_Ramp A\U-2579B_RPA_SD_E1_03.dgn