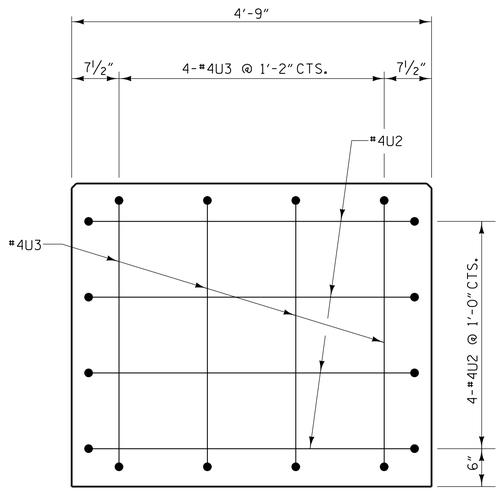

CAP END VIEW

(TYP. EACH END)

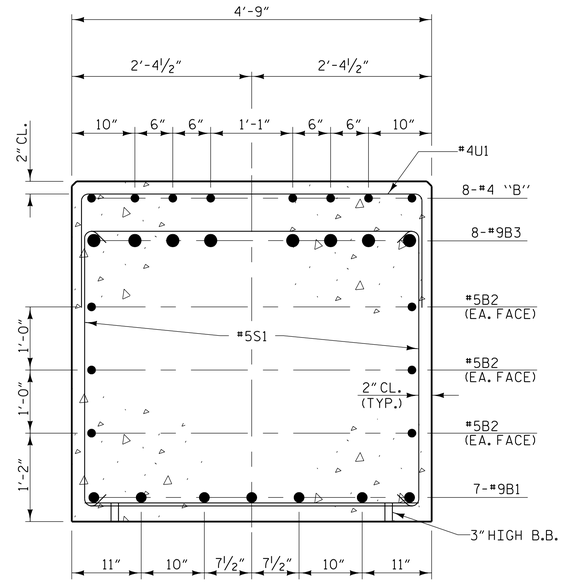

SECTION A-A

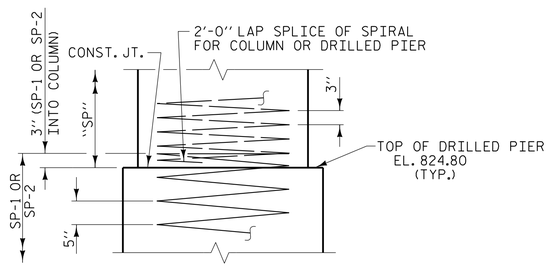

CONSTRUCTION JOINT DETAIL

BAR TYPES

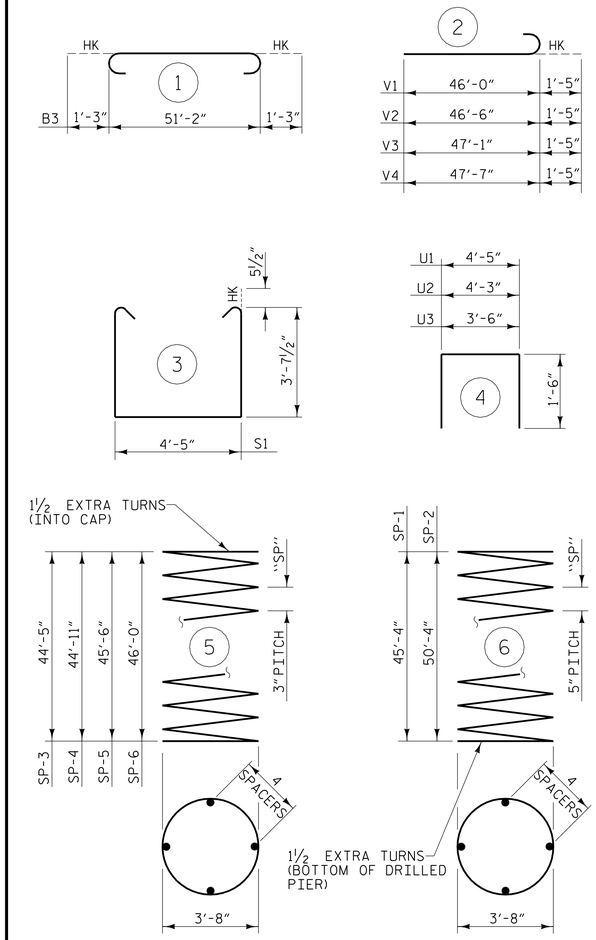

ALL BAR DIMENSIONS ARE OUT TO OUT

BILL OF MATERIAL

BENT #3

BAR	NO.	SIZE	TYPE	LENGTH	WEIGHT
B1	7	#9	STR	51'-2"	1218
B2	6	#5	STR	51'-4"	321
B3	8	#9	1	53'-8"	1460
B4	32	#4	STR	9'-3"	198
B5	8	#4	STR	4'-8"	25
M1	36	#11	STR	56'-2"	10743
M2	72	#11	STR	35'-10"	13708
S1	74	#5	3	12'-7"	971
U1	66	#4	4	7'-5"	327
U2	8	#4	4	7'-3"	39
U3	8	#4	4	6'-6"	35
V1	18	#10	2	47'-5"	3673
V2	18	#10	2	47'-11"	3711
V3	18	#10	2	48'-6"	3757
V4	18	#10	2	49'-0"	3795
TOTAL REINFORCING STEEL					43981 lbs.
SPIRAL COLUMN REINFORCING STEEL (SP)					
SP-1	2	**	6	1261'-4"	2631
SP-2	2	**	6	1397'-9"	2916
SP-3	1	***	5	2050'-5"	1370
SP-4	1	***	5	2073'-2"	1385
SP-5	1	***	5	2096'-0"	1400
SP-6	1	***	5	2118'-9"	1415
TOTAL SPIRAL COLUMN REINFORCING STEEL					11117 lbs.

CLASS "A" CONCRETE - CU. YARDS

POUR 2 - COLUMNS 83.5 CU. YDS.
POUR 3 - CAP 39.3 CU. YDS.

TOTAL CLASS "A" CONCRETE 122.8 CU. YDS.

4'-6" Ø DRILLED PIERS

DRILLED PIER CONCRETE
POUR 1 (DRILLED PIERS) 113.9 CU. YDS.

4'-6" Ø DRILLED PIERS IN SOIL: 148.3 LIN. FT.

4'-6" Ø DRILLED PIERS NOT IN SOIL: 45.0 LIN. FT.

4'-6" Ø PERMANENT STEEL CASING 103.2 LIN. FT.

▲ CSL TUBES 797.3 LIN. FT.

*** THE SP-3, SP-4, SP-5 AND SP-6 SPIRAL REINFORCING STEEL SHALL BE W20 OR D-20 COLD DRAWN WIRE OR #4 PLAIN OR DEFORMED BAR.

** THE SP-1 & SP-2 SPIRAL REINFORCING STEEL SHALL BE W31 OR D-31 COLD DRAWN WIRE OR #5 PLAIN OR DEFORMED BAR.

▲ NO SEPARATE PAYMENT WILL BE MADE FOR CSL TUBES. CSL TUBES WILL BE INCLUDED IN THE UNIT BID PRICE FOR DRILLED PIERS.

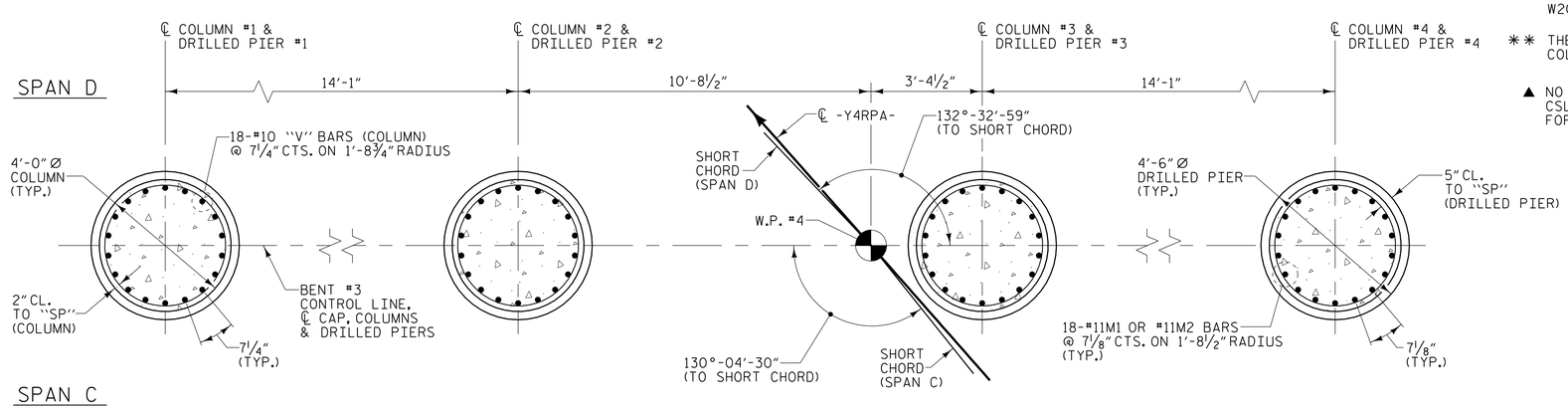

PLAN OF COLUMNS AND DRILLED PIERS

(DIMENSIONS AND REINFORCING STEEL ARE TYPICAL FOR EACH COLUMN AND DRILLED PIER)

PROJECT NO. U-2579B
FORSYTH COUNTY
STATION: 17+10.00 -Y4RPA-

SHEET 2 OF 2

STATE OF NORTH CAROLINA
DEPARTMENT OF TRANSPORTATION
RALEIGH

SUBSTRUCTURE
BENT #3

PLANS PREPARED BY:
MULKEY ENGINEERS & CONSULTANTS
PO Box 33127
Raleigh, N.C. 27636
(919) 851-1912
(919) 851-1918 (FAX)
WWW.MULKEYINC.COM
NC LICENSE NO. C-1051

NORTH CAROLINA PROFESSIONAL SEAL 034352 ENGINEER TERRE R. PETERSON
5/19/2014
DocuSigned by: Terre R. Peterson
6DC417164 7CD40F

DWG. NO. RPA-40

REVISIONS						SHEET NO.
NO.	BY:	DATE:	NO.	BY:	DATE:	S-257
1			3			TOTAL SHEETS
2			4			707

STR #7

DRAWN BY :	W. B. ALLEN	DATE :	12/13
CHECKED BY :	T. R. PETERSON	DATE :	2/14
DESIGN ENGINEER OF RECORD:	T. R. PETERSON	DATE :	4/23/14

5/9/2014 8:29:48 AM R:\Structures\U-2579B Ramp A\U-2579B_RPA_SD_B3_02.dgn