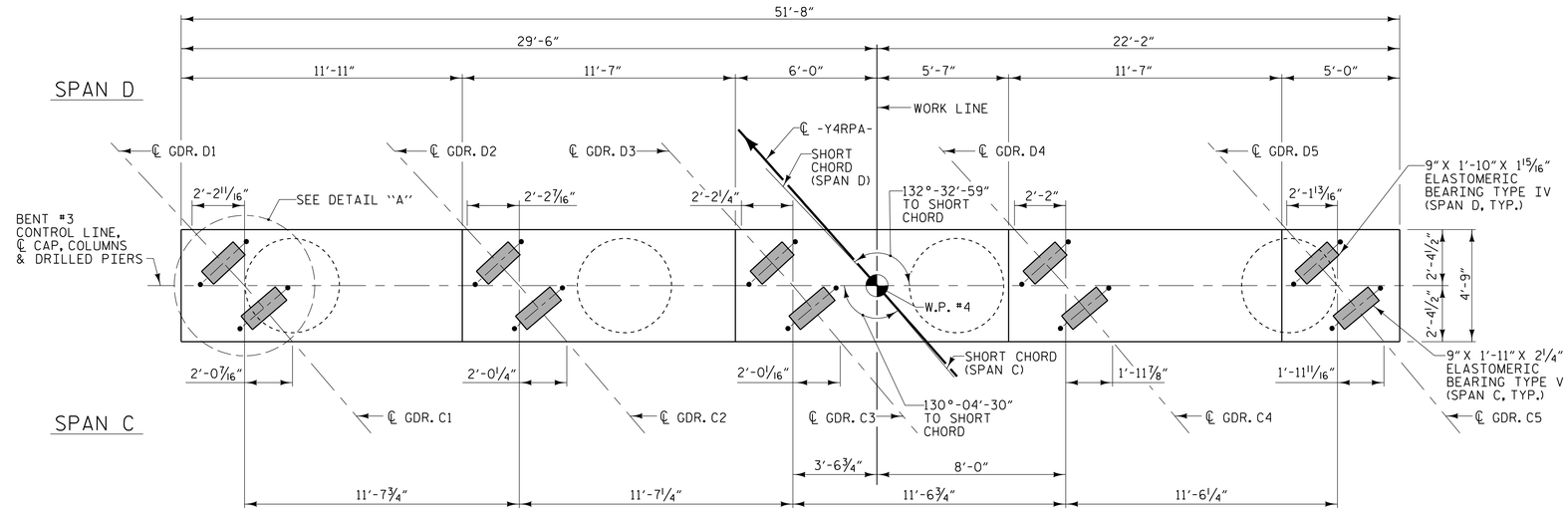

PLAN

NOTES

STIRRUPS AND "U" BARS IN CAP MAY BE SHIFTED AS NECESSARY TO CLEAR ANCHOR BOLTS.

HOOKS ON "V" BARS MAY BE TURNED AS NECESSARY FOR PLACING REINFORCING STEEL.

ALL STEEL IN THE DRILLED PIERS IS INCLUDED IN THE PAY ITEMS FOR "REINFORCING STEEL" AND "SPIRAL COLUMN REINFORCING STEEL."

THE LOCATION OF THE CONSTRUCTION JOINT IN THE DRILLED PIERS IS BASED ON AN APPROXIMATE GROUND LINE ELEVATION. IF THE CONSTRUCTION JOINT IS ABOVE THE ACTUAL GROUND LINE ELEVATION, THE CONTRACTOR SHALL PLACE THE CONSTRUCTION JOINT 1 FOOT BELOW THE GROUND LINE.

THE CONTRACTOR'S ATTENTION IS CALLED TO THE FACT THAT THE LONGITUDINAL REINFORCEMENT FOR THE DRILLED PIERS IS DETAILED WITH 3 FEET OF EXTRA LENGTH.

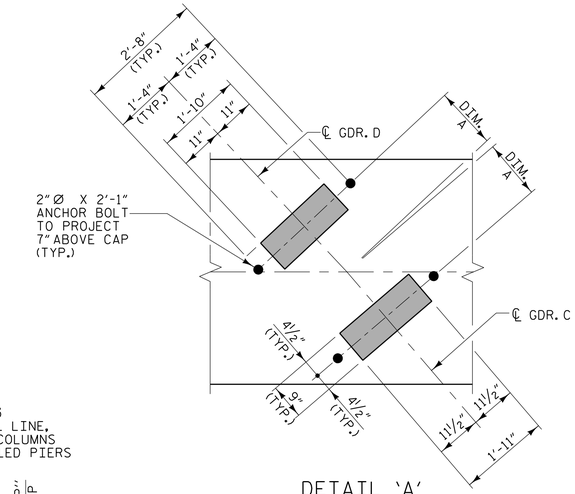

DETAIL 'A'

(TYPICAL EACH GIRDER)

SPAN C		SPAN D	
GIRDER NO.	DIM. A	GIRDER NO.	DIM. A
GDR. C1	1'-3 1/8"	GDR. D1	1'-3 3/4"
GDR. C2	1'-3 1/16"	GDR. D2	1'-3 11/16"
GDR. C3	1'-3 1/16"	GDR. D3	1'-3 5/8"
GDR. C4	1'-3"	GDR. D4	1'-3 9/16"
GDR. C5	1'-2 15/16"	GDR. D5	1'-3 1/2"

DIM. A MEASURED ALONG ℄ GIRDER

INVERT ALTERNATE #5S1 STIRRUPS

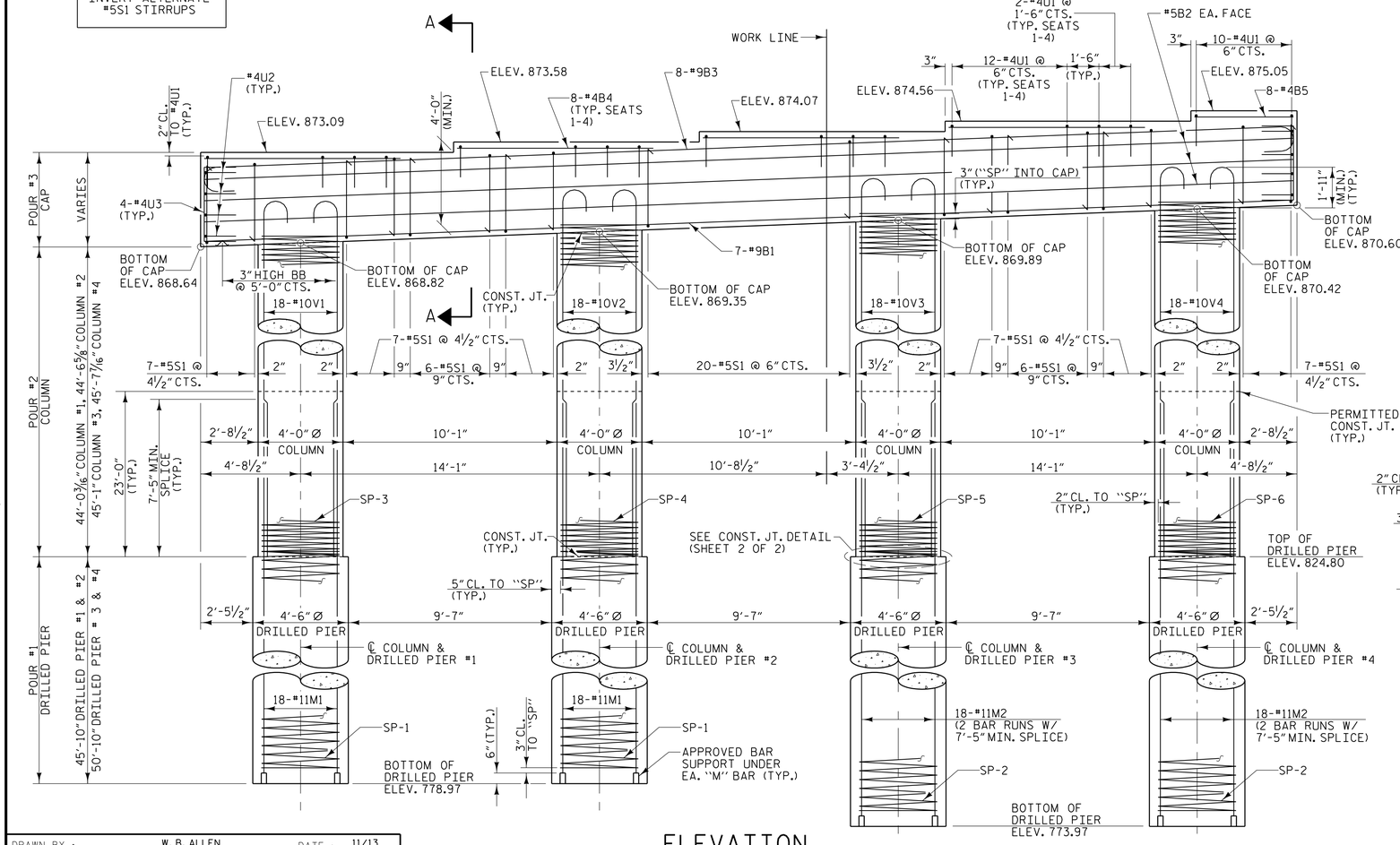

ELEVATION

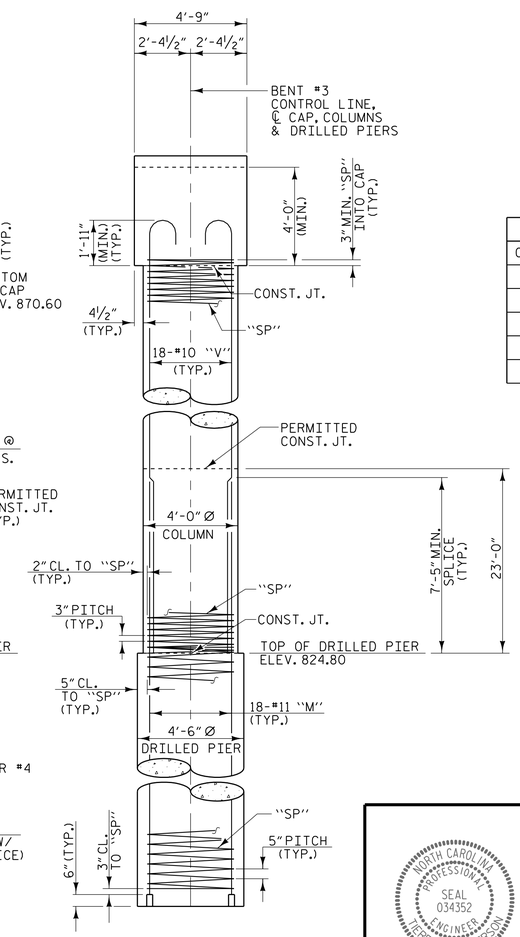

END ELEVATION

PLANS PREPARED BY:

MULKEY ENGINEERS & CONSULTANTS
PO BOX 33127
RALEIGH, N.C. 27636
(919) 851-1912
(919) 851-1918 (FAX)
WWW.MULKEYINC.COM
NC LICENSE NO. C-1021

PROJECT NO. U-2579B

FORSYTH COUNTY

STATION: 17+10.00 -Y4RPA-

SHEET 1 OF 2

STATE OF NORTH CAROLINA
DEPARTMENT OF TRANSPORTATION
RALEIGH

SUBSTRUCTURE

BENT #3

NORTH CAROLINA PROFESSIONAL SEAL 034352 ENGINEER TIERRE R. PETERSON
5/19/2014
DocuSigned by: Tierre R. Peterson
6DC4171647CD40F...

DWG. NO. RPA-39

REVISIONS								SHEET NO.
NO.	BY:	DATE:	NO.	BY:	DATE:			S-256
1			3					TOTAL SHEETS
2			4					707

STR #7

DRAWN BY :	W. B. ALLEN	DATE :	11/13
CHECKED BY :	T. R. PETERSON	DATE :	2/14
DESIGN ENGINEER OF RECORD:	T. R. PETERSON	DATE :	4/23/14

5/9/2014 8:29:10 AM R:\Structures\U-2579B_Ramp A\U-2579B_RPA_SD_B3_01.dgn