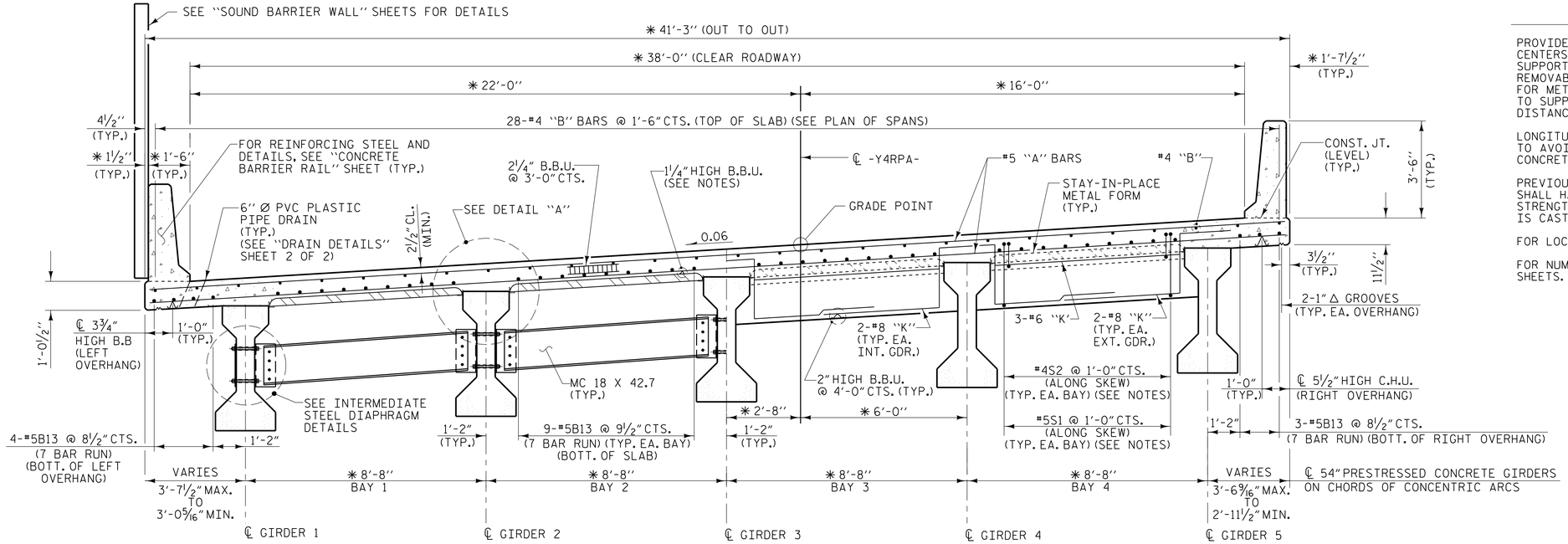

HALF TYPICAL SECTION

SHOWING INTERMEDIATE DIAPHRAGMS

HALF TYPICAL SECTION

SHOWING END BENT DIAPHRAGMS

✱ RADIAL DIMENSIONS CONCENTRIC ABOUT -Y4PRA-

NOTES

PROVIDE 1¼" HIGH BEAM BOLSTERS UPPER (BBU) AT 4'-0" CENTERS ATOP THE METAL STAY-IN-PLACE FORMS TO SUPPORT THE BOTTOM MAT OF "A" BARS. WHEN USING REMOVABLE FORMS, PROVIDE CONTINUOUS HIGH CHAIRS FOR METAL DECK (C.H.C.M.) @ 4'-0" CTS. WITH A HEIGHT TO SUPPORT THE BOTTOM MAT OF "A" BARS A CLEAR DISTANCE OF 2½" ABOVE THE TOP OF THE REMOVABLE FORM.

LONGITUDINAL STEEL MAY BE SHIFTED SLIGHTLY, AS NECESSARY, TO AVOID INTERFERENCE WITH STIRRUPS IN PRESTRESSED CONCRETE GIRDERS AND DRAIN PIPES IN THE DECK.

PREVIOUSLY CAST CONCRETE IN A CONTINUOUS UNIT SHALL HAVE ATTAINED A MINIMUM COMPRESSIVE STRENGTH OF 3,000 PSI BEFORE ADDITIONAL CONCRETE IS CAST IN THE UNIT.

FOR LOCATION OF DECK DRAINS, SEE "PLAN OF SPANS" SHEETS.

FOR NUMBER OF S1 & S2 BARS IN EACH BAY, SEE "PLAN OF SPANS" SHEETS.

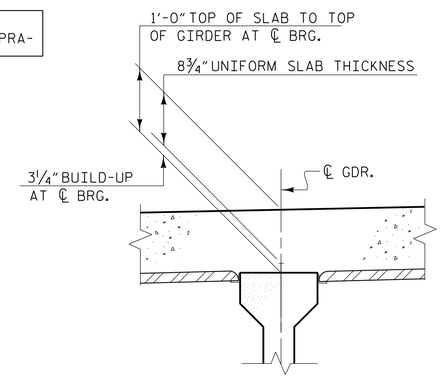

DETAIL "A"

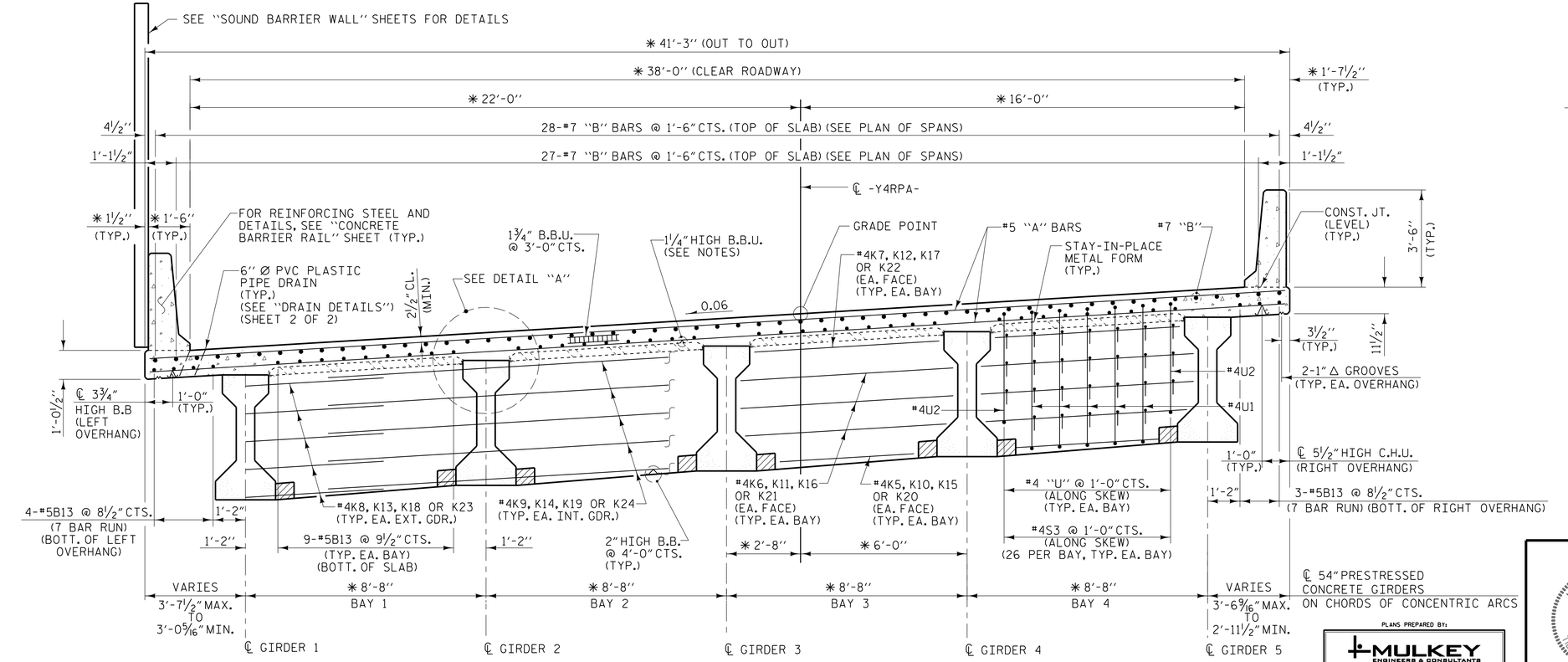

TYPICAL SECTION

SHOWING BENT DIAPHRAGMS

PROJECT NO. U-2579B

FORSYTH COUNTY

STATION: 17+10.00 -Y4RPA-

SHEET 1 OF 2

STATE OF NORTH CAROLINA
DEPARTMENT OF TRANSPORTATION
RALEIGH

SUPERSTRUCTURE

TYPICAL SECTION

PLANS PREPARED BY:

MULKEY ENGINEERS & CONSULTANTS
PO Box 33127
Raleigh, N.C. 27636
(919) 851-1912
(919) 851-1918 (FAX)
WWW.MULKEYINC.COM
NC LICENSE NO. C-1051

NORTH CAROLINA PROFESSIONAL SEAL 034352 ENGINEER THERON R. PETERSON

5/19/2014

DocuSigned by: Theron R. Peterson
6DC4171647CD40F...

DWG. NO. RPA-6

REVISIONS							SHEET NO.
NO.	BY:	DATE:	NO.	BY:	DATE:		S-223
1			3				TOTAL SHEETS
2			4				707

STR #7

DRAWN BY :	W. B. ALLEN	DATE :	7/13
CHECKED BY :	T. R. PETERSON	DATE :	10/13
DESIGN ENGINEER OF RECORD:	T. R. PETERSON	DATE :	4/23/14

5/19/2014 8:00:31 AM R:\Structures\U-2579B_Ramp A\U-2579B_RPA_SD_TS_0.dgn