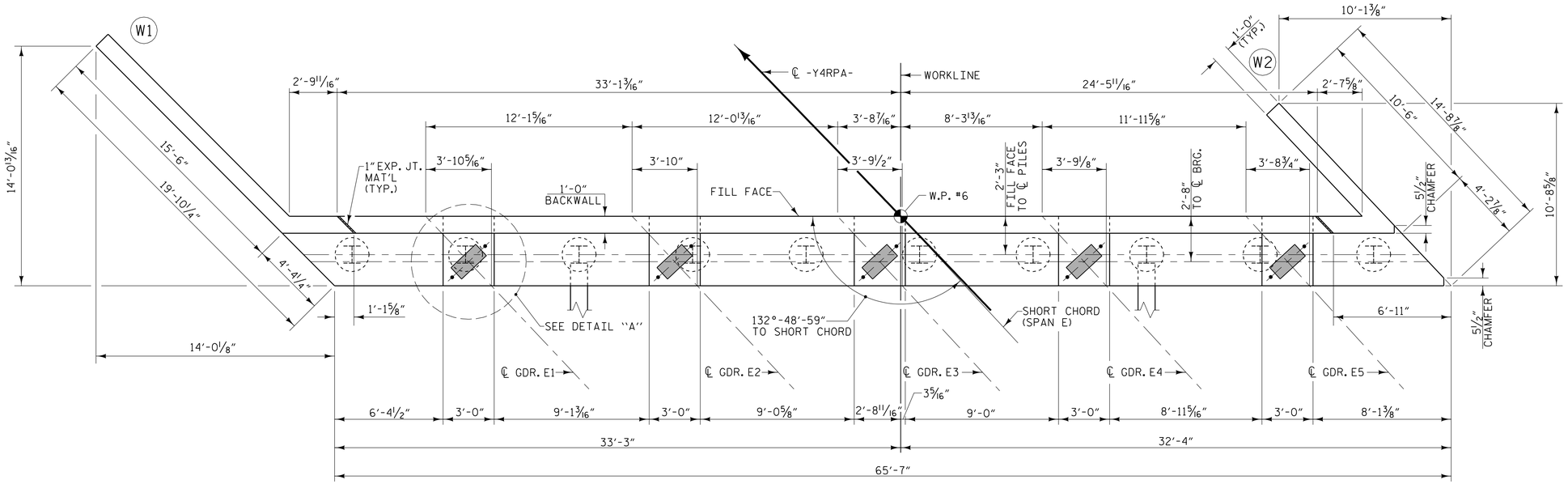

PLAN

NOTES

STIRRUPS AND U2 BARS IN THE CAP MAY BE SHIFTED AS NECESSARY TO CLEAR ANCHOR BOLTS.

BACKWALL SHALL BE PLACED BEFORE APPLYING THE EPOXY PROTECTIVE COATING.

THE TOP SURFACE AREA OF THE END BENT CAP SHALL BE CURED IN ACCORDANCE WITH THE STANDARD SPECIFICATIONS EXCEPT THAT THE MEMBRANE CURING COMPOUND METHOD SHALL NOT BE USED.

THE TOP SURFACE OF THE END BENT CAP EXCEPT THE BRIDGE SEAT BUILDUPS SHALL BE SLOPED TRANSVERSELY FROM THE FILL FACE TO THE BACK FACE AT THE RATE OF 2%.

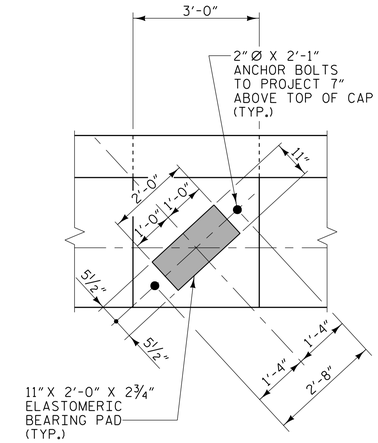

DETAIL "A"

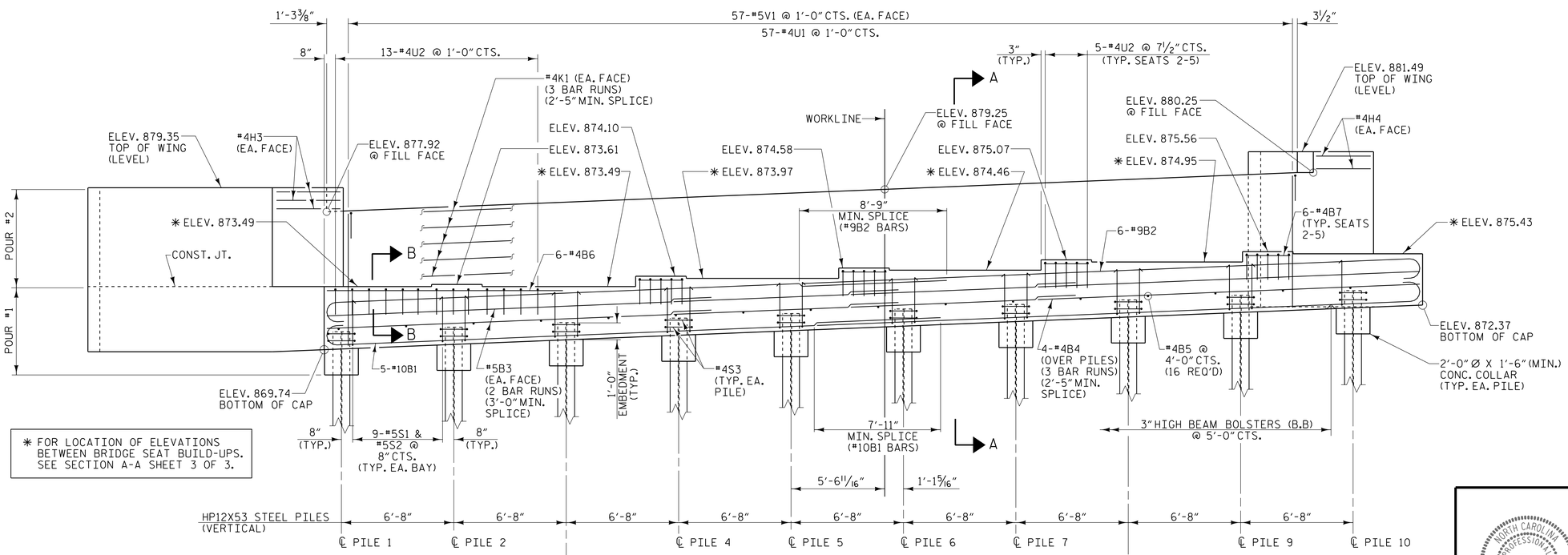

✱ FOR LOCATION OF ELEVATIONS BETWEEN BRIDGE SEAT BUILD-UPS. SEE SECTION A-A SHEET 3 OF 3.

ELEVATION

PILE NO.	PILE ELEVATIONS
1	870.80
2	871.07
3	871.34
4	871.61
5	871.88
6	872.15
7	872.42
8	872.68
9	872.95
10	873.22

PILE ELEVATIONS @ MIN. 1'-0" EMBEDMENT RIGHT SIDE OF PILE FOR PILES IN THE CAP.

PROJECT NO. U-2579B

FORSYTH COUNTY

STATION: 17+10.00 -Y4RPA-

SHEET 1 OF 3

STATE OF NORTH CAROLINA
DEPARTMENT OF TRANSPORTATION
RALEIGH

SUBSTRUCTURE

END BENT #2

PLANS PREPARED BY:

MULKEY ENGINEERS & CONSULTANTS
PO Box 33127
RALEIGH, N.C. 27636
(919) 851-1912
(919) 851-1918 (FAX)
WWW.MULKEYINC.COM
NC LICENSE NO. C-1021

NORTH CAROLINA PROFESSIONAL SEAL 034352 ENGINEER TERRY R. PETERSON
5/19/2014
DocuSigned by: Terry R. Peterson
6DC4171647CD49F...

DWG. NO. RPA-43

REVISIONS							
NO.	BY:	DATE:	NO.	BY:	DATE:	SHEET NO.	S-260
1			3			TOTAL SHEETS	707
2			4				

STR #7

DRAWN BY :	W. B. ALLEN	DATE :	10/13
CHECKED BY :	T. R. PETERSON	DATE :	11/13
DESIGN ENGINEER OF RECORD:	T. R. PETERSON	DATE :	4/23/14

5/19/2014 8:3:57 AM R:\Structures\U-2579B Ramp A\U-2579B_RPA_SD_E2_0.dgn