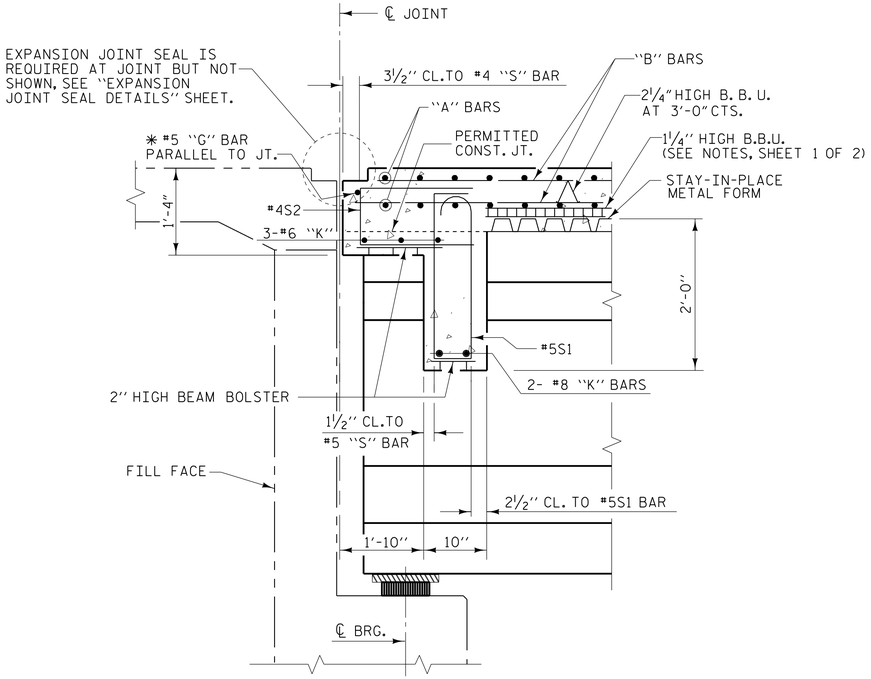

SECTION THRU END BENT DIAPHRAGMS

✱ #5 "G" BAR MAY BE SHIFTED SLIGHTLY AS NECESSARY TO CLEAR REINFORCING STEEL AND STIRRUPS.

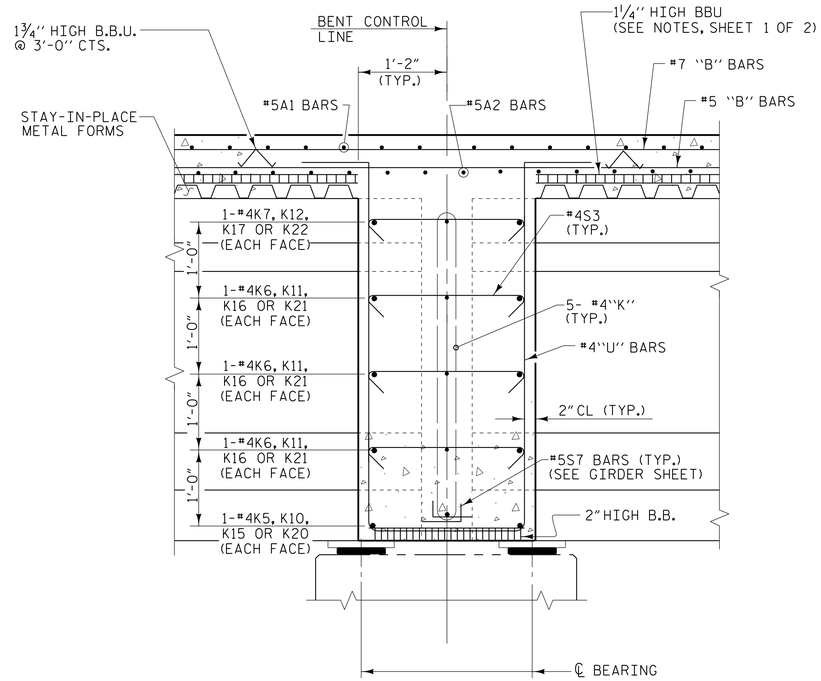

SECTION THRU BENT DIAPHRAGMS

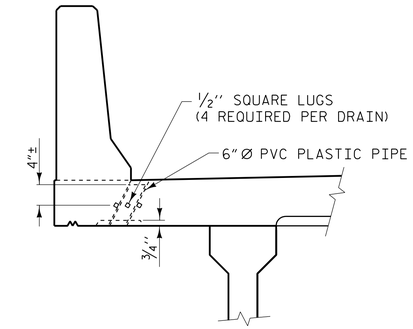

ELEVATION

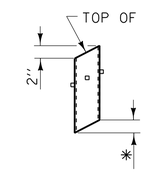

✱ TO BE SET TO MATCH SLOPE OF BOTTOM OF OVERHANG (26 DRAINS REQUIRED)

PIPE DETAIL

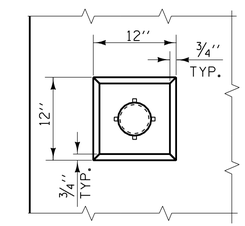

PLAN OF RECESS

NOTES

TOP OF FLOOR DRAINS TO BE SET ⅜" BELOW SURFACE OF SLAB.

4 - ½" SQUARE LUGS TO BE GLUED TO THE P.V.C. PLASTIC PIPE AT EQUAL SPACES AROUND THE PIPE DRAIN APPROXIMATELY 4" FROM THE TOP OF THE PIPE.

THE 6" Ø PVC PLASTIC PIPE AND FITTINGS SHALL BE SCHEDULE 40 AND CONFORM TO ASTM D1785.

DRAIN DETAILS

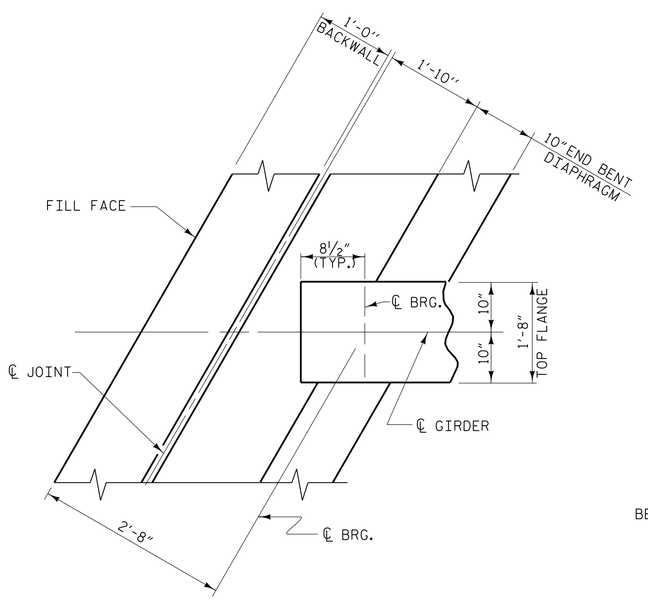

PLAN VIEW OF END BENT DIAPHRAGM

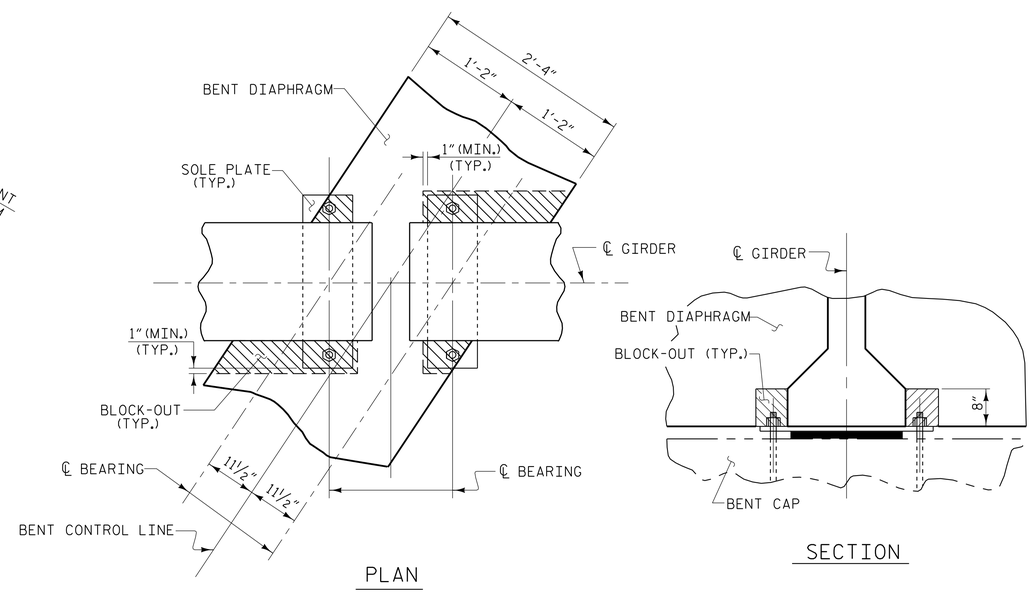

BENT DIAPHRAGM BLOCK-OUT DETAIL

PROJECT NO. U-2579B

FORSYTH COUNTY

STATION: 17+10.00 -Y4RPA-

SHEET 2 OF 2

STATE OF NORTH CAROLINA
DEPARTMENT OF TRANSPORTATION
RALEIGH

SUPERSTRUCTURE

TYPICAL SECTION DETAILS

PLANS PREPARED BY:
MULKEY ENGINEERS & CONSULTANTS
PO Box 33127 RALEIGH, N.C. 27636 (919) 851-1912 (PHONE) (919) 851-1918 (FAX) WWW.MULKEYINC.COM
NC LICENSE NO. C-1021

NORTH CAROLINA PROFESSIONAL SEAL 034352 ENGINEER TERRY R. PETERSON
5/27/2014
DocuSigned by: Terry R. Peterson
6DC417164 7CD40F...

REVISIONS						SHEET NO.
NO.	BY:	DATE:	NO.	BY:	DATE:	S-224
1			3			TOTAL SHEETS
2			4			707

DWG. NO. RPA-7

STR #7

DRAWN BY :	W. B. ALLEN	DATE :	7/13
CHECKED BY :	T. R. PETERSON	DATE :	10/13
DESIGN ENGINEER OF RECORD:	T. R. PETERSON	DATE :	4/23/14

$DATE$ $TIME$ $FILE$