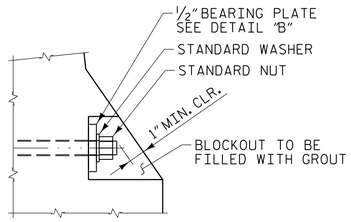

DETAIL "A"

(GROUT SHALL BE IN ACCORDANCE WITH STANDARD SPECIFICATIONS) (LOWER BLOCKOUT SHOWN, UPPER BLOCKOUT SIMILAR)

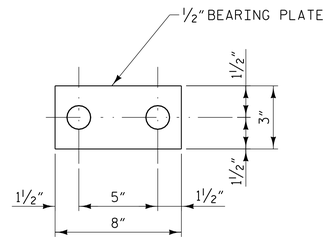

DETAIL "B"

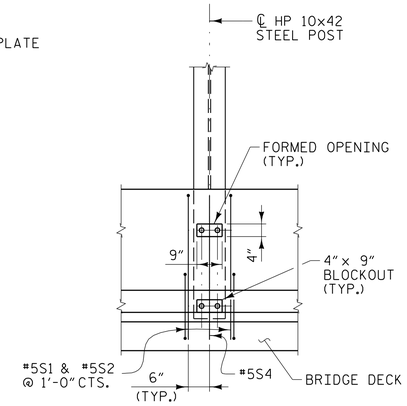

VIEW A-A

(ADJUST #5S1 & #5S2 BAR SPACING AS NECESSARY TO ACCOMMODATE POSTS)

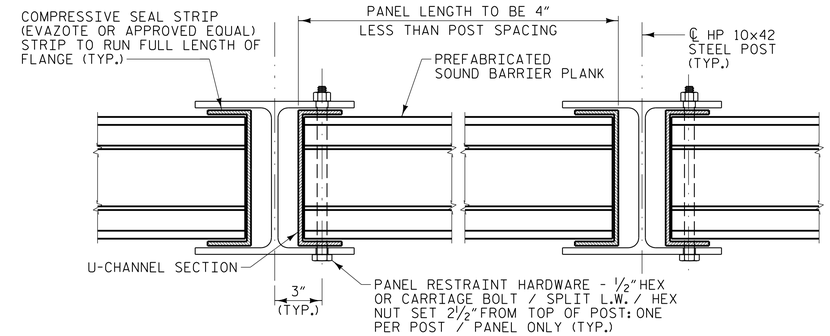

MOUNTING DETAIL - PANEL TYPE 1

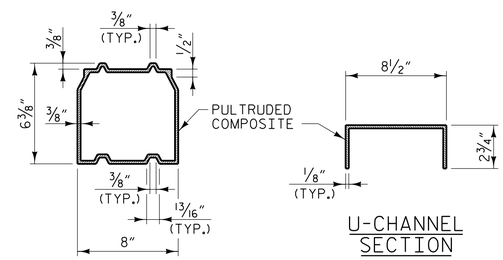

PLANK SECTION

PANEL TYPE 1

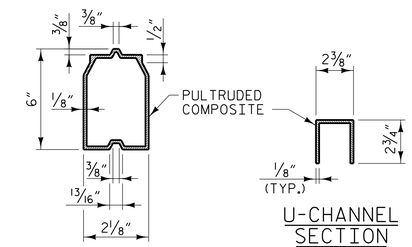

PLANK SECTION

PANEL TYPE 2

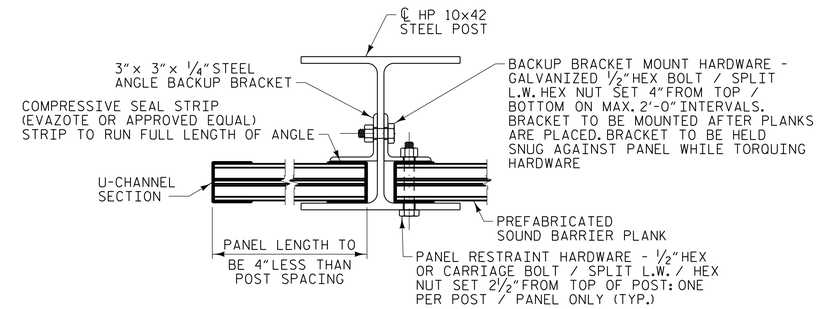

MOUNTING DETAIL - PANEL TYPE 2

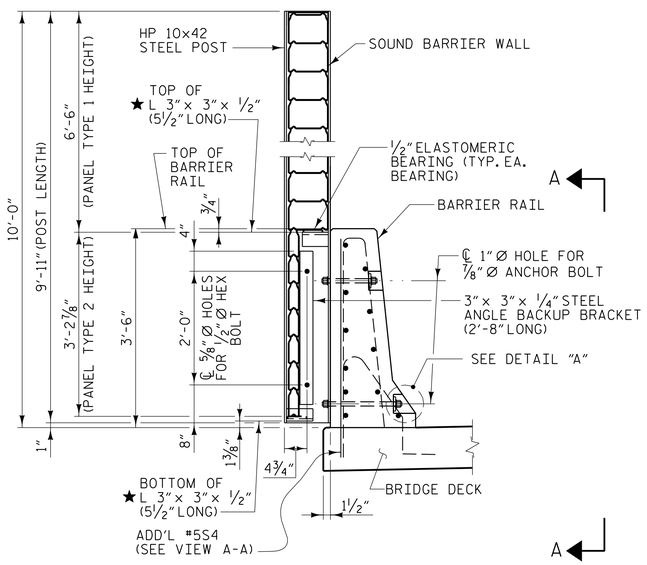

POST ELEVATION

★ SEE "SECTION THRU POST" FOR WELD.

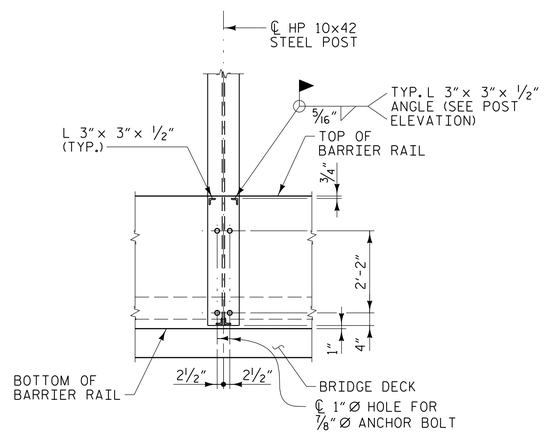

SECTION THRU POST

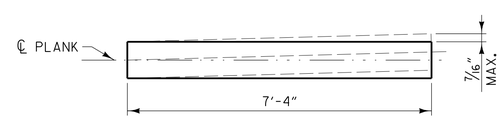

PLANK BOW TOLERANCE

PROJECT NO. U-2579B

FORSYTH COUNTY

STATION: 17+10.00 -Y4RPA-

STATE OF NORTH CAROLINA
DEPARTMENT OF TRANSPORTATION
RALEIGH

SOUND BARRIER WALL DETAILS

PLANS PREPARED BY:
MULKEY ENGINEERS & CONSULTANTS
PO Box 33127 RALEIGH, N.C. 27636
(919) 851-1912
(919) 851-1918 (FAX)
WWW.MULKEYINC.COM
NO LICENSE NO. C-1051

NORTH CAROLINA PROFESSIONAL SEAL 034352 ENGINEER THERON R. PETERSON 5/19/2014
DocuSigned by: Theron R. Peterson
6DC4171647CD40F...

DWG. NO. RPA-27

REVISIONS						SHEET NO.
NO.	BY:	DATE:	NO.	BY:	DATE:	S-244
1			3			TOTAL SHEETS
2			4			707

STR #7

DRAWN BY :	W. B. ALLEN	DATE :	4/14
CHECKED BY :	T. R. PETERSON	DATE :	4/14
DESIGN ENGINEER OF RECORD:	T. R. PETERSON	DATE :	4/23/14

5/19/2014 8:15:52 AM R:\Structures\U-2579B_Ramp A\U-2579B_RPA_SD_SBW_02.dgn