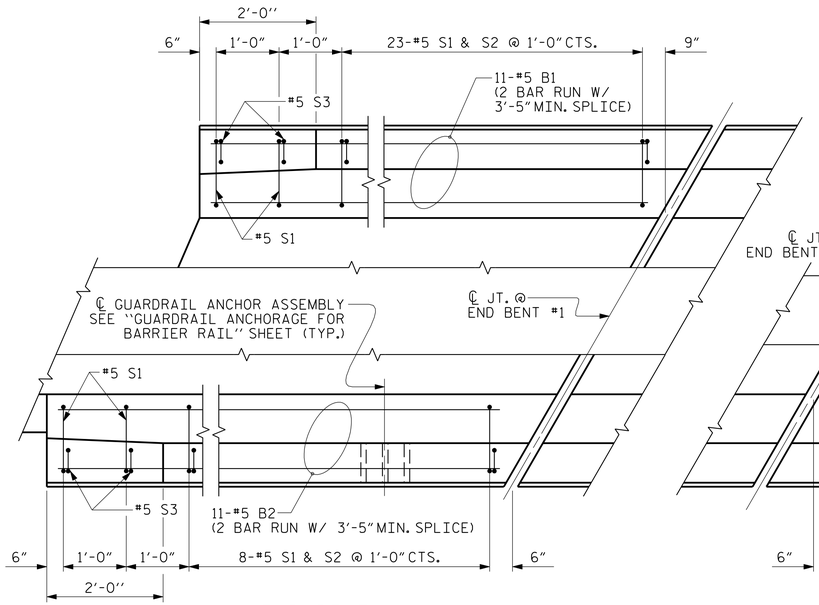

END BENT #1

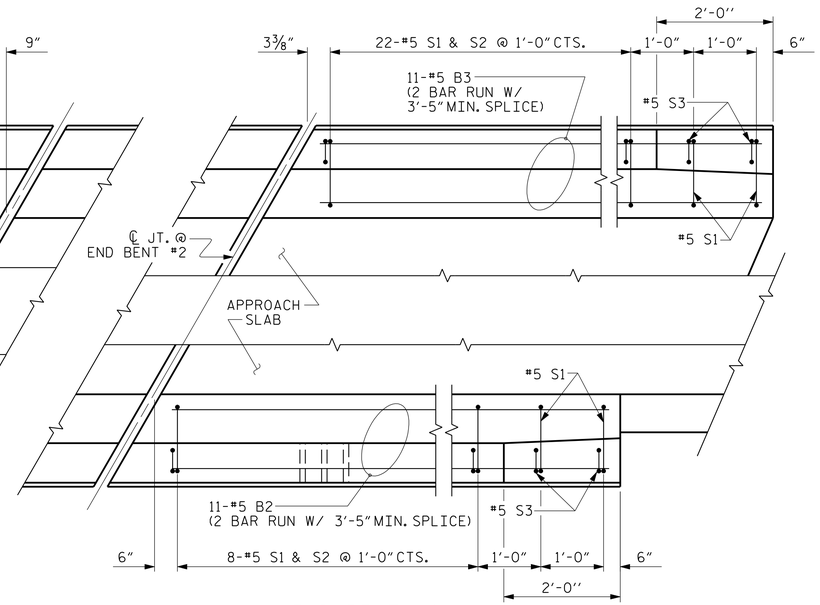

END BENT #2

PLAN OF BARRIER RAIL

FOR SOUND WALL CONNECTIONS & LOCATION OF #5S4 BARS
SEE "SOUND BARRIER WALL" SHEETS FOR DETAILS.

NOTES

THE COST OF THE BARRIER RAIL ON THE APPROACH SLAB SHALL BE INCLUDED IN THE LINEAR FOOT CONTRACT PRICE BID FOR "CONCRETE BARRIER RAIL".

THE BARRIER RAIL ON EACH APPROACH SLAB SHALL NOT BE CAST UNTIL ALL APPROACH SLAB CONCRETE HAS BEEN CAST AND HAS REACHED A MINIMUM COMPRESSIVE STRENGTH OF 3,000 PSI.

ALL REINFORCING STEEL IN BARRIER RAILS SHALL BE EPOXY COATED.

BAR TYPES

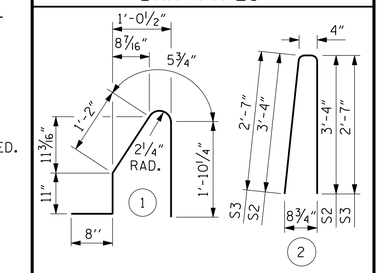

ALL BAR DIMENSIONS ARE OUT TO OUT

BILL OF MATERIAL

BARRIER RAIL ONLY

BAR	NO.	SIZE	TYPE	LENGTH	WEIGHT
✱B1	22	#5	STR	14'-7"	335
✱B2	44	#5	STR	7'-1"	325
✱B3	22	#5	STR	14'-1"	323
✱S1	69	#5	1	5'-1"	366
✱S2	61	#5	2	7'-0"	445
✱S3	8	#5	2	5'-6"	46
✱S4	4	#5	STR	4'-0"	17
✱EPOXY COATED REINFORCING STEEL				LBS.	1857
CLASS AA CONCRETE				C. Y.	9.6
CONCRETE BARRIER RAIL				71.36	LIN. FT.

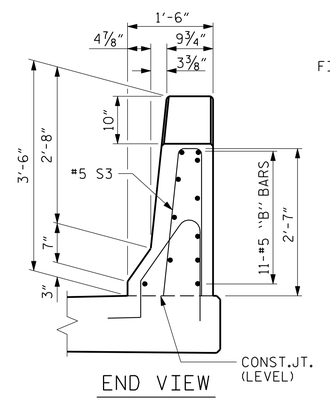

END VIEW

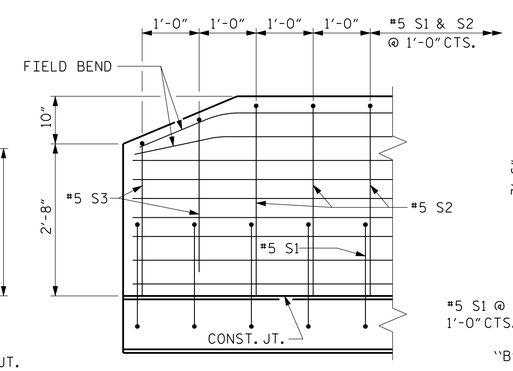

SIDE VIEW

END OF RAIL DETAILS

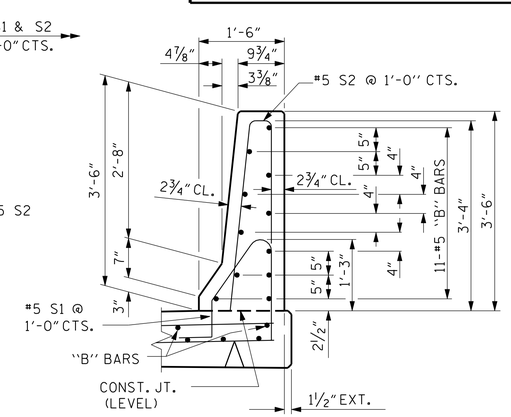

SECTION THRU RAIL

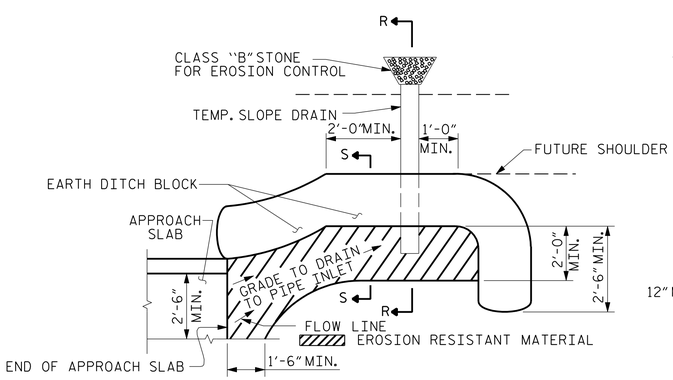

NOTE: IMMEDIATELY AFTER THE CONSTRUCTION OF THE APPROACH SLAB, THE CONTRACTOR SHALL PROVIDE TEMPORARY BERM AND SLOPE DRAIN. CONTRACTOR SHALL GRADE TO PIPE INLET AND PROVIDE EROSION RESISTANT MATERIAL AS SHOWN. THE EROSION RESISTANT MATERIAL SHALL BE EITHER 1) ASPHALT PLANT MIX, TYPE 1 OR TYPE 2, MIN. 2" DEPTH, 2) EROSION CONTROL MAT, OR 3) CONCRETE, AS DIRECTED BY THE ENGINEER. THE SLOPE DRAIN SHALL CONSIST OF A NON-PERFORATED TEMPORARY DRAINAGE PIPE, 12 INCHES IN DIAMETER.

PLAN VIEW

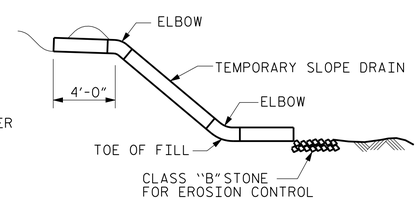

SECTION R-R

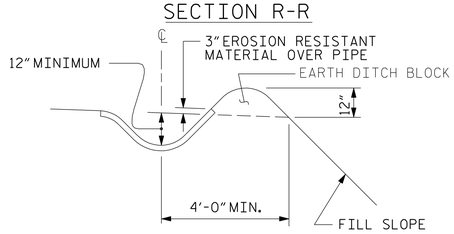

SECTION S-S

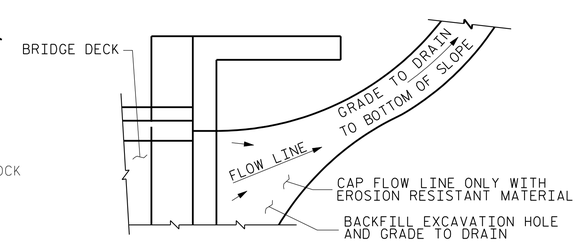

NOTE: IF THE APPROACH SLAB IS NOT CONSTRUCTED IMMEDIATELY AFTER THE BACKFILLING OF THE END BENT EXCAVATION, GRADE TO DRAIN TO THE BOTTOM OF THE SLOPE AND PROVIDE EROSION RESISTANT MATERIAL, SUCH AS FIBERGLASS ROVING OR AS DIRECTED BY THE ENGINEER TO PREVENT SOIL EROSION AND TO PROTECT THE AREA ADJACENT TO THE STRUCTURE. THE CONTRACTOR WILL BE REQUIRED TO REMOVE THESE MATERIALS PRIOR TO CONSTRUCTION OF THE APPROACH SLAB.

TEMPORARY DRAINAGE DETAIL

TEMPORARY BERM AND SLOPE DRAIN DETAILS

(TO BE USED WHEN SHOULDER BERM GUTTER IS REQUIRED)

PROJECT NO. U-2579B
FORSYTH COUNTY
STATION: 17+10.00 -Y4RPA-
SHEET 3 OF 3

PLANS PREPARED BY:
MULKEY ENGINEERS & CONSULTANTS
PO Box 33127
RALEIGH, N.C. 27636
(919) 851-1912
(919) 851-1918 (FAX)
WWW.MULKEYINC.COM
NC LICENSE NO. C-1031

THIS STANDARD DRAWING REVIEWED & ADOPTED FOR USE AT THE REFERENCED LOCATION BY THE UNDERSIGNED:

NORTH CAROLINA PROFESSIONAL SEAL 034352 ENGINEER TERRY R. PETERSON

DocuSigned by: Terry R. Peterson
6DC4171647CD40F
5/19/2014

DWG. NO. RPA-49

STATE OF NORTH CAROLINA
DEPARTMENT OF TRANSPORTATION
RALEIGH

STANDARD

BRIDGE APPROACH
SLAB DETAILS

REVISIONS							SHEET NO.
NO.	BY:	DATE:	NO.	BY:	DATE:		S-266
1			3				TOTAL SHEETS
2			4				707

STR #7

STD. NO. BAS4 (SHT 3b)

ASSEMBLED BY : W. B. ALLEN	DATE : 9/13		
CHECKED BY : T. R. PETERSON	DATE : 10/13		
DRAWN BY : FCJ 11/88	REV. 10/1/11	MAA/GM	
CHECKED BY : ARB 11/88	REV. 7/12	MAA/GM	
	REV. 6/13	MAA/GM	

5/9/2014 8:35:49 AM R:\Structures\U-2579B_Rpa_A\U-2579B_RPA_SD_AS_03.dgn