NOTES

STIRRUPS AND "U" BARS IN CAP MAY BE SHIFTED AS NECESSARY TO CLEAR ANCHOR BOLTS.

HOOKS ON "V" BARS MAY BE TURNED AS NECESSARY FOR PLACING REINFORCING STEEL.

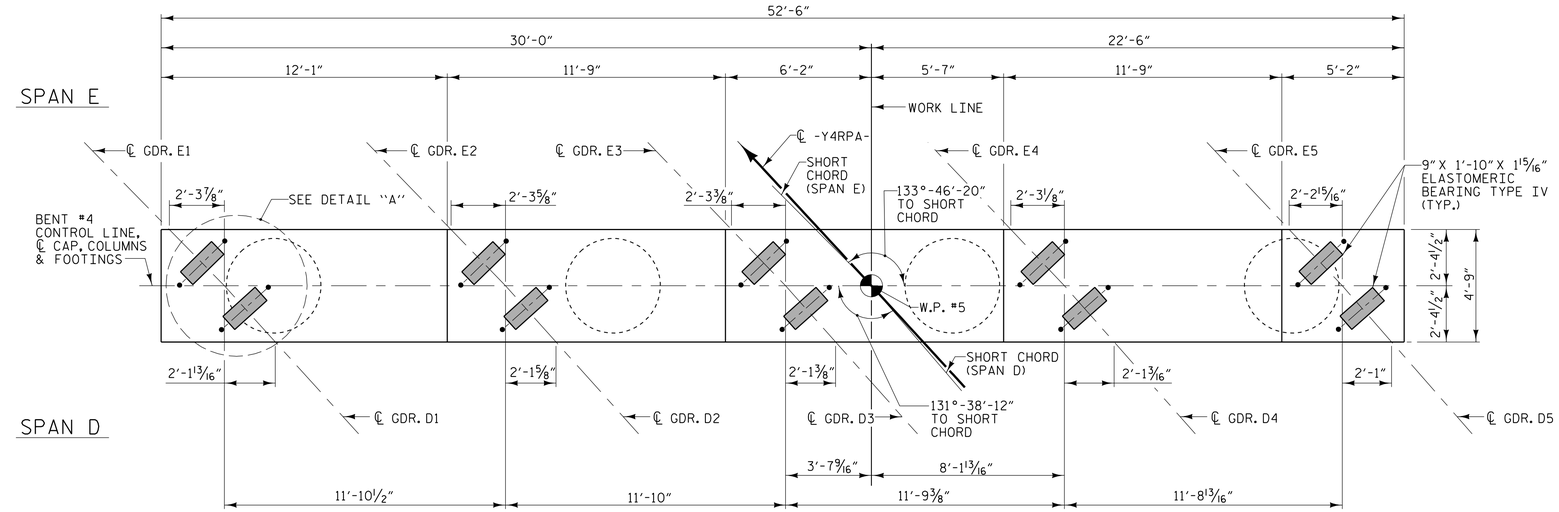

PLAN

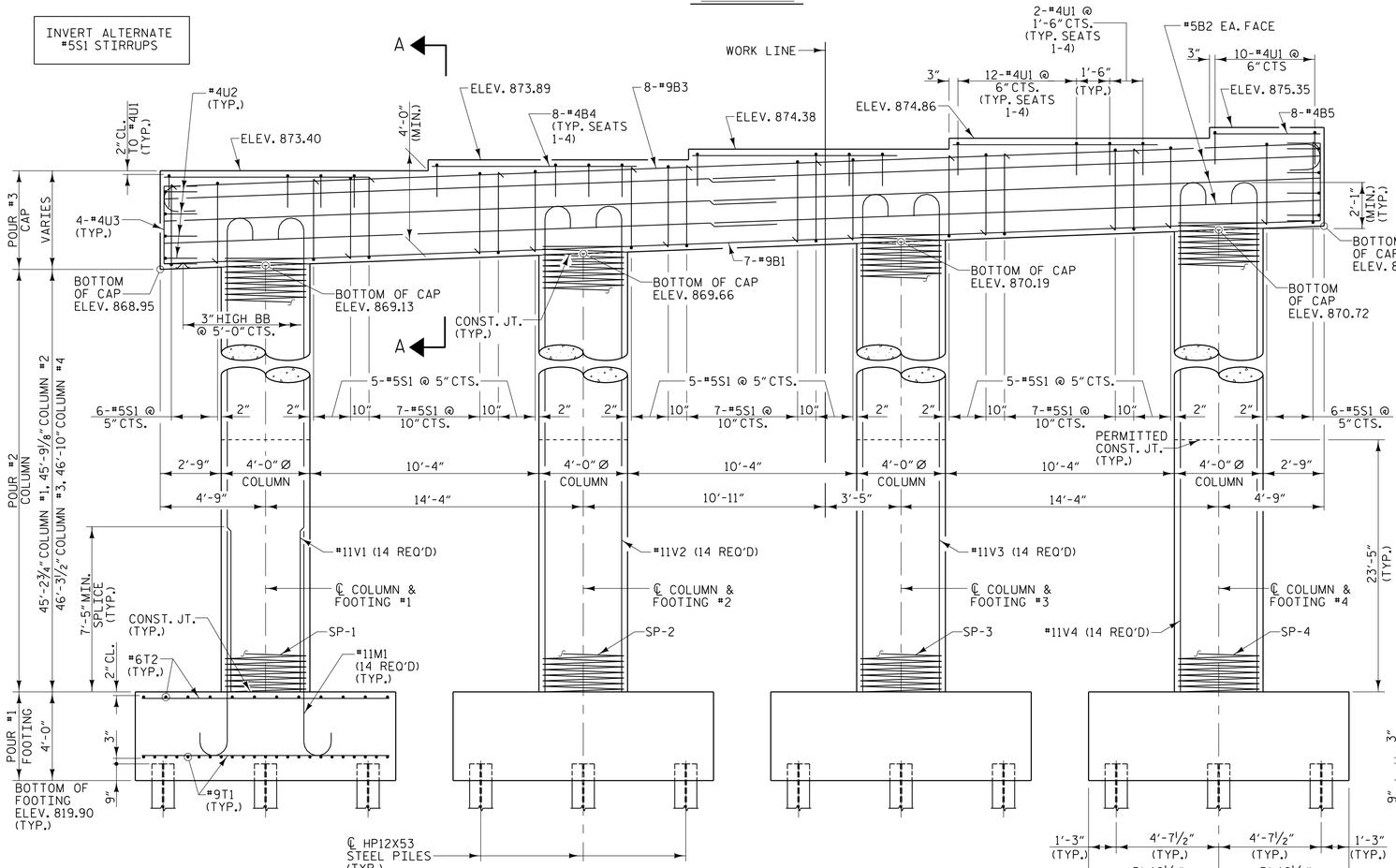

ELEVATION

NOTE: REINFORCING STEEL IN FOOTINGS ("T" & "M" BARS) TYPICAL

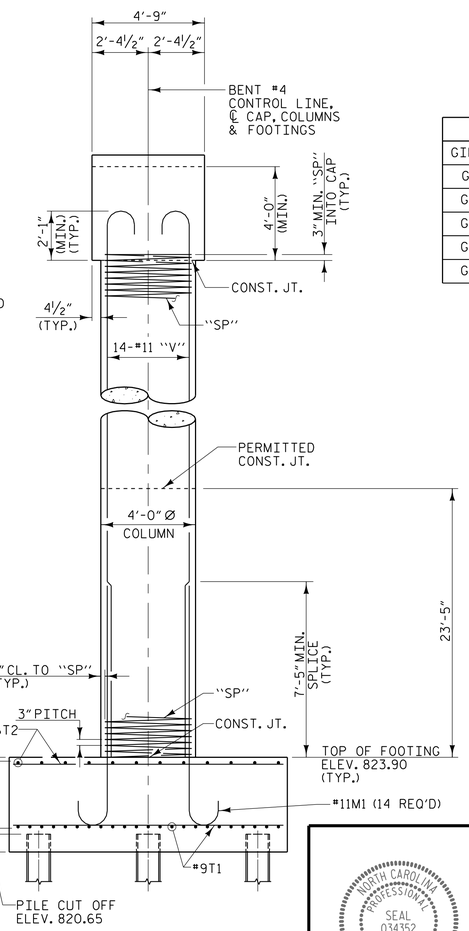

END ELEVATION

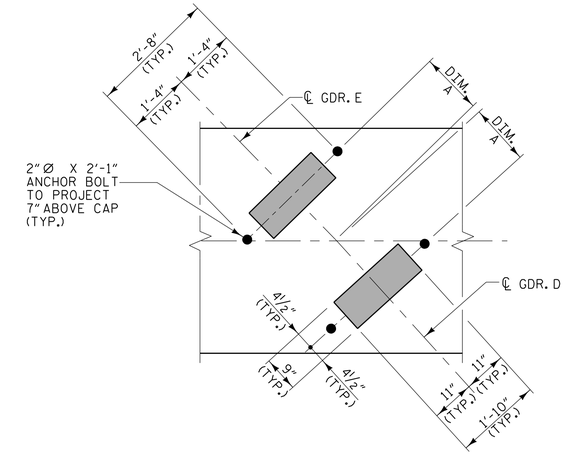

DETAIL 'A'

(TYPICAL EACH GIRDER)

SPAN D		SPAN E	
GIRDER NO.	DIM. A	GIRDER NO.	DIM. A
GDR. D1	1'-3 1/2"	GDR. E1	1'-4 1/16"
GDR. D2	1'-3 7/16"	GDR. E2	1'-4"
GDR. D3	1'-3 3/8"	GDR. E3	1'-3 15/16"
GDR. D4	1'-3 3/8"	GDR. E4	1'-3 7/8"
GDR. D5	1'-3 5/16"	GDR. E5	1'-3 13/16"

DIM. A MEASURED ALONG ℄ GIRDER

PLANS PREPARED BY:

MULKEY ENGINEERS & CONSULTANTS
PO Box 33127
Raleigh, N.C. 27636
(919) 851-1912
(919) 851-1918 (FAX)
WWW.MULKEYINC.COM
NC LICENSE NO. C-1051

PROJECT NO. U-2579B

FORSYTH COUNTY

STATION: 17+10.00 -Y4RPA-

SHEET 1 OF 2

STATE OF NORTH CAROLINA
DEPARTMENT OF TRANSPORTATION
RALEIGH

SUBSTRUCTURE

BENT #4

NORTH CAROLINA PROFESSIONAL SEAL 034352 ENGINEER TERRY R. PETERSON

5/19/2014

DocuSigned by: Terry R. Peterson
6DC417164 7CD40F...

DWG. NO. RPA-41

REVISIONS						SHEET NO.
NO.	BY:	DATE:	NO.	BY:	DATE:	S-258
1			3			TOTAL SHEETS
2			4			707

STR #7

DRAWN BY :	W. B. ALLEN	DATE :	11/13
CHECKED BY :	T. R. PETERSON	DATE :	2/14
DESIGN ENGINEER OF RECORD:	T. R. PETERSON	DATE :	4/23/14

5/19/2014 8:30:29 AM R:\Structures\U-2579B_Ramp A\U-2579B_RPA_SD_B4_0.dgn