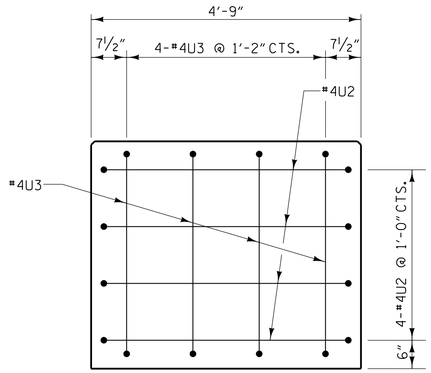

CAP END VIEW

(TYP. EACH END)

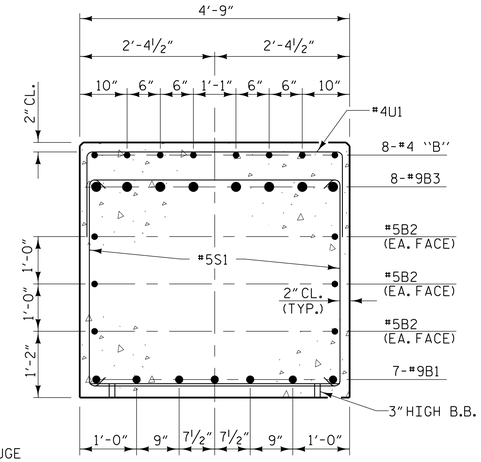

SECTION A-A

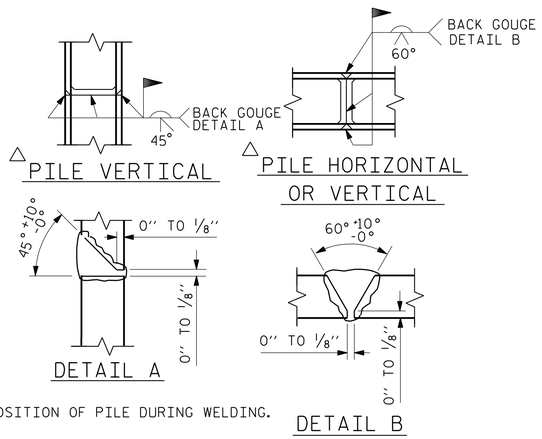

△ POSITION OF PILE DURING WELDING.

PILE SPLICE DETAILS

BAR TYPES

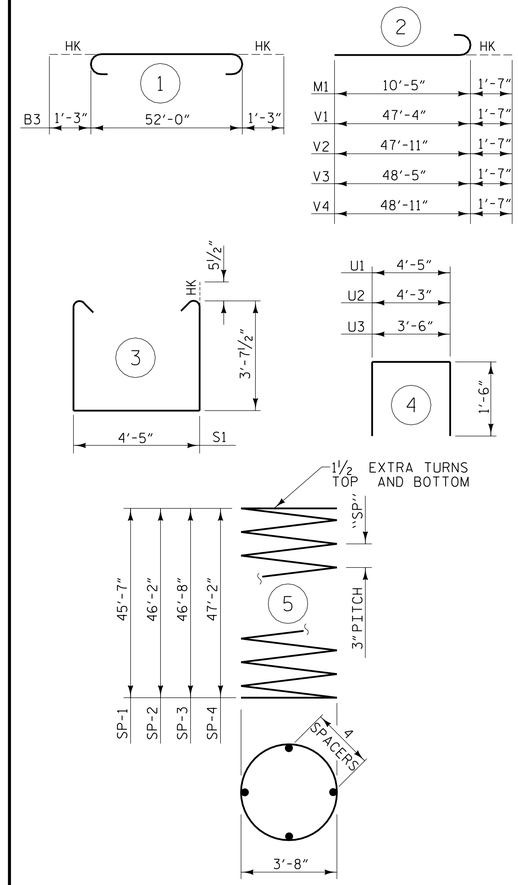

ALL BAR DIMENSIONS ARE OUT TO OUT

BILL OF MATERIAL

BENT #4

BAR	NO.	SIZE	TYPE	LENGTH	WEIGHT
B1	7	#9	STR	52'-0"	1238
B2	6	#5	STR	52'-2"	326
B3	8	#9	1	54'-6"	1482
B4	32	#4	STR	9'-3"	198
B5	8	#4	STR	4'-10"	26
M1	56	#11	2	12'-0"	3570
S1	63	#5	3	12'-7"	827
T1	184	#9	STR	11'-3"	7038
T2	96	#6	STR	11'-3"	1622
U1	66	#4	4	7'-5"	327
U2	8	#4	4	7'-3"	39
U3	8	#4	4	6'-6"	35
V1	14	#11	2	48'-11"	3639
V2	14	#11	2	49'-6"	3682
V3	14	#11	2	50'-0"	3719
V4	14	#11	2	50'-6"	3756
TOTAL REINFORCING STEEL					31524 lbs.

SPIRAL COLUMN REINFORCING STEEL (SP)					
SP-1	1	**	5	2118'-9"	1415
SP-2	1	**	5	2141'-7"	1431
SP-3	1	**	5	2164'-4"	1446
SP-4	1	**	5	2187'-1"	1461
TOTAL SPIRAL COLUMN REINFORCING STEEL (SP)					5753 lbs.

CLASS "A" CONCRETE - CU. YARDS

POUR 1 - FOOTINGS	81.9 CU. YDS.
POUR 2 - COLUMNS	85.7 CU. YDS.
POUR 3 - CAP	39.9 CU. YDS.
TOTAL CLASS "A" CONCRETE	207.5 CU. YDS.

HP12X53 STEEL PILES
36 PILES REQUIRED - LIN. FEET 720

** THE SP-1, SP-2, SP-3 AND SP-4 SPIRAL REINFORCING STEEL SHALL BE W20 OR D-20 COLD DRAWN WIRE OR #4 PLAIN OR DEFORMED BAR.

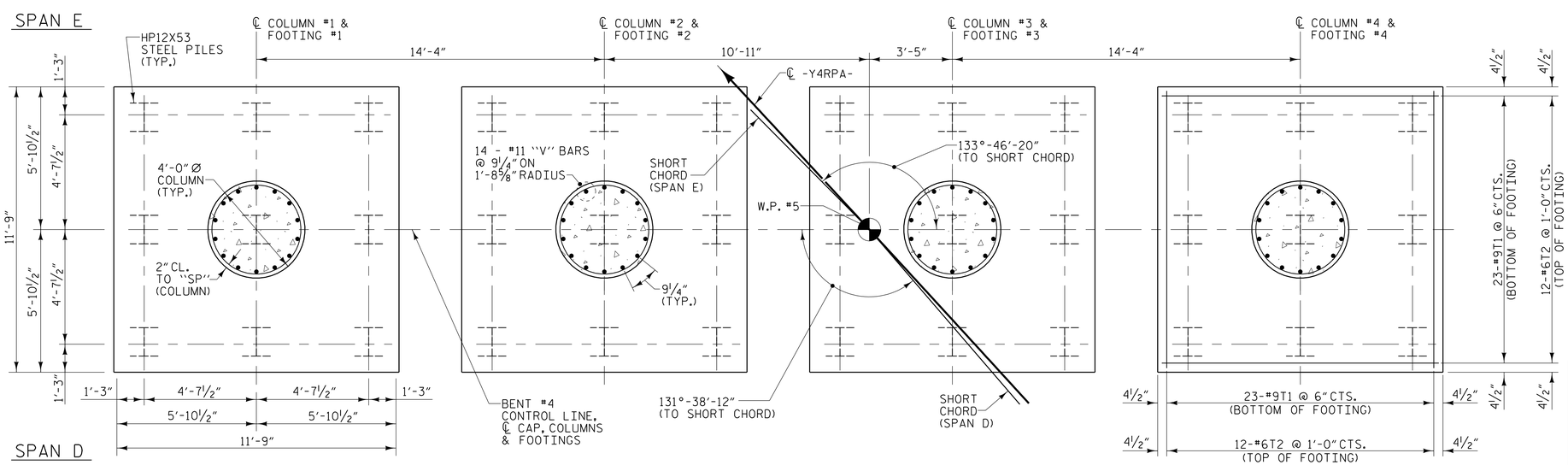

PLAN OF COLUMNS AND FOOTINGS

(DIMENSIONS AND REINFORCING STEEL ARE TYPICAL FOR EACH COLUMN AND FOOTING)

PLANS PREPARED BY:

MULKEY ENGINEERS & CONSULTANTS
PO Box 33127
RALEIGH, N.C. 27636
(919) 851-1912
(919) 851-1918 (FAX)
WWW.MULKEYINC.COM
NC LICENSE NO. C-1021

PROJECT NO. U-2579B
FORSYTH COUNTY
STATION: 17+10.00 -Y4RPA-

SHEET 2 OF 2

STATE OF NORTH CAROLINA
DEPARTMENT OF TRANSPORTATION
RALEIGH

SUBSTRUCTURE

BENT #4

NORTH CAROLINA PROFESSIONAL SEAL 034352 ENGINEER TERRE R. PETERSON
5/19/2014
DocuSigned by: Terre R. Peterson
6DC4171647CD40F

DWG. NO. RPA-42

REVISIONS							
NO.	BY:	DATE:	NO.	BY:	DATE:	SHEET NO.	S-259
1			3			TOTAL SHEETS	707
2			4				

STR #7

DRAWN BY :	W. B. ALLEN	DATE :	12/13
CHECKED BY :	T. R. PETERSON	DATE :	2/14
DESIGN ENGINEER OF RECORD:	T. R. PETERSON	DATE :	4/23/14

5/9/2014 8:36:03 AM R:\Structures\U-2579B_Ramp A\U-2579B_RPA_SD_B4_02.dgn