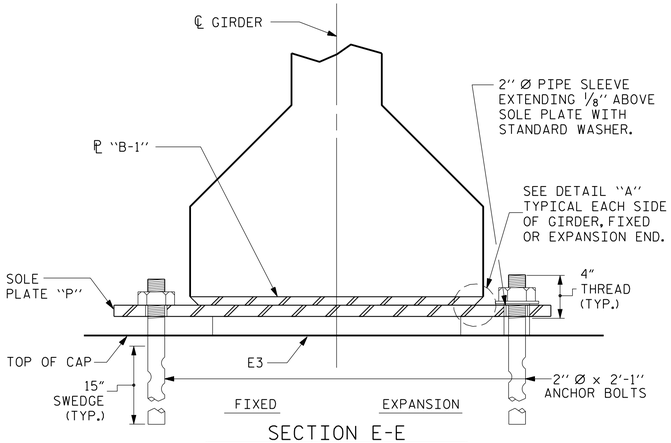

SECTION E-E

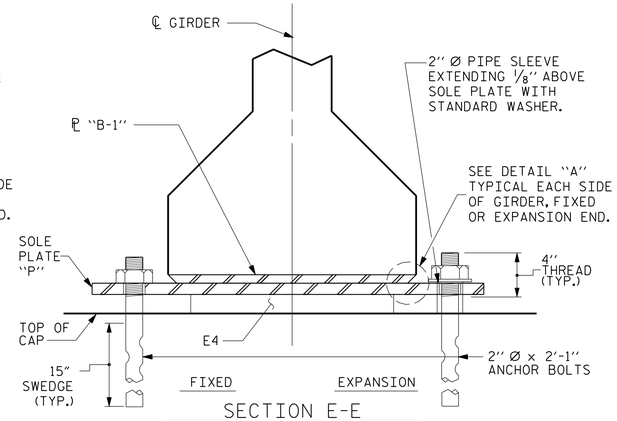

SECTION E-E

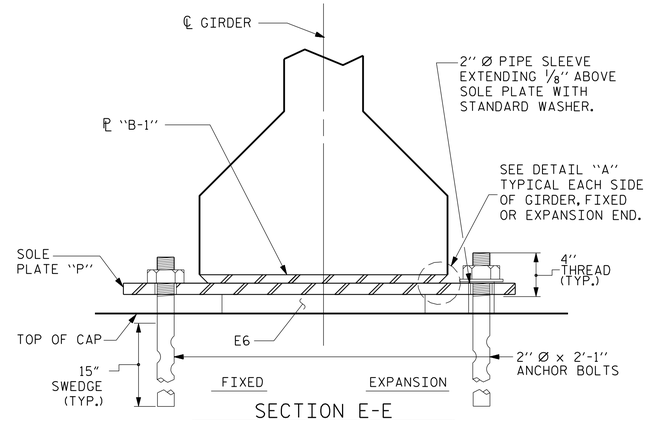

SECTION E-E

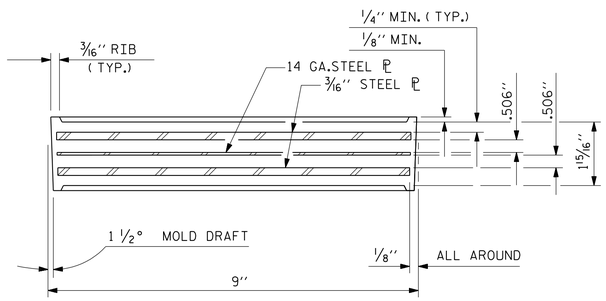

TYPICAL SECTION OF ELASTOMERIC BEARINGS

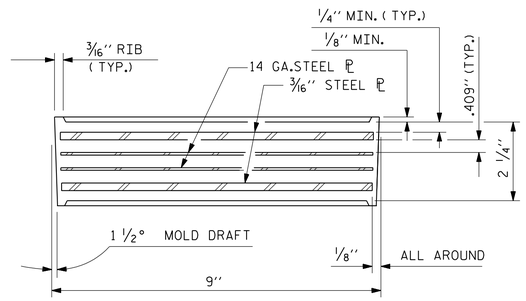

TYPICAL SECTION OF ELASTOMERIC BEARINGS

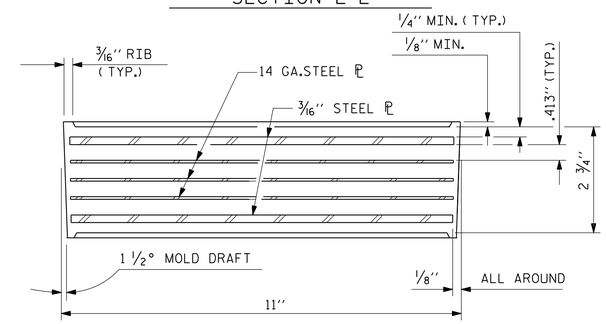

TYPICAL SECTION OF ELASTOMERIC BEARINGS

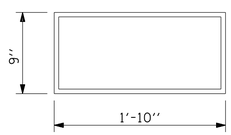

E3 (30 REQ'D)

PLAN VIEW OF ELASTOMERIC BEARING

TYPE IV

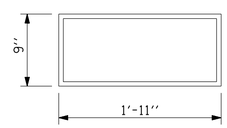

E4 (10 REQ'D)

PLAN VIEW OF ELASTOMERIC BEARING

TYPE V

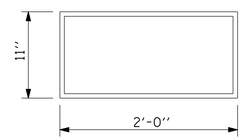

E6 (10 REQ'D)

PLAN VIEW OF ELASTOMERIC BEARING

TYPE VII

NOTES

AT ALL FIXED POINTS OF SUPPORT, NUTS FOR ANCHOR BOLTS ARE TO BE TIGHTENED FINGER TIGHT AND THEN BACKED OFF 1/2 TURN. THE THREAD OF THE NUT AND BOLT SHALL THEN BE BURRED WITH A SHARP POINTED TOOL.

THE 2" Ø PIPE SLEEVE SHALL BE CUT FROM SCHEDULE 40 PVC PLASTIC PIPE. THE PVC PLASTIC PIPE SHALL MEET THE REQUIREMENTS OF ASTM D1785.

STEEL SOLE PLATES, ANCHOR BOLTS, NUTS, AND WASHERS SHALL BE GALVANIZED IN ACCORDANCE WITH THE STANDARD SPECIFICATIONS.

PRIOR TO WELDING, GRIND THE GALVANIZED SURFACE OF THE PORTION OF THE EMBEDDED PLATE AND SOLE PLATE THAT ARE TO BE WELDED. AFTER WELDING, DAMAGED GALVANIZED SURFACES SHALL BE REPAIRED IN ACCORDANCE WITH THE STANDARD SPECIFICATIONS.

WHEN WELDING THE SOLE PLATE TO THE EMBEDDED PLATE IN THE GIRDER, USE TEMPERATURE INDICATING WAX PENS, OR OTHER SUITABLE MEANS, TO ENSURE THAT THE TEMPERATURE OF THE SOLE PLATE DOES NOT EXCEED 300°F. TEMPERATURES ABOVE THIS MAY DAMAGE THE ELASTOMER.

SOLE PLATE "P", BOLTS, NUTS, WASHERS, AND PIPE SLEEVE SHALL BE INCLUDED IN THE PAY ITEM FOR PRESTRESSED CONCRETE GIRDERS.

ANCHOR BOLTS SHALL MEET THE REQUIREMENTS OF ASTM A449. NUTS SHALL MEET THE REQUIREMENTS OF AASHTO M291-DH OR AASHTO M292-2H. WASHERS SHALL MEET THE REQUIREMENTS OF AASHTO M293. NO SHOP DRAWINGS ARE REQUIRED FOR ANCHOR BOLTS, NUTS AND WASHERS. SHOP INSPECTION IS REQUIRED.

ALL SURFACES OF BEARING PLATES SHALL BE SMOOTH AND STRAIGHT.

THE ELASTOMER IN THE STEEL REINFORCED BEARINGS SHALL HAVE A SHEAR MODULUS OF 0.160 KSI, IN ACCORDANCE WITH AASHTO M251.

FOR STEEL REINFORCED ELASTOMERIC BEARINGS, SEE SPECIAL PROVISIONS.

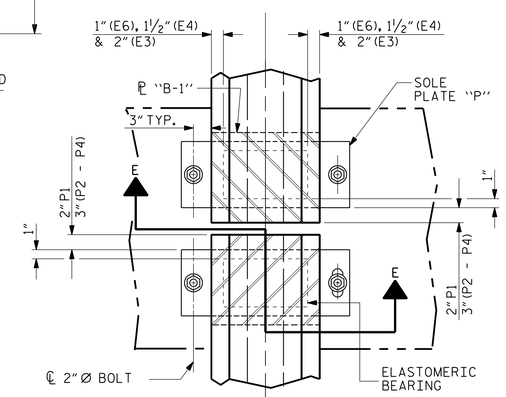

TYPICAL HALF-PLAN (SHOWING CONTINUOUS BENT)

TYPICAL HALF-PLAN (SHOWING SIMPLE SPAN BENT)

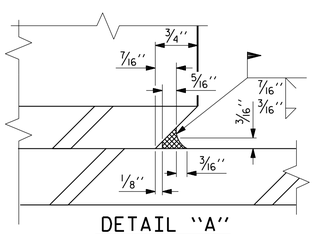

DETAIL "A"

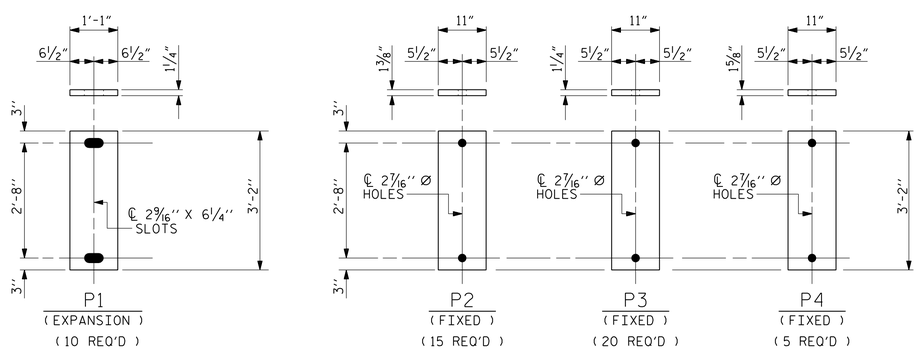

SOLE PLATE DETAILS ("P")

MAXIMUM ALLOWABLE SERVICE LOADS	
D.L.+L.L. (NO IMPACT)	
TYPE IV	225 k
TYPE V	365 k
TYPE VII	470 k

PLANS PREPARED BY:

MULKEY ENGINEERS & CONSULTANTS
PO Box 33127
RALEIGH, N.C. 27636
(919) 851-1912
(919) 851-1918 (FAX)
WWW.MULKEYINC.COM
NC LICENSE NO. C-1021

THIS STANDARD DRAWING REVIEWED & ADOPTED FOR USE AT THE REFERENCED LOCATION BY THE UNDERSIGNED:

NORTH CAROLINA PROFESSIONAL SEAL 034352 ENGINEER TERRY R. PETERSON

DocuSigned by: Terry R. Peterson 5/19/2014
8DC417164TCD40F...

DWG. NO. RPA-23

PROJECT NO. U-2579B

FORSYTH COUNTY

STATION: 17+10.00 -Y4RPA-

STATE OF NORTH CAROLINA
DEPARTMENT OF TRANSPORTATION
RALEIGH

ELASTOMERIC BEARING DETAILS

PRESTRESSED CONCRETE GIRDER SUPERSTRUCTURE

REVISIONS						SHEET NO.
NO.	BY:	DATE:	NO.	BY:	DATE:	S-240
1			3			TOTAL SHEETS
2			4			707

STR #7

STD. NO. EB4

ASSEMBLED BY : W. B. ALLEN		DATE : 9/13	
CHECKED BY : T. R. PETERSON		DATE : 10/13	
DRAWN BY : EEM	2/97	REV. 5/1/06	TLA/GM
CHECKED BY : VAP	2/97	REV. 10/1/11	MAA/GM
		REV. 10/24/12	AAC/MAA

5/19/2014 8:02:33 AM R:\Structures\U-2579B Ramp A\U-2579B_RPA_SD_EB_01.dgn