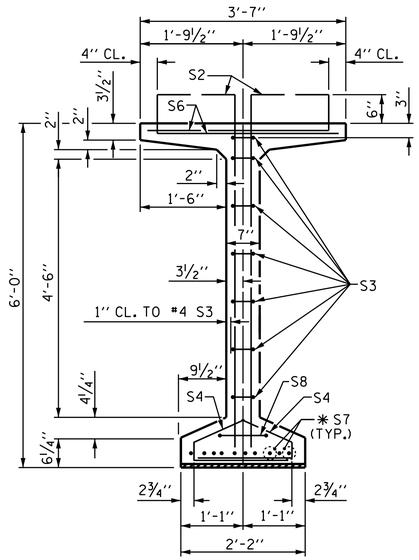

SECTION B-B

*FOR S7 BARS, SEE DETAIL "C" OF 72" PRESTRESSED CONCRETE MODIFIED BULB TEE GIRDER CONTINUOUS FOR LIVE LOAD DETAILS SHEET

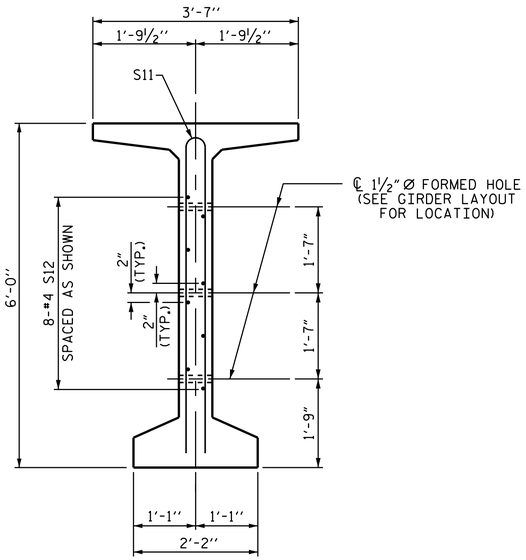

SECTION C-C

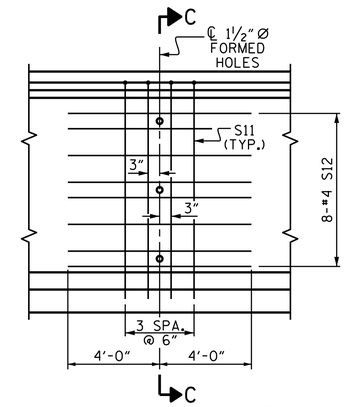

PARTIAL ELEVATION

SHOWING INTERMEDIATE STEEL DIAPHRAGM REINFORCING STEEL FOR ALL GIRDERS

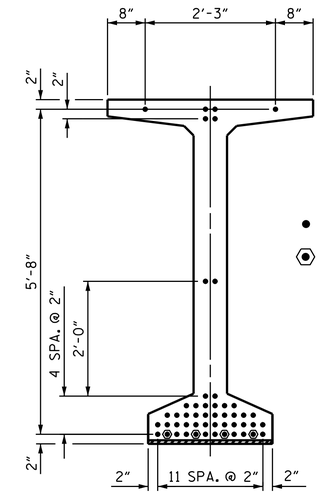

DEBONDING LEGEND

- ● FULLY BONDED STRANDS
- ⬡ STRANDS DEBONDED FOR 12'-0" FROM END OF GIRDER

0.6" Ø LOW RELAXATION STRAND LAYOUT

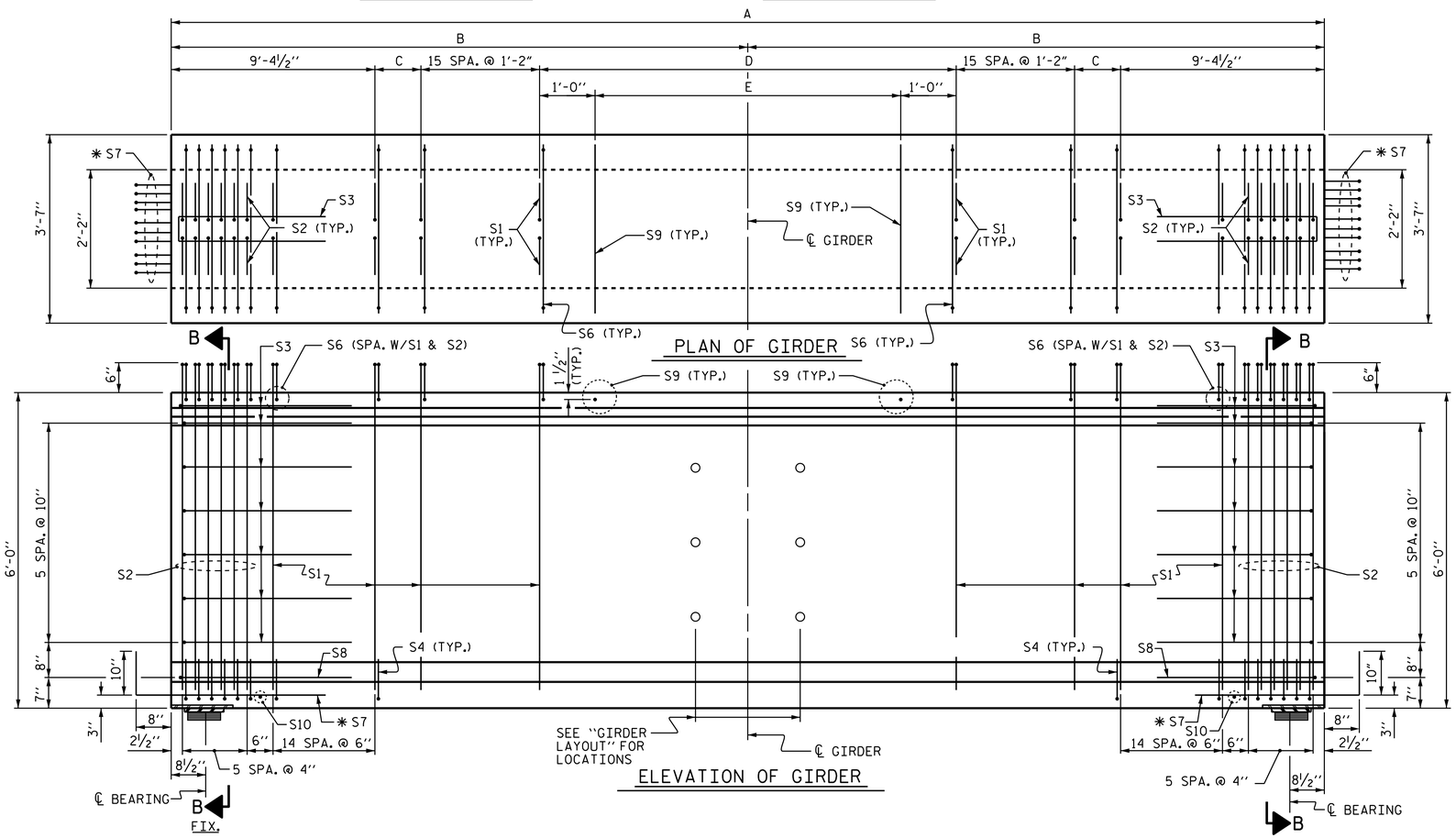

GIRDER DIMENSIONS

	A	B	C	D	E
GIRDER B1	115'-5¼"	57'-8⅝"	10⅛"	30 SPA. @ 2'-0"	30-#5 S9 @ 2'-0" CTS.
GIRDER B2	116'-6½"	58'-3¼"	4¾"	31 SPA. @ 2'-0"	31-#5 S9 @ 2'-0" CTS.
GIRDER B3	117'-7⅝"	58'-9 13/16"	11 5/16"	31 SPA. @ 2'-0"	31-#5 S9 @ 2'-0" CTS.
GIRDER B4	118'-8¾"	59'-4⅜"	5⅞"	32 SPA. @ 2'-0"	32-#5 S9 @ 2'-0" CTS.
GIRDER B5	119'-10"	59'-11"	1'-0½"	32 SPA. @ 2'-0"	32-#5 S9 @ 2'-0" CTS.
GIRDER B6	120'-11"	60'-5½"	7"	33 SPA. @ 2'-0"	33-#5 S9 @ 2'-0" CTS.
GIRDER B7	122'-0¼"	61'-0⅛"	1'-1⅝"	33 SPA. @ 2'-0"	33-#5 S9 @ 2'-0" CTS.
GIRDER B8	123'-1⅜"	61'-6 11/16"	8 3/16"	34 SPA. @ 2'-0"	34-#5 S9 @ 2'-0" CTS.

(NOTE: FOR BILL OF MATERIAL SEE SHEET 3 OF 5.)

PROJECT NO. U-2579B

FORSYTH COUNTY

STATION: 584+36.24 -L-

SHEET 2 OF 5

STATE OF NORTH CAROLINA
DEPARTMENT OF TRANSPORTATION
RALEIGH

STANDARD
72" PRESTRESSED CONCRETE MODIFIED BULB TEE CONTINUOUS FOR LIVE LOAD SPAN B (RIGHT LANE)

NORTH CAROLINA PROFESSIONAL SEAL 23371 ENGINEER VIPUL A. PATEL

Docusigned by: Vipul A. Patel 1C157DE15D464AA... 8/1/2014

REVISIONS							SHEET NO.
NO.	BY:	DATE:	NO.	BY:	DATE:		S-192
1			3				TOTAL SHEETS
2			4				707

STR. #6

STD. NO. PCG8

ASSEMBLED BY : T. H. CARROLL	DATE : 1/3/14	
CHECKED BY : P. S. ADKINS	DATE : 2/28/14	
DRAWN BY : EEM 2/6/97	REV. 5/1/06R	TLA/GM
CHECKED BY : VAP 2/6/97	REV. 10/1/11	MAA/GM
	REV. 6/13	MAA/GM

DESIGN ENGINEER OF RECORD: H. A. LOCKLEAR DATE : 6/4/14

31-JUL-2014 17:16
R:\Structures\Plans\Str06\U2579B_SD_G*_06.dgn
lsutton