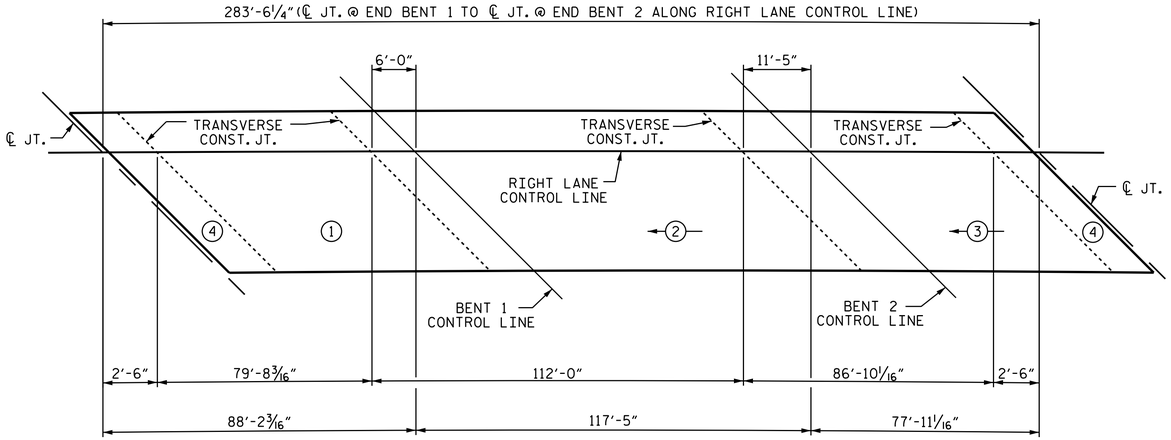

POURING SEQUENCE

INDICATES POUR NUMBER AND DIRECTION OF POUR

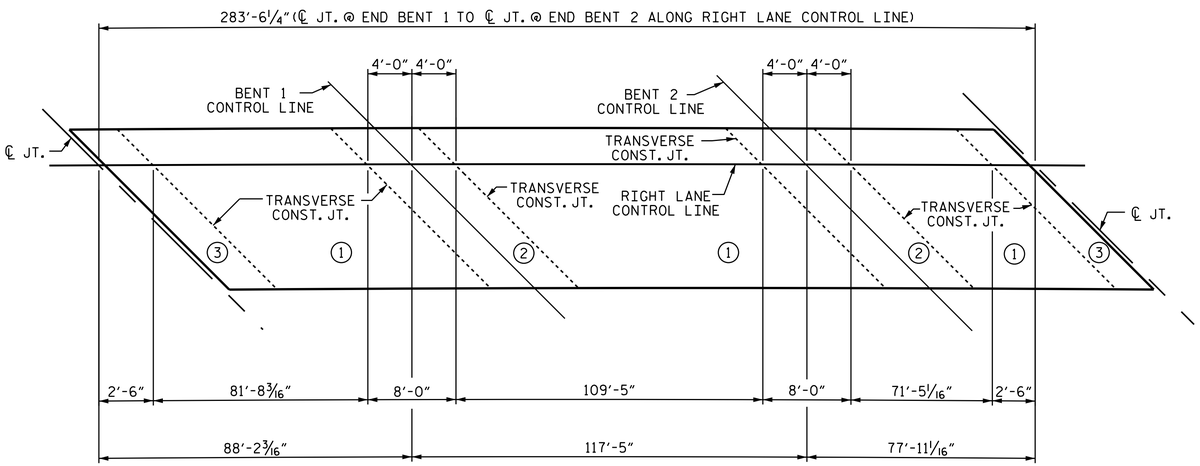

OPTIONAL POURING SEQUENCE

POUR ② CAN NOT BE STARTED UNTIL BOTH ADJACENT
POUR ① REACH A MINIMUM OF 3000 PSI

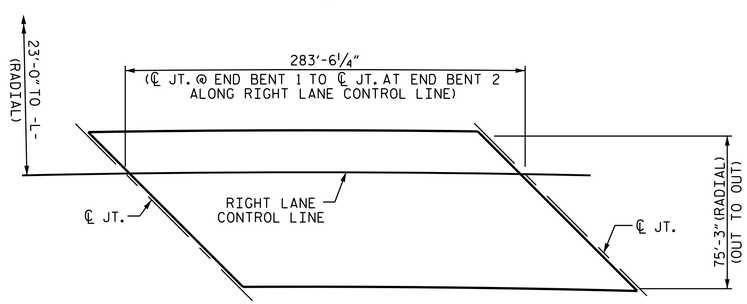

LAYOUT FOR COMPUTING AREA REINFORCED CONCRETE DECK SLAB

(SQ. FT. = 21,539)

REINFORCING BAR SCHEDULE

SPANS A, B & C

BAR	NO.	SIZE	TYPE	LENGTH	WEIGHT	BAR	NO.	SIZE	TYPE	LENGTH	WEIGHT
✳ A1	882	#5	STR	38'-9"	35647	✳ B1	104	#4	STR	30'-0"	2084
A2	441	#5	STR	43'-5"	19970	✳ B2	104	#7	STR	38'-10"	8255
A3	441	#5	STR	33'-8"	15485	✳ B3	49	#7	STR	31'-3"	3130
						✳ B4	104	#4	STR	24'-9"	1719
✳ A101	2	#5	STR	57'-6"	120	✳ B5	104	#7	STR	37'-3"	7918
✳ A102	2	#5	STR	42'-6"	89	✳ B6	49	#7	STR	29'-8"	2971
✳ A103	2	#5	STR	27'-5"	57	✳ B7	104	#4	STR	26'-6"	1841
✳ A104	2	#5	STR	12'-4"	26	B8	275	#5	STR	59'-9"	17138
✳ A105	1	#5	STR	4'-10"	5	B9	42	#5	STR	31'-3"	1369
✳ A106	4	#5	STR	35'-0"	146	B10	42	#5	STR	29'-8"	1300
✳ A107	4	#5	STR	31'-10"	133						
✳ A108	2	#5	STR	54'-8"	114	✳ G1	2	#5	STR	38'-10"	81
✳ A109	2	#5	STR	48'-4"	101	✳ G2	2	#5	STR	39'-8"	83
✳ A110	2	#5	STR	41'-11"	87						
✳ A111	2	#5	STR	35'-7"	74	✳ J1	147	#4	7	1'-5"	139
✳ A112	2	#5	STR	29'-2"	61						
✳ A113	2	#5	STR	22'-10"	48	✳ K1	8	#8	1	14'-9"	315
✳ A114	2	#5	STR	16'-5"	34	✳ K2	24	#8	2	22'-10"	1463
✳ A115	2	#5	STR	10'-1"	21	✳ K3	28	#6	STR	5'-10"	245
✳ A116	2	#5	STR	3'-8"	8	K4	28	#4	STR	6'-3"	117
						K5	140	#4	STR	8'-10"	826
A201	4	#5	STR	31'-11"	133	K6	28	#4	STR	5'-10"	109
A202	2	#5	STR	46'-6"	97	K7	42	#4	STR	25'-6"	715
A203	2	#5	STR	31'-5"	66						
A204	2	#5	STR	16'-5"	34	✳ S1	98	#5	3	5'-10"	596
A205	1	#5	STR	8'-10"	9	✳ S2	98	#4	4	3'-3"	213
A206	4	#5	STR	35'-9"	149	S3	672	#4	5	2'-9"	1234
A207	4	#5	STR	31'-10"	133						
A208	2	#5	STR	54'-8"	114	U1	98	#4	6	16'-6"	1080
A209	2	#5	STR	48'-4"	101	U2	28	#4	8	10'-11"	204
A210	2	#5	STR	41'-11"	87						
A211	2	#5	STR	35'-7"	74						
A212	2	#5	STR	29'-2"	61						
A213	2	#5	STR	22'-10"	48	REINFORCING STEEL				LBS.	60,716
A214	2	#5	STR	16'-5"	34						
A215	2	#5	STR	10'-1"	21	✳ EPOXY COATED REINFORCING STEEL				LBS.	67,824
A216	2	#5	STR	3'-9"	8						

SUPERSTRUCTURE BILL OF MATERIAL

	SAND LIGHTWEIGHT CONCRETE	REINFORCING STEEL	EPOXY COATED REINFORCING STEEL
	(CU. YDS.)	(LBS.)	(LBS.)
POUR #1	207.9	60,716	67,824
POUR #2	324.6		
POUR #3	253.8		
POUR #4	18.0		
TOTALS✳✳	804.3	60,716	67,824

✳✳QUANTITIES FOR BARRIER RAIL ARE NOT INCLUDED

GROOVING BRIDGE FLOORS

APPROACH SLABS	4,085	SQ.FT.
BRIDGE DECK	19,668	SQ.FT.
TOTAL	23,753	SQ.FT.

SUPERSTRUCTURE REINFORCING STEEL LENGTHS ARE BASED ON THE FOLLOWING MINIMUM SPLICE LENGTHS

BAR SIZE	SUPERSTRUCTURE EXCEPT APPROACH SLABS, PARAPET, AND BARRIER RAIL		APPROACH SLABS		PARAPET AND BARRIER RAIL
	EPOXY COATED	UNCOATED	EPOXY COATED	UNCOATED	
#4	2'-0"	1'-9"	2'-0"	1'-9"	2'-9"
#5	2'-6"	2'-2"	2'-6"	2'-2"	3'-5"
#6	3'-0"	2'-7"	3'-10"	2'-7"	4'-4"
#7	5'-3"	3'-6"			
#8	6'-10"	4'-7"			

BAR TYPES

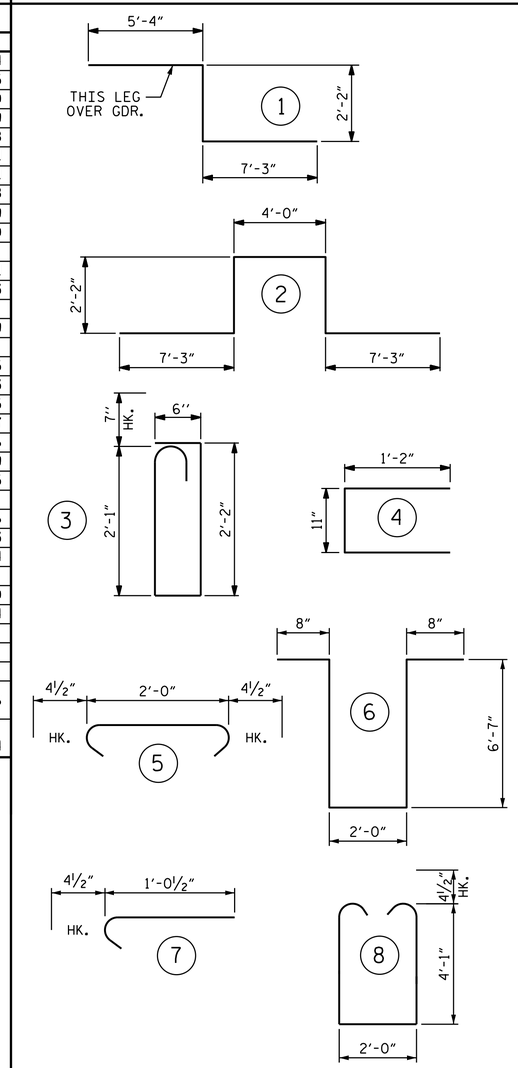

ALL BAR DIMENSIONS ARE OUT TO OUT.

PROJECT NO. U-2579B
FORSYTH COUNTY
STATION: 584+36.24 -L-

STATE OF NORTH CAROLINA
DEPARTMENT OF TRANSPORTATION
RALEIGH

SUPERSTRUCTURE
BILL OF MATERIAL

(RIGHT LANE)

NORTH CAROLINA PROFESSIONAL SEAL 23371 ENGINEER VIPUL A. PATEL

DocuSigned by: Vipul A. Patel
1C157DE15D464AA...
8/1/2014

REVISIONS						SHEET NO.
NO.	BY:	DATE:	NO.	BY:	DATE:	S-203
1			3			TOTAL SHEETS
2			4			707

STR. #6

DRAWN BY :	T. H. CARROLL	DATE :	1/14/14
CHECKED BY :	P. S. ADKINS	DATE :	2/28/14
DESIGN ENGINEER OF RECORD:	H. A. LOCKLEAR	DATE :	6/4/14

31-JUL-2014 13:55
R:\Structures\Plans\Str06\U2579B_SD_BM_06.dgn
lsutton