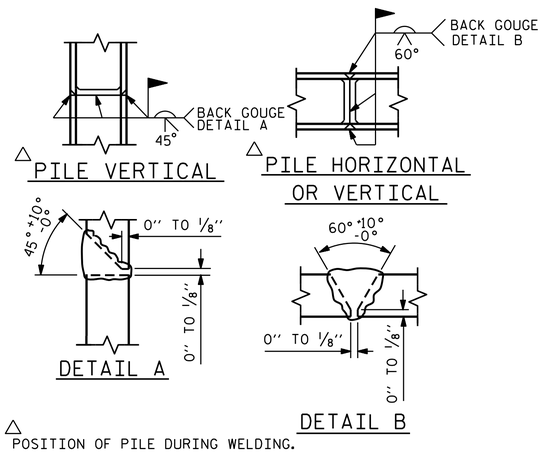

PILE SPLICE DETAILS

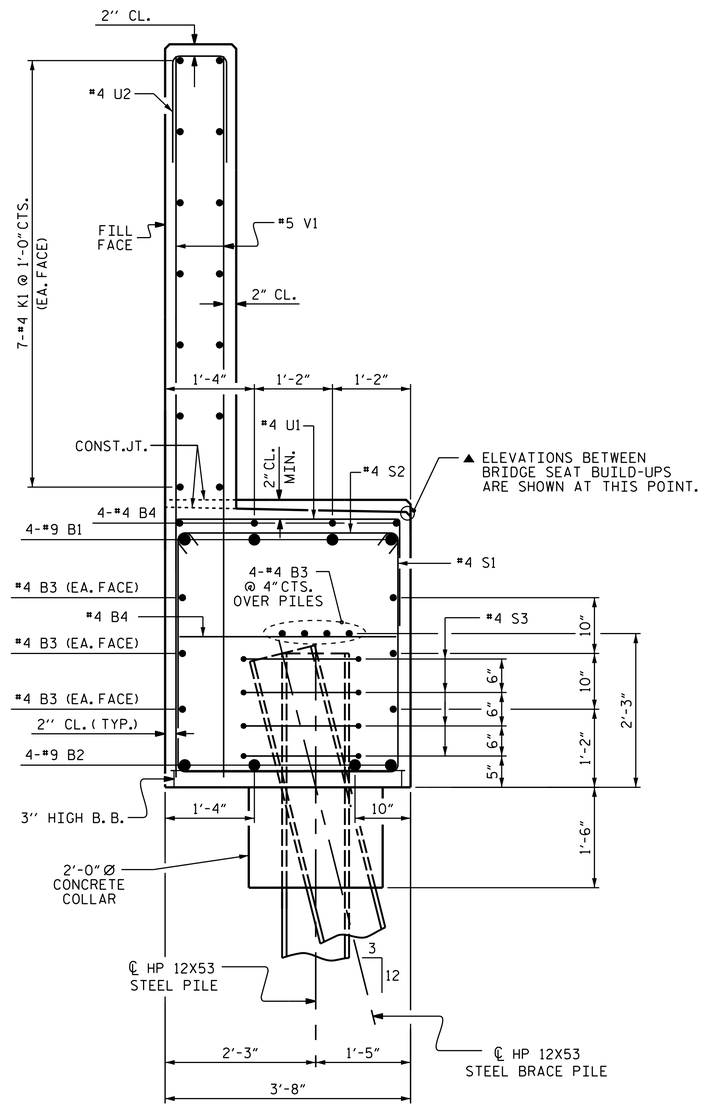

SECTION A-A

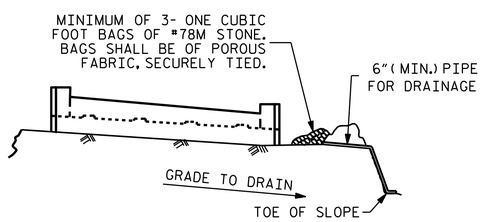

BAGGED STONE AND PIPE SHALL BE PLACED IMMEDIATELY AFTER COMPLETION OF END BENT EXCAVATION. PIPE MAY BE EITHER CONCRETE, CORRUGATED STEEL, CORRUGATED ALUMINUM ALLOY, OR CORRUGATED PLASTIC. PERFORATED PIPE WILL NOT BE ALLOWED.

BAGGED STONE SHALL REMAIN IN PLACE UNTIL THE ENGINEER DIRECTS THAT IT BE REMOVED. THE CONTRACTOR SHALL REMOVE AND DISPOSE OF SILT ACCUMULATIONS AT BAGGED STONE WHEN SO DIRECTED BY THE ENGINEER. BAGS SHALL BE REMOVED AND REPLACED WHENEVER THE ENGINEER DETERMINES THAT THEY HAVE DETERIORATED AND LOST THEIR EFFECTIVENESS.

NO SEPARATE PAYMENT WILL BE MADE FOR THIS WORK AND THE ENTIRE COST OF THIS WORK SHALL BE INCLUDED IN THE UNIT CONTRACT PRICE BID FOR THE SEVERAL PAY ITEMS.

TEMPORARY DRAINAGE AT END BENT

BAR TYPES

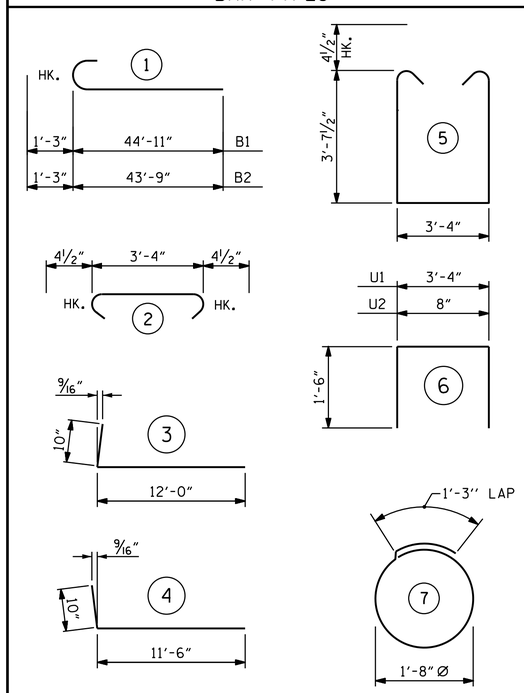

ALL BAR DIMENSIONS ARE OUT TO OUT.

BILL OF MATERIAL

END BENT 1

BAR	NO.	SIZE	TYPE	LENGTH	WEIGHT
B1	8	#9	1	46'-2"	1256
B2	8	#9	1	45'-0"	1224
B3	30	#4	STR	28'-8"	574
B4	53	#4	STR	3'-4"	118
H1	48	#5	3	12'-10"	642
H2	46	#5	4	12'-4"	592
K1	42	#4	STR	28'-8"	804
K2	8	#4	STR	2'-7"	14
S1	102	#4	5	11'-4"	772
S2	102	#4	2	4'-1"	278
S3	44	#4	7	6'-6"	191
U1	24	#4	6	6'-4"	102
U2	76	#4	6	3'-8"	186
V1	152	#5	STR	9'-9"	1546
V2	32	#5	STR	11'-4"	378
V3	30	#5	STR	11'-0"	344

REINFORCING STEEL LBS. 9,021

CLASS A CONCRETE BREAKDOWN

POUR #1 CAP, COLLAR & LOWER PART OF WINGS 50.6 C.Y.

POUR #2 UPPER WINGS & BACKWALL 25.2 C.Y.

CLASS A CONCRETE TOTAL 75.8 C.Y.

HP 12X53 STEEL PILES
NO. 11 1120 LIN. FT.

PROJECT NO. U-2579B
FORSYTH COUNTY
STATION: 584+36.24 -L-

SHEET 3 OF 3

STATE OF NORTH CAROLINA
DEPARTMENT OF TRANSPORTATION
RALEIGH

SUBSTRUCTURE

END BENT 1

(RIGHT LANE)

NORTH CAROLINA PROFESSIONAL SEAL 23371 ENGINEER VIPUL A. PATEL

DocuSigned by: Vipul A. Patel 1C157DE15D464AA... 8/1/2014

REVISIONS						SHEET NO.
NO.	BY:	DATE:	NO.	BY:	DATE:	S-206
1			3			TOTAL SHEETS
2			4			707

STR. #6

DRAWN BY :	T. H. CARROLL	DATE :	2/4/14
CHECKED BY :	K. D. LAYNE	DATE :	2/13/14
DESIGN ENGINEER OF RECORD :	H. A. LOCKLEAR	DATE :	6/4/14

30-JUL-2014 12:59
R:\Structures\Plans\Str06\U2579B_SD_E1_06.dgn
lsutton