NOTES

HOOKS ON "V" BARS MAY BE TURNED AS NECESSARY FOR PLACING REINFORCING STEEL.

STIRRUPS IN CAP MAY BE SHIFTED AS NECESSARY TO CLEAR ANCHOR BOLTS.

FOR PILE SPLICE DETAILS, SEE END BENT 1 SHEET 3 OF 3.

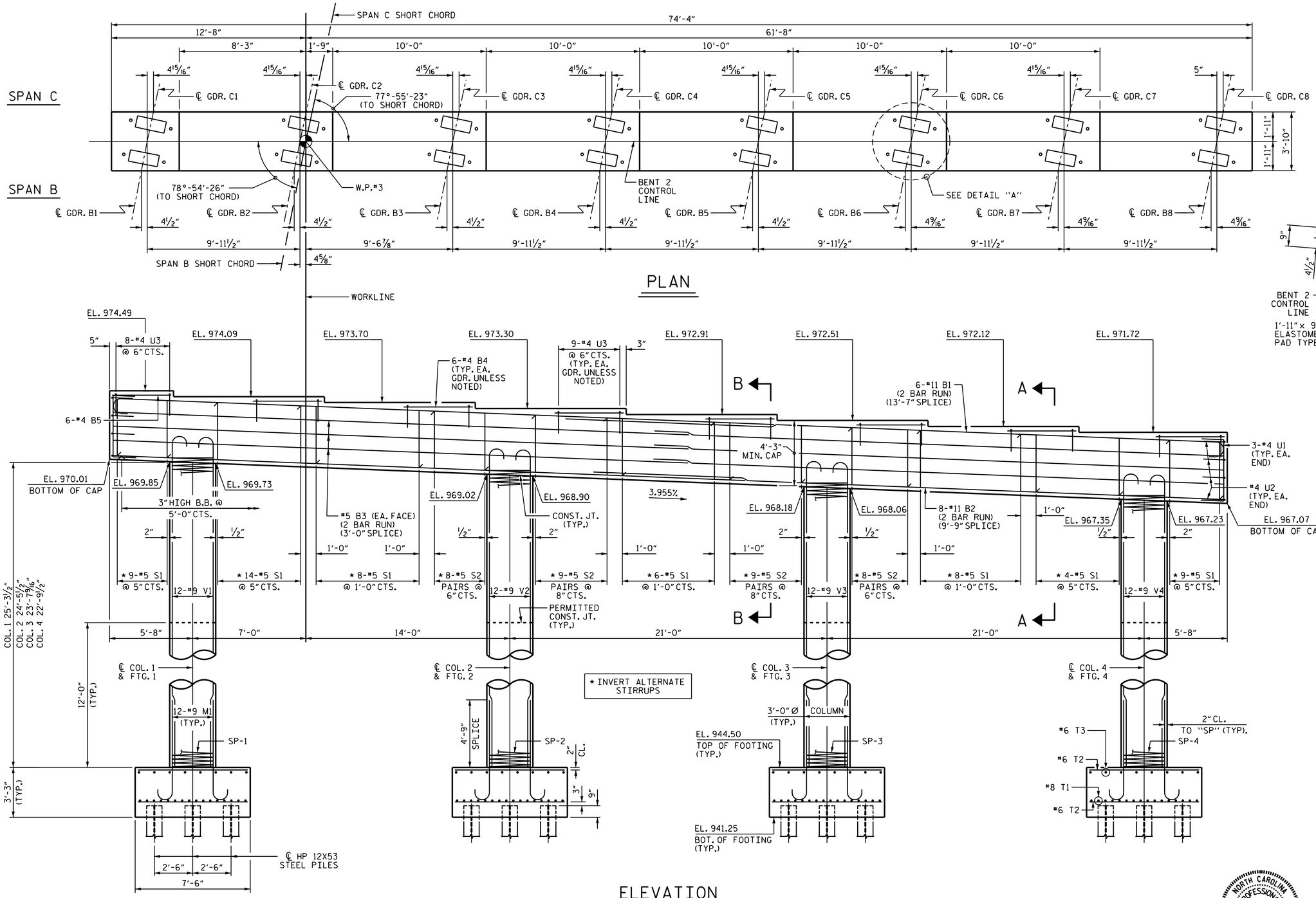

ELEVATION

REINFORCING STEEL, DIMENSIONS AND DETAILS ARE TYPICAL FOR EACH COLUMN AND FOOTING UNLESS OTHERWISE NOTED.

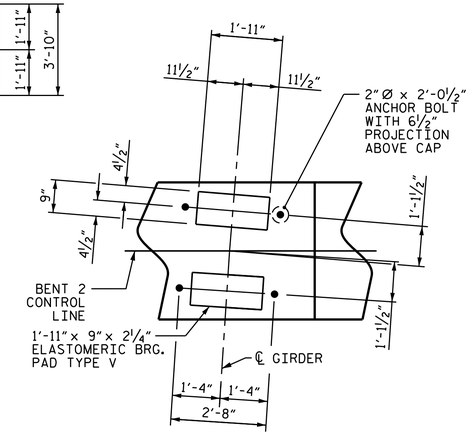

DETAIL "A"

(TYP. EA. GIRDER)

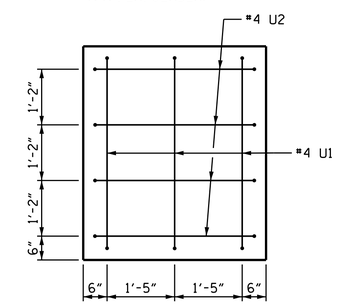

END VIEW

PROJECT NO. U-2579B

FORSYTH COUNTY

STATION: 584+36.24 -L-

SHEET 1 OF 2

STATE OF NORTH CAROLINA
DEPARTMENT OF TRANSPORTATION
RALEIGH

SUBSTRUCTURE

BENT 2

(RIGHT LANE)

NORTH CAROLINA PROFESSIONAL SEAL 23371 ENGINEER VIPUL A. PATEL

DocuSigned by: Vipul A. Patel 1C157DE15D464AA... 8/1/2014

REVISIONS						SHEET NO.
NO.	BY:	DATE:	NO.	BY:	DATE:	S-209
1			3			TOTAL SHEETS
2			4			707

STR. #6

DRAWN BY :	M.E.GILES	DATE :	2/6/14
CHECKED BY :	P.S. ADKINS	DATE :	2/21/14
DESIGN ENGINEER OF RECORD:	H.A. LOCKLEAR	DATE :	6/4/14

30-JUL-2014 12:59
R:\Structures\Plans\Str06\U2579B_SD_B*_06.dgn
lsutton