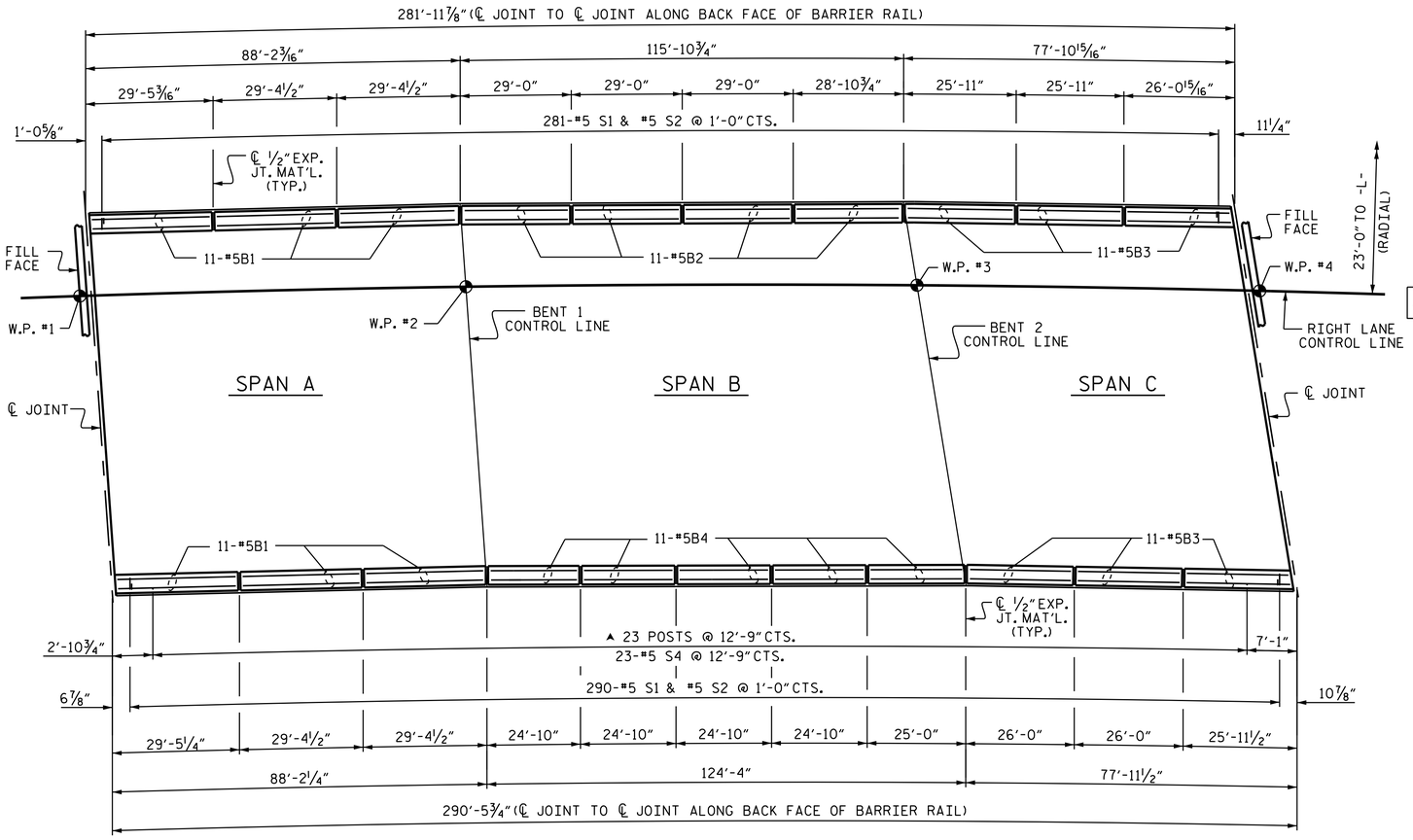

PLAN OF BARRIER RAIL

NOTES

THE BARRIER RAIL IN A CONTINUOUS UNIT SHALL NOT BE CAST UNTIL ALL SLAB CONCRETE IN THAT SPAN HAS BEEN CAST AND HAS REACHED A MINIMUM COMPRESSIVE STRENGTH OF 3,000 PSI.

ALL REINFORCING STEEL IN BARRIER RAILS SHALL BE EPOXY COATED.

GROOVED CONTRACTION JOINTS, ½" IN DEPTH, SHALL BE TOOLED IN ALL EXPOSED FACES OF THE BARRIER RAIL AND IN ACCORDANCE WITH ARTICLE 825-10(B) OF THE STANDARD SPECIFICATIONS. THE CONTRACTION JOINT SHALL BE LOCATED AT EACH THIRD POINT BETWEEN BARRIER RAIL EXPANSION JOINTS. ONLY ONE CONTRACTION JOINT IS REQUIRED AT MIDPOINT OF BARRIER RAIL SEGMENTS LESS THAN 20 FEET IN LENGTH AND NO CONTRACTION JOINTS ARE REQUIRED FOR THOSE SEGMENTS LESS THAN 10 FEET IN LENGTH.

#5 S1 AND #5 S2 BARS MAY BE SHIFTED, SLIGHTLY, AS NECESSARY TO ACCOMMODATE POSTS AND AVOID ½" EXPANSION JOINT MATERIAL.

▲ SEE "SOUND BARRIER WALL LAYOUT & DETAILS" SHEET.

BAR TYPES

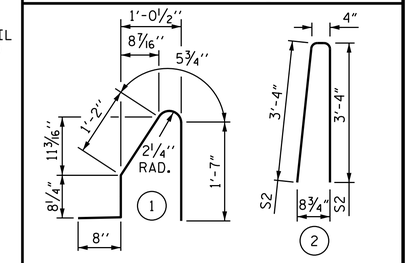

ALL BAR DIMENSIONS ARE OUT TO OUT.

BILL OF MATERIAL

FOR CONCRETE BARRIER RAIL ONLY

BAR	NO.	SIZE	TYPE	LENGTH	WEIGHT
✱ B1	66	#5	STR	28'-11"	1991
✱ B2	44	#5	STR	28'-5"	1304
✱ B3	66	#5	STR	25'-6"	1755
✱ B4	55	#5	STR	24'-5"	1401
✱ S1	571	#5	1	4'-7"	2730
✱ S2	571	#5	2	7'-0"	4169
✱ S4	23	#5	STR	3'-9"	90

✱ EPOXY COATED REINFORCING STEEL ✱✱	LBS.	13,440
CLASS AA CONCRETE ✱✱	CU. YDS.	77.9
CONCRETE BARRIER RAIL ✱✱	LIN. FT.	572.47

✱✱ QUANTITIES FOR BARRIER RAIL ON THE APPROACH SLABS ARE NOT INCLUDED. FOR BARRIER RAIL ON APPROACH SLABS, SEE "BRIDGE APPROACH SLAB DETAILS" SHEET 3 OF 3.

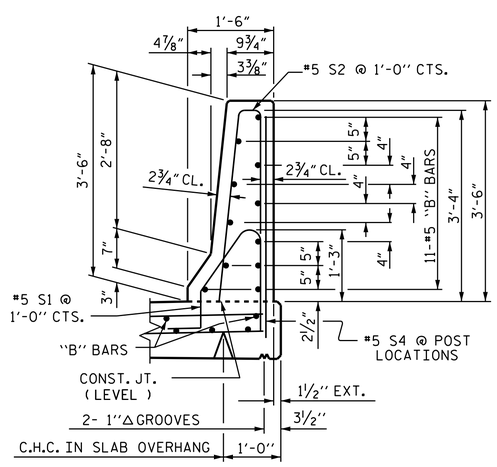

SECTION THRU RAIL

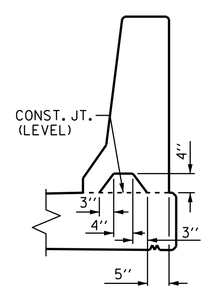

SECTION S-S

AT DAM IN OPEN JOINT (THIS IS TO BE USED ONLY WHEN SLIP FORM IS USED)

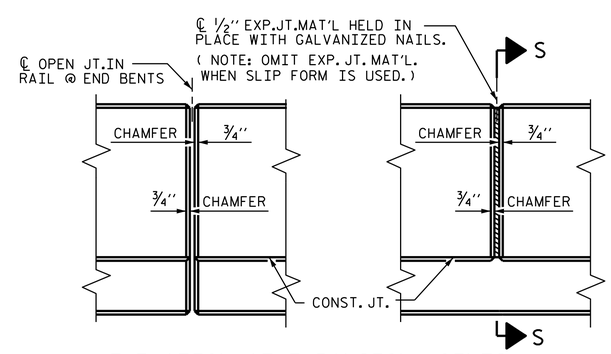

ELEVATION AT EXPANSION JOINTS

BARRIER RAIL DETAILS

PROJECT NO. U-2579B
FORSYTH COUNTY
STATION: 584+36.24 -L-

STATE OF NORTH CAROLINA
DEPARTMENT OF TRANSPORTATION
RALEIGH

STANDARD
CONCRETE BARRIER RAIL

(RIGHT LANE)

NORTH CAROLINA PROFESSIONAL SEAL 23371 ENGINEER VIPUL A. PATEL

DocuSigned by: Vipul A. Patel 1C157DE15D4844A... 8/1/2014

REVISIONS						SHEET NO.
NO.	BY:	DATE:	NO.	BY:	DATE:	S-198
1			3			TOTAL SHEETS
2			4			707

STR. #6 STD. NO. CBR1

ASSEMBLED BY : T. H. CARROLL	DATE : 1/8/14	
CHECKED BY : P. S. ADKINS	DATE : 2/28/14	
DRAWN BY : ARB 5/87	REV. 10/1/11	MAA/GM
CHECKED BY : SJD 9/87	REV. 7/12	MAA/GM
	REV. 6/13	MAA/GM

30-JUL-2014 12:59
R:\Structures\Plans\Str06\U2579B_SD_BR_06.dgn
lsutton