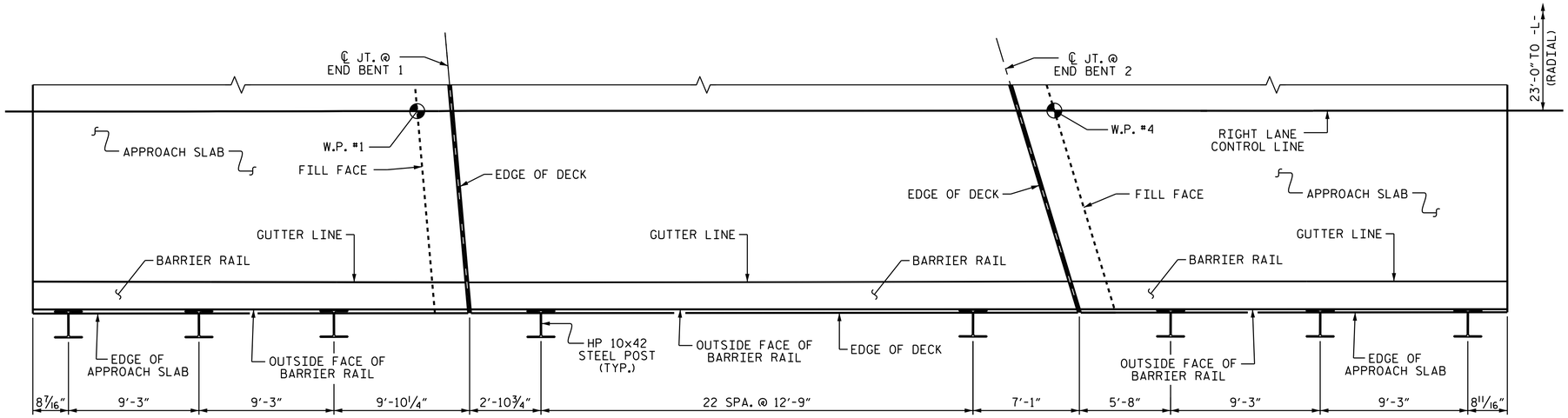

PLAN OF SOUND BARRIER WALL LAYOUT

(PANEL NOT SHOWN FOR CLARITY)

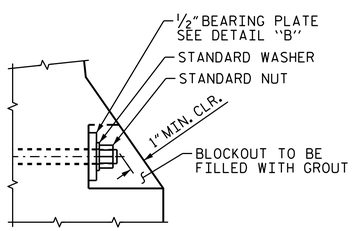

DETAIL "A"

(GROUT SHALL BE IN ACCORDANCE WITH STANDARD SPECIFICATIONS) (LOWER BLOCKOUT SHOWN, UPPER BLOCKOUT SIMILAR)

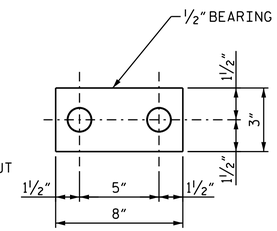

DETAIL "B"

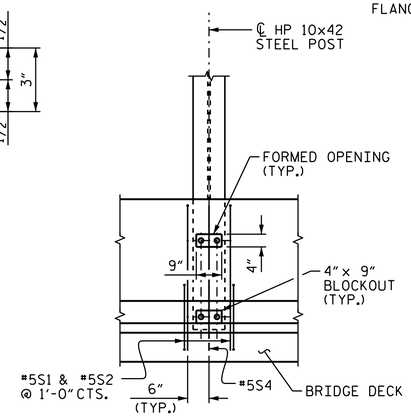

VIEW A-A

(ADJUST #5S1 & #5S2 BAR SPACING AS NECESSARY TO ACCOMMODATE POSTS)

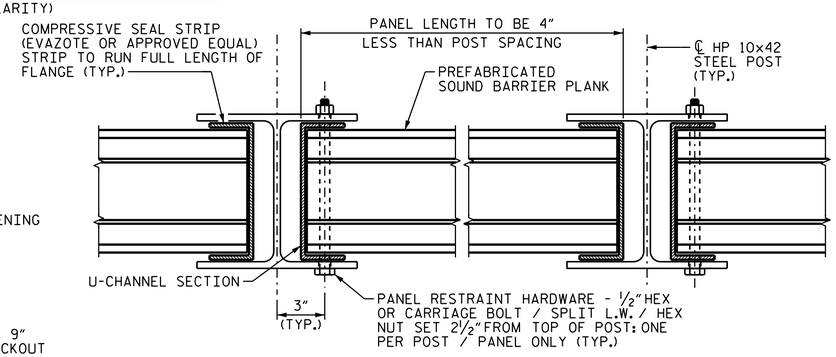

MOUNTING DETAIL - PANEL TYPE 1

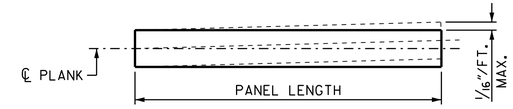

PLANK BOW TOLERANCE

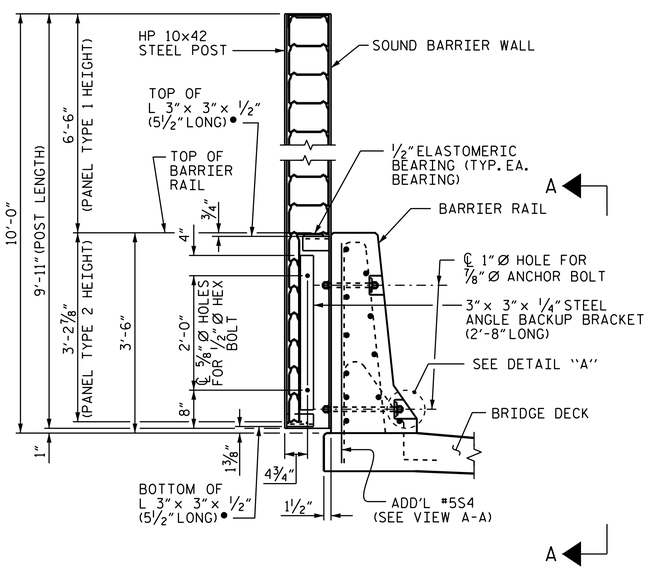

POST ELEVATION

● SEE "SECTION THRU POST" FOR WELD.

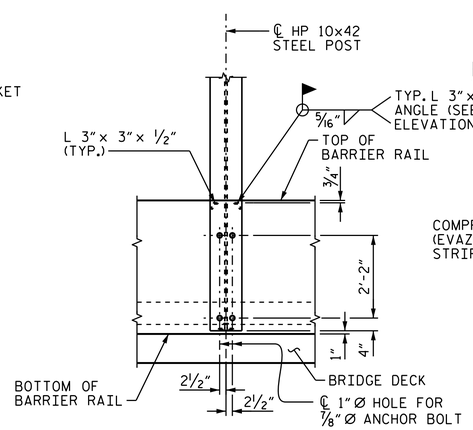

SECTION THRU POST

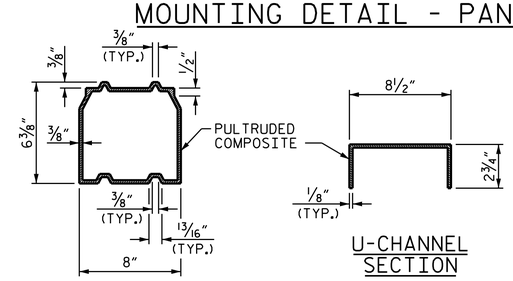

PLANK SECTION

U-CHANNEL SECTION

PANEL TYPE 1

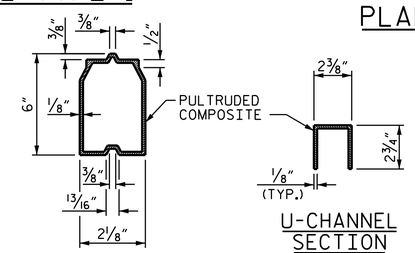

PLANK SECTION

U-CHANNEL SECTION

PANEL TYPE 2

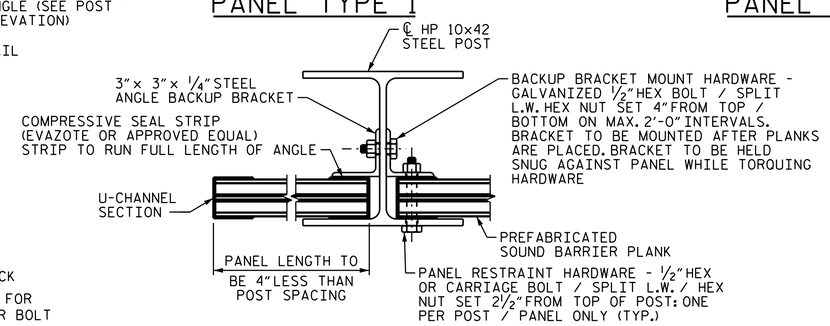

MOUNTING DETAIL - PANEL TYPE 2

NOTES

WALL SUPPORT SYSTEM

POSTS SHALL BE AASHTO 270 GRADE 36 STRUCTURAL STEEL AND SHALL BE GALVANIZED TO AASHTO M111 AND IN ACCORDANCE TO SECTION 1076 OF THE STANDARD SPECIFICATIONS.

BEARING PLATES, BOLTS, NUTS AND WASHERS (EXCLUDING 7/8" Ø ANCHOR BOLTS) SHALL CONFORM TO THE REQUIREMENTS OF ASTM A325 AND SHALL BE GALVANIZED IN ACCORDANCE TO AASHTO M111.

ALL POSTS SHALL BE PLUMB.

SOUND BARRIER WALL

FOR SOUND BARRIER WALL (BRIDGE MOUNTED), SEE SPECIAL PROVISIONS.

COLOR SHALL MATCH THE COLOR ON ADJACENT SOUND BARRIER WALLS AS CLOSELY AS POSSIBLE. FOR ARCHITECTURAL CONCRETE SURFACE TREATMENT, SEE SPECIAL PROVISIONS.

SOUND BARRIER WALL SHALL BE DESIGNED TO WITHSTAND A MINIMUM WIND VELOCITY OF 100 MPH AND A MINIMUM WIND PRESSURE OF 0.04 KSF.

WEIGHT OF SOUND BARRIER WALL SHALL NOT EXCEED 100 LBS/FT.

SOUND BARRIER WALL SHALL CONSIST OF STACKED TONGUE AND GROOVE STRUCTURAL PLANKS AS DETAILED ON PLANS. THE PLANKS SHALL BE COMPRISED OF A PULTRUDED GLASS REINFORCED THERMOSET COMPOSITE STRUCTURAL BOX FILLED WITH RECYCLED TIRE RUBBER OR ANOTHER SUBSTANCE OF COMPARABLE DENSITY AND NOISE REDUCTION CAPABILITY. ENDS SHALL BE CAPPED TO NOT ALLOW FILL MATERIAL TO FALL OUT.

THE MINIMUM LENGTH OF PLANKS SHALL BE 4" LESS THAN THE CLEAR SPACING PROVIDED BETWEEN SUPPORT POSTS. THE MAXIMUM LENGTH OF PLANKS SHALL BE 3" LESS THAN THE CLEAR SPACING PROVIDED BETWEEN SUPPORT POSTS.

PLANKS SHALL BE CUT SO THAT THE ENDS ARE SMOOTH AND PERPENDICULAR TO EACH PLANK'S BASE AND SHALL BE APPROVED BY THE ENGINEER.

EACH PANEL SHALL BE PLACED SO THAT THE TOP OF THE FINISHED PANEL MEETS FLUSH WITH THE TOP OF EACH SUPPORT POST.

FOR ELASTOMERIC BEARINGS, SEE SECTION 1079 OF THE STANDARD SPECIFICATIONS.

PROJECT NO. U-2579B
FORSYTH COUNTY
STATION: 584+36.24 -L-

STATE OF NORTH CAROLINA
DEPARTMENT OF TRANSPORTATION
RALEIGH

SOUND BARRIER WALL LAYOUT & DETAILS

(RIGHT LANE)

REVISIONS								SHEET NO.
NO.	BY:	DATE:	NO.	BY:	DATE:			S-200
1			3					TOTAL SHEETS
2			4					707

STR. #6

NORTH CAROLINA PROFESSIONAL SEAL 23371 ENGINEER VIPUL A. PATEL

DocuSigned by: Vipul A. Patel 1C15TDE15D464AA 8/1/2014

DRAWN BY :	T. H. CARROLL	DATE :	1/30/14
CHECKED BY :	V. A. PATEL	DATE :	5/8/14
DESIGN ENGINEER OF RECORD:	V. A. PATEL	DATE :	6/10/14

31-JUL-2014 17:16
R:\Structures\Plans\Str06\U2579B_SD_SBW_06.dgn
lsutton