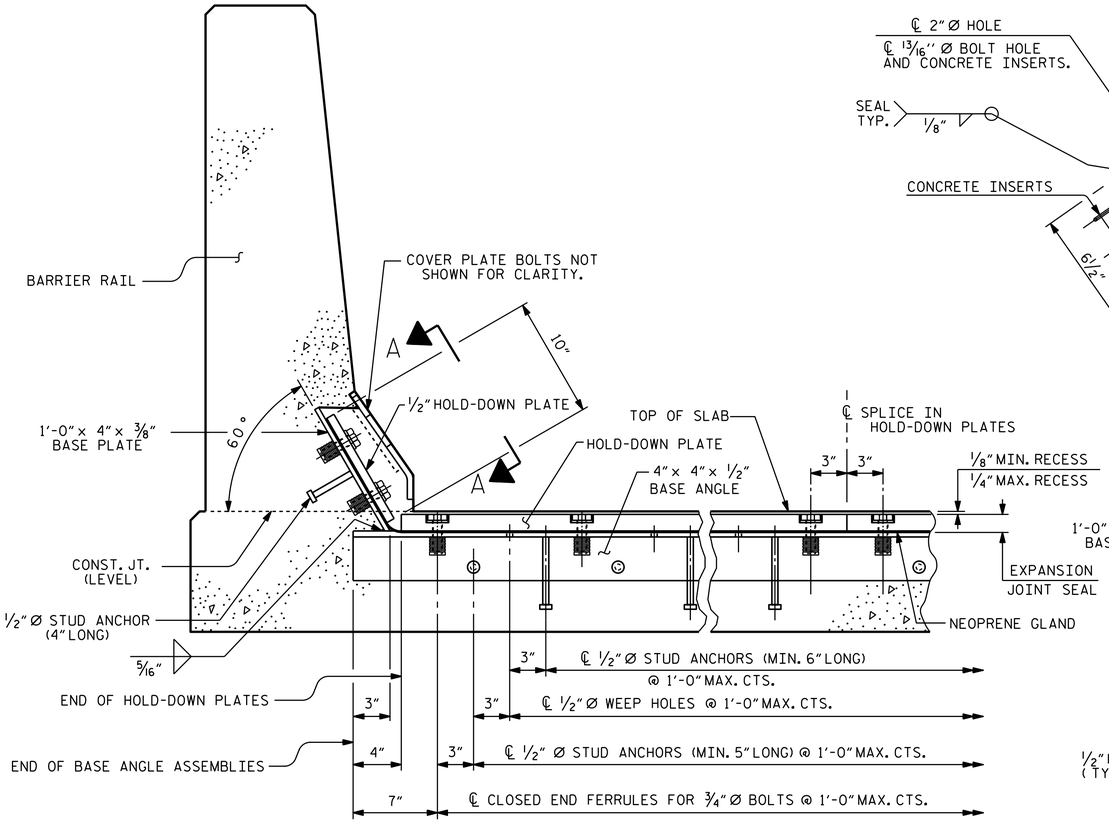

SECTION THRU RAIL NORMAL TO JOINT

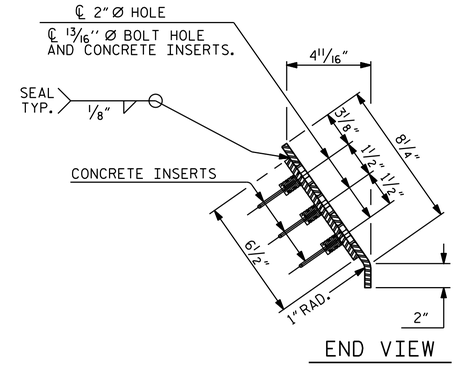

END VIEW

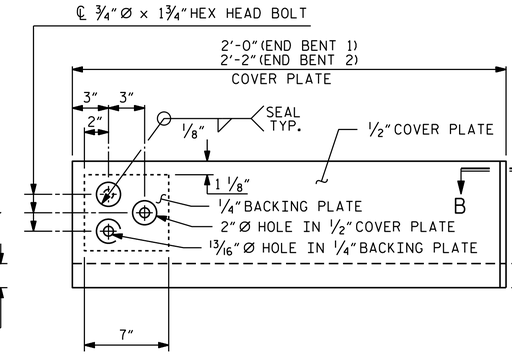

TYPE I - ELEVATION VIEW

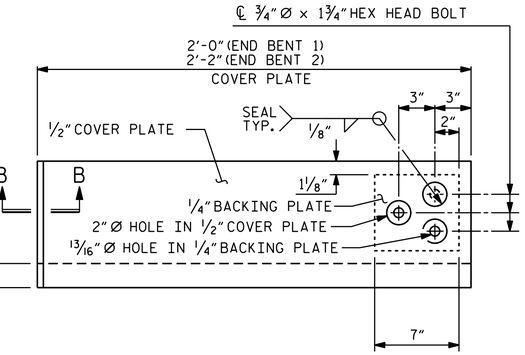

TYPE II - ELEVATION VIEW

COVER PLATE DETAILS

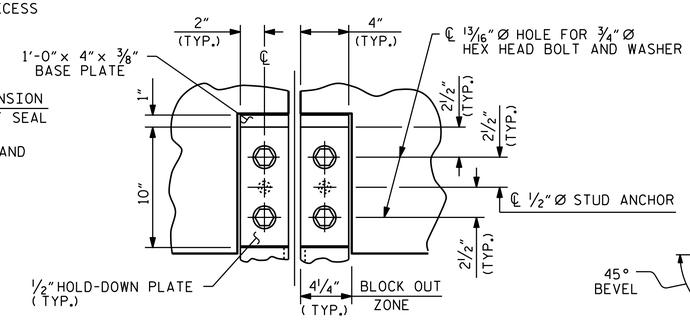

SECTION A - A

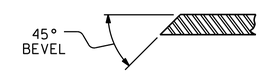

SECTION B - B

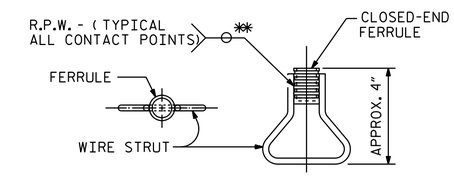

CONCRETE INSERT

** EACH WELDED ATTACHMENT OF WIRE TO FERRULE SHALL DEVELOP THE TENSILE STRENGTH OF THE WIRE.

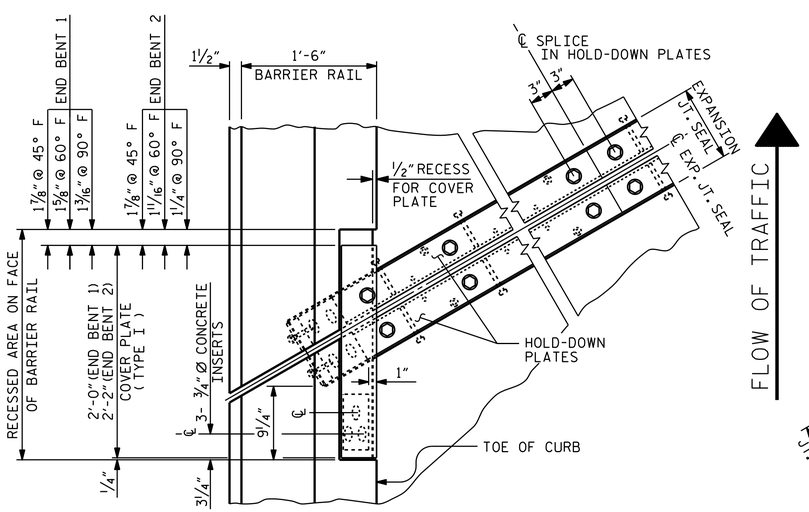

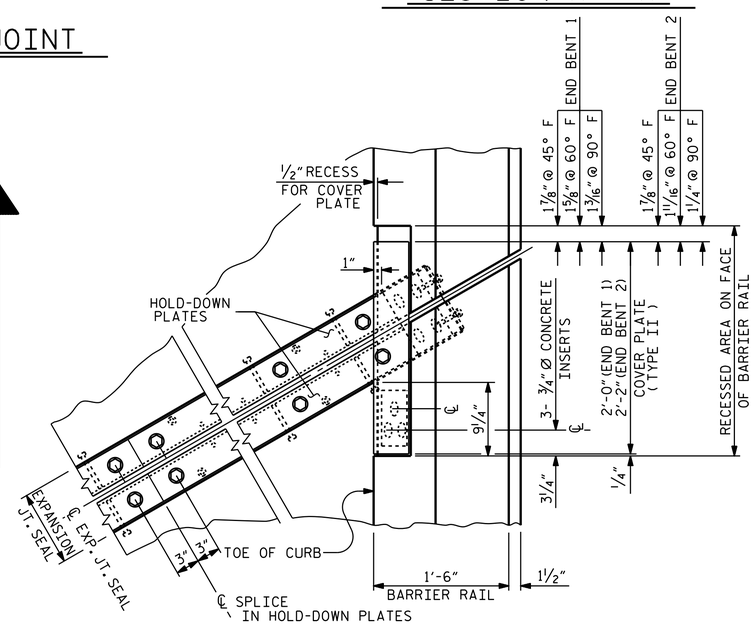

PLAN OF EXPANSION JOINT SEAL

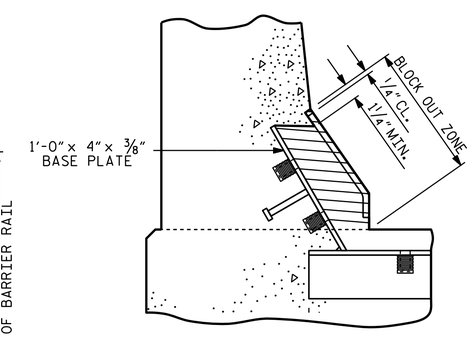

BLOCK OUT DETAIL

SEE "SECTION A - A" FOR OTHER DETAILS.

PROJECT NO. U-2579B
FORSYTH COUNTY
STATION: 584+36.24 -L-

SHEET 2 OF 2

STATE OF NORTH CAROLINA
DEPARTMENT OF TRANSPORTATION
RALEIGH

STANDARD

EXPANSION JOINT SEAL DETAILS FOR BARRIER RAIL

(RIGHT LANE)

NORTH CAROLINA PROFESSIONAL SEAL 23371 ENGINEER VIPUL A. PATEL

DocuSigned by: Vipul A. Patel 1C157DE15D4844A... 8/1/2014

REVISIONS						SHEET NO.
NO.	BY:	DATE:	NO.	BY:	DATE:	S-202
1			3			TOTAL SHEETS
2			4			707

STR. #6

STD. NO. EJS2

ASSEMBLED BY : T. H. CARROLL DATE : 1/3/14
CHECKED BY : P. S. ADKINS DATE : 2/28/14

DRAWN BY : REK 9/87
CHECKED BY : CRK 10/87

REV. 10/1/11 MAA/GM
REV. 7/12 MAA/GM
REV. 6/13 MAA/GM

DESIGN ENGINEER OF RECORD:
H. A. LOCKLEAR DATE : 6/4/14

30-JUL-2014 12:59
R:\Structures\Plans\Str06\U2579B_SD_JS_06.dgn
lsutton