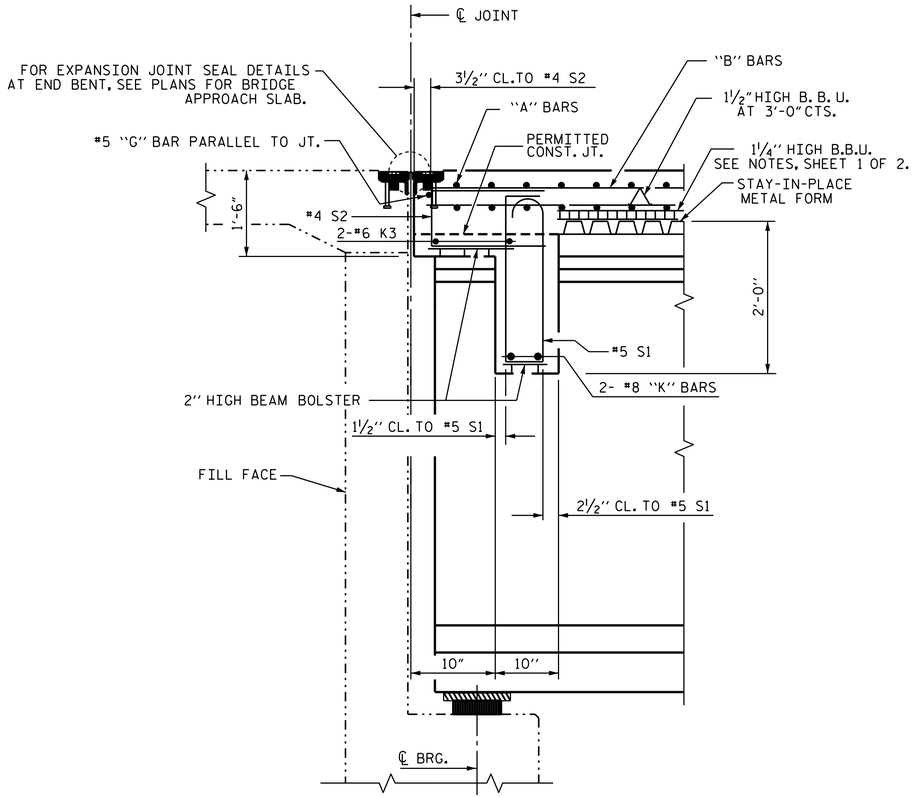

SECTION THRU END BENT DIAPHRAGM

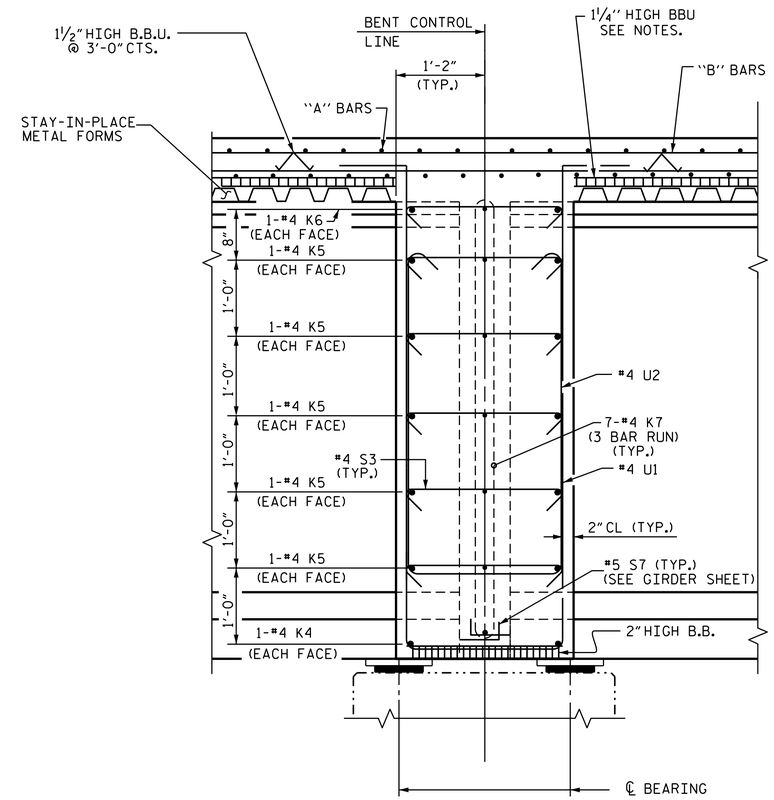

SECTION THRU BENT DIAPHRAGM

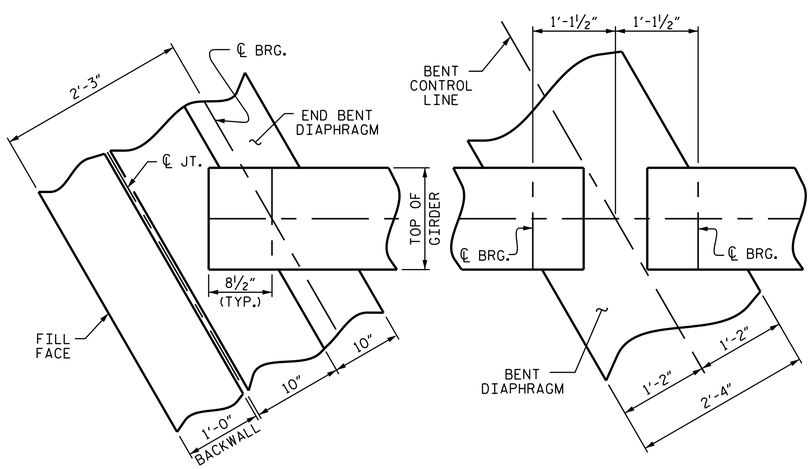

AT END BENT

AT BENT

PLAN OF DIAPHRAGMS

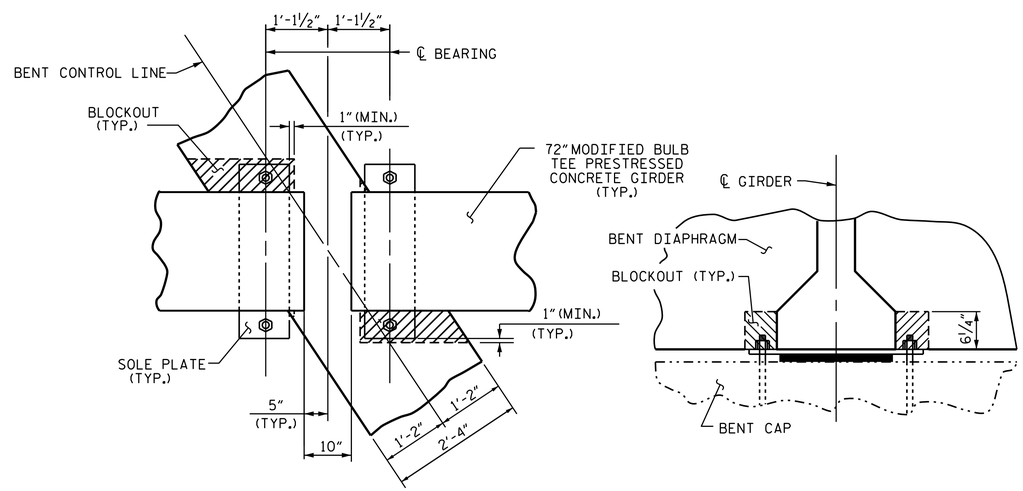

PLAN

SECTION

BENT DIAPHRAGM BLOCK-OUT DETAIL

NORTH CAROLINA PROFESSIONAL SEAL 23371 ENGINEER VIPUL A. PATEL

DocuSigned by: Vipul A. Patel 1C157DE15D464AA... 8/1/2014

PROJECT NO. U-2579B

FORSYTH COUNTY

STATION: 584+36.24 -L-

SHEET 2 OF 2

STATE OF NORTH CAROLINA
DEPARTMENT OF TRANSPORTATION
RALEIGH

SUPERSTRUCTURE

TYPICAL SECTION

(RIGHT LANE)

REVISIONS						SHEET NO.
NO.	BY:	DATE:	NO.	BY:	DATE:	S-185
1			3			TOTAL SHEETS
2			4			707

STR. #6

DRAWN BY : T. H. CARROLL DATE : 10/08/13
CHECKED BY : P. S. ADKINS DATE : 2/28/14
DESIGN ENGINEER OF RECORD: H. A. LOCKLEAR DATE : 06/4/14

30-JUL-2014 12:58
R:\Structures\Plans\Str06\U2579B_SD_TS_06.dgn
lsutton