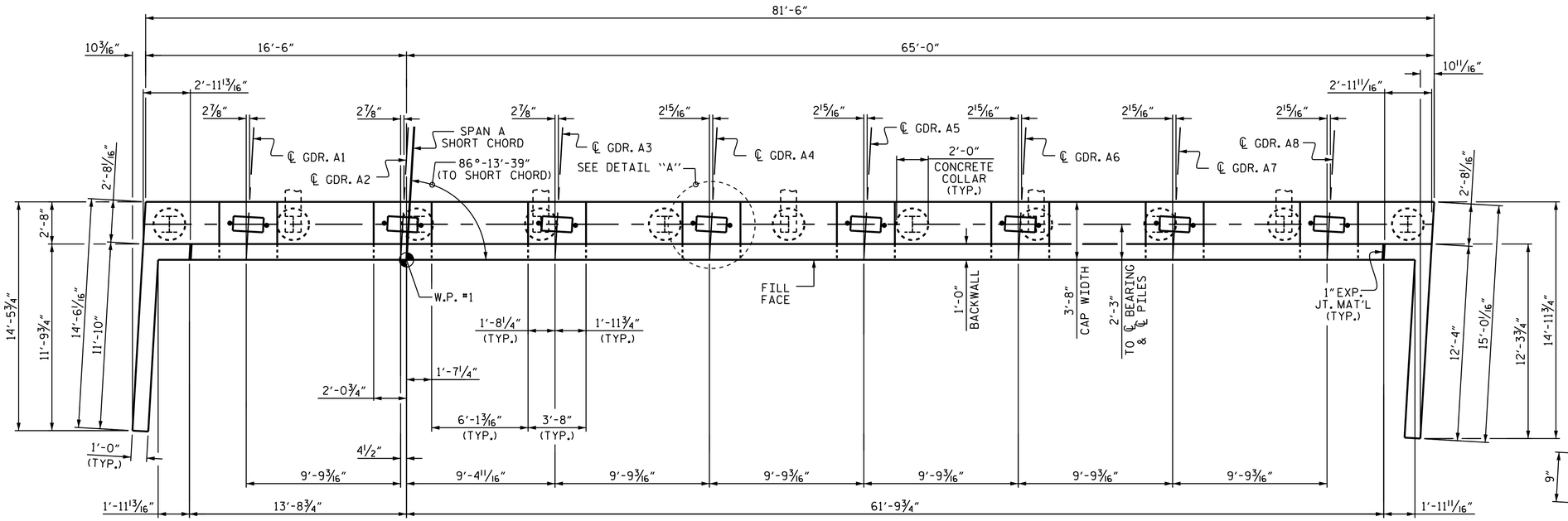

PLAN

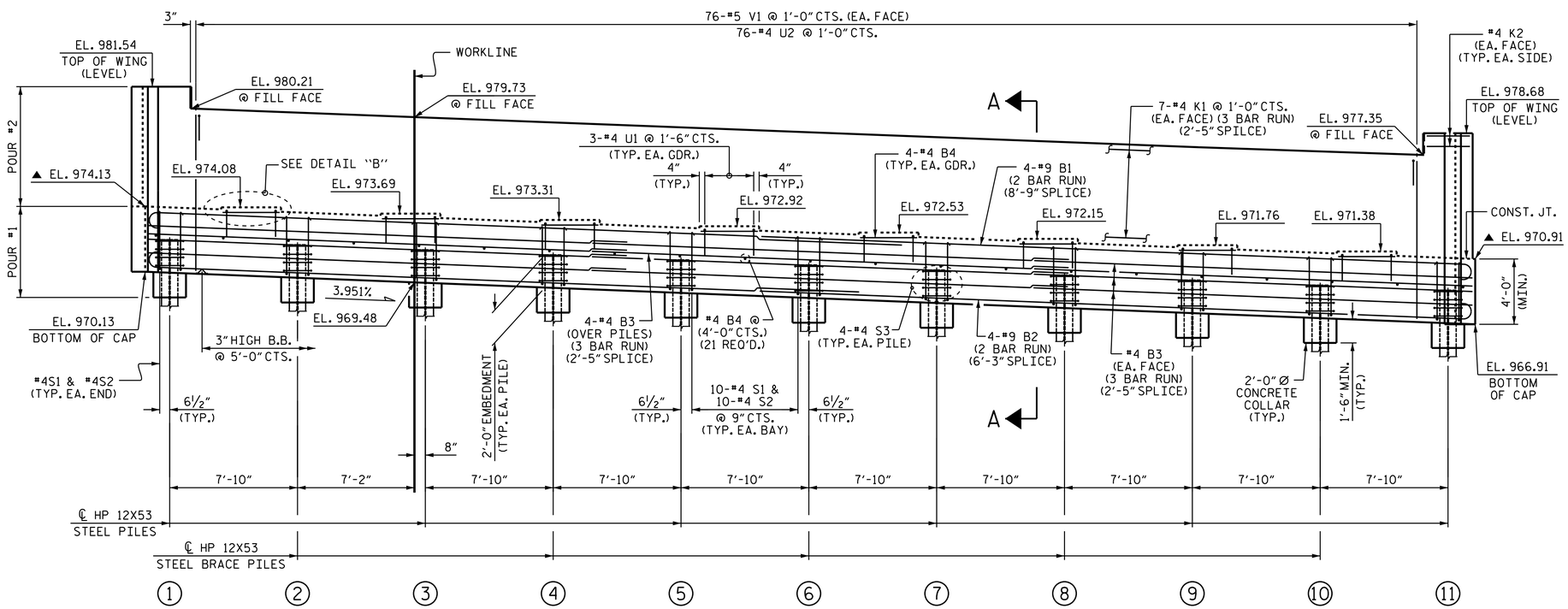

ELEVATION

▲ SEE SHEET 3 OF 3 FOR LOCATION OF ELEVATION BETWEEN BRIDGE SEAT BUILD-UPS.

NOTES

STIRRUPS IN CAP MAY BE SHIFTED AS NECESSARY TO CLEAR ANCHOR BOLTS.

BACKWALL SHALL BE PLACED BEFORE APPLYING THE EPOXY PROTECTIVE COATING.

▲ THE TOP SURFACE AREAS OF THE END BENT CAP SHALL BE CURED IN ACCORDANCE WITH THE STANDARD SPECIFICATIONS EXCEPT THE MEMBRANE CURING COMPOUND METHOD SHALL NOT BE USED.

THE TOP SURFACE OF THE CAP EXCEPT THE BRIDGE SEAT BUILDUPS SHALL BE SLOPED TRANSVERSELY FROM THE FILL FACE TO THE BACK FACE AT THE RATE OF 2%.

INSTALL THE 4" DIA. DRAIN PIPE THROUGH THE WING WALL AS REQUIRED FOR REINFORCED BRIDGE APPROACH FILLS, SEE THE ROADWAY PLANS. REINFORCING STEEL IN THE WING WALL MAY BE SHIFTED AS NECESSARY TO CLEAR THE DRAIN PIPE.

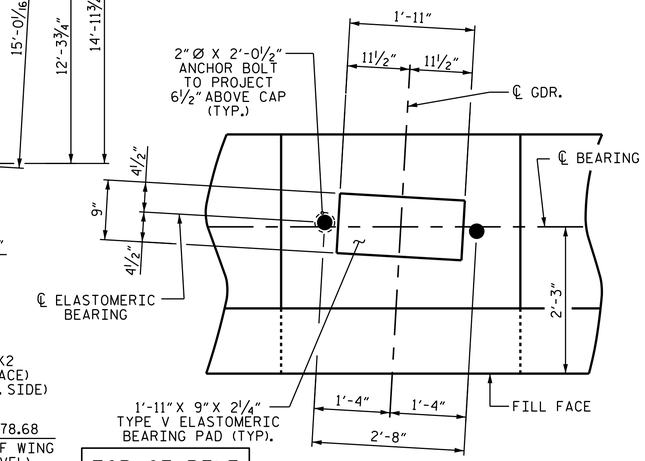

DETAIL "A"

(TYP. EA. GDR.)

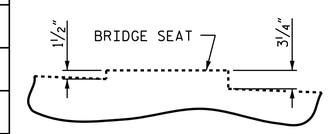

DETAIL "B"

(TYP. EA. BRIDGE SEAT)

TOP OF PILE ELEVATIONS	
1	EL. 972.09
2	EL. 971.78
3	EL. 971.47
4	EL. 971.16
5	EL. 970.85
6	EL. 970.54
7	EL. 970.23
8	EL. 969.92
9	EL. 969.61
10	EL. 969.30
11	EL. 968.99

PROJECT NO. U-2579B

FORSYTH COUNTY

STATION: 584+36.24 -L-

SHEET 1 OF 3

STATE OF NORTH CAROLINA
DEPARTMENT OF TRANSPORTATION
RALEIGH

SUBSTRUCTURE

END BENT 1

(RIGHT LANE)

NORTH CAROLINA PROFESSIONAL SEAL 23371 ENGINEER VIPUL A. PATEL

DocuSigned by: Vipul A. Patel 1C157DE15D464AA... 8/1/2014

REVISIONS						SHEET NO.
NO.	BY:	DATE:	NO.	BY:	DATE:	S-204
1			3			TOTAL SHEETS
2			4			707

STR. #6

DRAWN BY :	T. H. CARROLL	DATE :	1/31/14
CHECKED BY :	K. D. LAYNE	DATE :	2/13/14
DESIGN ENGINEER OF RECORD:	H. A. LOCKLEAR	DATE :	6/4/14

30-JUL-2014 12:59
R:\Structures\Plans\Str06\U2579B_SD_E1_06.dgn
lsutton