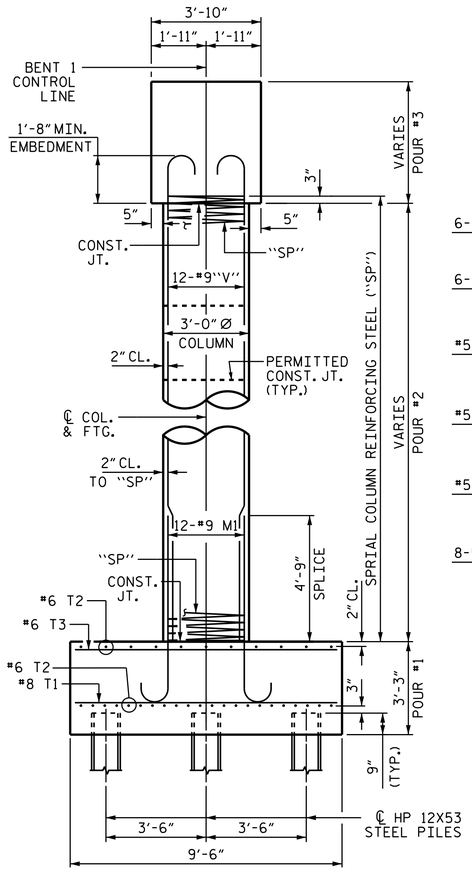

END VIEW

REINFORCING STEEL, DIMENSIONS, AND DETAILS ARE TYPICAL FOR EACH COLUMN AND FOOTING UNLESS OTHERWISE NOTED

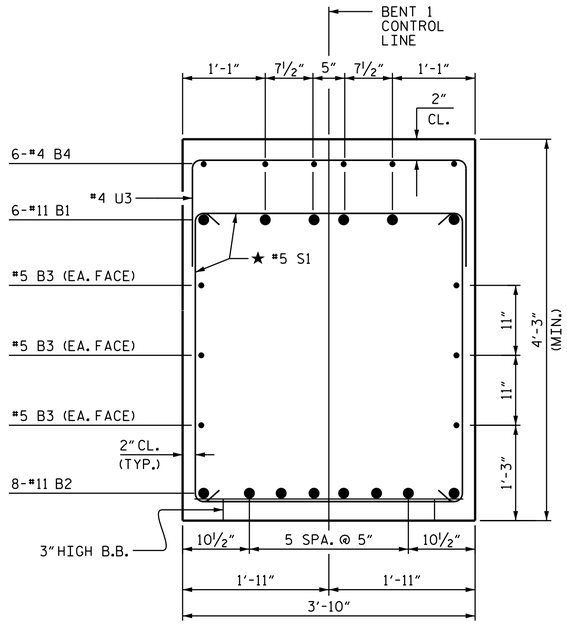

SECTION A-A

★ INVERT ALTERNATE STIRRUPS

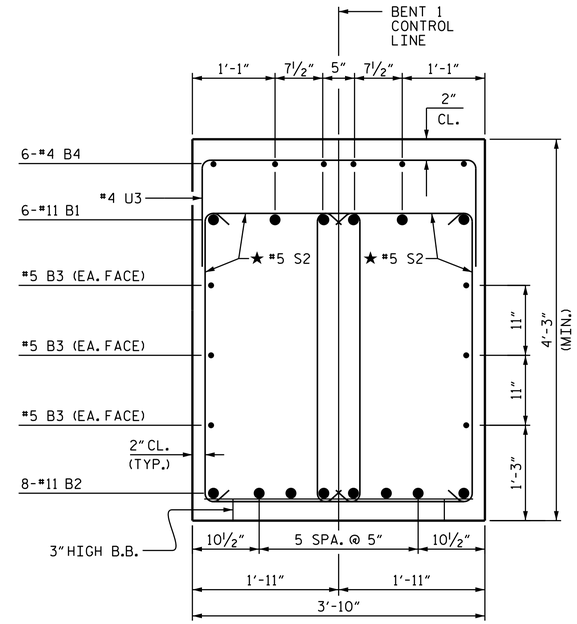

SECTION B-B

★ INVERT ALTERNATE STIRRUPS

BAR TYPES

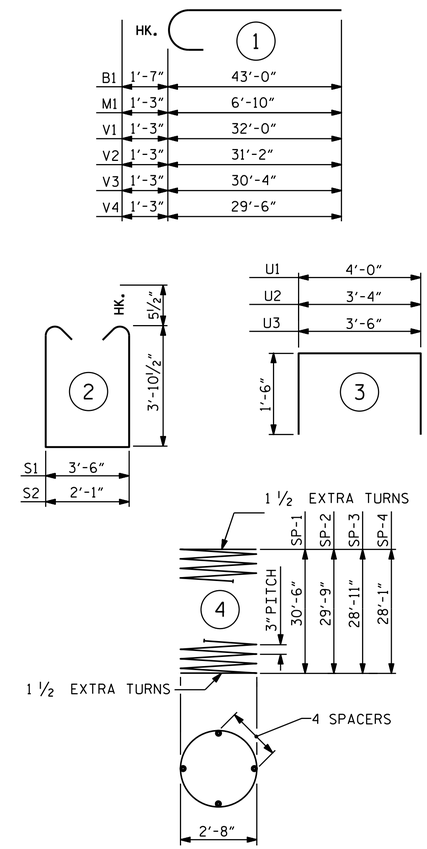

ALL BAR DIMENSIONS ARE OUT TO OUT.

BILL OF MATERIAL

BENT 1

BAR	NO.	SIZE	TYPE	LENGTH	WEIGHT
B1	12	#11	1	44'-7"	2842
B2	16	#11	STR	41'-2"	3499
B3	12	#5	STR	37'-9"	472
B4	42	#4	STR	4'-6"	126
B5	6	#4	STR	3'-10"	15
M1	48	#9	1	8'-1"	1319
S1	69	#5	2	12'-2"	876
S2	60	#5	2	10'-9"	673
T1	64	#8	STR	9'-0"	1538
T2	132	#6	STR	7'-0"	1388
T3	32	#6	STR	9'-0"	433
U1	6	#4	3	7'-0"	28
U2	8	#4	3	6'-4"	34
U3	71	#4	3	6'-6"	308
V1	12	#9	1	33-3"	1357
V2	12	#9	1	32-5"	1323
V3	12	#9	1	31-7"	1289
V4	12	#9	1	30-9"	1255
REINFORCING STEEL				LBS.	18,775
SP-1	1	**	4	1031'-4"	689
SP-2	1	**	4	1006'-7"	672
SP-3	1	**	4	979'-9"	654
SP-4	1	**	4	953'-0"	637
SPIRAL COLUMN REINFORCING STEEL				LBS.	2,652

CLASS A CONCRETE BREAKDOWN:

POUR #1 (FOOTINGS)	C.Y.	34.3
POUR #2 (COLUMNS)	C.Y.	30.4
POUR #3 (CAP)	C.Y.	46.1
TOTAL CLASS A CONCRETE	C.Y.	110.8

FOUNDATION EXCAVATION — LUMP SUM

HP 12X53 STEEL PILES — No. 28 — LIN. FT. — 1,785

** THE "SP" SPIRAL REINFORCING STEEL SHALL BE W-20 OR D-20 COLD DRAWN WIRE OR #4 PLAIN OR DEFORMED BAR.

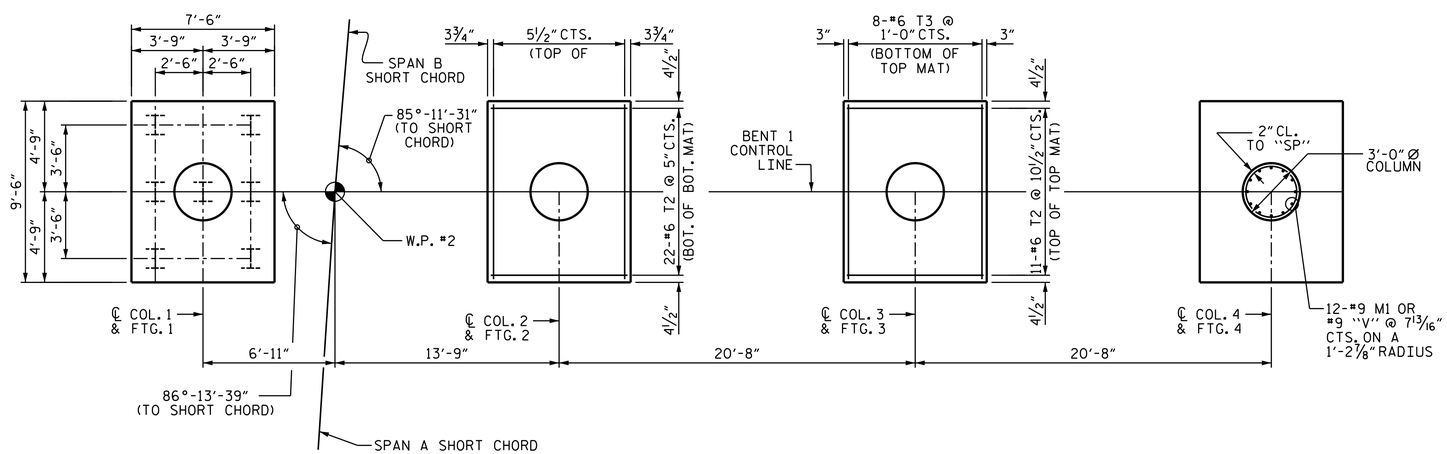

PLAN OF FOOTINGS & COLUMNS

REINFORCING STEEL, DIMENSIONS AND DETAILS ARE TYPICAL FOR EACH COLUMN AND FOOTING UNLESS OTHERWISE NOTED

PROJECT NO. U-2579B
FORSYTH COUNTY
STATION: 584+36.24 -L-

SHEET 2 OF 2

STATE OF NORTH CAROLINA
DEPARTMENT OF TRANSPORTATION
RALEIGH

SUBSTRUCTURE

BENT 1

(RIGHT LANE)

NORTH CAROLINA PROFESSIONAL SEAL 23371 ENGINEER VIPUL A. PATEL

DocuSigned by: Vipul A. Patel 1C157DE15D464AA... 8/4/2014

REVISIONS						SHEET NO.
NO.	BY:	DATE:	NO.	BY:	DATE:	S-208
1			3			TOTAL SHEETS
2			4			707

STR. #6

DRAWN BY : M.E. GILES DATE : 2/6/14
CHECKED BY : P.S. ADKINS DATE : 2/21/14
DESIGN ENGINEER OF RECORD: H.A. LOCKLEAR DATE : 6/4/14

04-AUG-2014 13:16
R:\Structures\Plans\Str06\U2579B_SD_B*_06.dgn
lsutton