F.A. PROJECT NO.: NHF-0918(93)

583+00 584+00 585+00 586+00

(+) 3.9665 % (-) 3.9704 %

GRADE DATA -L-

PI = 584+34.00
EL = 1,001.00
VC = 1,962'

HORIZONTAL CURVE DATA -L-

PI STA. 576+22.74
Δ = 58°-09'-46.4" (RT)
D = 0°-59'-53.5"
L = 5,826.87'
T = 3,192.41'
R = 5,740.00'

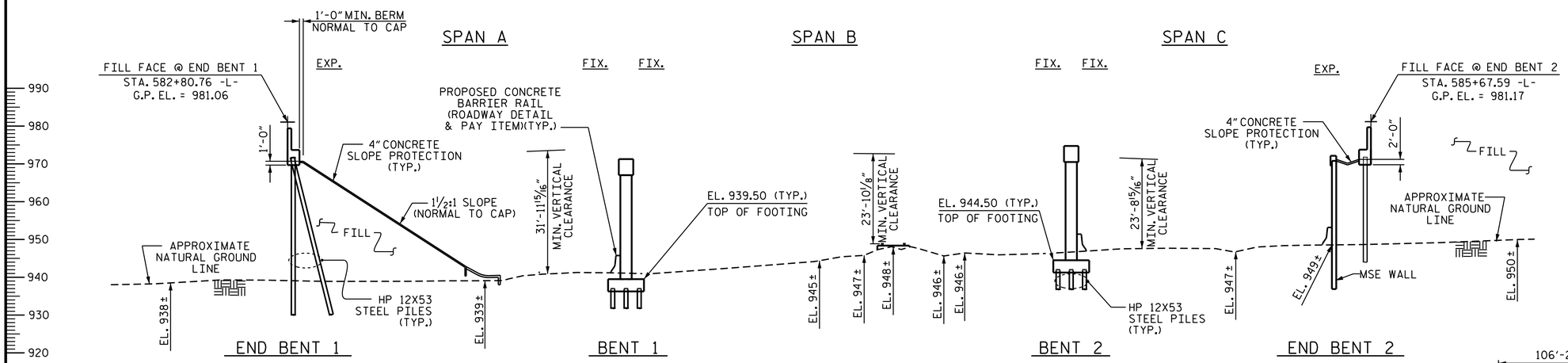

SECTION ALONG RIGHT LANE CONTROL LINE

(BENTS AND END BENTS ARE AT RIGHT ANGLES IN SECTION)

TOP OF RAIL ELEVATIONS		
TRACK -SRR- STATION	EXISTING ELEVATION	
	RIGHT RAIL	LEFT RAIL
34+29.06	947.99	947.96
34+98.64	948.08	948.06
35+12.32	948.10	948.09
35+24.93	948.12	948.11
35+94.54	948.32	948.30

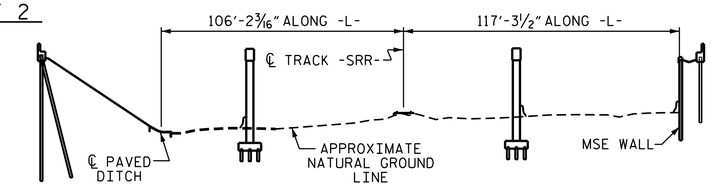

SECTION THRU RAILROAD

(LOOKING DOWNSTATION ALONG TRACK -SRR-)

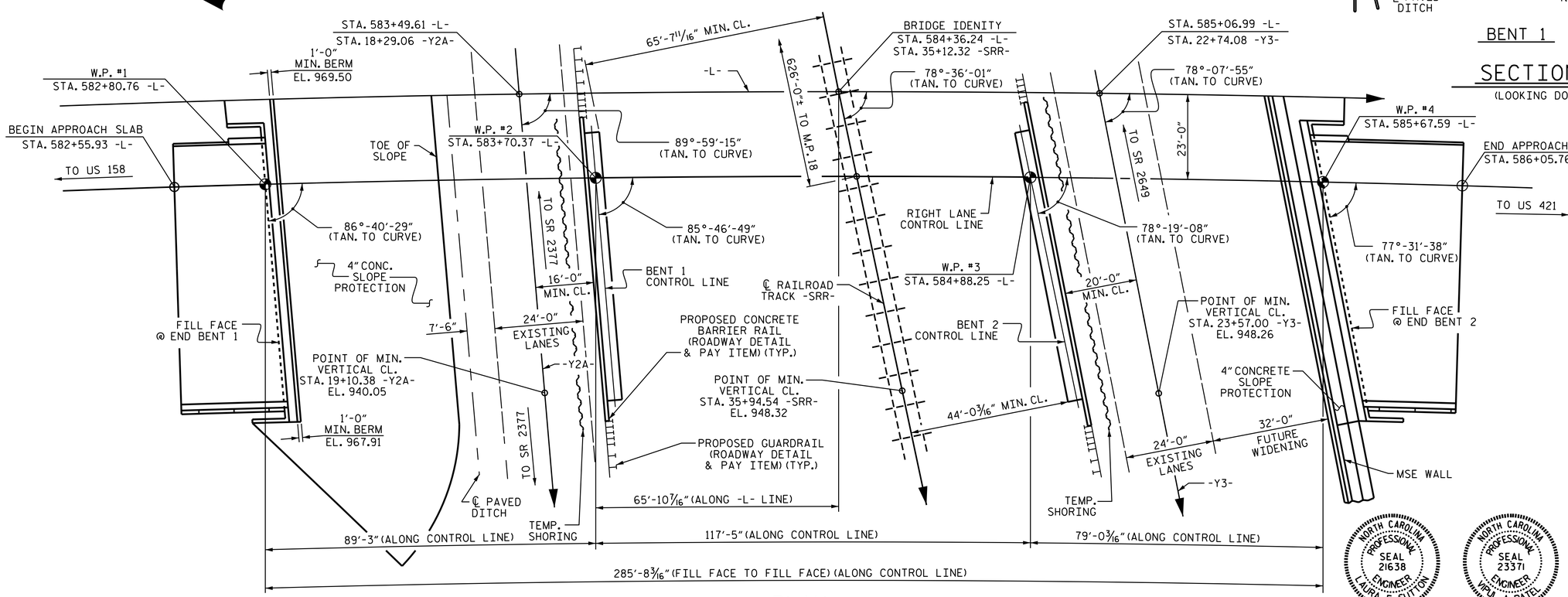

PLAN

(PILES, COLUMNS & FOOTINGS NOT SHOWN FOR CLARITY)

PROJECT NO. U-2579B
FORSYTH COUNTY
STATION: 584+36.24 -L-
35+12.32 -SRR-

SHEET 1 OF 4 BRIDGE #671, MILE POST K-18.1

STATE OF NORTH CAROLINA
DEPARTMENT OF TRANSPORTATION
RALEIGH

GENERAL DRAWING

FOR BRIDGE OVER PISGAH CHURCH ROAD, NORFOLK SOUTHERN RAILROAD AND WEST MOUNTAIN ROAD ON WINSTON SALEM NORTHERN BELTWAY BETWEEN US 158 AND US 421 (RIGHT LANE)

NORTH CAROLINA PROFESSIONAL SEAL 21638 ENGINEER LAURA E. SUTTON
DocuSigned by: Laura E. Sutton AE35E3E6727640E
7/30/2014

NORTH CAROLINA PROFESSIONAL SEAL 23371 ENGINEER VIPUL A. PATEL
DocuSigned by: Vipul A. Patel 1C157DE15D644AA
8/1/2014

REVISIONS						SHEET NO.
NO.	BY:	DATE:	NO.	BY:	DATE:	S-179
1			3			TOTAL SHEETS
2			4			707

STR. #6

DRAWN BY : J.P. MCCARTHA DATE : 2/10/14
CHECKED BY : R.P. PATEL DATE : 2/21/14
DESIGN ENGINEER OF RECORD: H.A. LOCKLEAR DATE : 5/29/14

30-JUL-2014 12:58
R:\Structures\Plans\Str06\U2579B_SD_GD_06.dgn
lsutton