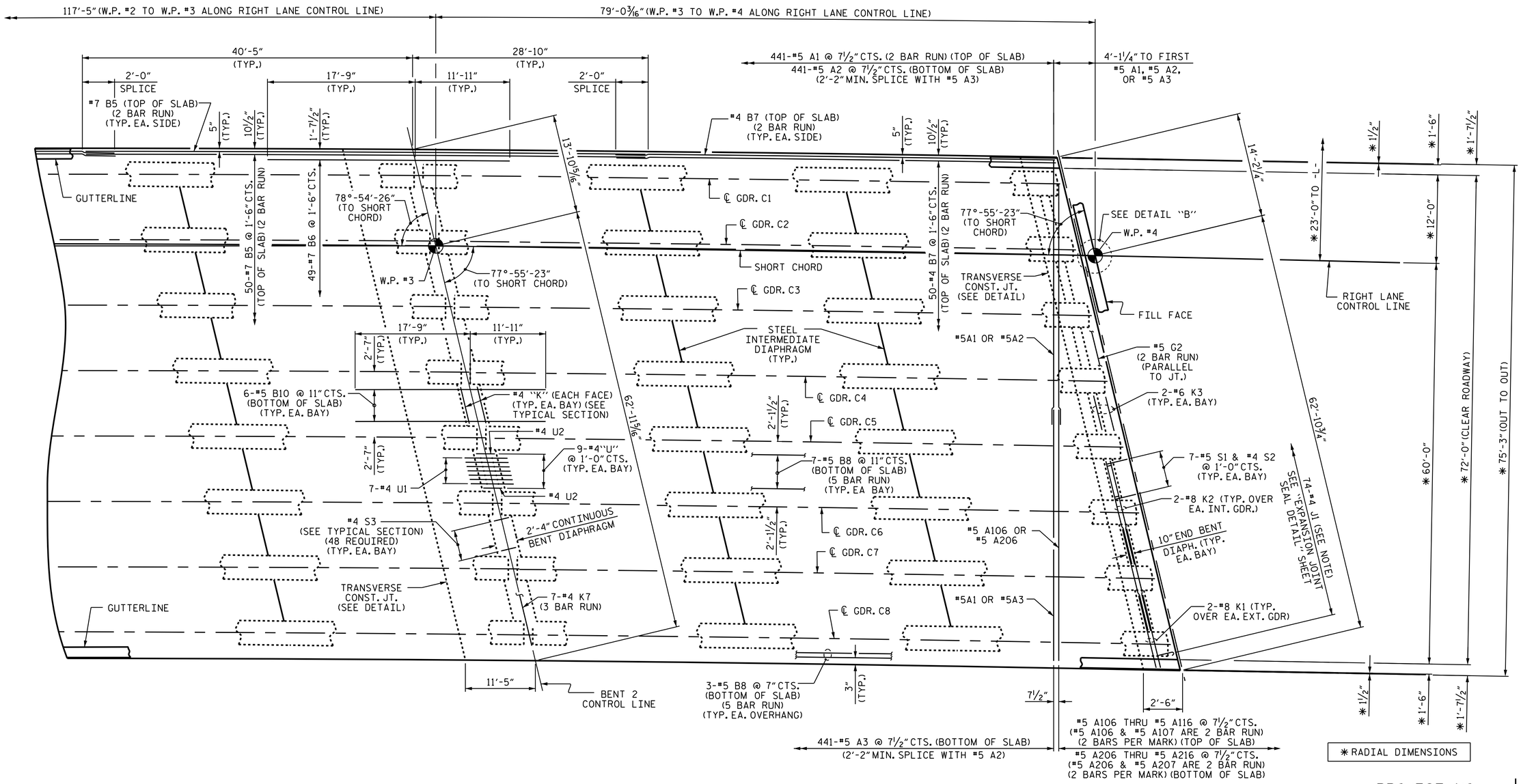

PLAN OF SPAN C

"A" BARS ARE SPACED ALONG AND PERPENDICULAR TO LONG CHORD.

THE QUANTITY OF #4J1 BARS ON THE BILL OF MATERIAL IS BASED ON 1'-0" CENTERS. J1 BARS SHALL BE PLACED AT EACH VERTICAL STUD ANCHOR. IN THE EVENT THAT THE NUMBER OF VERTICAL STUD ANCHORS EXCEEDS THE NUMBER OF J1 BARS SPECIFIED, ADDITIONAL J1 BARS WILL NOT BE REQUIRED.

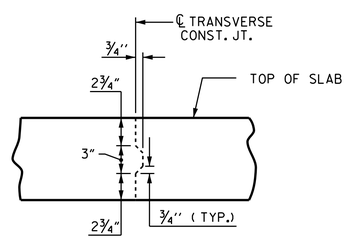

TRANSVERSE CONSTRUCTION JOINT DETAIL

NOTE: REINFORCING STEEL IN SLAB NOT SHOWN. LONGITUDINAL REINFORCING STEEL SHALL BE CONTINUOUS THROUGH JOINT.

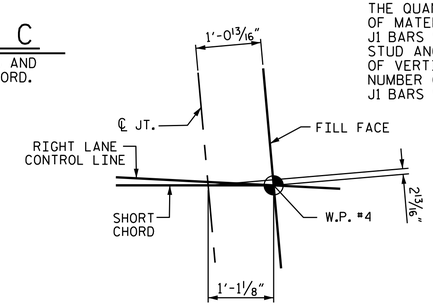

DETAIL "B"

PROJECT NO. U-2579B
FORSYTH COUNTY
STATION: 584+36.24 -L-

SHEET 3 OF 3

STATE OF NORTH CAROLINA
DEPARTMENT OF TRANSPORTATION
RALEIGH

SUPERSTRUCTURE
PLAN OF SPAN C

(RIGHT LANE)

REVISIONS						SHEET NO.
NO.	BY:	DATE:	NO.	BY:	DATE:	S-188
1			3			TOTAL SHEETS
2			4			707

STR. #6

NORTH CAROLINA PROFESSIONAL SEAL 23371 ENGINEER VIPUL A. PATEL
DocuSigned by: Vipul A. Patel 1C157DE15D464AA...
8/1/2014

DRAWN BY :	T. H. CARROLL	DATE :	1/9/14
CHECKED BY :	P. S. ADKINS	DATE :	2/28/14
DESIGN ENGINEER OF RECORD:	H. A. LOCKLEAR	DATE :	6/4/14

30-JUL-2014 12:59
R:\Structures\Plans\Str06\U2579B_SD_S*_06.dgn
lsutton