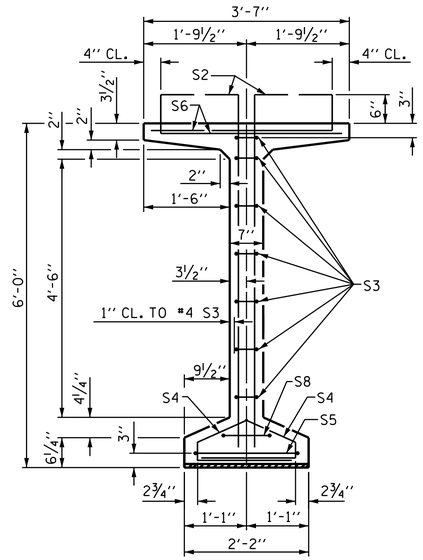

SECTION A-A

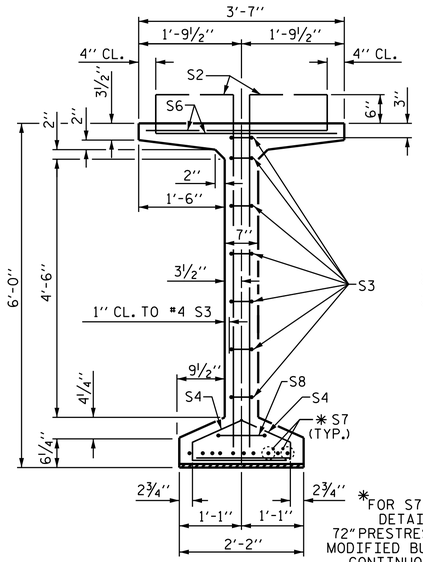

SECTION B-B

✱FOR S7 BARS, SEE DETAIL "C" OF 72"PRESTRESSED CONCRETE MODIFIED BULB TEE GIRDER CONTINUOUS FOR LIVE LOAD DETAILS SHEET

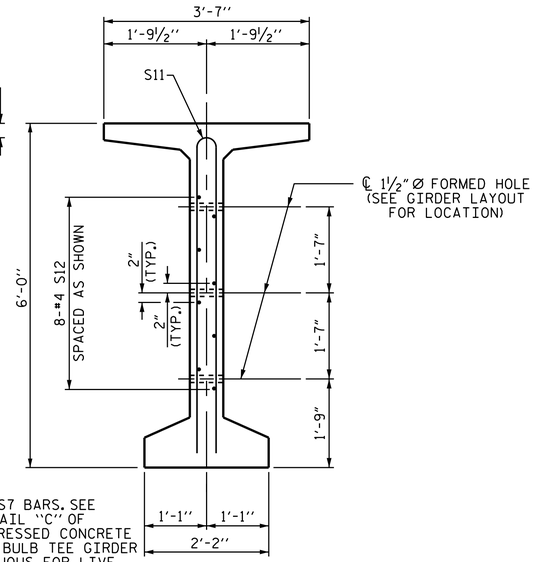

SECTION C-C

(S1, S6 AND S9 BARS NOT SHOWN)

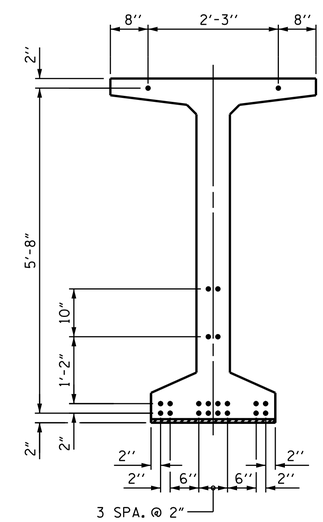

0.6" Ø LOW RELAXATION STRAND LAYOUT

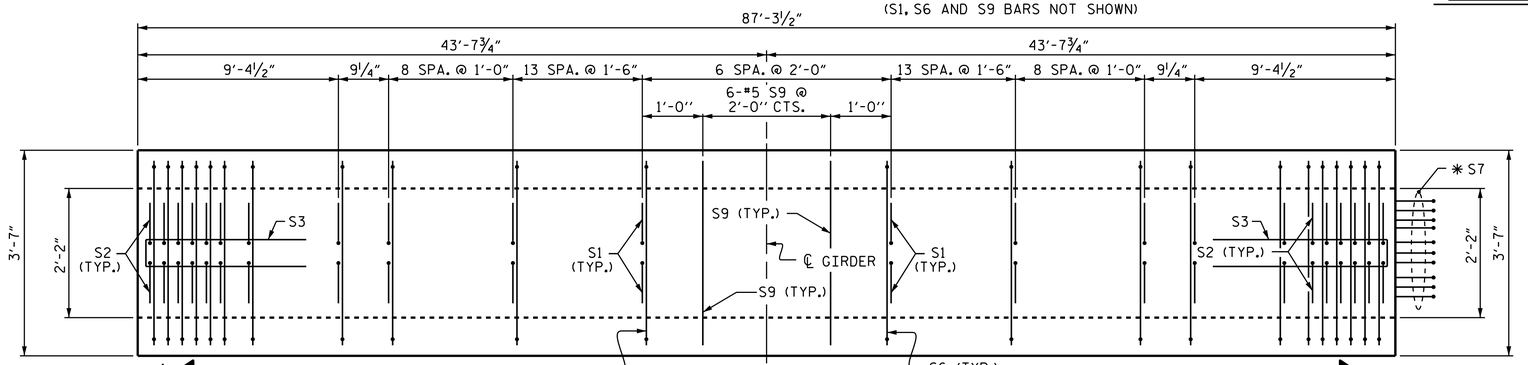

PLAN OF GIRDER

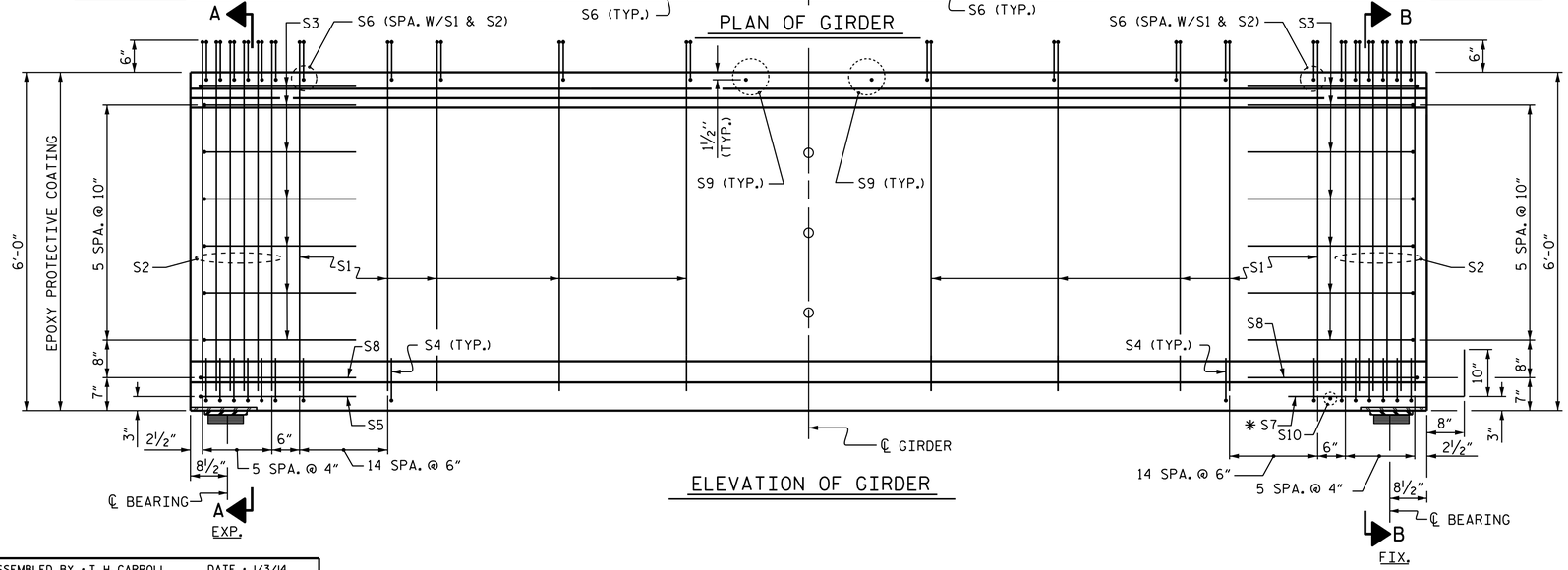

ELEVATION OF GIRDER

DEBONDING LEGEND

● FULLY BONDED STRANDS

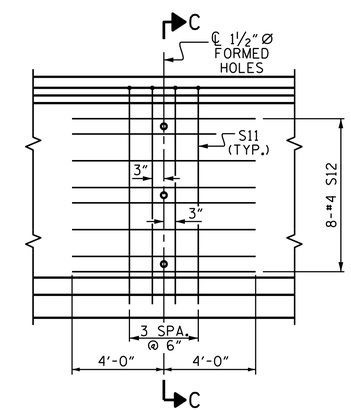

PARTIAL ELEVATION

SHOWING INTERMEDIATE STEEL DIAPHRAGM REINFORCING STEEL FOR ALL GIRDERS

0.6" Ø L. R. GRADE 270 STRANDS

AREA (SQUARE INCHES)	ULTIMATE STRENGTH (LBS. PER STRAND)	APPLIED PRESTRESS (LBS. PER STRAND)
0.217	58,600	43,950

REINFORCING STEEL FOR ONE GDR

BAR	NUMBER	SIZE	TYPE	LENGTH	WEIGHT
S1	158	#4	1	6'-10"	721
S2	24	#5	1	6'-10"	171
S3	14	#4	2	8'-5"	79
S4	84	#4	3	3'-0"	168
S5	1	#5	2	9'-10"	10
S6	182	#5	4	4'-4"	823
✱ S7	10	#5	STR	3'-8"	38
S8	2	#5	2	9'-0"	19
S9	6	#5	STR	3'-3"	20
S10	1	#3	STR	1'-10"	1
S11	8	#5	5	11'-6"	96
S12	16	#4	STR	8'-0"	86

✱NOTE: S7 BARS SHALL BE BENT BEFORE SHIPMENT. HEAT BENDING SHALL NOT BE ALLOWED.

BAR TYPES

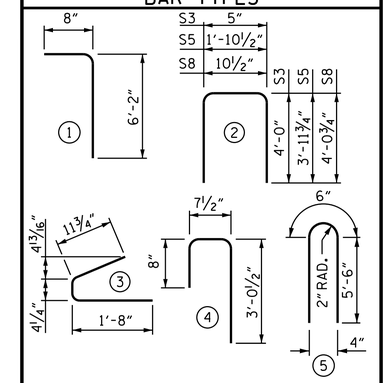

ALL BAR DIMENSIONS ARE OUT-TO-OUT.

QUANTITIES FOR ONE GIRDER

	REINFORCING STEEL	5000 PSI CONCRETE	0.6" Ø L.R. STRANDS
	LB.	C.Y.	No.
	2232	18.7	22

GIRDERS REQUIRED

NUMBER	LENGTH	TOTAL LENGTH
8	87'-3½"	698'-4"

PROJECT NO. U-2579B

FORSYTH COUNTY

STATION: 584+36.24 -L-

SHEET 1 OF 5

STATE OF NORTH CAROLINA
DEPARTMENT OF TRANSPORTATION
RALEIGH

STANDARD
72"PRESTRESSED CONCRETE MODIFIED BULB TEE CONTINUOUS FOR LIVE LOAD SPAN A (RIGHT LANE)

NORTH CAROLINA PROFESSIONAL SEAL 23371 ENGINEER VAPUL A. PATEL

DocuSigned by: Vapul A. Patel 1C157DE15D464AA... 8/1/2014

REVISIONS						SHEET NO.
NO.	BY:	DATE:	NO.	BY:	DATE:	S-191
1			3			TOTAL SHEETS
2			4			707

STR. #6

STD. NO. PCG8

ASSEMBLED BY : T. H. CARROLL	DATE : 1/3/14	
CHECKED BY : P. S. ADKINS	DATE : 2/28/14	
DRAWN BY : EEM 2/6/97	REV. 5/1/06R TLA/GM	DESIGN ENGINEER OF RECORD:
CHECKED BY : VAP 2/6/97	REV. 10/1/11 MAA/GM	H. A. LOCKLEAR DATE : 6/4/14
	REV. 6/13 MAA/GM	

31-JUL-2014 17:15
R:\Structures\Plans\Str06\U2579B_SD_G*_06.dgn
lsutton