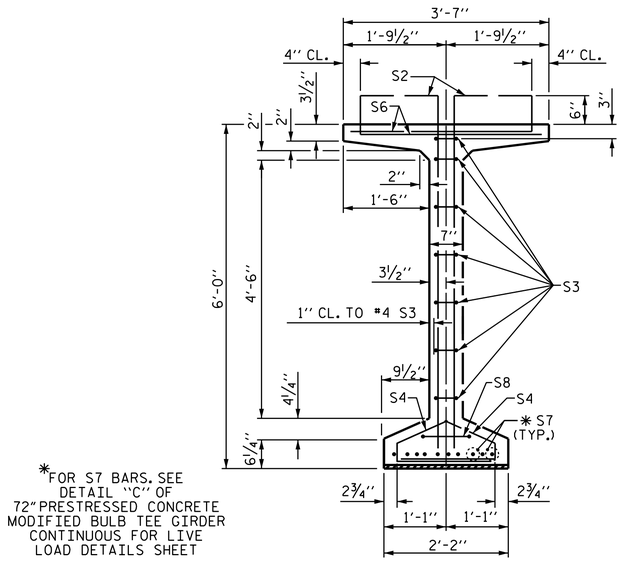

*FOR S7 BARS, SEE DETAIL "C" OF 72" PRESTRESSED CONCRETE MODIFIED BULB TEE GIRDER CONTINUOUS FOR LIVE LOAD DETAILS SHEET

SECTION B-B

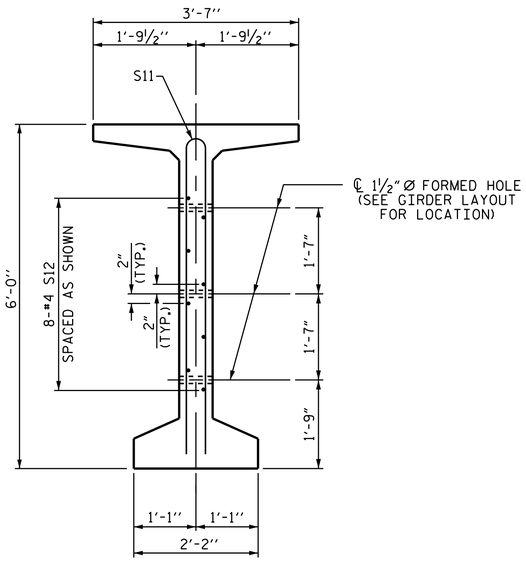

SECTION C-C

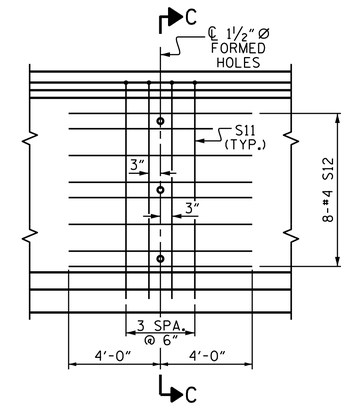

PARTIAL ELEVATION

SHOWING INTERMEDIATE STEEL DIAPHRAGM REINFORCING STEEL FOR ALL GIRDERS

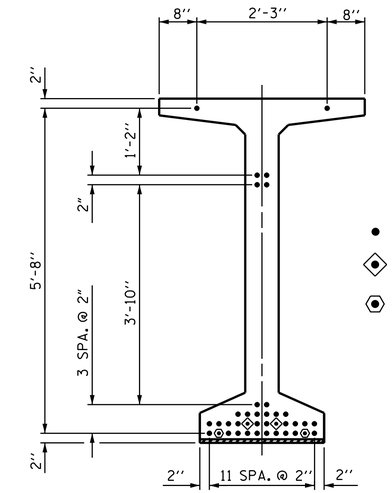

DEBONDING LEGEND
- ● FULLY BONDED STRANDS
- ◇ STRANDS DEBONDED FOR 4'-0" FROM END OF GIRDER
- ⬡ STRANDS DEBONDED FOR 12'-0" FROM END OF GIRDER

0.6" Ø LOW RELAXATION STRAND LAYOUT

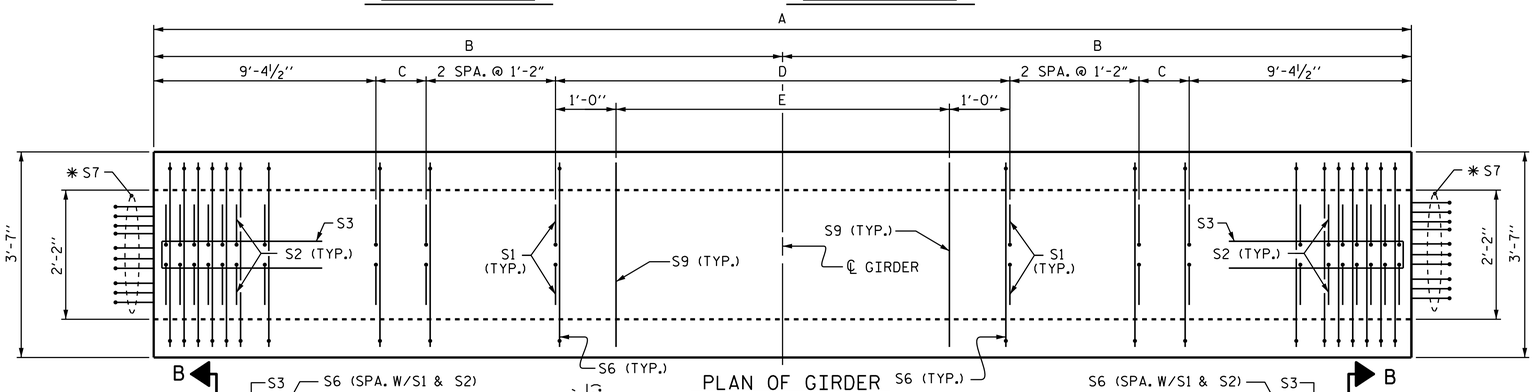

PLAN OF GIRDER

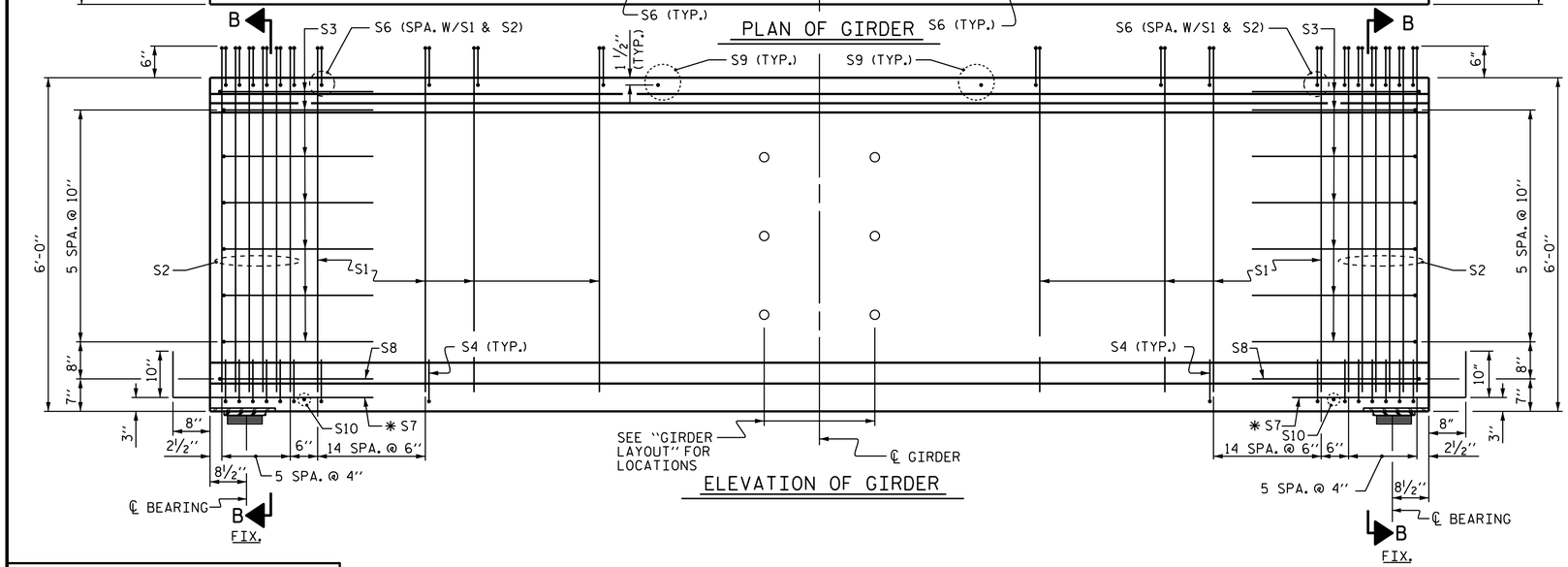

ELEVATION OF GIRDER

GIRDER DIMENSIONS

	A	B	C	D	E
GIRDER B1	104'-10½"	52'-5¼"	8¾"	40 SPA. @ 2'-0"	40-#5 S9 @ 2'-0" CTS.
GIRDER B2	105'-11¾"	52'-11⅞"	3⅜"	41 SPA. @ 2'-0"	41-#5 S9 @ 2'-0" CTS.
GIRDER B3	107'-0⅞"	53'-6 7/16"	9 15/16"	41 SPA. @ 2'-0"	41-#5 S9 @ 2'-0" CTS.
GIRDER B4	108'-2"	54'-1"	4½"	42 SPA. @ 2'-0"	42-#5 S9 @ 2'-0" CTS.
GIRDER B5	109'-3⅛"	54'-7 9/16"	11 1/16"	42 SPA. @ 2'-0"	42-#5 S9 @ 2'-0" CTS.
GIRDER B6	110'-4¼"	55'-2⅛"	5⅝"	43 SPA. @ 2'-0"	43-#5 S9 @ 2'-0" CTS.
GIRDER B7	111'-5½"	55'-8¾"	1'-0¼"	43 SPA. @ 2'-0"	43-#5 S9 @ 2'-0" CTS.
GIRDER B8	112'-6½"	56'-3¼"	6¾"	44 SPA. @ 2'-0"	44-#5 S9 @ 2'-0" CTS.

(NOTE : FOR BILL OF MATERIAL SEE SHEET 3 OF 5.)

PROJECT NO. U-2579B
FORSYTH COUNTY
STATION: 584+36.24 -L-

SHEET 2 OF 5

STATE OF NORTH CAROLINA
DEPARTMENT OF TRANSPORTATION
RALEIGH

STANDARD
72" PRESTRESSED CONCRETE MODIFIED BULB TEE CONTINUOUS FOR LIVE LOAD SPAN B (LEFT LANE)

NORTH CAROLINA PROFESSIONAL SEAL 23371 ENGINEER VIPUL A. PATEL

DocuSigned by: Vipul A. Patel 1C157DE15D464AA... 8/1/2014

REVISIONS						SHEET NO.
NO.	BY:	DATE:	NO.	BY:	DATE:	S-154
1			3			TOTAL SHEETS
2			4			707

STR. #5

STD. NO. PCG8

ASSEMBLED BY : T. H. CARROLL DATE : 10/22/13
CHECKED BY : P. S. ADKINS DATE : 12/30/13

DRAWN BY : EEM 2/6/97
CHECKED BY : VAP 2/6/97

REV. 5/1/06R TLA/GM
REV. 10/1/11 MAA/GM
REV. 6/13 MAA/GM

DESIGN ENGINEER OF RECORD:
H. A. LOCKLEAR DATE : 6/4/14

31-JUL-2014 17:15
R:\Structures\Plans\Str05\U2579B_SD_G*_05.dgn
lsutton