NOTES

STIRRUPS IN CAP MAY BE SHIFTED AS NECESSARY TO CLEAR ANCHOR BOLTS.

BACKWALL SHALL BE PLACED BEFORE APPLYING THE EPOXY PROTECTIVE COATING.

▲ THE TOP SURFACE AREAS OF THE END BENT CAP SHALL BE CURED IN ACCORDANCE WITH THE STANDARD SPECIFICATIONS EXCEPT THE MEMBRANE CURING COMPOUND METHOD SHALL NOT BE USED.

THE TOP SURFACE OF THE CAP EXCEPT THE BRIDGE SEAT BUILDUPS SHALL BE SLOPED TRANSVERSELY FROM THE FILL FACE TO THE BACK FACE AT THE RATE OF 2%.

FOR MSE RETAINING WALLS, SEE SPECIAL PROVISIONS.

FOR GALVANIZED REINFORCING STRAPS, SEE MSE WALL PLANS.

FOR PILE SPLICE DETAILS, SEE END BENT 1, SHEET 3 OF 3.

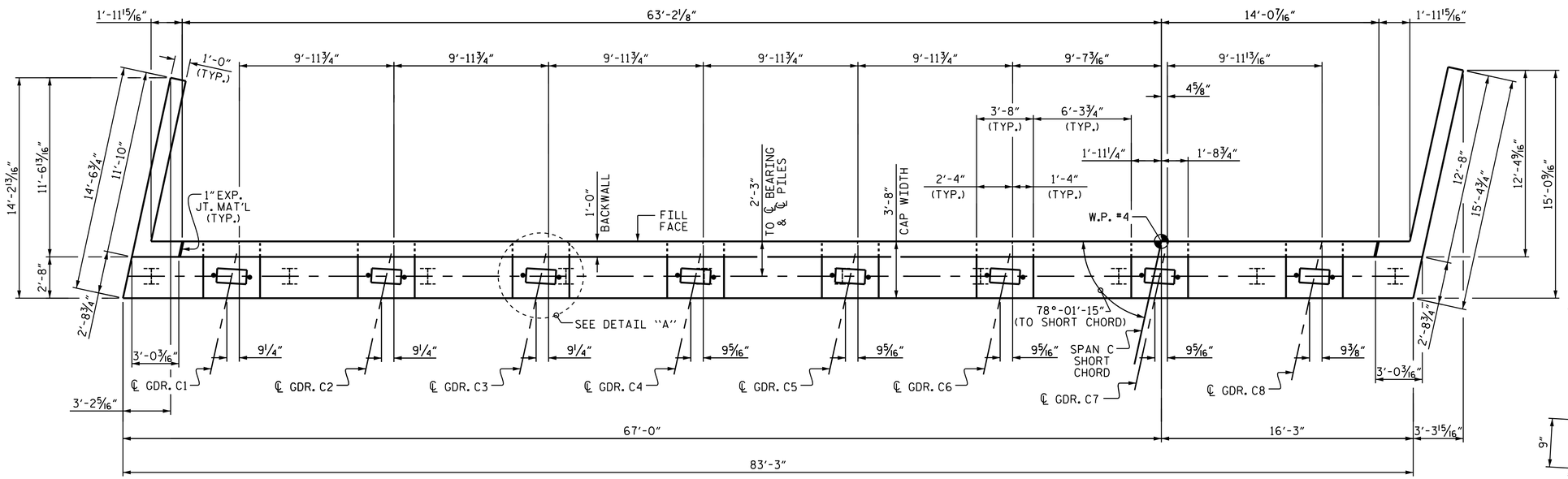

PLAN

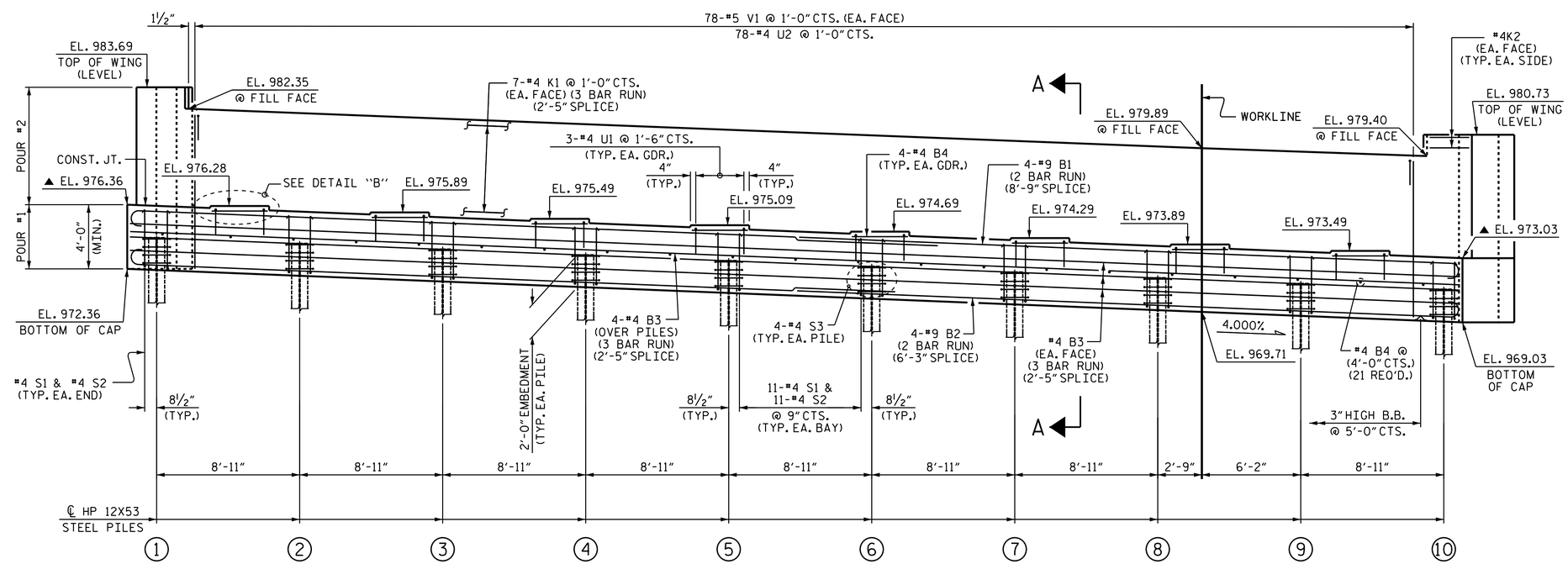

ELEVATION

▲ SEE SHEET 3 OF 3 FOR LOCATION OF ELEVATION BETWEEN BRIDGE SEAT BUILD-UPS.

TOP OF PILE ELEVATIONS	
1	EL. 974.32
2	EL. 973.97
3	EL. 973.61
4	EL. 973.25
5	EL. 972.89
6	EL. 972.54
7	EL. 972.18
8	EL. 971.82
9	EL. 971.46
10	EL. 971.11

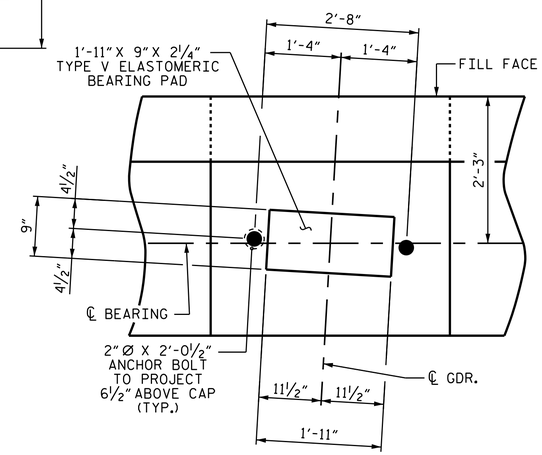

DETAIL "A"

(TYP. EA. GDR.)

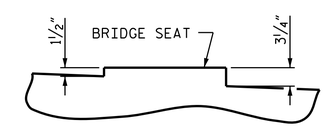

DETAIL "B"

(TYP. EA. BRIDGE SEAT)

PROJECT NO. U-2579B

FORSYTH COUNTY

STATION: 584+36.24 -L-

SHEET 1 OF 3

STATE OF NORTH CAROLINA
DEPARTMENT OF TRANSPORTATION
RALEIGH

SUBSTRUCTURE

END BENT 2

(LEFT LANE)

NORTH CAROLINA PROFESSIONAL SEAL 23371 ENGINEER VIPUL A. PATEL

DocuSigned by: Vipul A. Patel 1C157DE15D464AA... 7/29/2014

REVISIONS								SHEET NO.
NO.	BY:	DATE:		NO.	BY:	DATE:		S-172
1				3				TOTAL SHEETS
2				4				707

STR. #5

DRAWN BY :	T. H. CARROLL	DATE :	1/31/14
CHECKED BY :	R. P. PATEL	DATE :	2/13/14
DESIGN ENGINEER OF RECORD:	H. A. LOCKLEAR	DATE :	6/4/14

28-JUL-2014 16:31
R:\Structures\Plans\Str05\U2579B_SD_E2_05.dgn
lsutton