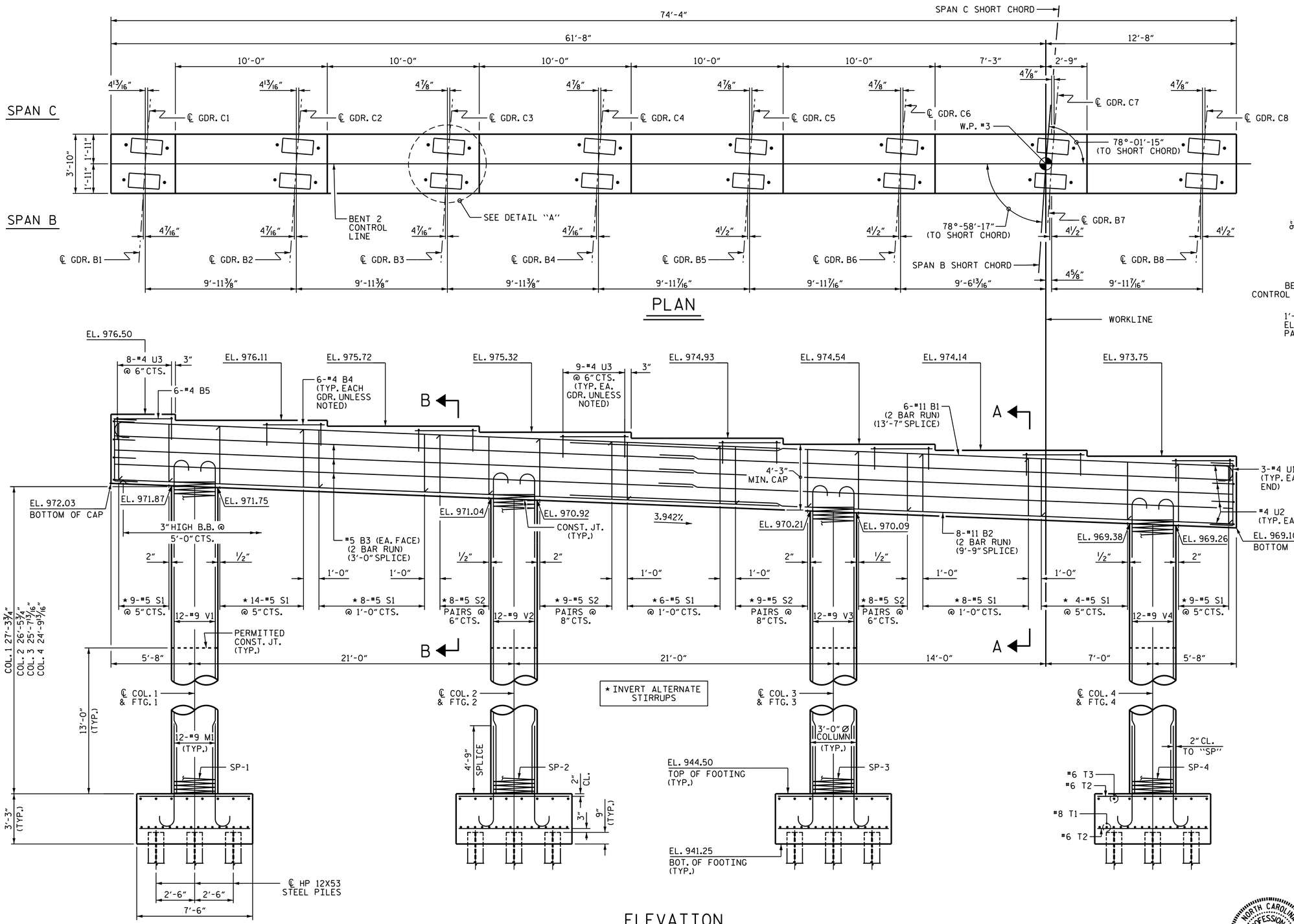

NOTES

HOOKS ON "V" BARS MAY BE TURNED AS NECESSARY FOR PLACING REINFORCING STEEL.

STIRRUPS IN CAP MAY BE SHIFTED AS NECESSARY TO CLEAR ANCHOR BOLTS.

FOR PILE SPLICE DETAILS, SEE END BENT 1, SHEET 3 OF 3.

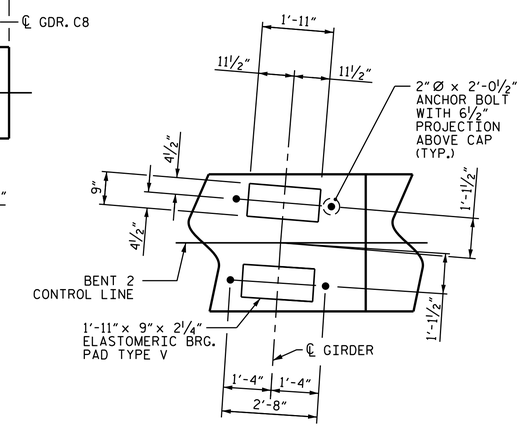

DETAIL "A"

(TYP. EA. GIRDER)

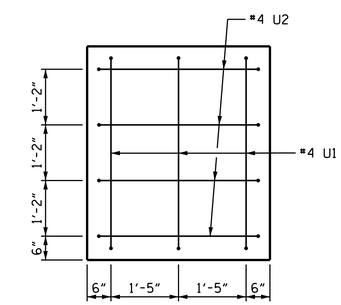

END VIEW

PROJECT NO. U-2579B

FORSYTH COUNTY

STATION: 584+36.24 -L-

SHEET 1 OF 2

STATE OF NORTH CAROLINA
DEPARTMENT OF TRANSPORTATION
RALEIGH

SUBSTRUCTURE

BENT 2

(LEFT LANE)

NORTH CAROLINA PROFESSIONAL SEAL 23371 ENGINEER VIPUL A. PATEL

DocuSigned by: Vipul A. Patel 339B086CBE1CA86... 8/8/2014

REVISIONS								SHEET NO.
NO.	BY:	DATE:	NO.	BY:	DATE:			S-170
1			3					TOTAL SHEETS
2			4					707

DRAWN BY :	M.E.GILES	DATE :	1/27/14
CHECKED BY :	K.D.LAYNE	DATE :	3/11/14
DESIGN ENGINEER OF RECORD:	H.A. LOCKLEAR	DATE :	6/4/14

08-AUG-2014 11:01
R:\Structures\Plans\Str05\U2579B_SD_B*_05.dgn
lsutton

STR. #5