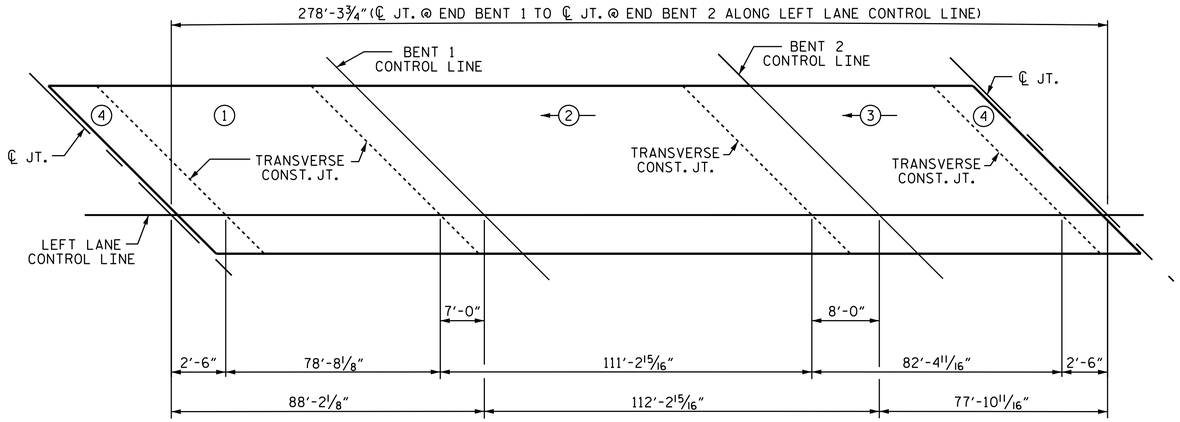

POURING SEQUENCE

INDICATES POUR NUMBER AND DIRECTION OF POUR

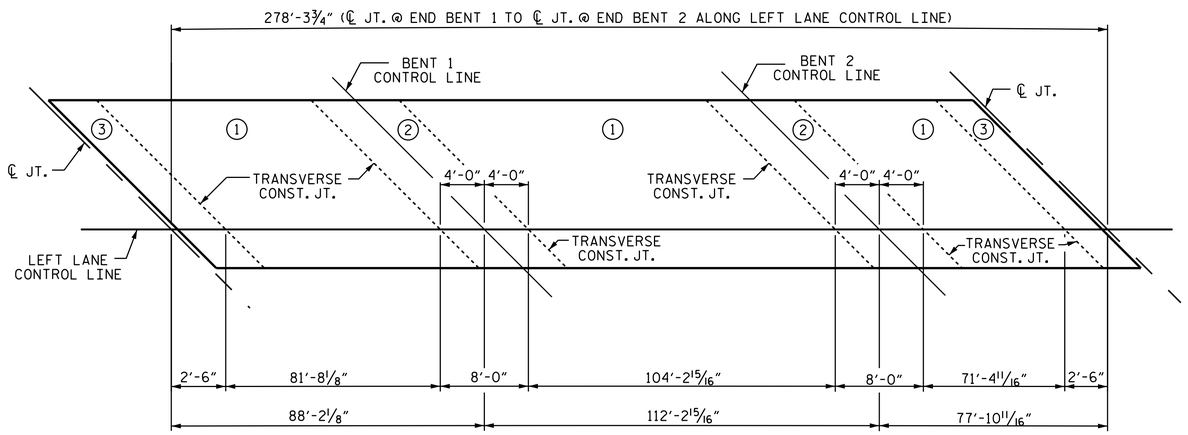

OPTIONAL POURING SEQUENCE

POUR ② CAN NOT BE STARTED UNTIL BOTH ADJACENT POUR ① REACH A MINIMUM OF 3,000 PSI

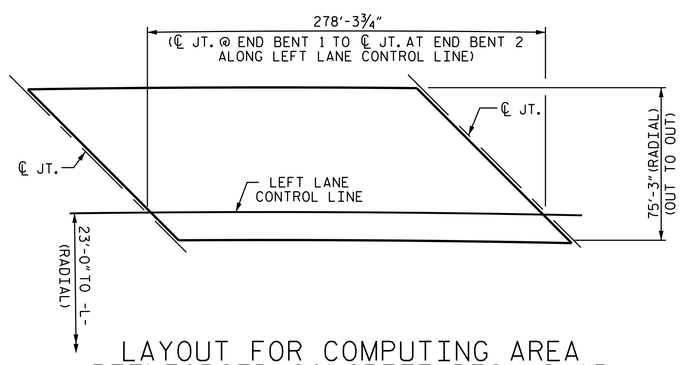

LAYOUT FOR COMPUTING AREA REINFORCED CONCRETE DECK SLAB

(SQ. FT. = 20,739)

REINFORCING BAR SCHEDULE

SPANS A, B & C

BAR	NO.	SIZE	TYPE	LENGTH	WEIGHT	BAR	NO.	SIZE	TYPE	LENGTH	WEIGHT
✱ A1	848	#5	STR	38'-9"	34273	✱ B1	104	#4	STR	30'-0"	2084
A2	424	#5	STR	43'-5"	19200	✱ B2	104	#7	STR	37'-10"	8042
A3	424	#5	STR	33'-8"	14888	✱ B3	49	#7	STR	30'-3"	3030
						✱ B4	104	#4	STR	21'-4"	1482
✱ A101	2	#5	STR	56'-2"	117	✱ B5	104	#7	STR	36'-3"	7706
✱ A102	2	#5	STR	40'-11"	85	✱ B6	49	#7	STR	28'-8"	2871
✱ A103	2	#5	STR	25'-8"	54	✱ B7	104	#4	STR	26'-6"	1841
✱ A104	2	#5	STR	10'-5"	22	B8	275	#5	STR	57'-9"	16564
✱ A105	1	#5	STR	2'-10"	3	B9	42	#5	STR	30'-3"	1325
✱ A106	4	#5	STR	34'-10"	145	B10	42	#5	STR	28'-8"	1256
✱ A107	4	#5	STR	31'-7"	132						
✱ A108	2	#5	STR	54'-2"	113	✱ G1	2	#5	STR	38'-9"	81
✱ A109	2	#5	STR	47'-9"	100	✱ G2	2	#5	STR	39'-7"	83
✱ A110	2	#5	STR	41'-4"	86						
✱ A111	2	#5	STR	34'-11"	73	✱ J1	147	#4	7	1'-5"	139
✱ A112	2	#5	STR	28'-6"	59						
✱ A113	2	#5	STR	22'-1"	46	✱ K1	8	#8	1	14'-9"	315
✱ A114	2	#5	STR	15'-8"	33	✱ K2	24	#8	2	22'-10"	1463
✱ A115	2	#5	STR	9'-3"	19	✱ K3	28	#6	STR	5'-10"	245
✱ A116	2	#5	STR	2'-10"	6	K4	28	#4	STR	6'-3"	117
						K5	140	#4	STR	8'-10"	826
A201	4	#5	STR	31'-6"	131	K6	28	#4	STR	5'-10"	109
A202	2	#5	STR	45'-6"	95	K7	42	#4	STR	25'-6"	715
A203	2	#5	STR	30'-3"	63						
A204	2	#5	STR	15'-0"	31	✱ S1	98	#5	3	5'-10"	596
A205	1	#5	STR	7'-5"	8	✱ S2	98	#4	4	3'-2"	207
A206	4	#5	STR	35'-8"	149	S3	672	#4	5	2'-9"	1234
A207	4	#5	STR	32'-5"	135						
A208	2	#5	STR	56'-2"	117	U1	98	#4	6	16'-3"	1064
A209	2	#5	STR	49'-9"	104	U2	28	#4	8	10'-11"	204
A210	2	#5	STR	43'-4"	90						
A211	2	#5	STR	36'-11"	77						
A212	2	#5	STR	30'-6"	64						
A213	2	#5	STR	24'-1"	50						
A214	2	#5	STR	17'-8"	37	REINFORCING STEEL					58,686 LBS
A215	2	#5	STR	11'-3"	23	✱ EPOXY COATED					
A216	2	#5	STR	4'-10"	10	REINFORCING STEEL					65,551 LBS

SUPERSTRUCTURE BILL OF MATERIAL

	SAND LIGHTWEIGHT CONCRETE	REINFORCING STEEL	EPOXY COATED REINFORCING STEEL
	(CU. YDS.)	(LBS.)	(LBS.)
POUR #1	200.9	58,686	65,551
POUR #2	302.6		
POUR #3	236.1		
POUR #4	17.5		
TOTALS✱✱	757.1	58,686	65,551

✱✱QUANTITIES FOR BARRIER RAIL ARE NOT INCLUDED

GROOVING BRIDGE FLOORS

APPROACH SLABS	4,073	SQ.FT.
BRIDGE DECK	18,935	SQ.FT.
TOTAL	23,008	SQ.FT.

SUPERSTRUCTURE REINFORCING STEEL LENGTHS ARE BASED ON THE FOLLOWING MINIMUM SPLICE LENGTHS

BAR SIZE	SUPERSTRUCTURE EXCEPT APPROACH SLABS, PARAPET, AND BARRIER RAIL		APPROACH SLABS		PARAPET AND BARRIER RAIL
	EPOXY COATED	UNCOATED	EPOXY COATED	UNCOATED	
#4	2'-0"	1'-9"	2'-0"	1'-9"	2'-9"
#5	2'-6"	2'-2"	2'-6"	2'-2"	3'-5"
#6	3'-0"	2'-7"	3'-10"	2'-7"	4'-4"
#7	5'-3"	3'-6"			
#8	6'-10"	4'-7"			

BAR TYPES

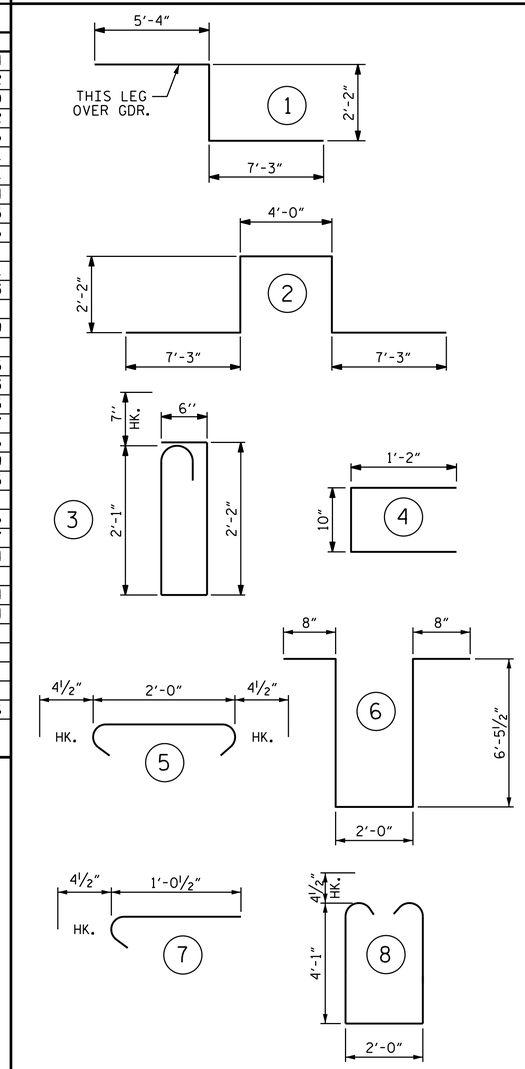

ALL BAR DIMENSIONS ARE OUT TO OUT.

PROJECT NO. U-2579B

FORSYTH COUNTY

STATION: 584+36.24 -L-

STATE OF NORTH CAROLINA
DEPARTMENT OF TRANSPORTATION
RALEIGH

SUPERSTRUCTURE
BILL OF MATERIAL

(LEFT LANE)

NORTH CAROLINA PROFESSIONAL SEAL 23371 ENGINEER VIPUL A. PATEL

DocuSigned by: Vipul A. Patel 1C157DE15D464AA... 7/29/2014

REVISIONS						SHEET NO.
NO.	BY:	DATE:	NO.	BY:	DATE:	S-164
1			3			TOTAL SHEETS
2			4			707

STR. #5

DRAWN BY :	T. H. CARROLL	DATE :	11/22/13
CHECKED BY :	P. S. ADKINS	DATE :	12/30/13
DESIGN ENGINEER OF RECORD:	H. A. LOCKLEAR	DATE :	6/4/14

28-JUL-2014 16:31
R:\Structures\Plans\Str05\U2579B_SD_BM_05.dgn
lsutton