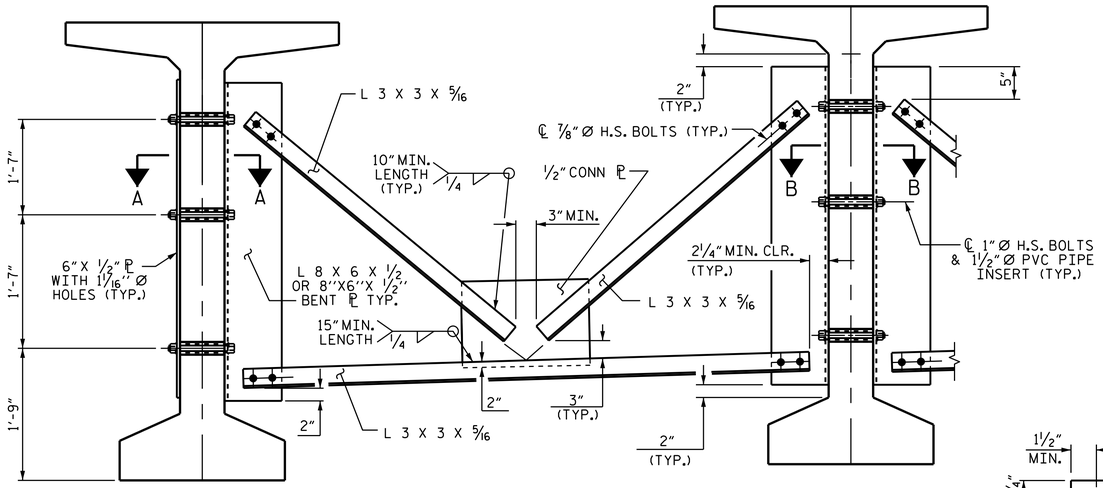

EXTERIOR GIRDER

INTERIOR GIRDER

PART SECTION AT INTERMEDIATE DIAPHRAGM

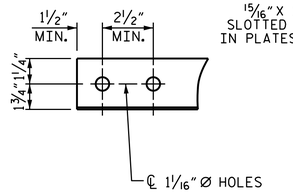

ANGLE END

(L 3 X 3 X 5/16)

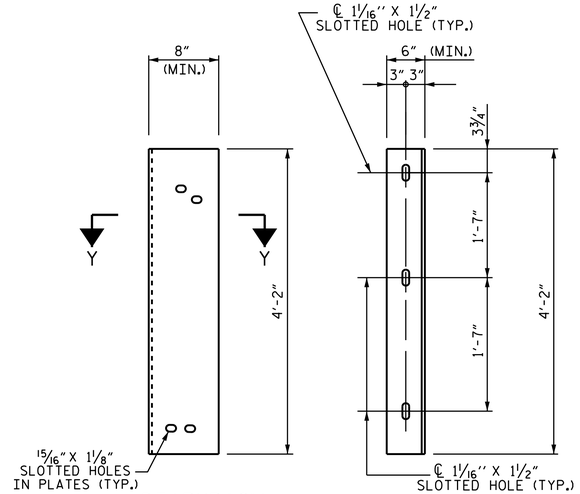

DIAPHRAGM FACE

WEB FACE

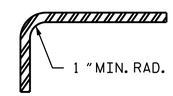

SECTION Y-Y

CONNECTOR PLATE DETAIL

STRUCTURAL STEEL NOTES

ALL INTERMEDIATE DIAPHRAGM STEEL AND CONNECTOR PLATES SHALL BE AASHTO M270 GRADE 50 OR APPROVED EQUAL.

TENSION ON THE ASTM A325 BOLTS THROUGH THE ANGLE MEMBER SHALL BE CALIBRATED USING DIRECT TENSION INDICATOR (DTI) WASHERS IN ACCORDANCE WITH THE STANDARD SPECIFICATIONS.

TENSION ON THE ASTM A449 BOLTS THROUGH THE GIRDER WEB SHALL BE SNUG TIGHTENED FOLLOWED BY AN ADDITIONAL 1/4 TURN.

THE PLATES, BENT PLATES, AND ANGLES SHALL BE GALVANIZED OR METALLIZED IN ACCORDANCE WITH THE STANDARD SPECIFICATIONS. FOR THERMAL SPRAYED COATINGS (METALLIZATION), SEE SPECIAL PROVISIONS.

FOR METALLIZATION, APPLY AN 8 MIL THICK 99.99 PERCENT ZINC (W-Zn-1) THERMAL SPRAYED COATING WITH A 0.5 MIL THICK SEAL COAT TO ALL STEEL DIAPHRAGM SURFACES IN ACCORDANCE WITH THE THERMAL SPRAYED COATINGS SPECIAL PROVISION AND SECTION 442 OF THE STANDARD SPECIFICATIONS.

GALVANIZE THE HIGH STRENGTH BOLTS, NUTS, WASHERS AND DIRECT TENSION INDICATORS IN ACCORDANCE WITH THE STANDARD SPECIFICATIONS.

USE AN ASTM F436 HARDENED WASHER WITH STANDARD AND SLOTTED HOLES UNDER EACH BOLT HEAD AND NUT.

FOR BOLTS THROUGH THE GIRDER WEB, PROVIDE SUFFICIENT LENGTH OF THREADS ON ALL BOLTS TO ACCOMMODATE WASHERS AND THE THICKNESS OF CONNECTING MEMBER PLUS AT LEAST 1/4" PROJECTION BEYOND THE NUT.

INTERMEDIATE DIAPHRAGM ASSEMBLY SHALL COMPLY WITH SECTION 1072 OF THE STANDARD SPECIFICATIONS.

SUBMIT TWO SETS OF WORKING DRAWINGS FOR THE INTERMEDIATE DIAPHRAGM ASSEMBLY FOR REVIEW, COMMENTS AND ACCEPTANCE. AFTER REVIEW, COMMENTS, AND ACCEPTANCE, SUBMIT SEVEN SETS FOR DISTRIBUTION.

IN THE EXTERIOR BAYS, PLACE TEMPORARY STRUTS BETWEEN PRESTRESSED GIRDERS ADJACENT TO THE STEEL DIAPHRAGMS. STRUTS SHALL REMAIN IN PLACE 3 DAYS AFTER CONCRETE IS PLACED.

THE COST OF THE STEEL DIAPHRAGMS AND ASSEMBLIES SHALL BE INCLUDED IN THE UNIT PRICE BID FOR PRESTRESSED CONCRETE GIRDERS.

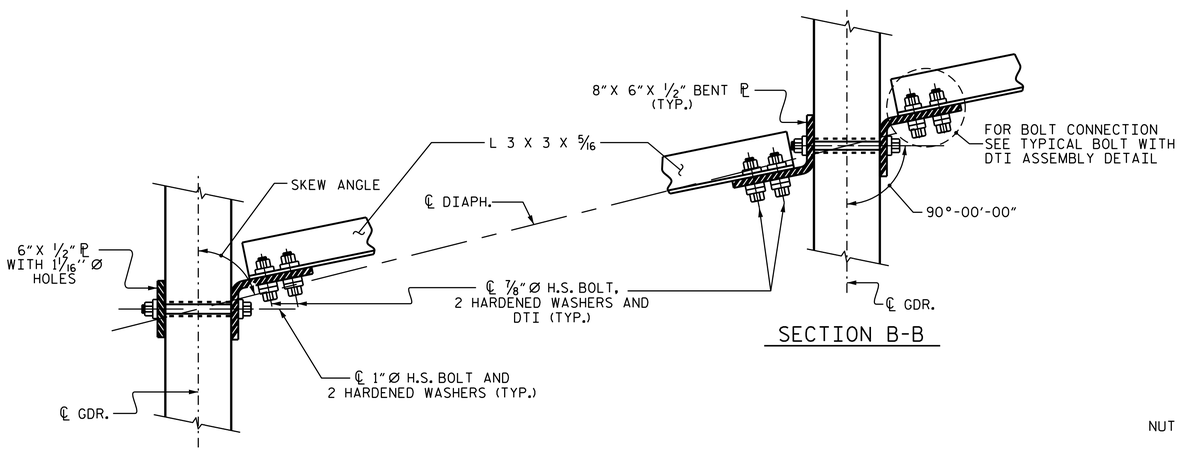

SECTION B-B

SECTION A-A

CONNECTOR DETAILS

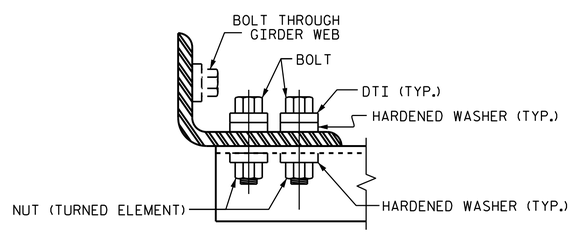

BOLT WITH DTI ASSEMBLY DETAIL

PROJECT NO. U-2579B

FORSYTH COUNTY

STATION: 584+36.24 -L-

STATE OF NORTH CAROLINA
DEPARTMENT OF TRANSPORTATION
RALEIGH

STANDARD

INTERMEDIATE STEEL DIAPHRAGMS FOR 72" MODIFIED BULB TEE PRESTRESSED CONCRETE GIRDERS (LEFT LANE)

NORTH CAROLINA PROFESSIONAL SEAL 23371 ENGINEER VIPUL A. PATEL

DocuSigned by: Vipul A. Patel 1C157DE15D464AA... 7/29/2014

REVISIONS						SHEET NO.
NO.	BY:	DATE:	NO.	BY:	DATE:	S-158
1			3			TOTAL SHEETS
2			4			707

STR. #5 STD. NO. PCG11

ASSEMBLED BY : T. H. CARROLL	DATE : 10/22/13
CHECKED BY : P. S. ADKINS	DATE : 12/30/13
DRAWN BY : RWW 11/09	ADDED 11/23/09R
CHECKED BY : GM 11/09	REV. 10/1/11 MAA/GM

28-JUL-2014 16:31
R:\Structures\Plans\Str05\U2579B_SD_G*_05.dgn
lsutton