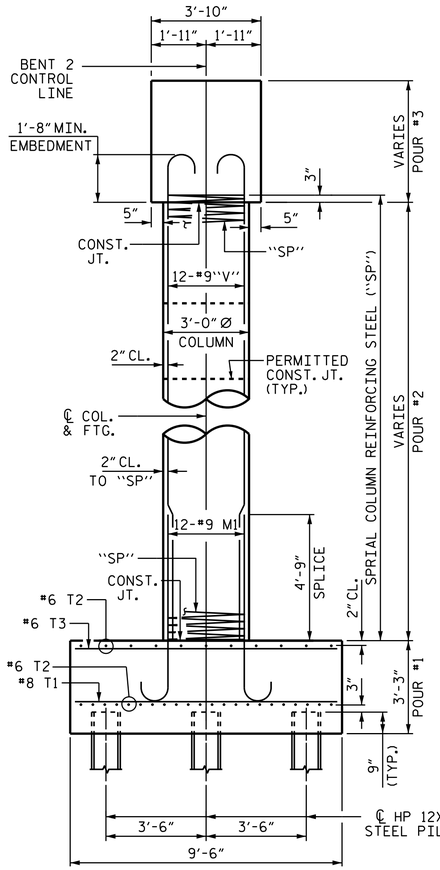

END VIEW

REINFORCING STEEL, DIMENSIONS, AND DETAILS ARE TYPICAL FOR EACH COLUMN AND FOOTING UNLESS OTHERWISE NOTED

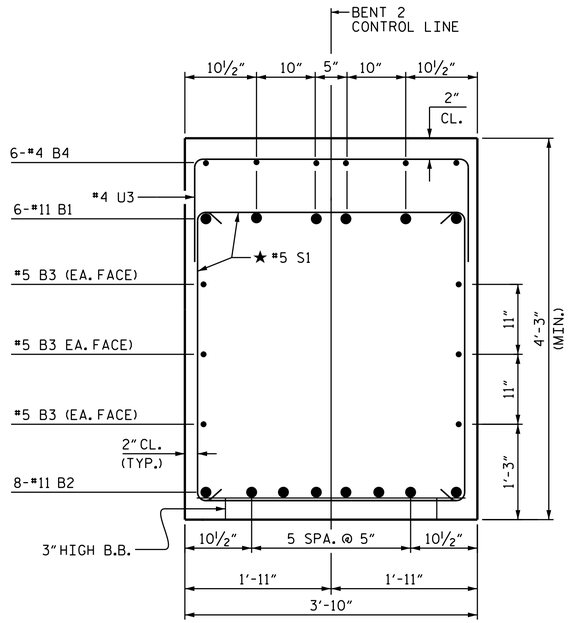

SECTION A-A

★ INVERT ALTERNATE STIRRUPS

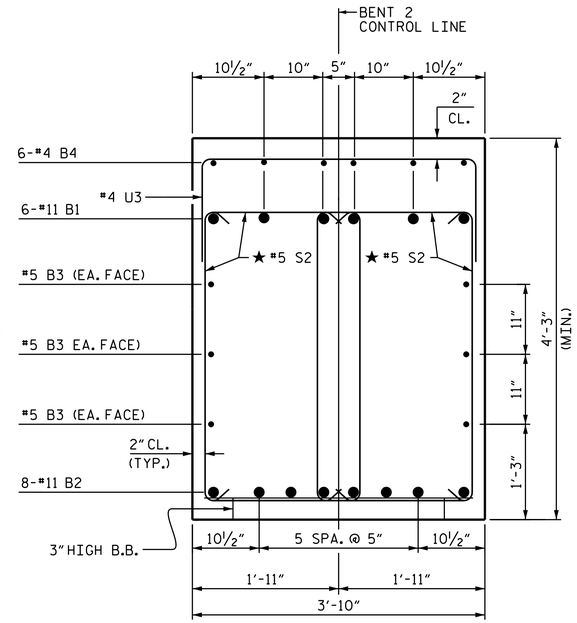

SECTION B-B

★ INVERT ALTERNATE STIRRUPS

BAR TYPES

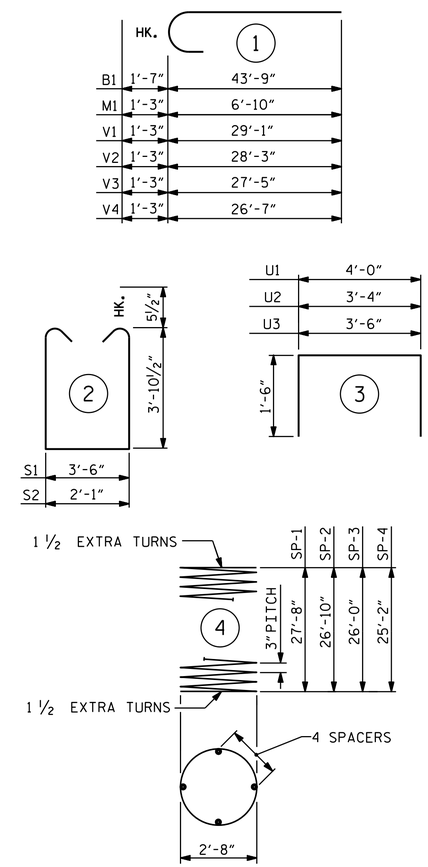

ALL BAR DIMENSIONS ARE OUT TO OUT.

BILL OF MATERIAL

BENT 2

BAR	NO.	SIZE	TYPE	LENGTH	WEIGHT
B1	12	#11	1	45'-4"	2890
B2	16	#11	STR	41'-11"	3563
B3	12	#5	STR	38'-6"	482
B4	42	#4	STR	4'-6"	126
B5	6	#4	STR	4'-1"	16
M1	48	#9	1	8'-1"	1319
S1	68	#5	2	12'-2"	863
S2	68	#5	2	10'-9"	762
T1	64	#8	STR	9'-0"	1538
T2	132	#6	STR	7'-0"	1388
T3	32	#6	STR	9'-0"	433
U1	6	#4	3	7'-0"	28
U2	8	#4	3	6'-4"	34
U3	71	#4	3	6'-6"	308
V1	12	#9	1	30'-4"	1238
V2	12	#9	1	29'-6"	1204
V3	12	#9	1	28'-8"	1170
V4	12	#9	1	27'-10"	1136
REINFORCING STEEL				LBS.	18,498
SP-1	1	**	4	938'-6"	627
SP-2	1	**	4	911'-9"	609
SP-3	1	**	4	882'-10"	590
SP-4	1	**	4	856'-0"	572
SPIRAL COLUMN REINFORCING STEEL				LBS.	2,398

CLASS A CONCRETE BREAKDOWN:		
POUR #1 (FOOTINGS)	C.Y.	34.3
POUR #2 (COLUMNS)	C.Y.	27.3
POUR #3 (CAP)	C.Y.	47.1
TOTAL CLASS A CONCRETE	C.Y.	108.7
FOUNDATION EXCAVATION		LUMP SUM
HP 12X53 STEEL PILES No. 28	LIN. FT.	1,155
STEEL PILE POINTS	EACH	28

** THE "SP" SPIRAL REINFORCING STEEL SHALL BE W-20 OR D-20 COLD DRAWN WIRE OR #4 PLAIN OR DEFORMED BAR.

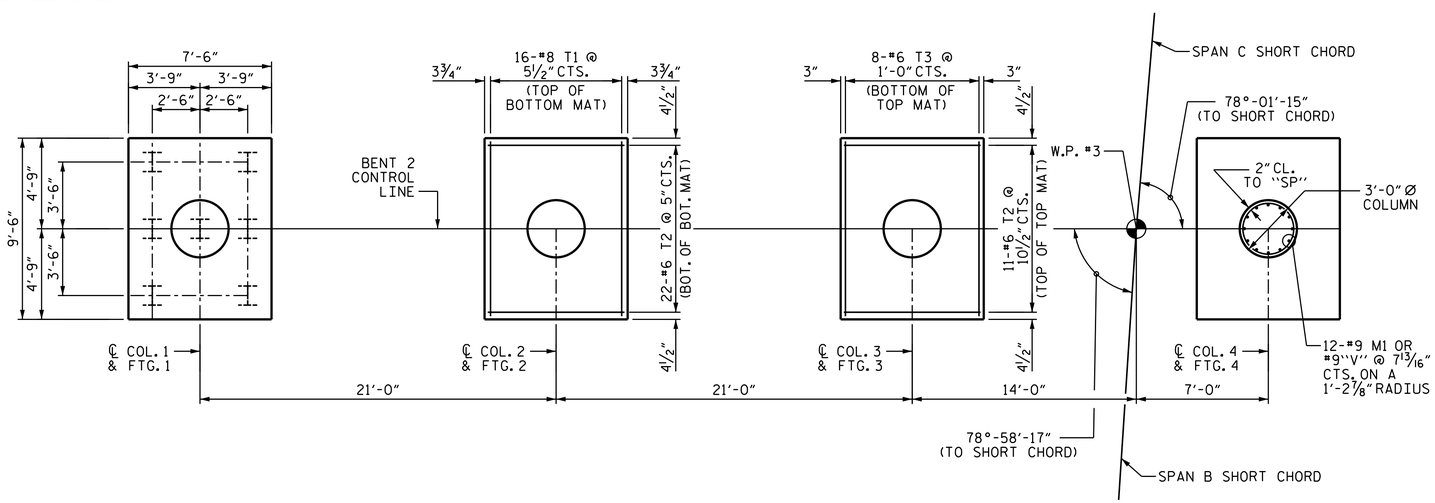

PLAN OF FOOTINGS & COLUMNS

REINFORCING STEEL, DIMENSIONS AND DETAILS ARE TYPICAL FOR EACH COLUMN AND FOOTING UNLESS OTHERWISE NOTED

PROJECT NO. U-2579B
FORSYTH COUNTY
STATION: 584+36.24 -L-

SHEET 2 OF 2

STATE OF NORTH CAROLINA
DEPARTMENT OF TRANSPORTATION
RALEIGH

SUBSTRUCTURE

BENT 2

(LEFT LANE)

NORTH CAROLINA PROFESSIONAL SEAL 23371 ENGINEER VIPUL A. PATEL

DocuSigned by: Vipul A. Patel 1C157DE15D464AA... 8/4/2014

REVISIONS						SHEET NO.
NO.	BY:	DATE:	NO.	BY:	DATE:	S-171
1			3			TOTAL SHEETS
2			4			707

STR. #5

DRAWN BY :	M.E. GILES	DATE :	1/27/14
CHECKED BY :	K.D.LAYNE	DATE :	3/11/14
DESIGN ENGINEER OF RECORD:	H.A. LOCKLEAR	DATE :	6/4/14

04-AUG-2014 13:17
R:\Structures\Plans\Str05\U2579B_SD_B*_05.dgn
lsutton