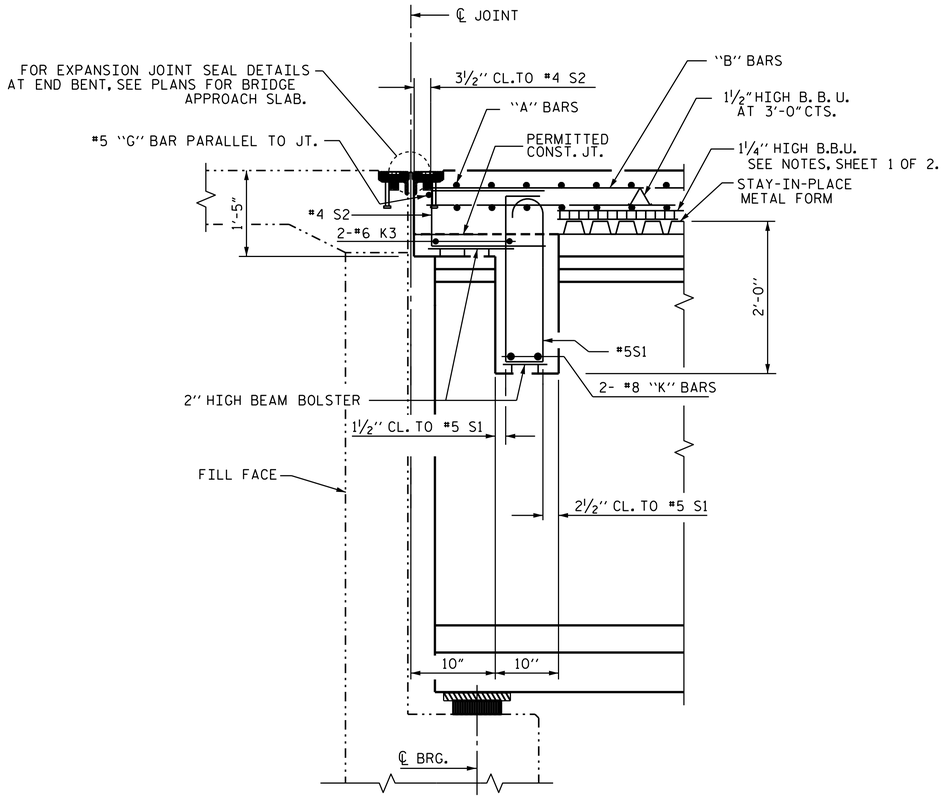

SECTION THRU END BENT DIAPHRAGM

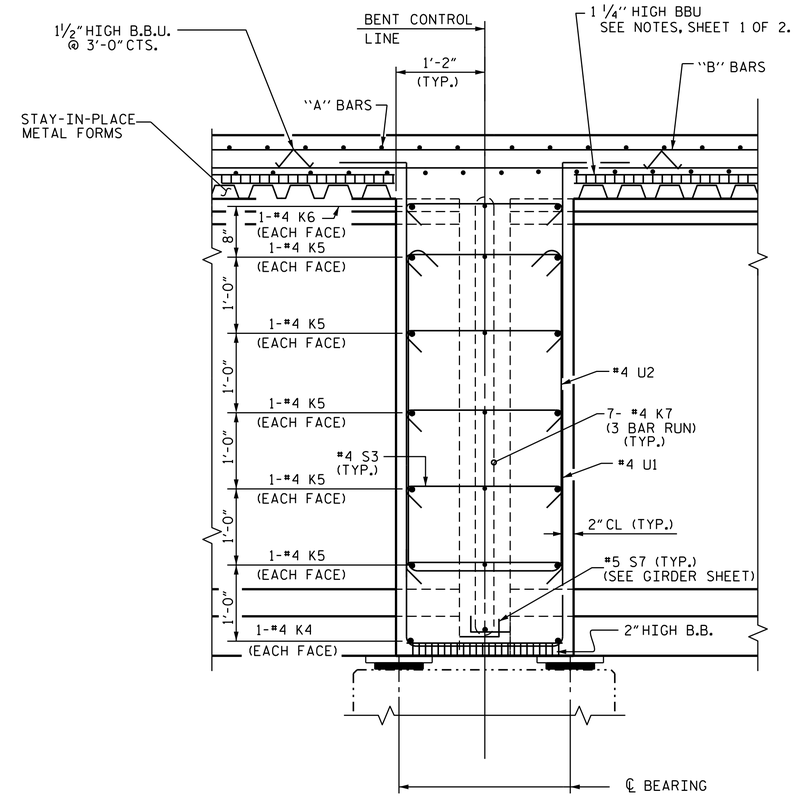

SECTION THRU BENT DIAPHRAGM

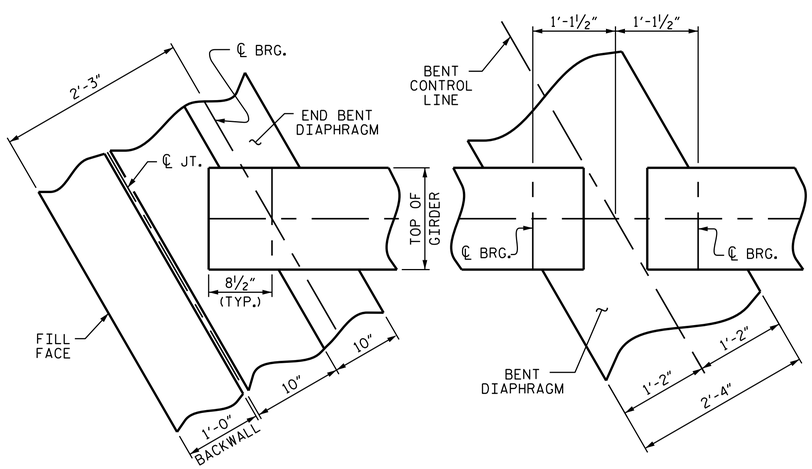

AT END BENT

AT BENT

PLAN OF DIAPHRAGMS

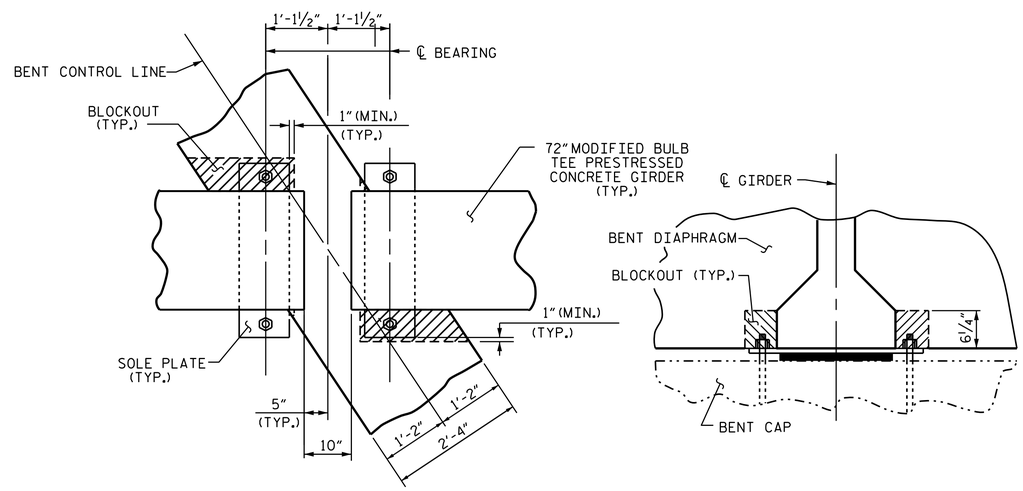

PLAN

SECTION

BENT DIAPHRAGM BLOCK-OUT DETAIL

PROJECT NO. U-2579B

FORSYTH COUNTY

STATION: 584+36.24 -L-

SHEET 2 OF 2

STATE OF NORTH CAROLINA
DEPARTMENT OF TRANSPORTATION
RALEIGH

SUPERSTRUCTURE

TYPICAL SECTION

(LEFT LANE)

NORTH CAROLINA PROFESSIONAL SEAL 23371 ENGINEER VIPUL A. PATEL

DocuSigned by: Vipul A. Patel 1C157DE15D464AA... 7/29/2014

REVISIONS						SHEET NO.
NO.	BY:	DATE:	NO.	BY:	DATE:	S-147
1			3			TOTAL SHEETS
2			4			707

STR. #5

DRAWN BY :	T. H. CARROLL	DATE :	10/08/13
CHECKED BY :	P. S. ADKINS	DATE :	12/30/13
DESIGN ENGINEER OF RECORD:	H. A. LOCKLEAR	DATE :	6/4/14

28-JUL-2014 16:30
R:\Structures\Plans\Str05\U2579B_SD_TS_05.dgn
lsutton