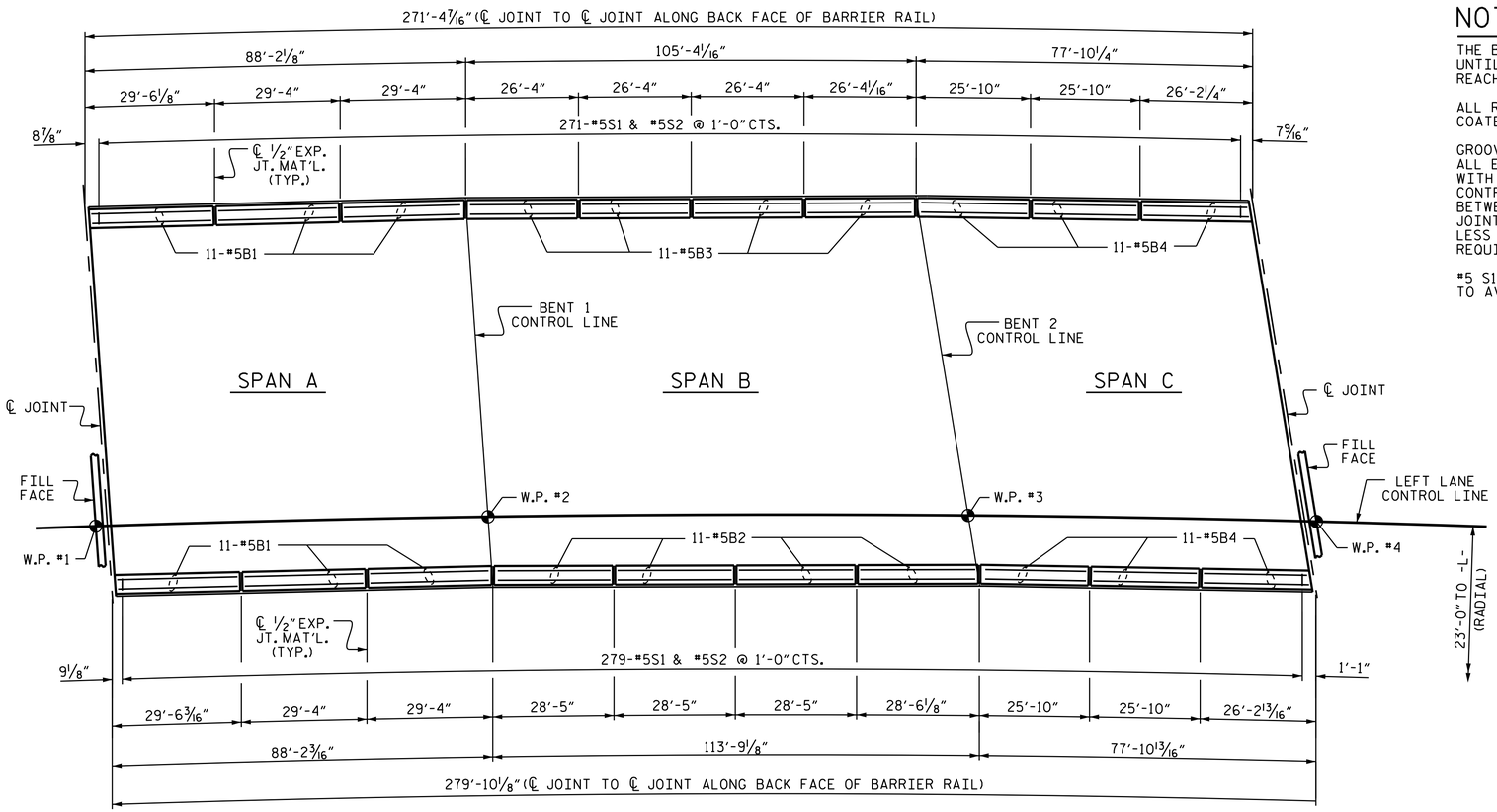

PLAN OF BARRIER RAIL

NOTES

THE BARRIER RAIL IN A CONTINUOUS UNIT SHALL NOT BE CAST UNTIL ALL SLAB CONCRETE IN THAT SPAN HAS BEEN CAST AND HAS REACHED A MINIMUM COMPRESSIVE STRENGTH OF 3,000 PSI.

ALL REINFORCING STEEL IN BARRIER RAILS SHALL BE EPOXY COATED.

GROOVED CONTRACTION JOINTS, 1/2" IN DEPTH, SHALL BE TOOLED IN ALL EXPOSED FACES OF THE BARRIER RAIL AND IN ACCORDANCE WITH ARTICLE 825-10(B) OF THE STANDARD SPECIFICATIONS. THE CONTRACTION JOINT SHALL BE LOCATED AT EACH THIRD POINT BETWEEN BARRIER RAIL EXPANSION JOINTS. ONLY ONE CONTRACTION JOINT IS REQUIRED AT MIDPOINT OF BARRIER RAIL SEGMENTS LESS THAN 20 FEET IN LENGTH AND NO CONTRACTION JOINTS ARE REQUIRED FOR THOSE SEGMENTS LESS THAN 10 FEET IN LENGTH.

#5 S1 AND #5 S2 BARS MAY BE SHIFTED, SLIGHTLY, AS NECESSARY TO AVOID 1/2" EXPANSION JOINT MATERIAL.

BAR TYPES

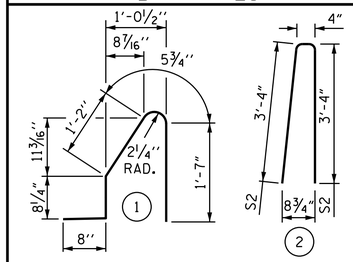

ALL BAR DIMENSIONS ARE OUT TO OUT.

BILL OF MATERIAL

FOR CONCRETE BARRIER RAIL ONLY

BAR	NO.	SIZE	TYPE	LENGTH	WEIGHT
* B1	66	#5	STR	28'-11"	1991
* B2	44	#5	STR	28'-0"	1285
* B3	44	#5	STR	25'-11"	1189
* B4	66	#5	STR	25'-5"	1750
* S1	550	#5	1	4'-7"	2629
* S2	550	#5	2	7'-0"	4016

* EPOXY COATED REINFORCING STEEL **	LBS.	12,860
CLASS AA CONCRETE **	CU. YDS.	75.0
CONCRETE BARRIER RAIL **	LIN. FT.	551.21

** QUANTITIES FOR BARRIER RAIL ON THE APPROACH SLABS ARE NOT INCLUDED. FOR BARRIER RAIL ON APPROACH SLABS, SEE "BRIDGE APPROACH SLAB DETAILS" SHEET 3 OF 3.

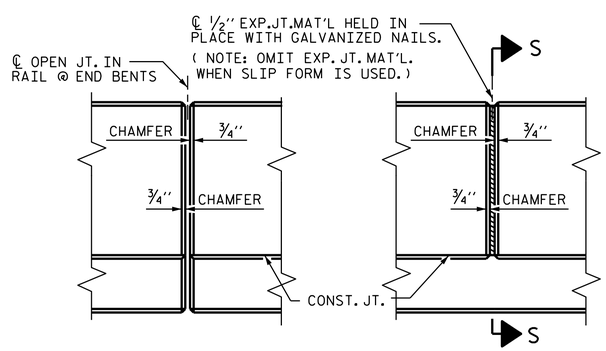

ELEVATION AT EXPANSION JOINTS

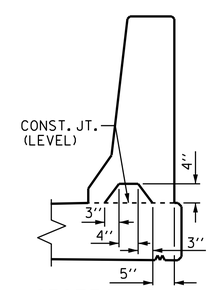

SECTION S-S

AT DAM IN OPEN JOINT (THIS IS TO BE USED ONLY WHEN SLIP FORM IS USED)

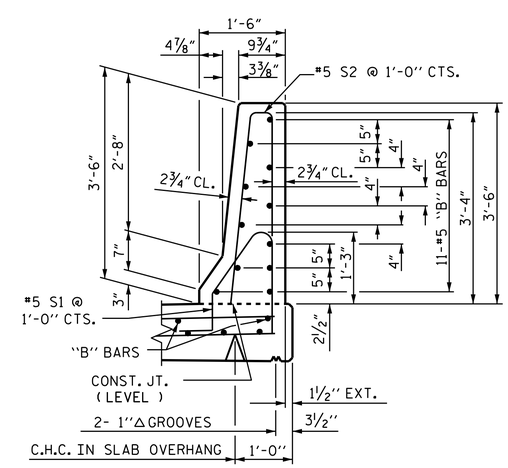

SECTION THRU RAIL

BARRIER RAIL DETAILS

PROJECT NO. U-2579B

FORSYTH COUNTY

STATION: 584+36.24 -L-

STATE OF NORTH CAROLINA
DEPARTMENT OF TRANSPORTATION
RALEIGH

STANDARD

CONCRETE BARRIER RAIL

(LEFT LANE)

NORTH CAROLINA PROFESSIONAL SEAL 23371 ENGINEER VIPUL A. PATEL

DocuSigned by: Vipul A. Patel 1C157DE15D4A0AA... 7/29/2014

REVISIONS								SHEET NO.
NO.	BY:	DATE:	NO.	BY:	DATE:			S-160
1			3					TOTAL SHEETS
2			4					707

STR. #5

STD. NO. CBR1

ASSEMBLED BY : T. H. CARROLL		DATE : 11/25/13	
CHECKED BY : P. S ADKINS		DATE : 12/30/13	
DRAWN BY : ARB 5/87	REV. 10/1/11	MAA/GM	
CHECKED BY : SJD 9/87	REV. 7/12	MAA/GM	
	REV. 6/13	MAA/GM	

28-JUL-2014 16:31
R:\Structures\Plans\Str05\U2579B_SD_BR_05.dgn
lsutton