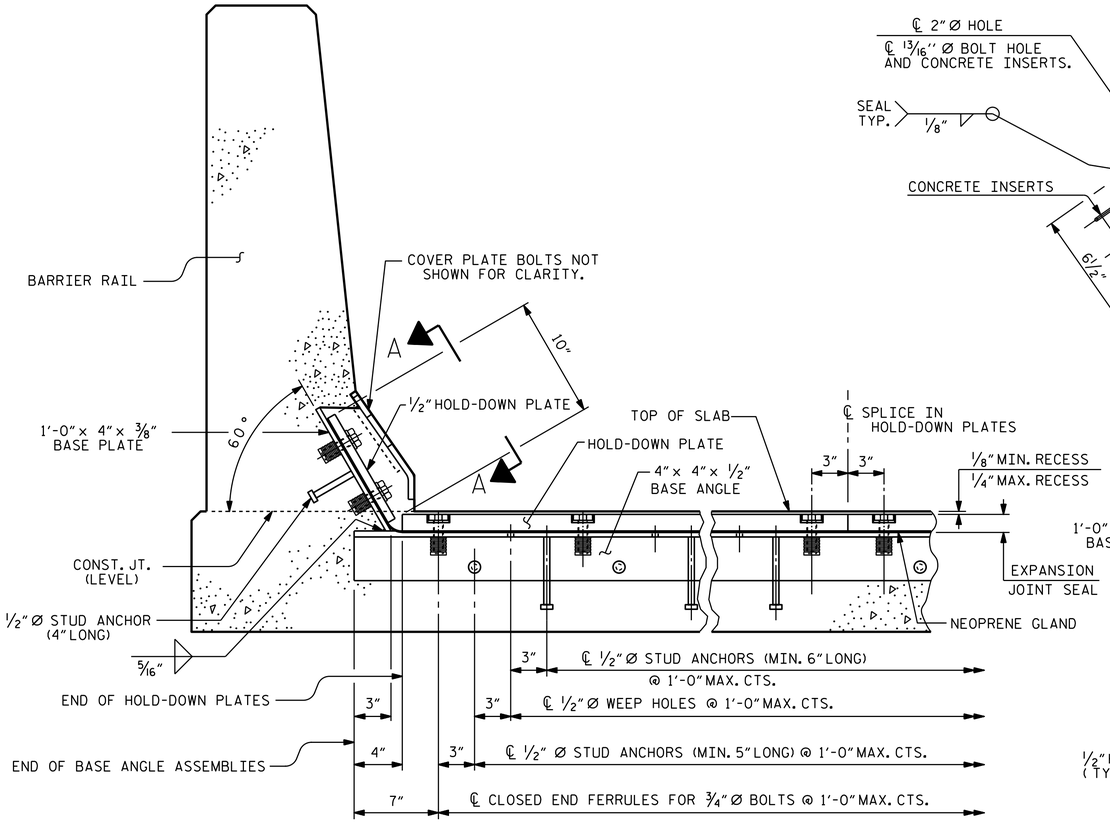

SECTION THRU RAIL NORMAL TO JOINT

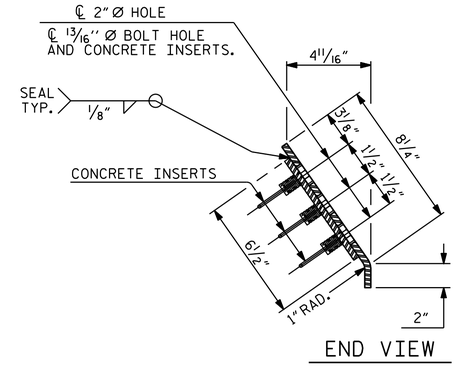

END VIEW

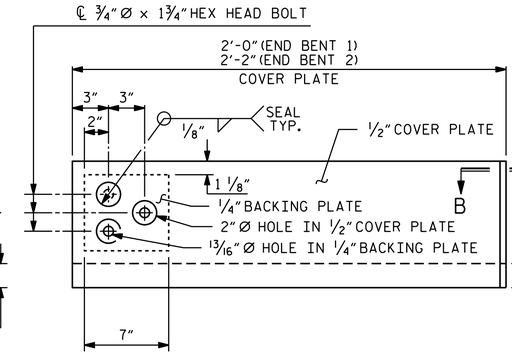

TYPE I - ELEVATION VIEW

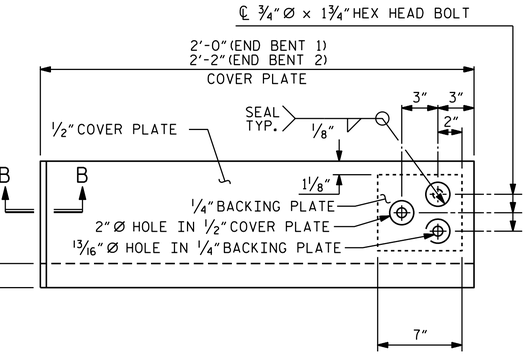

TYPE II - ELEVATION VIEW

COVER PLATE DETAILS

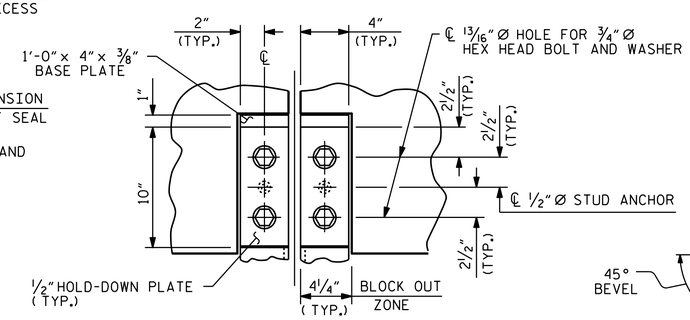

SECTION A - A

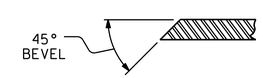

SECTION B - B

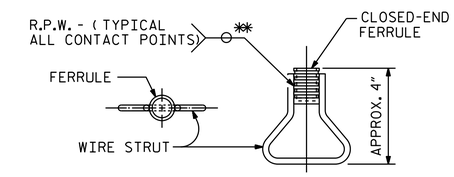

CONCRETE INSERT

** EACH WELDED ATTACHMENT OF WIRE TO FERRULE SHALL DEVELOP THE TENSILE STRENGTH OF THE WIRE.

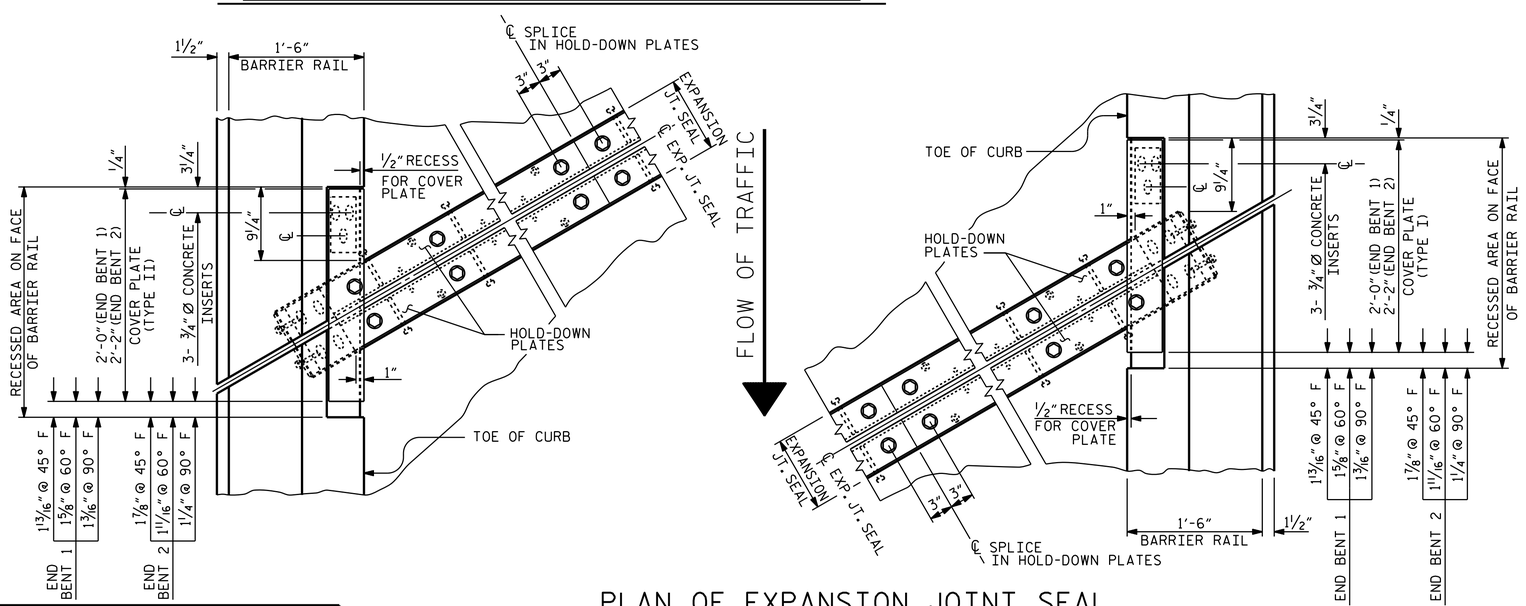

PLAN OF EXPANSION JOINT SEAL

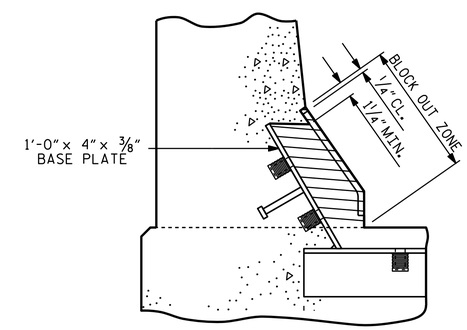

BLOCK OUT DETAIL

SEE "SECTION A - A" FOR OTHER DETAILS.

PROJECT NO. U-2579B

FORSYTH COUNTY

STATION: 584+36.24 -L-

SHEET 2 OF 2

STATE OF NORTH CAROLINA
DEPARTMENT OF TRANSPORTATION
RALEIGH

STANDARD

EXPANSION JOINT SEAL DETAILS FOR BARRIER RAIL

(LEFT LANE)

NORTH CAROLINA PROFESSIONAL SEAL 23371 ENGINEER VIPUL A. PATEL

DocuSigned by: Vipul A. Patel 1C157DE15D464AA... 7/29/2014

REVISIONS						SHEET NO.
NO.	BY:	DATE:	NO.	BY:	DATE:	S-163
1			3			TOTAL SHEETS
2			4			707

STR. #5

STD. NO. EJS2

ASSEMBLED BY :	T. H. CARROLL	DATE :	10/18/13
CHECKED BY :	P. S. ADKINS	DATE :	12/30/13

DRAWN BY :	REK	9/87	REV. 10/1/11	MAA/GM
CHECKED BY :	CRK	10/87	REV. 7/12	MAA/GM
			REV. 6/13	MAA/GM

DESIGN ENGINEER OF RECORD: H. A. LOCKLEAR DATE : 6/4/14

28-JUL-2014 16:31
R:\Structures\Plans\Str05\U2579B_SD_JS_05.dgn
lsutton