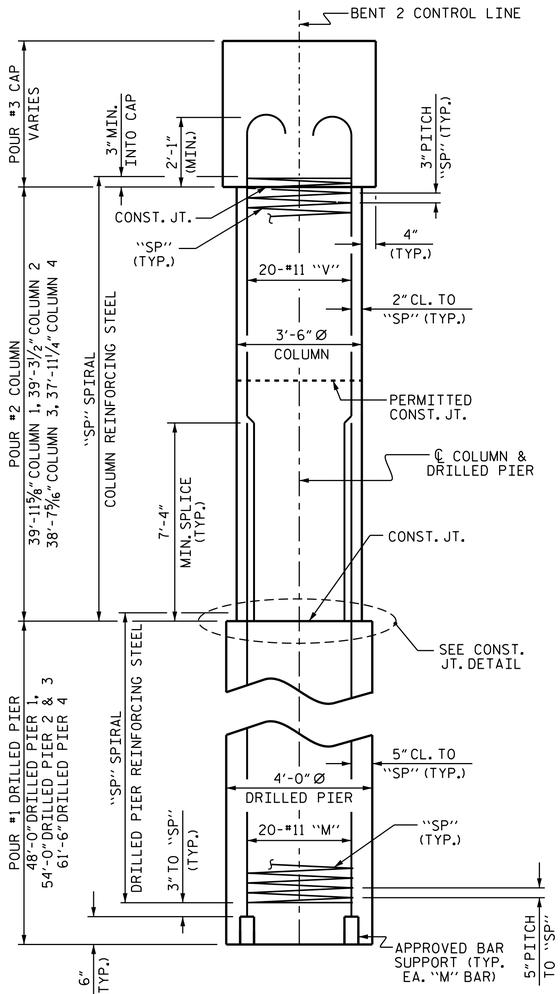

END ELEVATION

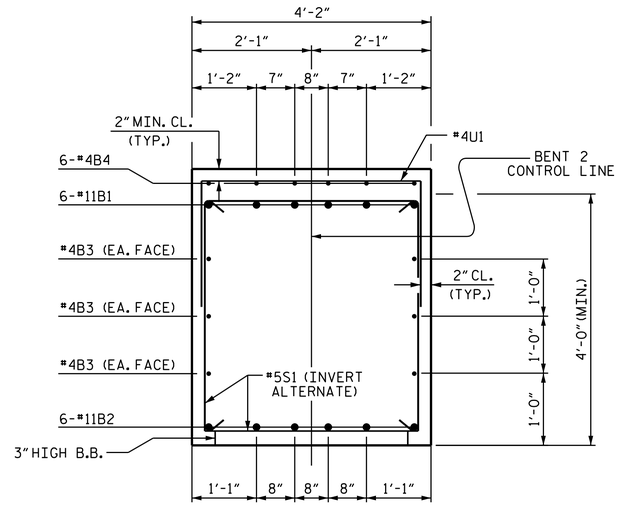

SECTION A-A

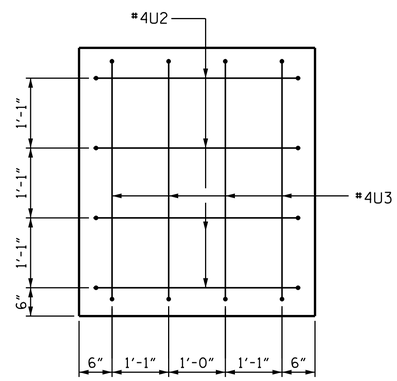

END VIEW

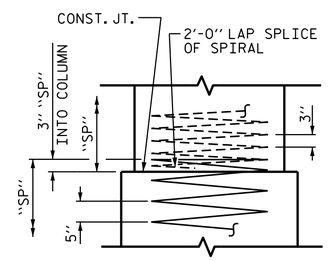

CONSTRUCTION JOINT DETAIL

BAR TYPES

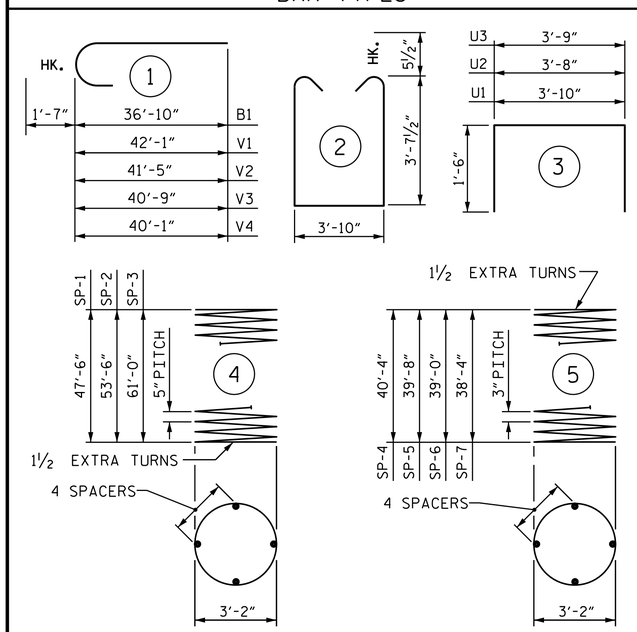

ALL BAR DIMENSIONS ARE OUT TO OUT.

* THE SP-1 THRU SP-3 SPIRAL REINFORCING STEEL SHALL BE W31 OR D-31 COLD DRAWN WIRE OR #5 PLAIN OR DEFORMED BAR.

** THE SP-4 THRU SP-7 SPIRAL REINFORCING STEEL SHALL BE W20 OR D-20 COLD DRAWN WIRE OR #4 PLAIN OR DEFORMED BAR.

BILL OF MATERIAL

BENT 2

BAR	NO.	SIZE	TYPE	LENGTH	WEIGHT
B1	12	#11	1	38'-5"	2449
B2	12	#11	STR	35'-0"	2231
B3	18	#4	STR	21'-9"	262
B4	30	#4	STR	6'-8"	134
B5	6	#4	STR	3'-11"	16
M1	20	#11	STR	58'-1"	6172
M2	80	#11	STR	35'-9"	15195
M3	40	#11	STR	39'-6"	8395
S1	78	#5	2	12'-0"	976
U1	52	#4	3	6'-10"	237
U2	8	#4	3	6'-8"	36
U3	8	#4	3	6'-9"	36
V1	20	#11	1	43'-8"	4640
V2	20	#11	1	43'-0"	4569
V3	20	#11	1	42'-4"	4498
V4	20	#11	1	41'-8"	4427
REINFORCING STEEL				LBS.	54,273
SP-1	1	*	4	1131'-2"	1180
SP-2	2	*	4	1273'-3"	2656
SP-3	1	*	4	1449'-6"	1512
SP-4	1	**	5	1600'-10"	1069
SP-5	1	**	5	1573'-10"	1051
SP-6	1	**	5	1546'-10"	1033
SP-7	1	**	5	1522'-3"	1017
SPIRAL COLUMN REINFORCING STEEL				LBS.	9,518

CLASS A CONCRETE BREAKDOWN		
POUR #2 - COLUMNS	C.Y.	55.6
POUR #3 - CAP	C.Y.	39.5
TOTAL CLASS A CONCRETE	C.Y.	95.1
DRILLED PIER QUANTITIES:		
DRILLED PIER CONCRETE POUR #1 - DRILLED PIERS	C.Y.	101.2
4'-0" Ø DRILLED PIERS IN SOIL	LIN. FT.	179.50
4'-0" Ø DRILLED PIERS NOT IN SOIL	LIN. FT.	38.00
PERMANENT STEEL CASING FOR 4'-0" Ø DRILLED PIER	LIN. FT.	24.00
CSL TUBES	LIN. FT.	894.00

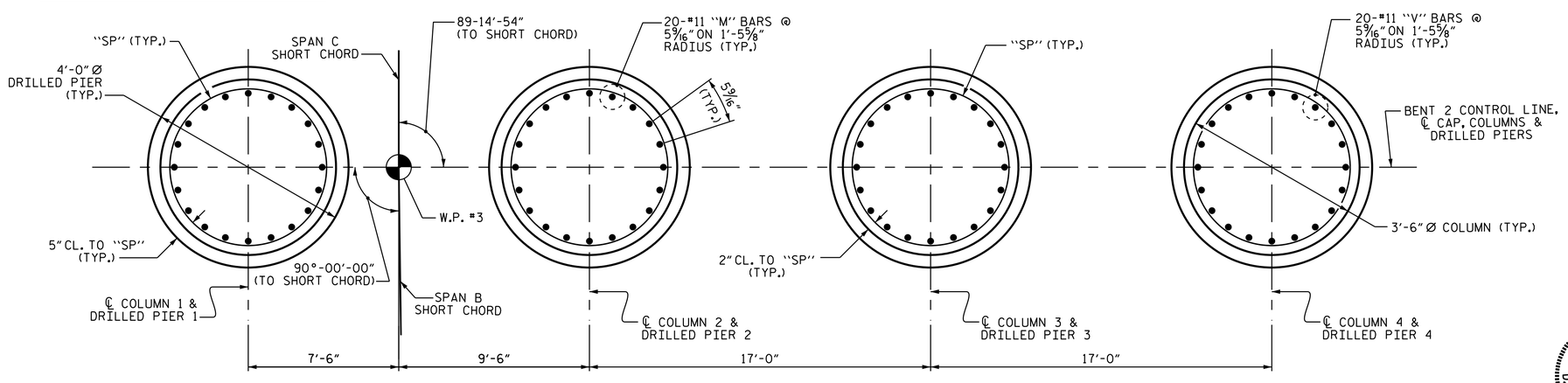

PLAN OF COLUMNS & DRILLED PIERS

(REINFORCING STEEL & DIMENSIONS ARE TYPICAL FOR EACH COLUMN & DRILLED PIER)

PROJECT NO. U-2579B

FORSYTH COUNTY

STATION: 556+85.00 -L-

SHEET 2 OF 2

STATE OF NORTH CAROLINA
DEPARTMENT OF TRANSPORTATION
RALEIGH

SUBSTRUCTURE

BENT 2

(RIGHT LANE)

NORTH CAROLINA PROFESSIONAL SEAL 10730 ENGINEER D. ANDRE DAVENPORT, JR.

DocuSigned by: D. Andre Davenport, Jr. 8/4/2014
B95DC284F664495...

REVISIONS						SHEET NO.
NO.	BY:	DATE:	NO.	BY:	DATE:	S-134
1			3			TOTAL SHEETS
2			4			707

STR. #4

DRAWN BY : R. P. PATEL DATE : 3-12-14
CHECKED BY : K. D. LAYNE DATE : 3-12-14
DESIGN ENGINEER OF RECORD: R. L. CHESSON DATE : 4-2-14

04-AUG-2014 13:45
R:\Structures\Plans\Str04\U2579B_SD_B*_04.dgn
lsutton