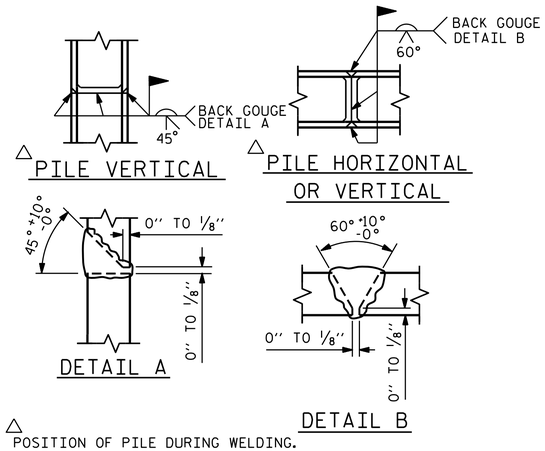

△ POSITION OF PILE DURING WELDING.

PILE SPLICE DETAILS

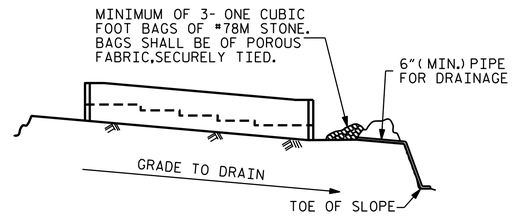

BAGGED STONE AND PIPE SHALL BE PLACED IMMEDIATELY AFTER COMPLETION OF END BENT EXCAVATION. PIPE MAY BE EITHER CONCRETE, CORRUGATED STEEL, CORRUGATED ALUMINUM ALLOY, OR CORRUGATED PLASTIC. PERFORATED PIPE WILL NOT BE ALLOWED.

BAGGED STONE SHALL REMAIN IN PLACE UNTIL THE ENGINEER DIRECTS THAT IT BE REMOVED. THE CONTRACTOR SHALL REMOVE AND DISPOSE OF SILT ACCUMULATIONS AT BAGGED STONE WHEN SO DIRECTED BY THE ENGINEER. BAGS SHALL BE REMOVED AND REPLACED WHENEVER THE ENGINEER DETERMINES THAT THEY HAVE DETERIORATED AND LOST THEIR EFFECTIVENESS.

NO SEPARATE PAYMENT WILL BE MADE FOR THIS WORK AND THE ENTIRE COST OF THIS WORK SHALL BE INCLUDED IN THE UNIT CONTRACT PRICE BID FOR THE SEVERAL PAY ITEMS.

TEMPORARY DRAINAGE AT END BENT

BAR TYPES

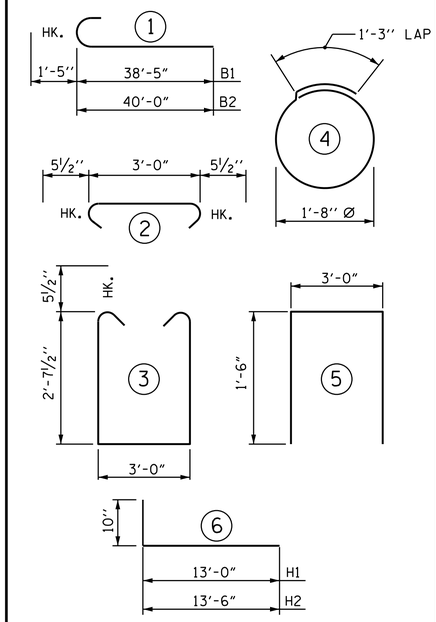

ALL BAR DIMENSIONS ARE OUT TO OUT.

BILL OF MATERIAL

END BENT 2

BAR	NO.	SIZE	TYPE	LENGTH	WEIGHT
B1	8	#10	1	39'-10"	1371
B2	8	#10	1	41'-5"	1426
B3	30	#4	STR	24'-8"	494
B4	18	#4	STR	3'-0"	36
B5	20	#4	STR	5'-10"	78
B6	4	#4	STR	11'-7"	31
H3	8	#5	6	13'-10"	115
H4	10	#5	6	14'-4"	150
S1	96	#5	3	9'-2"	918
S2	96	#5	2	3'-11"	392
S3	40	#4	4	6'-6"	174
U1	28	#4	5	6'-0"	112
V1	122	#4	STR	4'-10"	394
V2	24	#5	STR	8'-7"	215
V3	26	#5	STR	9'-0"	244

REINFORCING STEEL	LBS.	6,150
CLASS A CONCRETE	C.Y.	32.2
HP 12x53 STEEL PILES NO. 10	LIN. FT.	875

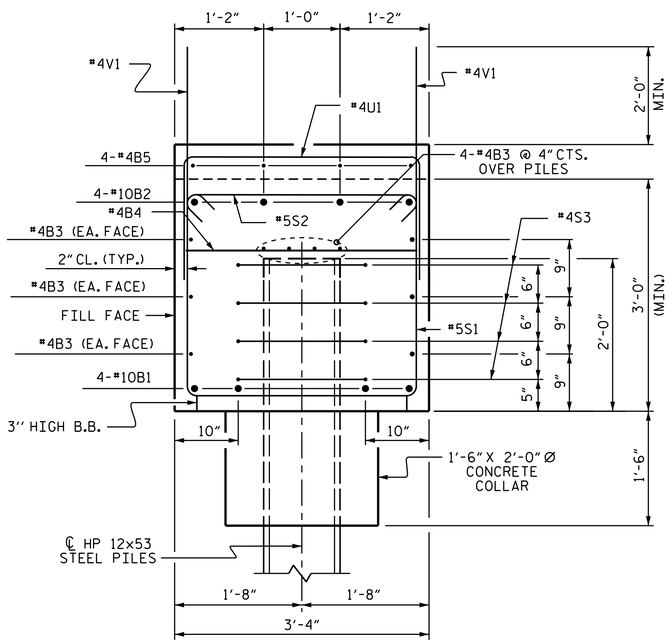

SECTION A-A

PROJECT NO. U-2579B

FORSYTH COUNTY

STATION: 556+85.00 -L-

SHEET 3 OF 3

STATE OF NORTH CAROLINA
DEPARTMENT OF TRANSPORTATION
RALEIGH

SUBSTRUCTURE

INTEGRAL
END BENT 2

(RIGHT LANE)

NORTH CAROLINA PROFESSIONAL SEAL 10730 ENGINEER D. ANDRE DAVENPORT JR.

DocuSigned by: D. André Davenport, Jr. 895DC284F664495... 8/4/2014

REVISIONS						SHEET NO.
NO.	BY:	DATE:	NO.	BY:	DATE:	S-137
1			3			TOTAL SHEETS
2			4			707

STR. #4

DRAWN BY : KEITH D. LAYNE DATE : 4-9-13
CHECKED BY : R. P. PATEL DATE : 6-11-13
DESIGN ENGINEER OF RECORD: G.W. DICKEY DATE : 4-22-14

04-AUG-2014 13:45
R:\Structures\Plans\Str04\U2579B_SD_E*_04.dgn
lsutton