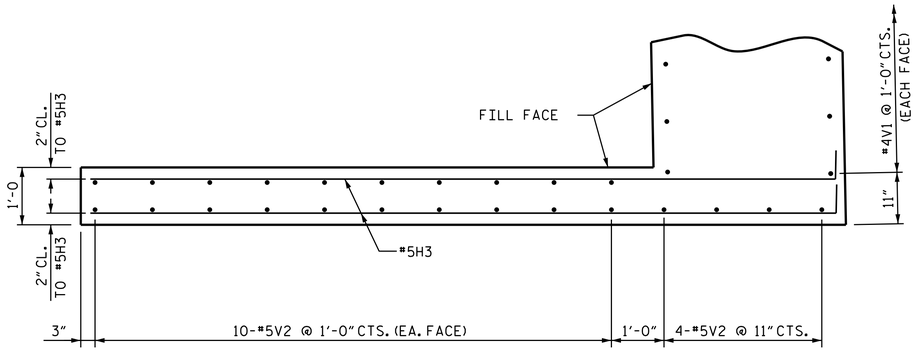

PLAN OF LEFT WING

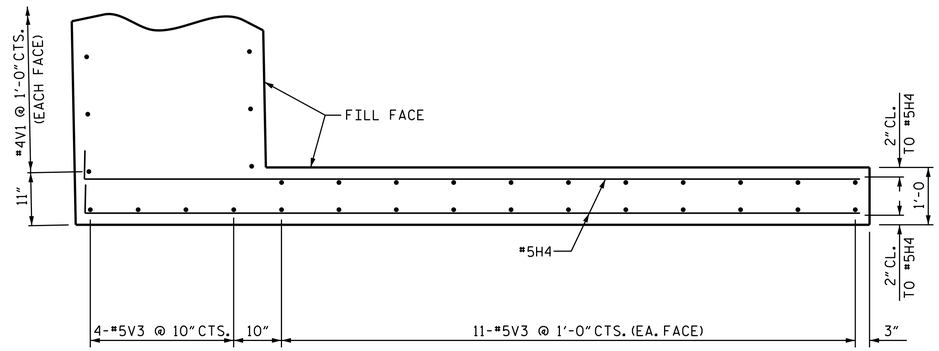

PLAN OF RIGHT WING

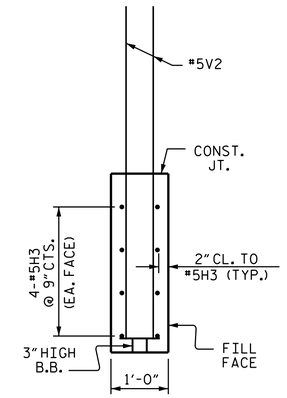

SECTION X-X

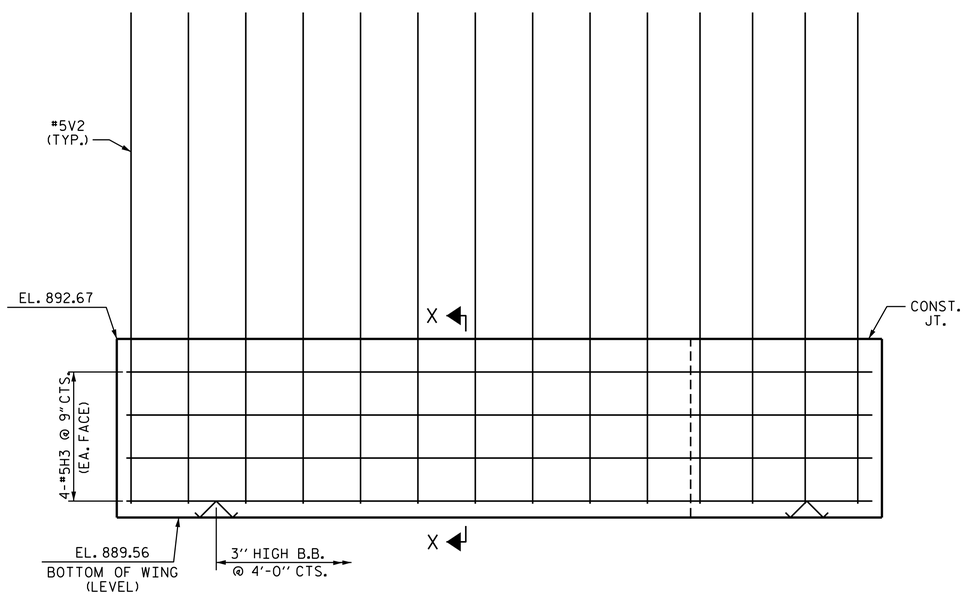

ELEVATION OF LEFT WING

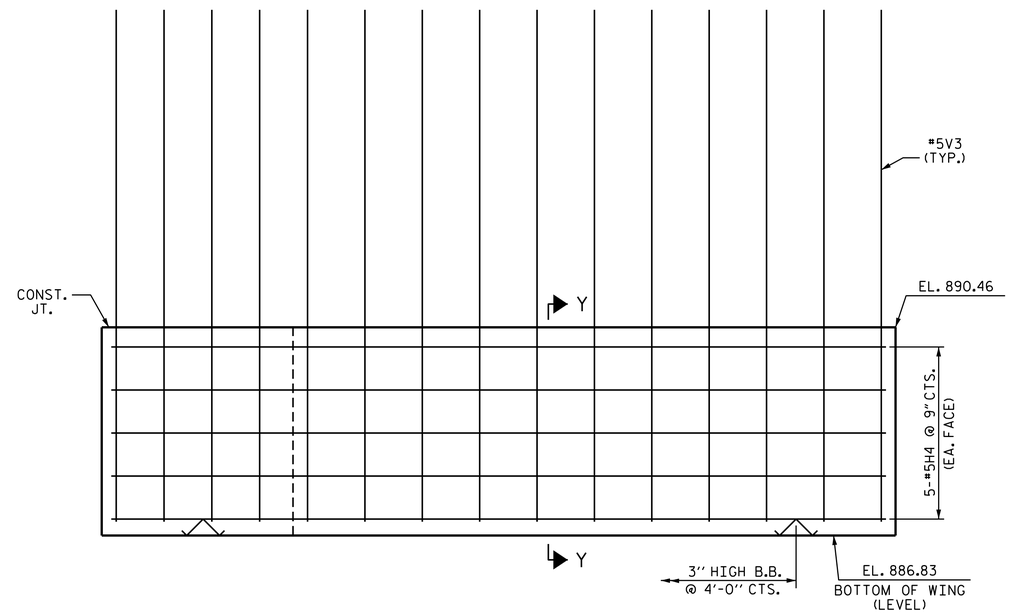

ELEVATION OF RIGHT WING

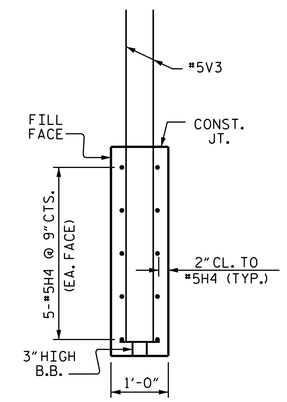

SECTION Y-Y

PROJECT NO. U-2579B

FORSYTH COUNTY

STATION: 556+85.00 -L-

SHEET 2 OF 3

STATE OF NORTH CAROLINA
DEPARTMENT OF TRANSPORTATION
RALEIGH

SUBSTRUCTURE

INTEGRAL END BENT 2

(RIGHT LANE)

NORTH CAROLINA PROFESSIONAL SEAL 10730 ENGINEER D. ANDRE DAVENPORT, JR.

DocuSigned by: D. Andre Davenport, Jr. 895DC284F664495... 8/4/2014

REVISIONS						SHEET NO.
NO.	BY:	DATE:	NO.	BY:	DATE:	S-136
1			3			TOTAL SHEETS
2			4			707

STR. #4

DRAWN BY :	KEITH D. LAYNE	DATE :	4-9-13
CHECKED BY :	R. P. PATEL	DATE :	6-11-13
DESIGN ENGINEER OF RECORD:	G.W. DICKEY	DATE :	4-22-14

04-AUG-2014 13:45
R:\Structures\Plans\Str04\U2579B_SD_E*_04.dgn
lsutton