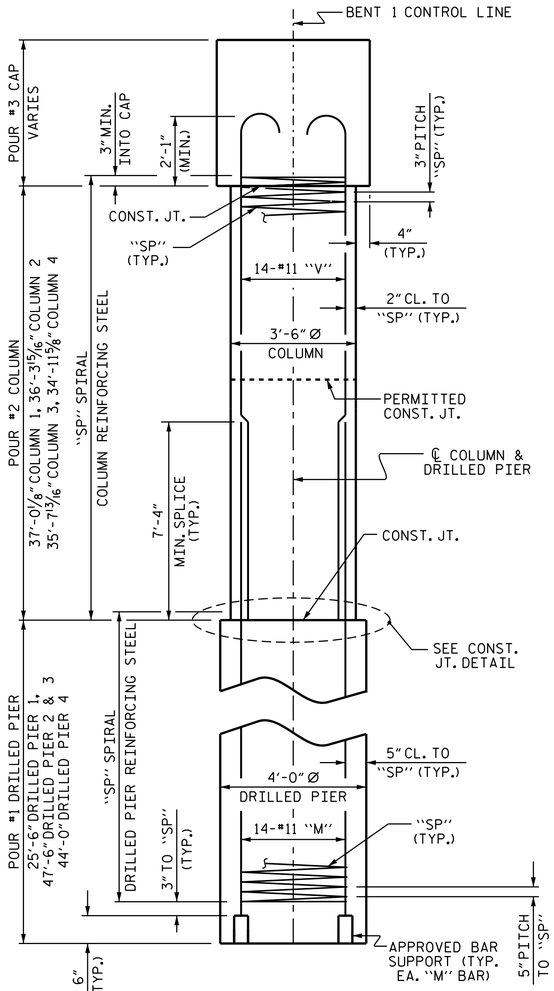

END ELEVATION

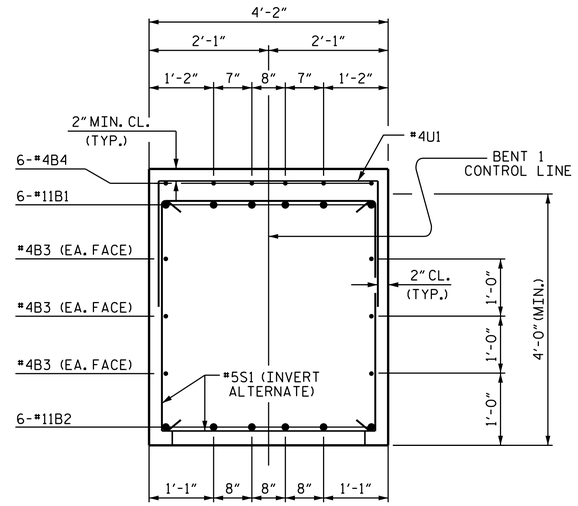

SECTION A-A

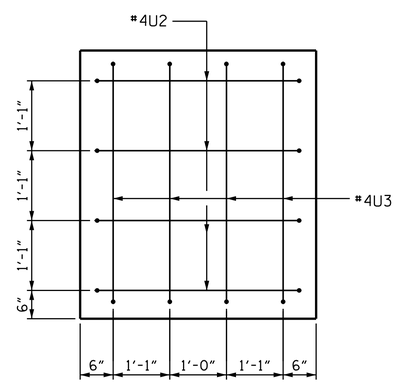

END VIEW

BAR TYPES

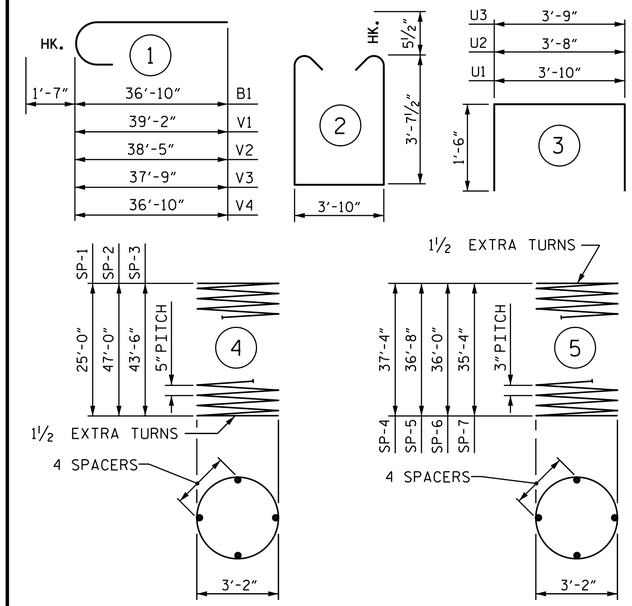

ALL BAR DIMENSIONS ARE OUT TO OUT.

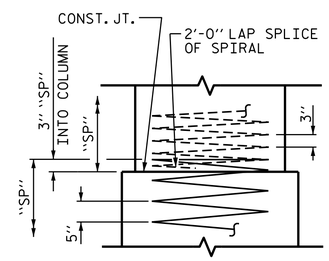

CONSTRUCTION JOINT DETAIL

✱ THE SP-1 THRU SP-3 SPIRAL REINFORCING STEEL SHALL BE W31 OR D-31 COLD DRAWN WIRE OR #5 PLAIN OR DEFORMED BAR.

✱✱ THE SP-4 THRU SP-7 SPIRAL REINFORCING STEEL SHALL BE W20 OR D-20 COLD DRAWN WIRE OR #4 PLAIN OR DEFORMED BAR.

BILL OF MATERIAL

BENT 1

BAR	NO.	SIZE	TYPE	LENGTH	WEIGHT
B1	12	#11	1	38'-5"	2449
B2	12	#11	STR	35'-0"	2231
B3	18	#4	STR	21'-9"	262
B4	30	#4	STR	6'-8"	134
B5	6	#4	STR	3'-11"	16
M1	14	#11	STR	35'-7"	2647
M2	28	#11	STR	57'-7"	8566
M3	14	#11	STR	54'-4"	4041
S1	78	#5	2	12'-0"	976
U1	52	#4	3	6'-10"	237
U2	8	#4	3	6'-8"	36
U3	8	#4	3	6'-9"	36
V1	14	#11	1	40'-9"	3031
V2	14	#11	1	40'-0"	2975
V3	14	#11	1	39'-4"	2926
V4	14	#11	1	38'-5"	2858
REINFORCING STEEL				LBS.	33,421
SP-1	1	✱	4	602'-4"	628
SP-2	2	✱	4	1121'-5"	2339
SP-3	1	✱	4	1038'-2"	1083
SP-4	1	✱✱	5	1483'-0"	991
SP-5	1	✱✱	5	1455'-11"	973
SP-6	1	✱✱	5	1428'-11"	955
SP-7	1	✱✱	5	1404'-5"	938
SPIRAL COLUMN REINFORCING STEEL				LBS.	7,907

CLASS A CONCRETE BREAKDOWN		
POUR #2 - COLUMNS	C.Y.	51.3
POUR #3 - CAP	C.Y.	39.6
TOTAL CLASS A CONCRETE	C.Y.	90.9
DRILLED PIER QUANTITIES:		
DRILLED PIER CONCRETE POUR #1 - DRILLED PIERS	C.Y.	76.6
4'-0" Ø DRILLED PIERS IN SOIL	LIN. FT.	129.50
4'-0" Ø DRILLED PIERS NOT IN SOIL	LIN. FT.	35.00
PERMANENT STEEL CASING FOR 4'-0" Ø DRILLED PIER	LIN. FT.	28.00
CSL TUBES	LIN. FT.	682.00

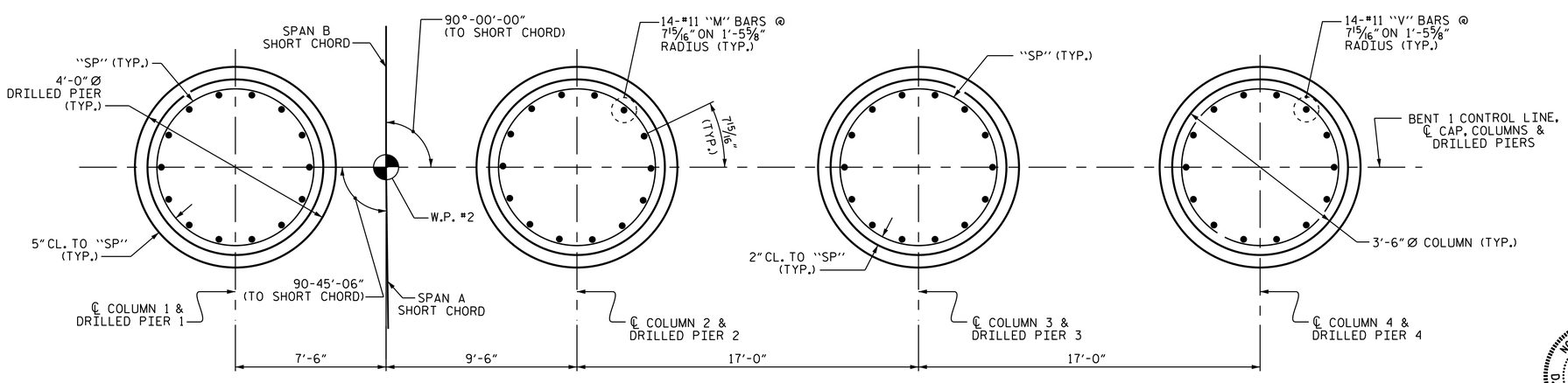

PLAN OF COLUMNS & DRILLED PIERS

(REINFORCING STEEL & DIMENSIONS ARE TYPICAL FOR EACH COLUMN & DRILLED PIER)

PROJECT NO. U-2579B
FORSYTH COUNTY
STATION: 556+85.00 -L-

SHEET 2 OF 2

STATE OF NORTH CAROLINA
DEPARTMENT OF TRANSPORTATION
RALEIGH

SUBSTRUCTURE

BENT 1

(RIGHT LANE)

NORTH CAROLINA PROFESSIONAL SEAL 10730 ENGINEER D. ANDRE DAVENPORT, JR.

DocuSigned by: D. André Davenport, Jr. 8/4/2014
895DC284F664495...

REVISIONS						SHEET NO.
NO.	BY:	DATE:	NO.	BY:	DATE:	S-132
1			3			TOTAL SHEETS
2			4			707

STR. #4

DRAWN BY : R. P. PATEL DATE : 3-12-14
CHECKED BY : K. D. LAYNE DATE : 3-12-14
DESIGN ENGINEER OF RECORD: R. L. CHESSON DATE : 4-2-14

04-AUG-2014 13:45
R:\Structures\Plans\Str04\U2579B_SD_B*_04.dgn
lsutton