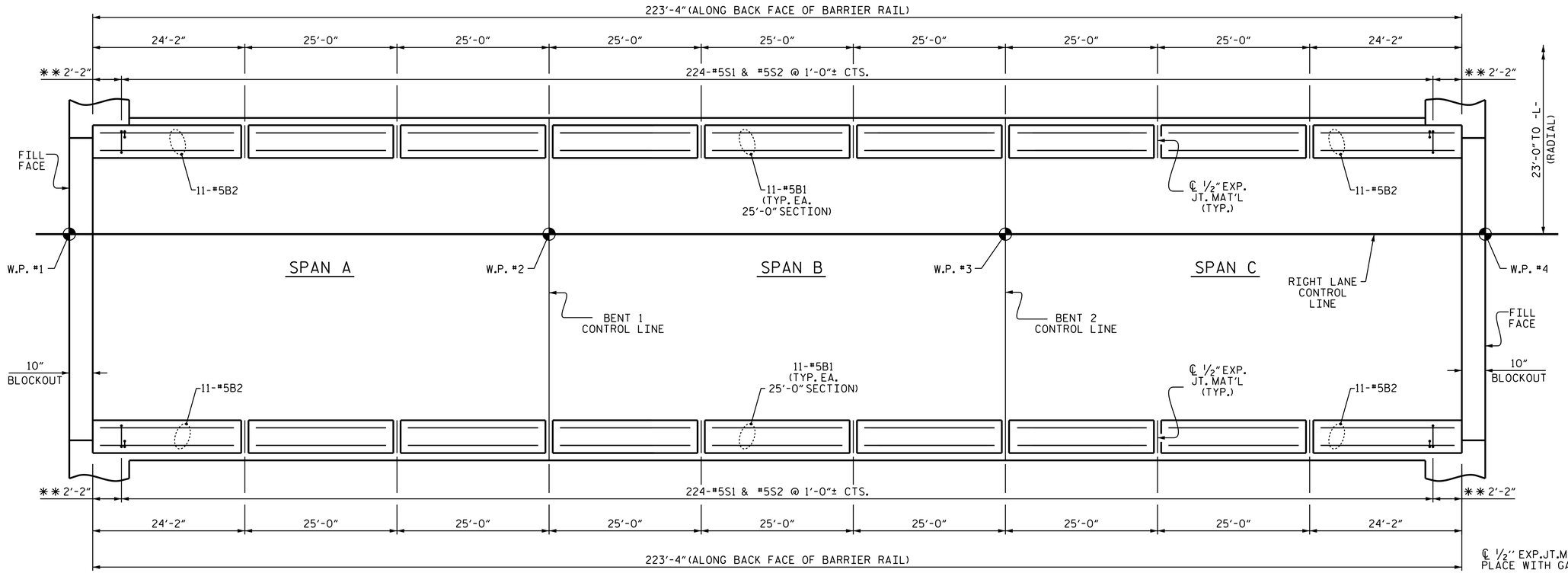

PLAN OF BARRIER RAIL

** SEE END OF RAIL DETAILS

℄ 1/2" EXP.JT.MAT'L HELD IN PLACE WITH GALVANIZED NAILS.
(NOTE: OMIT EXP. JT. MAT'L. WHEN SLIP FORM IS USED.)

BAR TYPES

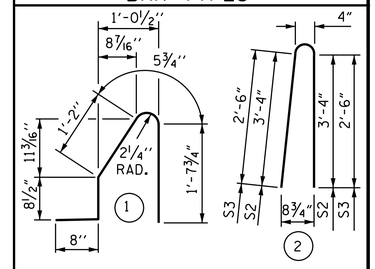

ALL BAR DIMENSIONS ARE OUT TO OUT.

BILL OF MATERIAL

FOR CONCRETE BARRIER RAIL ONLY

BAR	NO.	SIZE	TYPE	LENGTH	WEIGHT
* B1	154	#5	STR	24'-7"	3949
* B2	44	#5	STR	23'-9"	1090
* S1	448	#5	1	4'-8"	2181
* S2	440	#5	2	7'-0"	3212
* S3	8	#5	2	5'-4"	45

* EPOXY COATED REINFORCING STEEL LBS. 10,477
CLASS AA CONCRETE CU. YDS. 60.8
CONCRETE BARRIER RAIL LIN. FT. 446.67

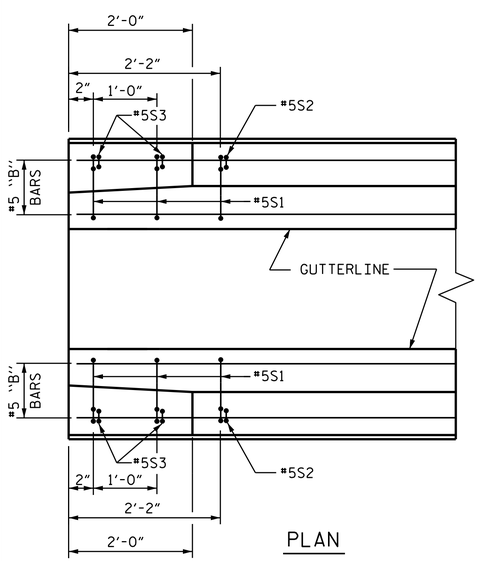

PLAN

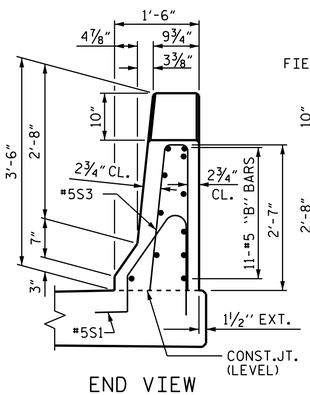

END VIEW

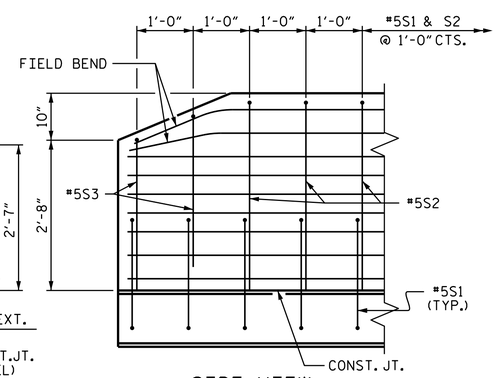

SIDE VIEW

END OF RAIL DETAILS

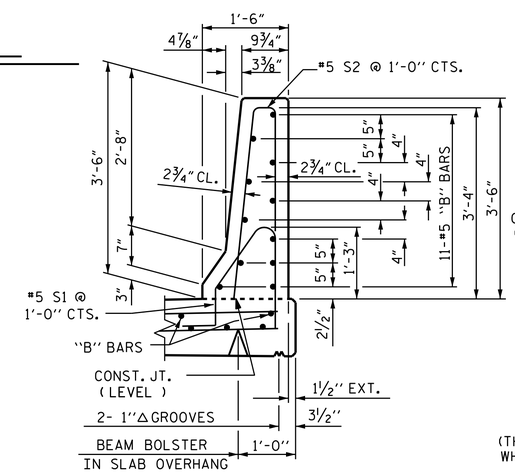

SECTION THRU RAIL

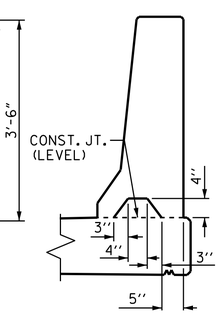

SECTION S-S

AT DAM IN OPEN JOINT
(THIS IS TO BE USED ONLY WHEN SLIP FORM IS USED)

BARRIER RAIL DETAILS

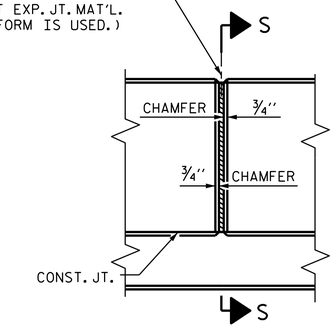

PROJECT NO. U-2579B
FORSYTH COUNTY
STATION: 556+85.00 -L-

NOTES

THE BARRIER RAIL IN A CONTINUOUS UNIT SHALL NOT BE CAST UNTIL ALL SLAB CONCRETE IN THAT UNIT HAS BEEN CAST AND HAS REACHED A MINIMUM COMPRESSIVE STRENGTH OF 3,000 PSI.

ALL REINFORCING STEEL IN BARRIER RAILS SHALL BE EPOXY COATED.

GROOVED CONTRACTION JOINTS, 1/2" IN DEPTH, SHALL BE TOOLED IN ALL EXPOSED FACES OF THE BARRIER RAIL AND IN ACCORDANCE WITH ARTICLE 825-10(B) OF THE STANDARD SPECIFICATIONS. THE CONTRACTION JOINT SHALL BE LOCATED AT EACH THIRD POINT BETWEEN BARRIER RAIL EXPANSION JOINTS. ONLY ONE CONTRACTION JOINT IS REQUIRED AT MIDPOINT OF BARRIER RAIL SEGMENTS LESS THAN 20 FEET IN LENGTH AND NO CONTRACTION JOINTS ARE REQUIRED FOR THOSE SEGMENTS LESS THAN 10 FEET IN LENGTH.

#5S1 AND #5S2 BARS MAY BE SHIFTED SLIGHTLY TO AVOID 1/2" EXPANSION JOINT.

NORTH CAROLINA PROFESSIONAL SEAL 10730 ENGINEER D. ANDRE DAVENPORT, JR.
DocuSigned by: D. André Davenport, Jr.
895DC284F664495...
8/4/2014

STATE OF NORTH CAROLINA
DEPARTMENT OF TRANSPORTATION
RALEIGH

STANDARD
CONCRETE BARRIER RAIL

(RIGHT LANE)

REVISIONS							SHEET NO.
NO.	BY:	DATE:	NO.	BY:	DATE:		S-125
1			3				TOTAL SHEETS
2			4				707

STR. #4 STD. NO. CBR1

ASSEMBLED BY : J.P. ADAMS		DATE : 8/20/12	
CHECKED BY : K.D. LAYNE		DATE : 5/2013	
DRAWN BY : ARB 5/87	REV. 10/1/11	MAA/GM	
CHECKED BY : SJD 9/87	REV. 7/12	MAA/GM	
	REV. 10/12	MAA/GM	

04-AUG-2014 13:45
R:\Structures\Plans\Str04\U2579B_SD_BR_04.dgn
lsutton