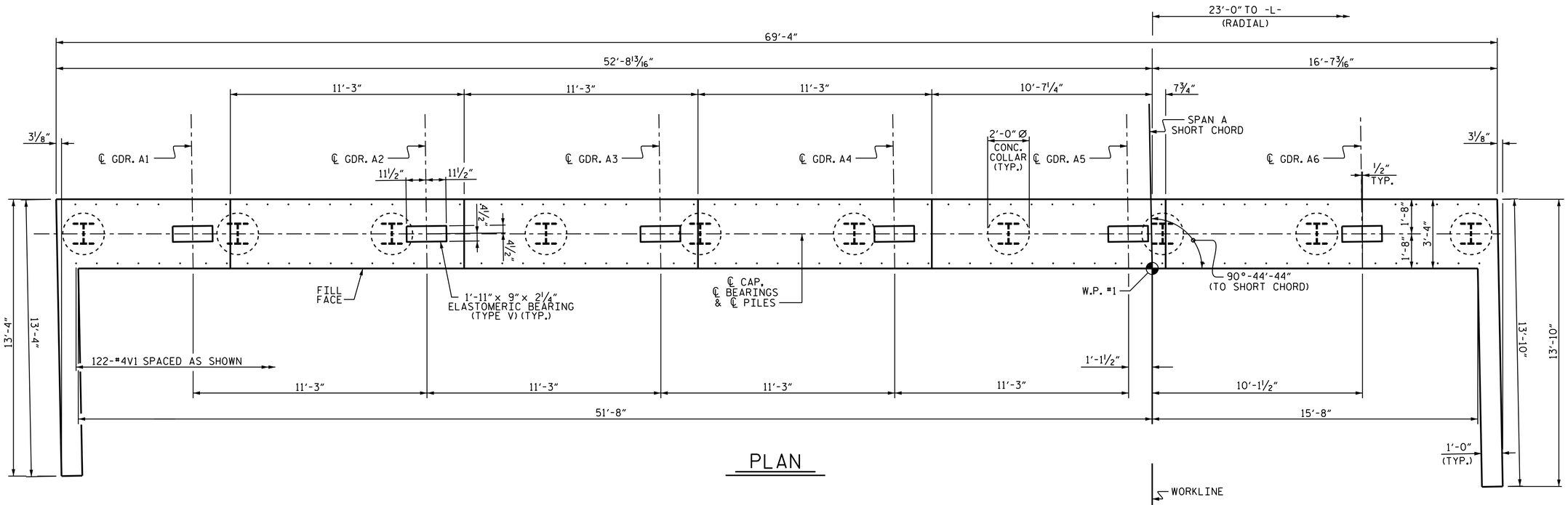

PLAN

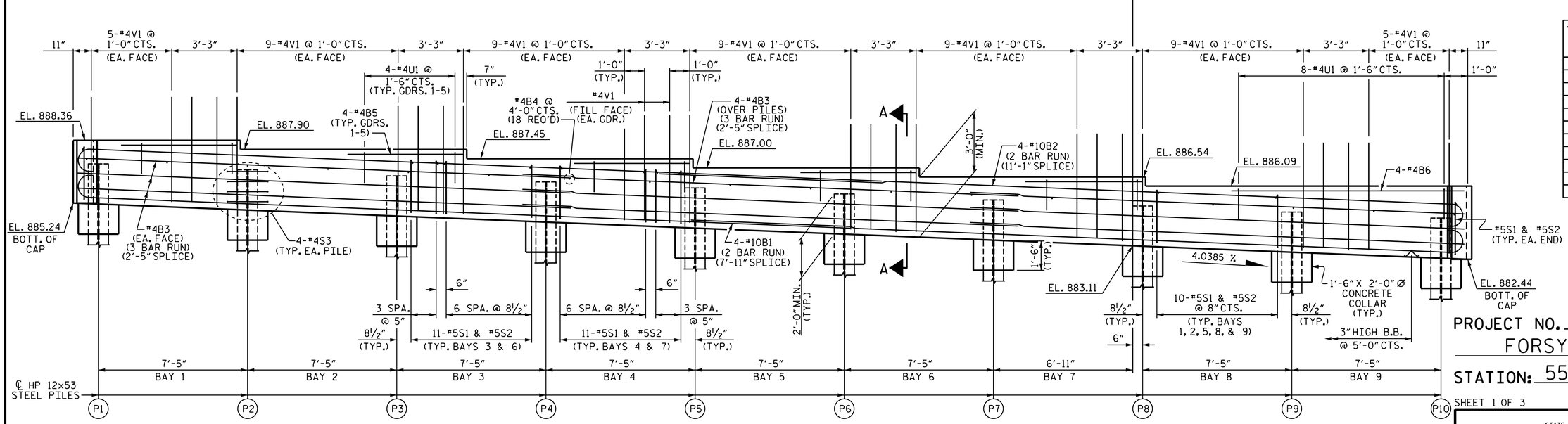

ELEVATION

NOTES

THE TOP SURFACE OF THE END BENT CAP AND WINGS, EXCEPT THE BEARING AREA, SHALL BE RAKED TO A DEPTH OF 1/4".

THE UPPER PORTION OF THE WINGS SHALL BE POURED WITH THE SUPERSTRUCTURE. CONCRETE AND REINFORCING STEEL QUANTITIES ARE INCLUDED IN THE SUPERSTRUCTURE BILL OF MATERIAL. FOR DETAILS, SEE SUPERSTRUCTURE PLANS.

INSTALL THE 4" DIA. DRAIN PIPE THROUGH THE WING WALL AS REQUIRED FOR REINFORCED BRIDGE APPROACH FILLS, SEE THE ROADWAY PLANS. REINFORCING STEEL IN THE WING WALL MAY BE SHIFTED AS NECESSARY TO CLEAR THE DRAIN PIPE.

TOP OF PILE ELEVATIONS

PILE	ELEVATION
P1	887.17
P2	886.87
P3	886.57
P4	886.27
P5	885.97
P6	885.67
P7	885.37
P8	885.07
P9	884.77
P10	884.47

PROJECT NO. U-2579B
FORSYTH COUNTY
STATION: 556+85.00 -L-

SHEET 1 OF 3

STATE OF NORTH CAROLINA
DEPARTMENT OF TRANSPORTATION
RALEIGH

SUBSTRUCTURE

INTEGRAL END BENT 1

(LEFT LANE)

NORTH CAROLINA PROFESSIONAL SEAL 10730 ENGINEER D. ANDRE DAVENPORT, JR.

DocuSigned by:
D. André Davenport, Jr.
895DC284F664495...
8/1/2014

REVISIONS						SHEET NO.
NO.	BY:	DATE:	NO.	BY:	DATE:	S-90
1			3			TOTAL SHEETS
2			4			707

STR. #3

DRAWN BY : KEITH D. LAYNE DATE : 4-9-13
CHECKED BY : R. P. PATEL DATE : 6-11-13
DESIGN ENGINEER OF RECORD: G.W. DICKEY DATE : 4-22-14

01-AUG-2014 09:36
R:\Structures\Plans\Str03\U2579B_SD_E*_03.dgn
lsutton