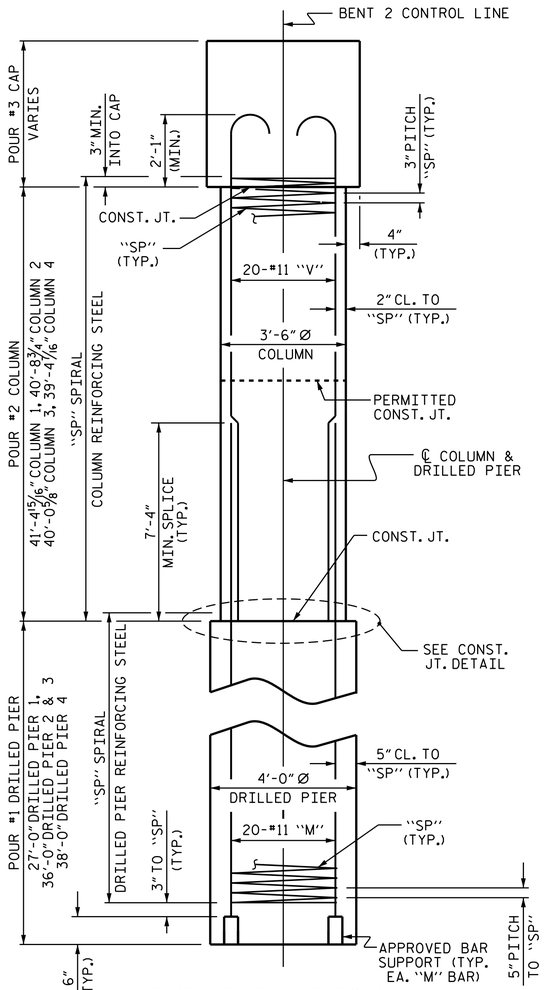

END ELEVATION

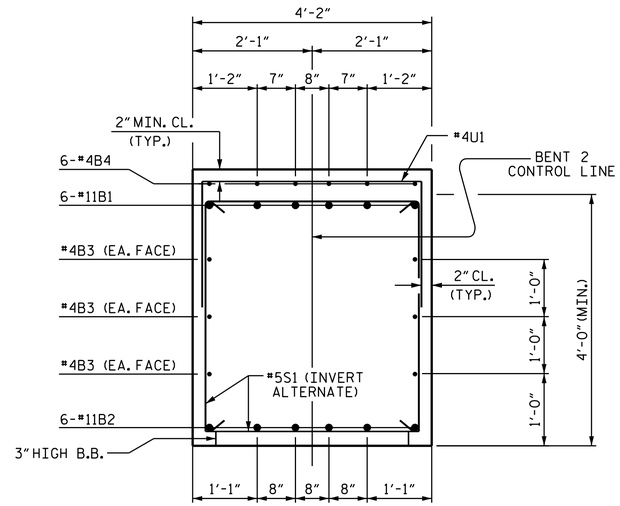

SECTION A-A

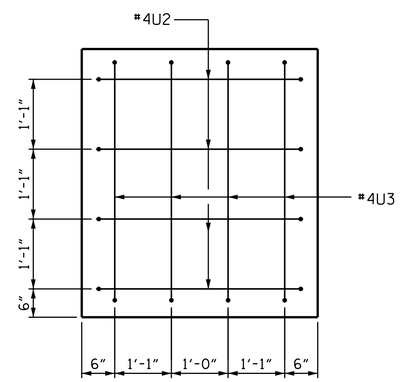

END VIEW

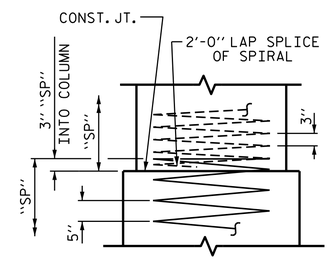

CONSTRUCTION JOINT DETAIL

BAR TYPES

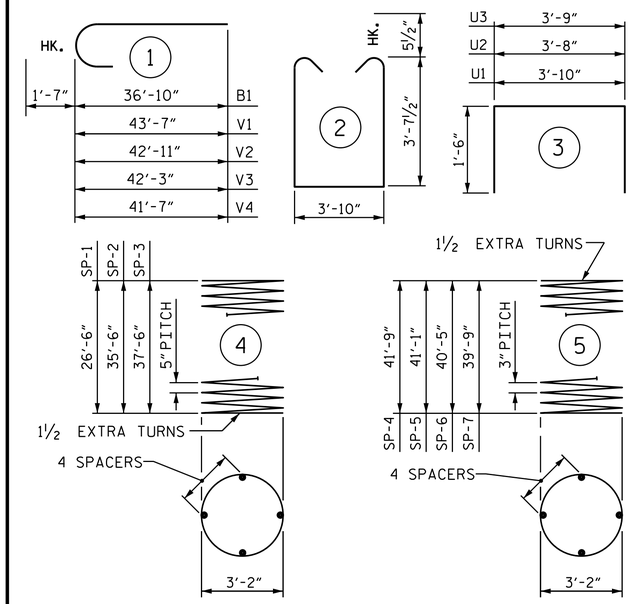

ALL BAR DIMENSIONS ARE OUT TO OUT.

* THE SP-1 THRU SP-3 SPIRAL REINFORCING STEEL SHALL BE W31 OR D-31 COLD DRAWN WIRE OR #5 PLAIN OR DEFORMED BAR.

** THE SP-4 THRU SP-7 SPIRAL REINFORCING STEEL SHALL BE W20 OR D-20 COLD DRAWN WIRE OR #4 PLAIN OR DEFORMED BAR.

BILL OF MATERIAL

BENT 2

BAR	NO.	SIZE	TYPE	LENGTH	WEIGHT
B1	12	#11	1	38'-5"	2449
B2	12	#11	STR	35'-0"	2231
B3	18	#4	STR	21'-9"	262
B4	30	#4	STR	6'-8"	134
B5	6	#4	STR	3'-11"	16
M1	20	#11	STR	37'-1"	3940
M2	40	#11	STR	46'-1"	9794
M3	20	#11	STR	48'-1"	5109
S1	78	#5	2	12'-0"	976
U1	52	#4	3	6'-10"	237
U2	8	#4	3	6'-8"	36
U3	8	#4	3	6'-9"	36
V1	20	#11	1	45'-2"	4799
V2	20	#11	1	44'-6"	4729
V3	20	#11	1	43'-10"	4658
V4	20	#11	1	43'-2"	4587
REINFORCING STEEL				LBS.	43,993
SP-1	1	*	4	639'-1"	667
SP-2	2	*	4	849'-8"	1772
SP-3	1	*	4	896'-2"	935
SP-4	1	**	5	1654'-10"	1105
SP-5	1	**	5	1630'-3"	1089
SP-6	1	**	5	1603'-3"	1071
SP-7	1	**	5	1516'-3"	1053
SPIRAL COLUMN REINFORCING STEEL				LBS.	7,692

CLASS A CONCRETE BREAKDOWN		
POUR #2 - COLUMNS	C.Y.	57.6
POUR #3 - CAP	C.Y.	39.6
TOTAL CLASS A CONCRETE	C.Y.	97.2
DRILLED PIER QUANTITIES:		
DRILLED PIER CONCRETE POUR #1 - DRILLED PIERS	C.Y.	63.8
4'-0" Ø DRILLED PIERS IN SOIL	LIN. FT.	95.00
4'-0" Ø DRILLED PIERS NOT IN SOIL	LIN. FT.	42.00
PERMANENT STEEL CASING FOR 4'-0" Ø DRILLED PIER	LIN. FT.	24.00
CSL TUBES	LIN. FT.	572.00

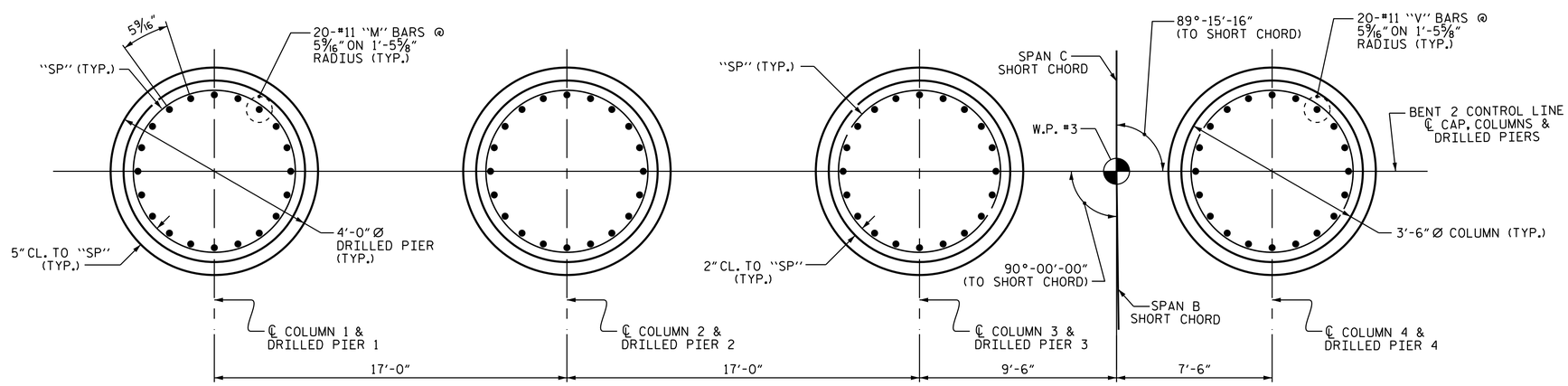

PLAN OF COLUMNS & DRILLED PIERS

(REINFORCING STEEL & DIMENSIONS ARE TYPICAL FOR EACH COLUMN & DRILLED PIER)

PROJECT NO. U-2579B

FORSYTH COUNTY

STATION: 556+85.00 -L-

SHEET 2 OF 2

STATE OF NORTH CAROLINA
DEPARTMENT OF TRANSPORTATION
RALEIGH

SUBSTRUCTURE

BENT 2

(LEFT LANE)

NORTH CAROLINA PROFESSIONAL SEAL 10730 ENGINEER D. ANDRÉ DAVENPORT, JR.

DocuSigned by: D. André Davenport, Jr. B95DC284F664495... 8/4/2014

REVISIONS						SHEET NO.
NO.	BY:	DATE:	NO.	BY:	DATE:	S-96
1			3			TOTAL SHEETS
2			4			707

STR.#3

DRAWN BY :	R. P. PATEL	DATE :	3-12-14
CHECKED BY :	K. D. LAYNE	DATE :	3-12-14
DESIGN ENGINEER OF RECORD:	R. L. CHESSON	DATE :	4-2-14

04-AUG-2014 13:18
R:\Structures\Plans\Str03\U2579B_SD_B*_03.dgn
lsutton