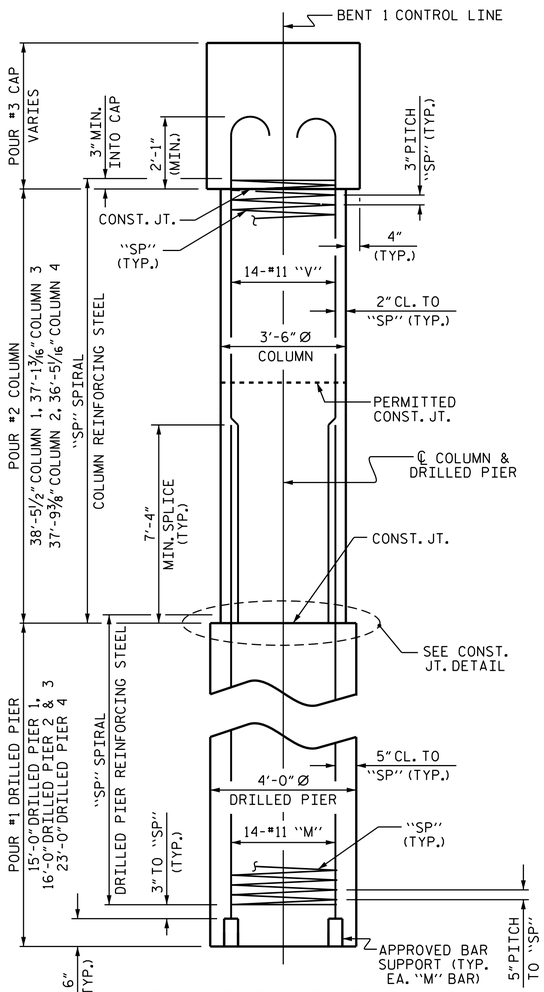

END ELEVATION

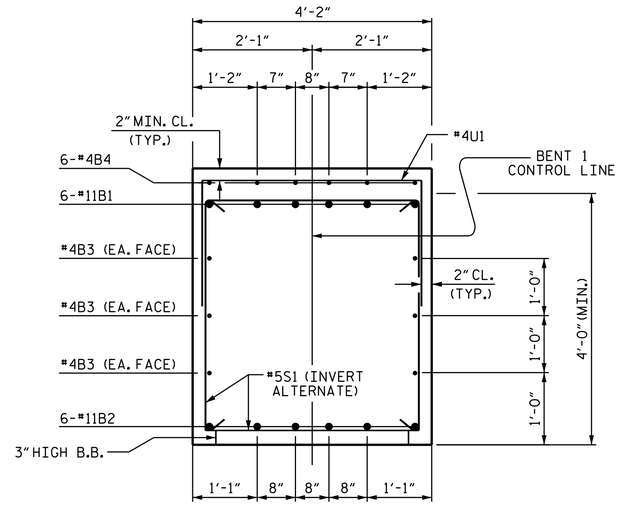

SECTION A-A

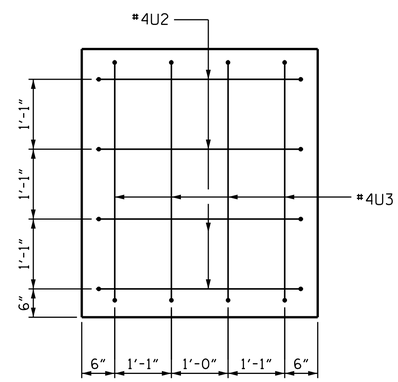

END VIEW

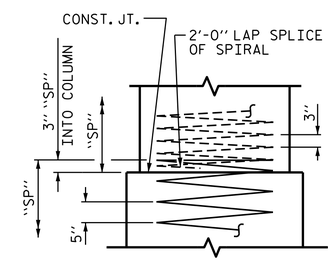

CONSTRUCTION JOINT DETAIL

BAR TYPES

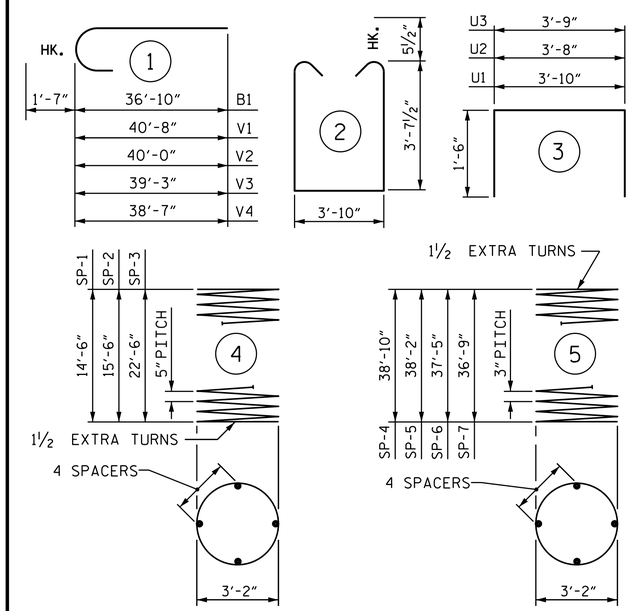

ALL BAR DIMENSIONS ARE OUT TO OUT.

* THE SP-1 THRU SP-3 SPIRAL REINFORCING STEEL SHALL BE W31 OR D-31 COLD DRAWN WIRE OR #5 PLAIN OR DEFORMED BAR.

** THE SP-4 THRU SP-7 SPIRAL REINFORCING STEEL SHALL BE W20 OR D-20 COLD DRAWN WIRE OR #4 PLAIN OR DEFORMED BAR.

BILL OF MATERIAL

BENT 1

BAR	NO.	SIZE	TYPE	LENGTH	WEIGHT
B1	12	#11	1	38'-5"	2449
B2	12	#11	STR	35'-0"	2231
B3	18	#4	STR	21'-9"	262
B4	30	#4	STR	6'-8"	134
B5	6	#4	STR	3'-11"	16
M1	14	#11	STR	25'-1"	1866
M2	28	#11	STR	26'-1"	3880
M3	14	#11	STR	33'-1"	2461
S1	78	#5	2	12'-0"	976
U1	52	#4	3	6'-10"	237
U2	8	#4	3	6'-8"	36
U3	8	#4	3	6'-9"	36
V1	14	#11	1	42'-3"	3143
V2	14	#11	1	41'-7"	3093
V3	14	#11	1	40'-10"	3037
V4	14	#11	1	40'-2"	2988
REINFORCING STEEL				LBS.	26,845
SP-1	1	*	4	357'-6"	373
SP-2	2	*	4	379'-7"	792
SP-3	1	*	4	543'-7"	567
SP-4	1	**	5	1541'-11"	1030
SP-5	1	**	5	1514'-11"	1012
SP-6	1	**	5	1485'-5"	992
SP-7	1	**	5	1458'-5"	974
SPIRAL COLUMN REINFORCING STEEL				LBS.	5,740
CLASS A CONCRETE BREAKDOWN					
POUR #2 - COLUMNS				C.Y.	53.4
POUR #3 - CAP				C.Y.	39.6
TOTAL CLASS A CONCRETE				C.Y.	93.0
DRILLED PIER QUANTITIES:					
DRILLED PIER CONCRETE POUR #1 - DRILLED PIERS				C.Y.	32.6
4'-0" Ø DRILLED PIERS IN SOIL				LIN. FT.	33.00
4'-0" Ø DRILLED PIERS NOT IN SOIL				LIN. FT.	37.00
PERMANENT STEEL CASING FOR 4'-0" Ø DRILLED PIER				LIN. FT.	28.00
CSL TUBES				LIN. FT.	304.00

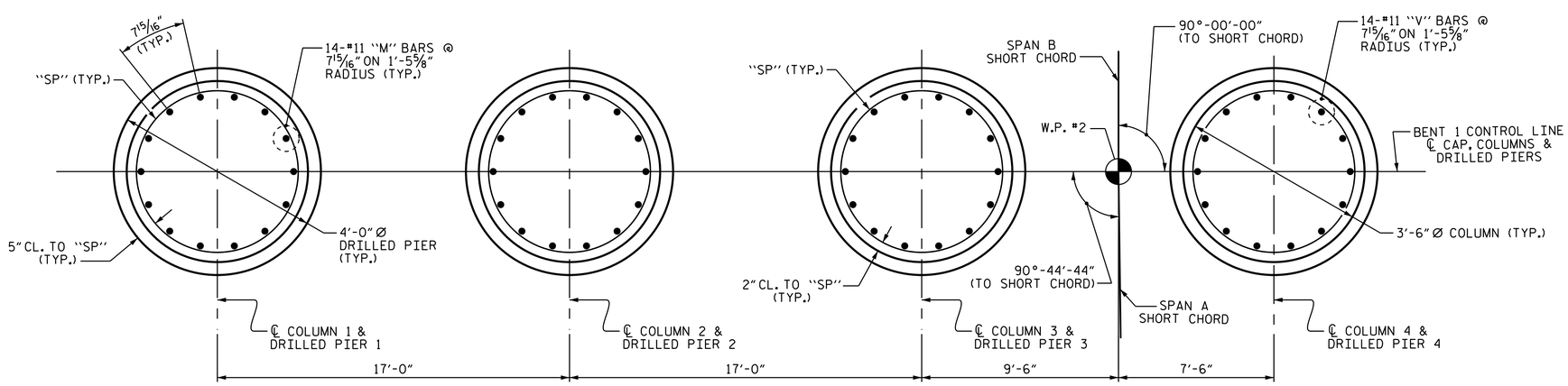

PLAN OF COLUMNS & DRILLED PIERS

(REINFORCING STEEL & DIMENSIONS ARE TYPICAL FOR EACH COLUMN & DRILLED PIER)

PROJECT NO. U-2579B

FORSYTH COUNTY

STATION: 556+85.00 -L-

SHEET 2 OF 2

STATE OF NORTH CAROLINA
DEPARTMENT OF TRANSPORTATION
RALEIGH

SUBSTRUCTURE

BENT 1

(LEFT LANE)

NORTH CAROLINA PROFESSIONAL SEAL 10730 ENGINEER D. ANDRE DAVENPORT, JR.

DocuSigned by: D. André Davenport, Jr. 8/4/2014
B95DC284F664495...

REVISIONS						SHEET NO.
NO.	BY:	DATE:	NO.	BY:	DATE:	S-94
1			3			TOTAL SHEETS
2			4			707

STR.#3

DRAWN BY :	R. P. PATEL	DATE :	3-12-14
CHECKED BY :	K. D. LAYNE	DATE :	3-12-14
DESIGN ENGINEER OF RECORD:	R. L. CHESSON	DATE :	4-2-14

04-AUG-2014 13:18
R:\Structures\Plans\Str03\U2579B_SD_B*_03.dgn
lsutton