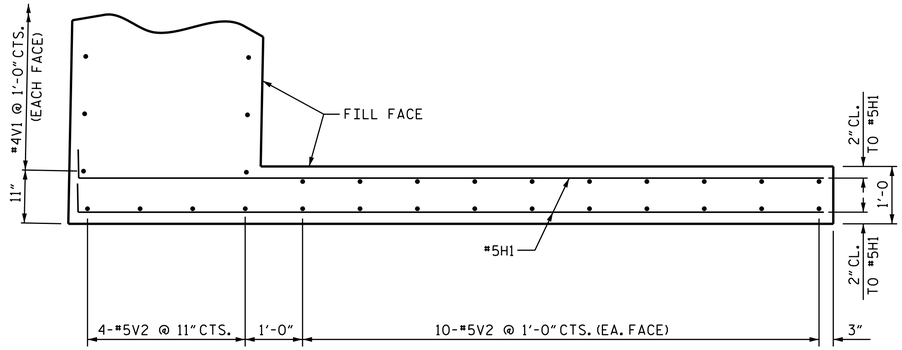

PLAN OF LEFT WING

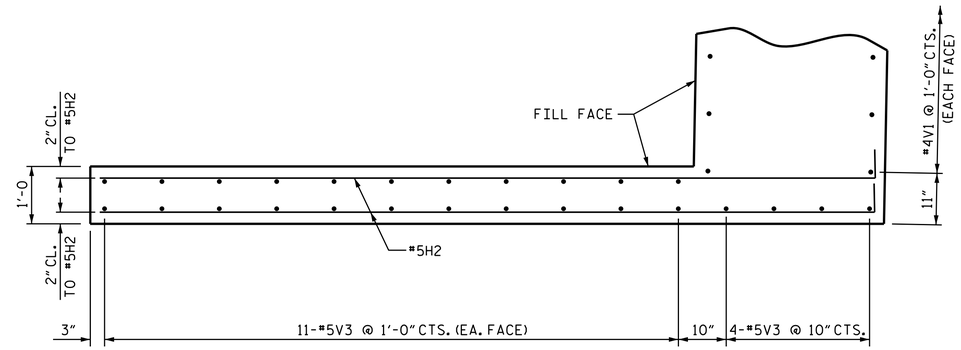

PLAN OF RIGHT WING

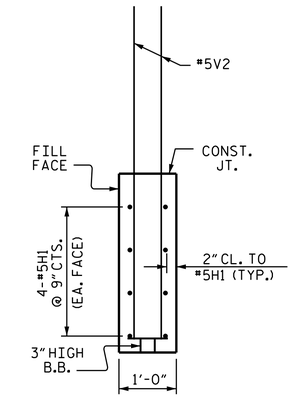

SECTION Y-Y

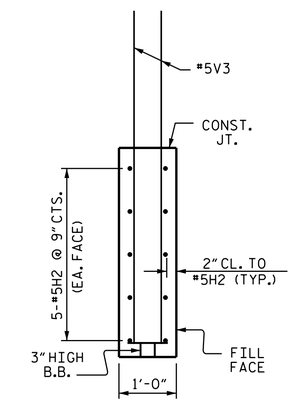

SECTION X-X

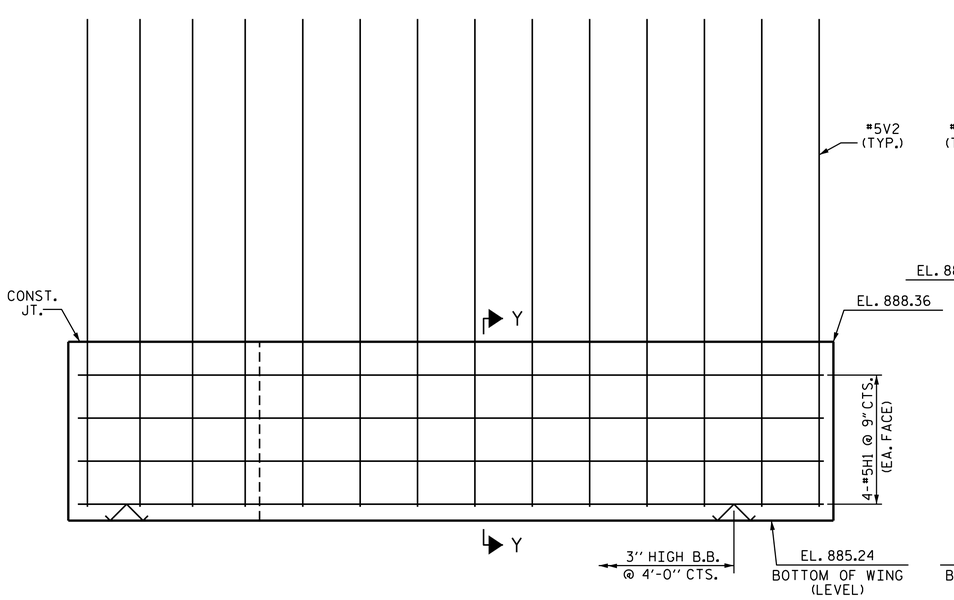

ELEVATION OF LEFT WING

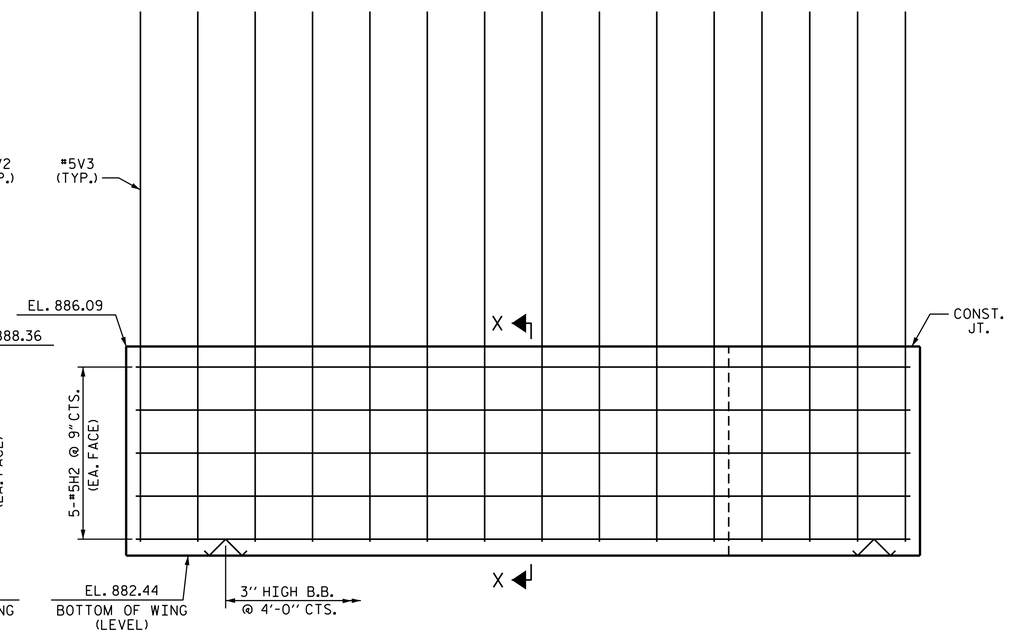

ELEVATION OF RIGHT WING

PROJECT NO. U-2579B

FORSYTH COUNTY

STATION: 556+85.00 -L-

SHEET 2 OF 3

STATE OF NORTH CAROLINA
DEPARTMENT OF TRANSPORTATION
RALEIGH

SUBSTRUCTURE

INTEGRAL END BENT 1

(LEFT LANE)

NORTH CAROLINA PROFESSIONAL SEAL 10730 ENGINEER D. ANDRÉ DAVENPORT, JR.

DocuSigned by: D. André Davenport, Jr. 895DC284F664495... 8/1/2014

REVISIONS						SHEET NO.
NO.	BY:	DATE:	NO.	BY:	DATE:	S-91
1			3			TOTAL SHEETS
2			4			707

STR. #3

DRAWN BY : KEITH D. LAYNE DATE : 4-9-13
CHECKED BY : R. P. PATEL DATE : 6-11-13
DESIGN ENGINEER OF RECORD: G.W. DICKEY DATE : 4-22-14

01-AUG-2014 09:36
R:\Structures\Plans\Str03\U2579B_SD_E*_03.dgn
lsutton