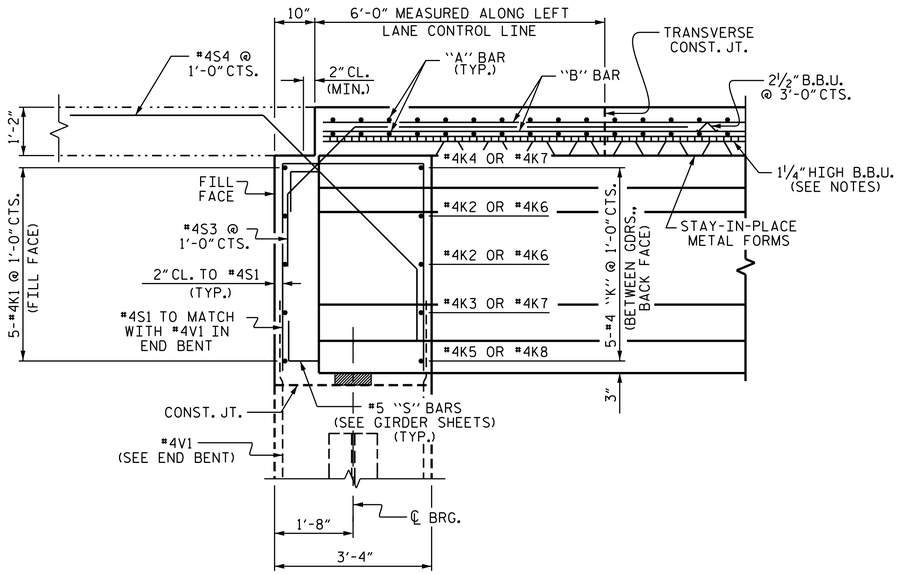

SECTION THRU INTEGRAL END BENT

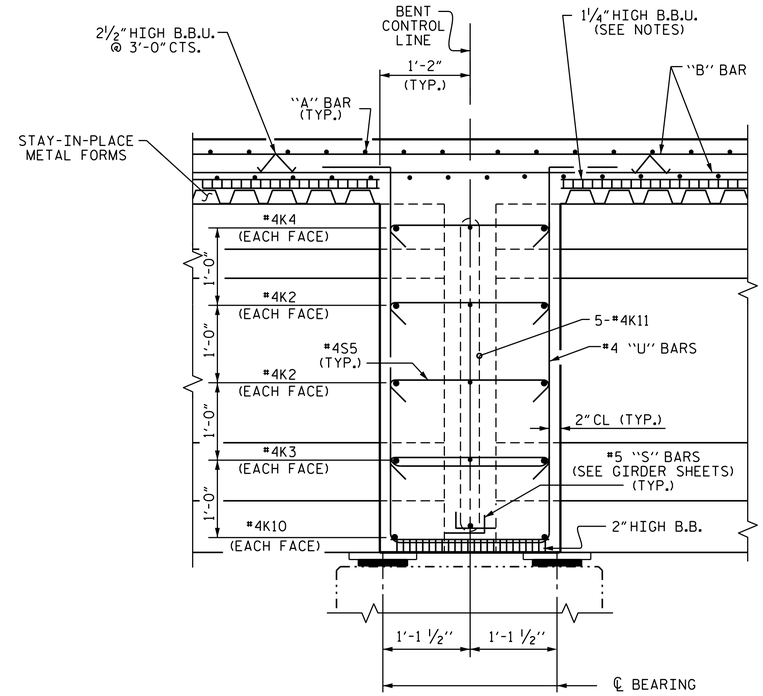

SECTION THRU BENT DIAPHRAGM

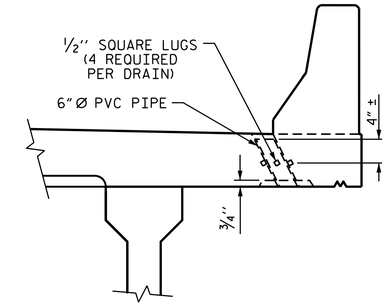

ELEVATION

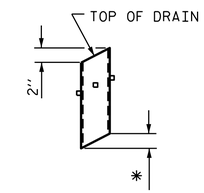

* TO BE SET TO MATCH SLOPE OF BOTTOM OF OVERHANG (15 DRAINS REQUIRED)

PIPE DETAIL

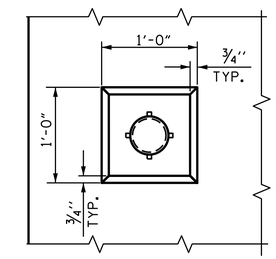

PLAN OF RECESS

TOP OF FLOOR DRAINS TO BE SET ⅜" BELOW SURFACE OF SLAB.

4 - ½" SQUARE LUGS TO BE GLUED TO THE P.V.C. PIPE AT EQUAL SPACES AROUND THE PIPE DRAIN APPROXIMATELY 4" FROM THE TOP OF THE PIPE.

THE 6" Ø PVC PIPE AND FITTINGS SHALL BE SCHEDULE 40 AND CONFORM TO ASTM D1785.

DRAIN DETAILS

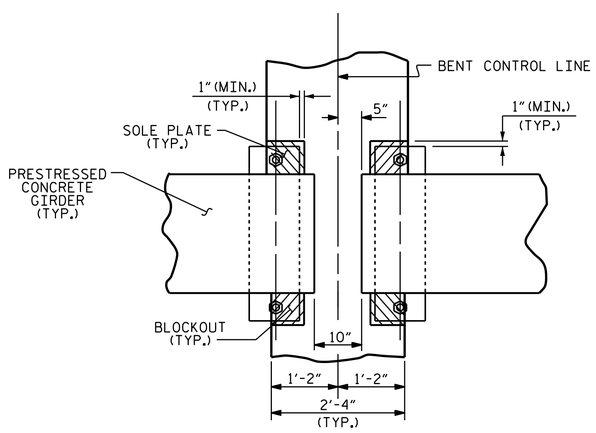

PLAN

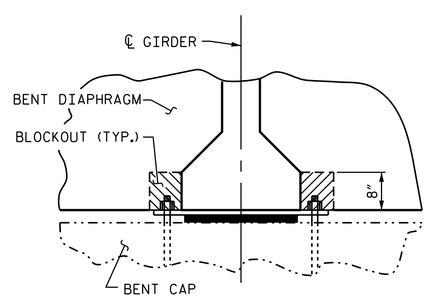

SECTION

BENT DIAPHRAGM BLOCK-OUT DETAIL

PROJECT NO. U-2579B
FORSYTH COUNTY
STATION: 556+85.00 -L-

SHEET 3 OF 3

STATE OF NORTH CAROLINA
DEPARTMENT OF TRANSPORTATION
RALEIGH

SUPERSTRUCTURE

TYPICAL SECTION

(LEFT LANE)

NORTH CAROLINA PROFESSIONAL SEAL 10730 ENGINEER D. ANDRÉ DAVENPORT, JR.

DocuSigned by: D. André Davenport, Jr. 895DC284F664495... 8/1/2014

REVISIONS						SHEET NO.
NO.	BY:	DATE:	NO.	BY:	DATE:	S-72
1			3			TOTAL SHEETS
2			4			707

STR. #3

DRAWN BY :	J.P. ADAMS	DATE :	9/12/12
CHECKED BY :	K.D. LAYNE	DATE :	5/2013
DESIGN ENGINEER OF RECORD:	G.W. DICKEY	DATE :	4/16/14

01-AUG-2014 09:36
R:\Structures\Plans\Str03\U2579B_SD_TS_03.dgn
lsutton