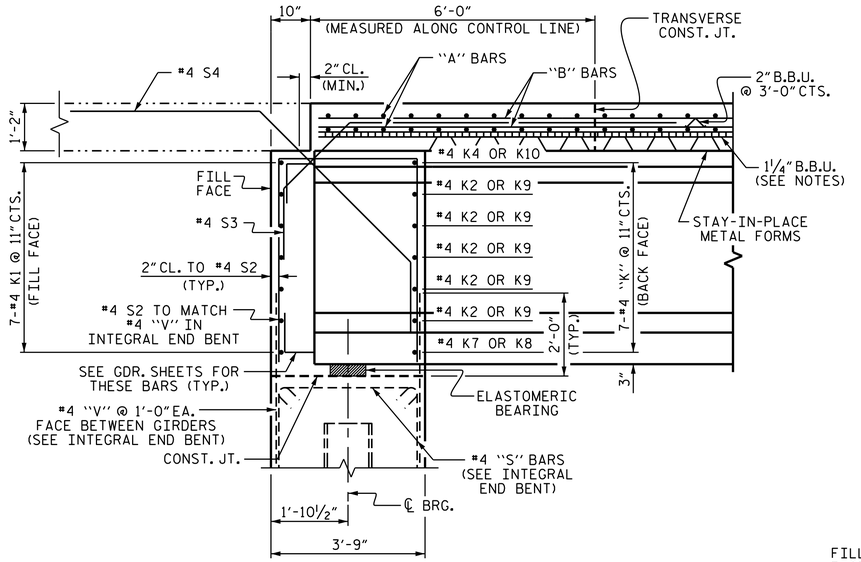

SECTION THRU INTEGRAL END BENT

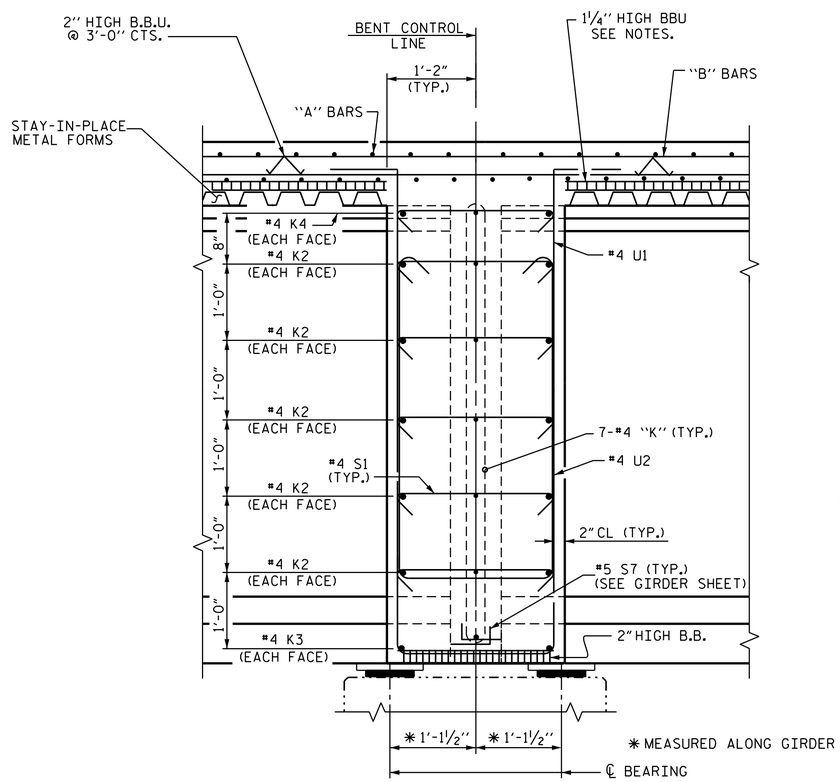

SECTION THRU BENT DIAPHRAGM

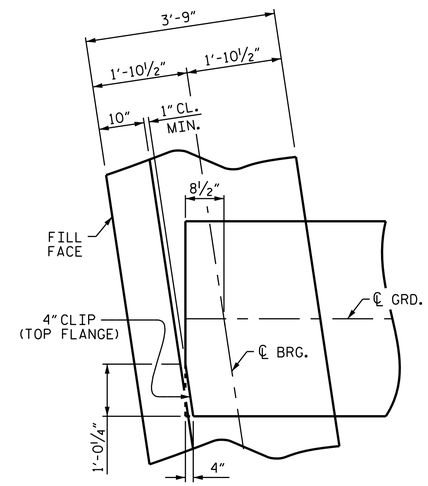

PLAN OF GIRDER @ INTEGRAL END BENT

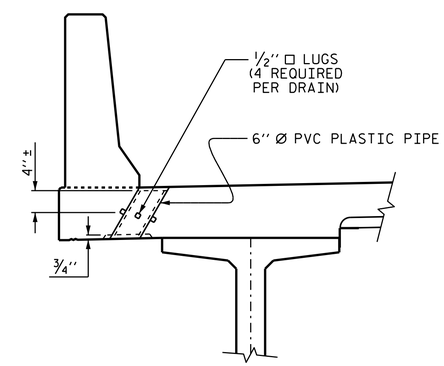

ELEVATION

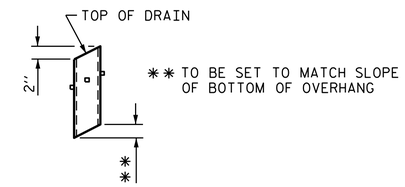

PIPE DETAIL

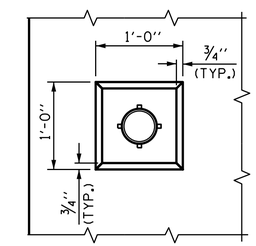

PLAN OF RECESS

DRAIN DETAILS

(24 PIPE DRAINS REQUIRED)

NOTES

6" Ø PIPE DRAINS ARE REQUIRED. SEE "PLAN OF SPAN" SHEETS FOR LOCATION.

TOP OF FLOOR DRAIN TO BE SET ⅜" BELOW SURFACE OF SLAB.

4 - ½" SQUARE LUGS TO BE GLUED TO THE PVC PLASTIC PIPE AT EQUAL SPACES AROUND THE PIPE DRAIN APPROXIMATELY 4" FROM THE TOP OF THE PIPE.

THE 6" Ø PVC PLASTIC PIPE AND FITTINGS SHALL BE SCHEDULE 40 AND CONFORM TO ASTM D1785.

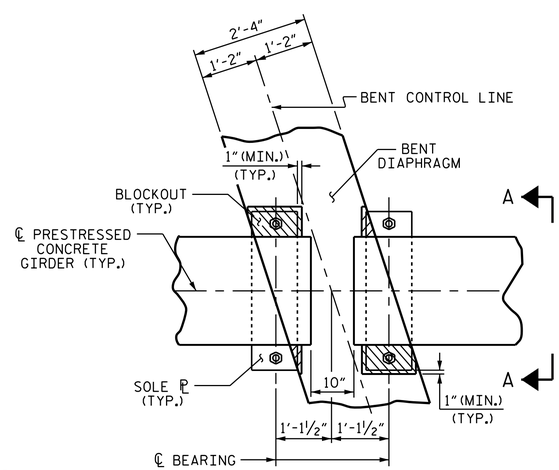

PLAN

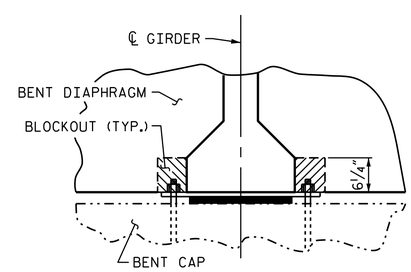

SECTION A-A

BENT DIAPHRAGM BLOCK-OUT DETAIL

PROJECT NO. U-2579B

FORSYTH COUNTY

STATION: 516+31.30 -L-

SHEET 3 OF 3

STATE OF NORTH CAROLINA
DEPARTMENT OF TRANSPORTATION
RALEIGH

SUPERSTRUCTURE

TYPICAL SECTION DETAILS

NORTH CAROLINA PROFESSIONAL SEAL 031480 ENGINEER DONALD R. SMITH, JR.

DocuSigned by: Donald R. Smith Jr. 43B435A14F38465... 7/30/2014

REVISIONS						SHEET NO.
NO.	BY:	DATE:	NO.	BY:	DATE:	S-42
1			3			TOTAL SHEETS
2			4			707

STR. #2

DRAWN BY :	M.K. BEARD	DATE : 5/8/13
CHECKED BY :	P.S. ADKINS	DATE : 2/4/14
DESIGN ENGINEER OF RECORD:	B.N. GRADY	DATE : 6/5/14

29-JUL-2014 14:59
R:\Structures\Plans\Str02\U2579B_SD_TS_02.dgn
lsutton