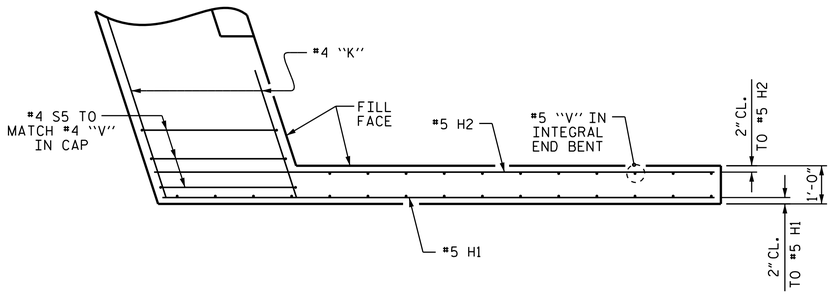

PLAN OF LEFT WING

@ END BENT 1

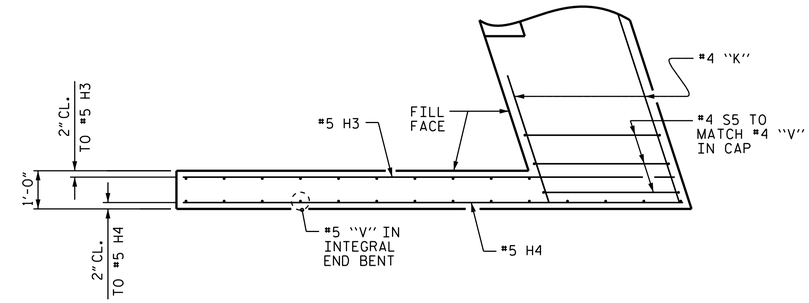

PLAN OF RIGHT WING

@ END BENT 1

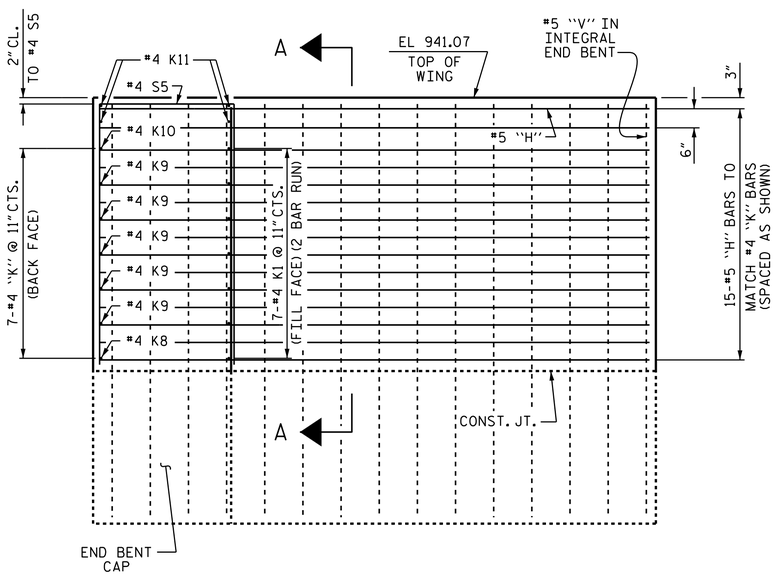

ELEVATION OF LEFT WING

@ END BENT 1

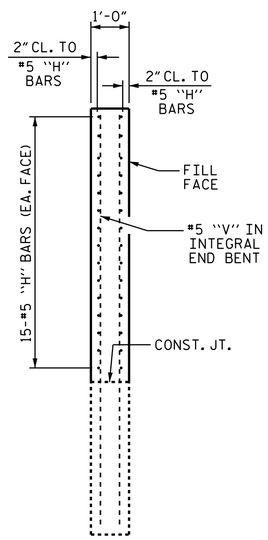

SECTION A-A

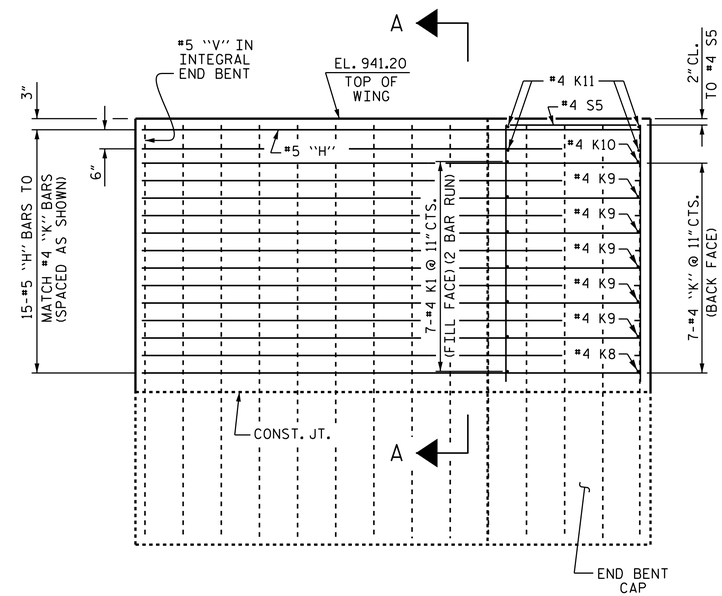

ELEVATION OF RIGHT WING

@ END BENT 1

PROJECT NO. U-2579B

FORSYTH COUNTY

STATION: 516+31.30 -L-

SHEET 3 OF 4

STATE OF NORTH CAROLINA
DEPARTMENT OF TRANSPORTATION
RALEIGH

SUPERSTRUCTURE

PLAN OF SPAN DETAILS

NORTH CAROLINA PROFESSIONAL SEAL 031480 ENGINEER DONALD R. SMITH, JR.

DocuSigned by: Donald R. Smith Jr. 43B435A14F38465... 7/30/2014

REVISIONS						SHEET NO.
NO.	BY:	DATE:	NO.	BY:	DATE:	S-45
1			3			TOTAL SHEETS
2			4			707

STR. #2

DRAWN BY :	M.K. BEARD	DATE :	8/30/13
CHECKED BY :	P.S. ADKINS	DATE :	2/4/14
DESIGN ENGINEER OF RECORD:	B.N. GRADY	DATE :	6/5/14

29-JUL-2014 14:59
R:\Structures\Plans\Str02\U2579B_SD_S*_02.dgn
lsutton