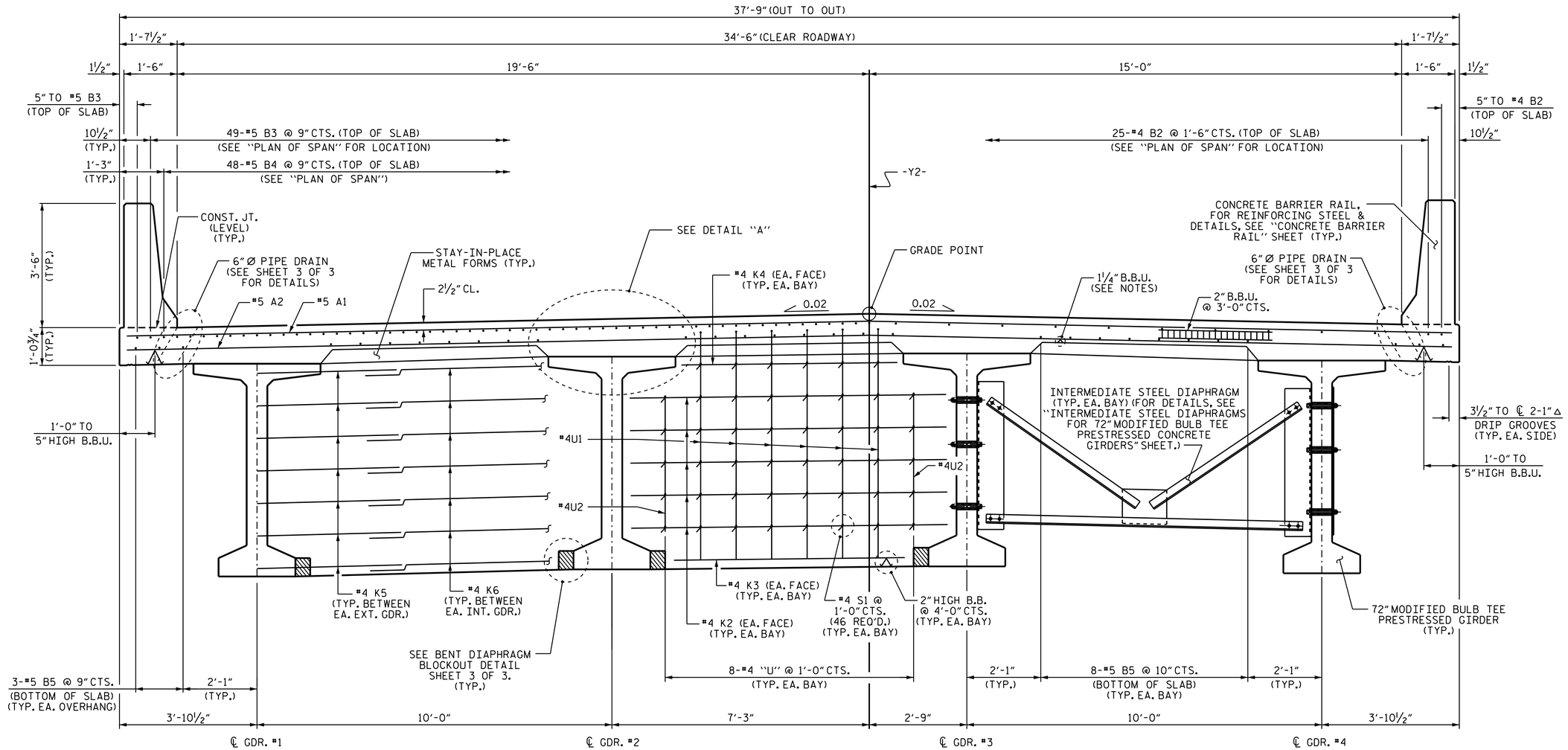

TYPICAL SECTION @ BENT DIAPHRAGM

TYPICAL SECTION @ INTERMEDIATE DIAPHRAGM

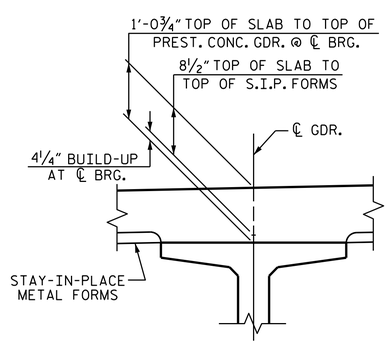

DETAIL "A"

NOTES

PROVIDE 1¼" HIGH BEAM BOLSTERS UPPER AT 4'-0" CTS. ATOP THE METAL STAY-IN-PLACE FORMS TO SUPPORT THE BOTTOM MAT OF 'A' BARS. WHEN USING REMOVABLE FORMS, PROVIDE CONTINUOUS HIGH CHAIRS FOR METAL DECK (C.H.C.M.) @ 4'-0" CTS. WITH A HEIGHT TO SUPPORT THE BOTTOM MAT OF 'A' BARS A CLEAR DISTANCE OF 2½" ABOVE THE TOP OF THE REMOVABLE FORM.

LONGITUDINAL STEEL MAY BE SHIFTED SLIGHTLY, AS NECESSARY, TO AVOID INTERFERENCE WITH STIRRUPS IN PRESTRESSED CONCRETE GIRDERS.

PREVIOUSLY CAST CONCRETE IN A CONTINUOUS UNIT SHALL HAVE ATTAINED A MINIMUM COMPRESSIVE STRENGTH OF 3,000 PSI BEFORE ADDITIONAL CONCRETE IS CAST IN THE UNIT.

BARRIER RAIL IN A CONTINUOUS UNIT SHALL NOT BE CAST UNTIL ALL SLAB CONCRETE IN THE UNIT HAS BEEN CAST AND HAS REACHED A MINIMUM COMPRESSIVE STRENGTH OF 3,000 PSI.

FOR WING ELEVATIONS AND DETAILS, SEE "PLAN OF SPAN DETAILS" SHEETS.

PROJECT NO. U-2579B
FORSYTH COUNTY
STATION: 516+31.30 -L-

SHEET 2 OF 3

STATE OF NORTH CAROLINA
DEPARTMENT OF TRANSPORTATION
RALEIGH

SUPERSTRUCTURE

TYPICAL SECTION

NORTH CAROLINA PROFESSIONAL SEAL 031480 ENGINEER DONALD R. SMITH JR.

DocuSigned by: Donald R. Smith Jr. 43B435A14F38465... 7/30/2014

REVISIONS						SHEET NO.
NO.	BY:	DATE:	NO.	BY:	DATE:	S-41
1			3			TOTAL SHEETS
2			4			707

STR. #2

DRAWN BY : M.K. BEARD DATE : 5/8/13
CHECKED BY : P.S. ADKINS DATE : 2/14/14
DESIGN ENGINEER OF RECORD: B.N. GRADY DATE : 6/5/14

29-JUL-2014 14:59
R:\Structures\Plans\Str02\U2579B_SD_TS_02.dgn
lsutton