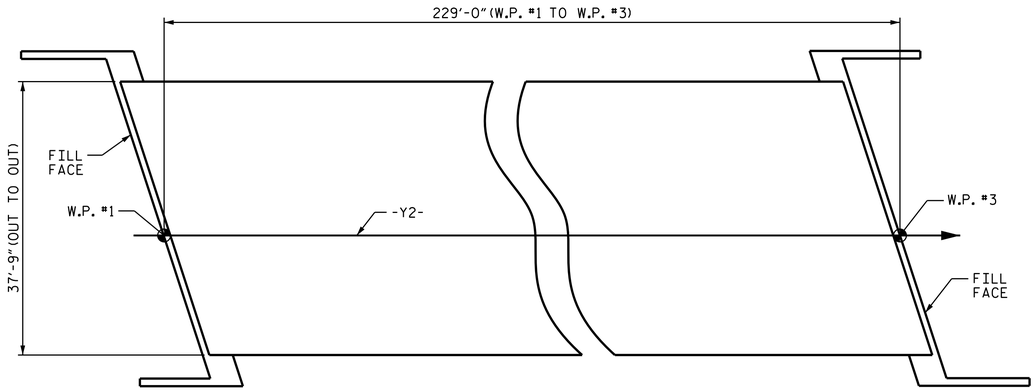

LAYOUT FOR COMPUTING AREA OF REINFORCED CONCRETE DECK SLAB
(SQ. FT. = 8,645)

SUPERSTRUCTURE REINFORCING STEEL LENGTHS ARE BASED ON THE FOLLOWING MINIMUM SPLICE LENGTHS					
BAR SIZE	SUPERSTRUCTURE EXCEPT APPROACH SLABS, PARAPET, AND BARRIER RAIL		APPROACH SLABS		PARAPET AND BARRIER RAIL
	EPOXY COATED	UNCOATED	EPOXY COATED	UNCOATED	
#4	2'-0"	1'-9"	2'-0"	1'-9"	2'-9"
#5	2'-6"	2'-2"	2'-6"	2'-2"	3'-5"
#6	3'-0"	2'-7"	3'-10"	2'-7"	4'-4"
#7	5'-3"	3'-6"			
#8	6'-10"	4'-7"			

BILL OF MATERIAL

BAR	NO.	SIZE	TYPE	LENGTH	WEIGHT
✱ A1	369	#5	STR	37'-5"	14400
A2	369	#5	STR	37'-5"	14400
✱ A101	4	#5	STR	33'-11"	142
✱ A102	4	#5	STR	30'-4"	127
✱ A103	4	#5	STR	26'-9"	112
✱ A104	4	#5	STR	23'-2"	97
✱ A105	4	#5	STR	19'-7"	82
✱ A106	4	#5	STR	16'-0"	67
✱ A107	4	#5	STR	12'-5"	52
✱ A108	4	#5	STR	8'-10"	37
✱ A109	4	#5	STR	5'-3"	22
✱ A110	4	#5	STR	1'-9"	7
A201	4	#5	STR	33'-11"	142
A202	4	#5	STR	30'-4"	127
A203	4	#5	STR	26'-9"	112
A204	4	#5	STR	23'-2"	97
A205	4	#5	STR	19'-7"	82
A206	4	#5	STR	16'-0"	67
A207	4	#5	STR	12'-5"	52
A208	4	#5	STR	8'-10"	37
A209	4	#5	STR	5'-3"	22
A210	4	#5	STR	1'-9"	7
✱ B1	198	#5	STR	22'-0"	4543
✱ B2	162	#4	STR	20'-0"	2164
✱ B3	153	#5	STR	28'-0"	4468
✱ B4	48	#5	STR	34'-6"	1727
B5	120	#5	STR	58'-5"	7311
H1	30	#5	STR	14'-5"	451
H2	15	#5	STR	14'-8"	229
H3	15	#5	STR	12'-10"	201
H4	15	#5	STR	13'-1"	205
H5	15	#5	STR	13'-10"	216
H6	30	#5	STR	14'-1"	441
K1	28	#4	STR	23'-9"	444
K2	60	#4	STR	9'-6"	381
K3	6	#4	STR	6'-7"	26
K4	12	#4	STR	6'-5"	51
K5	14	#4	1	6'-5"	60
K6	14	#4	2	12'-7"	118
K7	6	#4	STR	7'-10"	31
K8	4	#4	STR	5'-10"	16
K9	20	#4	STR	6'-6"	87
K10	4	#4	STR	5'-0"	13
K11	16	#4	STR	3'-9"	40
S1	138	#4	3	2'-9"	254
✱ S2	50	#4	4	14'-11"	498
✱ S3	50	#4	5	11'-11"	398
✱ S4	46	#4	5	11'-2"	343
✱ S5	12	#4	4	17'-1"	137
U1	18	#4	6	18'-0"	216
U2	6	#4	7	11'-0"	44
V1	24	#4	STR	5'-10"	94
REINFORCING STEEL				LBS.	26,074
✱ EPOXY COATED REINFORCING STEEL				LBS.	29,423

BAR TYPES

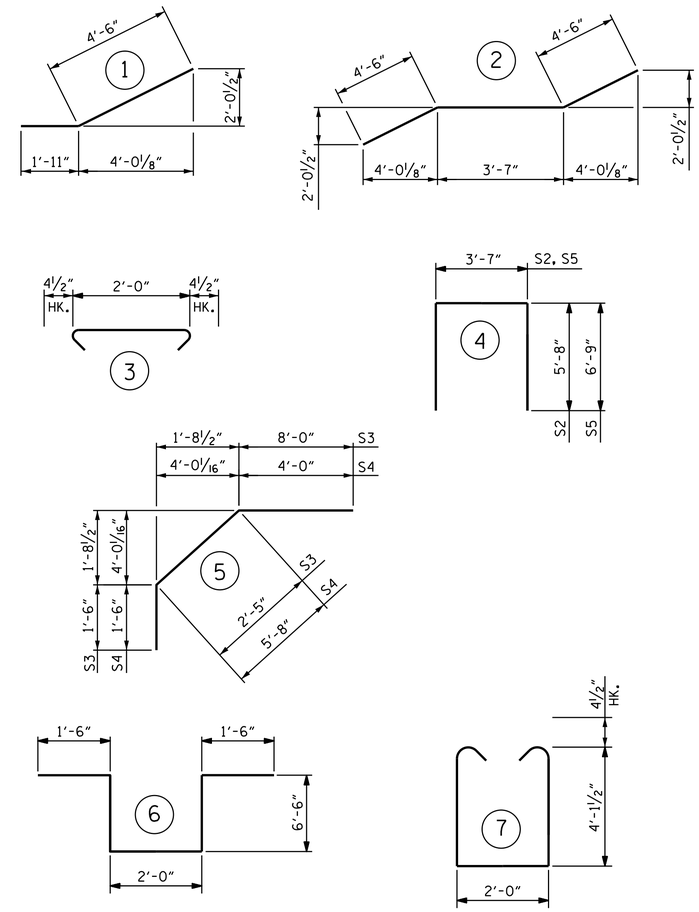

ALL BAR DIMENSIONS ARE OUT TO OUT

GROOVING BRIDGE FLOORS

APPROACH SLABS	1,519	SQ.FT.
BRIDGE DECK	7,146	SQ.FT.
TOTAL	8,665	SQ.FT.

PROJECT NO. U-2579B
FORSYTH COUNTY
STATION: 516+31.30 -L-

SUPERSTRUCTURE BILL OF MATERIAL

	CLASS AA CONCRETE	REINFORCING STEEL	EPOXY ✱COATED REINFORCING STEEL
	(CU.YDS.)	(LBS.)	(LBS.)
POUR #1	126.4		
POUR #2	167.5		
POUR #3	108.9		
TOTALS✱✱	402.8	26,074	29,423

✱✱QUANTITIES FOR BARRIER RAIL ARE NOT INCLUDED

NORTH CAROLINA PROFESSIONAL SEAL 031480 ENGINEER DONALD R. SMITH, JR.
DocuSigned by: Donald R. Smith Jr.
43B435A14F3B465...
7/30/2014

STATE OF NORTH CAROLINA
DEPARTMENT OF TRANSPORTATION
RALEIGH

SUPERSTRUCTURE
BILL OF MATERIAL

REVISIONS						SHEET NO.
NO.	BY:	DATE:	NO.	BY:	DATE:	S-55
1			3			TOTAL SHEETS
2			4			707

STR. #2 STD. NO. BOM1

ASSEMBLED BY : M.K. BEARD		DATE : 9/30/13	
CHECKED BY : P.S. ADKINS		DATE : 2/4/14	
DRAWN BY : JMB 5/87	REV. 8/16/99	RWW/LES	
CHECKED BY : SJD 9/87	REV. 5/1/06	TLA/GM	
	REV. 10/1/11	MAA/GM	

29-JUL-2014 14:59
R:\Structures\Plans\Str02\U2579B_SD_BM_02.dgn
lsutton