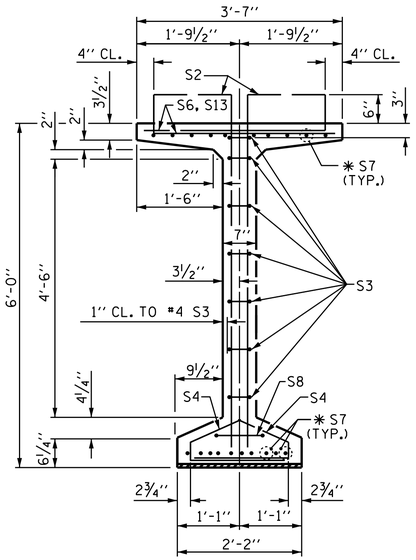

SECTION A-A

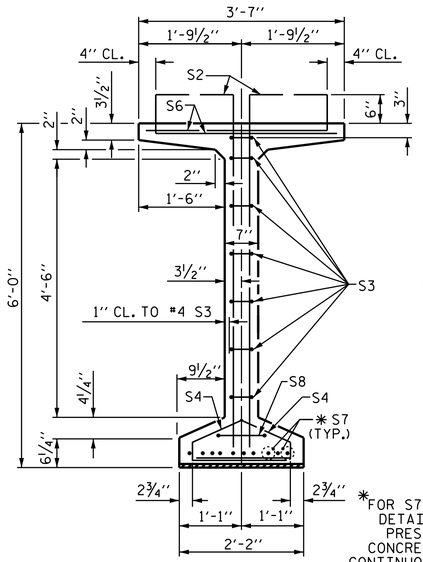

SECTION B-B

✱FOR S7 BARS, SEE DETAIL "C" OF PRESTRESSED CONCRETE GIRDER CONTINUOUS FOR LIVE LOAD DETAILS SHEET

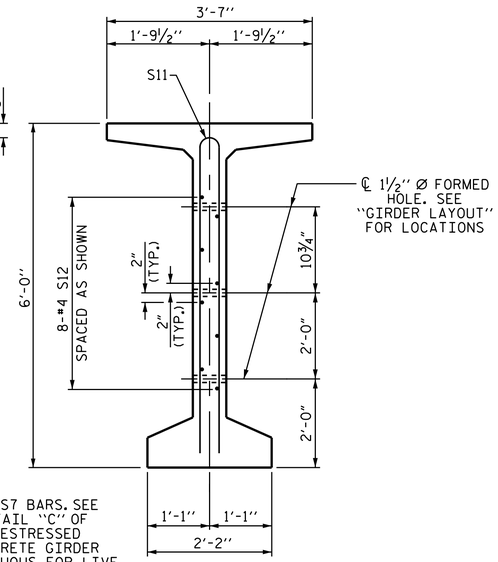

SECTION C-C

(S1, S6 AND S9 BARS NOT SHOWN)

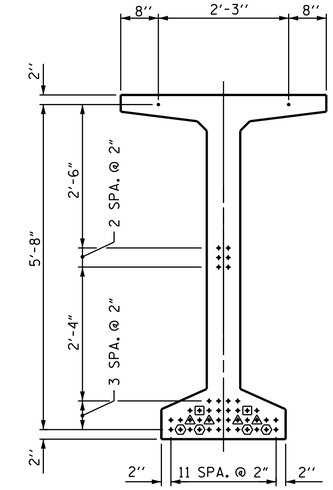

0.6" Ø LOW RELAXATION STRAND LAYOUT

DEBONDING LEGEND

- ● FULLY BONDED STRANDS
- STRANDS DEBONDED FOR 4'-0" FROM END OF GIRDER
- STRANDS DEBONDED FOR 6'-0" FROM END OF GIRDER
- STRANDS DEBONDED FOR 12'-0" FROM END OF GIRDER

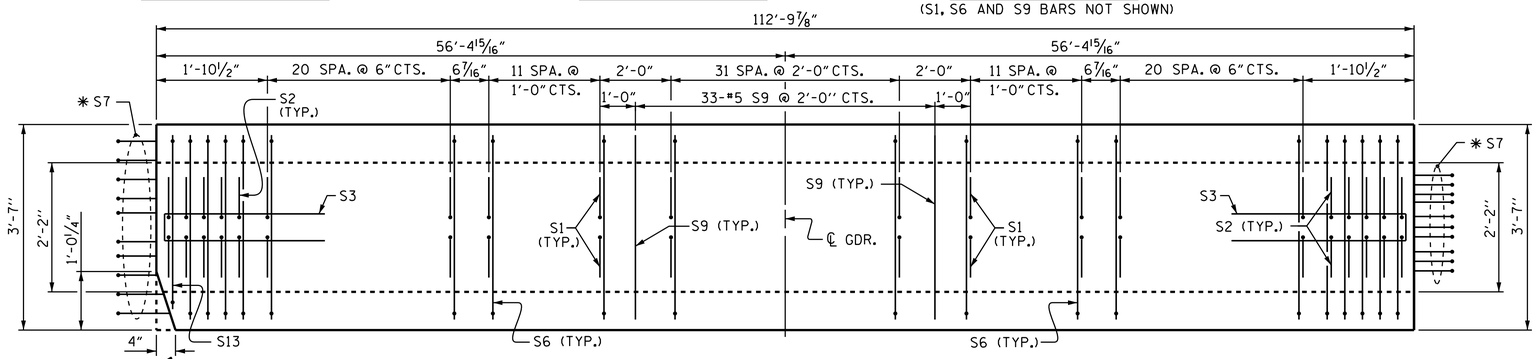

PLAN OF GIRDER

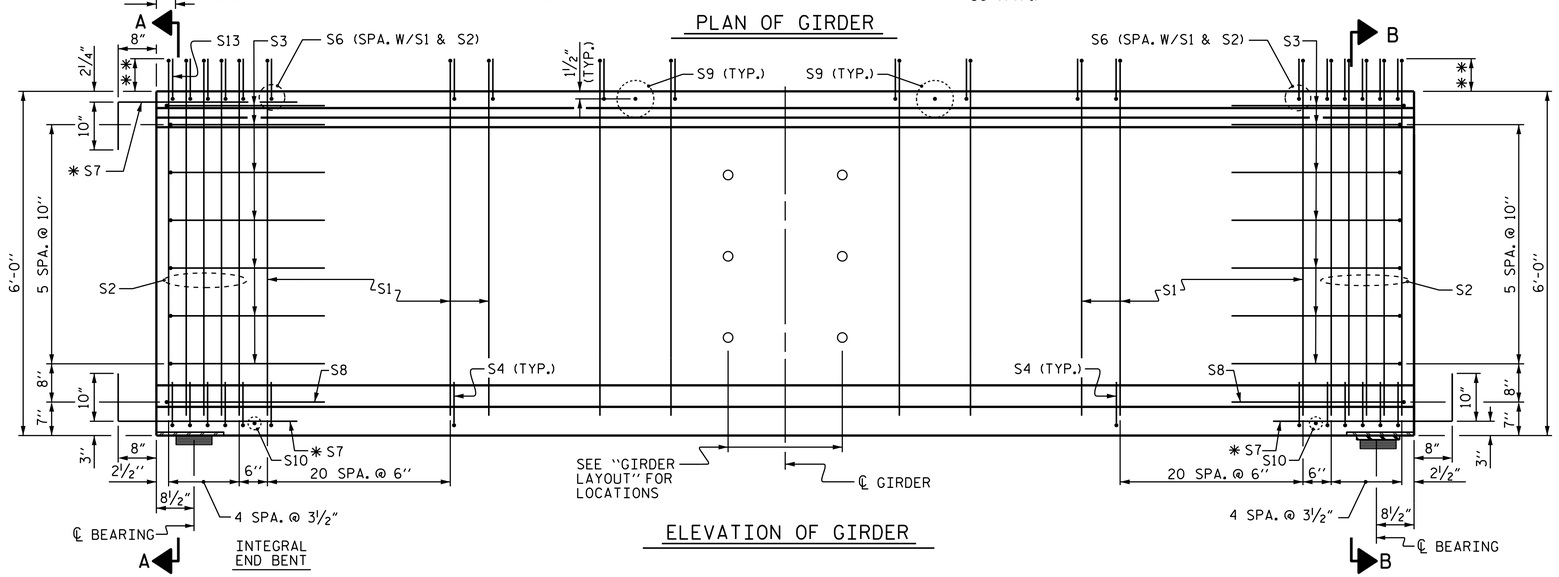

ELEVATION OF GIRDER

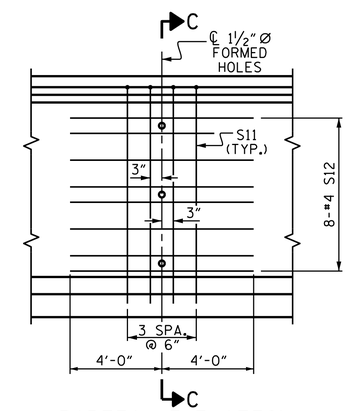

PARTIAL ELEVATION

SHOWING INTERMEDIATE STEEL DIAPHRAGM REINFORCING STEEL FOR GIRDERS

✱✱ S1 & S2 BARS SHALL HAVE AN EXTENSION ABOVE THE TOP OF THE GIRDER THAT VARIES FROM 7¾" AT THE GIRDER END TO 6" AT MIDSPAN.

0.6" Ø L. R. GRADE 270 STRANDS

AREA (SQUARE INCHES)	ULTIMATE STRENGTH (LBS. PER STRAND)	APPLIED PRESTRESS (LBS. PER STRAND)
0.217	58,600	43,950

REINFORCING STEEL FOR ONE GDR

BAR	NUMBER	SIZE	TYPE	LENGTH	WEIGHT
S1	196	#4	1	6'-11"	906
S2	20	#5	1	6'-11"	144
S3	14	#4	2	8'-5"	79
S4	104	#4	3	3'-0"	208
S6	214	#5	4	4'-4"	967
✱ S7	30	#5	STR	3'-8"	115
S8	2	#5	2	9'-0"	19
S9	33	#5	STR	3'-3"	112
S10	2	#3	STR	1'-10"	1
S11	8	#5	5	11'-6"	96
S12	16	#4	STR	8'-0"	86
S13	2	#5	4	3'-6"	7

✱ NOTE: S7 BARS SHALL BE BENT BEFORE SHIPMENT. HEAT BENDING SHALL NOT BE ALLOWED.

BAR TYPES

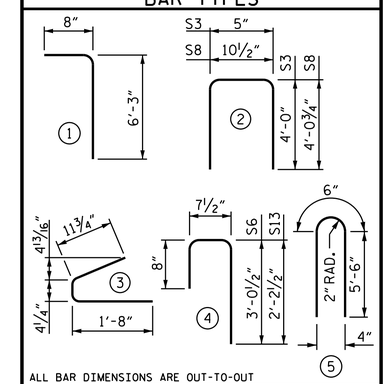

QUANTITIES FOR ONE GIRDER

	REINFORCING STEEL	9500 PSI CONCRETE	0.6" Ø L.R. STRANDS
	LB.	C.Y.	No.
	2,740	24.2	44

GIRDERS REQUIRED

NUMBER	LENGTH	TOTAL LENGTH
8	112'-9⅞"	902'-7"

PROJECT NO. U-2579B

FORSYTH COUNTY

STATION: 516+31.30 -L-

SHEET 1 OF 3

STATE OF NORTH CAROLINA
DEPARTMENT OF TRANSPORTATION
RALEIGH

STANDARD
72" PRESTRESSED CONCRETE MODIFIED BULB TEE CONTINUOUS FOR LIVE LOAD

NORTH CAROLINA PROFESSIONAL SEAL 031480 ENGINEER DONALD R. SMITH, JR.

DocuSigned by: Donald R. Smith Jr. 43B435A14F3B465... 7/30/2014

REVISIONS							SHEET NO.
NO.	BY:	DATE:	NO.	BY:	DATE:		S-48
1			3				TOTAL SHEETS
2			4				707

STR. #2

STD. NO. PCG8

ASSEMBLED BY : M.K. BEARD DATE : 4/25/13
CHECKED BY : P.S. ADKINS DATE : 2/4/14

DRAWN BY : EEM 2/6/97
CHECKED BY : VAP 2/6/97

REV. 5/1/06R TLA/GM
REV. 10/1/11 MAA/GM
REV. 6/13 MAA/GM

DESIGN ENGINEER OF RECORD:
B.N. GRADY DATE : 6/5/14

29-JUL-2014 14:59
R:\Structures\Plans\Str02\U2579B_SD_G*_02.dgn
lsutton