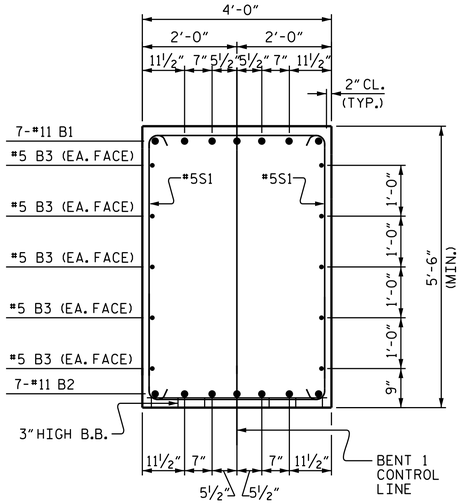

SECTION A-A

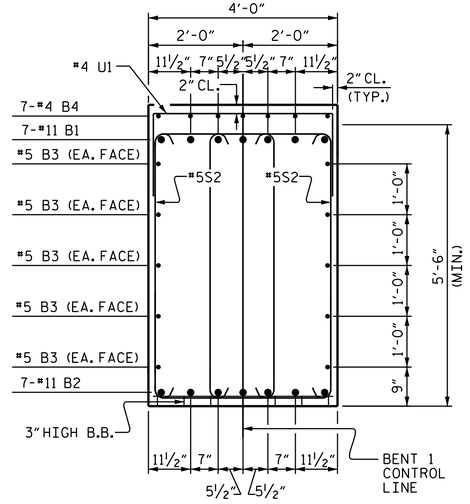

SECTION B-B

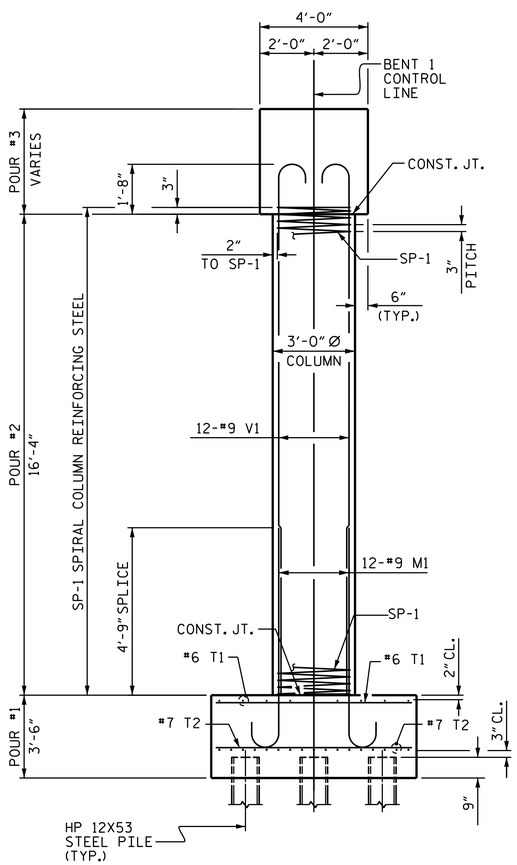

END ELEVATION

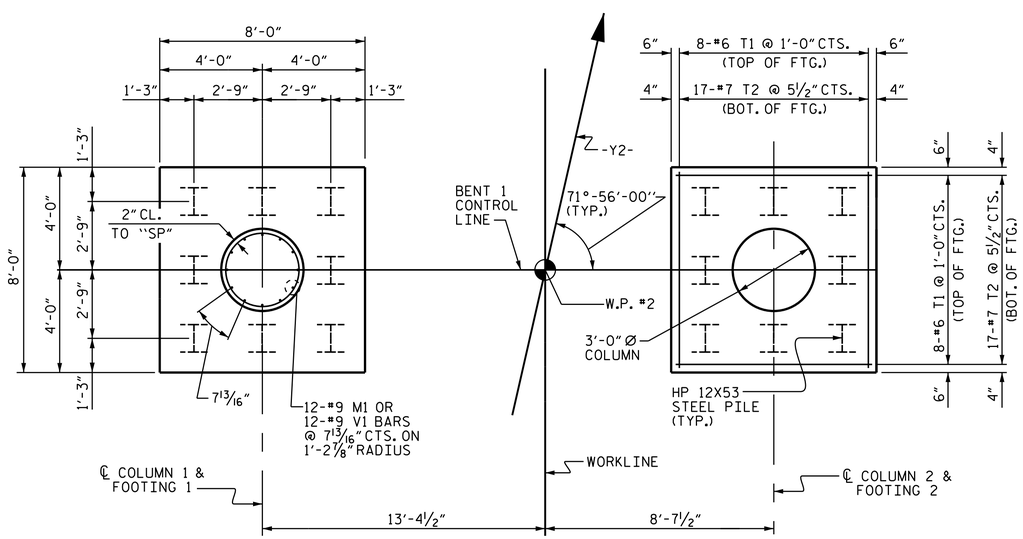

PLAN OF FOOTINGS & COLUMNS

DIMENSIONS AND REINFORCING STEEL ARE TYPICAL FOR EACH COLUMN & FOOTING.

BAR TYPES

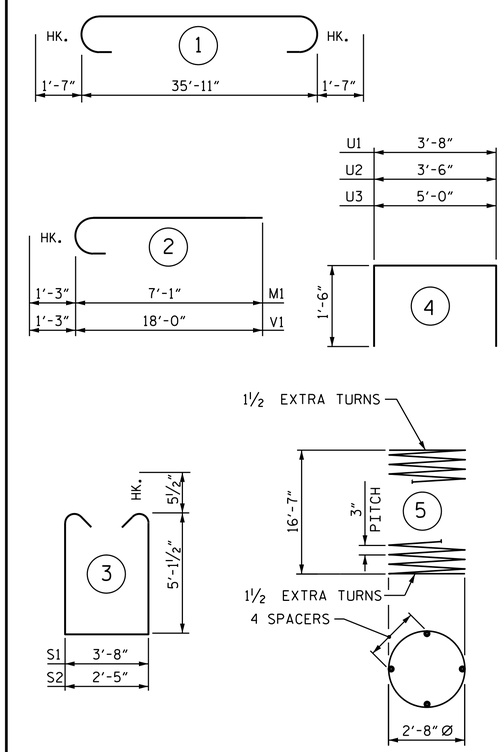

ALL BAR DIMENSIONS ARE OUT TO OUT.

BILL OF MATERIAL

BENT 1

BAR	NO.	SIZE	TYPE	LENGTH	WEIGHT
B1	7	#11	1	39'-1"	1454
B2	7	#11	STR	36'-1"	1342
B3	10	#5	STR	36'-1"	376
B4	7	#4	STR	3'-11"	18
M1	24	#9	2	8'-4"	680
S1	29	#5	3	14'-10"	449
S2	28	#5	3	13'-7"	397
T1	32	#6	STR	7'-6"	360
T2	68	#7	STR	7'-6"	1042
U1	32	#4	4	6'-8"	143
U2	10	#4	4	6'-6"	43
U3	6	#4	4	8'-0"	32
V1	24	#9	2	19'-3"	1571
REINFORCING STEEL				LBS.	7,907
SP-1	2	✱✱	5	573'-5"	766
SPIRAL COLUMN REINFORCING STEEL				LBS.	766

CLASS A CONCRETE BREAKDOWN

POUR #1 - FOOTINGS	C.Y.	16.6
POUR #2 - COLUMNS	C.Y.	8.6
POUR #3 - CAP	C.Y.	30.4
TOTAL	C.Y.	55.6

FOUNDATION EXCAVATION		LUMP SUM
HP 12x53 STEEL PILES NO. 16	LIN. FT.	480
STEEL PILE POINTS	EA.	16

✱✱ THE SP-1 SPIRAL REINFORCING STEEL SHALL BE W20 OR D-20 COLD DRAWN WIRE OR #4 PLAIN OR DEFORMED BAR.

PROJECT NO. U-2579B
FORSYTH COUNTY
STATION: 516+31.30 -L-

SHEET 2 OF 2

STATE OF NORTH CAROLINA
DEPARTMENT OF TRANSPORTATION
RALEIGH

SUBSTRUCTURE

BENT 1

NORTH CAROLINA PROFESSIONAL SEAL 031480 ENGINEER DONALD R. SMITH, JR.

DocuSigned by: Donald R. Smith Jr.
F53C49C65D02420...
7/30/2014

REVISIONS						SHEET NO.
NO.	BY:	DATE:	NO.	BY:	DATE:	S-59
1			3			TOTAL SHEETS
2			4			707

DRAWN BY : J.D. HAWK DATE : 11/14/13
CHECKED BY : M.K. BEARD DATE : 3/10/14
DESIGN ENGINEER OF RECORD: B.N. GRADY DATE : 6/5/14

30-JUL-2014 12:58
R:\Structures\Plans\Str02\U2579B_SD_B1_02.dgn
lsutton

STR. #2