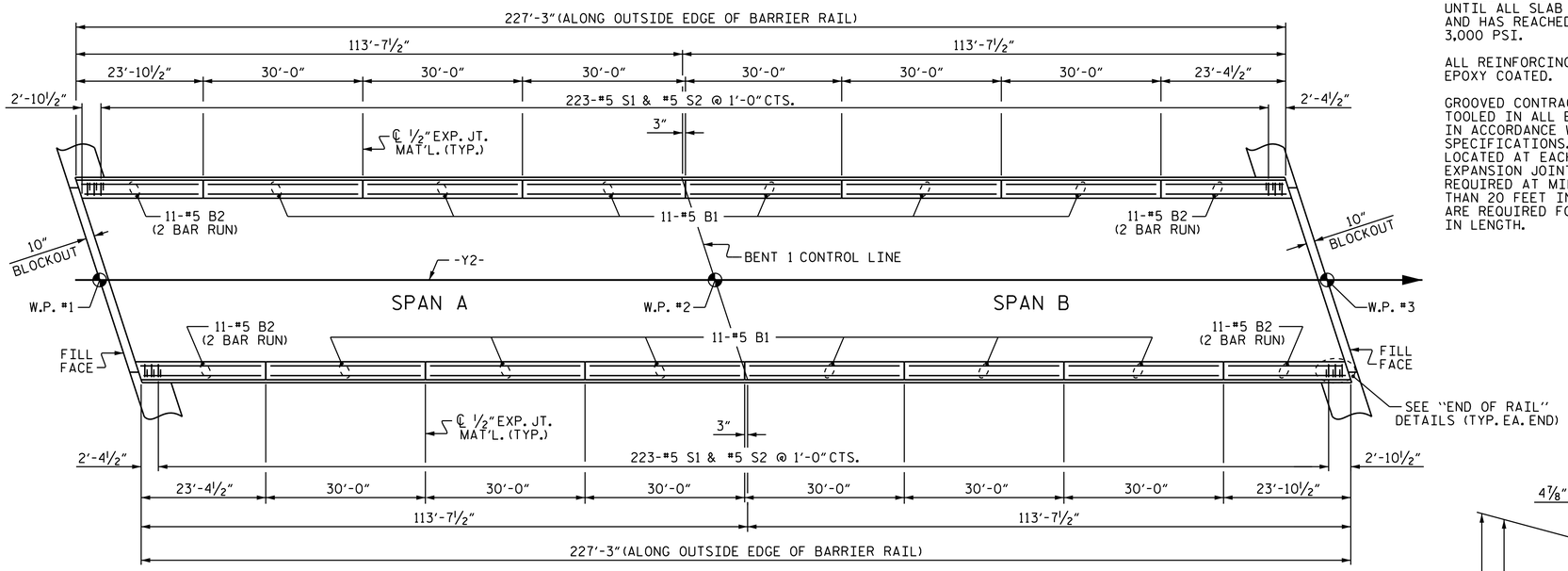

PLAN

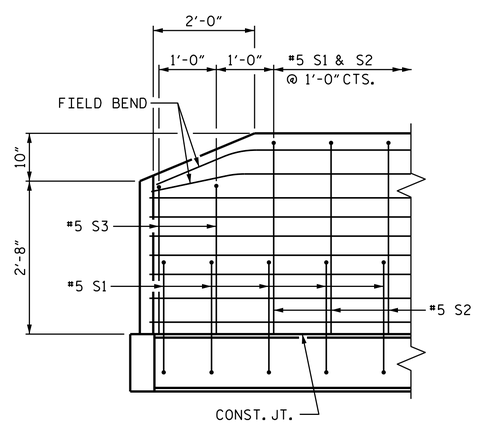

SIDE VIEW

END OF RAIL DETAILS

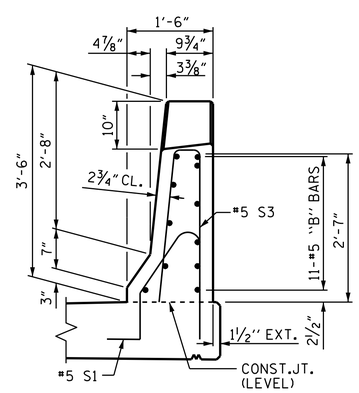

END VIEW

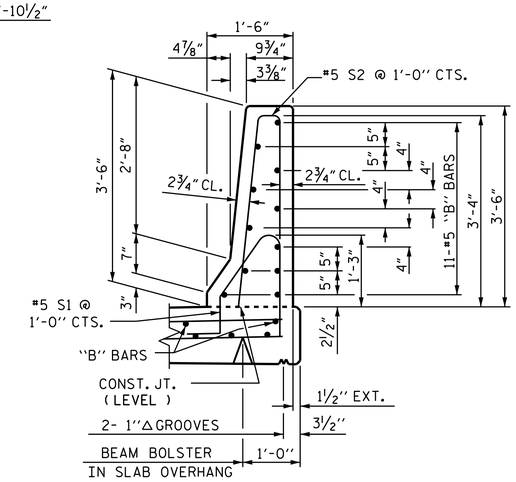

SECTION THRU RAIL

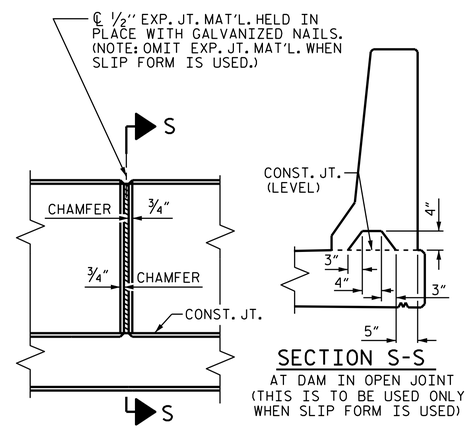

SECTION S-S

AT DAM IN OPEN JOINT (THIS IS TO BE USED ONLY WHEN SLIP FORM IS USED)

ELEVATION AT EXPANSION JOINTS

BARRIER RAIL DETAILS

NOTES

BARRIER RAIL IN A CONTINUOUS UNIT SHALL NOT BE CAST UNTIL ALL SLAB CONCRETE IN THE UNIT HAS BEEN CAST AND HAS REACHED A MINIMUM COMPRESSIVE STRENGTH OF 3,000 PSI.

ALL REINFORCING STEEL IN BARRIER RAILS SHALL BE EPOXY COATED.

GROOVED CONTRACTION JOINTS, ½" IN DEPTH, SHALL BE TOOLED IN ALL EXPOSED FACES OF THE BARRIER RAIL AND IN ACCORDANCE WITH ARTICLE 825-10(B) OF THE STANDARD SPECIFICATIONS. THE CONTRACTION JOINT SHALL BE LOCATED AT EACH THIRD POINT BETWEEN BARRIER RAIL EXPANSION JOINTS. ONLY ONE CONTRACTION JOINT IS REQUIRED AT MIDPOINT OF BARRIER RAIL SEGMENTS LESS THAN 20 FEET IN LENGTH AND NO CONTRACTION JOINTS ARE REQUIRED FOR THOSE SEGMENTS LESS THAN 10 FEET IN LENGTH.

BAR TYPES

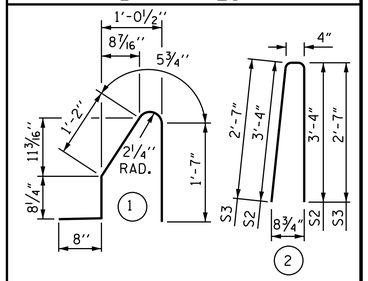

ALL BAR DIMENSIONS ARE OUT TO OUT.

BILL OF MATERIAL

FOR CONCRETE BARRIER RAIL ONLY

BAR	NO.	SIZE	TYPE	LENGTH	WEIGHT
* B1	132	#5	STR	29'-7"	4073
* B2	88	#5	STR	13'-6"	1239
* S1	454	#5	1	4'-7"	2170
* S2	446	#5	2	7'-0"	3256
* S3	8	#5	2	5'-6"	46

* EPOXY COATED REINFORCING STEEL	LBS.	10,784
CLASS AA CONCRETE	CU. YDS.	61.8
CONCRETE BARRIER RAIL	LIN. FT.	454.50

PROJECT NO. U-2579B

FORSYTH COUNTY

STATION: 516+31.30 -L-

STATE OF NORTH CAROLINA
DEPARTMENT OF TRANSPORTATION
RALEIGH

STANDARD

CONCRETE BARRIER RAIL

NORTH CAROLINA PROFESSIONAL SEAL 031480 ENGINEER DONALD R. SMITH, JR.

DocuSigned by: Donald R. Smith Jr.
43B435A14F38465...
7/30/2014

REVISIONS						SHEET NO.
NO.	BY:	DATE:	NO.	BY:	DATE:	S-52
1			3			TOTAL SHEETS
2			4			707

ASSEMBLED BY : M.K. BEARD		DATE : 5/1/13	
CHECKED BY : P.S. ADKINS		DATE : 2/4/14	
DRAWN BY : ARB 5/87	REV. 10/1/11	MAA/GM	
CHECKED BY : SJD 9/87	REV. 7/12	MAA/GM	
	REV. 6/13	MAA/GM	

29-JUL-2014 14:59
R:\Structures\Plans\Str02\U2579B_SD_BR_02.dgn
lsutton

STR. #2

STD. NO. CBR1