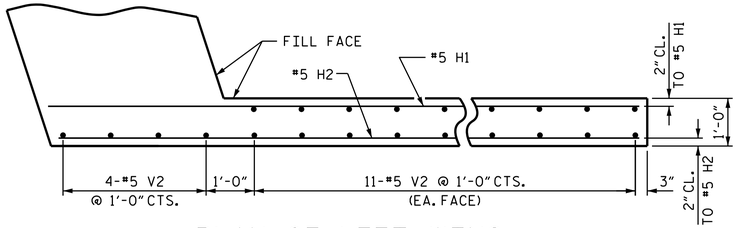

PLAN OF LEFT WING

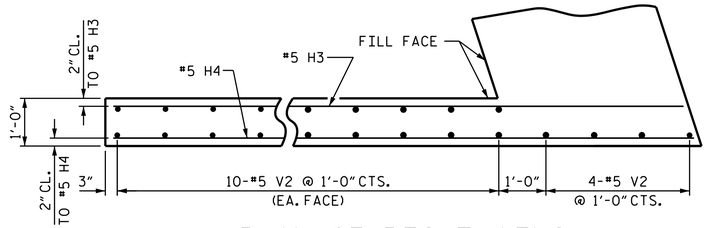

PLAN OF RIGHT WING

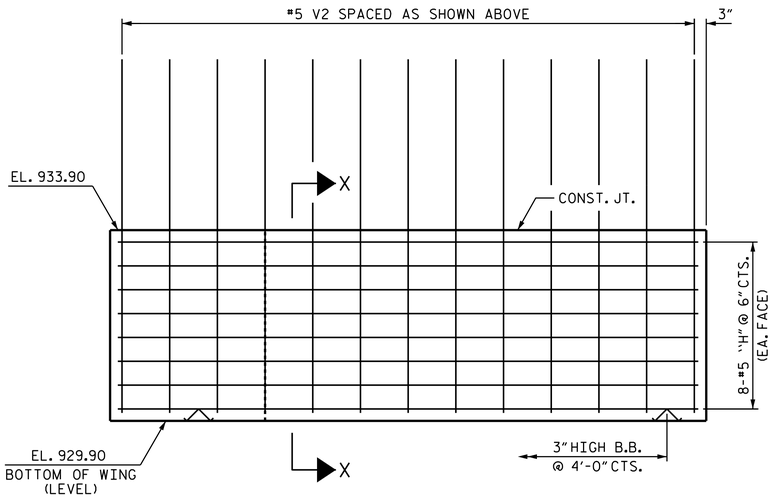

ELEVATION OF LEFT WING

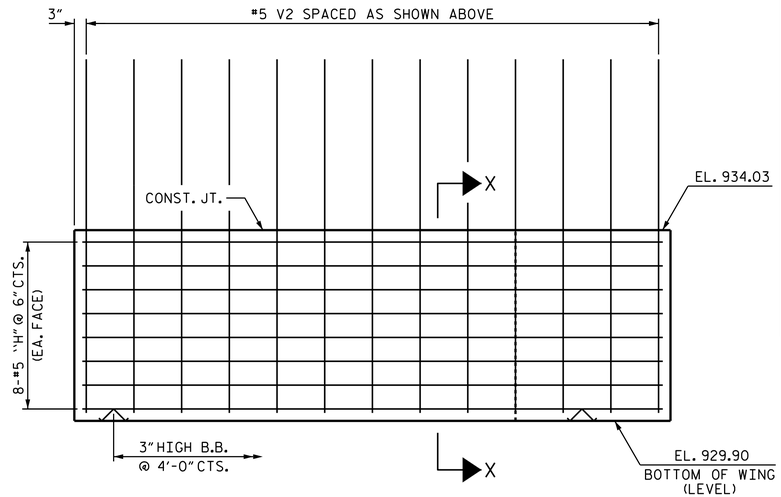

ELEVATION OF RIGHT WING

BAR TYPES

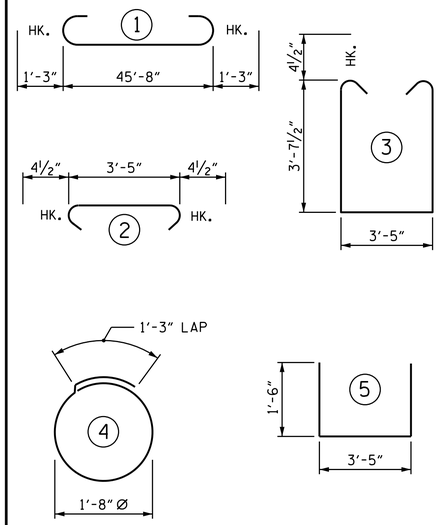

ALL BAR DIMENSIONS ARE OUT TO OUT.

BILL OF MATERIAL

END BENT 1

BAR	NO.	SIZE	TYPE	LENGTH	WEIGHT
B1	8	#9	1	48'-2"	1310
B2	6	#5	STR	45'-9"	286
B3	8	#4	STR	24'-2"	129
B4	4	#4	STR	2'-2"	6
B5	12	#4	STR	3'-5"	27
H1	8	#5	STR	14'-8"	122
H2	8	#5	STR	14'-5"	120
H3	8	#5	STR	12'-10"	107
H4	8	#5	STR	13'-1"	109
S1	58	#4	3	11'-5"	442
S2	58	#4	2	4'-2"	161
S3	32	#4	4	6'-6"	139
U1	3	#4	5	6'-5"	13
V1	74	#4	STR	6'-1"	301
V2	50	#5	STR	10'-10"	565

REINFORCING STEEL	LBS.	3,837
CLASS A CONCRETE	C.Y.	30.8
HP 12X53 STEEL PILES		
NO. 8	LIN. FT.	380
STEEL PILE POINTS	EA.	8

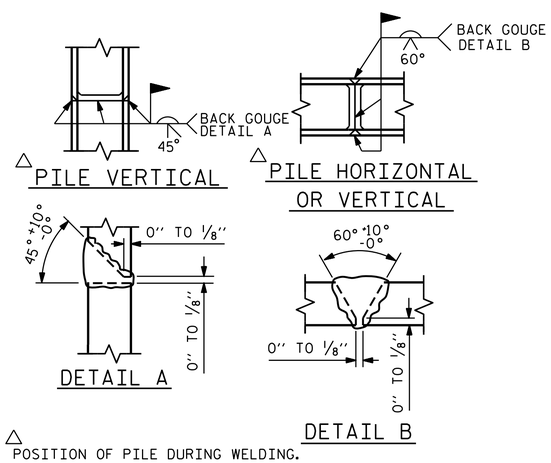

PILE SPLICE DETAILS

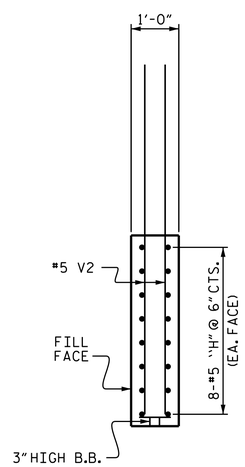

SECTION X-X

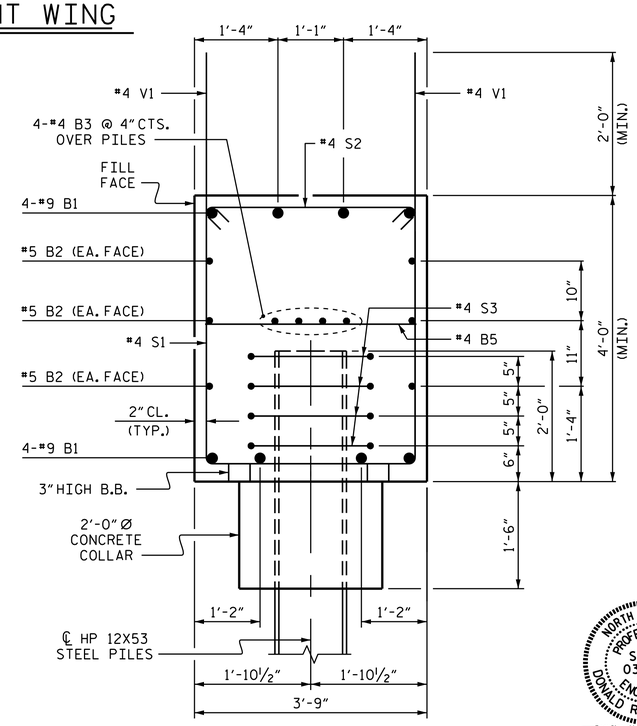

SECTION A-A

NORTH CAROLINA PROFESSIONAL SEAL 031480 ENGINEER DONALD R. SMITH JR.

DocuSigned by: Donald R. Smith Jr. 43B435A14F38465... 7/30/2014

PROJECT NO. U-2579B

FORSYTH COUNTY

STATION: 516+31.30 -L-

SHEET 2 OF 2

STATE OF NORTH CAROLINA
DEPARTMENT OF TRANSPORTATION
RALEIGH

SUBSTRUCTURE

INTEGRAL END BENT 1

REVISIONS						SHEET NO.
NO.	BY:	DATE:	NO.	BY:	DATE:	S-57
1			3			TOTAL SHEETS
2			4			707

STR. #2

DRAWN BY : J.D. HAWK DATE : 1/15/14
CHECKED BY : M.K. BEARD DATE : 3/13/14
DESIGN ENGINEER OF RECORD: B.N. GRADY DATE : 6/5/14

29-JUL-2014 14:59
R:\Structures\Plans\Str02\U2579B_SD_E*_02.dgn
lsutton