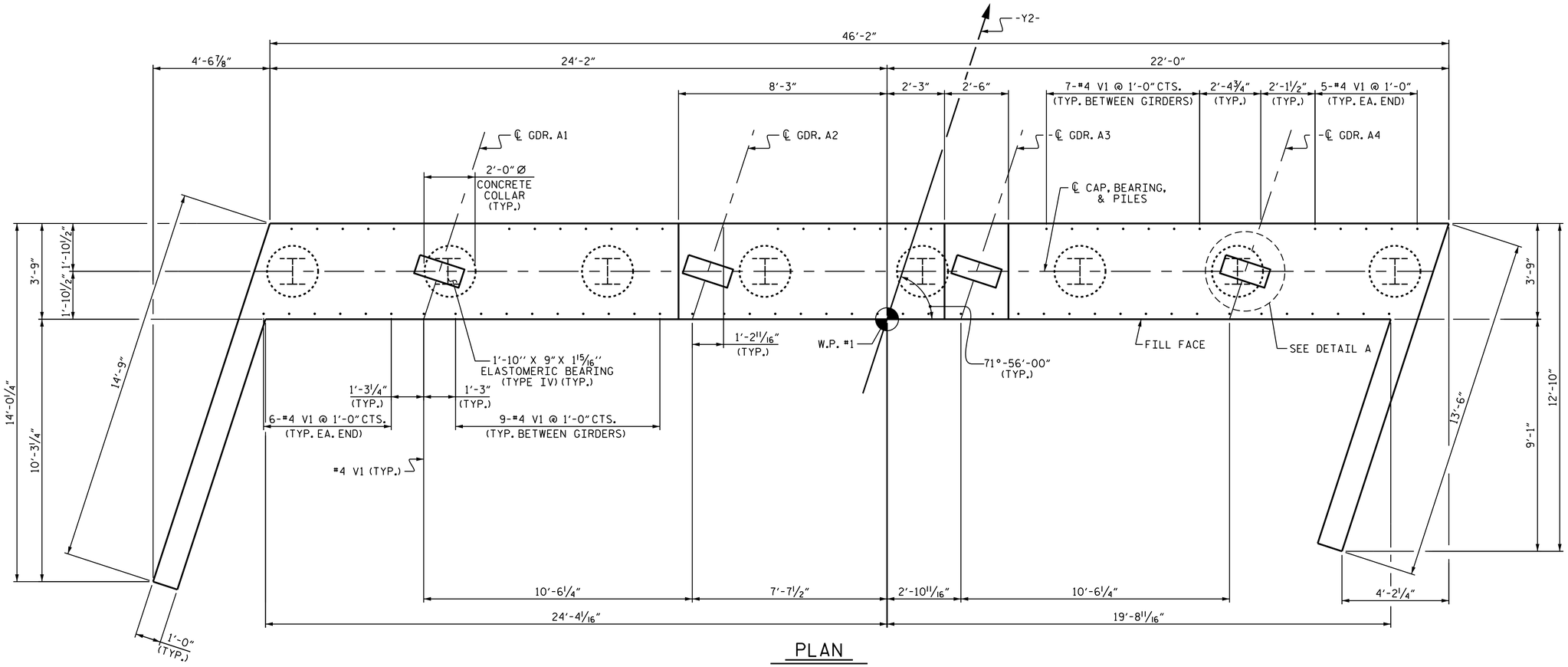

PLAN

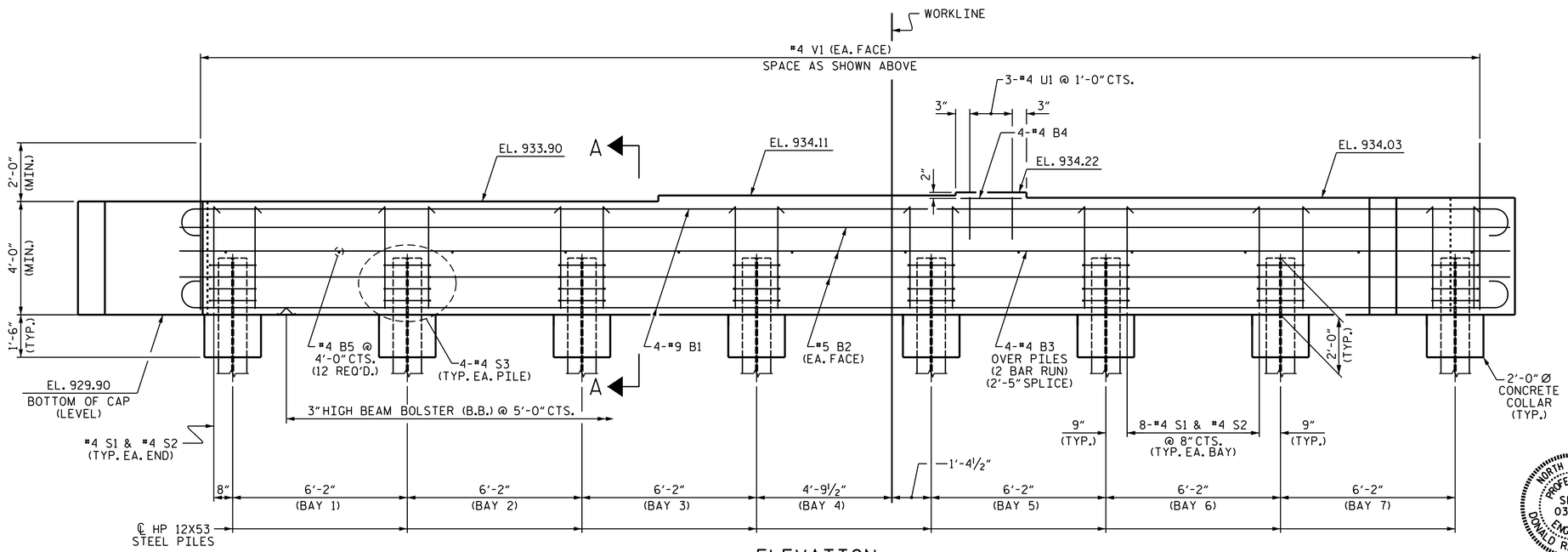

ELEVATION

NOTES

THE TOP SURFACE OF THE END BENT CAP AND WINGS, EXCEPT THE BEARING AREA, SHALL BE RAKED TO A DEPTH OF 1/4".

THE UPPER PORTION OF THE WINGS SHALL BE POURED WITH THE SUPERSTRUCTURE. CONCRETE AND REINFORCING STEEL QUANTITIES ARE INCLUDED IN THE SUPERSTRUCTURE BILL OF MATERIAL. FOR DETAILS, SEE SUPERSTRUCTURE PLANS.

INSTALL THE 4" DIA. DRAIN PIPE THROUGH THE WING WALL AS REQUIRED FOR REINFORCED BRIDGE APPROACH FILLS, SEE THE ROADWAY PLANS. REINFORCING STEEL IN THE WING WALL MAY BE SHIFTED AS NECESSARY TO CLEAR THE DRAIN PIPE.

FOR TEMPORARY DRAINAGE AT END BENT, SEE END BENT 2.

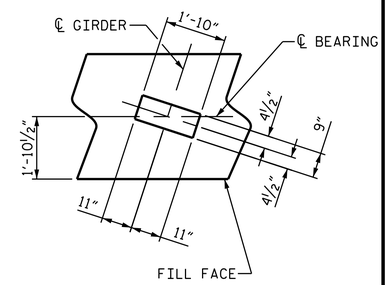

DETAIL A

(TYP. EA. BEARING)

PROJECT NO. U-2579B

FORSYTH COUNTY

STATION: 516+31.30 -L-

SHEET 1 OF 2

STATE OF NORTH CAROLINA
DEPARTMENT OF TRANSPORTATION
RALEIGH

SUBSTRUCTURE

INTEGRAL END BENT 1

NORTH CAROLINA PROFESSIONAL SEAL 031480 ENGINEER DONALD R. SMITH, JR.

DocuSigned by: Donald R. Smith Jr. 43B435A14F38465... 7/30/2014

REVISIONS							SHEET NO.
NO.	BY:	DATE:	NO.	BY:	DATE:		S-56
1			3				TOTAL SHEETS
2			4				707

STR. #2

DRAWN BY :	J.D.HAWK	DATE :	1/15/14
CHECKED BY :	M.K. BEARD	DATE :	3/13/14
DESIGN ENGINEER OF RECORD:	B.N. GRADY	DATE :	6/5/14

29-JUL-2014 14:59
R:\Structures\Plans\Str02\U2579B_SD_E*_02.dgn
lsutton