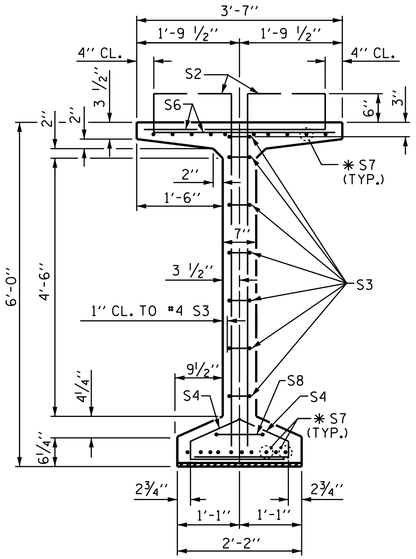

SECTION A-A

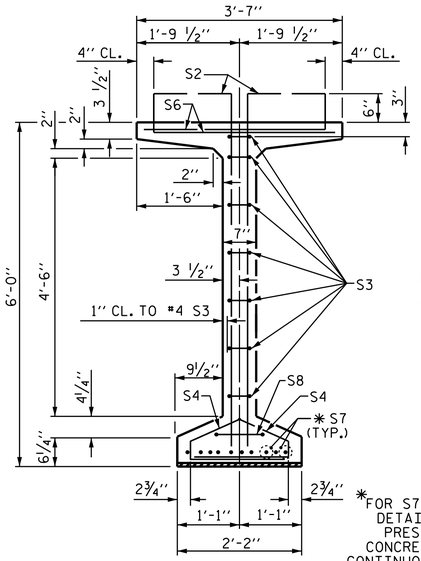

SECTION B-B

✱FOR S7 BARS, SEE DETAIL "C" OF PRESTRESSED CONCRETE GIRDER CONTINUOUS FOR LIVE LOAD DETAILS SHEET

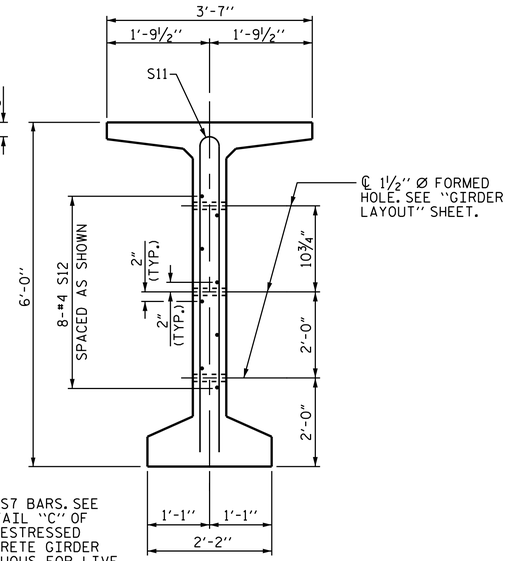

SECTION C-C

(S1, S6 AND S9 BARS NOT SHOWN)

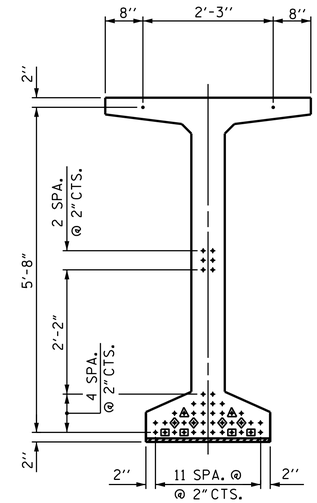

0.6" Ø LOW RELAXATION STRAND LAYOUT

DEBONDING LEGEND

- ● FULLY BONDED STRANDS
- ▣ STRANDS DEBONDED FOR 4'-0" FROM END OF GIRDER
- △ STRANDS DEBONDED FOR 12'-0" FROM END OF GIRDER
- ◇ STRANDS DEBONDED FOR 6'-0" FROM END OF GIRDER

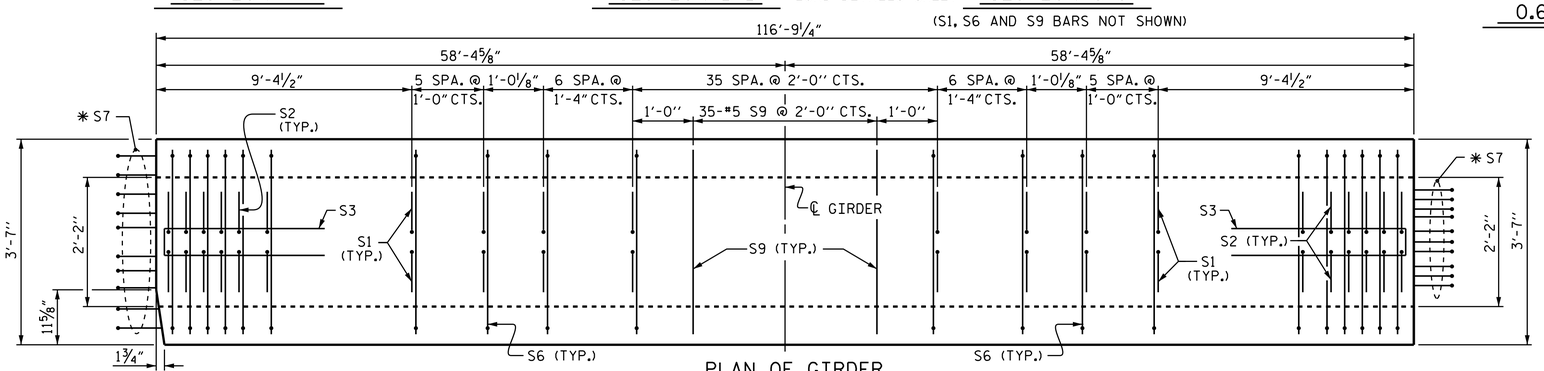

PLAN OF GIRDER

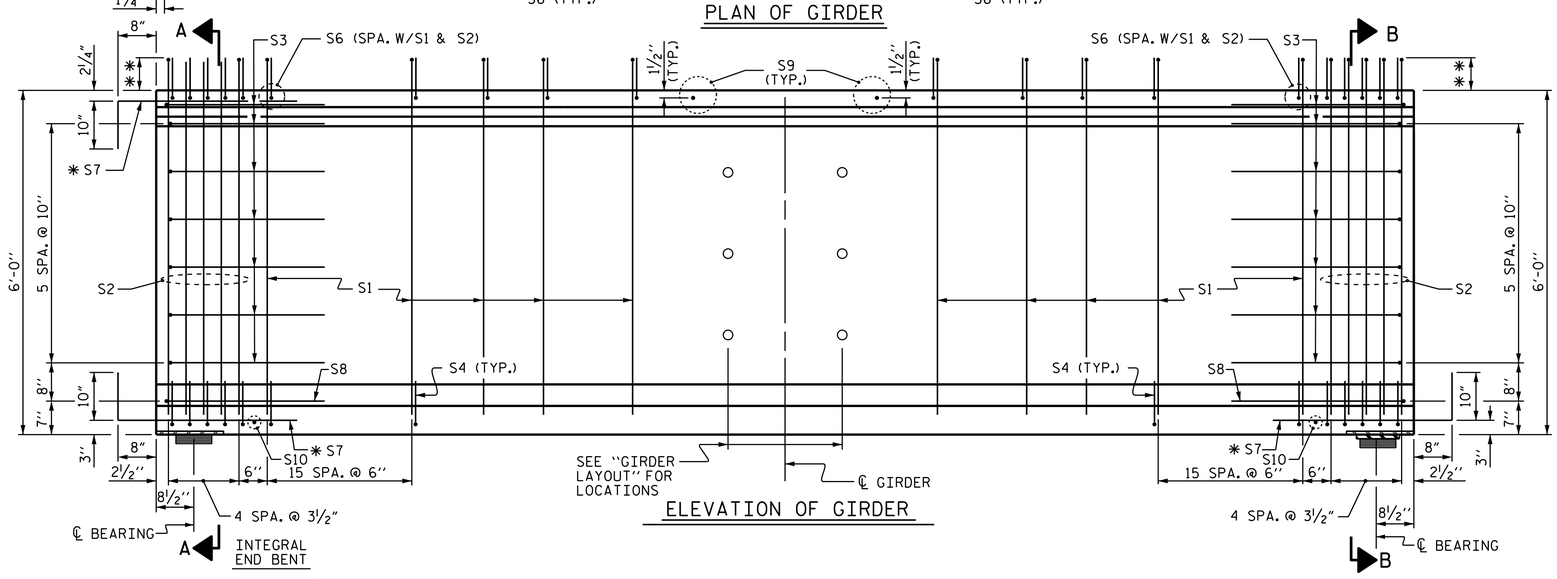

ELEVATION OF GIRDER

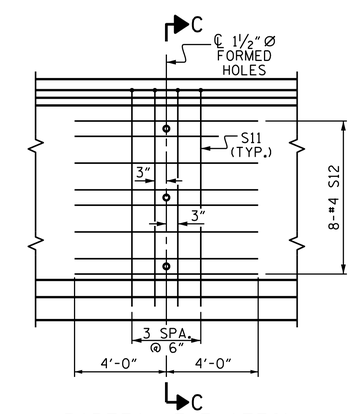

PARTIAL ELEVATION

SHOWING INTERMEDIATE STEEL DIAPHRAGM REINFORCING STEEL

✱✱ S1 & S2 BARS SHALL HAVE AN EXTENSION ABOVE THE TOP OF THE GIRDER THAT VARIES FROM 8 1/2" AT THE GIRDER END TO 6" AT MIDSPAN.

0.6" Ø L. R. GRADE 270 STRANDS		
AREA (SQUARE INCHES)	ULTIMATE STRENGTH (LBS. PER STRAND)	APPLIED PRESTRESS (LBS. PER STRAND)
0.217	58,600	43,950

REINFORCING STEEL FOR ONE GDR

BAR	NUMBER	SIZE	TYPE	LENGTH	WEIGHT
S1	180	#4	1	7'-0"	842
S2	20	#5	1	7'-0"	146
S3	14	#4	2	8'-5"	79
S4	84	#4	3	3'-0"	168
S6	200	#5	4	4'-4"	904
✱ S7	30	#5	STR	3'-8"	115
S8	2	#5	2	9'-0"	19
S9	35	#5	STR	3'-3"	119
S10	2	#3	STR	1'-10"	1
S11	8	#5	5	11'-6"	96
S12	16	#4	STR	8'-0"	86

✱ NOTE: S7 BARS SHALL BE BENT BEFORE SHIPMENT. HEAT BENDING SHALL NOT BE ALLOWED.

BAR TYPES

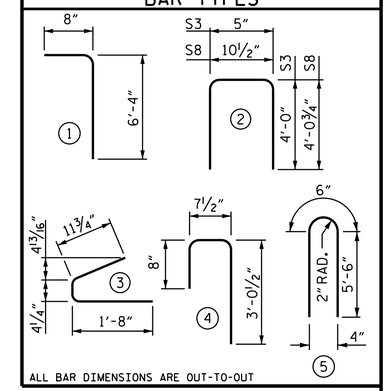

QUANTITIES FOR ONE GIRDER

	REINFORCING STEEL	10,000 PSI CONCRETE	0.6" Ø L.R. STRANDS
	LB.	C.Y.	No.
SPAN A	2,575	25.0	46

GIRDERS REQUIRED

NUMBER	LENGTH	TOTAL LENGTH
12	116'-9 1/4"	1401.25

PROJECT NO. U-2579B

FORSYTH COUNTY

STATION: 482+13.14 -L-

SHEET 1 OF 3

STATE OF NORTH CAROLINA
DEPARTMENT OF TRANSPORTATION
RALEIGH

STANDARD
72" PRESTRESSED CONCRETE
MODIFIED BULB TEE
CONTINUOUS FOR LIVE LOAD

SPAN A

NORTH CAROLINA PROFESSIONAL SEAL 031480 ENGINEER DONALD R. SMITH, JR.

DocuSigned by: Donald R. Smith Jr. 43B435A14F38465... 7/30/2014

REVISIONS						SHEET NO.
NO.	BY:	DATE:	NO.	BY:	DATE:	S-14
1			3			TOTAL SHEETS
2			4			707

STR. #1

STD. NO. PCG8

ASSEMBLED BY : M.K. BEARD	DATE : 12/12/13	
CHECKED BY : P.S. ADKINS	DATE : 3/10/14	
DRAWN BY : EEM 2/6/97	REV. 5/1/06R	TLA/GM
CHECKED BY : VAP 2/6/97	REV. 10/1/11	MAA/GM
	REV. 6/13	MAA/GM

DESIGN ENGINEER OF RECORD: H.T. DIEU DATE : 6/9/14

29-JUL-2014 14:35
R:\Structures\Plans\Str01\U2579B_SD_G*_01.dgn
lsutton