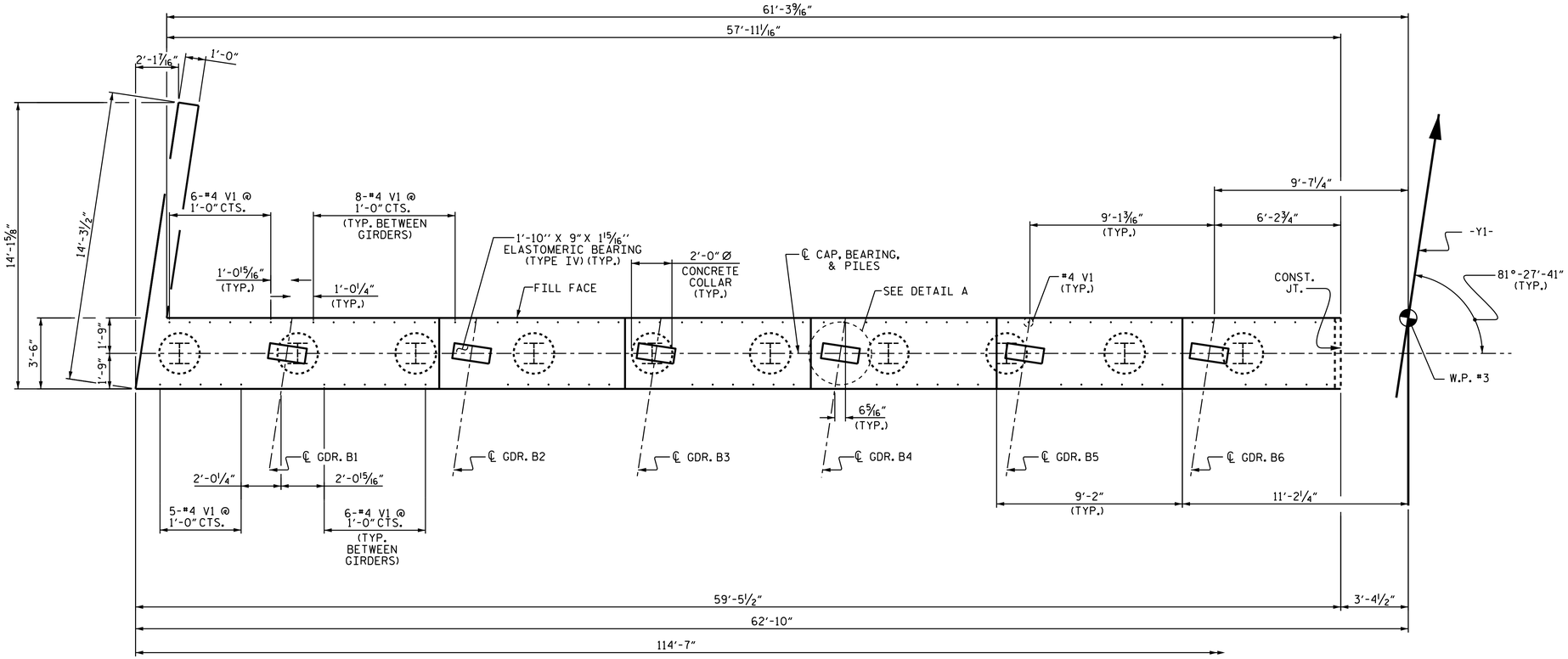

PLAN

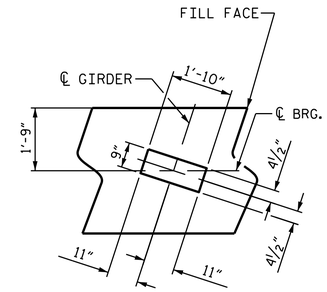

DETAIL A

(TYP. EA. BEARING)

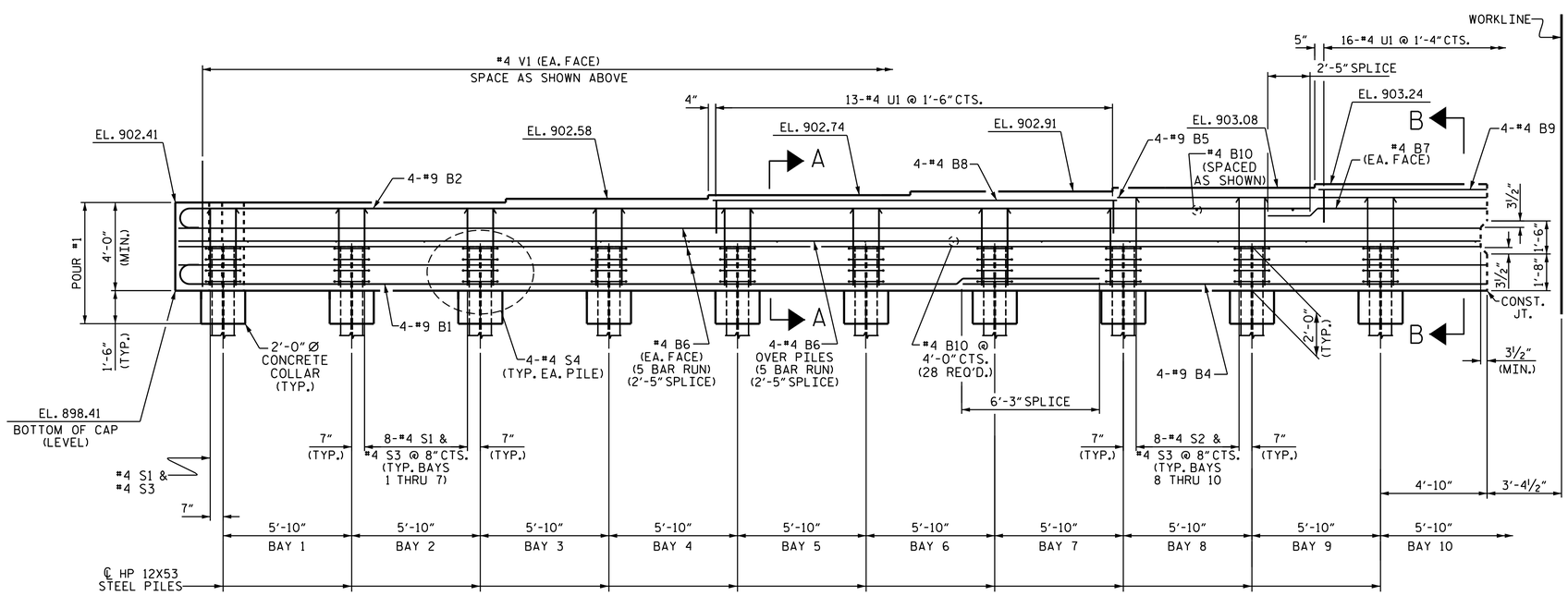

ELEVATION

PROJECT NO. U-2579B

FORSYTH COUNTY

STATION: 482+13.14 -L-

SHEET 1 OF 3

STATE OF NORTH CAROLINA
DEPARTMENT OF TRANSPORTATION
RALEIGH

SUBSTRUCTURE

INTEGRAL END BENT 2

NORTH CAROLINA PROFESSIONAL SEAL 031480 ENGINEER DONALD R. SMITH, JR.

DocuSigned by: Donald R. Smith Jr.
43B435A14F3B465...
7/30/2014

REVISIONS						SHEET NO.
NO.	BY:	DATE:	NO.	BY:	DATE:	S-30
1			3			TOTAL SHEETS
2			4			707

STR. #1

DRAWN BY :	J.D.HAWK	DATE :	1/15/14
CHECKED BY :	P.S. ADKINS	DATE :	4/8/14
DESIGN ENGINEER OF RECORD:	H.T. DIEU	DATE :	6/9/14

29-JUL-2014 14:36
R:\Structures\Plans\Str01\U2579B_SD_E*_01.dgn
lsutton