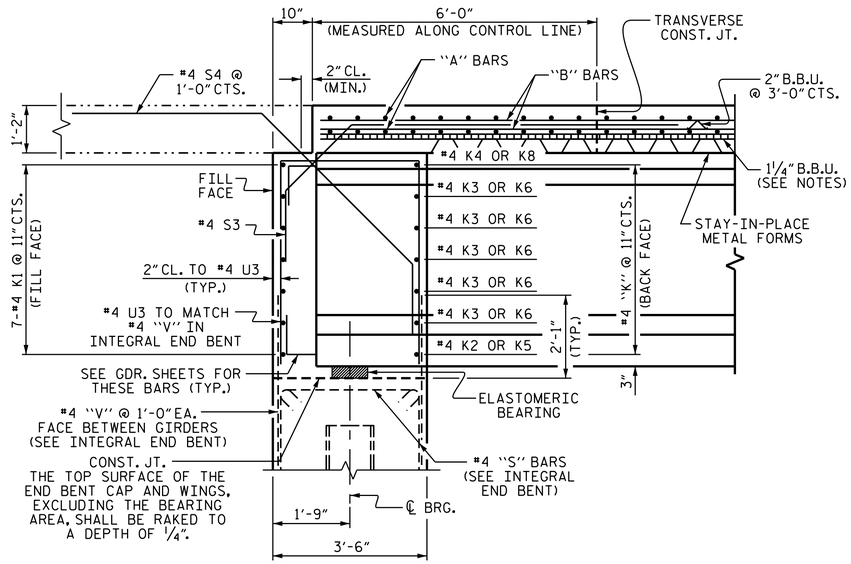

SECTION THRU INTEGRAL END BENT

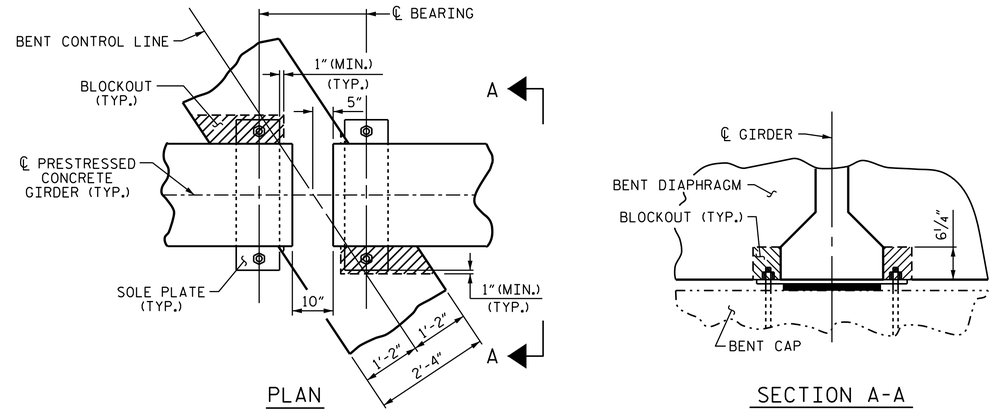

BENT DIAPHRAGM BLOCK-OUT DETAIL

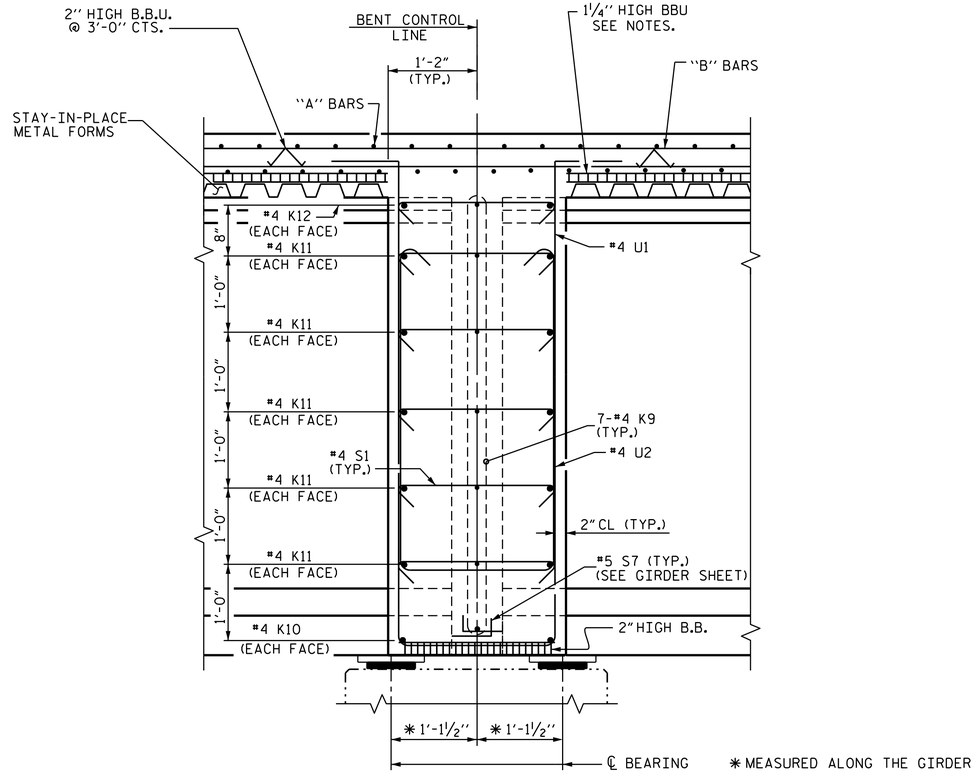

SECTION THRU BENT DIAPHRAGM

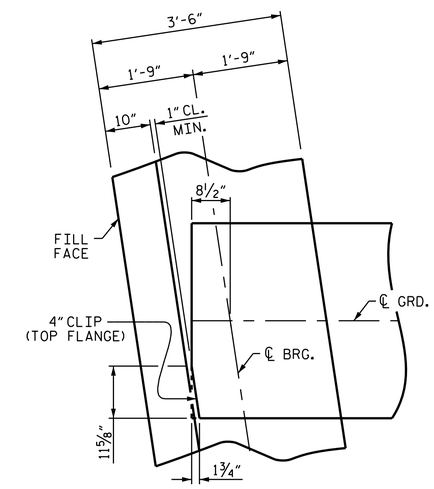

PLAN OF GIRDER @ INTEGRAL END BENT

PROJECT NO. U-2579B
FORSYTH COUNTY
STATION: 482+13.14 -L-

SHEET 3 OF 3

STATE OF NORTH CAROLINA
DEPARTMENT OF TRANSPORTATION
RALEIGH

SUPERSTRUCTURE

TYPICAL SECTION DETAILS

NORTH CAROLINA PROFESSIONAL SEAL 031480 ENGINEER DONALD R. SMITH, JR.

DocuSigned by: Donald R. Smith Jr.
43B435A14F3B465...
7/30/2014

REVISIONS						SHEET NO.
NO.	BY:	DATE:	NO.	BY:	DATE:	S-7
1			3			TOTAL SHEETS
2			4			707

STR. #1

DRAWN BY :	M.K. BEARD	DATE :	11/18/13
CHECKED BY :	P.S. ADKINS	DATE :	3/10/14
DESIGN ENGINEER OF RECORD:	H.T. DIEU	DATE :	6/9/14

29-JUL-2014 14:35
R:\Structures\Plans\Str01\U2579B_SD_TS_01.dgn
lsutton