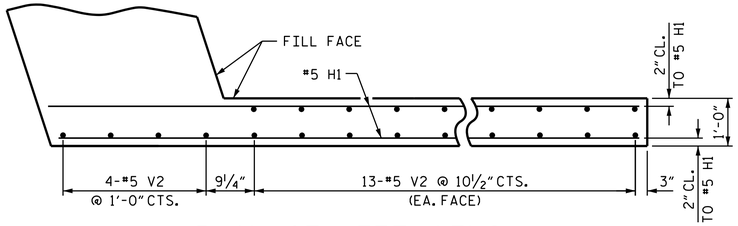

PLAN OF LEFT WING

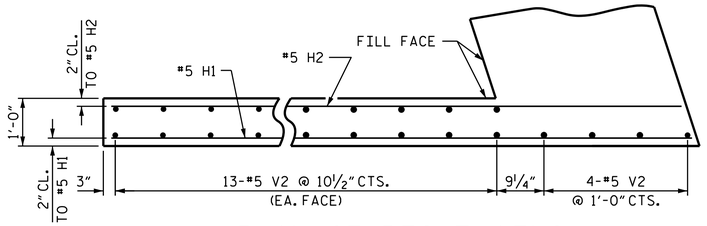

PLAN OF RIGHT WING

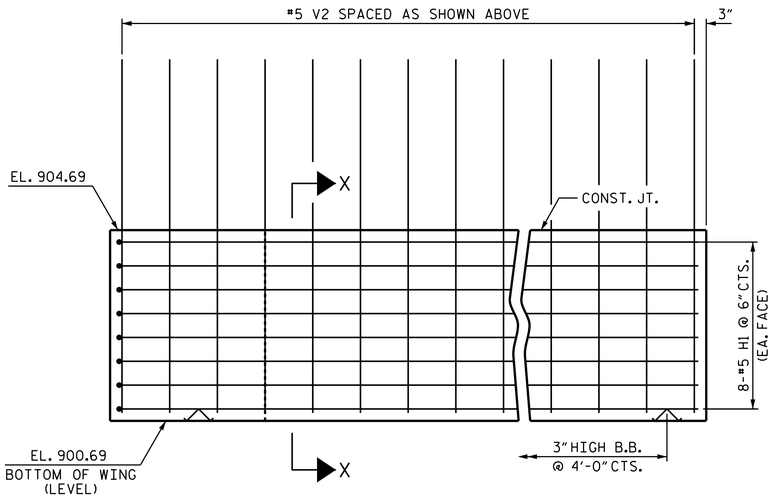

ELEVATION OF LEFT WING

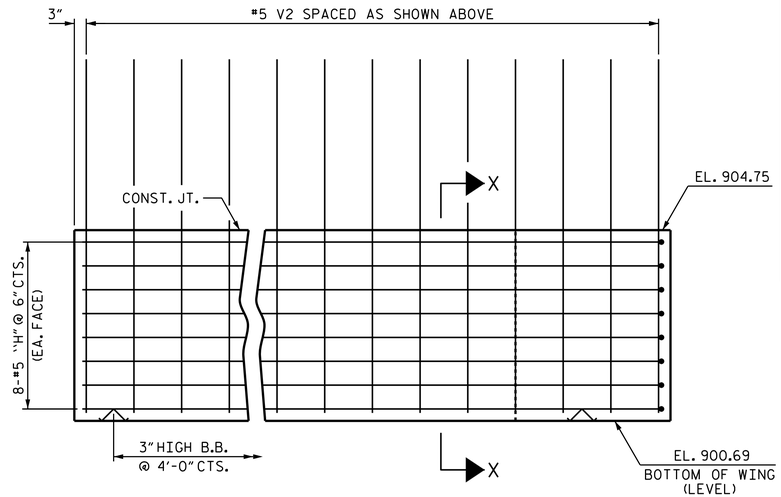

ELEVATION OF RIGHT WING

BAR TYPES

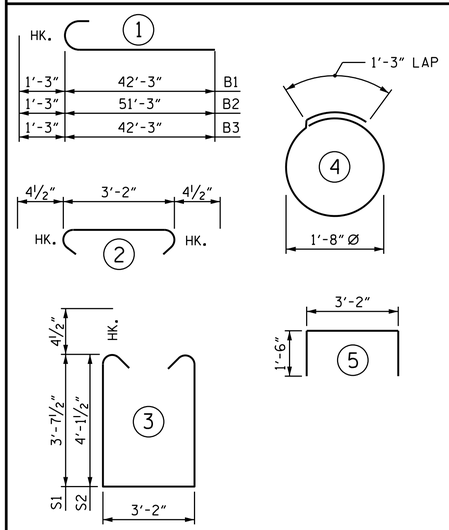

ALL BAR DIMENSIONS ARE OUT TO OUT.

BILL OF MATERIAL

END BENT 1

BAR	NO.	SIZE	TYPE	LENGTH	WEIGHT
B1	8	#9	1	43'-6"	1183
B2	4	#9	1	52'-6"	714
B3	4	#9	1	43'-6"	592
B4	4	#9	STR	42'-3"	575
B5	4	#9	STR	38'-9"	527
B6	50	#4	STR	24'-10"	829
B7	2	#4	STR	26'-2"	35
B8	8	#4	STR	18'-4"	98
B9	4	#4	STR	20'-6"	55
B10	32	#4	STR	3'-2"	68
H1	24	#5	STR	14'-5"	361
H2	8	#5	STR	14'-3"	119
S1	101	#4	3	11'-2"	753
S2	53	#4	3	12'-2"	431
S3	154	#4	2	3'-11"	403
S4	80	#4	4	6'-6"	347
U1	42	#4	5	6'-2"	173
V1	188	#4	STR	6'-9"	848
V2	60	#5	STR	10'-11"	683

REINFORCING STEEL	LBS.	8,794
CLASS A CONCRETE		
POUR #1	C.Y.	37.0
POUR #2	C.Y.	35.3
TOTAL	C.Y.	72.3
HP 12X53 STEEL PILES NO. 20	LIN. FT.	1,155

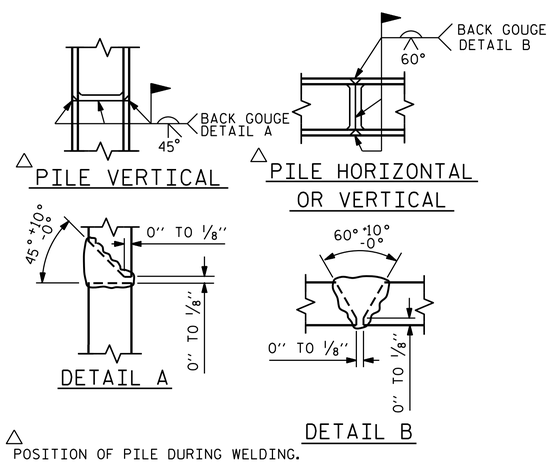

PILE SPLICE DETAILS

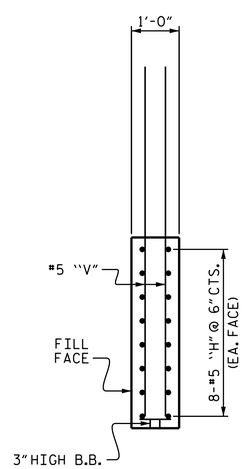

SECTION X-X

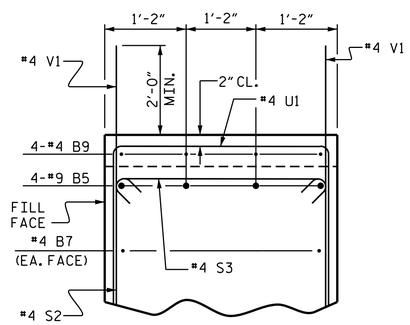

SECTION B-B

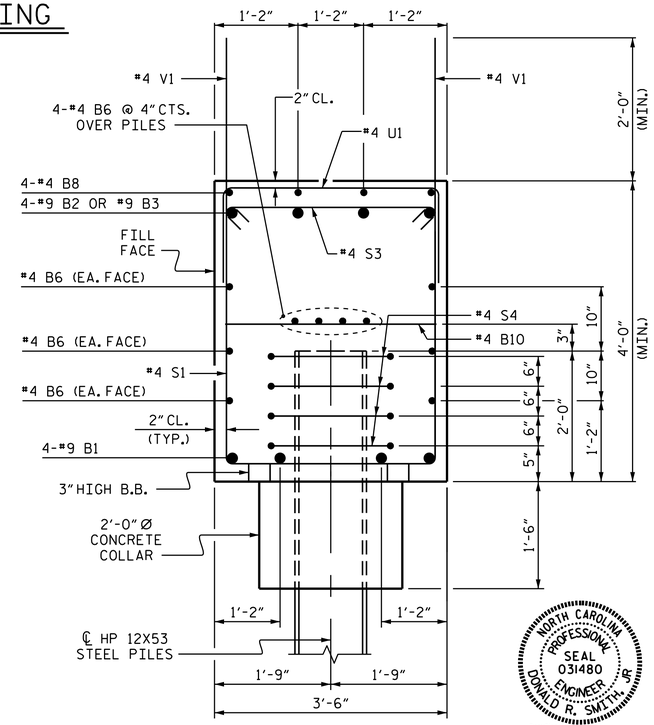

SECTION A-A

NORTH CAROLINA PROFESSIONAL SEAL 031480 ENGINEER DONALD R. SMITH JR.

DocuSigned by: Donald R. Smith Jr. 43B435A14F38465... 7/30/2014

PROJECT NO. U-2579B

FORSYTH COUNTY

STATION: 482+13.14 -L-

SHEET 3 OF 3

STATE OF NORTH CAROLINA
DEPARTMENT OF TRANSPORTATION
RALEIGH

SUBSTRUCTURE

INTEGRAL END BENT 1

REVISIONS						SHEET NO.
NO.	BY:	DATE:	NO.	BY:	DATE:	S-26
1			3			TOTAL SHEETS
2			4			707

STR. #1

DRAWN BY : J.D. HAWK DATE : 1/15/14
CHECKED BY : P.S. ADKINS DATE : 4/8/14
DESIGN ENGINEER OF RECORD: H.T. DIEU DATE : 6/9/14

29-JUL-2014 14:36
R:\Structures\Plans\Str01\U2579B_SD_E*_01.dgn
lsutton