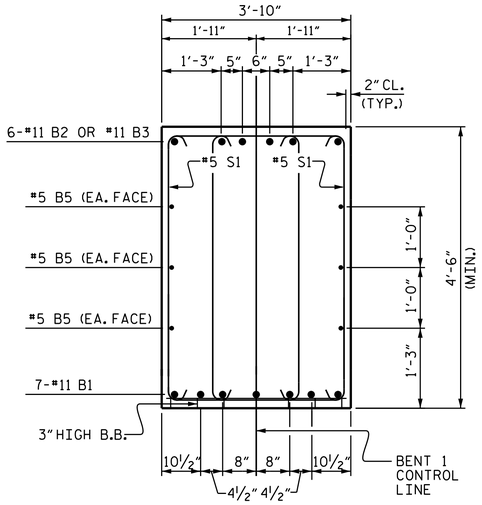

SECTION A-A

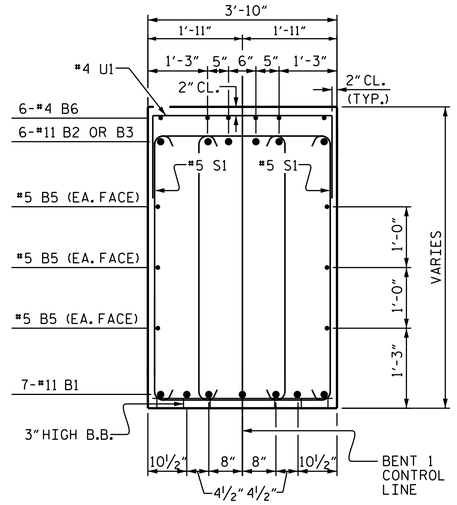

SECTION B-B

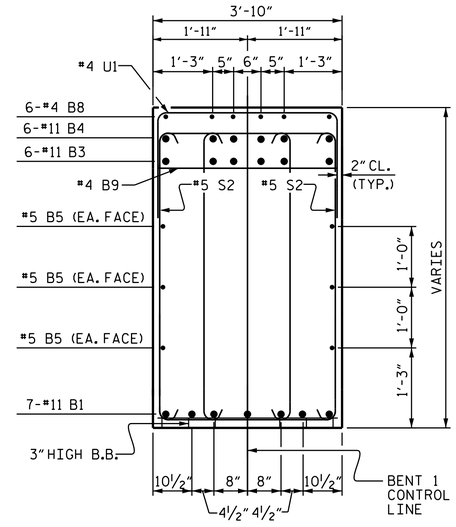

SECTION C-C

BAR TYPES

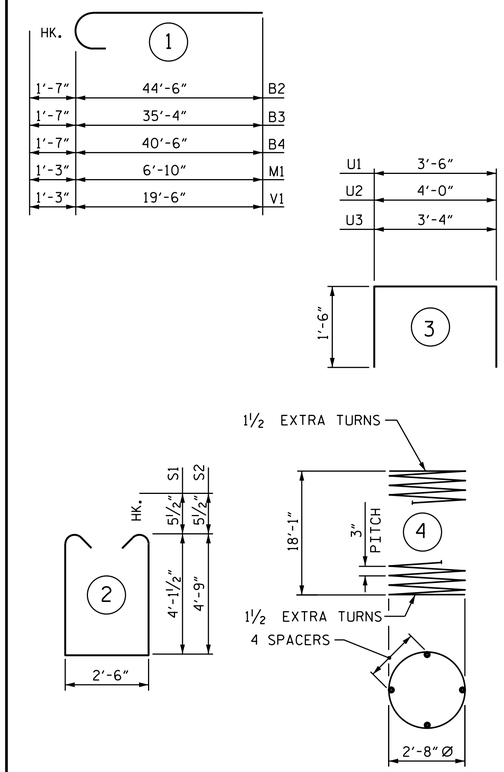

ALL BAR DIMENSIONS ARE OUT TO OUT.

BILL OF MATERIAL

BENT 1

BAR	NO.	SIZE	TYPE	LENGTH	WEIGHT
B1	14	#11	STR	57'-1"	4246
B2	6	#11	1	46'-1"	1469
B3	6	#11	1	36'-11"	1177
B4	6	#11	1	42'-1"	1342
B5	12	#5	STR	53'-8"	672
B6	12	#4	STR	18'-4"	147
B7	2	#5	STR	30'-6"	64
B8	6	#4	STR	22'-0"	88
B9	6	#4	STR	3'-6"	14
M1	72	#9	1	8'-1"	1979
S1	208	#5	2	11'-8"	2531
S2	140	#5	2	12'-11"	1886
T1	96	#6	STR	7'-3"	1045
T2	168	#8	STR	7'-3"	3252
U1	123	#4	3	6'-6"	534
U2	6	#4	3	7'-0"	28
U3	8	#4	3	6'-4"	34
V1	72	#9	1	20'-9"	5080
REINFORCING STEEL				LBS.	25,588
SP-1	6	✱✱	4	621'-7"	2,491
SPIRAL COLUMN REINFORCING STEEL				LBS.	2,491

CLASS A CONCRETE BREAKDOWN		
POUR #1 - FOOTINGS	C.Y.	43.4
POUR #2 - COLUMNS	C.Y.	28.0
POUR #3 - CAP (LT.)	C.Y.	31.4
POUR #4 - CAP (RT.)	C.Y.	42.1
TOTAL	C.Y.	144.9

FOUNDATION EXCAVATION		LUMP SUM
HP 12 x 53 STEEL PILES NO. 42	LIN. FT.	910
STEEL PILE POINTS	EA.	42

✱✱ THE SP-1 SPIRAL REINFORCING STEEL SHALL BE W20 OR D-20 COLD DRAWN WIRE OR #4 PLAIN OR DEFORMED BAR.

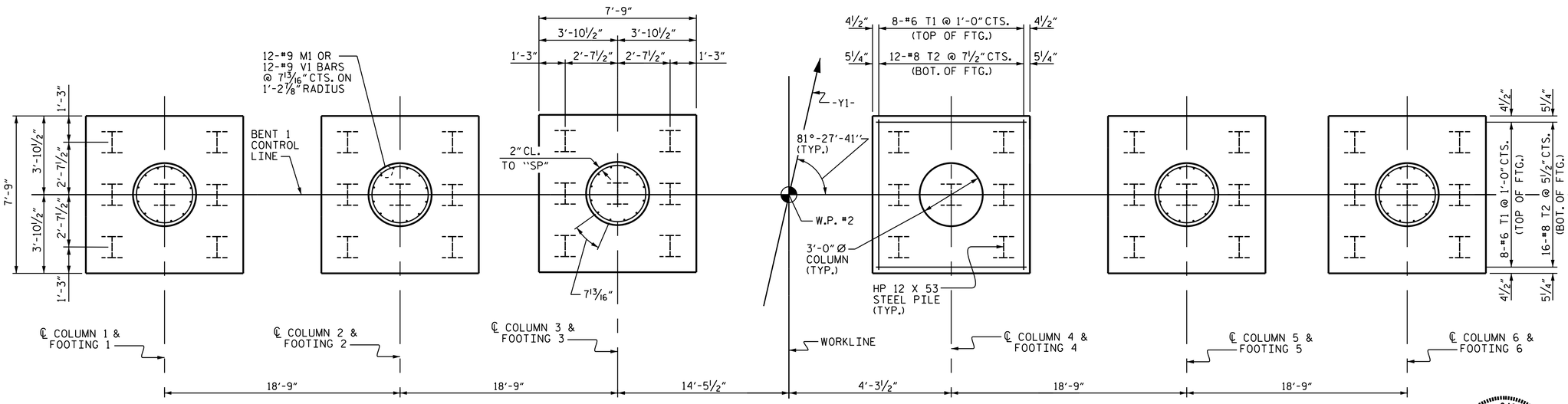

PLAN OF FOOTINGS & COLUMNS

DIMENSIONS AND REINFORCING STEEL ARE TYPICAL FOR EACH COLUMN & FOOTING.

PROJECT NO. U-2579B
FORSYTH COUNTY
STATION: 482+13.14 -L-

SHEET 3 OF 3

STATE OF NORTH CAROLINA
DEPARTMENT OF TRANSPORTATION
RALEIGH

SUBSTRUCTURE
BENT 1

NORTH CAROLINA PROFESSIONAL SEAL 031480 ENGINEER DONALD R. SMITH, JR.

DocuSigned by: Donald R. Smith Jr. F53C49C65D02420... 7/30/2014

REVISIONS						SHEET NO.
NO.	BY:	DATE:	NO.	BY:	DATE:	S-29
1			3			TOTAL SHEETS
2			4			707

STR. #1

DRAWN BY :	J.D. HAWK	DATE :	2/10/14
CHECKED BY :	K.D. LAYNE	DATE :	4/20/14
DESIGN ENGINEER OF RECORD:	H.T. DIEU	DATE :	6/9/14

30-JUL-2014 13:33
R:\Structures\Plans\Str01\U2579B_SD_B1_01.dgn
lsutton