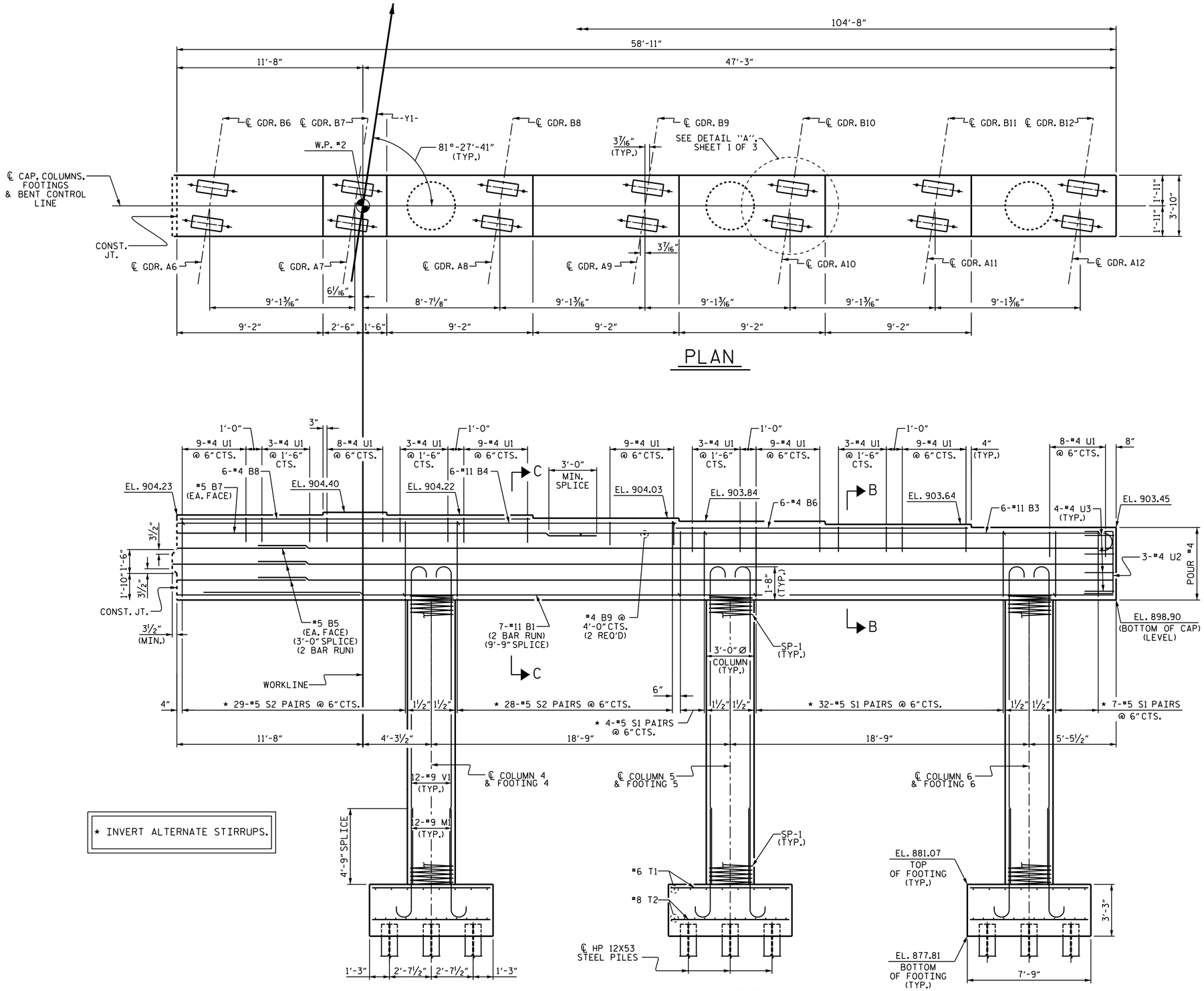

★ INVERT ALTERNATE STIRRUPS.

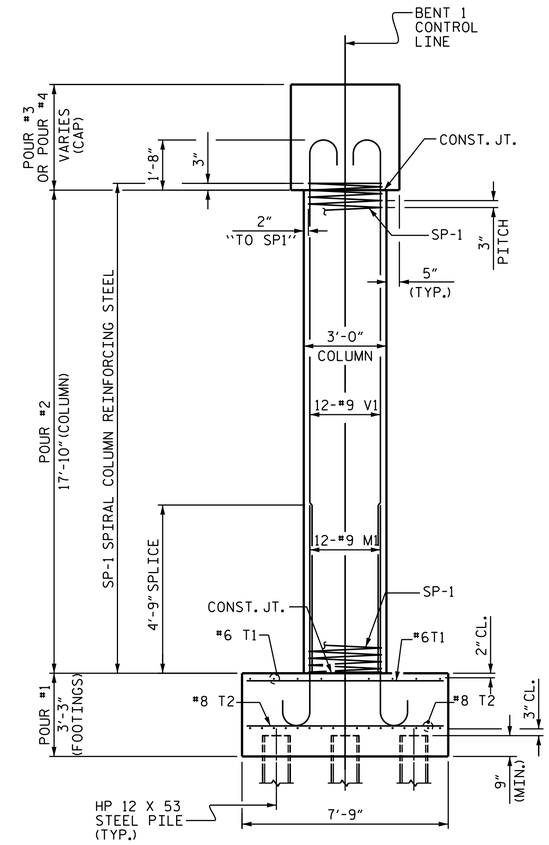

PROJECT NO. U-2579B

FORSYTH COUNTY

STATION: 482+13.14 -L-

SHEET 2 OF 3

STATE OF NORTH CAROLINA
DEPARTMENT OF TRANSPORTATION
RALEIGH

SUBSTRUCTURE
BENT 1

NORTH CAROLINA PROFESSIONAL SEAL 031480 ENGINEER DONALD R. SMITH, JR.

DocuSigned by: Donald R. Smith Jr.
43B435A14F3B465...
7/30/2014

REVISIONS						SHEET NO.
NO.	BY:	DATE:	NO.	BY:	DATE:	S-28
1			3			TOTAL SHEETS
2			4			707

STR. #1

DRAWN BY :	J.D. HAWK	DATE :	2/10/14
CHECKED BY :	K.D. LAYNE	DATE :	4/20/14
DESIGN ENGINEER OF RECORD:	H.T. DIEU	DATE :	6/9/14

29-JUL-2014 14:36
R:\Structures\Plans\Str01\U2579B_SD_B1_01.dgn
lsutton