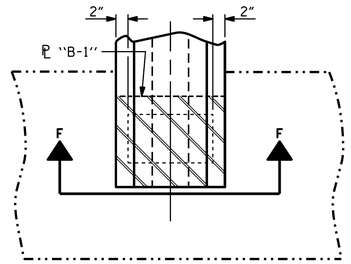

TYPICAL PLAN @ INTEGRAL END BENT

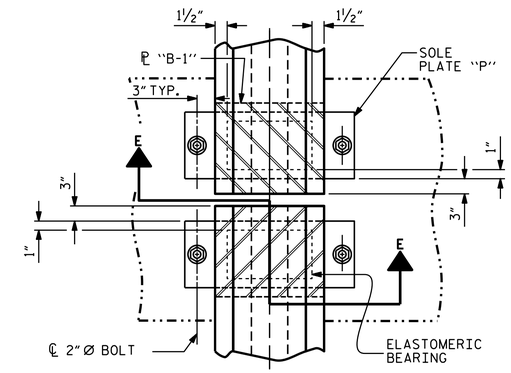

TYPICAL PLAN @ BENT

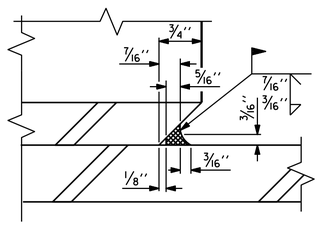

DETAIL "A"

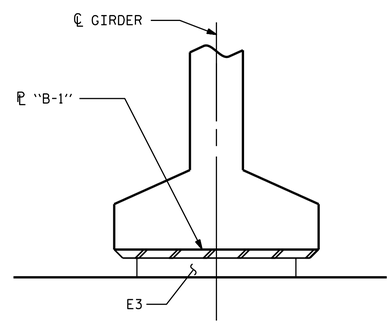

SECTION F-F

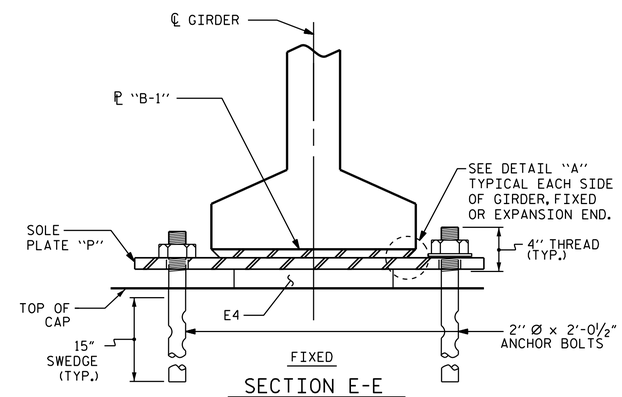

SECTION E-E

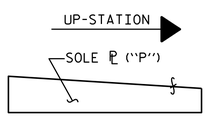

SOLE ℄ PLACEMENT DETAIL

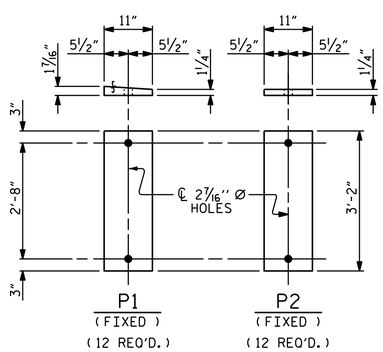

SOLE PLATE DETAILS ("P")

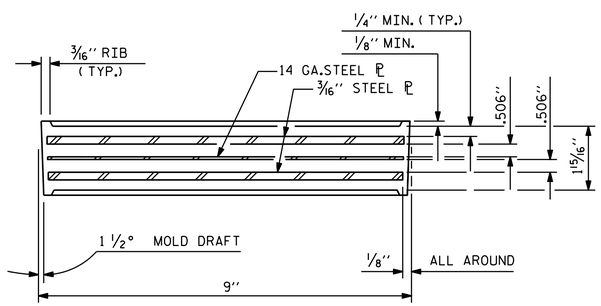

TYPICAL SECTION OF ELASTOMERIC BEARINGS

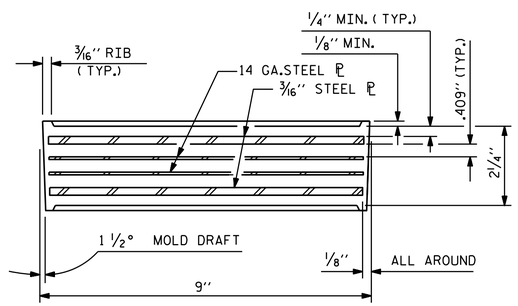

TYPICAL SECTION OF ELASTOMERIC BEARINGS

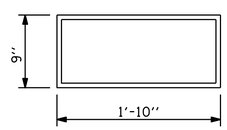

E3 (24 REQ'D.)

PLAN VIEW OF ELASTOMERIC BEARING

TYPE IV

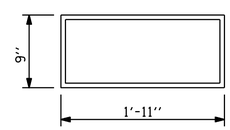

E4 (24 REQ'D.)

PLAN VIEW OF ELASTOMERIC BEARING

TYPE V

NOTES

AT ALL FIXED POINTS OF SUPPORT, NUTS FOR ANCHOR BOLTS ARE TO BE TIGHTENED FINGER TIGHT AND THEN BACKED OFF ½ TURN. THE THREAD OF THE NUT AND BOLT SHALL THEN BE BURRED WITH A SHARP POINTED TOOL.

STEEL SOLE PLATES, ANCHOR BOLTS, NUTS, AND WASHERS SHALL BE GALVANIZED IN ACCORDANCE WITH THE STANDARD SPECIFICATIONS.

PRIOR TO WELDING, GRIND THE GALVANIZED SURFACE OF THE PORTION OF THE EMBEDDED PLATE AND SOLE PLATE THAT ARE TO BE WELDED. AFTER WELDING, DAMAGED GALVANIZED SURFACES SHALL BE REPAIRED IN ACCORDANCE WITH THE STANDARD SPECIFICATIONS.

WHEN WELDING THE SOLE PLATE TO THE EMBEDDED PLATE IN THE GIRDER, USE TEMPERATURE INDICATING WAX PENS, OR OTHER SUITABLE MEANS, TO ENSURE THAT THE TEMPERATURE OF THE SOLE PLATE DOES NOT EXCEED 300°F. TEMPERATURES ABOVE THIS MAY DAMAGE THE ELASTOMER.

SOLE PLATE "P", BOLTS, NUTS, AND WASHERS SHALL BE INCLUDED IN THE PAY ITEM FOR PRESTRESSED CONCRETE GIRDERS.

ANCHOR BOLTS SHALL MEET THE REQUIREMENTS OF ASTM A449. NUTS SHALL MEET THE REQUIREMENTS OF AASHTO M291-DH OR AASHTO M292-2H. WASHERS SHALL MEET THE REQUIREMENTS OF AASHTO M293. SHOP DRAWINGS ARE NOT REQUIRED FOR ANCHOR BOLTS, NUTS AND WASHERS. SHOP INSPECTION IS REQUIRED.

ALL SURFACES OF BEARING PLATES SHALL BE SMOOTH AND STRAIGHT.

THE ELASTOMER IN THE STEEL REINFORCED BEARINGS SHALL HAVE A SHEAR MODULUS OF 0.160 KSI, IN ACCORDANCE WITH AASHTO M251.

FOR STEEL REINFORCED ELASTOMERIC BEARINGS, SEE SPECIAL PROVISIONS.

MAXIMUM ALLOWABLE SERVICE LOADS	
D.L.+L.L. (NO IMPACT)	
TYPE IV	225 k
TYPE V	365 k

PROJECT NO. U-2579B
FORSYTH COUNTY
STATION: 482+13.14 -L-

STATE OF NORTH CAROLINA
DEPARTMENT OF TRANSPORTATION
RALEIGH

STANDARD

ELASTOMERIC BEARING DETAILS

PRESTRESSED CONCRETE GIRDER SUPERSTRUCTURE

NORTH CAROLINA PROFESSIONAL SEAL 031480 ENGINEER DONALD R. SMITH

DocuSigned by: Donald R. Smith Jr.
43B435A14F38465...
7/30/2014

REVISIONS						SHEET NO.
NO.	BY:	DATE:	NO.	BY:	DATE:	S-19
1			3			TOTAL SHEETS
2			4			707

ASSEMBLED BY : M.K. BEARD DATE : 1/9/14
CHECKED BY : P.S. ADKINS DATE : 3/10/14

DRAWN BY : EEM 2/97
CHECKED BY : VAP 2/97

REV. 5/1/06 TLA/GM
REV. 10/1/11 MAA/GM
REV. 6/13 AAC/MAA

DESIGN ENGINEER OF RECORD:
H.T. DIEU DATE : 6/9/14

29-JUL-2014 14:35
R:\Structures\Plans\Str01\U2579B_SD_BG_01.dgn
lsutton

STR. #1

STD. NO. EB4