PROJECT REFERENCE NO.	SHEET NO.
U-2579B	UC-3B
UTILITY CONSTRUCTION PLANS ONLY	UTILITY CONSTRUCTION PLANS ONLY

NORTH CAROLINA PROFESSIONAL SEAL 025507 ENGINEER JAN TEEPLE — 8/11/2014

NORTH CAROLINA PROFESSIONAL SEAL 037995 SURVEYOR ASHLEY S. WEBB — 8/11/2014

8/17/99

REVISIONS

MANHOLE RING & COVER TYPE 2

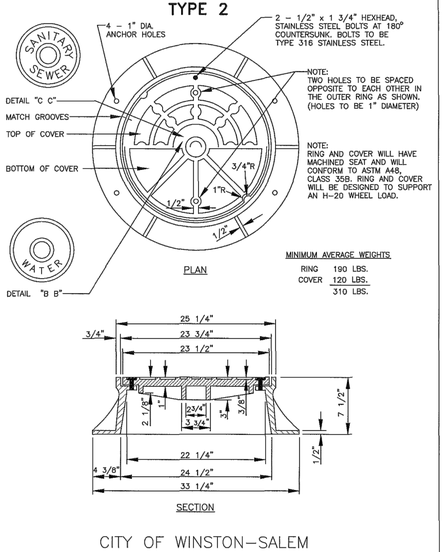

CITY OF WINSTON–SALEM
DEPARTMENT OF PUBLIC WORKS
ENGINEERING DIVISION

N.T.S. REVISED 9–20–01 APPROVED

utility_spec_drawings/mh_r&c_type2.dwg VII–17

MANHOLE RING & COVER TYPE 3

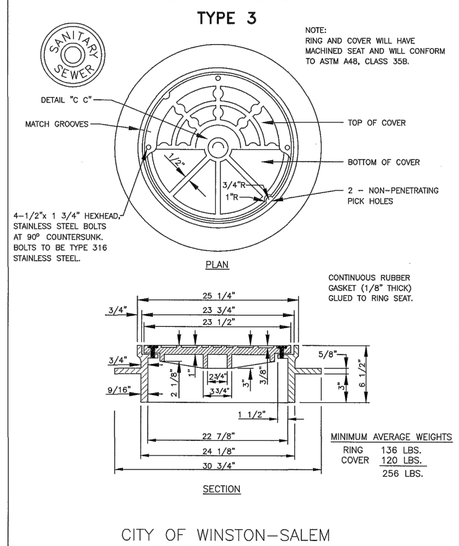

CITY OF WINSTON–SALEM
DEPARTMENT OF PUBLIC WORKS
ENGINEERING DIVISION

N.T.S. REVISED 9–20–01 APPROVED

utility_spec_drawings/mh_r&c_type3.dwg VII–18

POLYPROPYLENE MANHOLE STEP

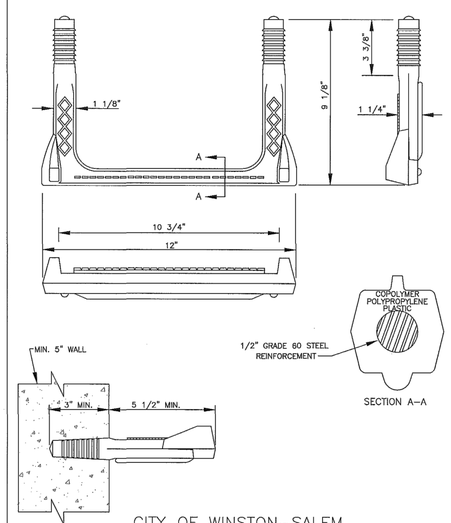

CITY OF WINSTON–SALEM
DEPARTMENT OF PUBLIC WORKS
ENGINEERING DIVISION

N.T.S. REVISED 9–20–01 APPROVED

utility_spec_drawings/mh_step.dwg VII–19

CAST IRON VALVE BOX

NOTES:

1. VALVE BOX WILL CONFORM TO ASTM A48, CLASS 30 B
2. MINIMUM WEIGHTS:
   COVER..... 29 LBS.
   TOP SECTION..... 60 LBS.
   BOTTOM SECTION.... 49 LBS.
   TOTAL.... 138 LBS.

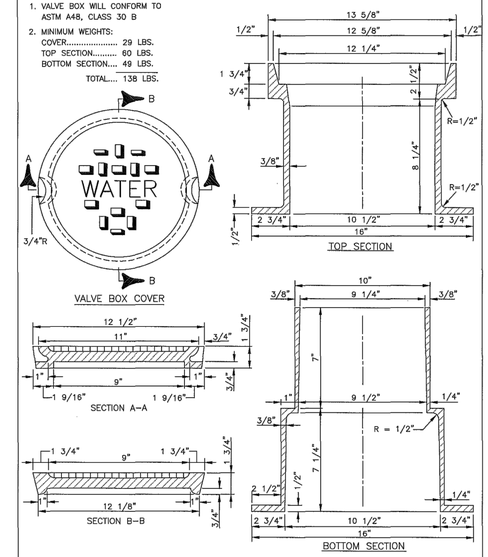

CITY OF WINSTON–SALEM
DEPARTMENT OF PUBLIC WORKS
ENGINEERING DIVISION

N.T.S. REVISED 9–20–01 APPROVED

R:\Data\Utility\Utility Spec Drawings/cast_iron_valve_box.dwg VII–37

VALVE BOX INSTALLATION

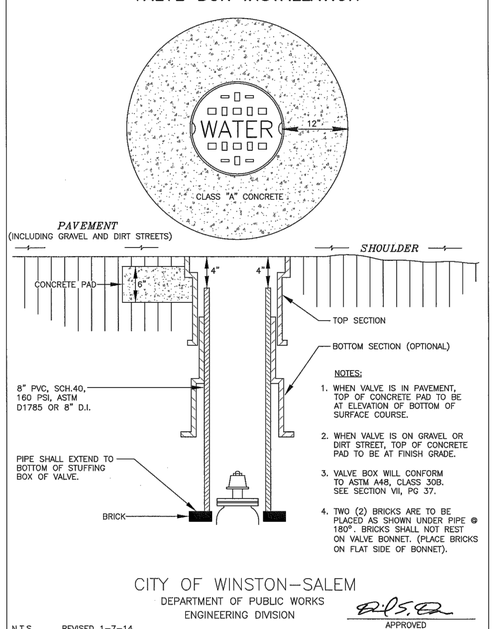

NOTES:

1. WHEN VALVE IS IN PAVEMENT, TOP OF CONCRETE PAD TO BE AT ELEVATION OF BOTTOM OF SURFACE COURSE.
2. WHEN VALVE IS ON GRAVEL OR DIRT STREET, TOP OF CONCRETE PAD TO BE AT FINISH GRADE.
3. VALVE BOX WILL CONFORM TO ASTM A48, CLASS 30B. SEE SECTION VII, PG 37.
4. TWO (2) BRICKS ARE TO BE PLACED AS SHOWN UNDER PIPE @ 180°. BRICKS SHALL NOT REST ON VALVE BONNET. (PLACE BRICKS ON FLAT SIDE OF BONNET).

CITY OF WINSTON–SALEM
DEPARTMENT OF PUBLIC WORKS
ENGINEERING DIVISION

N.T.S. REVISED 1–7–14 APPROVED

R:\Data\Utility\Utility Spec Drawings/valve box installation.dwg VII–38

HYDRANT AND VALVE INSTALLATION

NOTES:

1. HYDRANTS, VALVES AND THEIR ACCESSORIES ARE TO BE FURNISHED AS SPECIFIED IN THE TECHNICAL SPECIFICATIONS OF THE ENGINEERING DIVISION OF THE CITY OF WINSTON–SALEM, N.C.
2. ANY JOINTS BETWEEN THE VALVE AND HYDRANT MUST HAVE RETAINER GLANDS.

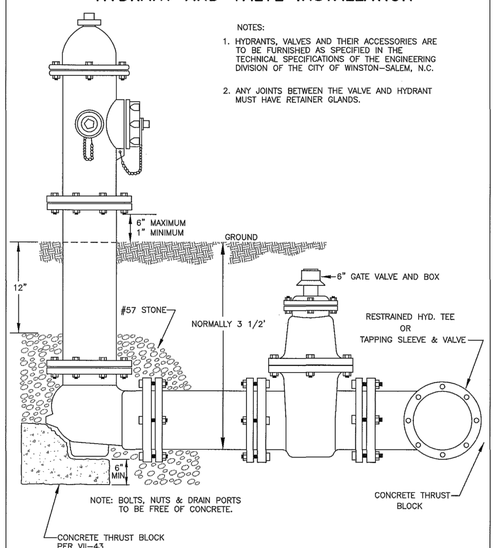

CITY OF WINSTON–SALEM
DEPARTMENT OF PUBLIC WORKS
ENGINEERING DIVISION

N.T.S. REVISED 1–7–14 APPROVED

R:\Data\Utility\Utility Spec Drawings/hydrant and valve installation.dwg VII–39

CONCRETE THRUST BLOCKS

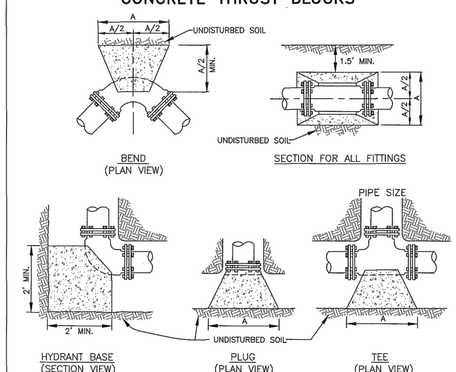

FITTING	MINIMUM "A" DIMENSION (FEET)									
	PIPE SIZE (INCHES)									
	2	4	6	8	12	16	20	24	30	36
90° BEND	1.0	2.0	2.5	3.5	5.0	6.5	8.0	10.0	12.0	14.5
45° BEND	1.0	1.5	2.0	2.5	4.0	5.0	6.0	7.0	9.0	10.5
22 1/2° BEND	0.5	1.0	1.5	2.0	3.0	3.5	4.5	5.0	6.5	7.5
11 1/4° BEND	0.5	1.0	1.0	1.5	2.0	2.5	3.0	4.0	4.5	5.5
PLUG/TEE	1.0	1.5	2.5	3.0	4.5	5.5	7.0	8.0	10.0	12.0

NOTE: ABOVE DIMENSIONS BASED ON THE FOLLOWING: 250 PSI WATER PRESSURE AND 2000 LB/SQ FT SOIL BEARING CAPACITY (SOFT CLAY)

CITY OF WINSTON–SALEM
DEPARTMENT OF PUBLIC WORKS
ENGINEERING DIVISION

N.T.S. REVISED 11–7–13 APPROVED

R:\Data\Utility\Utility Spec Drawings/conc_thrust_blocks2013.dwg VII–43

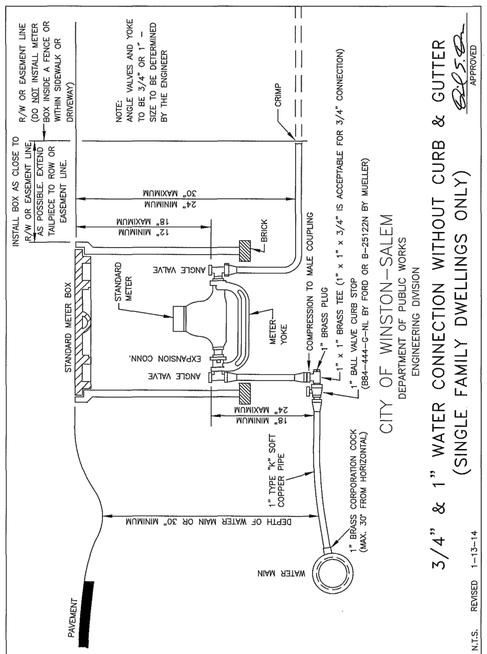

CITY OF WINSTON–SALEM
DEPARTMENT OF PUBLIC WORKS
ENGINEERING DIVISION

3/4" & 1" WATER CONNECTION WITHOUT CURB & GUTTER (SINGLE FAMILY DWELLINGS ONLY)

APPROVED

N.T.S. REVISED 1–13–14

R:\Data\Utility\Utility Spec Drawings\wconn c&g pg46.dwg VII–46