DocuSign Envelope ID: 9902AAAD-E369-4BAA-98A5-8226DAF4240A

PROJECT REFERENCE NO.	SHEET NO.
U-2579B	ITS-61

SPLICE NO. S-06

CCTV-054 HUB

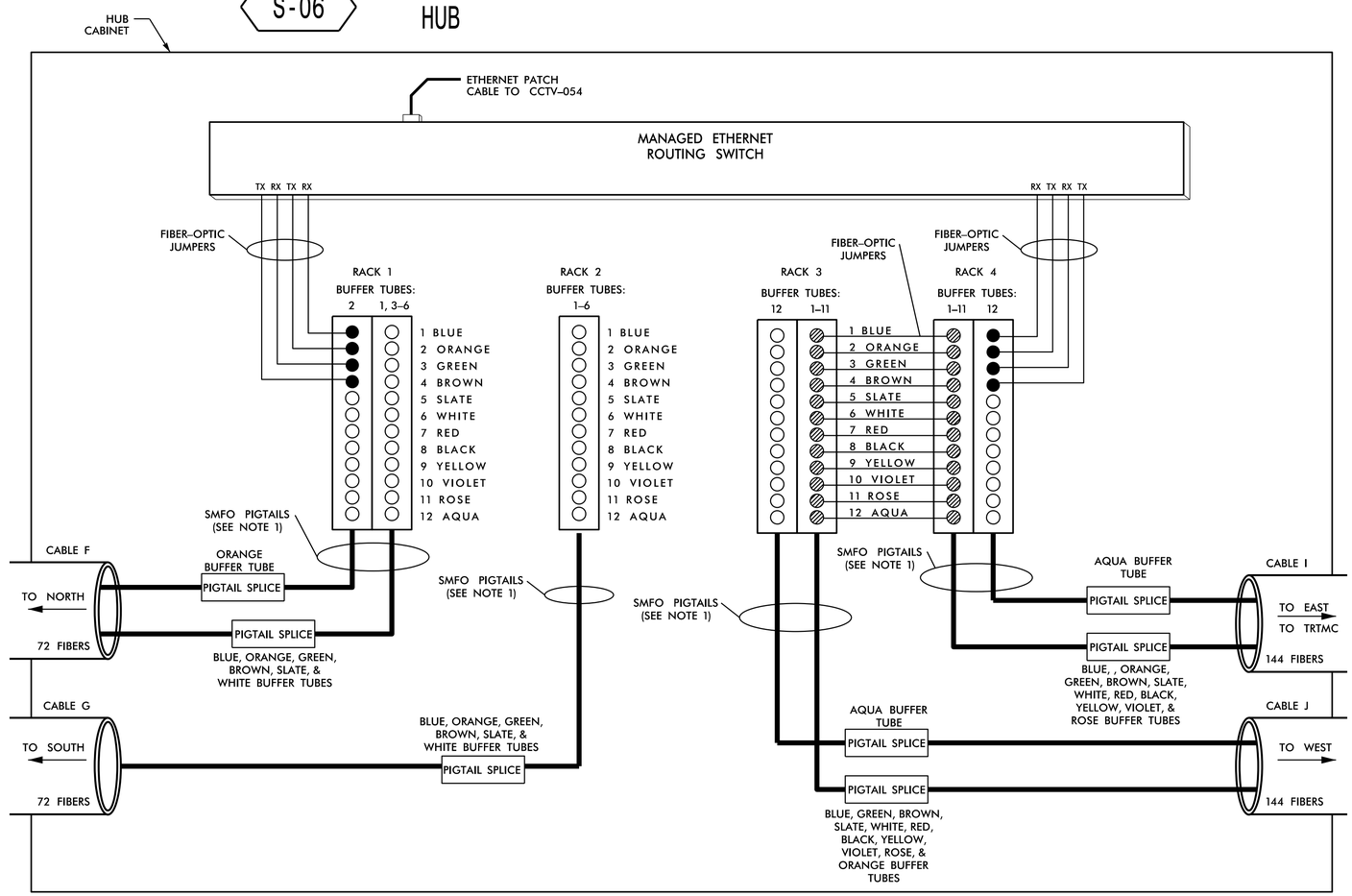

NOTE:

1. SPLICE SMFO PIGTAILS TO BUFFER TUBES COLOR TO COLOR.

● FIBERS IN USE
○ FIBERS NOT IN USE
▨ FIBER USE UNKNOWN

LEGEND

COLOR CODE TIA/EIA 598-B

(1) BLUE	(7) RED
(2) ORANGE	(8) BLACK
(3) GREEN	(9) YELLOW
(4) BROWN	(10) VIOLET
(5) SLATE	(11) ROSE
(6) WHITE	(12) AQUA

X = FUSION SPLICE INDIVIDUAL FIBER

C = CAP AND SEAL

EXPRESS = EXPRESS ENTIRE BUFFER TUBE /FIBERS THROUGH WITHOUT CUTTING

BUFFER SPLICE = SPLICE ALL FIBERS IN BUFFER TUBE COLOR TO COLOR

NOTES

1. UNUSED FIBERS LEFT COILED AND STORED IN SPLICE TRAY
2. UNUSED BUFFER TUBES LEFT COILED AND STORED IN SPLICE ENCLOSURE
3. EDGE SWITCH CONFIGURATIONS ARE GENERIC. CONTRACTOR IS RESPONSIBLE FOR DETERMINING/ENSURING THE PROPER TERMINATIONS.

ATKINS
5200 77 CENTER DR, SUITE 500
CHARLOTTE, NC 28217
704.665.4411 NCBEES #F-0326

Prepared in the Offices of:
Transportation Mobility and Safety Division
STATE OF NORTH CAROLINA DEPARTMENT OF TRANSPORTATION
Intelligent Transportation Systems
750 N. Greenfield Pkwy., Garner, NC 27529

SCALE

Fiber-Optic Splicing Details

DIVISION 09 FORSYTH CO KERNERSVILLE

PLAN DATE:	JUNE 2014	REVIEWED BY:	HAB
PREPARED BY:	BJS	REVIEWED BY:	JTB

REVISIONS	INIT.	DATE

SEAL
NORTH CAROLINA PROFESSIONAL ENGINEER SEAL 019962 ALFRED BADGETT JR.
DocuSigned by: Alf Badgett 6/9/2014
6D2F43EEF9BC43F
SIGNATURE DATE

CADD Filename: u2579b_its_FS-04.dgn