PROJECT REFERENCE NO.	SHEET NO.
U-2579B	UC-3A
UTILITY CONSTRUCTION PLANS ONLY	UTILITY CONSTRUCTION PLANS ONLY

NORTH CAROLINA PROFESSIONAL SEAL 025507 ENGINEER ALAN TEMPLE
Docusigned by: 1C2E6A0A0A0A0A0... 6/12/2014

NORTH CAROLINA PROFESSIONAL SEAL 037995 ENGINEER EVE S. WEBB
Docusigned by: 9BAD7A0A0A0A0A0... 6/12/2014

8/17/99

REVISIONS

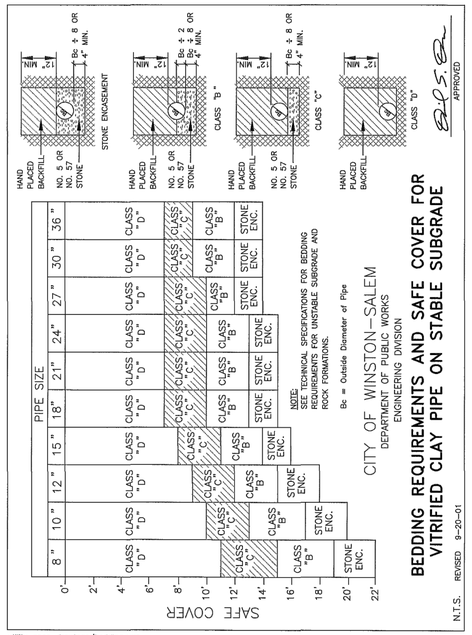

BEDDING REQUIREMENTS AND SAFE COVER FOR VITRIFIED CLAY PIPE ON STABLE SUBGRADE

N.T.S. REVISED 9-20-01

utility_spec_drawings/bedding.dwg VII-7

4 FT. PRECAST REINFORCED CONCRETE MANHOLE

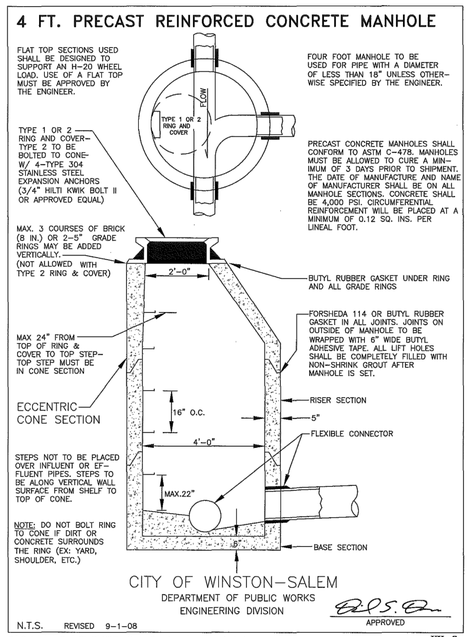

N.T.S. REVISED 9-1-08

R:\Data\AutoCad Stuff\Utility Spec Drawings/precast_4mh.dwg VII-8

5 FT. PRECAST REINFORCED CONCRETE MANHOLE

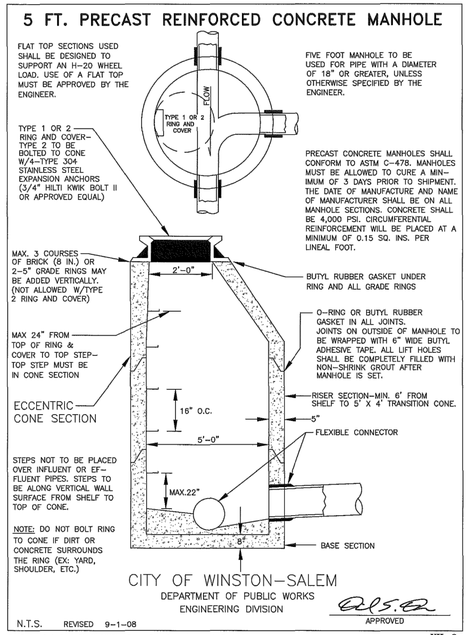

N.T.S. REVISED 9-1-08

R:\Data\AutoCad Stuff\Utility Spec Drawings/precast_5mh.dwg VII-9

TYPE "B" 4' & 5' PRECAST REINFORCED CONCRETE MANHOLE

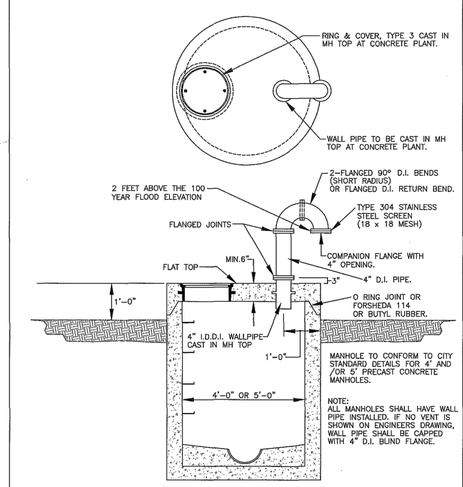

N.T.S. REVISED 9-1-08

R:\Data\Utility\Utility Spec Drawings\type_B_mh.dwg VII-10

MANHOLE BUILT OVER EXISTING LINE

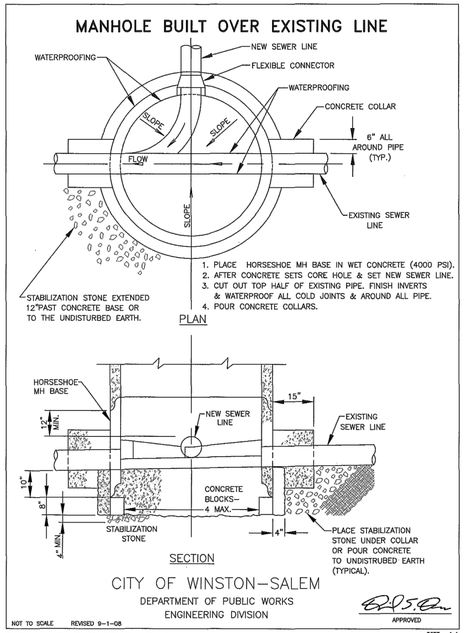

NOT TO SCALE REVISED 9-1-08

R:\Data\AutoCad Stuff\Utility Spec Drawings/mh_over_line.dwg VII-11

OUTSIDE DROP MANHOLE

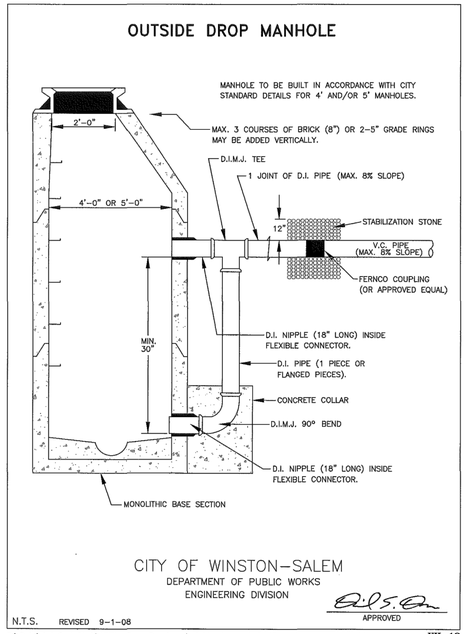

N.T.S. REVISED 9-1-08

R:\Data\AutoCad Stuff\Utility Spec Drawings/outside_drop_mh.dwg VII-12

PRECAST REINFORCED CONCRETE MANHOLE WITH PRECAST INVERT

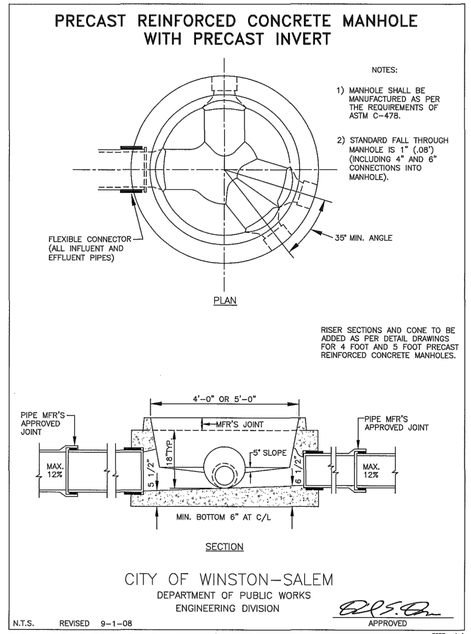

N.T.S. REVISED 9-1-08

R:\Data\AutoCad Stuff\Utility Spec Drawings/precast_invert.dwg VII-14

FLEXIBLE MANHOLE CONNECTOR

NOTE: FLEXIBLE MANHOLE CONNECTORS SHALL CONFORM TO ASTM C923. CONNECTORS BY PRESS-SEAL GASKET CORPORATION, HAMILTON KENT OR NPC, INC. ARE ACCEPTABLE. MAXIMUM DEFLECTION FOR CONNECTOR IS 7° (12%). SLOPES GREATER THAN 12% MUST HAVE CONNECTORS DESIGNED FOR HIGHER DEFLECTION.

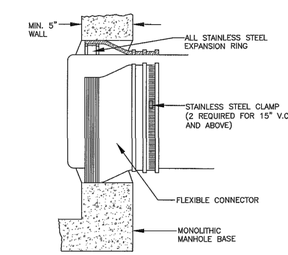

CITY OF WINSTON-SALEM
DEPARTMENT OF PUBLIC WORKS
ENGINEERING DIVISION
APPROVED

NOT TO SCALE REVISED 9-1-08

R:\Data\Utility\Utility Spec Drawings/flexible_manhole_connector.dwg VII-15