8/17/99

REVISIONS

PROJECT REFERENCE NO.	SHEET NO.
U-2579B	UC-3C
UTILITY CONSTRUCTION PLANS ONLY	UTILITY CONSTRUCTION PLANS ONLY

NORTH CAROLINA PROFESSIONAL SEAL 025507 ENGINEER ALAN R. TEMPLE — 8/13/2014

NORTH CAROLINA PROFESSIONAL SEAL 037995 ENGINEER JEFFREY S. WEBB — 8/13/2014

CAST IRON METER BOX FOR 5/8" AND 1" METERS

NOTES:

1. MINIMUM WEIGHTS:
   A– 5/8" BOX w/COVER....103 LBS.
   B– 1" BOX w/COVER....120 LBS.
2. METER BOX WILL CONFORM TO ASTM A48, CLASS 30B.
3. 5/8" BOX DIMENSIONS ARE SHOWN
4. 1" METER BOX IS 6" LONGER THAN 5/8" BOX. ALL OTHER DIMENSIONS ARE SAME AS SHOWN.

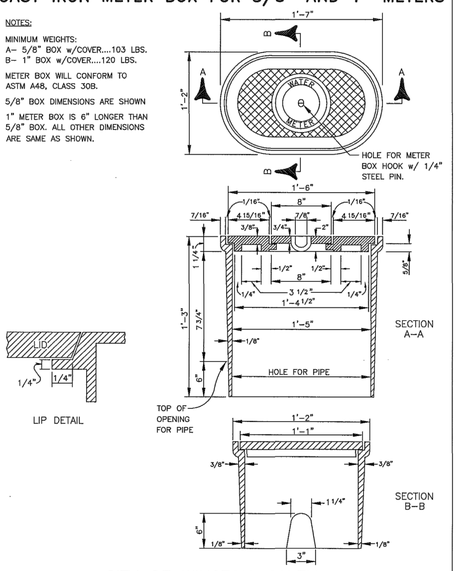

CITY OF WINSTON–SALEM
DEPARTMENT OF PUBLIC WORKS
ENGINEERING DIVISION

N.T.S. REVISED 9–1–08 APPROVED

R:\Data\Utility\Utility Spec Drawings/meter box.dwg

VII–48

AIR RELEASE VALVE

NOTE:
MANHOLE SHALL CONFORM TO ASTM C–478 SPECIFICATION. JOINTS SHALL BE THE SAME AS FOR 4'& 5' PRECAST REINFORCED CONCRETE MANHOLES. TOP SLAB TO BE DESIGNED TO SUPPORT AN H–20 WHEEL LOAD.

NOTE:
MANHOLE COVER SHALL BE CAST WITH THE WORD "WATER" OR "SANITARY SEWER" ACROSS THE TOP AND SHALL HAVE TWO HOLES SPACED OPPOSITE TO EACH OTHER IN THE OUTER RING OF THE COVER.

NOTE:
ROTATE TOP SLAB TO CENTER 2'–0" OPENING OVER BOTH CURB STOPS.

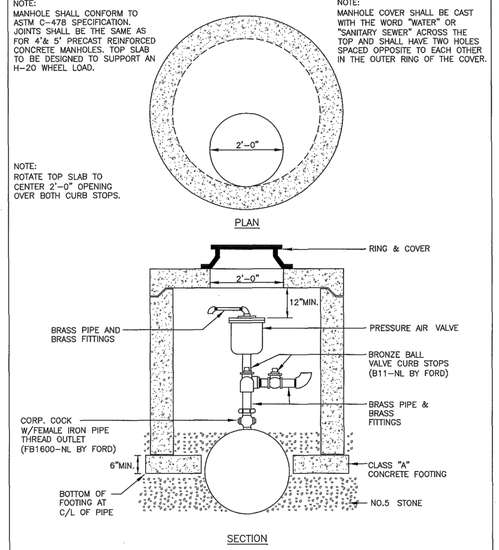

CITY OF WINSTON–SALEM
DEPARTMENT OF PUBLIC WORKS
ENGINEERING DIVISION

SHEET 1 OF 2
N.T.S. REVISED 1–7–14 APPROVED

R:\Data\Utility\Utility Spec Drawings/air_release_valve_center.dwg

VII–51

AIR RELEASE VALVE

NOTE:
MANHOLE SHALL CONFORM TO ASTM C–478 SPECIFICATION. JOINTS SHALL BE THE SAME AS FOR 4'& 5' PRECAST REINFORCED CONCRETE MANHOLES. TOP SLAB TO BE DESIGNED TO SUPPORT AN H–20 WHEEL LOAD.

NOTE:
MANHOLE COVER SHALL BE CAST WITH THE WORD "WATER" OR "SANITARY SEWER" ACROSS THE TOP AND SHALL HAVE TWO HOLES SPACED OPPOSITE TO EACH OTHER IN THE OUTER RING OF THE COVER.

NOTE:
ROTATE TOP SLAB TO CENTER 2'–0" OPENING OVER BOTH CURB STOPS.

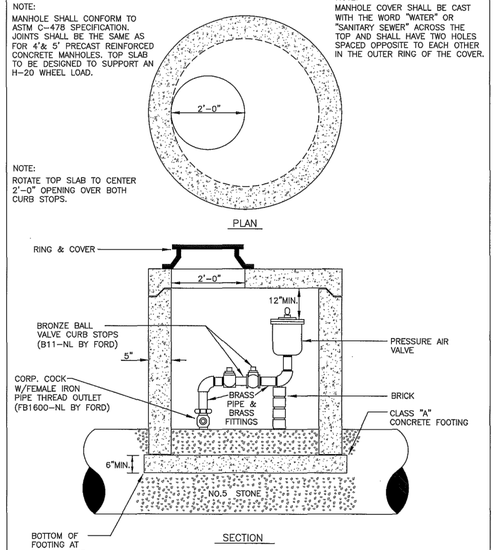

CITY OF WINSTON–SALEM
DEPARTMENT OF PUBLIC WORKS
ENGINEERING DIVISION

SHEET 2 OF 2
N.T.S. REVISED 1–7–14 APPROVED

R:\Data\Utility\Utility Spec Drawings/air_release_valve_offset.dwg

VII–52

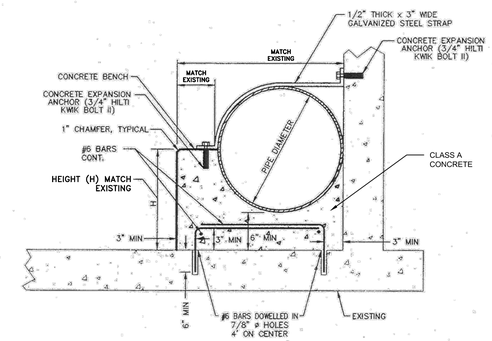

ANCHORING DETAIL

THRUST COLLAR FOR EXISTING 16" PIPE

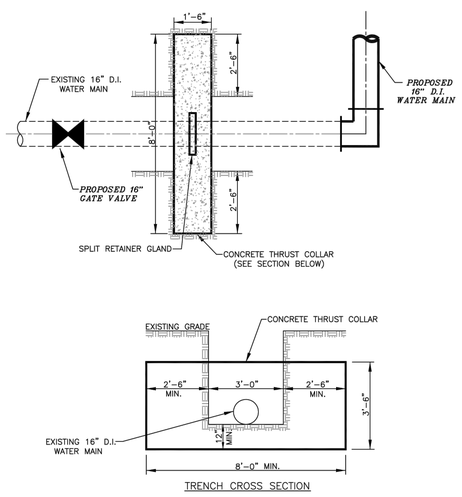

NOTES:

1. CONCRETE THRUST COLLAR SHALL BE PLACED AND CURED THREE DAYS PRIOR TO CUTTING EXISTING PIPE.
2. INSTALL POLYETHYLENE WRAP AROUND EXISTING PIPE PRIOR TO POURING CONCRETE.

CITY OF WINSTON–SALEM
DEPARTMENT OF PUBLIC WORKS
ENGINEERING DIVISION

N.T.S.

utility_spec_drawings/thrust_restraint.dwg

THRUST COLLAR FOR EXISTING 20" PIPE

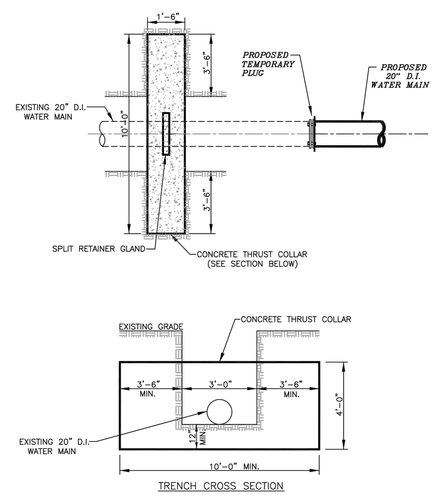

NOTES:

1. CONCRETE THRUST COLLAR SHALL BE PLACED AND CURED THREE DAYS PRIOR TO CUTTING EXISTING PIPE.
2. INSTALL POLYETHYLENE WRAP AROUND EXISTING PIPE PRIOR TO POURING CONCRETE.

CITY OF WINSTON–SALEM
DEPARTMENT OF PUBLIC WORKS
ENGINEERING DIVISION

N.T.S.

utility_spec_drawings/thrust_restraint.dwg

TRENCH DETAIL

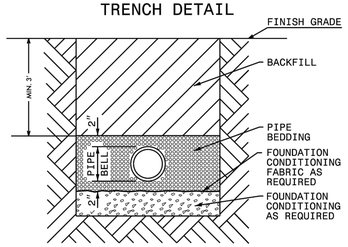

PLACE FOUNDATION CONDITIONING MATERIAL BELOW BEDDING IF REQUIRED, AS DIRECTED BY ENGINEER. PIPE BEDDED IN SELECT MATERIAL, CLASS II (TYPE 1) OR CLASS III. TRENCH BACKFILLED IN LOOSE 6" LAYERS COMPACTED TO TOP OF TRENCH USING LOCAL EXCAVATED MATERIAL IF APPROVED BY THE ENGINEER, OR SELECT MATERIAL. ALL MATERIAL SHALL BE FREE OF ROCKS, FOREIGN MATERIAL, AND FROZEN EARTH. COMPACTION SHALL BE TO APPROXIMATELY 95% DENSITY IN ACCORDANCE WITH AASHTO T-99 AS MODIFIED BY THE DEPARTMENT OF TRANSPORTATION.

MAXIMUM TRENCH WIDTH AT TOP OF PIPE

NOMINAL PIPE SIZE (INCHES)	TRENCH WIDTH (INCHES)	NOMINAL PIPE SIZE (INCHES)	TRENCH WIDTH (INCHES)
4	28	20	44
6	30	24	48
8	32	30	54
10	34	36	60
12	36	42	66
14	38	48	72
16	40	54	78
18	42		

ANSI/AWWA C150/A21.50 and ANSI/AWWA C151/A21.51 Standard Laying Conditions

Laying Condition	Description
Type 1*	Flat-bottom trench.† Loose backfill.
Type 2	Flat-bottom trench.† Backfill lightly consolidated to centerline of pipe.
Type 3	Pipe bedded in 4" minimum loose soil.†† Backfill lightly consolidated to top of pipe.
Type 4	Pipe bedded in sand, gravel or crushed stone to depth of ¼ pipe diameter, 4" minimum. Backfill compacted to top of pipe. (95% Standard Proctor, AASHTO T-99.)
Type 5	Pipe bedded to its centerline in compacted granular§ material, 4" minimum under pipe. Compacted granular or select material†† to top of pipe. (95% Standard Proctor, AASHTO T-99.)

*For 14" and larger pipe, consideration should be given to the use of laying conditions other than Type 1.
† "Flat-bottom" is defined as undisturbed earth.
†† "Loose soil" or "select material" is defined as native soil excavated from the trench, free of rocks, foreign material and frozen earth.
§ Granular materials are defined per the AASHTO Soil Classification System (ASTM D3282) or the Unified Soil Classification System (ASTM D2487), with the exception that gravel bedding/backfill adjacent to the pipe is limited to 2" maximum particle size per ANSI/AWWA C600.