PROJ. REFERENCE NO.	SHEET NO.
U-2579B	PMP-1A

FINAL PAVEMENT MARKING SCHEDULE

MATERIAL	SYMBOL	DESCRIPTION
PAVEMENT MARKING		
POLYUREA (4") - WITH HIGHLY REFLECTIVE ELEMENTS		
	VA	WHITE EDGELINE
	VI	DOUBLE YELLOW CENTERLINE
POLYUREA (6") - WITH HIGHLY REFLECTIVE ELEMENTS		
	V6	WHITE EDGELINE
	V7	YELLOW EDGELINE
	V11	2 FT - 6FT WHITE MINISKIP
	V12	2 FT - 6FT YELLOW MINISKIP
	V16	DOUBLE YELLOW CENTERLINE
	VJ	10 FT WHITE SKIP
	VK	3 FT - 9 FT WHITE MINISKIP
	VL	WHITE SOLID LANE LINE
POLYUREA (12") - WITH HIGHLY REFLECTIVE ELEMENTS		
	VS	WHITE GORE LINE
	VT	WHITE SOLID LANE LINE - WIDE
THERMOPLASTIC (24", 120 MILS)		
	T2	WHITE STOP BAR
PAINT (12")		
	PU	WHITE DIAGONAL
	PV	YELLOW DIAGONAL
THERMOPLASTIC SYMBOL (90 MILS)		
	UA	LEFT TURN ARROW
	UB	RIGHT TURN ARROW
	UC	STRAIGHT ARROW
	UE	STRAIGHT/RIGHT ARROW
	UP	MERGE ARROW
THERMOPLASTIC CHARACTERS(120 MILS)		
	UI	CHARACTERS
PERMANENT RAISED PAVEMENT MARKERS		
	MA	YELLOW & YELLOW
	MB	CRYSTAL & RED
SNOWPLOWABLE RAISED PAVEMENT MARKERS		
	MF	CRYSTAL & RED

LEGEND

GENERAL

DIRECTION OF TRAFFIC FLOW

NORTH ARROW

PROPOSED PVMT. ---------- EXIST. PVMT.

PAVEMENT MARKINGS

PAVEMENT MARKING SYMBOLS

TUBULAR MARKER

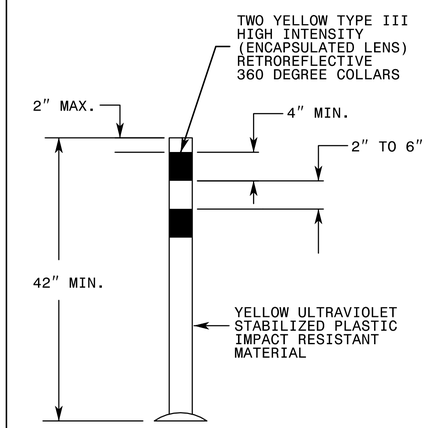

HNTB
HNTB NORTH CAROLINA, P.C.
343 E. Six Forks Road, Suite 200
Raleigh, North Carolina 27609
NC License No: C-1554

APPROVED: DocuSigned by: Rhonda B. Early DATE: 7/29/2014

SEAL

NORTH CAROLINA PROFESSIONAL SEAL 023521 ENGINEER RHONDA B. EARLY

STATE OF NORTH CAROLINA DEPARTMENT OF TRANSPORTATION

FINAL PAVEMENT MARKING PLANS

8/17/99

REVISIONS

QA/QC STAGE:

REVIEW:

CONCUR:

REVISE:

VERIFY:

3:46:32 PM
:\PMP\U-2579B_pmp_01.dgn
$$$$USERNAME$$$$