ICA Engineering
3121 Kingdom Way, Suite 100
Raleigh, NC 27607
NC License No: F-1024

PROJ. REFERENCE NO.	SHEET NO.
U-2579B	TMP-24

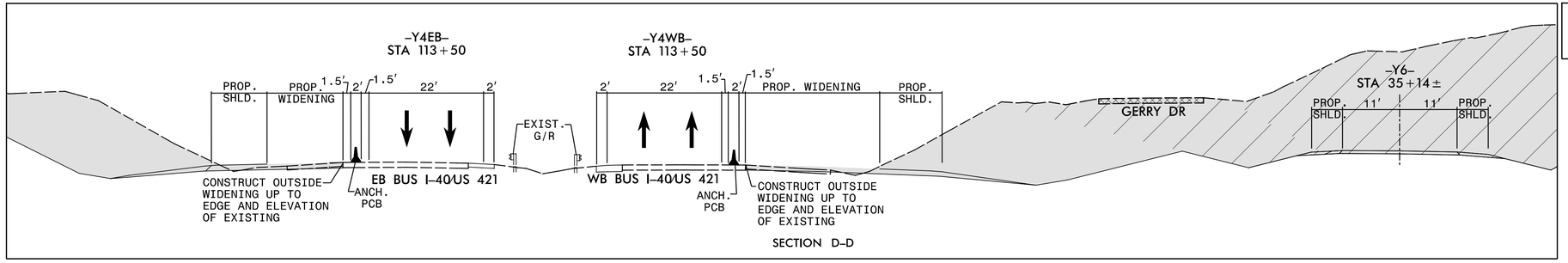

SECTION D-D

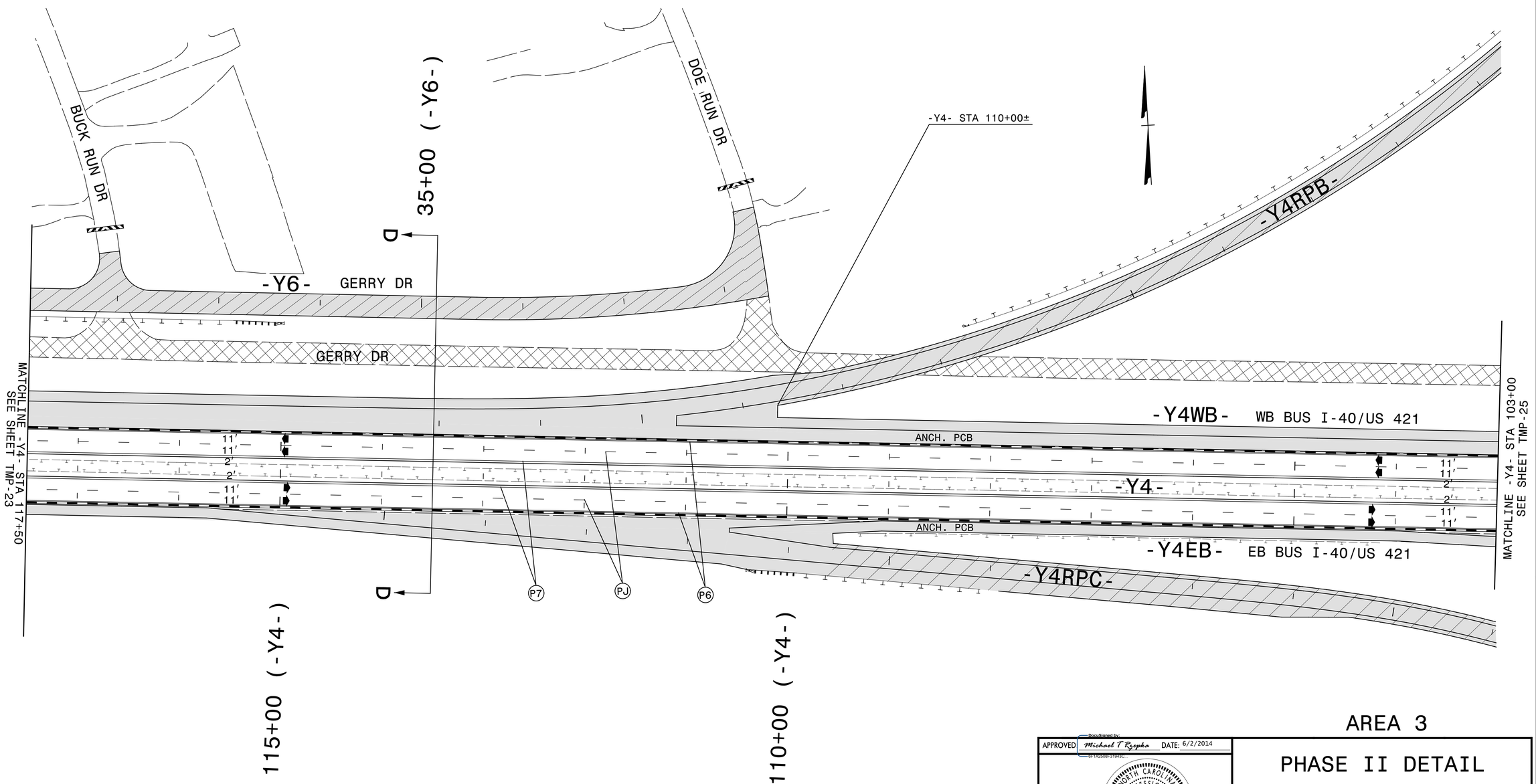

AREA 3

APPROVED DocuSigned by: Michael T Rzepka DATE: 6/2/2014
EF1A2D08F-319A3C...

SEAL

NORTH CAROLINA PROFESSIONAL SEAL 15876 ENGINEER MICHAEL T. RZEPKA

PHASE II DETAIL

SCALE:	NONE
DATE:	MAY 2014
DWG. BY:	YTM
DESIGN BY:	ACP
REVIEWED BY:	MTR

DIVISION OF HIGHWAYS
DEPARTMENT OF TRANSPORTATION
STATE OF NORTH CAROLINA
TRANSPORTATION MANAGEMENT UNIT
TRAFFIC CONTROL

REVISIONS

CADD FILE

R:\tmp\u2579b_tmp_y4_p11_dt1_02.dgn
6/1/2014 7:34:26 PM