STRUCTURE TYPICAL SECTIONS

PROJECT REFERENCE NO.	SHEET NO.
U-2579B	2A-23
R/W SHEET NO.	

ROADWAY DESIGN ENGINEER

NORTH CAROLINA PROFESSIONAL SEAL 18494 ENGINEER ANTHONY AARON HOUSER

DocuSigned by: Anthony Houser 8/11/2014

–Y5– STRUCTURE

–Y5– (HASTING HILLS ROAD) OVER –Y4RPD–

12

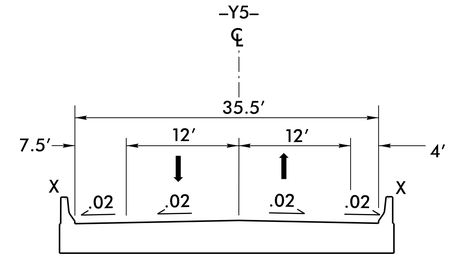

TYPICAL SECTION ON STRUCTURE

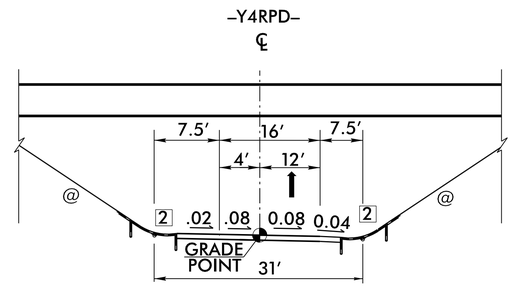

TYPICAL SECTION ON ROADWAY UNDER STRUCTURE

DESIGN DATA –Y5–

2010 ADT 7,600
2030 ADT 13,600
DHV = 11
D = 60
DUAL = 2
TTST = 1
V = 50 MPH
FUNC CLASS – URBAN COLLECTOR
MINIMUM VERTICAL CLEARANCE = 16′–6″

X BRIDGE RAIL TO BE DETERMINED BY STRUCTURE DESIGN UNIT

@ SLOPES DETERMINED BY GEOTECTNICAL ENGINEERING UNIT

2 SEE STD. 610.03

NOTES:
1. SEE SHEET 2B–4 FOR BRIDGE SKETCH
2. SEE SHEET 16 FOR PLAN VIEW
3. SEE SHEET 2A–13 FOR –Y5– TYPICAL SECTION
4. SEE SHEET 2A–11 FOR –Y4RPD– TYPICAL SECTION

–Y5– STRUCTURE

–Y5– (HASTING HILL ROAD) OVER –Y4CD–, –L– (WINSTON–SALEM NORTHERN BELTWAY) , & –Y4RPC–

13

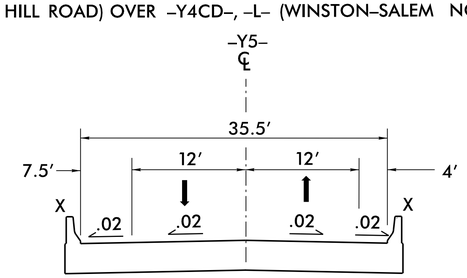

TYPICAL SECTION ON STRUCTURE

DESIGN DATA –Y5–

2010 ADT 7,600
2030 ADT 13,600
DHV = 11
D = 60
DUAL = 2
TTST = 1
V = 50 MPH
FUNC CLASS – URBAN COLLECTOR
MINIMUM VERTICAL CLEARANCE = 16′–6″

X BRIDGE RAIL TO BE DETERMINED BY STRUCTURE DESIGN UNIT

@ SLOPES DETERMINED BY GEOTECTNICAL ENGINEERING UNIT

2 SEE STD. 610.03

NOTES:
1. SEE SHEET 2B–4 FOR BRIDGE SKETCH
2. SEE SHEET 16 FOR PLAN VIEW
3. SEE SHEET 2A–13 FOR –Y5– TYPICAL SECTION
4. SEE SHEET 2A–12 FOR –Y4CD– & Y4RPC TYPICAL SECTION
5. SEE SHEET 2A–1 FOR –L– TYPICAL SECTION

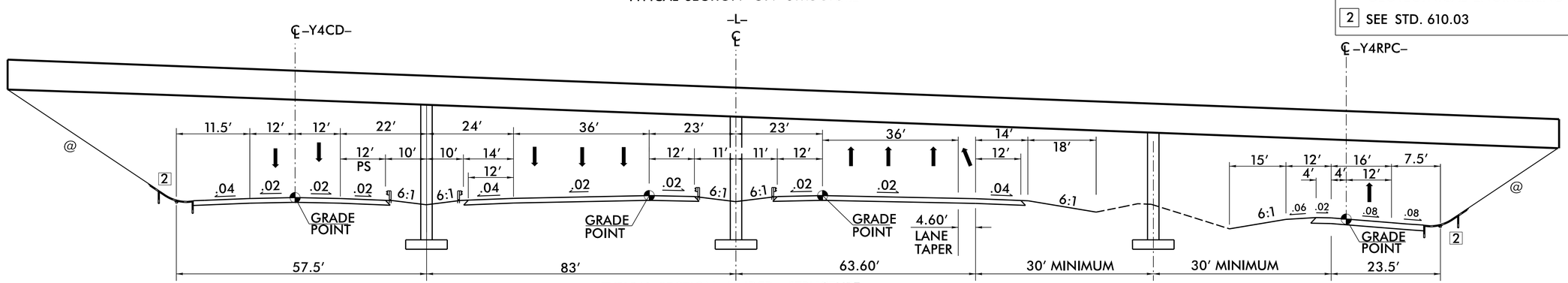

TYPICAL SECTION UNDER STRUCTURE

REVISIONS

5282014
\\U2579_rdy_str_rec.dgn
11:24:50 AM