PROJECT REFERENCE NO.	SHEET NO.
U-2579 B	2D-5

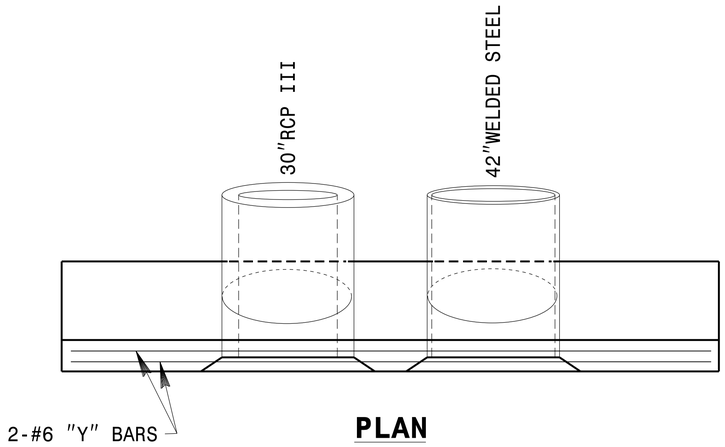

PLAN

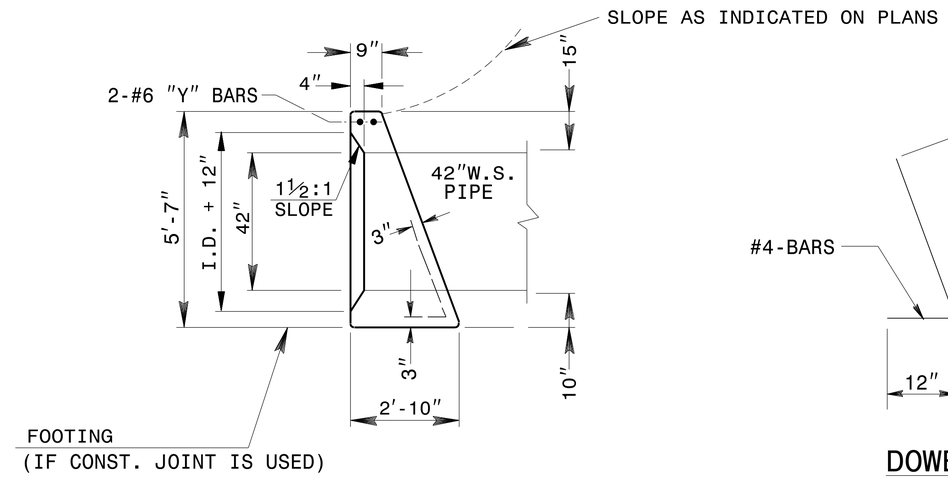

END ELEVATION

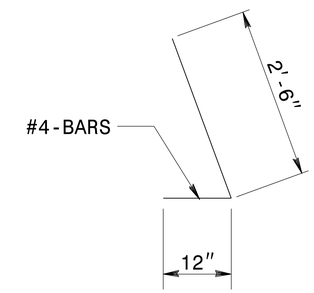

DOWEL
BAR-"X"

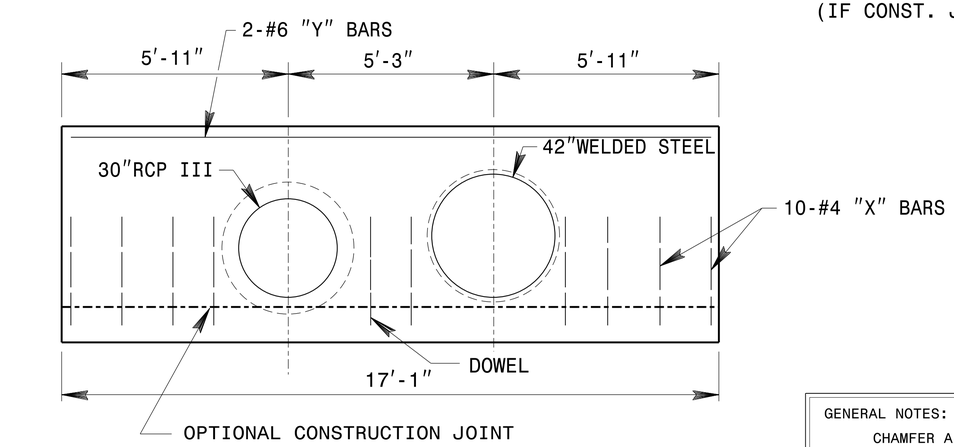

ELEVATION

GENERAL NOTES:

CHAMFER ALL CORNERS 1" OR HAVE A RADIUS OF 1".

PLACE 2 #6 "Y" BARS IN THE TOP OF ALL ENDWALL FOR PIPE CULVERTS 42" AND OVER WITH A MINIMUM OF 3" COVER AND A LENGTH OF 6" LESS THAN ENDWALL LENGTH.

CONSTRUCT BOTTOM SLAB WITH FORMS.

DO NOT INTERPRET WALL THICKNESS (T) SHOWN FOR THE THICKNESS ACCEPTABLE, BUT IS USED IN COMPUTING ENDWALL QUANTITIES.

WHEN THE CONTRACTOR ELECTS TO USE A CONSTRUCTION JOINT AT THE BOTTOM OF THE PIPE, PLACE BAR "X" DOWELS IN THE BASE AS SHOWN ON PLANS. SPACE BARS APPROXIMATELY ON 12" CENTERS UNLESS OTHERWISE DIRECTED BY THE ENGINEER.

WHEN THE CONTRACTOR ELECTS TO USE A CONSTRUCTION JOINT AT THE BOTTOM OF THE PIPE AND POUR THE BASE SEPARATELY LEAVE THE POUR ROUGH.

USE CLASS "B" CONCRETE.

BILL OF MATERIAL
REINFORCING STEEL

BAR	SIZE	LENGTH	NO.	WEIGHT
X	#4	3'-6"	10	24
Y	#6	16'-7"	2	50
REINF. STEEL LBS.				74
TOTAL CON./R.C. CU. YDS.				5

DocuSigned by: Joel Howerton
8/12/2014

NORTH CAROLINA PROFESSIONAL SEAL 022966 ENGINEER Joel S. Howerton

CONTRACT STANDARDS & DEVELOPMENT UNIT
STANDARDS AND SPECIAL DESIGN
Office 919-250-4128 FAX 919-250-4119

CONCRETE ENDWALL FOR DOUBLE PIPE CULVERTS

ORIGINAL BY: DATE:
MODIFIED BY: rnbritt DATE: 07-22-14
CHECKED BY: DATE:
FILE SPEC.: details/rnbritt/english/urban/u2579B conc ew dblpipe.dgn

5/14/99
$$$$SYSTIME$$$$
$$$$TIME$$$$
$$$$SUN$$$$
$$$$USERNAME$$$$