PROJECT REFERENCE NO.	SHEET NO.
U-2579B	2A-8
R/W SHEET NO.	

ROADWAY DESIGN ENGINEER

NORTH CAROLINA PROFESSIONAL SEAL 18494 ENGINEER ANTHONY AARON HOLSER

DocuSigned by: Anthony Holser 7/11/2014

PAVEMENT DESIGN ENGINEER

NORTH CAROLINA PROFESSIONAL SEAL 22896 ENGINEER CLARK S. MORRISON

DocuSigned by: Clark S. Morrison 7/3/2014

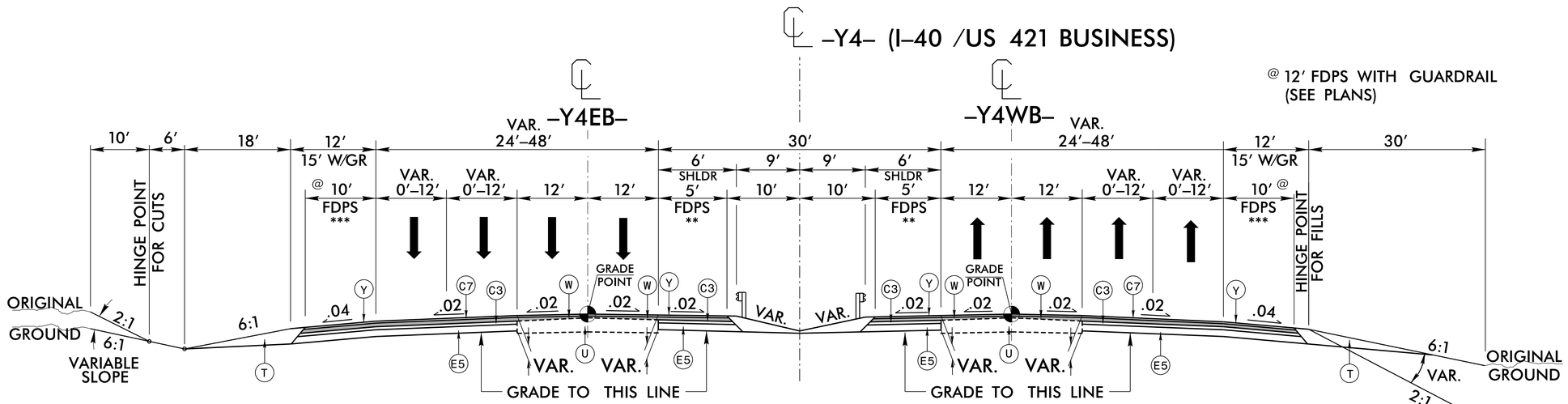

TYPICAL SECTION NO. 14

USE TYPICAL SECTION NO. 14:

–Y4– STA. 26+80.00 TO STA. 143+00.00
(–Y4EB– & –Y4WB–)

** EXISTING 4′ MEDIAN PAVED SHOULDER TO BE REMOVED AND REPLACED WITH 5′ PAVED SHOULDER (SEE TRANSPORTATION MANAGEMENT PLAN)

*** EXISTING 10′ OUTSIDE PAVED SHOULDER TO BE REMOVED AND REPLACED (SEE TRANSPORTATION MANAGEMENT PLAN)

EXISTING PAVED SHOULDERS TO BE REBUILT. WEDGING TO OCCUR AFTER SHOULDER RECONSTRUCTION, FOLLOWED BY APPLICATION OF THE FINAL SURFACE COURSE. SEE TRANSPORTATION MANAGEMENT PLAN FOR ADDITIONAL INFORMATION.

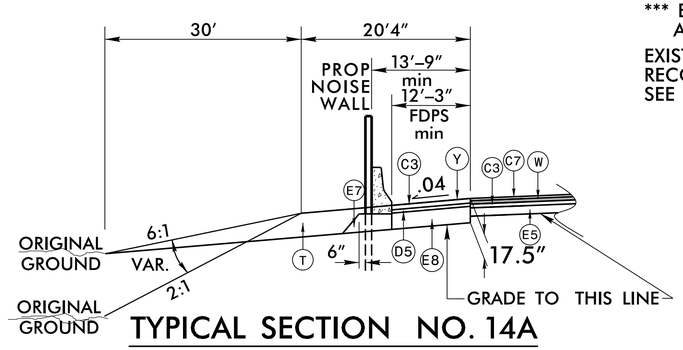

TYPICAL SECTION NO. 14A

USE TYPICAL SECTION NO. 14A:

–Y4EB– STA. 130+26.37 (BEG.) TO 143+00.00 (END) LT
(NOISEWALL –NWY42–)

A1	12.5″ DOWELED CONC.
A2	12.5″ UN-DOWELED
A3	6″ CONC.
C1	1.25″ SF9.5A
C2	3″ S9.5B
C3	3″ S9.5C
C4	VAR. S9.5B
C5	VAR. S9.5C
C6	1.5″ S9.5B
C7	1.5″ S9.5C
D1	2.5″ I19.0B
D2	2.5″ I19.0C
D3	3.0″ I19.0B
D4	4″ I19.0B
D5	4″ I19.0C
D6	VAR. I19.0B
D7	VAR. I19.0C
E1	3″ B25.0B
E2	4″ B25.0B
E3	3″ B25.0C
E4	5.5″ B25.0C
E5	7″ B25.0C
E6	VAR. B25.0B
E7	VAR. B25.0C
E8	10.5″ B25.0C
E9	7″ B25.0B
F	NONWOVEN GEOTEXTILE
J1	6″ ABC
J2	8″ ABC
J3	10″ ABC
J4	VAR. ABC
K	SUBGRADE STABIL.
N	GEOTEXTILE STABIL.
P	PRIME COAT
R1	1′-6″CONC. C&G
R2	2′-6″CONC. C&G
R3	5″MONO.CONC.ISLAND
R4	SHOULDER BERM GUTTER
T	EARTH MATERIAL.
U	EXISTING PAVEMENT.
W	WEDGING
Y	RUMBLE STRIPS

NOTE: SEE TIP PROJECT U–2579G
RESURFACE EXISTING (CONSTRUCTED UNDER TIP PROJECT U–2579G)
–Y4– STA 127+93.50 (BEGIN WALL) TO STA 130+26.37 (END WALL) LT.
–Y4– STA 129+53.10 (BEGIN WALL) TO STA 131+63.57 (END WALL) RT.

5/14/99

7/3/2014
pgs:19 kn:u2579b_rdy_typ.dgn