PROJECT REFERENCE NO.	SHEET NO.
U-2579B	2A-16
R/W SHEET NO.	

ROADWAY DESIGN ENGINEER

NORTH CAROLINA PROFESSIONAL SEAL 18494 ENGINEER ANTHONY AARON HOUSER

DocuSigned by: Anthony Houser 7/11/2014

PAVEMENT DESIGN ENGINEER

NORTH CAROLINA PROFESSIONAL SEAL 22896 ENGINEER CLARK S. MORRISON

DocuSigned by: Clark S. Morrison 7/13/2014

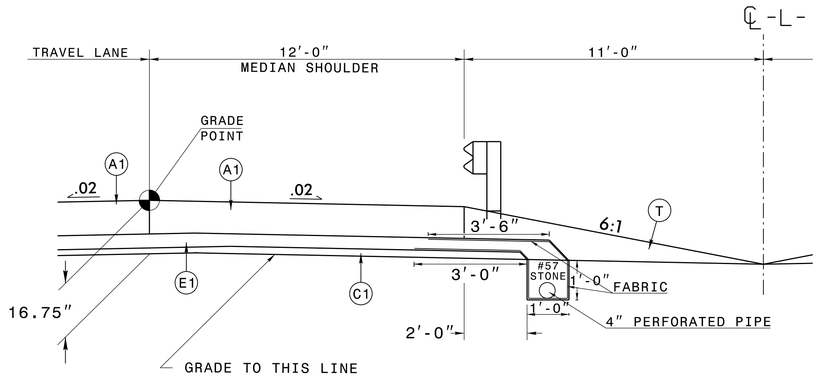

MEDIAN SHOULDER DRAIN WITH GUARDRAIL

RECOMMENDED LOCATIONS:

STA. 542+00 TO 555+45 (LT, MEDIAN)
OUTLETS: 545+65 (2GI), 548+53 +/- (2GI), 551+00 (2GI), 554+22 (2GI)

STA. 667+00 TO 679+00 (LT, MEDIAN)
OUTLETS: 669+65 (2GI), 672+00 (2GI), 673+22 +/- (2GI), 676+00 (2GI)

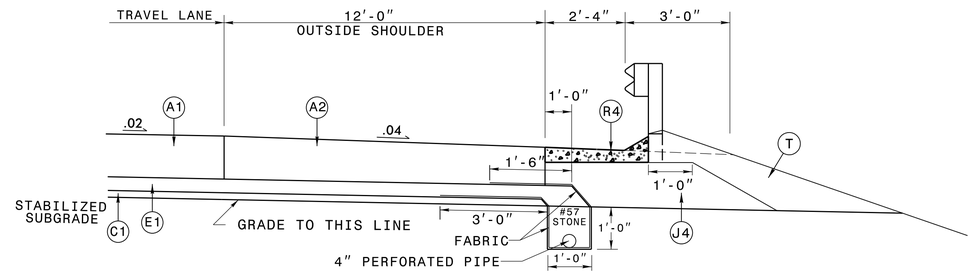

SHOULDER DRAIN WITH SHOULDER BERM GUTTER & GUARDRAIL DETAIL

RECOMMENDED LOCATIONS:

STA. 501+50 TO 510+00 (RT, OUTSIDE)
OUTLETS: 501+50 (2GI), 504+85 (2GI), 507+00 (2GI)

STA. 667+00 TO 679+00 (RT, OUTSIDE)
OUTLETS: 671+00, 673+22 +/-(2GI), 676+00 (2GI)

STA. 522+00 TO 528+49 (RT, OUTSIDE)
OUTLETS: 525+50 (2GI), 528+45, (2GI)

STA. 554+20 TO 555+45 (RT, OUTSIDE)
OUTLETS: 554+22 (2GI)

STA. 504+85 TO 510+37 (LT, OUTSIDE)
OUTLETS: 504+85 (2GI), 507+00 (2GI)

STA. 521+50 TO 528+75 (LT, OUTSIDE)
OUTLETS: 521+50, 525+50 (2GI), 528+75 (2GI)

A1	12.5" DOWELED CONC.
A2	12.5" UN-DOWELED
A3	6" CONC.
C1	1.25" SF9.5A
C2	3" S9.5B
C3	3" S9.5C
C4	VAR. S9.5B
C5	VAR. S9.5C
C6	1.5" S9.5B
C7	1.5" S9.5C
D1	2.5" I19.0B
D2	2.5" I19.0C
D3	3.0" I19.0B
D4	4" I19.0B
D5	4" I19.0C
D6	VAR. I19.0B
D7	VAR. I19.0C
E1	3" B25.0B
E2	4" B25.0B
E3	3" B25.0C
E4	5.5" B25.0C
E5	7" B25.0C
E6	VAR. B25.0B
E7	VAR. B25.0C
E8	10.5" B25.0C
E9	7" B25.0B
F	NONWOVEN GEOTEXTILE
J1	6" ABC
J2	8" ABC
J3	10" ABC
J4	VAR. ABC
K	SUBGRADE STABIL.
N	GEOTEXTILE STABIL.
P	PRIME COAT
R1	1'-6"CONC. C&G
R2	2'-6"CONC. C&G
R3	5"MONO.CONC.ISLAND
R4	SHOULDER BERM GUTTER
T	EARTH MATERIAL.
U	EXISTING PAVEMENT.
W	WEDGING
Y	RUMBLE STRIPS

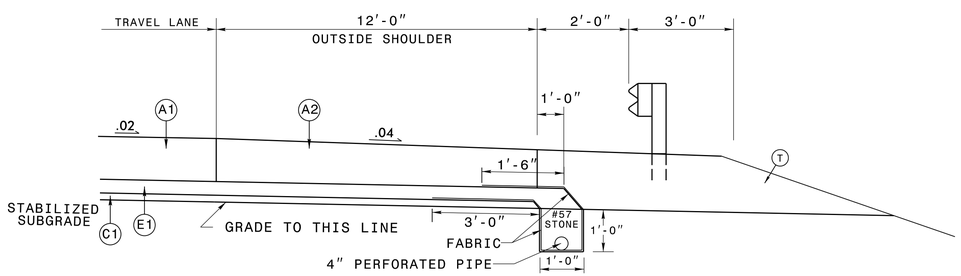

SHOULDER DRAIN WITH GUARDRAIL DETAIL

RECOMMENDED LOCATIONS:

STA. 478+20 TO 484+35 (RT, OUTSIDE)
OUTLETS: 478+20 (2GI), 483+00 (2GI)

STA. 617+00 TO 626+00 (RT, OUTSIDE)
OUTLETS: 620+78 +/- 623+00

STA. 552+62. TO 554+20 (RT, OUTSIDE)

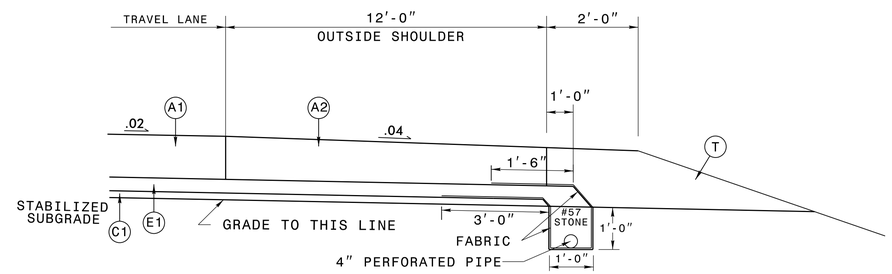

SHOULDER DRAIN DETAIL

RECOMMENDED LOCATIONS:

STA. 486+55 TO 498+42 (RT, OUTSIDE)
OUTLETS: 486+55 (2GI), 490+75 (2GI), 494+75

STA. 512+00 TO 522+00 (RT, OUTSIDE)
OUTLETS: 515+30 (2GI), 520+50 (2GI)

STA. 528+49 TO 552+62 (RT, OUTSIDE)
OUTLETS: 534+22 (2GI), 534+50 (2GI), 538+00 (2GI), 539+72 (2GI), 542+70 (2GI) 545+65 (2GI), 548+53+/- (2GI), 551+00 (2GI)

STA. 478+20 TO 485+60 (LT, OUTSIDE)
OUTLETS: 478+20 (2GI), 483+39 (2GI)

STA. 487+50 TO 495+00 (LT, OUTSIDE)
OUTLETS: 487+50 (2GI), 490+75 (2GI)

STA. 510+37 TO 521+50 (LT, OUTSIDE)
OUTLETS: 513+00 , 516+00 (2GI), 520+00 (2GI), 521+50

STA. 528+75 TO 542+70 (LT, OUTSIDE)
OUTLETS: 528+75 (2GI), 534+50 (2GI), 539+72 (2GI), 542+70 (2GI)

STA. 617+00 TO 626+80 (LT, OUTSIDE)
OUTLETS: 620+75 +/- (3GI), 623+47 (2GI)

5/14/99

7/3/2014
9:43:24 AM
U:\pro\u2579b_rdy_typ.dgn