PROJECT REFERENCE NO.	SHEET NO.
U-2579B	2A-12
R/W SHEET NO.	
ROADWAY DESIGN ENGINEER	PAVEMENT DESIGN ENGINEER

NORTH CAROLINA PROFESSIONAL SEAL 18494 ENGINEER ANTHONY AARON HOWELL
DocuSigned by: Anthony Howell 7/11/2014
SF7D7DCEE8C364EB...

NORTH CAROLINA PROFESSIONAL SEAL 22896 ENGINEER CLARK S. MORRISON
DocuSigned by: Clark S. Morrison 7/13/2014
B0A110DD1E0D4C4...

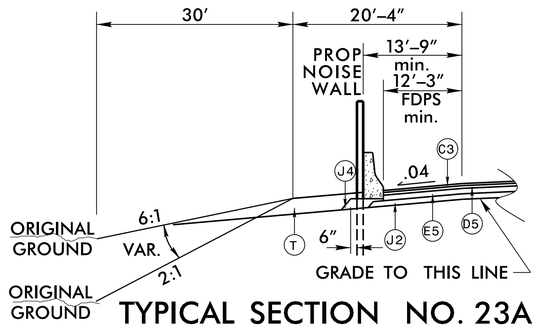

TYPICAL SECTION NO. 23A

USE TYPICAL SECTION NO. 23A:

–Y4RPC– STA. 31+09.00 TO 33+89.86 LT (NOISEWALL –NWY41–)

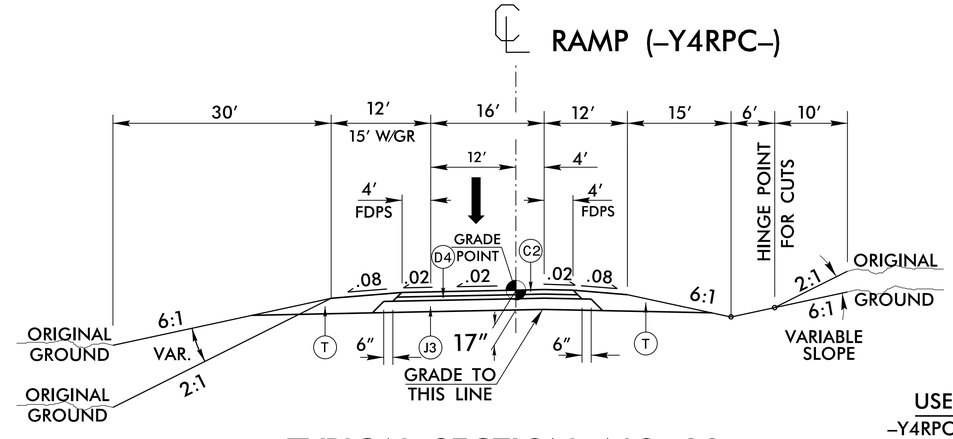

TYPICAL SECTION NO. 23

USE TYPICAL SECTION NO. 23:

–Y4RPC– STA. 13+88.00 TO 35+56.52

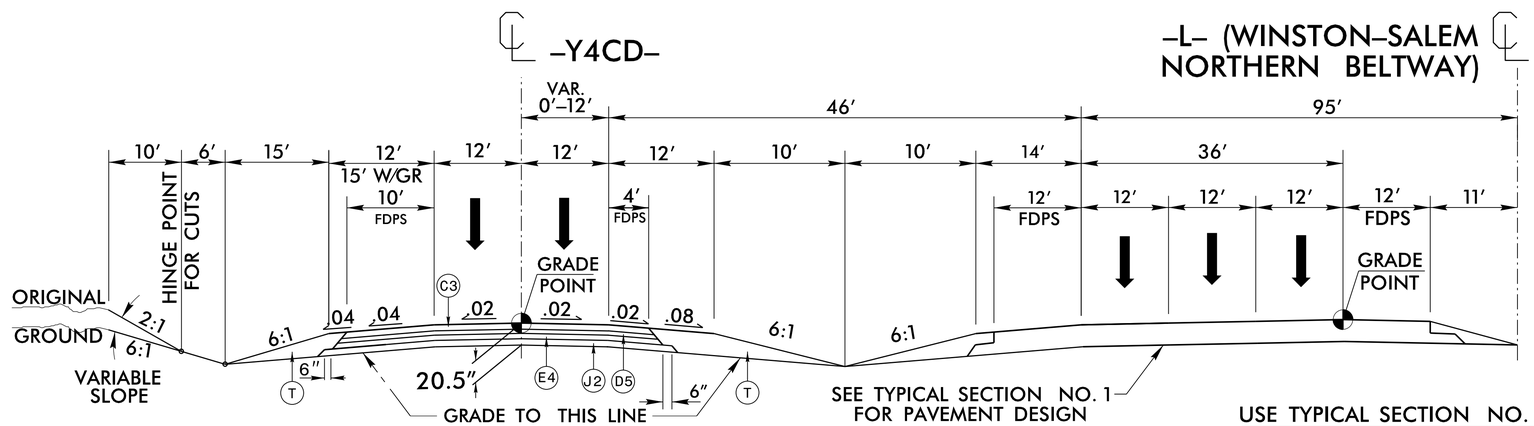

TYPICAL SECTION NO. 24

USE TYPICAL SECTION NO. 24:

–Y4CD– STA. 19+22.07 TO STA. 31+61.71+/– (BEG. BR.)
–Y4CD– STA. 34+71.26+/– (END BR.) TO STA. 45+75.19+/– (BEG. BR.)
–Y4CD– STA. 47+91.69+/– (END BR.) TO STA. 85+65.67

* PAVE TO FACE OF GUARDRAIL

A1	12.5″ DOWELED CONC.
A2	12.5″ UN-DOWELED
A3	6″ CONC.
C1	1.25″ SF9.5A
C2	3″ S9.5B
C3	3″ S9.5C
C4	VAR. S9.5B
C5	VAR. S9.5C
C6	1.5″ S9.5B
C7	1.5″ S9.5C
D1	2.5″ I19.0B
D2	2.5″ I19.0C
D3	3.0″ I19.0B
D4	4″ I19.0B
D5	4″ I19.0C
D6	VAR. I19.0B
D7	VAR. I19.0C
E1	3″ B25.0B
E2	4″ B25.0B
E3	3″ B25.0C
E4	5.5″ B25.0C
E5	7″ B25.0C
E6	VAR. B25.0B
E7	VAR. B25.0C
E8	10.5″ B25.0C
E9	7″ B25.0B
F	NONWOVEN GEOTEXTILE
J1	6″ ABC
J2	8″ ABC
J3	10″ ABC
J4	VAR. ABC
K	SUBGRADE STABIL.
N	GEOTEXTILE STABIL.
P	PRIME COAT
R1	1′-6″CONC. C&G
R2	2′-6″CONC. C&G
R3	5″MONO.CONC.ISLAND
R4	SHOULDER BERM GUTTER
T	EARTH MATERIAL.
U	EXISTING PAVEMENT.
W	WEDGING
Y	RUMBLE STRIPS

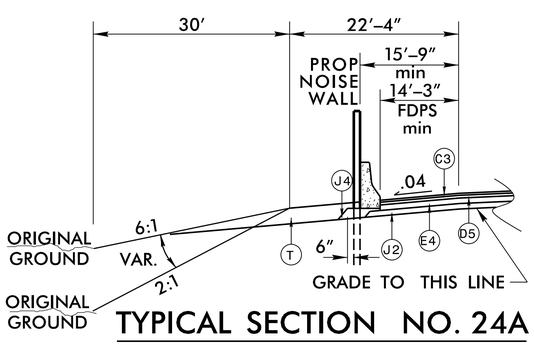

TYPICAL SECTION NO. 24A

USE TYPICAL SECTION NO. 24A:

–Y4CD– STA. 19+22.07 TO 30+55.29 LT (13+73.64 –Y4RPA–)
(NOISEWALL –NWL3–)

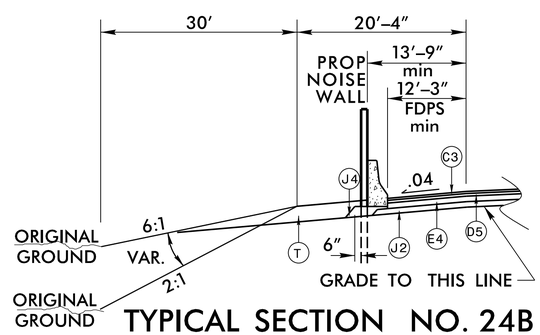

TYPICAL SECTION NO. 24B

USE TYPICAL SECTION NO. 24B:

–Y4CD– STA. 67+87.59 TO 73+82.21 LT (NOISEWALL –NWCD2–)

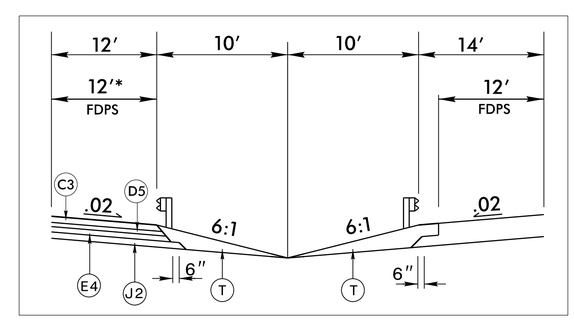

USE IN CONJUNCTION WITH T.S. NO. 24
FOR –Y4CD– MEDIAN GUARDRAIL LOCATIONS

5/14/99

7/31/2014
9:49:22 AM u2579b_rdy_typ.dgn