REVISIONS

5/28/2014
...\u2579_rdy_str_rec.dgn
11:25:28 AM

STRUCTURE TYPICAL SECTIONS

–Y4RPA– STRUCTURE

–Y4RPA– OVER SMITH CREEK

5

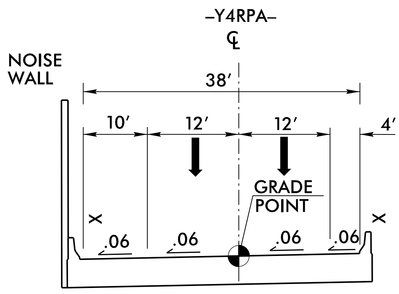

TYPICAL SECTION ON STRUCTURE

DESIGN DATA –Y4RPA–
2010 ADT 32,600
2030 ADT 43,800
DHV = 10
D = 60
DUAL = 5
TTST = 6
V = 60 MPH
FUNC CLASS – INTERSTATE
× BRIDGE RAIL TO BE DETERMINED BY STRUCTURE DESIGN UNIT

NOTES:
1. SEE SHEET 2B–2 FOR BRIDGE SKETCH
2. SEE SHEET 15 FOR PLAN VIEW
3. SEE SHEET 2A–10 FOR –Y4RPA– TYPICAL SECTION
4. BRIDGE LENGTH DETERMINED BY THE HYDRAULICS UNIT.

DESIGN DATA –Y4CD–
2010 ADT 6,600
2030 ADT 11,800
DHV = 10
D = 60
DUAL = 6
TTST = 12
V = 60 MPH
FUNC CLASS – INTERSTATE
× BRIDGE RAIL TO BE DETERMINED BY STRUCTURE DESIGN UNIT

6

DESIGN DATA –L–
2010 ADT 53,560
2030 ADT 79,880
DHV = 10
D = 60
DUAL = 6
TTST = 12
V = 70 MPH
FUNC CLASS – INTERSTATE
× BRIDGE RAIL TO BE DETERMINED BY STRUCTURE DESIGN UNIT

–Y4CD– STRUCTURE

–Y4CD– OVER SMITH CREEK

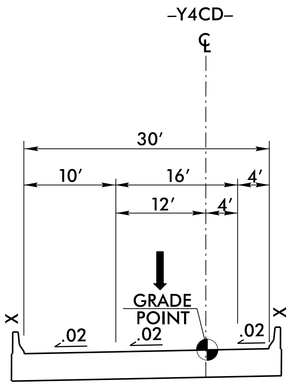

TYPICAL SECTION ON STRUCTURE

–L– DUAL STRUCTURES

–L– (WINSTON–SALEM NORTHERN BELTWAY) OVER SMITH CREEK

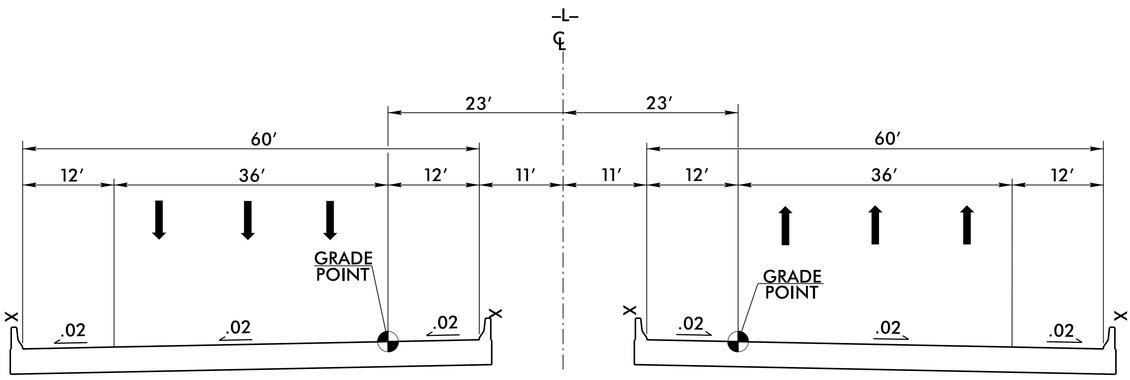

TYPICAL SECTION ON STRUCTURE

1. SEE SHEET 2B–2 FOR BRIDGE SKETCH
2. SEE SHEET 15 FOR PLAN VIEW
3. SEE SHEET 2A–1 FOR –L– TYPICAL SECTION
4. SEE SHEET 2A–12 FOR –Y4CD– TYPICAL SECTION
5. BRIDGE LENGTH DETERMINED BY THE HYDRAULICS UNIT.

–Y4RPBD– STRUCTURE

–Y4RPBD– OVER SMITH CREEK

7

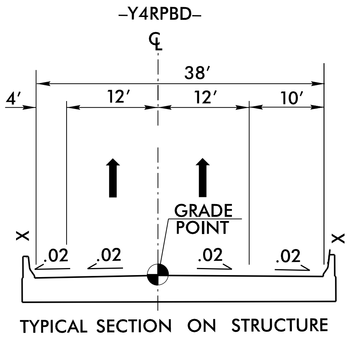

TYPICAL SECTION ON STRUCTURE

DESIGN DATA –Y4RPBD–
2010 ADT 32,600
2030 ADT 43,800
DHV = 10
D = 60
DUAL = 6
TTST = 12
V = 70 MPH
FUNC CLASS – INTERSTATE
× BRIDGE RAIL TO BE DETERMINED BY STRUCTURE DESIGN UNIT

NOTES:
1. SEE SHEET 2B–3 FOR BRIDGE SKETCH
2. SEE SHEET 15 FOR PLAN VIEW
3. SEE SHEET 2A–10 FOR –Y4RPBD– TYPICAL SECTION
4. BRIDGE LENGTH DETERMINED BY THE HYDRAULICS UNIT.

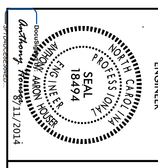

ROADWAY DESIGN ENGINEER

R/W SHEET NO.

PROJECT REFERENCE NO. U-2579B

SHEET NO. 2A-20