REVISIONS

5/28/2014
...\u2579_rdy_str_rec.dgn
11:25:13 AM

STRUCTURE TYPICAL SECTIONS

–Y1– STRUCTURE

–Y1– (US 158 REIDSVILLE ROAD) OVER –L– (WINSTON–SALEM – NORTHERN BELTWAY)

1

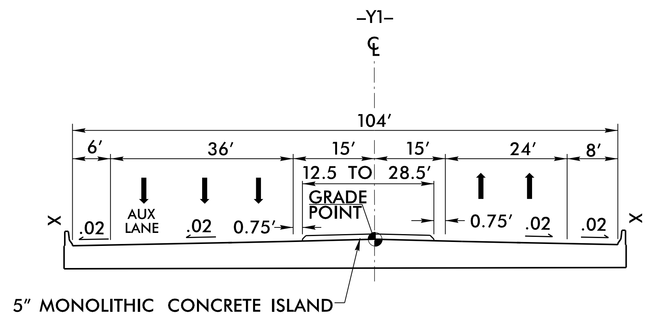

TYPICAL SECTION ON STRUCTURE

DESIGN DATA –Y1–

2010 ADT 17,480
2030 ADT 26,440
DHV = 10
D = 60
DUAL = 3
TTST = 5
V = 50 MPH
FUNC CLASS – ARTERIAL
MINIMUM VERTICAL CLEARANCE = 16′–6″

× BRIDGE RAIL TO BE DETERMINED BY STRUCTURE DESIGN UNIT

@ SLOPES DETERMINED BY GEOTECTNICAL ENGINEERING UNIT

[2] SEE STD. 610.03

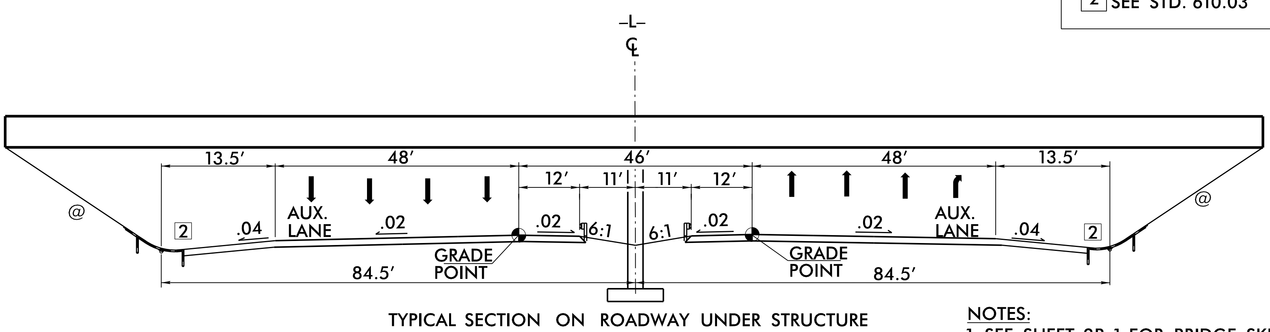

TYPICAL SECTION ON ROADWAY UNDER STRUCTURE

NOTES:
1. SEE SHEET 2B–1 FOR BRIDGE SKETCH
2. SEE SHEET 5 FOR PLAN VIEW
3. SEE SHEET 2A–1 FOR –L– TYPICAL SECTION
4. SEE SHEETS 2A–2 & 2A–3 FOR –Y1– TYPICAL SECTIONS

–Y2– STRUCTURE

–Y2– (WALKERTOWN–GUTHRIE RD) OVER –L– (WINSTON–SALEM – NORTHERN BELTWAY)

2

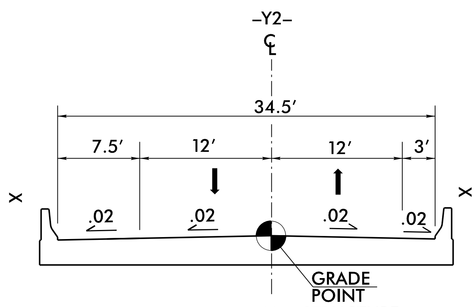

TYPICAL SECTION ON STRUCTURE

DESIGN DATA –Y2–

2010 ADT 4960
2030 ADT 6880
DHV = 10
D = 60
DUAL = 2
TTST = 1
V = 50 MPH
FUNC CLASS – MINOR RURAL COLLECTOR
MINIMUM VERTICAL CLEARANCE = 16′–6″

× BRIDGE RAIL TO BE DETERMINED BY STRUCTURE DESIGN UNIT

@ SLOPES DETERMINED BY GEOTECTNICAL ENGINEERING UNIT

[2] SEE STD. 610.03

* FUTURE AUX. LANE FOR FUTURE I–73 / I–74 CONNECTOR PROJECT

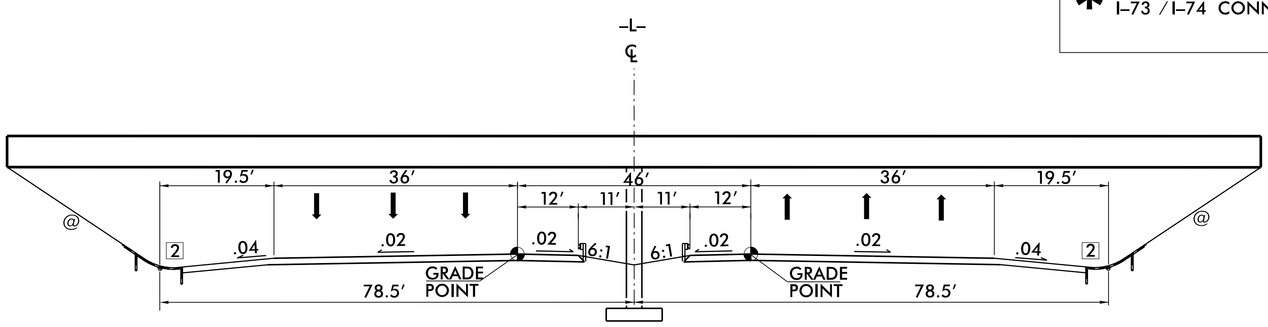

TYPICAL SECTION ON ROADWAY UNDER STRUCTURE

1. SEE SHEET 2B–1 FOR BRIDGE SKETCH
2. SEE SHEET 7 FOR PLAN VIEW
3. SEE SHEET 2A–1 FOR –L– TYPICAL SECTION
4. SEE SHEET 2A–6 FOR –Y2– TYPICAL SECTION

NORTH CAROLINA PROFESSIONAL SEAL 18494 ENGINEER
DOCUMENT NOT CONSIDERED A CONTRACT
Anthony Hayes
5/27/2014

ROADWAY DESIGN ENGINEER

R/W SHEET NO.

PROJECT REFERENCE NO. U-2579B

SHEET NO. 2A-18