PROJECT REFERENCE NO.	SHEET NO.
U-2579B	2A-13
R/W SHEET NO.	
ROADWAY DESIGN ENGINEER	PAVEMENT DESIGN ENGINEER

NORTH CAROLINA PROFESSIONAL SEAL 18494 ENGINEER ANTHONY AARON HOUSER
DocuSigned by: Anthony Houser 7/11/2014
5F7D7D0CE8E364EB...

NORTH CAROLINA PROFESSIONAL SEAL 22896 ENGINEER CLARK S. HARRISON
DocuSigned by: Clark S. Harrison 7/13/2014
B0A110DDTE0DRC4...

–Y5– (HASTINGS HILL RD)

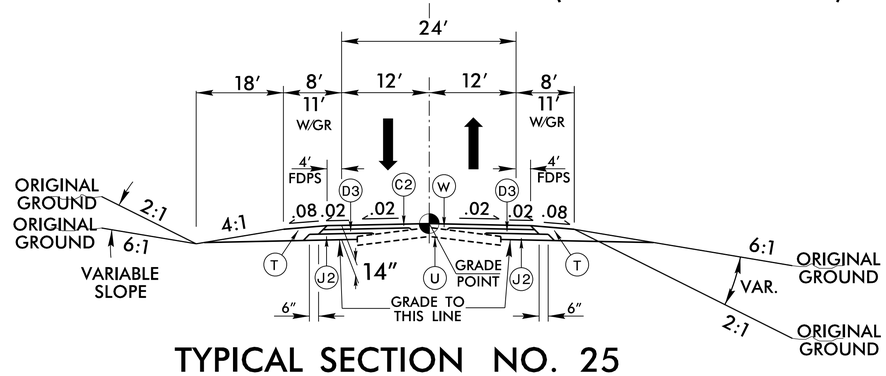

TYPICAL SECTION NO. 25

USE TYPICAL SECTION NO. 25:

–Y5– STA. 16+00.00 TO 17+50.00
–Y5– STA. 32+00.00 TO 33+30.00

–Y5– (HASTINGS HILL RD)

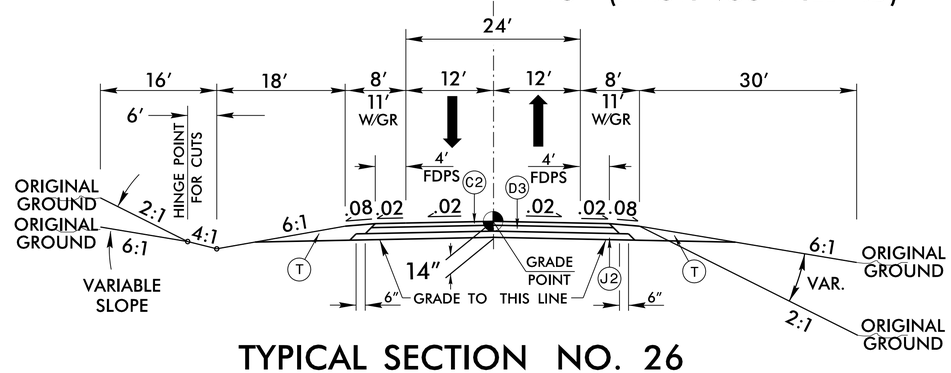

TYPICAL SECTION NO. 26

USE TYPICAL SECTION NO. 26:

–Y5– STA. 17+50.00 TO 22+94.62 +/– (BEG. BR.)
–Y5– STA 24+13.87 +/– (END BR.) TO 26+69.08 +/– (BEG. BR.)
–Y5– STA. 30+82.62 +/– (END BR.) TO 32+00.00

–Y5DET– (HASTINGS HILL RD DETOUR)

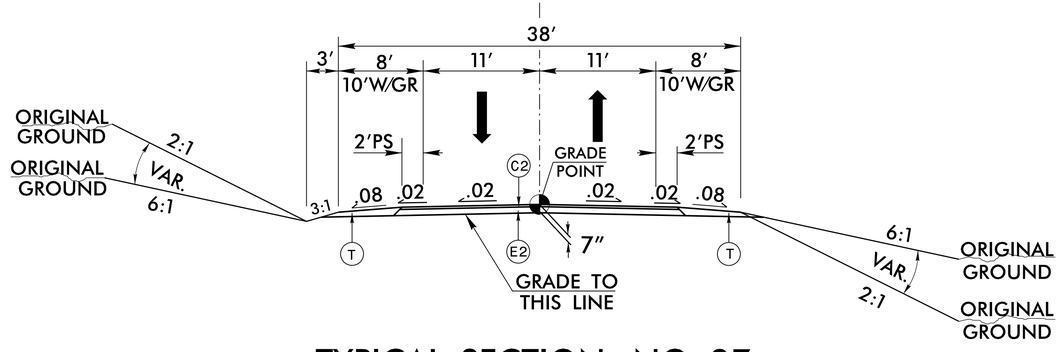

TYPICAL SECTION NO. 27

USE TYPICAL SECTION NO. 27:

–Y5DET.– STA. 10+00.00 TO 32+32.54

A1	12.5″ DOWELED CONC.
A2	12.5″ UN-DOWELED
A3	6″ CONC.
C1	1.25″ SF9.5A
C2	3″ S9.5B
C3	3″ S9.5C
C4	VAR. S9.5B
C5	VAR. S9.5C
C6	1.5″ S9.5B
C7	1.5″ S9.5C
D1	2.5″ I19.0B
D2	2.5″ I19.0C
D3	3.0″ I19.0B
D4	4″ I19.0B
D5	4″ I19.0C
D6	VAR. I19.0B
D7	VAR. I19.0C
E1	3″ B25.0B
E2	4″ B25.0B
E3	3″ B25.0C
E4	5.5″ B25.0C
E5	7″ B25.0C
E6	VAR. B25.0B
E7	VAR. B25.0C
E8	10.5″ B25.0C
E9	7″ B25.0B
F	NONWOVEN GEOTEXTILE
J1	6″ ABC
J2	8″ ABC
J3	10″ ABC
J4	VAR. ABC
K	SUBGRADE STABIL.
N	GEOTEXTILE STABIL.
P	PRIME COAT
R1	1′-6″CONC. C&G
R2	2′-6″CONC. C&G
R3	5″MONO.CONC.ISLAND
R4	SHOULDER BERM GUTTER
T	EARTH MATERIAL.
U	EXISTING PAVEMENT.
W	WEDGING
Y	RUMBLE STRIPS

5/14/99

7/31/2014
J:\6201\u2579b_rdy_typ.dgn
9:48:23 AM