PROJECT REFERENCE NO.	SHEET NO.
U-2579B	2A-4
R/W SHEET NO.	
ROADWAY DESIGN ENGINEER	PAVEMENT DESIGN ENGINEER

NORTH CAROLINA PROFESSIONAL SEAL 18494 ENGINEER ANTHONY AARON HOLDER
DocuSigned by: Anthony Holder 8/11/2014

NORTH CAROLINA PROFESSIONAL SEAL 22896 ENGINEER CLARK S. FRANKLIN CORRIHER
DocuSigned by: Clark S. Franklin Corriher 8/13/2014

LOOP (–Y1LPA–, –Y1LPD–)

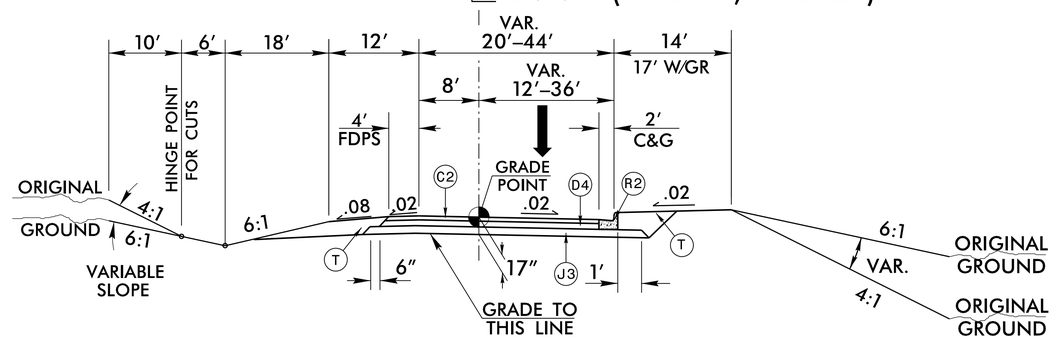

TYPICAL SECTION NO. 6

USE TYPICAL SECTION NO. 6:

–Y1LPA– STA. 12+31.88 TO 20+37.67
–Y1LPD– STA. 12+31.88 TO 21+09.84

RAMP (–Y1RPA–, –Y1RPD–)

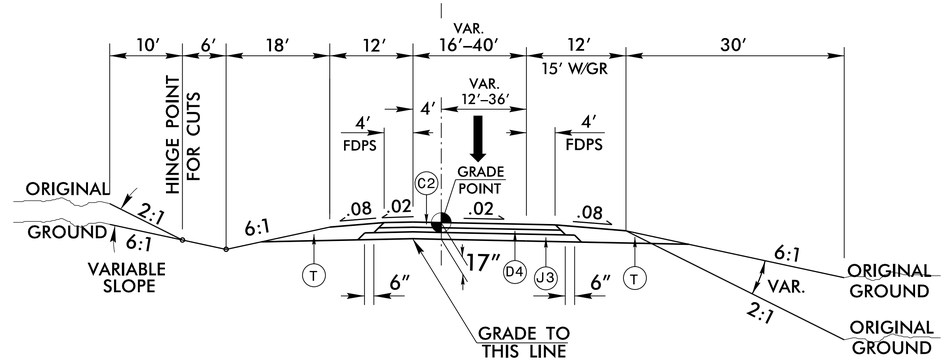

TYPICAL SECTION NO. 7

USE TYPICAL SECTION NO. 7:

–Y1RPA– STA. 14+53.46 TO 29+63.93
–Y1RPD– STA. 14+53.92 TO 31+70.50

A1	12.5″ DOWELED CONC.
A2	12.5″ UN-DOWELED
A3	6″ CONC.
C1	1.25″ SF9.5A
C2	3″ S9.5B
C3	3″ S9.5C
C4	VAR. S9.5B
C5	VAR. S9.5C
C6	1.5″ S9.5B
C7	1.5″ S9.5C
D1	2.5″ I19.0B
D2	2.5″ I19.0C
D3	3.0″ I19.0B
D4	4″ I19.0B
D5	4″ I19.0C
D6	VAR. I19.0B
D7	VAR. I19.0C
E1	3″ B25.0B
E2	4″ B25.0B
E3	3″ B25.0C
E4	5.5″ B25.0C
E5	7″ B25.0C
E6	VAR. B25.0B
E7	VAR. B25.0C
E8	10.5″ B25.0C
E9	7″ B25.0B
F	NONWOVEN GEOTEXTILE
J1	6″ ABC
J2	8″ ABC
J3	10″ ABC
J4	VAR. ABC
K	SUBGRADE STABIL.
N	GEOTEXTILE STABIL.
P	PRIME COAT
R1	1′-6″CONC. C&G
R2	2′-6″CONC. C&G
R3	5″MONO.CONC.ISLAND
R4	SHOULDER BERM GUTTER
T	EARTH MATERIAL.
U	EXISTING PAVEMENT.
W	WEDGING
Y	RUMBLE STRIPS

5/14/99

7/31/2014
R:\Roadway\u2579b_rdy_typ.dgn
9:43:17 AM