PROJECT REFERENCE NO.	SHEET NO.
U-2579B	2A-3
R/W SHEET NO.	
ROADWAY DESIGN ENGINEER	PAVEMENT DESIGN ENGINEER

NORTH CAROLINA PROFESSIONAL SEAL 18494 ENGINEER ANTHONY AARON HOSEY — Anthony Hosey 8/11/2014
NORTH CAROLINA PROFESSIONAL SEAL 22896 ENGINEER CLARK S. PRESSLER — Clark S. Pressler 8/13/2014

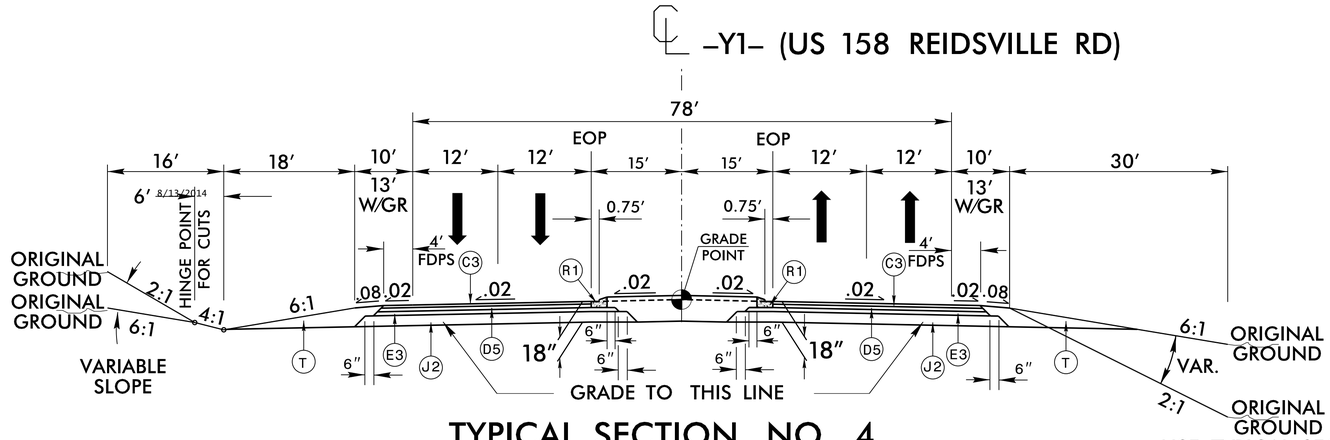

TYPICAL SECTION NO. 4

USE TYPICAL SECTION NO. 4:
–Y1– STA. 21+71.59 TO STA. 32+91.80+/– (BEG. BR.)
–Y1– STA. 39+57.26 TO STA. 42+25.00

INSET FOR LEFT TURN –Y1– (US 158 REIDSVILLE RD)

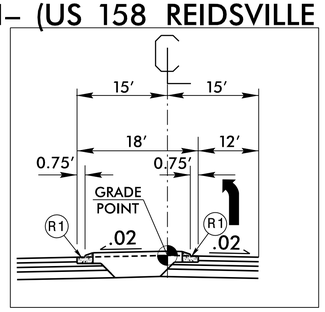

PARTIAL TYPICAL SECTION NO. 4A

PARTIAL TYPICAL SECTION NO.4A :
USE IN CONJUNTION WITH NO. 4
–Y1– STA. 21+71.59 TO STA. 26+57.71

INSET FOR DUAL LEFTS –Y1– (US 158 REIDSVILLE RD)

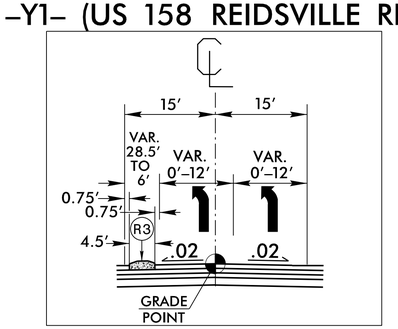

PARTIAL TYPICAL SECTION NO. 5A

PARTIAL TYPICAL SECTION NO. 5A:
USE IN CONJUNTION WITH T.S. NO. 5
–Y1– STA. 34+27.26 TO STA. 39+57.26

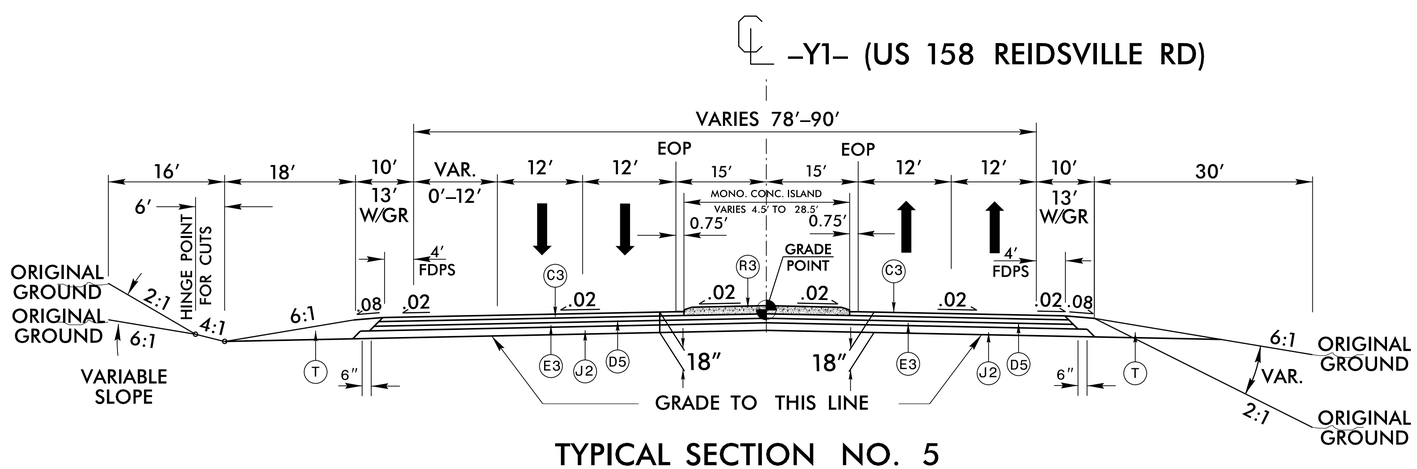

TYPICAL SECTION NO. 5

USE TYPICAL SECTION NO. 5:
–Y1– STA. 35+25.55+/– (END BR.) TO STA. 39+57.26

A1	12.5″ DOWELED CONC.
A2	12.5″ UN-DOWELED
A3	6″ CONC.
C1	1.25″ SF9.5A
C2	3″ S9.5B
C3	3″ S9.5C
C4	VAR. S9.5B
C5	VAR. S9.5C
C6	1.5″ S9.5B
C7	1.5″ S9.5C
D1	2.5″ I19.0B
D2	2.5″ I19.0C
D3	3.0″ I19.0B
D4	4″ I19.0B
D5	4″ I19.0C
D6	VAR. I19.0B
D7	VAR. I19.0C
E1	3″ B25.0B
E2	4″ B25.0B
E3	3″ B25.0C
E4	5.5″ B25.0C
E5	7″ B25.0C
E6	VAR. B25.0B
E7	VAR. B25.0C
E8	10.5″ B25.0C
E9	7″ B25.0B
F	NONWOVEN GEOTEXTILE
J1	6″ ABC
J2	8″ ABC
J3	10″ ABC
J4	VAR. ABC
K	SUBGRADE STABIL.
N	GEOTEXTILE STABIL.
P	PRIME COAT
R1	1′-6″CONC. C&G
R2	2′-6″CONC. C&G
R3	5″MONO.CONC.ISLAND
R4	SHOULDER BERM GUTTER
T	EARTH MATERIAL.
U	EXISTING PAVEMENT.
W	WEDGING
Y	RUMBLE STRIPS

5/14/99

7/31/2014
9:43:16 AM
u2579b_rdy_typ.dgn