PROJECT REFERENCE NO.	SHEET NO.
U-2579B	2A-17
R/W SHEET NO.	
ROADWAY DESIGN ENGINEER	PAVEMENT DESIGN ENGINEER
NORTH CAROLINA PROFESSIONAL SEAL 18494 ENGINEER ANTHONY AARON HOUSE — Anthony House 7/11/2014	NORTH CAROLINA PROFESSIONAL SEAL 22896 ENGINEER CLARK S. MORRISON — Clark S. Morrison 7/13/2014

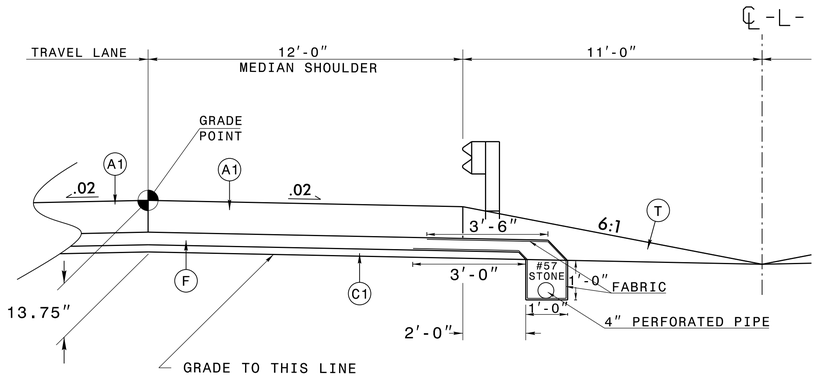

MEDIAN SHOULDER DRAIN WITH GUARDRAIL

STA. 558+24 TO 582+55 (LT, MEDIAN)
OUTLETS: 558+30 (2GI), 560+50 (2GI), 563+50 (2GI),
566+76 (2GI), 569+50 (2GI) 572+50 (2GI),
575+90 (2GI), 578+76 (2GI), 581+73 (2GI)

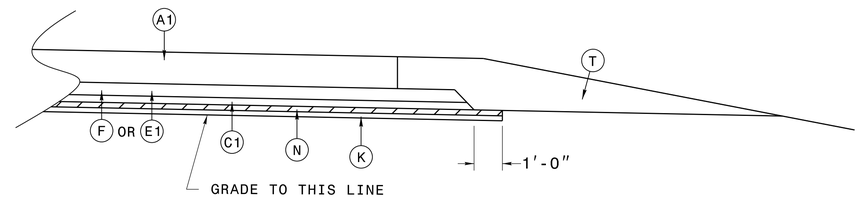

-L- SUBGRADE STABILIZATION

(SEE SUMMARY ON SHEET 3G-1 FOR LOCATIONS)

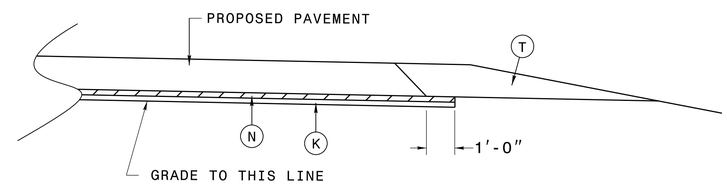

SUBGRADE STABILIZATION

-Y1LPA-, -Y1LPD-, -Y1RPA-, -Y1RPD-, -Y4CD-, -Y4LPA-,
-Y4LPD-, -Y4RPA-, -Y4RPB-, -Y4RPBD-, -Y4RPC-, -Y4RPD-
(SEE SUMMARY ON SHEET 3G-1 FOR LOCATIONS)

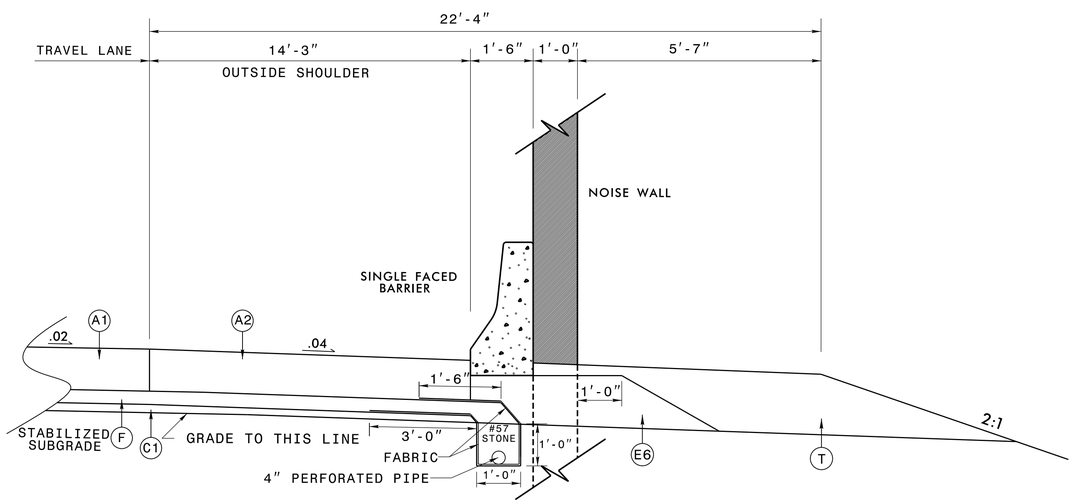

DETAIL OF NOISE WALL NWL1 WITH SHOULDER DRAIN

STA. 558+24 TO 582+55 (RT, OUTSIDE)
OUTLETS: 558+30 (2GI), 560+50 (2GI), 563+50 (2GI),
566+76 (2GI), 569+50 (2GI) 572+50 (2GI),
575+90 (2GI), 578+76 (2GI), 581+73 (2GI)

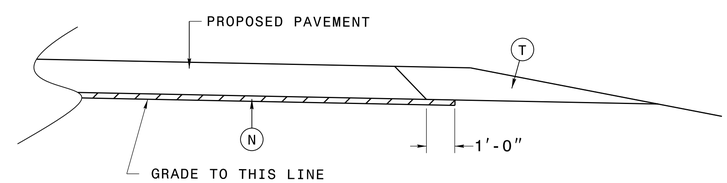

SUBGRADE STABILIZATION

-Y1-, -Y5-, -Y6-, -Y1DET-, -Y5DET-
(SEE SUMMARY ON SHEET 3G-1 FOR LOCATIONS)

A1	12.5" DOWELED CONC.
A2	12.5" UN-DOWELED
A3	6" CONC.
C1	1.25" SF9.5A
C2	3" S9.5B
C3	3" S9.5C
C4	VAR. S9.5B
C5	VAR. S9.5C
C6	1.5" S9.5B
C7	1.5" S9.5C
D1	2.5" I19.0B
D2	2.5" I19.0C
D3	3.0" I19.0B
D4	4" I19.0B
D5	4" I19.0C
D6	VAR. I19.0B
D7	VAR. I19.0C
E1	3" B25.0B
E2	4" B25.0B
E3	3" B25.0C
E4	5.5" B25.0C
E5	7" B25.0C
E6	VAR. B25.0B
E7	VAR. B25.0C
E8	10.5" B25.0C
E9	7" B25.0B
F	NONWOVEN GEOTEXTILE
J1	6" ABC
J2	8" ABC
J3	10" ABC
J4	VAR. ABC
K	SUBGRADE STABIL.
N	GEOTEXTILE STABIL.
P	PRIME COAT
R1	1'-6"CONC. C&G
R2	2'-6"CONC. C&G
R3	5"MONO.CONC.ISLAND
R4	SHOULDER BERM GUTTER
T	EARTH MATERIAL.
U	EXISTING PAVEMENT.
W	WEDGING
Y	RUMBLE STRIPS

5/14/99

7/31/2014
u2579b_rdy_typ.dgn
9:49:25 AM