PROJECT REFERENCE NO.	SHEET NO.
U-2579B	2C-3

STATE OF NORTH CAROLINA DEPT. OF TRANSPORTATION DIVISION OF HIGHWAYS RALEIGH, N.C.

ENGLISH DETAIL DRAWING FOR
GUARDRAIL ANCHOR UNIT
GUARDRAIL ANCHOR UNIT TYPE B-77
FOR F-SHAPE BARRIER

SHEET 4 OF 7
862D03

GENERAL NOTES:
1) POSTS 1 THROUGH 5 REQUIRE AN ADDITIONAL HOLE TO ATTACH LOWER BLOCKOUTS AND/OR RUBRAIL.
2) RUBRAIL BLOCKOUTS LOCATED ON POSTS 1 THROUGH 4 ARE OFFSET DRILLED AND SECURED WITH $\frac{5}{8}$" BUTTONHEAD BOLTS (SEE CHART FOR BOLT LENGTH). BLOCKOUT ON POST 5 AND RUBRAIL IS SECURED TO POST 5 WITH $\frac{5}{8}$" x 4½" BUTTONHEAD BOLTS. RUBRAIL IS FLARED TO BACK OF POST 6 AND NOT SECURED.
3) STEEL SPACER TUBE IS A SCHEDULE 40 GALVANIZED PIPE 6" INSIDE DIAMETER x 9" LONG. ATTACH TUBE TO GUARDRAIL ONLY WITH $\frac{5}{8}$" x 1¼" LONG BUTTONHEAD BOLT AND RECTANGULAR PLATE WASHER.
4) SEE DETAIL D FOR SLOPED RUBRAIL BLOCKOUT. BLOCKOUT IS ATTACHED TO RAIL ELEMENT ONLY. USE $\frac{3}{8}$" x 3" LAG BOLT WITH FLAT WASHER.
5) SLOPE PARALLEL RUBRAIL END TO BE CONSISTENT WITH THE SLOPE OF THE F SHAPE AND ATTACH FLUSH WITH THE SLOPED TOE OF THE BARRIER OR BRIDGE RAIL.
6) ANCHORAGE:
(a) AT EXISTING BRIDGE RAIL AND NEW OR EXISTING BARRIERS, ANCHOR RUBRAIL USING THREE $\frac{5}{8}$" x 6" CHEMICALLY ANCHORED BOLTS WITH WASHERS: MAXIMUM PROJECTION FOR BOLTS IS ½".
(b) AT EXISTING BRIDGE RAILS AND NEW BRIDGE RAILS, ANCHOR THE W-BEAM END SHOE USING A 4 BOLT HOLD DOWN PLATE (SEE STD. DWG. 857.011).
A 4 BOLT INSERT ASSEMBLY IS ALLOWED ON PRECAST REINFORCED CONCRETE BARRIER (SEE STD. DWG. 862.04).
INSTALL THE W-BEAM END SHOE BEHIND THE NESTED W-BEAM ELEMENTS.
(c) AT NEW BRIDGE RAIL, ANCHOR THE W-BEAM END SHOE AND RUBRAIL AS DETAILED ON THE STRUCTURE PLANS.
7) POSTS 1 AND 2 ARE W8 x 13, 7'-6" LONG. ALL OTHER POSTS IN THE ANCHOR UNIT ARE W6 x 8.5.

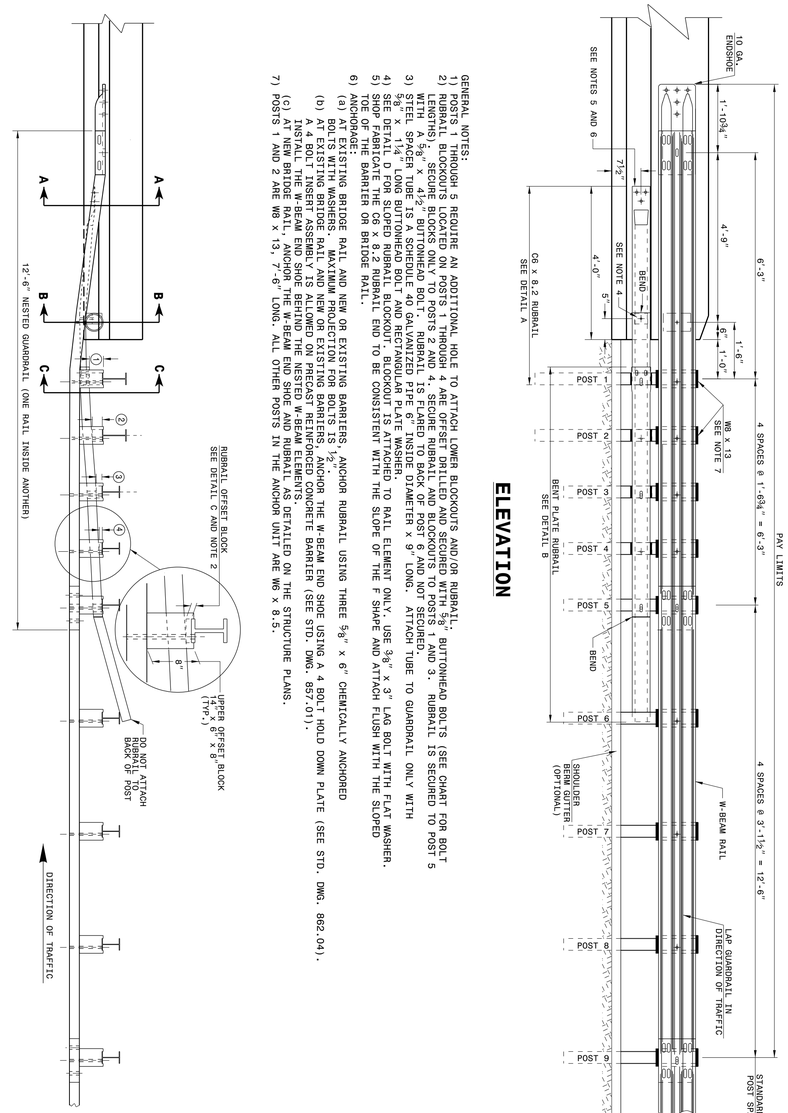

GUARDRAIL ANCHOR UNIT TYPE B-77

ENGLISH DETAIL DRAWING FOR
STRUCTURE ANCHOR UNIT
GUARDRAIL ANCHOR UNIT TYPE B-77
FOR F-SHAPE BARRIER

STATE OF NORTH CAROLINA DEPT. OF TRANSPORTATION DIVISION OF HIGHWAYS RALEIGH, N.C.

SHEET 5 OF 7
862D03

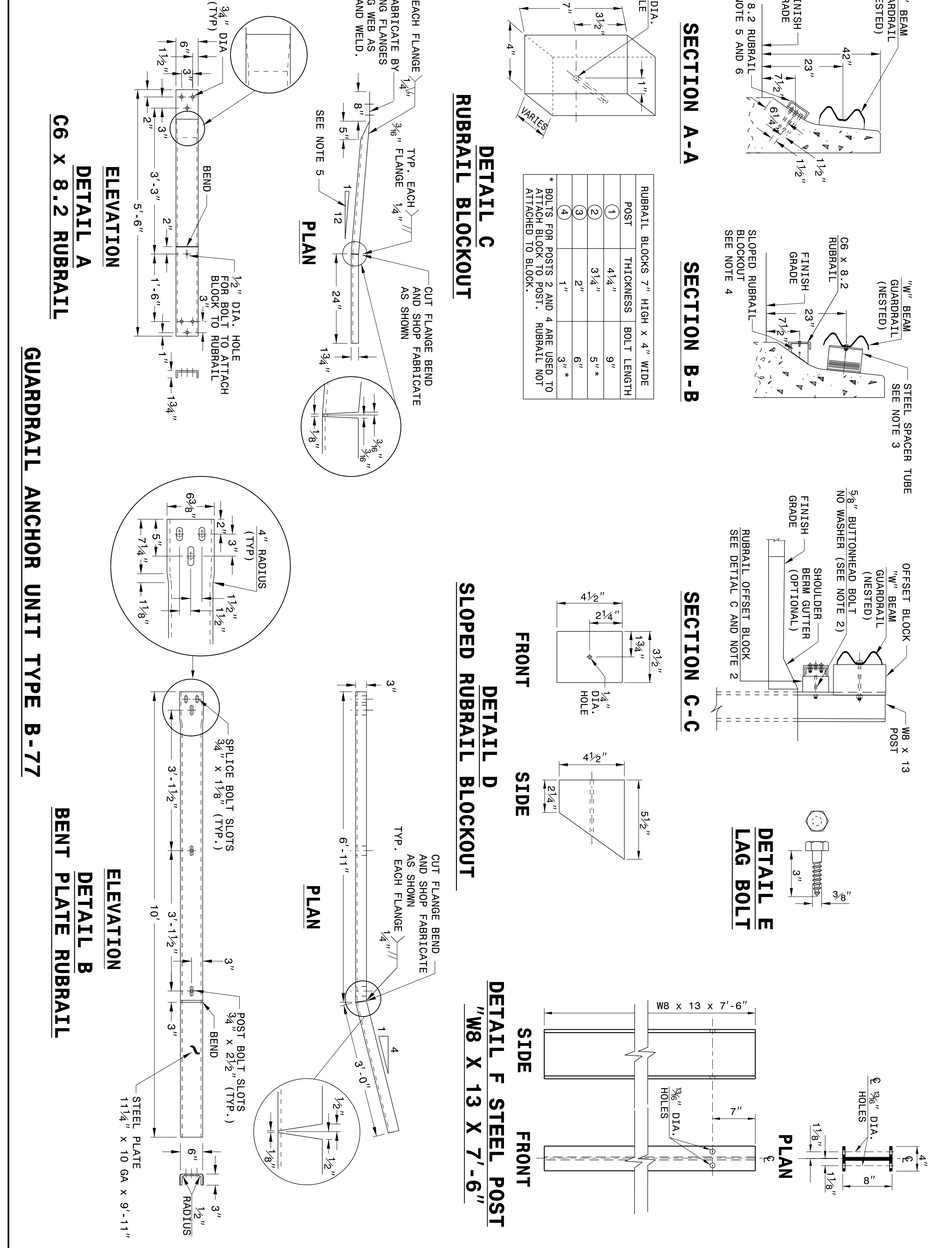

RUBRAIL BLOCKS 7" HIGH x 4" WIDE		
POST	THICKNESS	BOLT LENGTH
1	4¼"	9"
2	3¼"	5"*
3	2"	6"
4	1"	3"*

* BOLTS FOR POSTS 2 AND 4 ARE USED TO ATTACH BLOCK TO POST, RUBRAIL NOT ATTACHED TO BLOCK.

STATE OF NORTH CAROLINA DEPT. OF TRANSPORTATION DIVISION OF HIGHWAYS RALEIGH, N.C.

ENGLISH DETAIL DRAWING FOR
STRUCTURE ANCHOR UNIT
GUARDRAIL ANCHOR UNIT TYPE B-77
FOR F-SHAPE BARRIER

SHEET 5 OF 7
862D03

NORTH CAROLINA PROFESSIONAL SEAL 022966 ENGINEER Joel Howerton
DocuSigned by: Joel Howerton B73F3D170CDC45F...
8/12/2014

CONTRACT STANDARDS AND DEVELOPMENT UNIT
Office 919-707-6950 FAX 919-250-4119

SEE TITLE BLOCK

ORIGINAL BY: J HOWERTON DATE: 06-22-12
MODIFIED BY: DATE:
CHECKED BY: DATE:
FILE SPEC.:

$$$$$$$$SYSTIME$$$$$$$$
$$$$$$$$DGN$$$$$$$$
$$$$$$$$USERNAME$$$$$$$$