PROJECT REFERENCE NO.	SHEET NO.
U-2579B	2A-1
R/W SHEET NO.	
ROADWAY DESIGN ENGINEER	PAVEMENT DESIGN ENGINEER

NORTH CAROLINA PROFESSIONAL SEAL 18494 ENGINEER ANTHONY AARON HOSEY
DocuSigned by: Anthony Hosey 8/13/2014
DOCUSIGNED

NORTH CAROLINA PROFESSIONAL SEAL 22896 ENGINEER CLARK S. HORRIGAN
DocuSigned by: Clark S. Horrigan 8/13/2014
DOCUSIGNED

PAVEMENT SCHEDULE

A1	12.5" DOWELED JOINTED PORTLAND CEMENT CONCRETE PAVEMENT
A2	12.5" UN-DOWELED JOINTED PORTLAND CEMENT CONCRETE PAVEMENT
A3	6" PORTLAND CEMENT CONCRETE PAVEMENT
C1	PROP. APPROX. 1.25" ASPHALT CONCRETE SURFACE COURSE, TYPE SF9.5A AT AN AVERAGE RATE OF 137.5 LBS.PER SQ.YD.
C2	PROP. APPROX. 3" ASPHALT CONCRETE SURFACE COURSE, TYPE S9.5B AT AN AVERAGE RATE OF 168 LBS. PER SQ. YD. IN EACH OF TWO LAYERS.
C3	PROP. APPROX. 3" ASPHALT CONCRETE SURFACE COURSE, TYPE S9.5C AT AN AVERAGE RATE OF 168 LBS. PER SQ. YD. IN EACH OF TWO LAYERS.
C4	PROP. VAR. DEPTH ASPHALT CONCRETE SURFACE COURSE, TYPE S9.5B, AT AN AVERAGE RATE OF 112 LBS. PER SQ.YD. PER 1" DEPTH. TO BE PLACED IN LAYERS NOT TO EXCEED 2" IN DEPTH.
C5	PROP. VAR. DEPTH ASPHALT CONCRETE SURFACE COURSE, TYPE S9.5C, AT AN AVERAGE RATE OF 112 LBS. PER SQ.YD. PER 1" DEPTH. TO BE PLACED IN LAYERS NOT TO EXCEED 2" IN DEPTH.
C6	PROP. APPROX. 1.5" ASPHALT CONCRETE SURFACE COURSE, TYPE S9.5B AT AN AVERAGE RATE OF 168 LBS.PER SQ.YD.
C7	PROP. APPROX. 1.5" ASPHALT CONCRETE SURFACE COURSE, TYPE S9.5C AT AN AVERAGE RATE OF 168 LBS.PER SQ.YD.
D1	PROP. APPROX. 2.5"ASPHALT CONCRETE INTERMEDIATE COURSE, TYPE I19.0B, AT AN AVERAGE RATE OF 285 LBS. PER SQ. YD.
D2	PROP. APPROX. 2.5"ASPHALT CONCRETE INTERMEDIATE COURSE, TYPE I19.0C, AT AN AVERAGE RATE OF 285 LBS. PER SQ. YD.
D3	PROP. APPROX. 3.0"ASPHALT CONCRETE INTERMEDIATE COURSE, TYPE I19.0B, AT AN AVERAGE RATE OF 342 LBS. PER SQ. YD.
D4	PROP. APPROX. 4"ASPHALT CONCRETE INTERMEDIATE COURSE, TYPE I19.0B, AT AN AVERAGE RATE OF 456 LBS. PER SQ. YD.
D5	PROP. APPROX. 4"ASPHALT CONCRETE INTERMEDIATE COURSE, TYPE I19.0C, AT AN AVERAGE RATE OF 456 LBS. PER SQ. YD.
D6	PROP. VAR. DEPTH ASPHALT CONCRETE INTERMEDIATE COURSE, TYPE I19.0B, AT AN AVERAGE RATE OF 114 LBS. PER SQ. YD. PER 1" DEPTH, TO BE PLACED IN LAYERS NOT LESS THAN 2 1/2" IN DEPTH OR GREATER THAN 4" IN DEPTH.
D7	PROP. VAR. DEPTH ASPHALT CONCRETE INTERMEDIATE COURSE, TYPE I19.0C, AT AN AVERAGE RATE OF 114 LBS. PER SQ. YD. PER 1" DEPTH, TO BE PLACED IN LAYERS NOT LESS THAN 2 1/2" IN DEPTH OR GREATER THAN 4" IN DEPTH.
E1	PROP. APPROX. 3" ASPHALT CONCRETE BASE COURSE, TYPE B25.0B AT AN AVERAGE RATE OF 342 LBS. PER SQ. YD.
E2	PROP. APPROX. 4" ASPHALT CONCRETE BASE COURSE, TYPE B25.0B AT AN AVERAGE RATE OF 456 LBS. PER SQ. YD.
E3	PROP. APPROX. 3" ASPHALT CONCRETE BASE COURSE, TYPE B25.0C AT AN AVERAGE RATE OF 342 LBS. PER SQ. YD.
E4	PROP. APPROX. 5.5" ASPHALT CONCRETE BASE COURSE, TYPE B25.0C, AT AN AVERAGE RATE OF 627 LBS. PER SQ. YD.
E5	PROP. APPROX. 7" ASPHALT CONCRETE BASE COURSE, TYPE B25.0C AT AN AVERAGE RATE OF 399 LBS. PER SQ. YD. IN EACH OF TWO LAYERS.
E6	PROP. VAR. DEPTH ASPHALT CONCRETE BASE COURSE, TYPE B25.0B, AT AN AVERAGE RATE OF 114 LBS. PER SQ. YD. PER 1" DEPTH TO BE PLACED IN LAYERS NOT LESS THAN 3" IN DEPTH OR GREATER THAN 5 1/2 " IN DEPTH.
E7	PROP. VAR. DEPTH ASPHALT CONCRETE BASE COURSE, TYPE B25.0C, AT AN AVERAGE RATE OF 114 LBS. PER SQ. YD. PER 1" DEPTH TO BE PLACED IN LAYERS NOT LESS THAN 3" IN DEPTH OR GREATER THAN 5 1/2 " IN DEPTH.
E8	PROP. APPROX. 10.5" ASPHALT CONCRETE BASE COURSE, TYPE B25.0C AT AN AVERAGE RATE OF 598.5 LBS. PER SQ. YD. EACH OF TWO LAYERS.
E9	PROP. APPROX. 7" ASPHALT CONCRETE BASE COURSE, TYPE B25.0B AT AN AVERAGE RATE OF 399 LBS. PER SQ. YD. IN EACH OF TWO LAYERS.
F	NONWOVEN GEOTEXTILE LAYER FOR SEPERATING CEMENTITIOUS PAVEMENT LAYER.
J1	PROP. 6" AGGREGATE BASE COURSE.
J2	PROP. 8" AGGREGATE BASE COURSE.
J3	PROP. 10" AGGREGATE BASE COURSE.
J4	PROP. VAR. DEPTH AGGREGATE BASE COURSE.
K	SUBBASE TO BE TREATED WITH LIME TO A DEPTH OF 8", AT A RATE OF 20 LBS PER SQ YD AS DIRECTED BY THE ENGINEER. OR SUBBASE TO BE TREATED WITH CEMENT TO A DEPTH OF 7", AT A RATE OF 55 LBS PER SQYD AS DIRECTED BY THE ENGINEER.
N	GEOTEXTILE FOR PAVEMENT STABILIZATION
P	PRIME COAT AT THE RATE OF 0.35 GAL. PER SQ. YD.
R1	1'-6"CONCRETE CURB AND GUTTER.
R2	2'-6"CONCRETE CURB AND GUTTER.
R3	5" MONOLITHIC CONCRETE ISLAND (KEY-IN).
R4	SHOULDER BERM GUTTER.
T	EARTH MATERIAL.
U	EXISTING PAVEMENT.
W	VARIABLE DEPTH ASPHALT PAVEMENT (SEE WEDGING DETAIL).
Y	RUMBLE STRIPS.

NOTE: PAV. EDGES ARE 1:1 UNLESS SHOWN OTHERWISE.

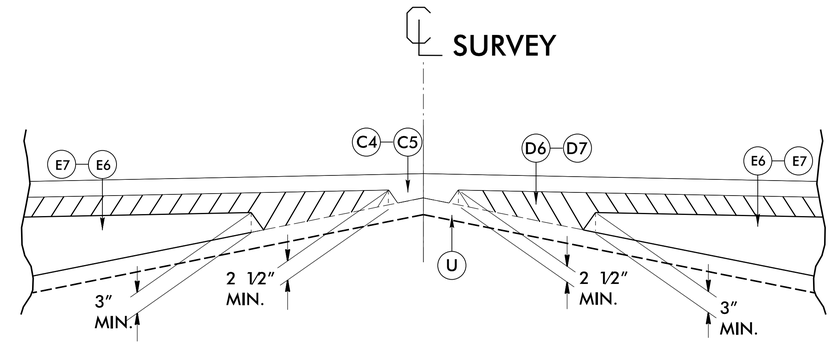

Detail Showing Method of Wedging

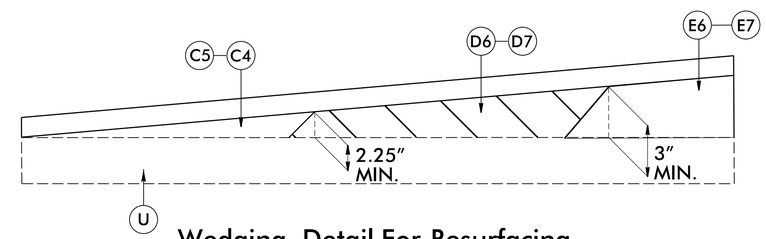

Wedging Detail For Resurfacing

* USE 4:1 CUT SLOPES

–L– STA. 513+50.00 TO STA. 520+50.00 RT
–L– STA. 514+00.00 TO STA. 519+50.00 LT
–L– STA. 530+50.00 TO STA. 538+50.00 LT
–L– STA. 542+00.00 TO STA. 554+00.00 RT
–L– STA. 547+00.00 TO STA. 552+50.00 LT
–L– STA. 670+50.00 TO STA. 685+50.00 RT

USE TYPICAL SECTION NO. 1:

–L– STA. 478+00.00 TO STA. 555+72.05 +/– (BEG. BR.)
–L– STA. 585+67.59 +/– (END BR.) TO STA. 627+02.88 +/– (BEG. BR.)
–L– STA. 630+12.62 +/– (END BR.) TO STA. 641+71.78 +/– (BEG. BR.)
–L– STA. 643+88.58 +/– (END BR.) TO STA. 692+32.98

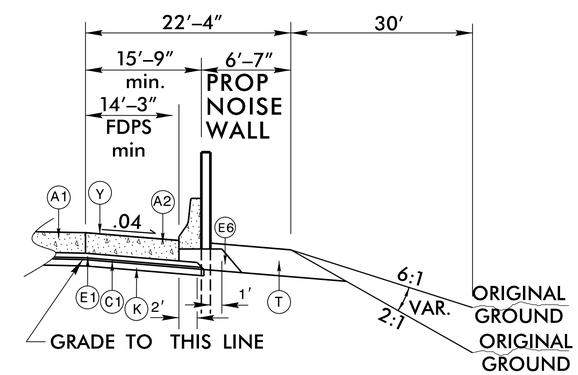

TYPICAL SECTION NO. 1A

USE TYPICAL SECTION NO. 1A:

–L– STA. 558+97.95 (BEG.) TO STA. 582+55.98 (END) RT (NOISE WALL – NWL1)
–L– STA. 586+05.54 (BEG.) TO STA. 609+68.44 (END) RT (NOISE WALL – NWL2)
–L– STA. 607+18.45 (BEG.) TO STA. 615+21.72 LT (NOISE WALL – NWL3)

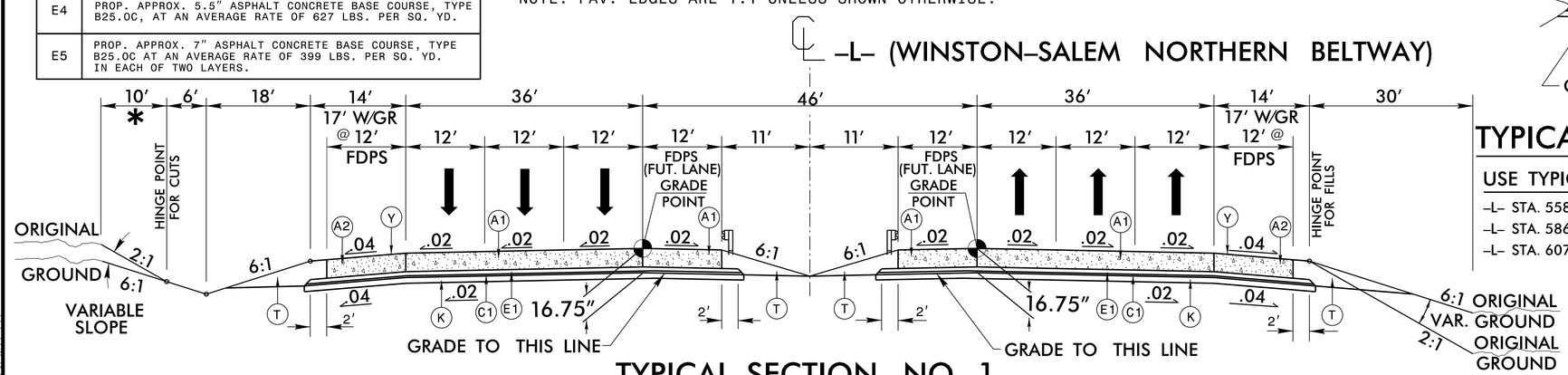

TYPICAL SECTION NO. 1

@ 14' FDPS WITH GUARDRAIL (SEE PLANS)

5/14/99

8/8/2014 6:22:34 PM u2579b_rdy_typ.dgn