PROJECT REFERENCE NO.	SHEET NO.
U-2579B	2A-15
R/W SHEET NO.	
ROADWAY DESIGN ENGINEER	PAVEMENT DESIGN ENGINEER

NORTH CAROLINA PROFESSIONAL SEAL 18494 ENGINEER ANTHONY AARON NOSER
Anthony Noser 8/11/2014

NORTH CAROLINA PROFESSIONAL SEAL 22896 ENGINEER CLARK S. MORRISON
Clark S. Morrison 8/13/2014

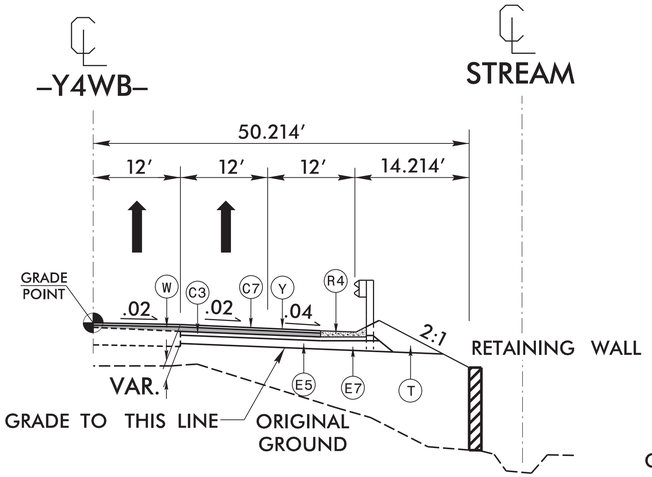

RETAINING WALL DETAIL 1:

–Y4WB– FROM END OF RCBC (46+59.65) TO 47+75.00 RT.

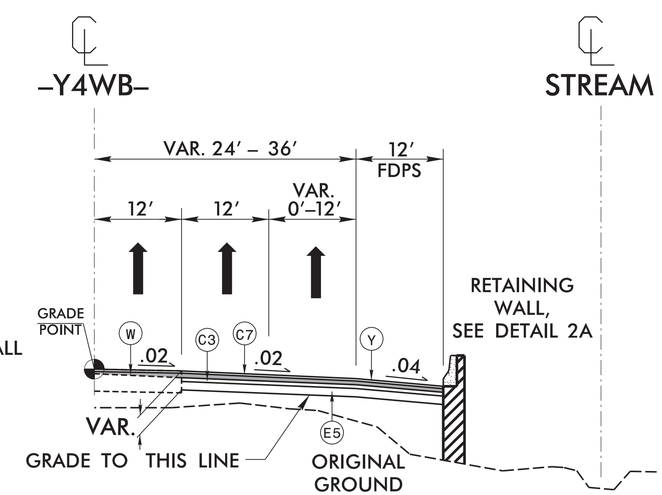

RETAINING WALL DETAIL 2:

–Y4WB– FROM STA. 50+50.00 TO STA. 55+50.00 RT.

REFER TO STRUCTURE DESIGN BRIDGE RAIL STANDARD DRAWING CBR1 FOR PLACEMENT OF HORIZONTAL REBAR IN THE JERSEY SHAPE PORTION OF THE SECANT WALL. TIE THE HORIZONTAL REBAR TO THE PROPOSED VERTICAL REBAR IN THE SECANT WALL.

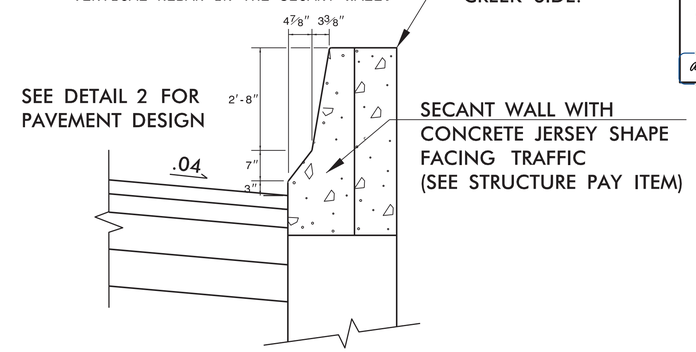

RETAINING WALL DETAIL 2A

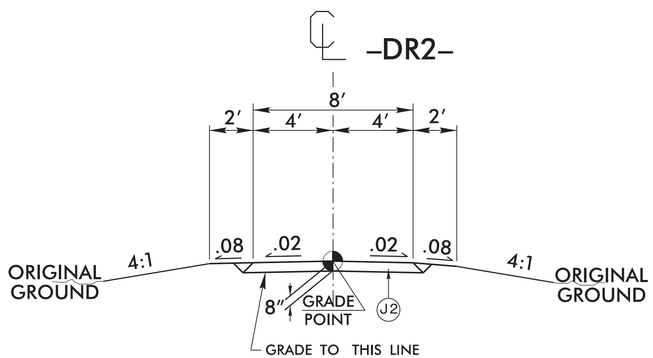

TYPICAL SECTION NO. 32

–DR2– STA. 10+75.00 TO STA. 11+49.24

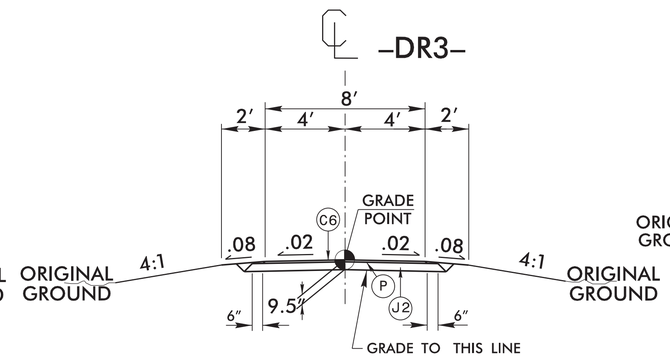

TYPICAL SECTION NO. 33

–DR3– STA. 10+57.00 TO STA. 11+30.40

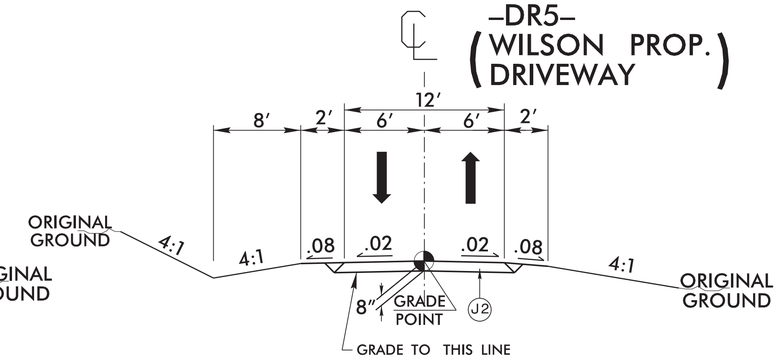

TYPICAL SECTION NO. 34

–DR5– STA. 10+35.07 TO STA. 22+96.07

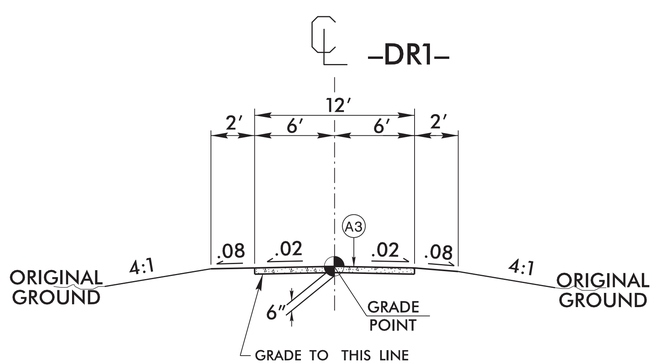

TYPICAL SECTION NO. 31

–DR1– STA. 10+00.00 TO STA. 10+93.58

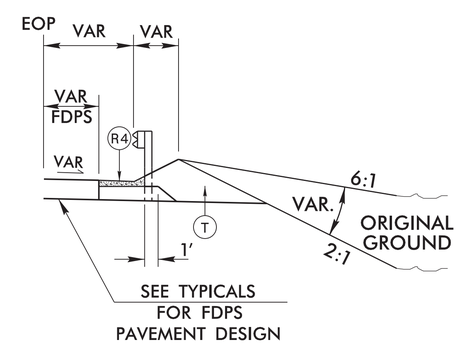

SHOULDER BERM GUTTER DETAIL

A1	12.5″ DOWELED CONC.
A2	12.5″ UN-DOWELED
A3	6″ CONC.
C1	1.25″ SF9.5A
C2	3″ S9.5B
C3	3″ S9.5C
C4	VAR. S9.5B
C5	VAR. S9.5C
C6	1.5″ S9.5B
C7	1.5″ S9.5C
D1	2.5″ I19.0B
D2	2.5″ I19.0C
D3	3.0″ I19.0B
D4	4″ I19.0B
D5	4″ I19.0C
D6	VAR. I19.0B
D7	VAR. I19.0C
E1	3″ B25.0B
E2	4″ B25.0B
E3	3″ B25.0C
E4	5.5″ B25.0C
E5	7″ B25.0C
E6	VAR. B25.0B
E7	VAR. B25.0C
E8	10.5″ B25.0C
E9	7″ B25.0B
F	NONWOVEN GEOTEXTILE
J1	6″ ABC
J2	8″ ABC
J3	10″ ABC
J4	VAR. ABC
K	SUBGRADE STABIL.
N	GEOTEXTILE STABIL.
P	PRIME COAT
R1	1′-6″CONC. C&G
R2	2′-6″CONC. C&G
R3	5″MONO.CONC.ISLAND
R4	SHOULDER BERM GUTTER
T	EARTH MATERIAL.
U	EXISTING PAVEMENT.
W	WEDGING
Y	RUMBLE STRIPS

5/14/99

7/31/2014
11:47:37 AM
U:\2579b_rdy_typ.dgn