See Sheet 1A For Index of Sheets
See Sheet 1B For Conventional Symbols

STATE OF NORTH CAROLINA
DIVISION OF HIGHWAYS

BLADEN COUNTY

STATE	STATE PROJECT REFERENCE NO.	SHEET NO.	TOTAL SHEETS
N.C.	B–5117	1	

STATE PROJ. NO.	F. A. PROJ. NO.	DESCRIPTION
42258.1.1	BRSTP–0210(19)	PE
42258.2.1	BRSTP–0210(19)	R/W & UTIL.
42258.3.FR1	BRSTP–0210(19)	CONST.

LOCATION: BRIDGE NO. 47 OVER LAKE CREEK ON NC 210

TYPE OF WORK: GRADING, DRAINAGE, PAVING AND STRUCTURE

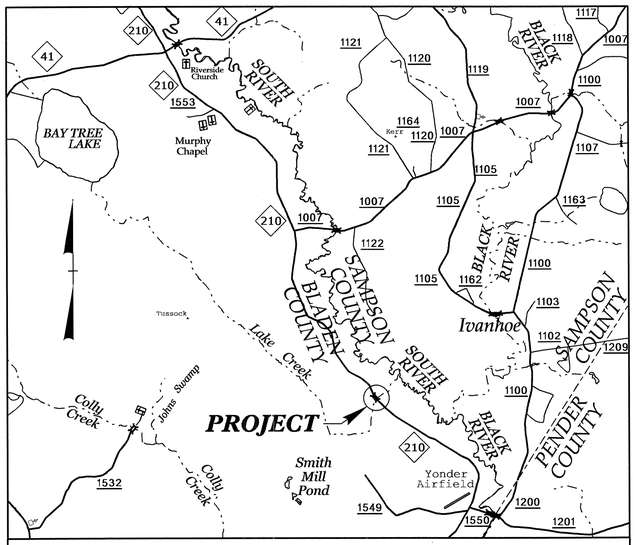

VICINITY MAP

NAD 83/ NSRS 2007

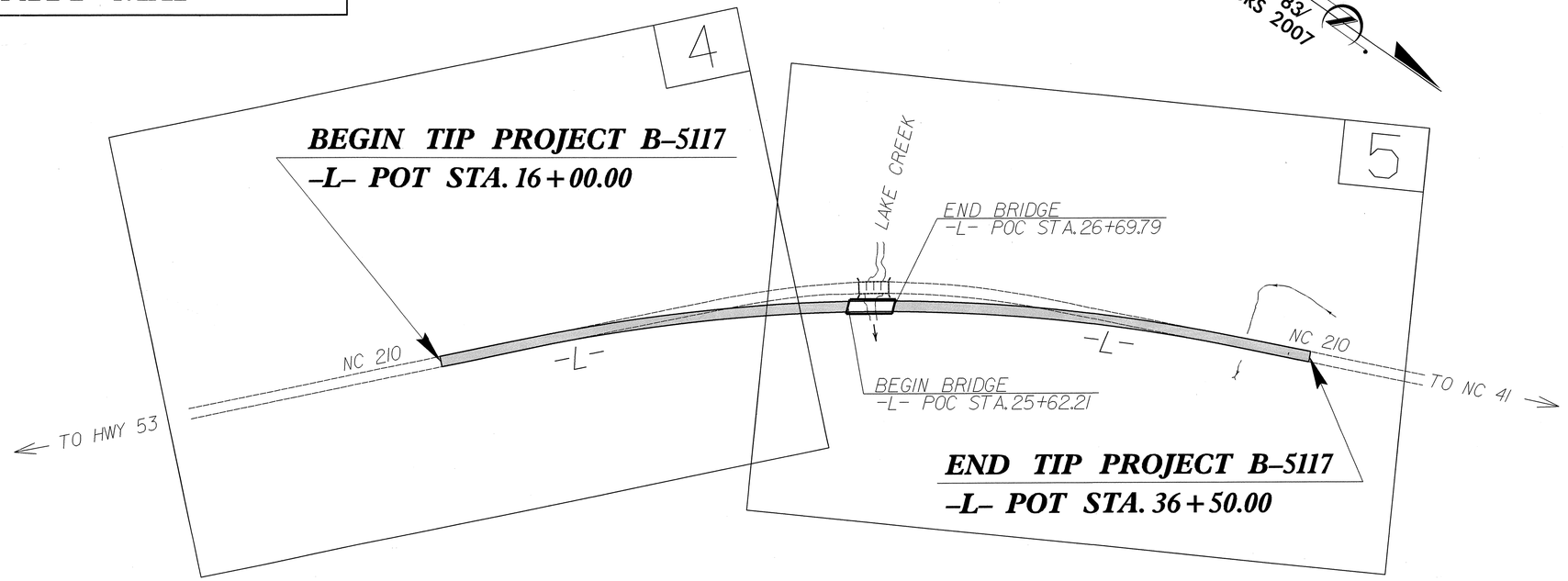

TIP PROJECT: B–5117

CONTRACT: C203459

15-MAY-2014 08:35
R:\Roadway\Proj\b5117_rdy_tsh.dgn
$$$$USERNAME$$$$

GRAPHIC SCALES

50′ 25′ 0 50′ 100′
PLANS

50′ 25′ 0 50′ 100′
PROFILE (HORIZONTAL)

10′ 5′ 0 10′ 20′
PROFILE (VERTICAL)

DESIGN DATA

ADT 2014	=	460
ADT 2034	=	690
K	=	11 %
D	=	60 %
T	=	32 % *
V	=	60 MPH
FUNC. CLASS.	=	COLLECTOR

* TTST 22% DUAL 10%
REGIONAL TIER

PROJECT LENGTH

LENGTH ROADWAY	TIP PROJECT B–5117	=	0.368 MI.
LENGTH STRUCTURE	TIP PROJECT B–5117	=	0.020 MI.
TOTAL LENGTH OF	TIP PROJECT B–5117	=	0.388 MI.

Prepared In the Office of:
DIVISION OF HIGHWAYS
1000 Birch Ridge Dr.
Raleigh, NC 27610

2012 STANDARD SPECIFICATIONS

RIGHT OF WAY DATE:
AUGUST 14, 2012

LETTING DATE:
AUGUST 19, 2014

REKHA PATEL, P.E.
PROJECT ENGINEER

SAMUEL L. ST. CLAIR
PROJECT DESIGN ENGINEER

HYDRAULICS ENGINEER
NORTH CAROLINA PROFESSIONAL SEAL 14482 ENGINEER JOSEPH W. DUNNEHOO
SIGNATURE: 6/3/14 P.E.

ROADWAY DESIGN ENGINEER
NORTH CAROLINA PROFESSIONAL SEAL 16378 ENGINEER REKHA V. PATEL P.E.
SIGNATURE: 6/27/14

STATE OF NORTH CAROLINA · DEPARTMENT OF TRANSPORTATION

5/28/99

PROJECT REFERENCE NO.	SHEET NO.
B-5117	1A

ROADWAY DESIGN ENGINEER

NORTH CAROLINA PROFESSIONAL SEAL 16378 ENGINEER REKHA V. PATEL

6/1/2014

Rekha V Patel

STATE OF NORTH CAROLINA
DIVISION OF HIGHWAYS

INDEX OF SHEETS

SHEET NUMBER	SHEET
1	TITLE SHEET
1A	INDEX OF SHEETS, GENERAL NOTES AND LIST OF STANDARD DRAWINGS
1B	CONVENTIONAL SYMBOLS
1C-1	SURVEY CONTROL SHEETS
2A-1 THRU 2A-2	TYPICAL SECTIONS
2B-1	UNDERCUT DETAILS
2C-1	STRUCTURE ANCHOR UNITS, GUARDRAIL ANCHOR UNIT TYPE III
2C-2	TEMPORARY ANCHOR UNIT TYPE W-BEAM
3B-1	SUMMARIES OF GUARDRAIL, TEMPORARY GUARDRAIL, PAVEMENT REMOVAL AND EARTHWORK
3D-1	LIST OF PIPES, ENDWALLS, ETC. (FOR PIPES 48" & UNDER)
3G-1	SUMMARIES OF SUBSURFACE DRAINS AND AGGREGATE SUBGRADE / STABILIZATION
3P-1	PARCEL INDEX SHEET
4 THRU 5	PLAN SHEETS
6	PROFILE SHEET
TMP-1 THRU TMP-15	TRANSPORTATION MANAGEMENT PLANS
PMP-1 THRU PMP-2	PAVEMENT MARKING PLANS
EC-1 THRU EC-7	EROSION CONTROL PLANS
SIGN-1 THRU SIGN-2	SIGNING PLANS
UO-1 THRU UO-3	UTILITIES BY OTHERS PLANS
X-1A	CROSS-SECTION SUMMARY SHEET
X-1 THRU X-9	CROSS-SECTIONS
S-1 THRU S-23	STRUCTURE PLANS

GENERAL NOTES:

2012 SPECIFICATIONS
EFFECTIVE: 01-17-2012
REVISED: 07-30-2012

GRADING AND SURFACING OR RESURFACING AND WIDENING:

THE GRADE LINES SHOWN DENOTE THE FINISHED ELEVATION OF THE PROPOSED SURFACING AT GRADE POINTS SHOWN ON THE TYPICAL SECTIONS. WHERE NO GRADE LINES ARE SHOWN, THE PROFILES SHOWN DENOTE THE TOP ELEVATION OF THE EXISTING PAVEMENT ALONG THE CENTER LINE OF SURVEY ON WHICH THE PROPOSED RESURFACING WILL BE PLACED. GRADE LINES MAY BE ADJUSTED BY THE ENGINEER IN ORDER TO SECURE A PROPER TIE-IN.

CLEARING:

CLEARING ON THIS PROJECT SHALL BE PERFORMED TO THE LIMITS ESTABLISHED BY METHOD II.

SUPERELEVATION:

ALL CURVES ON THIS PROJECT SHALL BE SUPERELEVATED IN ACCORDANCE WITH STD. NO. 225.04 USING THE RATE OF SUPERELEVATION AND RUNOFF SHOWN ON THE PLANS. SUPERELEVATION IS TO BE REVOLVED ABOUT THE GRADE POINTS SHOWN ON THE TYPICAL SECTIONS.

SHOULDER CONSTRUCTION:

ASPHALT, EARTH, AND CONCRETE SHOULDER CONSTRUCTION ON THE HIGH SIDE OF SUPERELEVATED CURVES SHALL BE IN ACCORDANCE WITH STD. NO. 560.01.

SIDE ROADS:

THE CONTRACTOR WILL BE REQUIRED TO DO ALL NECESSARY WORK TO PROVIDE SUITABLE CONNECTIONS WITH ALL ROADS, STREETS, AND DRIVES ENTERING THIS PROJECT. THIS WORK WILL BE PAID FOR AT THE CONTRACT UNIT PRICE FOR THE PARTICULAR ITEMS INVOLVED.

SUBSURFACE DRAINS:

SUBSURFACE DRAINS SHALL BE CONSTRUCTED IN ACCORDANCE WITH STD. NO. 815.02 AT LOCATIONS DIRECTED BY THE ENGINEER.

GUARDRAIL:

THE GUARDRAIL LOCATIONS SHOWN ON THE PLANS MAY BE ADJUSTED DURING CONSTRUCTION AS DIRECTED BY THE ENGINEER. THE CONTRACTOR SHOULD CONSULT WITH THE ENGINEER PRIOR TO ORDERING GUARDRAIL MATERIAL.

TEMPORARY SHORING:

SHORING REQUIRED FOR THE MAINTENANCE OF TRAFFIC NOT SHOWN ON THE PLANS WILL BE PAID FOR AT THE CONTRACT PRICE FOR "TEMPORARY SHORING".

END BENTS:

THE ENGINEER SHALL CHECK THE STRUCTURE END BENT PLANS, DETAILS, AND CROSS-SECTION PRIOR TO SETTING OF THE SLOPE STAKES FOR THE EMBANKMENT OR EXCAVATION APPROACHING A BRIDGE.

UTILITIES:

UTILITY OWNERS ON THIS PROJECT ARE

FOUR COUNTY EMC (POWER)

STAR TELEPHONE (TELEPHONE)

ANY RELOCATION OF EXISTING UTILITIES WILL BE ACCOMPLISHED BY OTHERS.

RIGHT-OF-WAY MARKERS:

ALL RIGHT-OF-WAY MARKERS ON THIS PROJECT SHALL BE PLACED BY OTHERS.

EFF. 01-17-2012
REV. 10-30-2012

2012 ROADWAY ENGLISH STANDARD DRAWINGS

The following Roadway Standards as appear in "Roadway Standard Drawings" Highway Design Branch - N. C. Department of Transportation - Raleigh, N. C., Dated January, 2012 are applicable to this project and by reference hereby are considered a part of these plans:

STD.NO.	TITLE
	DIVISION 2 - EARTHWORK
200.02	Method of Clearing - Method II
225.02	Guide for Grading Subgrade - Secondary and Local
225.04	Method of Obtaining Superelevation - Two Lane Pavement
	DIVISION 3 - PIPE CULVERTS
300.01	Method of Pipe Installation
310.10	Driveway Pipe Construction
	DIVISION 4 - MAJOR STRUCTURES
422.10	Reinforced Bridge Approach Fills
	DIVISION 5 - SUBGRADE, BASES AND SHOULDERS
560.01	Method of Shoulder Construction - High Side of Superelevated Curve - Method I
	DIVISION 6 - ASPHALT BASES AND PAVEMENTS
654.01	Pavement Repairs
	DIVISION 8 - INCIDENTALS
815.02	Subsurface Drain
838.01	Concrete Endwall for Single and Double Pipe Culverts - 15" thru 48" Pipe 90 Skew
838.11	Brick Endwall for Single and Double Pipe Culverts - 15" thru 48" Pipe 90 Skew
838.80	Precast Endwalls - 12" thru 72" Pipe 90 Skew
840.00	Concrete Base Pad for Drainage Structures
840.25	Anchorage for Frames - Brick or Concrete or Precast
840.29	Frames and Narrow Slot Flat Grates
840.35	Traffic Bearing Grated Drop Inlet - for Cast Iron Double Frame and Grates
840.46	Traffic Bearing Precast Drainage Structure
840.66	Drainage Structure Steps
846.01	Concrete Curb, Gutter and Curb & Gutter
846.04	Drop Inlet Installation in Shoulder Berm Gutter
862.01	Guardrail Placement
862.02	Guardrail Installation
876.01	Rip Rap in Channels
876.02	Guide for Rip Rap at Pipe Outlets

20-MAY-2014 15:35
R:\Roadway\Proj\b5117_rdy_tsh.dgn
$$$$USERNAME$$$$

04/16/11

PROJECT REFERENCE NO.	SHEET NO.
B-5117	1B

Note: Not to Scale

****S.U.E. = Subsurface Utility Engineering***

STATE OF NORTH CAROLINA
DIVISION OF HIGHWAYS

CONVENTIONAL PLAN SHEET SYMBOLS

BOUNDARIES AND PROPERTY:

- State Line
- County Line
- Township Line
- City Line
- Reservation Line
- Property Line
- Existing Iron Pin — EIP
- Property Corner
- Property Monument — ECM
- Parcel/Sequence Number — 123
- Existing Fence Line
- Proposed Woven Wire Fence
- Proposed Chain Link Fence
- Proposed Barbed Wire Fence
- Existing Wetland Boundary — WLB
- Proposed Wetland Boundary — WLB
- Existing Endangered Animal Boundary — EAB
- Existing Endangered Plant Boundary — EPB
- Known Soil Contamination: Area or Site
- Potential Soil Contamination: Area or Site

BUILDINGS AND OTHER CULTURE:

- Gas Pump Vent or U/G Tank Cap
- Sign — S
- Well — W
- Small Mine
- Foundation
- Area Outline
- Cemetery
- Building
- School
- Church
- Dam

HYDROLOGY:

- Stream or Body of Water
- Hydro, Pool or Reservoir
- Jurisdictional Stream — JS
- Buffer Zone 1 — BZ 1
- Buffer Zone 2 — BZ 2
- Flow Arrow
- Disappearing Stream
- Spring
- Wetland
- Proposed Lateral, Tail, Head Ditch — FLOW
- False Sump

RAILROADS:

- Standard Gauge — CSX TRANSPORTATION
- RR Signal Milepost — MILEPOST 35
- Switch — SWITCH
- RR Abandoned
- RR Dismantled

RIGHT OF WAY:

- Baseline Control Point
- Existing Right of Way Marker
- Existing Right of Way Line
- Proposed Right of Way Line — RW
- Proposed Right of Way Line with Iron Pin and Cap Marker — RW
- Proposed Right of Way Line with Concrete or Granite R/W Marker — RW
- Proposed Control of Access Line with Concrete C/A Marker — CA
- Existing Control of Access — CA
- Proposed Control of Access — CA
- Existing Easement Line — E
- Proposed Temporary Construction Easement — E
- Proposed Temporary Drainage Easement — TDE
- Proposed Permanent Drainage Easement — PDE
- Proposed Permanent Drainage / Utility Easement — DUE
- Proposed Permanent Utility Easement — PUE
- Proposed Temporary Utility Easement — TUE
- Proposed Aerial Utility Easement — AUE
- Proposed Permanent Easement with Iron Pin and Cap Marker

ROADS AND RELATED FEATURES:

- Existing Edge of Pavement
- Existing Curb
- Proposed Slope Stakes Cut — C
- Proposed Slope Stakes Fill — F
- Proposed Curb Ramp — CR
- Existing Metal Guardrail
- Proposed Guardrail
- Existing Cable Guiderail
- Proposed Cable Guiderail
- Equality Symbol
- Pavement Removal

VEGETATION:

- Single Tree
- Single Shrub
- Hedge
- Woods Line
- Orchard
- Vineyard — Vineyard

EXISTING STRUCTURES:

MAJOR:

- Bridge, Tunnel or Box Culvert — CONC
- Bridge Wing Wall, Head Wall and End Wall — CONC WW

MINOR:

- Head and End Wall — CONC HW
- Pipe Culvert
- Footbridge
- Drainage Box: Catch Basin, DI or JB — CB
- Paved Ditch Gutter
- Storm Sewer Manhole — S
- Storm Sewer — S

UTILITIES:

POWER:

- Existing Power Pole
- Proposed Power Pole
- Existing Joint Use Pole
- Proposed Joint Use Pole
- Power Manhole — P
- Power Line Tower
- Power Transformer
- U/G Power Cable Hand Hole
- H-Frame Pole
- Recorded U/G Power Line — P
- Designated U/G Power Line (S.U.E.*) — P

TELEPHONE:

- Existing Telephone Pole
- Proposed Telephone Pole
- Telephone Manhole — T
- Telephone Booth
- Telephone Pedestal — T
- Telephone Cell Tower
- U/G Telephone Cable Hand Hole — HH
- Recorded U/G Telephone Cable — T
- Designated U/G Telephone Cable (S.U.E.*) — T
- Recorded U/G Telephone Conduit — TC
- Designated U/G Telephone Conduit (S.U.E.*) — TC
- Recorded U/G Fiber Optics Cable — T FO
- Designated U/G Fiber Optics Cable (S.U.E.*) — T FO

WATER:

- Water Manhole — W
- Water Meter
- Water Valve
- Water Hydrant
- Recorded U/G Water Line — W
- Designated U/G Water Line (S.U.E.*) — W
- Above Ground Water Line — A/G Water

TV:

- TV Satellite Dish
- TV Pedestal — C
- TV Tower
- U/G TV Cable Hand Hole — HH
- Recorded U/G TV Cable — TV
- Designated U/G TV Cable (S.U.E.*) — TV
- Recorded U/G Fiber Optic Cable — TV FO
- Designated U/G Fiber Optic Cable (S.U.E.*) — TV FO

GAS:

- Gas Valve
- Gas Meter
- Recorded U/G Gas Line — G
- Designated U/G Gas Line (S.U.E.*) — G
- Above Ground Gas Line — A/G Gas

SANITARY SEWER:

- Sanitary Sewer Manhole
- Sanitary Sewer Cleanout
- U/G Sanitary Sewer Line — SS
- Above Ground Sanitary Sewer — A/G Sanitary Sewer
- Recorded SS Forced Main Line — FSS
- Designated SS Forced Main Line (S.U.E.*) — FSS

MISCELLANEOUS:

- Utility Pole
- Utility Pole with Base
- Utility Located Object
- Utility Traffic Signal Box — S
- Utility Unknown U/G Line — ?UTL
- U/G Tank; Water, Gas, Oil
- Underground Storage Tank, Approx. Loc. — UST
- A/G Tank; Water, Gas, Oil
- Geoenvironmental Boring
- U/G Test Hole (S.U.E.*)
- Abandoned According to Utility Records — AATUR
- End of Information — E.O.I.

6/2/99

PROJECT REFERENCE NO.	SHEET NO.
B-5117	1C-1
Location and Surveys	

SURVEY CONTROL SHEET B-5117

NAD 83/NSRS 2007 NC GRID

BL

POINT	DESC.	NORTH	EAST	ELEVATION	L STATION	OFFSET
1	B5117- BL1	305560.0998	2211988.0117	31.60	16+08.50	16.73 LT
2	B5117- BL2	306001.5335	2211525.5242	31.17	22+44.90	35.63 LT
3	B5117- BL3	306334.7175	2211240.1540	29.33	26+78.07	58.88 LT
4	B5117- BL4	306891.2126	2210963.9252	32.47	32+92.70	19.28 LT
5	B5117- BL5	307421.5317	2210734.9432	32.52	OUTSIDE PROJECT LIMITS	

****

BM1 ELEVATION = 29.48
N 306129 E 2211352
L STATION 24+50.00 90 LEFT
RR SPIKE IN BASE OF 18" HICKORY TREE

****

L

TYPE	STATION	NORTH	EAST
POT	10+00.00	305153.9202	2212441.4113
PC	18+31.59	305725.6205	2211837.5050
PT	34+44.38	307037.5134	2210918.2770
POT	37+88.50	307353.1706	2210781.2367

FINAL ROW MARKER IRON PIN AND CAP-E

ALIGN	STATION	OFFSET	NORTH	EAST
L	16+00.00	30.00	305588.1929	2212026.3122
L	18+31.59	50.00	305761.9307	2211871.8789
L	22+50.00	50.00	306061.1429	2211587.2157
L	22+50.00	75.00	306077.4043	2211606.2043
L	29+00.00	50.00	306580.3807	2211211.0644
L	29+00.00	75.00	306593.3557	2211232.4337
L	36+50.00	30.00	307238.0715	2210863.9113
L	36+50.00	50.00	307246.0362	2210882.2570
L	34+44.38	50.00	307057.4250	2210964.1412
L	16+00.00	50.00	305602.7170	2212040.0618

FINAL ROW MARKER PERMANENT EASEMENT-E

ALIGN	STATION	OFFSET	NORTH	EAST
L	25+30.00	-110.00	306181.9595	2211286.3505
L	25+30.00	-70.65	306205.4011	2211317.9546
L	27+25.00	-110.00	306345.7316	2211170.9560
L	27+25.00	-71.09	306367.3611	2211203.2999
L	35+15.00	65.00	307128.1762	2210949.7777
L	34+80.00	65.00	307096.0713	2210963.7158
L	34+80.00	50.00	307090.0978	2210949.9565
L	35+15.00	50.00	307122.2028	2210936.0184
L	35+15.00	-60.00	307078.3972	2210835.1171
L	35+15.00	-30.00	307090.3442	2210862.6356
L	34+90.00	-30.00	307067.4120	2210872.5914
L	34+90.00	-60.00	307055.4651	2210845.0729

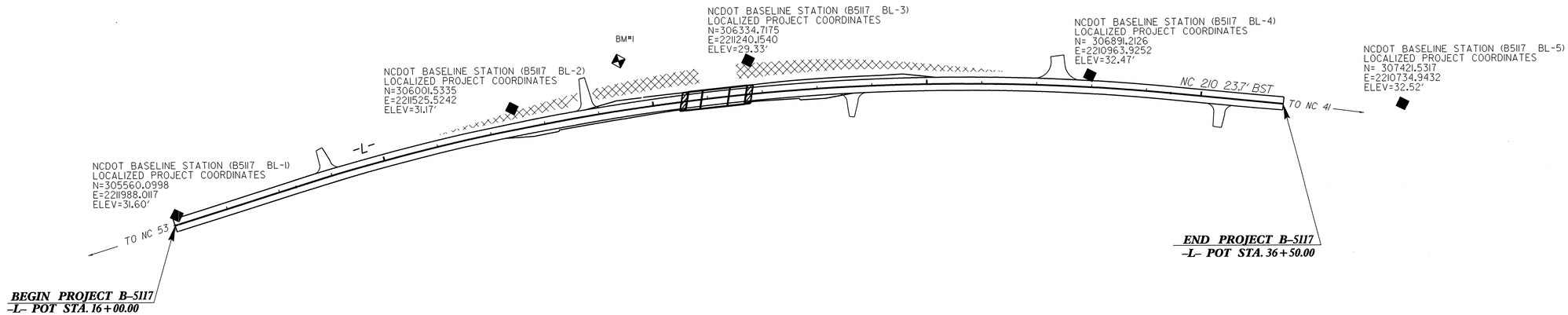

DATUM DESCRIPTION

THE LOCALIZED COORDINATE SYSTEM DEVELOPED FOR THIS PROJECT IS BASED ON THE STATE PLANE COORDINATES ESTABLISHED BY NCDOT FOR MONUMENT "B5117-2" WITH NAD 83/NSRS 2007 STATE PLANE GRID COORDINATES OF NORTHING: 305142.647(ft) EASTING: 2212481.208(ft) ELEVATION: 31.35(ft) THE AVERAGE COMBINED GRID FACTOR USED ON THIS PROJECT (GROUND TO GRID) IS: 0.9999427933 THE N.C. LAMBERT GRID BEARING AND LOCALIZED HORIZONTAL GROUND DISTANCE FROM "B5117-2" TO -L- STATION 16+00.00 IS N 48°17'39.0" W 636.94' ALL LINEAR DIMENSIONS ARE LOCALIZED HORIZONTAL DISTANCES VERTICAL DATUM USED IS NAVD 88

NOTE: DRAWING NOT TO SCALE

NOTES:

1. *THE CONTROL DATA FOR THIS PROJECT CAN BE FOUND ELECTRONICALLY BY SELECTING PROJECT CONTROL DATA AT: HTTPS://CONNECT.NCDOT.GOV/RESOURCES/LOCATION/PAGES/DEFAULT.ASPX*

   THE FILES TO BE FOUND ARE AS FOLLOWS: B5117_LS_CONTROL.TXT

   SITE CALIBRATION INFORMATION HAS NOT BEEN PROVIDED FOR THIS PROJECT. IF FURTHER INFORMATION IS NEEDED, PLEASE CONTACT THE LOCATION AND SURVEYS UNIT.

© *INDICATES GEODETIC CONTROL MONUMENTS USED OR SET FOR HORIZONTAL PROJECT CONTROL BY THE NCDOT LOCATION AND SURVEYS UNIT.*
PROJECT CONTROL ESTABLISHED USING GLOBAL POSITIONING SYSTEM.
NETWORK ESTABLISHED FROM EXISTING HARN MONUMENTATION
SEE GPS CALIBRATION SHEET FOR HORIZONTAL AND VERTICAL COORDINATE VALUES.

28-MAY-2014 08:26
C:\Projects\B5117_rdy_1C-1.dgn
$$$$USERNAME$$$$

PROJECT REFERENCE NO.	SHEET NO.
B-5117	2A-1
ROADWAY DESIGN ENGINEER	PAVEMENT DESIGN ENGINEER

NORTH CAROLINA PROFESSIONAL SEAL 16378 ENGINEER REKHA V. PATEL 6/27/14

NORTH CAROLINA PROFESSIONAL SEAL 22886 ENGINEER CLARK S. MORRISON 5/30/14

PAVEMENT SCHEDULE

C1	PROP. APPROX. 1½" ASPHALT CONCRETE SURFACE COURSE, TYPE S9.5B, AT AN AVERAGE RATE OF 168 LBS. PER SQ. YD.
C2	PROP. APPROX. 3" ASPHALT CONCRETE SURFACE COURSE, TYPE S9.5B, AT AN AVERAGE RATE OF 168 LBS. PER SQ. YD. IN EACH OF TWO LAYERS.
C3	PROP. VAR. DEPTH ASPHALT CONCRETE SURFACE COURSE, TYPE S9.5B, AT AN AVERAGE RATE OF 112 LBS. PER SQ. YD. PER 1" DEPTH TO BE PLACED IN LAYERS NOT LESS THAN 1½" OR GREATER THAN 2" IN DEPTH.
D1	PROP. APPROX. 2½" ASPHALT CONCRETE INTERMEDIATE COURSE, TYPE I19.0B, AT AN AVERAGE RATE OF 285 LBS. PER SQ. YD.
D2	PROP. VAR. DEPTH ASPHALT CONCRETE INTERMEDIATE COURSE,TYPE I19.0B, AT AN AVERAGE RATE OF 114 LBS. PER SQ. YD. PER 1" DEPTH TO BE PLACED IN LAYERS NOT LESS THAN 2½" IN OR GREATER THAN 4" IN DEPTH.
E1	PROP. APPROX. 4" ASPHALT CONCRETE BASE COURSE, TYPE B25.0B, AT AN AVERAGE RATE OF 456 LBS. PER SQ. YD.
E2	PROP. APPROX. 5" ASPHALT CONCRETE BASE COURSE, TYPE B25.0B, AT AN AVERAGE RATE OF 570 LBS. PER SQ. YD.
E3	PROP. VAR. DEPTH ASPHALT CONCRETE BASE COURSE, TYPE B25.0B, AT AN AVERAGE RATE OF 114 LBS. PER SQ. YD. PER 1" DEPTH TO BE PLACED IN LAYERS NOT TO LESS THAN 4" OR GREATER THAN 5½" IN DEPTH.
R1	SHOULDER BERM GUTTER
T	EARTH MATERIAL
U	EXISTING PAVEMENT
W	VARIABLE DEPTH ASPHALT PAVEMENT (SEE WEDGING DETAIL)

NOTE: PAVEMENT EDGE SLOPES ARE 1:1 UNLESS SHOWN OTHERWISE

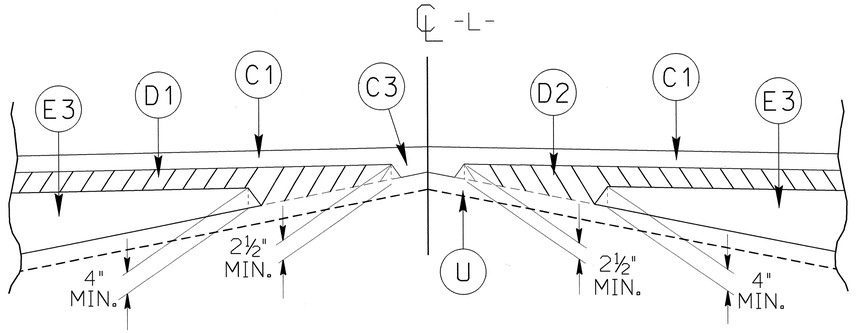

DETAIL SHOWING METHOD OF WEDGING

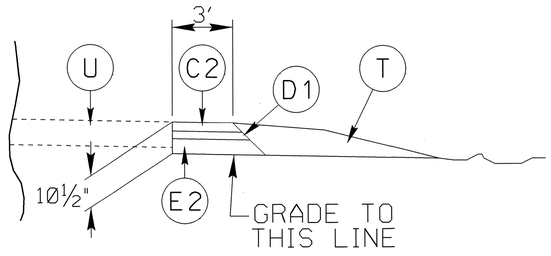

DETAIL 'A'

USE DETAIL 'A'

-L- STA. 19+17 TO -L- STA. 23+00 RT.
-L- STA. 29+75 TO -L- STA. 33+64 RT.

NOTE: (1) SEE TRANSPORTATION MANAGEMENT PLANS FOR LOCATION OF WEDGING THE EXISTING PAVEMENT FOR TRAFFIC CONTROL

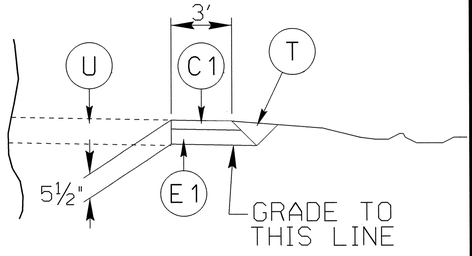

DETAIL 'B'

USE DETAIL 'B' (TEMPORARY PAVEMENT)

-L- STA. 23+00 TO -L- STA. 25+88 RT.
-L- STA. 26+57 TO -L- STA. 29+75 RT.

NOTES: (1) SEE TRANSPORTATION MANAGEMENT PLANS FOR LOCATION OF WEDGING THE EXISTING PAVEMENT FOR TRAFFIC CONTROL
(2) SEE TRANSPORTATION MANAGEMENT PLANS FOR LOCATION AND TEMPORARY PAVEMENT TIES TO EXISTING PAVEMENT

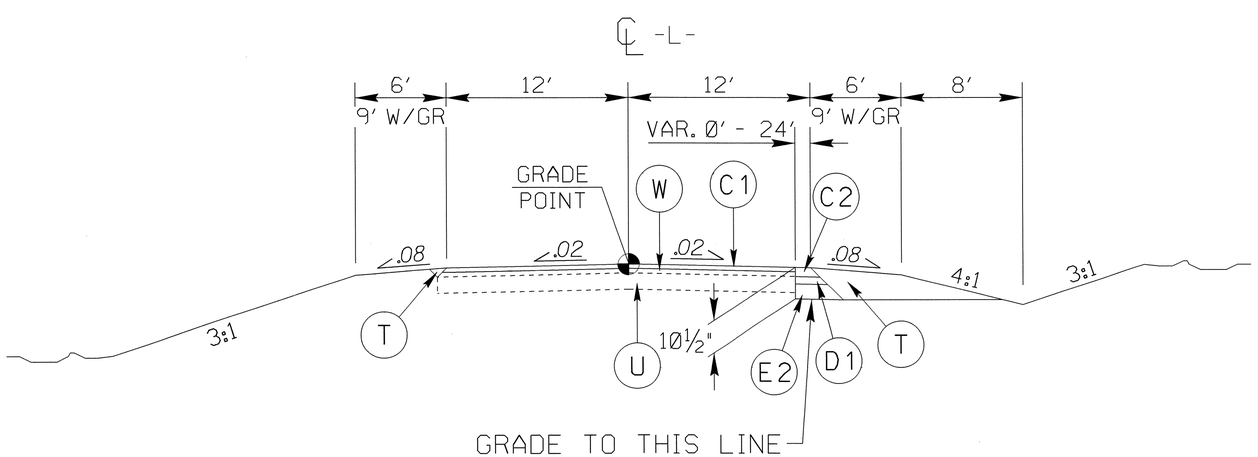

TYPICAL SECTION NO. 1

USE TYPICAL SECTION NO. 1

-L- STA. 16+50.00 TO -L- STA. 22+80.00
-L- STA. 30+00.00 TO -L- STA. 36+00.00

NOTES: (1) TRANSITION FROM EXISTING TO T.S.NO.1
-L- STA.16+00.00 TO -L- STA.16+50.00
(2) TRANSITION FROM T.S.NO.1 TO EXISTING
-L- STA.36+00.00 TO -L- STA.36+50.00

6/2/99
20-MAY-2014 15:04
R:\Roadway\Proj\b5117_rdy_typ.dgn
$$$$USERNAME$$$$

PROJECT REFERENCE NO.	SHEET NO.
B-5117	2A-2
ROADWAY DESIGN ENGINEER	PAVEMENT DESIGN ENGINEER

NORTH CAROLINA PROFESSIONAL SEAL 16378 ENGINEER REKHA V. PATEL 5-27-14

NORTH CAROLINA PROFESSIONAL SEAL 22896 ENGINEER CLARK S. MORRISON 5/30/14

PAVEMENT SCHEDULE	
C2	3" TYPE S9.5B
C3	VAR. DEPTH TYPE S9.5B
D1	2½" TYPE I19.0B
E2	5" TYPE B25.0B
E3	VAR. DEPTH TYPE B25.0B
R1	SHOULDER BERM GUTTER
T	EARTH MATERIAL

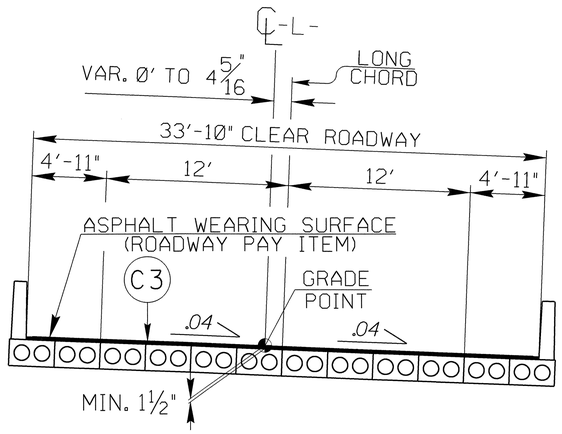

DETAIL SHOWING ASPHALT WEARING SURFACE ON CORED SLAB BRIDGE

-L- STA. 25+62.21 TO -L- STA. 26+69.79

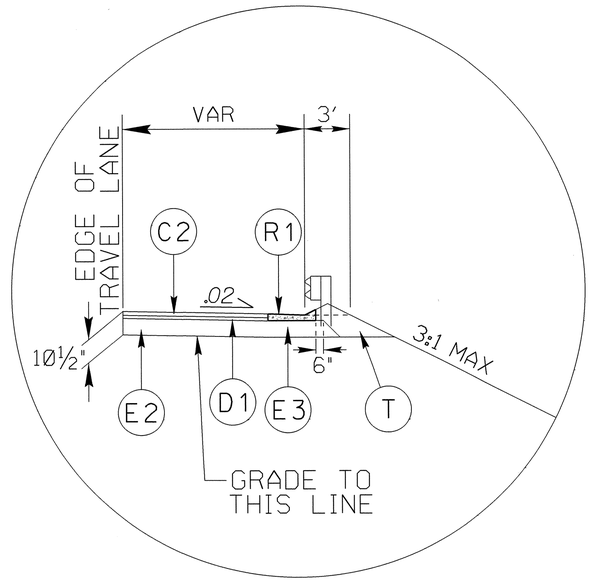

INSET NO. 1

INSET NO. 1

Use with Typical Section No. 2

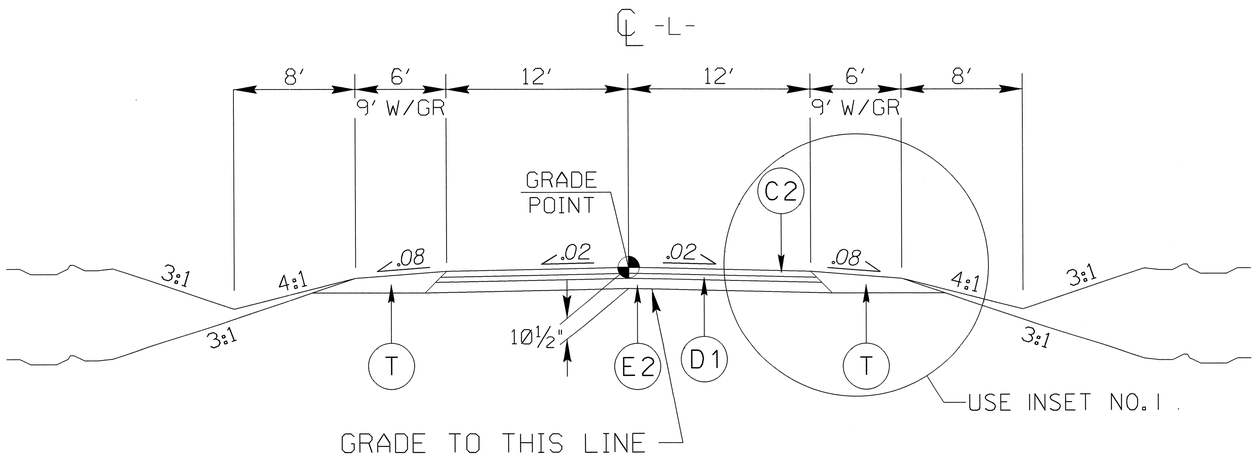

TYPICAL SECTION NO. 2

USE TYPICAL SECTION NO. 2

-L- STA. 22+80.00 TO -L- STA. 25+62.21 (BEGIN BRIDGE)
-L- STA. 26+69.79 (END BRIDGE) TO -L- STA. 30+00.00

USE INSET NO. 1 FOR:

-L- STA. 23+23.00 TO -L- STA. 25+46.55 (RT.)
-L- STA. 26+76.58 TO -L- STA. 27+67.00 (RT.)

6/2/99

20-MAY-2014 15:04
R:\Roadway\Proj\b5117_rdy_typ.dgn
$$$$USERNAME$$$$

PROJECT REFERENCE NO.	SHEET NO.
B-5117	2B-1

ROADWAY DESIGN ENGINEER

NORTH CAROLINA PROFESSIONAL SEAL 16378 ENGINEER REKHA V. PATEL

6/24/14

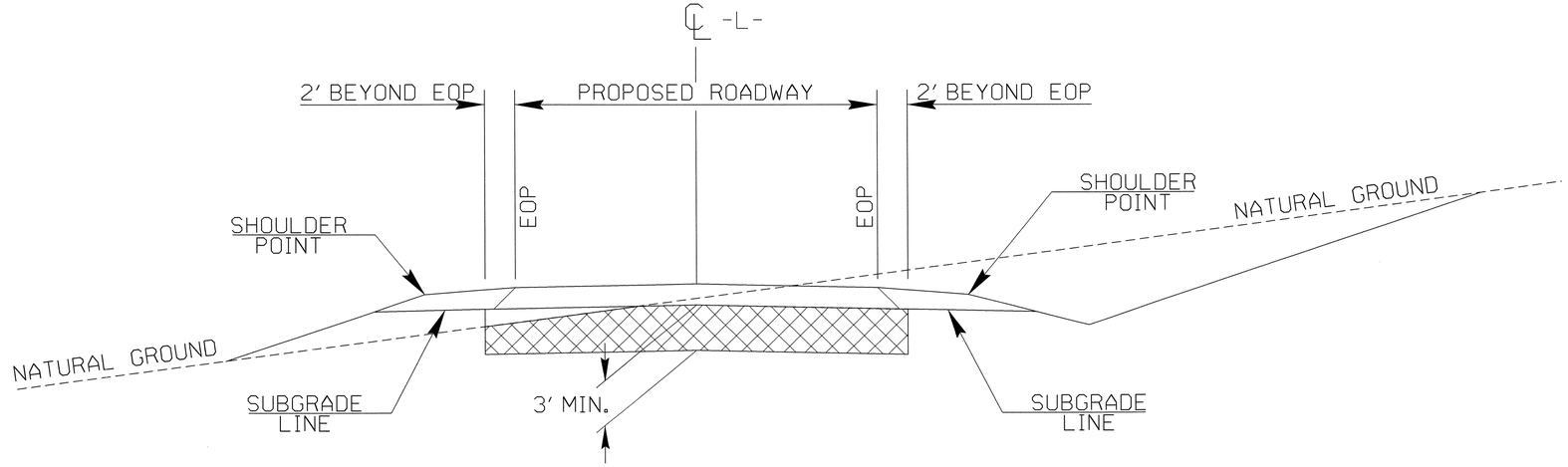

DETAIL NO. 1 FOR UNDERCUT

USE DETAIL NO. 1 FOR:

-L- STA. 28+10.00 TO -L- STA. 30+00.00

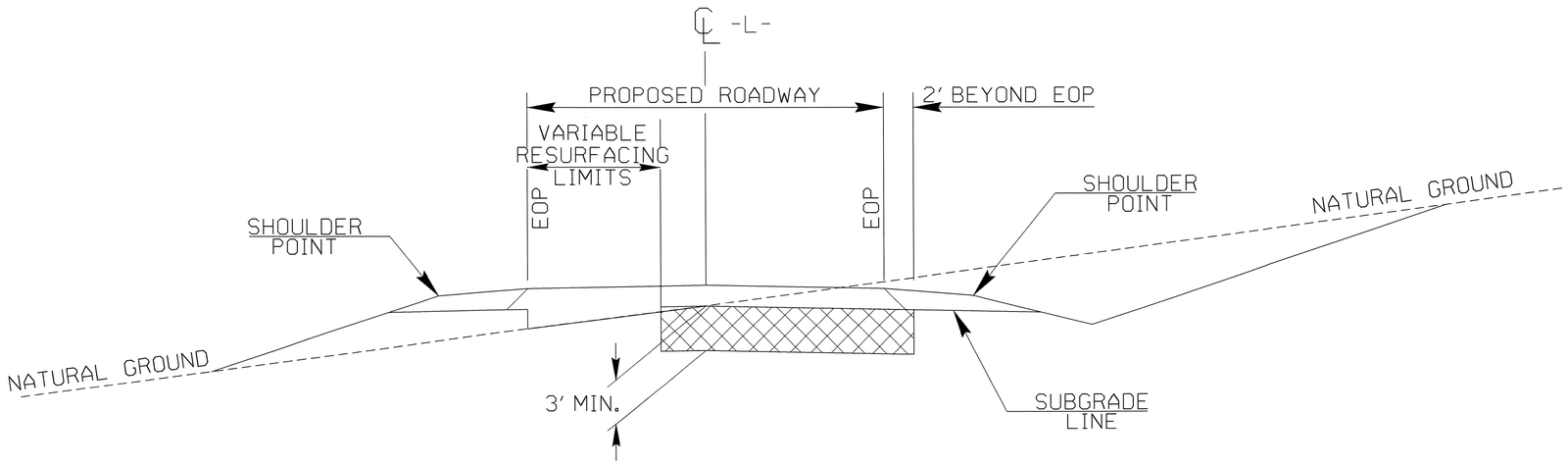

DETAIL NO. 2 FOR UNDERCUT

USE DETAIL NO. 2 FOR:

-L- STA. 30+00.00 TO -L- STA. 32+90.00

6/2/99

14-MAY-2014 15:08
R:\Roadway\Proj\b5117_rdy_Undercut_dtl.dgn
$$$$USERNAME$$$$

PROJECT REFERENCE NO.	SHEET NO.
B-5117	2C-1

STATE OF NORTH CAROLINA DEPT. OF TRANSPORTATION DIVISION OF HIGHWAYS RALEIGH, N.C.
ENGLISH DETAIL DRAWING FOR STRUCTURE ANCHOR UNITS GUARDRAIL ANCHOR UNIT, TYPE III FOR ATTACHMENT TO RAIL ON BRIDGE - REGIONAL TIER
SHEET 2 OF 7 862d03

NOTE:
**POST NOT REQUIRED FOR SKEW ANGLES GREATER THAN 150° OR LESS THAN 30° UNLESS OTHERWISE DIRECTED BY THE ENGINEER.
*THE DISTANCE FROM END OF BRIDGE RAIL TO CENTER LINE OF THE FIRST POST SHOULD BE 11½" IF CONCRETE BACKWALL IS NOT PRESENT.
-SHOULDER BERM GUTTER MUST BE INSTALLED TO THE LIMITS 8" x 4" LIP CURB IS SHOWN IF ANCHOR UNIT IS NOT ADJACENT TO AN APPROACH SLAB.
-MEASURE GUARDRAIL HEIGHT FROM THE TOP OF ADJACENT SURFACE (SHOULDER, BERM, OR GUTTER).
-LAP JOINTS IN THE DIRECTION OF TRAFFIC FLOW.
-SEE SHEET 5 FOR POST SECTIONS 1 THRU 9.

GUARDRAIL ANCHOR UNIT, TYPE III FOR ATTACHMENT TO RAIL ON BRIDGE - REGIONAL TIER

STATE OF
NORTH CAROLINA
DEPT. OF TRANSPORTATION
DIVISION OF HIGHWAYS
RALEIGH, N.C.

ENGLISH DETAIL DRAWING FOR
STRUCTURE ANCHOR UNITS
GUARDRAIL ANCHOR UNIT, TYPE III FOR ATTACHMENT TO RAIL ON BRIDGE - REGIONAL TIER

SHEET 2 OF 7 **862d03**

STATE OF NORTH CAROLINA DEPT. OF TRANSPORTATION DIVISION OF HIGHWAYS RALEIGH, N.C.
ENGLISH DETAIL DRAWING FOR STRUCTURE ANCHOR UNITS GUARDRAIL ANCHOR UNIT, TYPE III
SHEET 3 OF 7 862d03

NOTE: THE MID POST AND OFFSET BLOCK OF THE WTR SECTION WILL REQUIRE SPECIAL BOLT HOLE DRILLING IN THE THRIE BEAM OFFSET BLOCK AND LINE POST.

STATE OF
NORTH CAROLINA
DEPT. OF TRANSPORTATION
DIVISION OF HIGHWAYS
RALEIGH, N.C.

ENGLISH DETAIL DRAWING FOR
STRUCTURE ANCHOR UNITS
GUARDRAIL ANCHOR UNIT, TYPE III

SHEET 3 OF 7 **862d03**

CONTRACT STANDARDS AND DEVELOPMENT UNIT
Office 919-707-6950 FAX 919-250-4119

SEE TITLE BLOCK

ORIGINAL BY: J HOWERTON DATE: 06-22-12
MODIFIED BY: DATE:
CHECKED BY: DATE:
FILE SPEC.:

$$$$$$SYSTIME$$$$$
$$$$$$$$$$$DGN$$$$$$$$$$$$$$$$
$$$$$USERNAME$$$$

PROJECT REFERENCE NO.	SHEET NO.
B-5117	2C-2

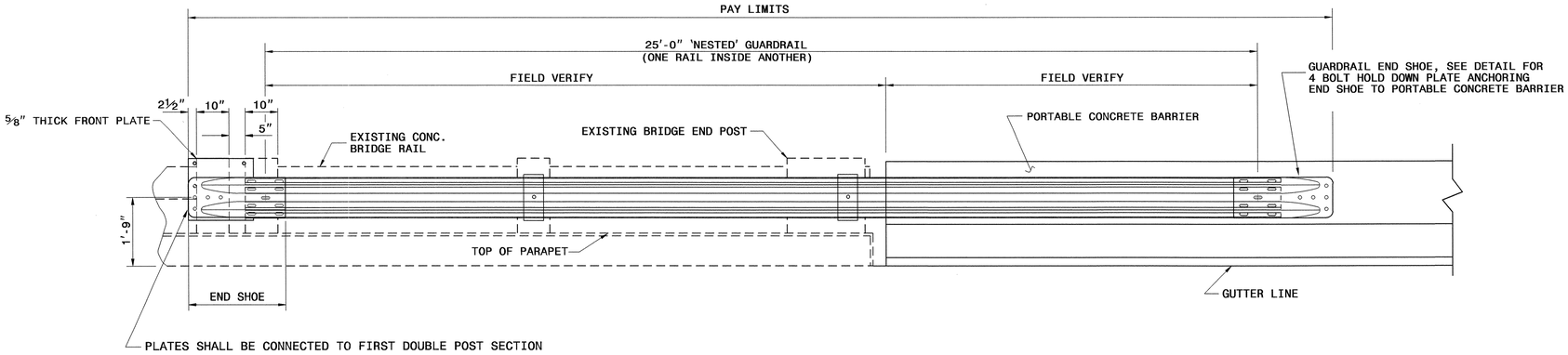

ELEVATION VIEW

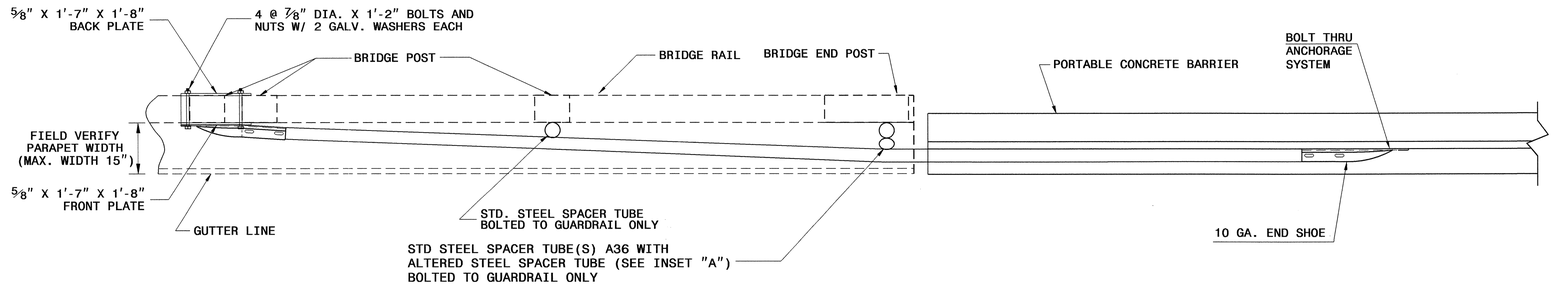

PLAN VIEW

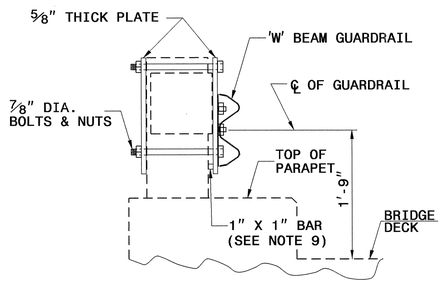

SECTION VIEW

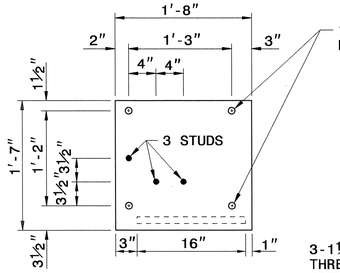

FRONT VIEW

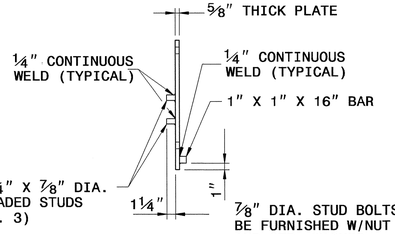

SIDE VIEW

STUDS MAY BE ADJUSTED TO MEET FIELD CONDITIONS

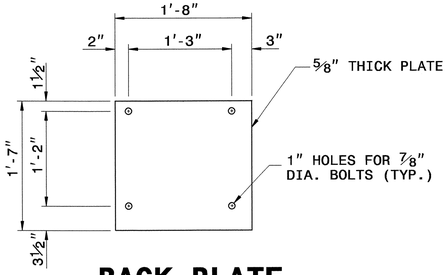

BACK PLATE

FRONT PLATE

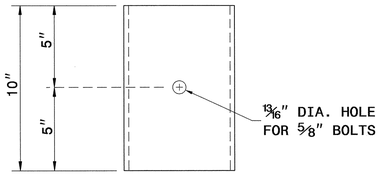

FRONT VIEW

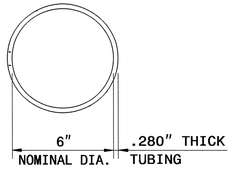

PLAN VIEW

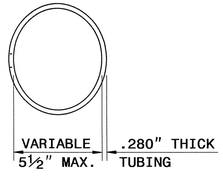

PLAN VIEW
INSET "A"

STEEL SPACER TUBE

NOTES FOR 4 BOLT HOLD DOWN PLATE

THE GUARDRAIL ANCHOR ASSEMBLY SHALL CONSIST OF A ¼" HOLD DOWN PLATE AND 4 - ⅞" DIA. BOLTS WITH NUTS AND WASHERS.

THE HOLD-DOWN PLATE SHALL CONFORM TO AASHTO M270 GRADE 36. AFTER FABRICATION, THE HOLD-DOWN PLATE SHALL BE HOT-DIP GALVANIZED IN ACCORDANCE WITH AASHTO M111.

AFTER INSTALLATION, THE EXPOSED THREAD OF THE BOLT SHALL BE BURRED WITH A SHARP POINTED TOOL. THE 1¼" DIA. HOLES SHALL BE FORMED OR DRILLED WITH A CORE BIT. IMPACT TOOLS WILL NOT BE PERMITTED. ANY CONCRETE DAMAGED BY THIS WORK SHALL BE REPAIRED TO THE SATISFACTION OF THE ENGINEER.

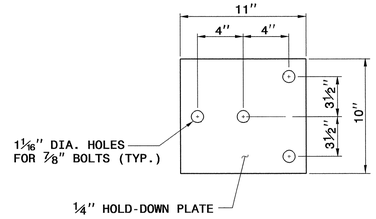

4 BOLT HOLD DOWN PLATE

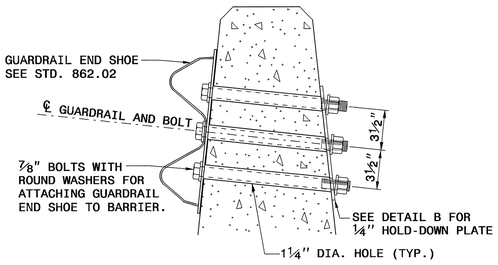

PART SECTION
OF BARRIER OR RAIL
THRU END SHOE SECTION AND
4 BOLT HOLD DOWN PLATE

GENERAL NOTES:

1. USE NUTS, BOLTS, AND WASHERS CONFORMING TO THE REQUIREMENTS OF A.S.T.M. A-307 AND GALVANIZED IN ACCORDANCE WITH SECTION 1076 OF STAND. SPECS.
2. TAP NUTS FOR THE ⅞" DIA. STUDS AND BOLTS AFTER GALVANIZING SEE A.S.T.M. A-563.
3. USE PLATES AND TUBES CONFORMING TO THE REQUIREMENTS OF A.S.T.M. A-36 AND GALVANIZED AFTER FABRICATION IN ACCORDANCE WITH SECTION 1076 OF STAND. SPECS.
4. ADDITIONAL FIELD HOLES MAY BE DRILLED IN STEEL RAIL AS DIRECTED BY THE ENGINEER.
5. INSTALL FACE OF GUARDRAIL AS NEAR AS POSSIBLE TO PLUMB WITH THE PARAPET FACE AT BRIDGE END POST SPACER TUBE LOCATION BY USING STANDARD OR ALTERED SPACER TUBES OR A COMBINATION THEREOF OR AS DIRECTED BY THE ENGINEER. FOR VERY SMALL PARAPET WIDTHS, GUARDRAIL MAY BE INSTALLED AGAINST BRIDGE RAIL WITHOUT SPACER TUBES.
6. DO NOT DRILL BRIDGE RAIL IN ORDER TO INSTALL GUARDRAIL ANCHOR UNIT.
7. KEEP TOE OF PORTABLE CONCRETE BARRIER FLUSH WITH FACE OF PARAPET.
8. ATTACH 1" X 1" BAR AND THREADED STUDS TO PLATE WITH ¼" WELDS ALL AROUND.
9. 1" X 1" BAR MAY NOT BE NEEDED ON BRIDGE RAILS WHERE FACE OF RAIL DOES NOT PROJECT BEYOND FACE OF POST.

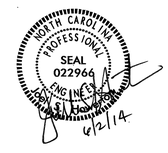

CONTRACT STANDARDS
AND DEVELOPMENT UNIT
Office 919-707-6950 FAX 919-250-4119

TEMPORARY ANCHOR UNIT TYPE W-BEAM

ORIGINAL BY: E.E. WARD DATE: 4-03
MODIFIED BY: E.E. WARD DATE: 6-04
CHECKED BY: DATE: 2/21/14
FILE SPEC.: \usr\details\stand\862stds\anc.dgn

COMPUTED BY: MJJ DATE: 04/24/2014
CHECKED BY: PWR DATE: 04/24/2014

"N" = DISTANCE FROM EDGE OF LANE TO FACE OF GUARDRAIL.
TOTAL SHOULDER WIDTH = DISTANCE FROM EDGE OF TRAVEL LANE TO SHOULDER BREAK POINT.
FLARE LENGTH = DISTANCE FROM LAST SECTION OF PARALLEL GUARDRAIL TO END OF GUARDRAIL.
W = TOTAL WIDTH OF FLARE FROM BEGINNING OF TAPER TO END OF GUARDRAIL.
G = GATING IMPACT ATTENUATOR TYPE 350
NG = NON-GATING IMPACT ATTENUATOR TYPE 350

STATE OF NORTH CAROLINA
DIVISION OF HIGHWAYS

PROJECT REFERENCE NO.	SHEET NO.
B-5117	3B-1

GUARDRAIL SUMMARY

SURVEY LINE	BEG. STA.	END STA.	LOCATION	LENGTH			WARRANT POINT		"N" DIST. FROM E.O.L.	TOTAL SHOULDER WIDTH	FLARE LENGTH		W		ANCHORS							IMPACT ATTENUATOR TYPE 350			SINGLE FACED CONCRETE BARRIERS	REMOVE EXISTING GUARDRAIL		REMARKS
				STRAIGHT	SHOP CURVED	DOUBLE FACED	APPROACH END	TRAILING END			APPROACH END	TRAILING END	APPROACH END	TRAILING END	GRAU 350 TL-3	TYPE III						PERMITTED NO.	PERMITTED G	PERMITTED NG				
-L-	22+63.80	25+57.55	RT	293.75			25+57.55		6'	9'	50.00	75.00	1.00	1.50	1	1												
-L-	24+23.09	25+66.84	LT	143.75				25+66.84	6'	9'	75.00	50.00	1.50	1.00	1	1												
-L-	26+65.58	28+21.83	RT	156.25				26+65.58	6'	9'	75.00	50.00	1.50	1.00	1	1												
-L-	26+73.98	29+67.73	LT	293.75			26+73.98		6'	9'	50.00	75.00	1.00	1.50	1	1												
		SUBTOTAL		887.50 Ft.										TOTALS	4	4												
		LESS ANCHOR DEDUCTIONS																										
		GRAU-350 TL-3	4 @ 50.00 Ft.	200.00 Ft.																								
		TYPE III	4 @ 18.75 Ft.	75.00 Ft.																								
		SUBTOTAL		-275.00 Ft.																								
		PROJECT TOTAL		612.50 Ft.																								
		SAY		625.00 Ft.																								
		ADDITIONAL GUARDRAIL POSTS		5 EA.																								

SUMMARY OF PAVEMENT REMOVAL
IN SQUARE YARDS

BEGIN STATION	END STATION	LOCATION	ASPHALT REMOVAL
-L- STA. 19+18.00	-L- STA. 25+88.00	LT	1,256.00
-L- STA. 26+57.00	-L- STA. 33+75.00	LT	1,397.00
-L- STA. 23+00	-L- STA. 25+88	LT	96.00
-L- STA. 26+57	-L- STA. 29+75	LT	106.00
TOTAL			2,855.00
SAY			2,900.00

TEMPORARY GUARDRAIL SUMMARY
(PER TRANSPORTATION MANAGEMENT PLANS)

ANCHOR TYPE	LOCATION	ANCHOR TOTAL	COMMENTS
TYPE W-BEAM	SEE TMP-5	2 EA	SEE SHEET 2C-2

SUMMARY OF EARTHWORK
IN CUBIC YARDS

LOCATION	UNCLASSIFIED EXCAVATION	UNDERCUT	EMBT + %	BORROW	WASTE
-L- STA. 16+00.00 TO -L- STA. 25+62.21	872		3,439	2,567	
SUBTOTAL 1	872		3,439	2,567	
-L- STA. 26+69.79 TO -L- STA. 36+50.00	1,047	600	5,476	5,329	1,500
SUBTOTAL 2	1,047	600	5,476	5,329	1,500
PROJECT SUBTOTAL	1,919	600	8,915	7,896	1,500
MATERIAL FOR SHOULDER CONSTRUCTION			875	875	
ADDITIONAL UNDERCUT		600	750	750	600
PROJECT TOTAL	1,919	1,200	10,540	9,521	2,100
EST. 5% TO REPLACE TOPSOIL ON BORROW PIT	0			476	0
GRAND TOTAL	1,919	1,200	10,540	9,997	2,100
SAY	1,950 CY			10,075 CY	

NOTE: Earthwork quantities are calculated by the Roadway Design Unit. These earthwork quantities are based in part on subsurface data provided by the Geotechnical Engineering Unit.

27-MAY-2014 11:40
R:\Roadway\Projects\b5117_rdy_sum.dgn
$$$$USERNAME$$$$

COMPUTED BY:	MJJ	DATE:	04/24/2014
CHECKED BY:	PWR	DATE:	04/24/2014

STATE OF NORTH CAROLINA
DIVISION OF HIGHWAYS

PROJECT REFERENCE NO.	SHEET NO.
B-5117	3D-1

NOTE: Invert Elevations are for Bid Purposes only and shall not be used for project construction stakeout. See "Standard Specifications For Roads and Structures, Section 300-5".

SUB-REGIONAL & REGIONAL LIST OF PIPES, ENDWALLS, ETC. (FOR PIPES 48" & UNDER)

STATION / SIZE / THICKNESS OR GAUGE	LOCATION (LT,RT, OR CL)	STRUCTURE NO. FROM	STRUCTURE NO. TO	TOP ELEVATION	INVERT ELEVATION	INVERT ELEVATION	SLOPE CRITICAL	DRAINAGE PIPE (RCP, CSP, CAAP, HDPE, or PVC) 15"	18"	24"	30"	36"	42"	48"	DO NOT USE RCP	DO NOT USE CSP	DO NOT USE CAAP	DO NOT USE HDPE
-L- 23+81	LT.	0401							48'							X		
-L- 24+10	RT.	0501		29.78	24.78													
	RT.	0501	0502		24.78	24.49		20'								X		
-L- 25+27	RT.	0503		30.07	23.07													
	RT.	0503	0504		23.07	22.51		28'								X		
-L- 26+86	RT.	0505		30.72	21.72													
	RT.	0505	0506		21.72	21.50		28'								X		
-L- 28+64	RT.	0511						36'								X		
		0507	0510		26.50	26.10												
-L- 35+36	RT.	0512							44'							X		
-L- 34+00	RT.																	
PROJECT TOTALS								112'	92'									

STATION	C.S. PIPE 15" .064	18" .064	24" .064	30" .079	36" .079	42" .109	48" .109	R.C. PIPE (CLASS III) 15"	18"	24"	30"	36"	42"	48"	R.C. PIPE (CLASS IV) 15"	18"	24"	30"	36"	42"	48"				15" SIDE DRAIN PIPE	18" SIDE DRAIN PIPE
-L- 23+81																										
-L- 24+10																										
-L- 25+27																										
-L- 26+86																										
-L- 28+64																										
																			84'							
-L- 35+36																										
-L- 34+00		30'																								
PROJECT TOTALS		30'																		84'						

STATION	ENDWALLS STD. 838.01, STD. 838.11 OR STD. 838.80 (UNLESS NOTED OTHERWISE) CU. YDS. R.C.P.	C.S.P.	QUANTITIES FOR DRAINAGE STRUCTURES PER EACH (0' THRU 5.0')	LIN. *FT. A 5.0' THRU 10.0'	B 10.0' AND ABOVE	C.B. STD. 840.01 OR STD. 840.02	FRAME, GRATES AND HOOD STANDARD 840.03 TYPE OF GRATE E	F	G	CONCRETE TRANSITIONAL SECTION CATCH BASIN	DROP INLET	D.I. STD. 840.14 OR 840.15	D.I. FRAME AND GRATES STD. 840.16	G.D.I. TYPE "A" STD. 840.17 OR 840.26	G.D.I. TYPE "B" STD. 840.18 OR 840.27	G.D.I. TYPE "D" STD. 840.19 OR 840.28	G.D.I. (W.S.F.G.) FRAME WITH TWO GRATES STD. 840.20	G.D.I. (N.S.F.G.) FRAME WITH TWO GRATES STD. 840.29	TRAFFIC BEARING D.I. STD. 840.35 OR 840.46					DRAINAGE PIPE ELBOWS NO. & SIZE	CONC. COLLARS CL. "B" C.Y. STD 840.72	CONC. & BRICK PIPE PLUG, C.Y. STD. 840.71	PIPE REMOVAL LIN.FT.	REMARKS
-L- 23+81																												18" PIPE
-L- 24+10			1															1	1									TB2GI
																												15" PIPE
-L- 25+27			1	2														1	1									TB2GI
																												15" PIPE
-L- 26+86			1	4														1	1									TB2GI
																												15" PIPE
-L- 28+64																											20'	15" PIPE
	3.4																											36" RCP-IV W/HW
-L- 35+36																												18" PIPE
-L- 34+00																											30'	TEMPORARY 18" CMP SEE TMP-5
PROJECT TOTALS	3.4		3	6														3	3								50'	

ABBREVIATIONS

C.B.	CATCH BASIN
N.D.I.	NARROW DROP INLET
D.I.	DROP INLET
G.D.I.	GRATED DROP INLET
G.D.I. (N.S.)	GRATED DROP INLET (NARROW SLOT)
J.B.	JUNCTION BOX
M.H.	MANHOLE
T.B.D.I.	TRAFFIC BEARING DROP INLET
T.B.J.B.	TRAFFIC BEARING JUNCTION BOX

COMPUTED BY: MJJ DATE: 04/24/2014
CHECKED BY: PWR DATE: 04/24/2014

STATE OF NORTH CAROLINA
DIVISION OF HIGHWAYS

PROJECT REFERENCE NO.	SHEET NO.
B-5117	3G-1

SUMMARY OF SUBSURFACE DRAINAGE
IN FEET

BEGIN STATION	END STATION	LOCATION	DRAIN TYPE * UD / BD / SD	LENGTH
		CONTINGENCY	SD	100.00
		TOTAL	SD	100.00

* UD = UNDERDRAIN
* BD = BLIND DRAIN
* SD = SUBSURFACE DRAIN

SUMMARY OF AGGREGATE SUBGRADE / STABILIZATION

BEGIN STATION	END STATION	AGGREGATE TYPE * ASU / AST	AGGREGATE THICKNESS (INCHES)	SHALLOW UNDERCUT (CY)	CLASS IV SUBGRADE STABILIZATION (TONS)	GEOTEXTILE FOR SOIL STABILIZATION (SY)	STABILIZER AGGREGATE (TONS)	CLASS IV AGGREGATE STABILIZATION (TONS)
-L- STA. 28+10	-L- STA. 32+90					1,000.00		
	EROSION CONTROL CONTINGENCY					100.00		
	CONTINGENCY					500.00		
			TOTAL (CY,TONS or SY)			1,600.00		

* ASU = AGGREGATE SUBGRADE
* AST = AGGREGATE STABILIZATION

19-MAY-2014 12:19
R:\Roadway\Proj\b5117_rdy_sum.dgn
$$$$USERNAME$$$$

RD253068,2/5/2014,R:\Roadway\Proj\ROWParcels.xls

PROJ. REFERENCE NO.	SHEET NO.
B-5117	3P-1

STATE OF NORTH CAROLINA
DIVISION OF HIGHWAYS

PARCEL INDEX SHEET

PARCEL No.	SHEET No.	PROPERTY OWNER NAME
1	4	CHESTER BARNHILL & CLAUDIA H.
2	4	TRIPLE B LAND COMPANY LLC,
3	4 & 5	L.G. BEATTY ESTATE
4	4 & 5	SLEEPY CREEK FARMS INC.
5	5	MARGARET BURNS CLAWSON

PARCEL No.	SHEET No.	PROPERTY OWNER NAME

PROJECT REFERENCE NO.	SHEET NO.
B-5117	4
R/W SHEET NO.	

ROADWAY DESIGN ENGINEER
NORTH CAROLINA PROFESSIONAL SEAL 16378 ENGINEER REKHA V. PATEL
Rekha V. Patel

HYDRAULICS ENGINEER
NORTH CAROLINA PROFESSIONAL SEAL 14482 ENGINEER JOSEPH W. DUNKERLEY
Joseph W. Dunkerley 6/3/14

REVISIONS

NAD 83/NSRS 2007

-L- CURVE DATA
PI Sta 26+49.09
Δ = 23° 06' 05.4" (RT)
D = 1° 25' 56.6"
L = 1,612.79'
T = 817.50'
R = 4,000.00'
SE = .04
RO = 120'

10+00 15+00 20+00

1
CHESTER BARNHILL
CLAUDIA H.

2
TRIPLE B LAND COMPANY LLC.

3
L.G. BEATTY ESTATE

4
SLEEPY CREEK FARMS INC.

N 49°10'11" W 442.02'
S 25°51'17" W 340.20'
S 25°51'17" W 340.33'
N 30°02'50" E 342.15'
S 31°49'24" W 308.26'

BL-1 BL-2

EXISTING R/W
TO HWY 53
NC 210 -L- N 46° 34' 09.3" W
23.7' BST
60.00'
18'
T FO
F
C
E
WOODS
TUE
+91.59
12'
EX. 15"
02.02
50' TAPER
+00 EX. R/W & 50'
+31.59 50'
+50 50' & 75'
+60 EX. R/W
+65 70'
+10 80'
+23.88 46'
+30 EX. R/W
+51 EXIST. R/W
+52.95 77'
+55 92'
+00 100'
(040)
78"
20'
R=15'
GRAU 350 TL-3
Special Cut Ditch See Detail "A"
-L- POT Sta.10+00.00
BEGIN PROJECT B-5117
-L- POT STA. 16+00.00
-L- PC Sta.18+31.59
5'x15' CLASS 'I' RIP RAP PAD EST. 5 TONS 19 SY GEOTEXTILE
SHOULDER BERM GUTTER -L- STA.23+23.00 TO BEGIN OF APPROACH SLAB (RT.)
-L- STA.24+00.00
SEE SHEET NO.5
MATCH LINE

DETAIL "A"
SPECIAL CUT DITCH
(Not to Scale)
Natural Ground
3:1
D
4:1 or Flatter
Front Ditch Slope
Min. D=1.0 Ft.
-L- STA. 16+50 TO -L- STA. 23+11 (RT.)

TEMPORARY SHORING

NOTES: (1) SEE SHEET 6 FOR -L- PROFILE
(2) SEE TMP PLANS FOR TEMPORARY SHORING REQUIRED FOR CONSTRUCTION

14-MAY-2014 15:08
R:\Roadway\PO\b5117_Rdy_psh4.dgn
$$$$USERNAME$$$$

PROJECT REFERENCE NO.	SHEET NO.
B-5117	5
R/W SHEET NO.	

ROADWAY DESIGN ENGINEER: NORTH CAROLINA PROFESSIONAL SEAL 16378 ENGINEER REKHA V. PATEL — 6-21-14

HYDRAULICS ENGINEER: NORTH CAROLINA PROFESSIONAL SEAL 14462 ENGINEER JOSEPH W. DUNNEWOLD — 6/3/14

REVISIONS

-L- CURVE DATA
PI Sta 26+49.09
Δ = 23° 06' 05.4" (RT)
D = 1° 25' 56.6"
L = 1,612.79'
T = 817.50'
R = 4,000.00'
SE = .04
RO = 120'

NAD 83/NSRS 2007

-L- STA. 24+00.00

25+00

30+00

35+00

4 SLEEPY CREEK FARMS INC.

5 MARGARET BURNS CLAWSON

3 L.G. BEATTY ESTATE

SEE SHEET NO.4

MATCH LINE

BL-3

BL-4

BL-5

BM#1 +08.28 81' -L- +15 EXIST. R/W

LAKE CREEK

BRIDGE #47

BRIDGE #48

IN NO WINGWALLS

GRAU. 350 TL-3

REMOVE

SOIL DR

CLASS 'II' RIP-RAP LEVELED WITH CLASS 'B' RIP RAP TO ELEV. 29.0 (STRUCTURE'S PAY ITEM)

CLASS 'I' RIP RAP EST.2 TONS 6 SY GEOTEXTILE

BEGIN BRIDGE -L- STA. 25+62.21

END BRIDGE -L- STA. 26+69.79

SHOULDER BERM GUTTER END OF APPROACH SLAB (RTJ TO -L- STA. 27+67.00

TOE PROTECTION SEE DETAIL "B" CLASS 'I' RIP RAP EST. 24 TONS EST. 35 SY GEOTEXTILE

CLASS 'II' RIP RAP LEVELED WITH CLASS 'B' RIP RAP TO ELEV. 29.0 (STRUCTURE'S PAY ITEM)

CLASS 'I' RIP RAP EST.2 TONS 6 SY GEOTEXTILE

5'x15' CLASS 'I' RIP RAP PAD EST. 5 TONS 19 SY GEOTEXTILE

-L- PT Sta. 34+44.38

OUTLET PROTECTION SEE DETAIL "C" CLASS 'I' RIP RAP EST. 6 TONS 15 SY GEOTEXTILE

CLASS 'I' RIP RAP EST.2 TONS 8 SY GEOTEXTILE

-L- POT Sta. 37+88.50

N 23° 28' 03.8" W 237' BST

NC 210 NC 41 8.5+/- MILES

EXISTING R/W

50' TAPER

WOODS

S 40°08'00" W 645.35'

N 81°47'00" E 62.35'

END PROJECT B-5117
-L- POT STA. 36+50.00

BEGIN APPROACH SLAB -L- STA. 25+51.25

END APPROACH SLAB -L- STA. 26+80.75

TYPE III — 4'-11" MIN. — 33'-10" — TYPE III

SKETCH SHOWING PAVEMENT/BRIDGE RELATIONSHIP (NOT TO SCALE)

DETAIL "B"
TOE PROTECTION
(Not to Scale)

NATURAL GROUND — d — 3:1 OR FLATTER — FILL SLOPE — GEOTEXTILE

d= 1.5 Ft.

Type of Liner= CL. 'I' Rip-Rap

-L- STA. 28+04 TO -L- STA. 28+34 (RT.)

DETAIL "C"
PIPE OUTLET CHANNEL
(Not to Scale)

Natural Ground — EXISTING BANK — D — EXISTING BANK — Natural Ground — GEOTEXTILE — CHANNEL BED (Variable)

Length= 12 Ft.
D= 3.0 Ft.
Est.= 6 Tons of Class 'I' Rip-Rap
Est.= 15 SY Geotextile

-L- STA. 34+93 (RT.)

TEMPORARY SHORING

NOTES: (1) SEE SHEET 6 FOR -L- PROFILE
(2) SEE SHEETS S-1 TO S-23 FOR STRUCTURE DETAILS
(3) SEE TMP PLANS FOR TEMPORARY SHORING REQUIRED FOR CONSTRUCTION

22-MAY-2014 jlc22
R:\Roadway\RD_Projects\b5117_Rdy_psh5.dgn
RD266401 5/22/2014 b5117_Rdy_psh5 nwroebester RD Oce860_34

PROJECT REFERENCE NO.	SHEET NO.
B-5117	6

ROADWAY DESIGN ENGINEER — NORTH CAROLINA PROFESSIONAL SEAL 16378 ENGINEER REKHA V. PATEL — 6/27/14

HYDRAULICS ENGINEER — NORTH CAROLINA PROFESSIONAL SEAL 14482 ENGINEER JOSEPH W. DUNNEHOO — 6/3/14

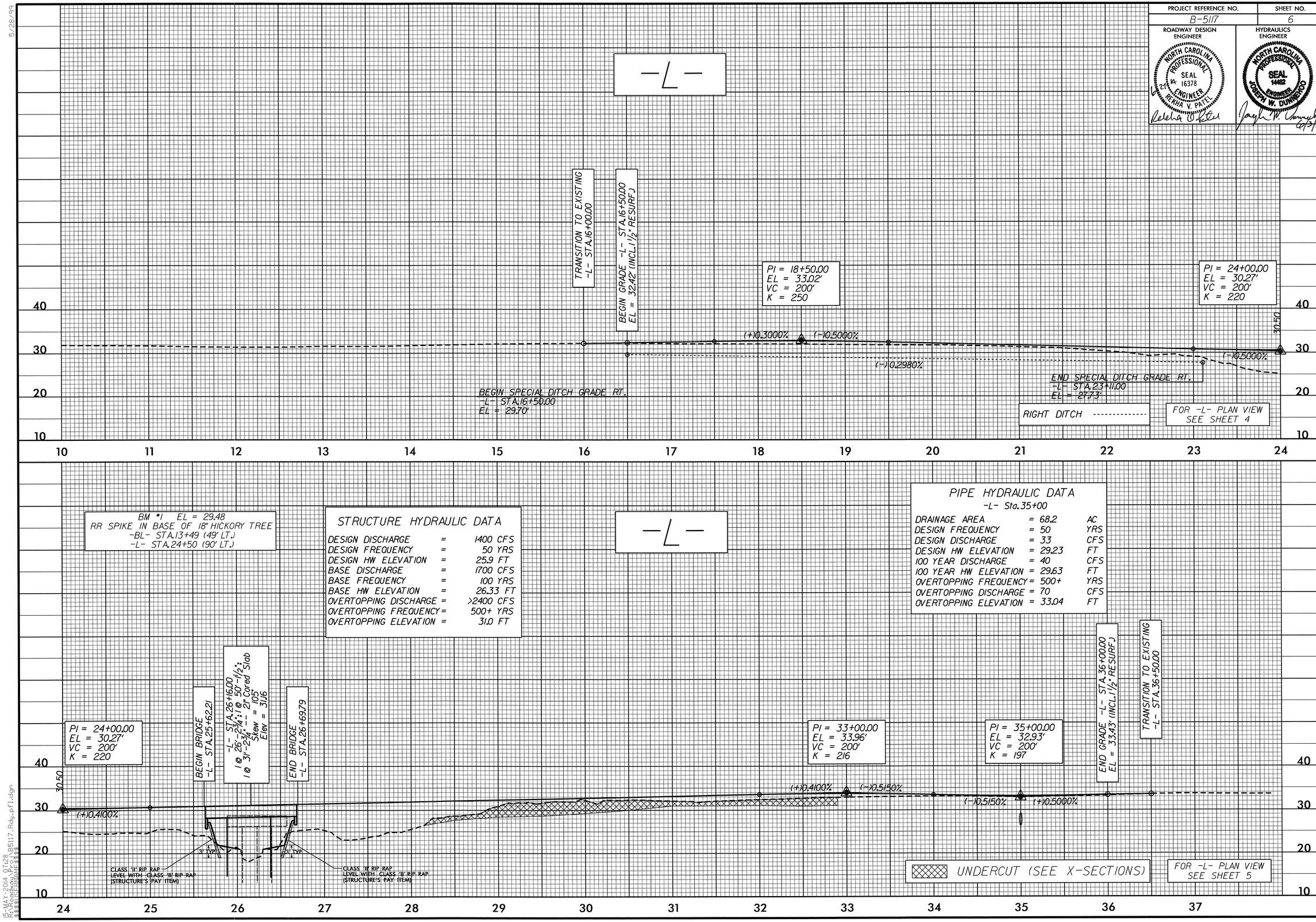

5/28/99

15-MAY-2014 07:28
R:\Roadway\Proj\B5117_Rdy_pfl.dgn
$$$$USERNAME$$$$

STATE OF NORTH CAROLINA
DIVISION OF HIGHWAYS

TRANSPORTATION MANAGEMENT PLAN

BLADEN COUNTY

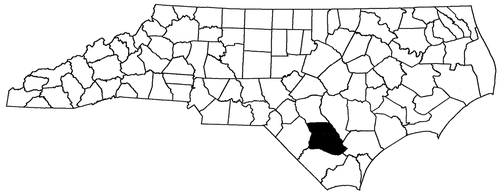

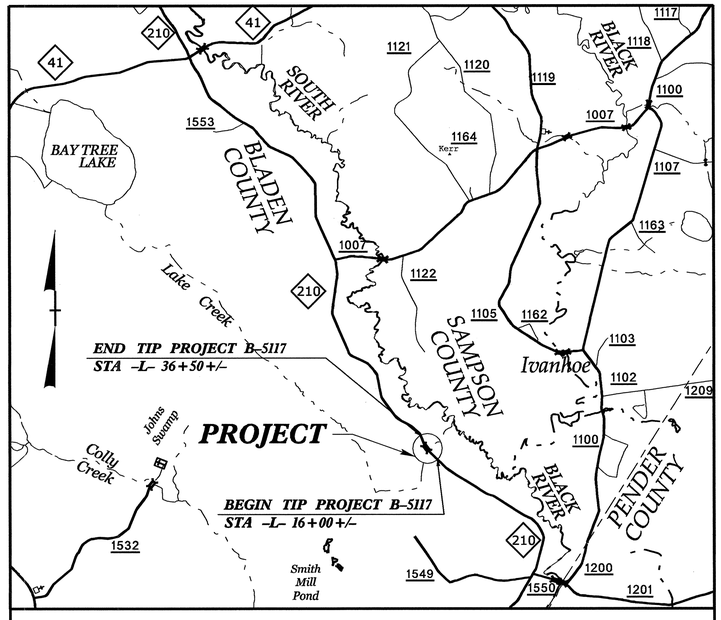

VICINITY MAP

LOCATION: BRIDGE NO. 47 OVER LAKE CREEK ON NC 210
TYPE OF WORK: GRADING, DRAINAGE, PAVING AND STRUCTURE

INDEX OF SHEETS

SHEET NO.	TITLE
TMP-1	TITLE SHEET, VICINITY MAP AND INDEX OF SHEETS
TMP-1A	LIST OF APPLICABLE ROADWAY STANDARD DRAWINGS, AND LEGEND
TMP-1B	TRANSPORTATION OPERATIONS PLAN: (PROJECT NOTES)
TMP-2	PORTABLE CONCRETE BARRIER AT TEMPORARY SHORING LOCATIONS DETAIL
TMP-2A	TEMPORARY SHORING DATA
TMP-3	TRANSPORTATION OPERATIONS PLAN: (WRITTEN PHASING)
TMP-4 TO TMP-5	TEMPORARY TRAFFIC CONTROL PHASE I DETAILS
TMP-6 TO TMP-7	TEMPORARY TRAFFIC CONTROL PHASE II DETAILS
TMP-8 TO TMP-9	TEMPORARY TRAFFIC CONTROL PHASE III DETAILS
TMP-10 TO TMP-15	CROSS SECTIONS

SHEET NO.
TMP-1

B-5117

TIP PROJECT:

WORK ZONE SAFETY & MOBILITY
"from the MOUNTAINS to the COAST"

N.C.D.O.T. WORK ZONE TRAFFIC CONTROL
1561 MAIL SERVICE CENTER (MSC) RALEIGH, NC 27699-1561
750 N. GREENFIELD PARKWAY, GARNER, NC 27529 (DELIVERY)
PHONE: (919) 773-2800 FAX: (919) 771-2745

J. S. BOURNE, P.E. — *STATE TRAFFIC MANAGEMENT ENGINEER*
J.S. KITE, P.E. — *TRAFFIC CONTROL PROJECT ENGINEER*
D.W. BISSETTE, P.E. — *TRAFFIC CONTROL PROJECT DESIGN ENGINEER*
L.K. DONALDSON, P.E. — *TRAFFIC CONTROL DESIGN ENGINEER*

DIVISION OF HIGHWAYS * STATE OF NORTH CAROLINA * DEPARTMENT OF TRANSPORTATION * WORK ZONE TRAFFIC CONTROL

Prepared in the Office of:
PROGRESSIVE DESIGN GROUP, INC.
ENGINEERS • CONSULTANTS

APPROVED: Jim Arey
DATE: 05/15/14

SEAL

NORTH CAROLINA PROFESSIONAL SEAL 025465 ENGINEER JIM AREY

PROJ. REFERENCE NO.	SHEET NO.
B-5117	TMP-1A

ROADWAY STANDARD DRAWINGS

THE FOLLOWING ROADWAY STANDARDS AS SHOWN IN "ROADWAY STANDARD DRAWINGS" - PROJECT SERVICES UNIT - N.C. DEPARTMENT OF TRANSPORTATION - RALEIGH, N.C., DATED JANUARY 2012 ARE APPLICABLE TO THIS PROJECT AND BY REFERENCE HEREBY ARE CONSIDERED A PART OF THESE PLANS:

STD. NO.	TITLE
1101.01	WORK ZONE ADVANCE WARNING SIGNS
1101.02	TEMPORARY LANE CLOSURES
1101.04	TEMPORARY SHOULDER CLOSURES
1101.05	WORK ZONE VEHICLE ACCESSES
1101.11	TRAFFIC CONTROL DESIGN TABLES
1110.01	STATIONARY WORK ZONE SIGNS
1110.02	PORTABLE WORK ZONE SIGNS
1115.01	FLASHING ARROW BOARDS
1130.01	DRUM
1135.01	CONES
1145.01	BARRICADES
1150.01	FLAGGING DEVICES
1160.01	TEMPORARY CRASH CUSHION
1165.01	WORK VEHICLE LIGHTING SYSTEMS AND TMA DELINEATION
1170.01	PORTABLE CONCRETE BARRIER
1180.01	SKINNY-DRUM
1205.01	PAVEMENT MARKINGS - LINE TYPES AND OFFSETS
1205.02	PAVEMENT MARKINGS - TWO LANE AND MULTILANE ROADWAYS
1205.12	PAVEMENT MARKINGS - BRIDGES
1250.01	RAISED PAVEMENT MARKERS - INSTALLATION SPACING
1251.01	RAISED PAVEMENT MARKERS - PERMANENT AND TEMPORARY
1261.01	GUARDRAIL AND BARRIER DELINEATORS - INSTALLATION SPACING
1261.02	GUARDRAIL AND BARRIER DELINEATORS - TYPES AND MOUNTING
1262.01	GUARDRAIL END DELINEATION

LEGEND

GENERAL

- DIRECTION OF TRAFFIC FLOW
- DIRECTION OF PEDESTRIAN TRAFFIC FLOW
- EXIST. PVMT.
- NORTH ARROW
- PROPOSED PVMT.
- TEMP. SHORING (LOCATION PURPOSES ONLY)
- WORK AREA
- REMOVAL
- TEMPORARY PAVEMENT
- TEMPORARY WEDGING

PAVEMENT MARKINGS

- EXISTING LINES
- TEMPORARY LINES

TRAFFIC CONTROL DEVICES

- BARRICADE (TYPE III)
- CONE
- DRUM SKINNY DRUM TUBULAR MARKER
- TEMPORARY CRASH CUSHION
- FLASHING ARROW BOARD
- FLAGGER
- LAW ENFORCEMENT
- TRUCK MOUNTED ATTENUATOR (TMA)
- CHANGEABLE MESSAGE SIGN

TEMPORARY SIGNING

- PORTABLE SIGN
- STATIONARY SIGN
- STATIONARY OR PORTABLE SIGN

PAVEMENT MARKERS

- CRYSTAL/CRYSTAL
- CRYSTAL/RED
- YELLOW/YELLOW

PAVEMENT MARKING SYMBOLS

- PAVEMENT MARKING SYMBOLS

TEMPORARY PAVEMENT MARKING SCHEDULE

PAVEMENT MARKINGS PAINT(4")

PA WHITE SOLID EDGE LINE
PI YELLOW DOUBLE CENTER

PLAN PREPARED IN THE OFFICE OF:
PROGRESSIVE DESIGN GROUP, INC.
ENGINEERS • CONSULTANTS

APPROVED: [signature] DATE: 05/15/14

SEAL
NORTH CAROLINA PROFESSIONAL SEAL 025465 ENGINEER TIM AREY

DIVISION OF HIGHWAYS
STATE OF NORTH CAROLINA
DEPARTMENT OF TRANSPORTATION
WORK ZONE TRAFFIC CONTROL

ROADWAY STANDARD DRAWINGS & LEGEND

PROJ. REFERENCE NO.	SHEET NO.
B-5117	TMP-1B

MANAGEMENT STRATEGIES

THE PROJECT WILL BE CONSTRUCTED USING A COMBINATION OF STAGED CONSTRUCTION AND LANE CLOSURES. TEMPORARY SHORING WILL BE USED TO MANAGE TRAFFIC OPERATIONS DURING CONSTRUCTION.

ACCESS TO DRIVEWAYS ALONG NC 210 ARE TO BE MAINTAINED AT ALL TIMES.

GENERAL NOTES

CHANGES MAY BE REQUIRED WHEN PHYSICAL DIMENSIONS IN THE DETAIL DRAWINGS, STANDARD DETAILS, AND ROADWAY DETAILS ARE NOT ATTAINABLE TO MEET FIELD CONDITIONS OR RESULT IN DUPLICATE OR UNDESIRED OVERLAPPING OF DEVICES. MODIFICATION MAY INCLUDE: MOVING, SUPPLEMENTING, COVERING, OR REMOVAL OF DEVICES AS DIRECTED BY THE ENGINEER.

THE FOLLOWING GENERAL NOTES APPLY AT ALL TIMES FOR THE DURATION OF THE CONSTRUCTION PROJECT EXCEPT WHEN OTHERWISE NOTED IN THE PLAN OR DIRECTED BY THE ENGINEER.

HAULING RESTRICTIONS

A) DO NOT CONDUCT ANY HAULING OPERATIONS AGAINST THE FLOW OF TRAFFIC OF AN OPEN TRAVELWAY UNLESS THE HAULING OPERATION IS PROTECTED BY BARRIER OR GUARDRAIL OR AS DIRECTED BY THE ENGINEER.

LANE AND SHOULDER CLOSURE REQUIREMENTS

B) REMOVE LANE CLOSURE DEVICES FROM THE LANE WHEN WORK IS NOT BEING PERFORMED BEHIND THE LANE CLOSURE OR WHEN A LANE CLOSURE IS NO LONGER NEEDED OR AS DIRECTED BY THE ENGINEER.

C) WHEN PERSONNEL AND/OR EQUIPMENT ARE WORKING WITHIN 15 FT OF AN OPEN TRAVEL LANE, CLOSE THE NEAREST OPEN SHOULDER USING ROADWAY STANDARD DRAWING NO. 1101.04 UNLESS THE WORK AREA IS PROTECTED BY BARRIER OR GUARDRAIL OR A LANE CLOSURE IS INSTALLED.

D) WHEN PERSONNEL AND/OR EQUIPMENT ARE WORKING ON THE SHOULDER ADJACENT TO AN UNDIVIDED FACILITY AND WITHIN 5 FT OF AN OPEN TRAVEL LANE, CLOSE THE NEAREST OPEN TRAVEL LANE USING ROADWAY STANDARD DRAWING NO. 1101.02 UNLESS THE WORK AREA IS PROTECTED BY BARRIER OR GUARDRAIL.

E) WHEN PERSONNEL AND/OR EQUIPMENT ARE WORKING WITHIN A LANE OF TRAVEL OF AN UNDIVIDED OR DIVIDED FACILITY, CLOSE THE LANE ACCORDING TO THE TRAFFIC CONTROL PLANS, ROADWAY STANDARD DRAWINGS, OR AS DIRECTED BY THE ENGINEER. CONDUCT THE WORK SO THAT ALL PERSONNEL AND/OR EQUIPMENT REMAIN WITHIN THE CLOSED TRAVEL LANE.

F) DO NOT WORK SIMULTANEOUSLY WITHIN 15 FT ON BOTH SIDES OF AN OPEN TRAVELWAY, RAMP, OR LOOP WITHIN THE SAME LOCATION UNLESS PROTECTED WITH GUARDRAIL OR BARRIER.

PAVEMENT EDGE DROP OFF REQUIREMENTS

G) BACKFILL AT A 6:1 SLOPE UP TO THE EDGE AND ELEVATION OF EXISTING PAVEMENT IN AREAS ADJACENT TO AN OPENED TRAVEL LANE THAT HAS AN EDGE OF PAVEMENT DROP-OFF AS FOLLOWS:

BACKFILL DROP-OFFS THAT EXCEED 2 INCHES ON ROADWAYS WITH POSTED SPEED LIMITS OF 45 MPH OR GREATER.

BACKFILL DROP-OFFS THAT EXCEED 3 INCHES ON ROADWAYS WITH POSTED SPEED LIMITS LESS THAN 45 MPH.

BACKFILL WITH SUITABLE COMPACTED MATERIAL, AS APPROVED BY THE ENGINEER, AT NO EXPENSE TO THE DEPARTMENT.

H) DO NOT EXCEED A DIFFERENCE OF 2 INCHES IN ELEVATION BETWEEN OPEN LANES OF TRAFFIC FOR NOMINAL LIFTS OF 1.5 INCHES. INSTALL ADVANCE WARNING "UNEVEN LANES" SIGNS (W8-11) 500 FT IN ADVANCE AND A MINIMUM OF EVERY HALF MILE THROUGHOUT THE UNEVEN AREA.

TRAFFIC PATTERN ALTERATIONS

I) NOTIFY THE ENGINEER THIRTY (30) CALENDAR DAYS PRIOR TO ANY TRAFFIC PATTERN ALTERATION.

SIGNING

J) INSTALL ADVANCE WORK ZONE WARNING SIGNS WHEN WORK IS WITHIN 40 FT FROM THE EDGE OF TRAVEL LANE AND NO MORE THAN THREE (3) DAYS PRIOR TO THE BEGINNING OF CONSTRUCTION.

K) ENSURE ALL NECESSARY SIGNING IS IN PLACE PRIOR TO ALTERING ANY TRAFFIC PATTERN.

L) INSTALL BLACK ON ORANGE "DIP" SIGNS (W8-2) AND/OR "BUMP" SIGNS (W8-1) 500 FEET IN ADVANCE OF THE UNEVEN AREA, OR AS DIRECTED BY THE ENGINEER.

TRAFFIC BARRIER

M) INSTALL TEMPORARY BARRIER ACCORDING TO THE TRANSPORTATION MANAGEMENT PLANS A MAXIMUM OF TWO (2) WEEKS PRIOR TO BEGINNING WORK IN ANY LOCATION. ONCE TEMPORARY BARRIER IS INSTALLED AT ANY LOCATION PROCEED IN A CONTINUOUS MANNER TO COMPLETE THE PROPOSED WORK IN THAT LOCATION UNLESS OTHERWISE STATED IN THE TRANSPORTATION MANAGEMENT PLANS OR AS DIRECTED BY THE ENGINEER.

DO NOT PLACE BARRIER DIRECTLY ON ANY SURFACE OTHER THAN ASPHALT OR CONCRETE.

ONCE TEMPORARY BARRIER IS INSTALLED AT ANY LOCATION AND NO WORK IS PERFORMED BEHIND THE TEMPORARY BARRIER FOR A PERIOD LONGER THAN TWO (2) MONTHS, REMOVE / RESET TEMPORARY BARRIER AT NO COST TO THE DEPARTMENT UNLESS OTHERWISE STATED IN THE TRANSPORTATION MANAGEMENT PLANS, TEMPORARY BARRIER IS PROTECTING A HAZARD, OR AS DIRECTED BY THE ENGINEER.

INSTALL TEMPORARY BARRIER WITH THE TRAFFIC FLOW BEGINNING WITH THE UPSTREAM SIDE OF TRAFFIC. REMOVE TEMPORARY BARRIER AGAINST THE TRAFFIC FLOW BEGINNING WITH THE DOWNSTREAM SIDE OF TRAFFIC.

INSTALL AND SPACE DRUMS NO GREATER THAN TWICE THE POSTED SPEED LIMIT (MPH) TO CLOSE OR KEEP THE SECTION OF THE ROADWAY CLOSED UNTIL THE TEMPORARY BARRIER CAN BE PLACED OR AFTER THE TEMPORARY BARRIER IS REMOVED.

N) PROTECT THE APPROACH END OF MOVABLE/PORTABLE CONCRETE BARRIER AT ALL TIMES DURING THE INSTALLATION AND REMOVAL OF THE BARRIER BY EITHER A TRUCK MOUNTED ATTENUATOR (MAXIMUM 72 HOURS) OR A TEMPORARY CRASH CUSHION.

PROTECT THE APPROACH END OF MOVABLE/PORTABLE CONCRETE BARRIER FROM ONCOMING TRAFFIC AT ALL TIMES BY A TEMPORARY CRASH CUSHION UNLESS THE APPROACH END OF MOVABLE/PORTABLE CONCRETE BARRIER IS OFFSET FROM ONCOMING TRAFFIC AS FOLLOWS OR AS SHOWN IN THE PLANS: (SEE ALSO 1101.05)

POSTED SPEED LIMIT	MINIMUM OFFSET
40 OR LESS	15 FT
45 - 50	20 FT
55	25 FT
60 MPH or HIGHER	30 FT

TRAFFIC CONTROL DEVICES

O) WHEN LANE CLOSURES ARE NOT IN EFFECT SPACE CHANNELIZING DEVICES IN WORK AREAS NO GREATER IN FEET THAN TWICE THE POSTED SPEED LIMIT (MPH) EXCEPT, 10 FT ON-CENTER IN RADII, AND 3 FT OFF THE EDGE OF AN OPEN TRAVELWAY. REFER TO STANDARD SPECIFICATIONS FOR ROADS AND STRUCTURES SECTIONS 1130 (DRUMS), 1135 (CONES) AND 1180 (SKINNY DRUMS) FOR ADDITIONAL REQUIREMENTS.

P) PLACE TYPE III BARRICADES, WITH "ROAD CLOSED" SIGN R11-2 ATTACHED, OF SUFFICIENT LENGTH TO CLOSE ENTIRE ROADWAY.

PAVEMENT MARKINGS AND MARKERS

Q) INSTALL TEMPORARY PAVEMENT MARKINGS AND TEMPORARY PAVEMENT MARKERS ON INTERIM LAYERS OF PAVEMENT AS FOLLOWS:

ROAD NAME	MARKING	MARKER
-L-	PAINT	TEMPORARY RAISED

R) PLACE ONE APPLICATION OF PAINT FOR TEMPORARY TRAFFIC PATTERNS. PLACE A SECOND APPLICATION OF PAINT SIX (6) MONTHS AFTER THE INITIAL APPLICATION AND EVERY SIX MONTHS AS DIRECTED BY THE ENGINEER.

S) TIE PROPOSED PAVEMENT MARKING LINES TO EXISTING PAVEMENT MARKING LINES.

T) REMOVE/REPLACE ANY CONFLICTING/DAMAGED PAVEMENT MARKINGS AND MARKERS BY THE END OF EACH DAY'S OPERATION.

PLAN PREPARED IN THE OFFICE OF:
PROGRESSIVE DESIGN GROUP, INC.
ENGINEERS • CONSULTANTS

APPROVED: [signature] DATE: 05/15/14

SEAL
NORTH CAROLINA PROFESSIONAL SEAL 025465 ENGINEER TIM ARET

DIVISION OF HIGHWAYS * STATE OF NORTH CAROLINA * DEPARTMENT OF TRANSPORTATION * WORK ZONE TRAFFIC CONTROL

TRANSPORTATION OPERATIONS PLAN

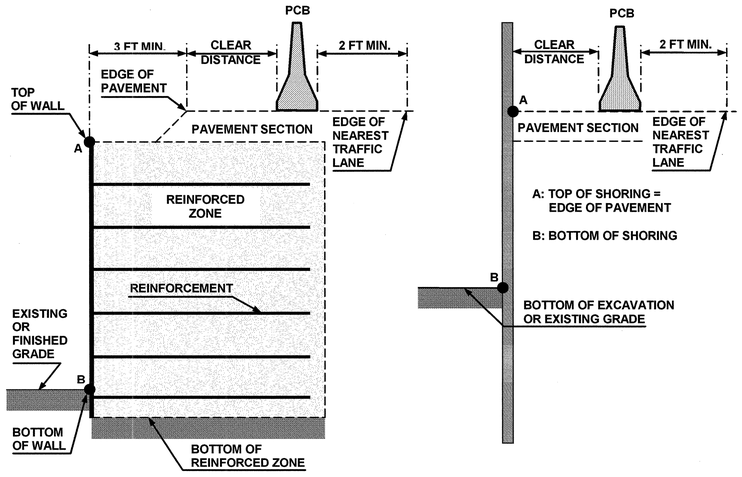

NOTE: WALL OR SHORING HEIGHT = A - B

FIGURE A

NOTES

1- REFER TO THE TRAFFIC CONTROL PLANS FOR TEMPORARY SHORING LOCATIONS AND NOTES.

2- REFER TO THE "TEMPORARY SHORING" PROJECT SPECIAL PROVISION FOR INFORMATION ABOUT TEMPORARY SHORING AND PORTABLE CONCRETE BARRIER (PCB).

3- PCB IS REQUIRED IF TEMPORARY SHORING IS LOCATED WITHIN THE CLEAR ZONE IN ACCORDANCE WITH THE AASHTO ROADSIDE DESIGN GUIDE. DO NOT PLACE BARRIER DIRECTLY ON ANY SURFACE OTHER THAN ASPHALT OR CONCRETE. (CONTACT NCDOT PAVEMENT MANAGEMENT UNIT FOR APPLICABLE PAVEMENT DESIGN).

4- BASED ON THE CLEAR DISTANCE, OFFSET, DESIGN SPEED AND PAVEMENT TYPE, CHOOSE AN UNANCHORED OR ANCHORED PCB FROM THE TABLE SHOWN IN FIGURE B. CLEAR DISTANCE IS DEFINED AS SHOWN IN FIGURE A AND OFFSET IS DEFINED AS SHOWN IN FIGURE B.

5- AT THE CONTRACTOR'S OPTION OR IF THE MINIMUM REQUIRED CLEAR DISTANCE IS NOT AVAILABLE, SET PCB NEXT TO AND UP AGAINST THE TRAFFIC SIDE OF THE TEMPORARY SHORING EXCEPT FOR BARRIER ABOVE TEMPORARY WALLS. PCB WITH THE MINIMUM REQUIRED CLEAR DISTANCE IS REQUIRED ABOVE TEMPORARY WALLS.

6- USE NCDOT PORTABLE CONCRETE BARRIER (PCB) IN ACCORDANCE WITH ROADWAY STANDARD DRAWING NO. 1170.01 AND SECTION 1170 OF THE STANDARD SPECIFICATIONS.

7- PCB REQUIREMENTS FOR TEMPORARY WALLS APPLY TO TEMPORARY MECHANICALLY STABILIZED EARTH (MSE) WALLS AND TEMPORARY SOIL NAIL WALLS.

8- SET PCB WITH A MINIMUM HORIZONTAL DISTANCE OF 2 FT BETWEEN THE FRONT FACE OF THE BARRIER AND THE EDGE OF THE NEAREST TRAFFIC LANE AS SHOWN IN FIGURE A UNLESS OTHERWISE SHOWN IN THE PLANS AND OR AS APPROVED BY THE ENGINEER.

9- FOR PCB ABOVE AND BEHIND TEMPORARY WALLS, PROVIDE A MINIMUM DISTANCE OF 3 FT BETWEEN THE EDGE OF PAVEMENT AND THE WALL FACE AS SHOWN IN FIGURE A. IF THESE MINIMUM REQUIRED DISTANCES ARE NOT AVAILABLE, CONTACT THE ENGINEER.

10- TABLE SHOWN IN FIGURE B IS BASED ON NCDOT RESEARCH PROJECT NO. 2005-010 WITH VEHICLE TYPE USED FOR NCHRP 350 CRASH TESTS. BARRIER DEFLECTIONS AND RESULTING MINIMUM REQUIRED CLEAR DISTANCES MIGHT VARY SIGNIFICANTLY FOR LARGER HEAVIER VEHICLES, RUNS OF BARRIER LESS THAN 200 FT IN LENGTH AND WET OR DRY PAVEMENT.

MINIMUM REQUIRED CLEAR DISTANCE, inches

Barrier Type	Pavement Type	Offset * ft	Design Speed, mph					
			<30	31-40	41-50	51-60	61-70	71-80
Unanchored PCB	Asphalt	<8	24	26	29	32	36	40
		8-14	26	28	31	35	38	42
		14-20	27	29	34	36	39	43
		20-26	28	31	35	38	40	44
		26-32	29	32	36	39	42	45
		32-38	30	34	38	41	43	46
		38-44	31	34	41	43	45	48
		44-50	31	35	41	43	46	49
		50-56	32	36	42	44	47	50
		>56	32	36	42	45	47	51
	Concrete	<8	17	18	21	22	25	26
		8-14	19	20	23	25	26	29
		14-20	22	22	24	26	28	31
		20-26	23	24	26	27	30	34
		26-32	24	25	27	28	32	35
		32-38	24	26	27	30	33	36
		38-44	25	26	28	30	34	37
		44-50	26	26	28	32	35	37
		50-56	26	26	28	32	35	38
		>56	26	27	29	32	36	38
Anchored PCB	Asphalt	All Offsets	24 for All Design Speeds					
Anchored PCB	Concrete (including bridge approach slabs)	All Offsets	12 for All Design Speeds					

*** See Figure Below**

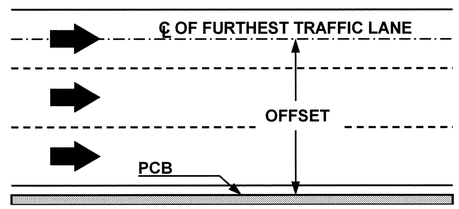

FIGURE B

PLAN PREPARED IN THE OFFICE OF:
PROGRESSIVE DESIGN GROUP, INC.
ENGINEERS • CONSULTANTS

APPROVED: [signature] DATE: 09/15/14

SEAL
NORTH CAROLINA PROFESSIONAL SEAL 025465 ENGINEER TIM ARE

DIVISION OF HIGHWAYS * STATE OF NORTH CAROLINA * DEPARTMENT OF TRANSPORTATION * WORK ZONE TRAFFIC CONTROL

TRANSPORTATION MANAGEMENT PLAN
PORTABLE CONCRETE BARRIER AT TEMPORARY SHORING LOCATIONS

PROJ. REFERENCE NO.	SHEET NO.
B-5117	TMP-2A

TEMPORARY SHORING NOTES

SHORING LOCATION NO. 1

FOR TEMPORARY SHORING AND POSITIVE PROTECTION FOR TEMPORARY SHORING, SEE PLANS AND TEMPORARY SHORING PROVISION.

BEFORE BEGINNING TEMPORARY SHORING DESIGN OR CONSTRUCTION, SURVEY EXISTING GROUND ELEVATIONS IN THE VICINITY OF SHORING LOCATIONS TO DETERMINE ACTUAL SHORING HEIGHTS.

DESIGN TEMPORARY SHORING FROM STATION 25+25± -L-, 21.7± FT LEFT, TO STATION 25+87.5± -L-, 24.0± FT LEFT, FOR THE FOLLOWING ASSUMED SOIL PARAMETERS AND GROUNDWATER ELEVATION:

- UNIT WEIGHT (γ) = 120 LB/CF
- FRICTION ANGLE (ϕ) = 27 DEGREES (ALLUVIAL SOILS ABOVE EL. 15 FT)
- FRICTION ANGLE (ϕ) = 30 DEGREES (SOILS BELOW EL. 15 FT)
- COHESION (c) = 0 LB/SF
- GROUNDWATER ELEVATION = 25 FT

DO NOT USE A TEMPORARY WALL FOR TEMPORARY SHORING FROM STATION 25+25± -L-, 21.7± FT LEFT, TO STATION 25+87.5± -L-, 24.0± FT LEFT.

SHORING LOCATION NO. 2

FOR TEMPORARY SHORING AND POSITIVE PROTECTION FOR TEMPORARY SHORING, SEE PLANS AND TEMPORARY SHORING PROVISION.

BEFORE BEGINNING TEMPORARY SHORING DESIGN OR CONSTRUCTION, SURVEY EXISTING GROUND ELEVATIONS IN THE VICINITY OF SHORING LOCATIONS TO DETERMINE ACTUAL SHORING HEIGHTS.

DESIGN TEMPORARY SHORING FROM STATION 26+60± -L-, 23.9± FT LEFT, TO STATION 27+10.0± -L-, 23.0± FT LEFT, FOR THE FOLLOWING ASSUMED SOIL PARAMETERS AND GROUNDWATER ELEVATION:

- UNIT WEIGHT (γ) = 120 LB/CF
- FRICTION ANGLE (ϕ) = 27 DEGREES (ALLUVIAL SOILS ABOVE EL. 15 FT)
- FRICTION ANGLE (ϕ) = 30 DEGREES (SOILS BELOW EL. 15 FT)
- COHESION (c) = 0 LB/SF
- GROUNDWATER ELEVATION = 25 FT

DO NOT USE A TEMPORARY WALL FOR TEMPORARY SHORING FROM STATION 26+60± -L-, 23.9± FT LEFT, TO STATION 27+10.0± -L-, 23.0± FT LEFT.

SHORING LOCATION NO. 3

FOR TEMPORARY SHORING AND POSITIVE PROTECTION FOR TEMPORARY SHORING, SEE PLANS AND TEMPORARY SHORING PROVISION.

BEFORE BEGINNING TEMPORARY SHORING DESIGN OR CONSTRUCTION, SURVEY EXISTING GROUND ELEVATIONS IN THE VICINITY OF SHORING LOCATIONS TO DETERMINE ACTUAL SHORING HEIGHTS.

DESIGN TEMPORARY SHORING FROM STATION 23+50± -L-, 15.0± FT LEFT, TO STATION 25+62.0± -L-, 21.0± FT LEFT, FOR THE FOLLOWING ASSUMED SOIL PARAMETERS AND GROUNDWATER ELEVATION:

- UNIT WEIGHT (γ) = 120 LB/CF
- FRICTION ANGLE (ϕ) = 27 DEGREES (ALLUVIAL SOILS ABOVE EL. 15 FT)
- FRICTION ANGLE (ϕ) = 30 DEGREES (SOILS BELOW EL. 15 FT)
- COHESION (c) = 0 LB/SF
- GROUNDWATER ELEVATION = 25 FT

DO NOT USE CANTILEVER, BRACED OR ANCHORED SHORING FOR TEMPORARY SHORING FROM STATION 23+50± -L-, 15.0± FT LEFT, TO STATION 25+62.0± -L-, 21.0± FT LEFT.

WHEN BACKFILL FOR BRIDGE APPROACH FILLS OVERLAPS WITH THE REINFORCED ZONE OF TEMPORARY WALLS, USE SHORING BACKFILL OR BACKFILL MATERIAL REQUIRED FOR BRIDGE APPROACH FILLS, WHICHEVER IS BETTER, IN THE REINFORCED ZONE OF TEMPORARY WALLS.

SHORING LOCATION NO. 4

FOR TEMPORARY SHORING AND POSITIVE PROTECTION FOR TEMPORARY SHORING, SEE PLANS AND TEMPORARY SHORING PROVISION.

BEFORE BEGINNING TEMPORARY SHORING DESIGN OR CONSTRUCTION, SURVEY EXISTING GROUND ELEVATIONS IN THE VICINITY OF SHORING LOCATIONS TO DETERMINE ACTUAL SHORING HEIGHTS.

DESIGN TEMPORARY SHORING FROM STATION 26+82± -L-, 21.0± FT LEFT, TO STATION 29+50.0± -L-, 13.8± FT LEFT, FOR THE FOLLOWING ASSUMED SOIL PARAMETERS AND GROUNDWATER ELEVATION:

- UNIT WEIGHT (γ) = 120 LB/CF
- FRICTION ANGLE (ϕ) = 27 DEGREES (ALLUVIAL SOILS ABOVE EL. 15 FT)
- FRICTION ANGLE (ϕ) = 30 DEGREES (SOILS BELOW EL. 15 FT)
- COHESION (c) = 0 LB/SF
- GROUNDWATER ELEVATION = 25 FT

DO NOT USE CANTILEVER, BRACED OR ANCHORED SHORING FOR TEMPORARY SHORING FROM STATION 26+82± -L-, 21.0± FT LEFT, TO STATION 29+50.0± -L-, 13.8± FT LEFT.

WHEN BACKFILL FOR BRIDGE APPROACH FILLS OVERLAPS WITH THE REINFORCED ZONE OF TEMPORARY WALLS, USE SHORING BACKFILL OR BACKFILL MATERIAL REQUIRED FOR BRIDGE APPROACH FILLS, WHICHEVER IS BETTER, IN THE REINFORCED ZONE OF TEMPORARY WALLS.

APPROVED: _____ DATE: _____

SEAL

NORTH CAROLINA PROFESSIONAL SEAL 038176 ENGINEER SHIHAI ZHANG

5-22-2014

DIVISION OF HIGHWAYS * STATE OF NORTH CAROLINA * DEPARTMENT OF TRANSPORTATION * WORK ZONE TRAFFIC CONTROL

TEMPORARY SHORING NOTES

5/22/2014
P:\TIPProjects-BY85117\Traffic\TrafficControl\TCP\B-5117_TC_TMP_TMP2A SHORING NOTES.dgn
User:donaldson

PROJ. REFERENCE NO.	SHEET NO.
B-5117	TMP-3

PHASING

PHASE I

STEP 1: INSTALL WORK ZONE ADVANCE WARNING SIGNS ON -L- ACCORDING TO ROADWAY STANDARD DRAWING NO. 1101.01.

STEP 2: USING ROADWAY STANDARD DRAWING NO. 1101.02, SHEET 1 OF 15, COMPLETE THE FOLLOWING:
- WEDGING OPERATIONS ALONG -L- IN THE LOCATIONS SHOWN ON SHEETS TMP-4, TMP-5, TMP-10 AND TMP-11. INSTALL TEMPORARY PAINT PAVEMENT MARKINGS AND TEMPORARY RAISED MARKERS BACK TO THE ORIGINAL PATTERN ON THE WEDGING SURFACE BY THE END OF EACH CONSTRUCTION PERIOD.
- CONSTRUCT TEMPORARY PAVEMENT ALONG THE RIGHT SIDE OF -L- FOR SUPPORTING THE PORTABLE CONCRETE BARRIER IN THE LOCATIONS AND AS SHOWN ON SHEETS TMP-4, TMP-5, TMP-10 AND TMP-11.
- INSTALL PORTABLE CONCRETE BARRIER AND TEMPORARY CRASH CUSHIONS IN THE LOCATIONS SHOWN ON SHEETS TMP-4 AND TMP-5 ACCORDING TO THE PORTABLE CONCRETE BARRIER INSTALLATION TYPICAL SHOWN ON SHEET TMP-4.

CONSTRUCT THE TEMPORARY DRIVEWAY RIGHT OF -L- AS SHOWN ON SHEET TMP-5 AND DIRECT THE RESIDENTIAL TRAFFIC TO THE NEW DRIVEWAY.

STEP 3: INSTALL TEMPORARY SHORING ADJACENT TO RIGHT SIDE OF EXISTING -L- IN THE LOCATIONS SHOWN ON SHEETS TMP-5 AND TMP-10 AND BEGIN CONSTRUCTION ON THE PROPOSED -L- BRIDGE OVER LAKE CREEK.

PHASE II

STEP 1: REMOVE UNSUITABLE MATERIAL ALONG -L- IN THE LOCATIONS SHOWN IN THE ROADWAY DESIGN PLANS.

STEP 2: CONSTRUCT PROPOSED -L- UP TO BUT NOT INCLUDING THE FINAL LAYER OF SURFACE COURSE IN THE LOCATIONS SHOWN ON SHEETS TMP-6, TMP-7, TMP-12, TMP-13, AND TMP-14.

STEP 3: WITHOUT INTERFERING WITH EXISTING TRAFFIC PATTERNS COMPLETE THE FOLLOWING:
- INSTALL TEMPORARY PAINT PAVEMENT MARKINGS AND RAISED MARKERS ALONG PROPOSED -L- IN THE LOCATIONS SHOWN ON SHEETS TMP-8 AND TMP-9.
- INSTALL PORTABLE CONCRETE BARRIER ALONG THE LEFT SIDE OF PROPOSED -L- IN THE LOCATIONS SHOWN ON SHEETS TMP-8 AND TMP-9.

COMPLETE CONSTRUCTION ON THE PROPOSED -L- BRIDGE OVER LAKE CREEK.

PHASE III

STEP 1: COMPLETE THE FOLLOWING IN ONE CONSTRUCTION PERIOD USING ROADWAY STANDARD DRAWING NO. 1101.02, SHEET 1 OF 15:
- REMOVE THE PORTABLE CONCRETE BARRIER IN BOTH TIE IN LOCATIONS OF -L-.
- USING ALTERNATING LANE CLOSURES, TIE IN (WEDGING OPERATIONS) PROPOSED -L- TO EXISTING -L- FROM STA. 16+50+/- TO STA. 23+00+/- AND FROM STA. 29+75+/ TO STA. 35+50+/-.
- INSTALL REMAINING TEMPORARY PAINT PAVEMENT MARKINGS AND TEMPORARY RAISED MARKERS IN BOTH TIE IN LOCATIONS OF -L- AND SHIFT -L- TRAFFIC ONTO THE PROPOSED -L- ALIGNMENT AS SHOWN ON SHEETS TMP-8 AND TMP-9.
- INSTALL PORTABLE CONCRETE BARRIER AND TEMPORARY CRASH CUSHIONS IN BOTH TIE IN LOCATIONS OF -L- TO THE PATTERN SHOWN ON SHEETS TMP-8 AND TMP-9.

REMOVE TEMPORARY DRIVEWAY AND RESTORE SHOULDER ALONG THE RIGHT SIDE OF PROPOSED -L-

STEP 2: REMOVE ORIGINAL -L- BRIDGE AND APPROACHES AS SHOWN ON SHEETS TMP-8 AND TMP-9 AND CONSTRUCT REMAINING EARTHWORK AND SHOULDER ALONG THE LEFT SIDE OF PROPOSED -L- AS SHOWN ON SHEETS TMP-8 AND TMP-9. INSTALL GUARDRAIL LEFT OF -L-.

STEP 3: USING ROADWAY STANDARD DRAWING NO. 1101.02, SHEET 1 OF 15 PLACE THE FINAL LAYER OF SURFACE COURSE ON -L- AND INSTALL THE FINAL PAVEMENT MARKINGS AS SHOWN ON THE FINAL PAVEMENT MARKING PLANS.

STEP 4: REMOVE ALL TRAFFIC CONTROL DEVICES.

PLAN PREPARED IN THE OFFICE OF:
PROGRESSIVE DESIGN GROUP, INC.
ENGINEERS • CONSULTANTS

APPROVED: [signature] DATE: 05/15/14

SEAL

NORTH CAROLINA PROFESSIONAL SEAL 025465 ENGINEER TIM AREY

DIVISION OF HIGHWAYS * STATE OF NORTH CAROLINA * DEPARTMENT OF TRANSPORTATION * WORK ZONE TRAFFIC CONTROL

TRANSPORTATION OPERATIONS PLAN

PROJ. REFERENCE NO.	SHEET NO.
B-5117	TMP-4

PORTABLE CONCRETE BARRIER INSTALLATION TYPICAL

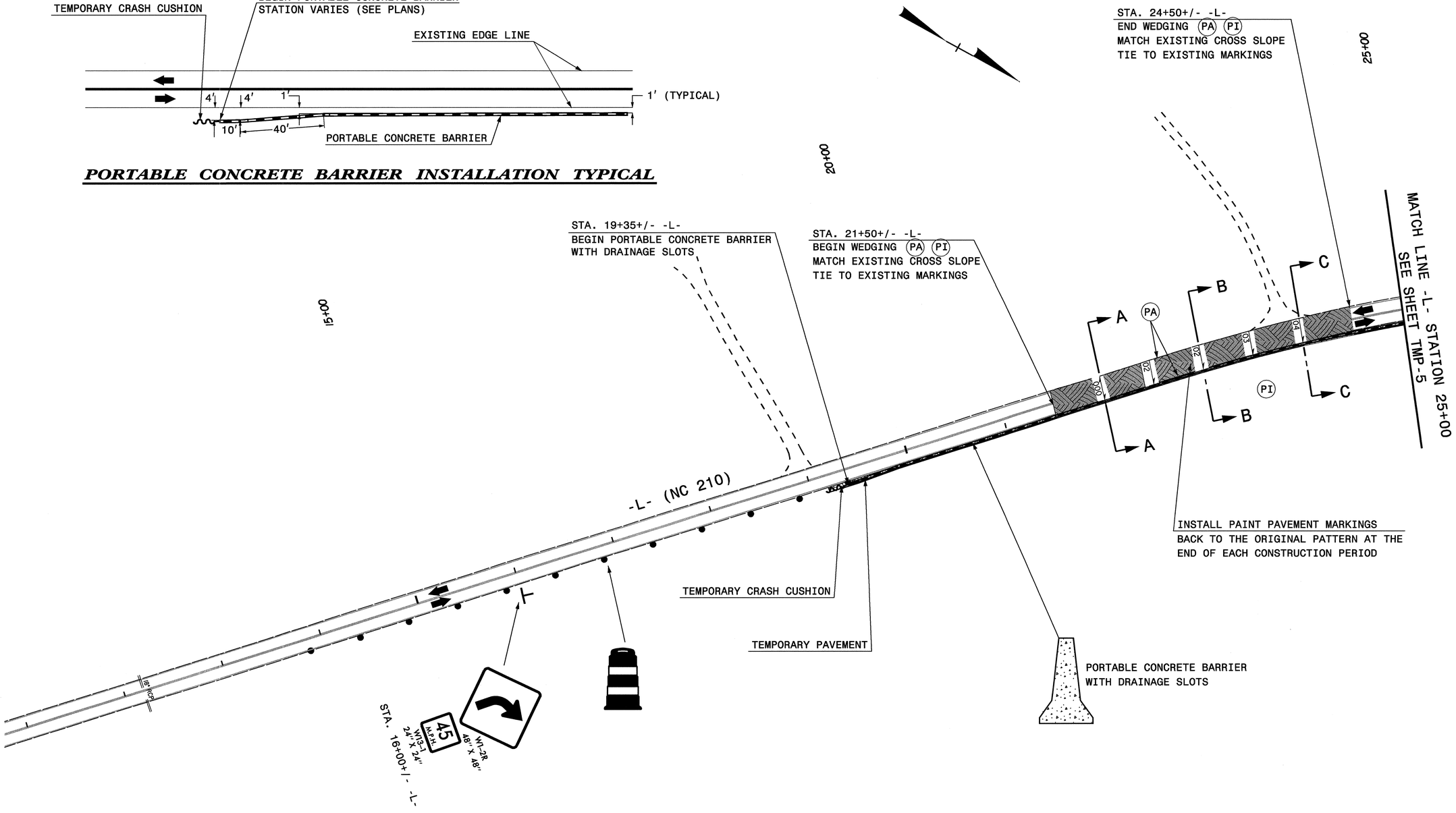

NOTE:
SEE SHEET TMP-10 & TMP-11 FOR CROSS SECTIONS.

PLAN PREPARED IN THE OFFICE OF:
PROGRESSIVE DESIGN GROUP, INC.
ENGINEERS • CONSULTANTS

APPROVED: _____ DATE: 05/15/14

SEAL
NORTH CAROLINA PROFESSIONAL SEAL 025465 ENGINEER TIM ARET

DIVISION OF HIGHWAYS
STATE OF NORTH CAROLINA
DEPARTMENT OF TRANSPORTATION
WORK ZONE TRAFFIC CONTROL

TRANSPORTATION MANAGEMENT PLAN PHASE I DETAILS

PROJ. REFERENCE NO.	SHEET NO.
B-5117	TMP-5

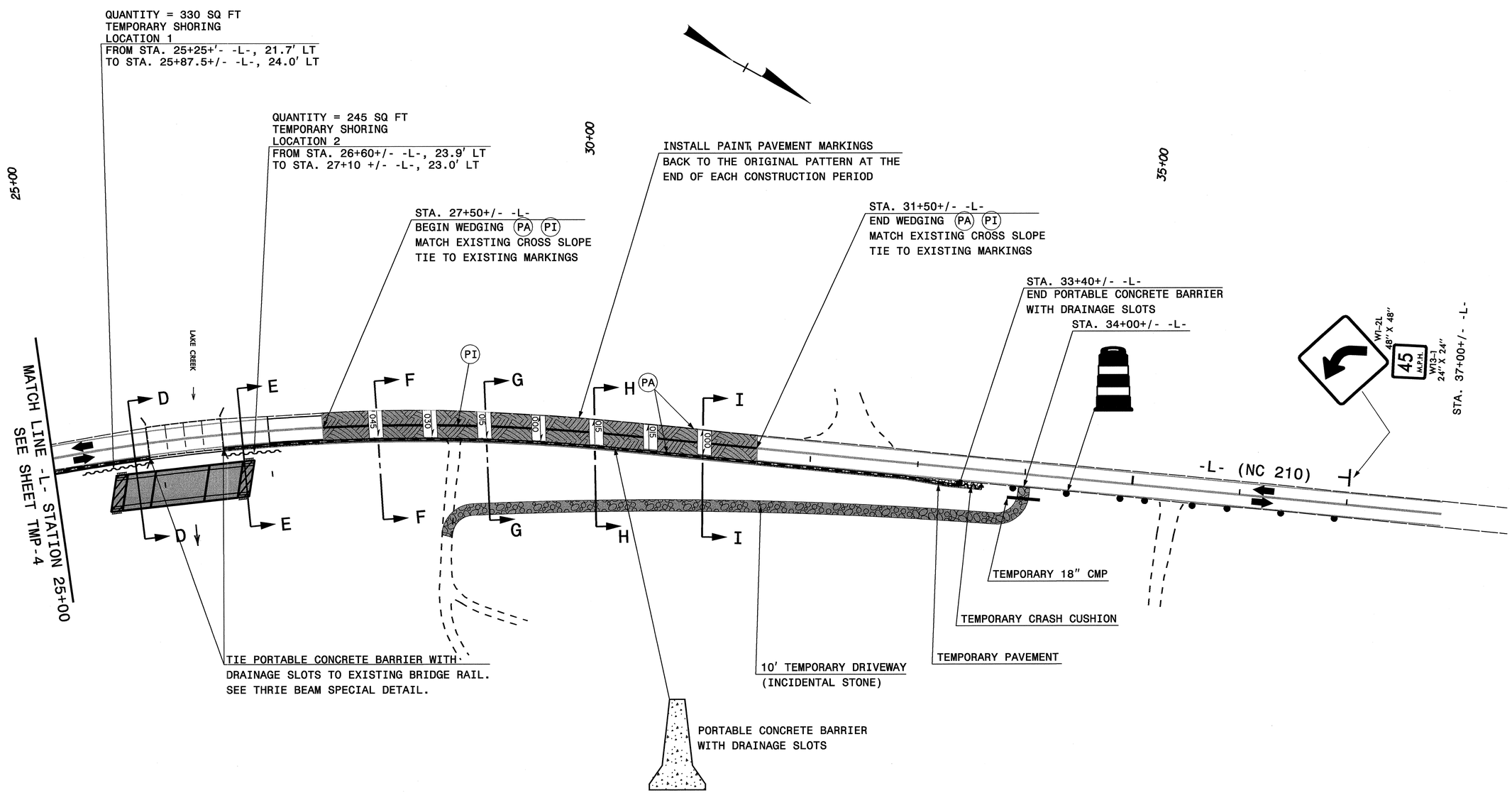

NOTE:
SEE SHEET TMP-10 & TMP-11 FOR CROSS SECTIONS.

PLAN PREPARED IN THE OFFICE OF:
PROGRESSIVE DESIGN GROUP, INC.
ENGINEERS • CONSULTANTS

APPROVED: Tim Arey DATE: 06/15/14

SEAL
NORTH CAROLINA PROFESSIONAL SEAL 025465 ENGINEER TIM AREY

DIVISION OF HIGHWAYS
STATE OF NORTH CAROLINA
DEPARTMENT OF TRANSPORTATION
WORK ZONE TRAFFIC CONTROL

TRANSPORTATION MANAGEMENT PLAN PHASE I DETAILS

PROJ. REFERENCE NO.	SHEET NO.
B-5117	TMP-6

PORTABLE CONCRETE BARRIER INSTALLATION TYPICAL

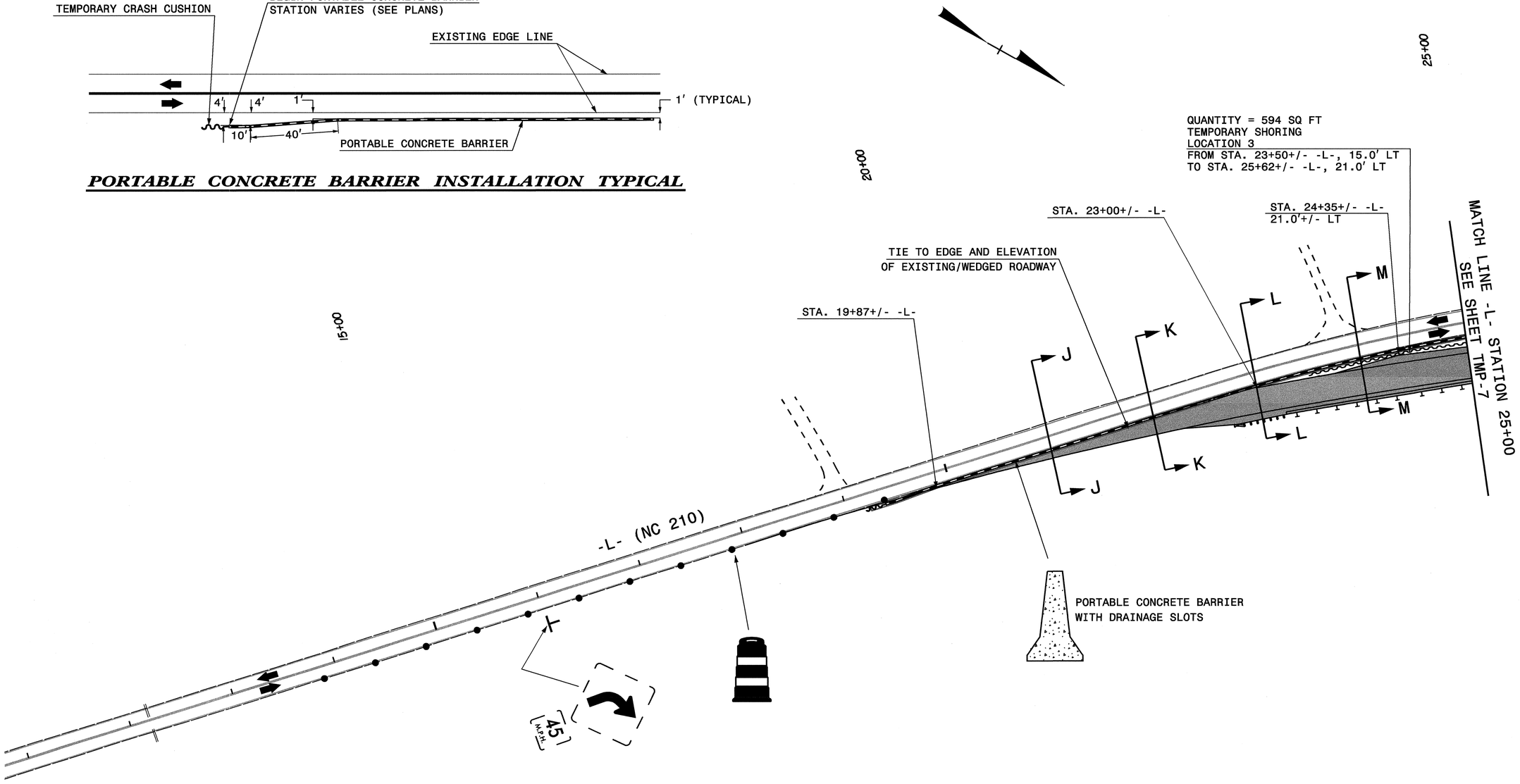

NOTE:
SEE SHEET TMP-12 THRU TMP-14 FOR CROSS SECTIONS.

PLAN PREPARED IN THE OFFICE OF:
PROGRESSIVE DESIGN GROUP, INC.
ENGINEERS • CONSULTANTS

APPROVED: _____ DATE: 05/13/14

SEAL
NORTH CAROLINA PROFESSIONAL SEAL 025465 ENGINEER TIM AREY

DIVISION OF HIGHWAYS
STATE OF NORTH CAROLINA
DEPARTMENT OF TRANSPORTATION
WORK ZONE TRAFFIC CONTROL

TRANSPORTATION MANAGEMENT PLAN PHASE II DETAILS

PROJ. REFERENCE NO.	SHEET NO.
B-5117	TMP-7

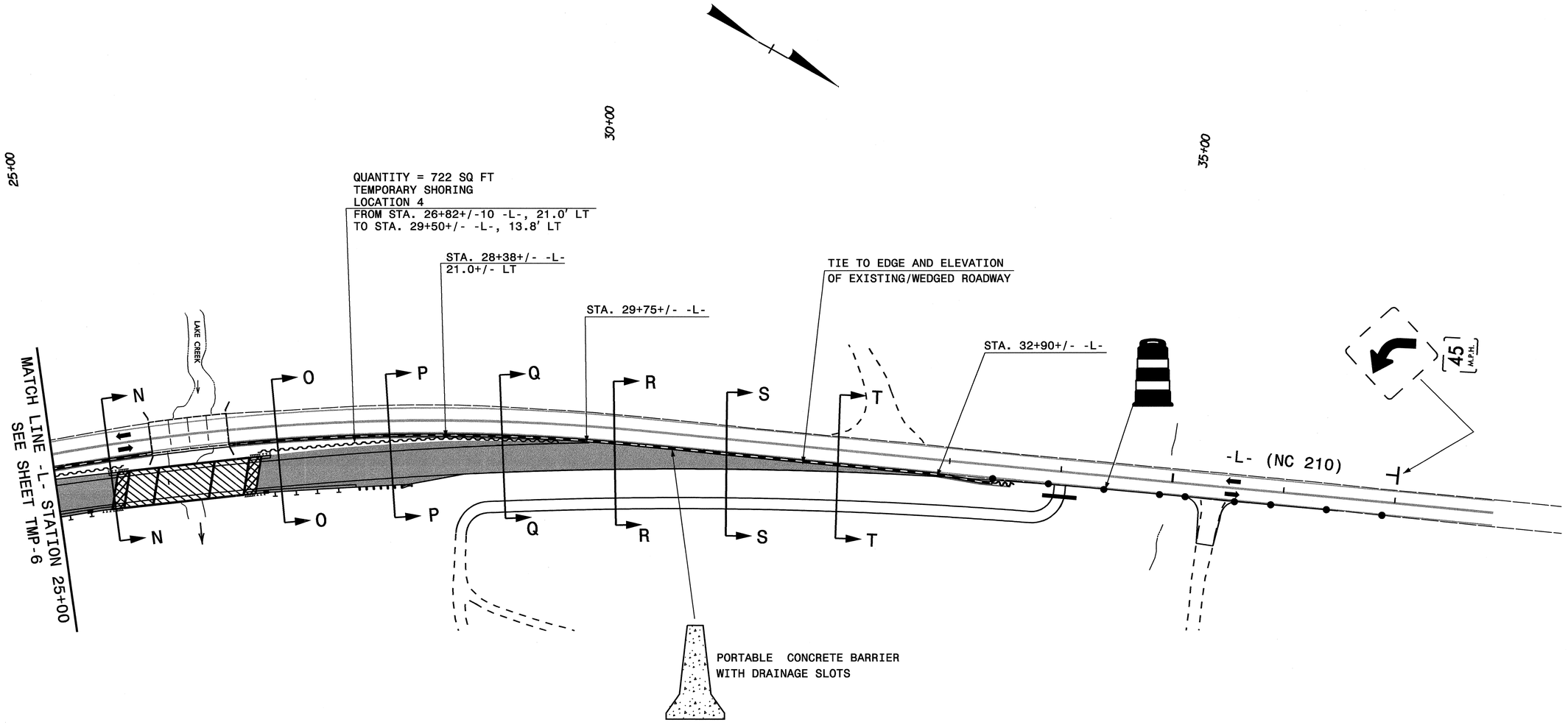

NOTE:
SEE SHEET TMP-12 THRU TMP-14 FOR CROSS SECTIONS.

PLAN PREPARED IN THE OFFICE OF:
PROGRESSIVE DESIGN GROUP, INC.
ENGINEERS • CONSULTANTS

APPROVED: _____ DATE: 05/15/14

SEAL
NORTH CAROLINA PROFESSIONAL SEAL 025465 ENGINEER JIM AREY

DIVISION OF HIGHWAYS
STATE OF NORTH CAROLINA
DEPARTMENT OF TRANSPORTATION
WORK ZONE TRAFFIC CONTROL

TRANSPORTATION MANAGEMENT PLAN PHASE II DETAILS

PROJ. REFERENCE NO.	SHEET NO.
B-5117	TMP-8

PORTABLE CONCRETE BARRIER INSTALLATION TYPICAL

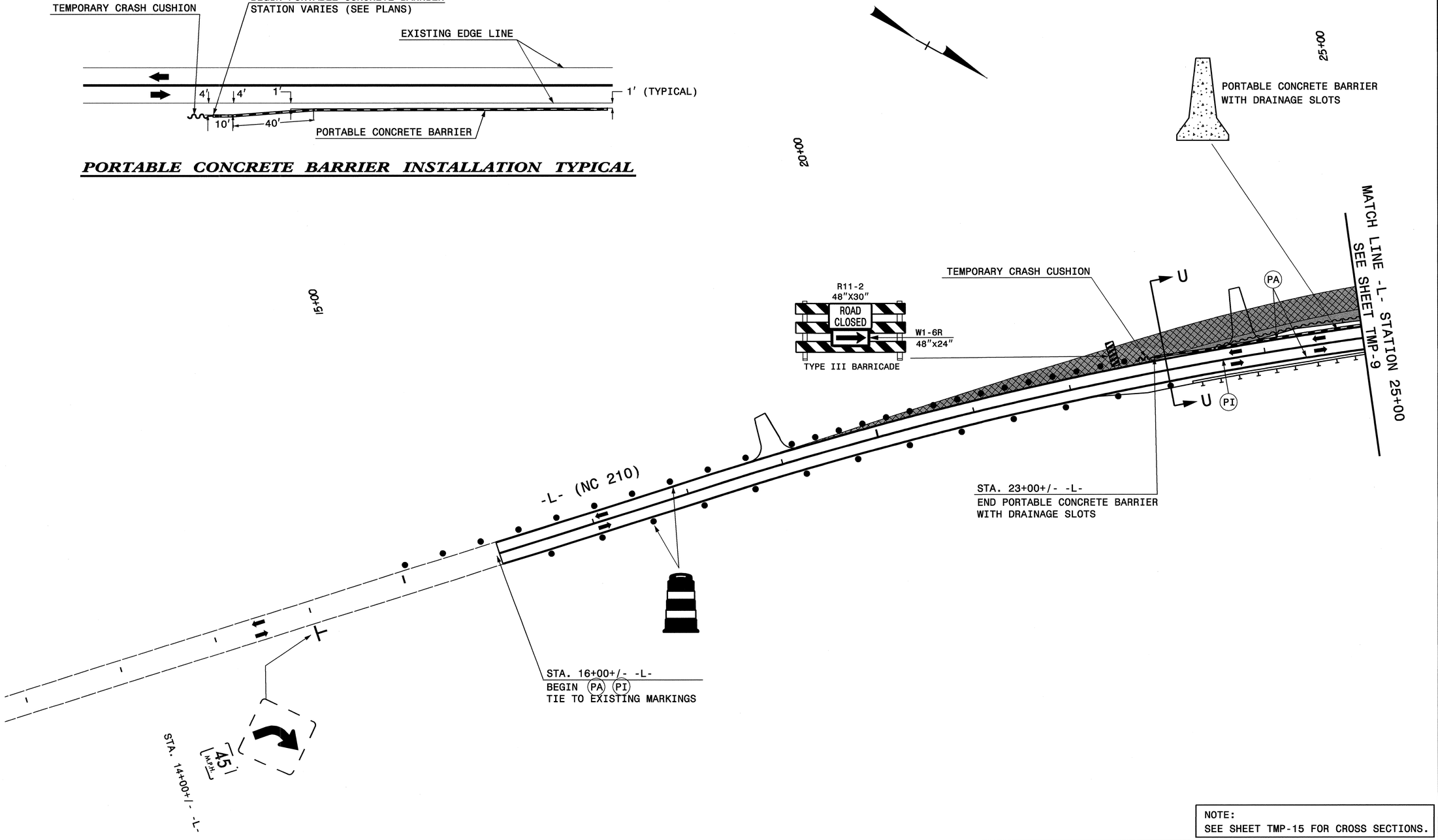

NOTE:
SEE SHEET TMP-15 FOR CROSS SECTIONS.

PLAN PREPARED IN THE OFFICE OF:
PROGRESSIVE DESIGN GROUP, INC.
ENGINEERS • CONSULTANTS

APPROVED: [signature] DATE: 06/19/14

SEAL
NORTH CAROLINA PROFESSIONAL SEAL 025465 ENGINEER TIM AREY

DIVISION OF HIGHWAYS
STATE OF NORTH CAROLINA
DEPARTMENT OF TRANSPORTATION
WORK ZONE TRAFFIC CONTROL

TRANSPORTATION MANAGEMENT PLAN PHASE III DETAILS

PROJ. REFERENCE NO.	SHEET NO.
B-5117	TMP-9

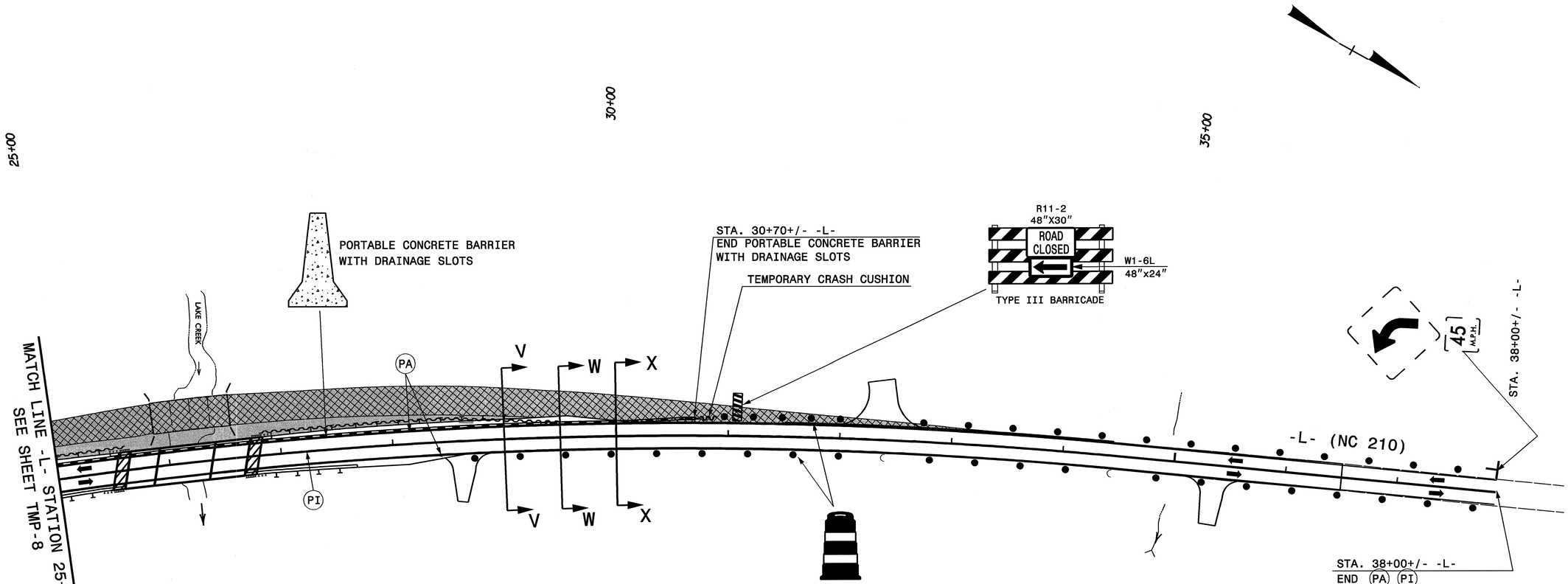

NOTE:
SEE SHEET TMP-15 FOR CROSS SECTIONS.

PLAN PREPARED IN THE OFFICE OF:
PROGRESSIVE DESIGN GROUP, INC.
ENGINEERS • CONSULTANTS

APPROVED: _____ DATE: 05/15/14

SEAL

NORTH CAROLINA PROFESSIONAL SEAL 025465 ENGINEER TIM AREY

DIVISION OF HIGHWAYS
STATE OF NORTH CAROLINA
DEPARTMENT OF TRANSPORTATION
WORK ZONE TRAFFIC CONTROL

TRANSPORTATION MANAGEMENT PLAN
PHASE III DETAILS

PROJ. REFERENCE NO.	SHEET NO.
B-5117	TMP-10

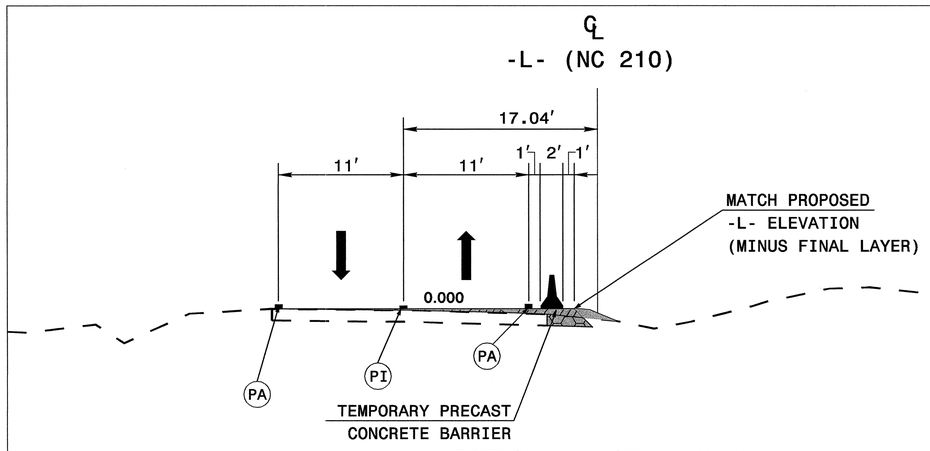

SECTION A-A STA. 22+00

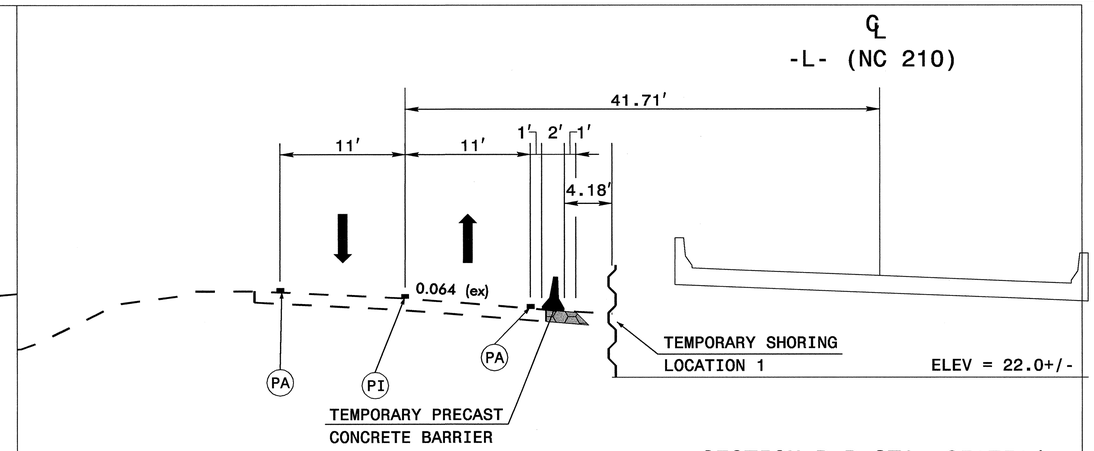

SECTION D-D STA. 25+75+/-

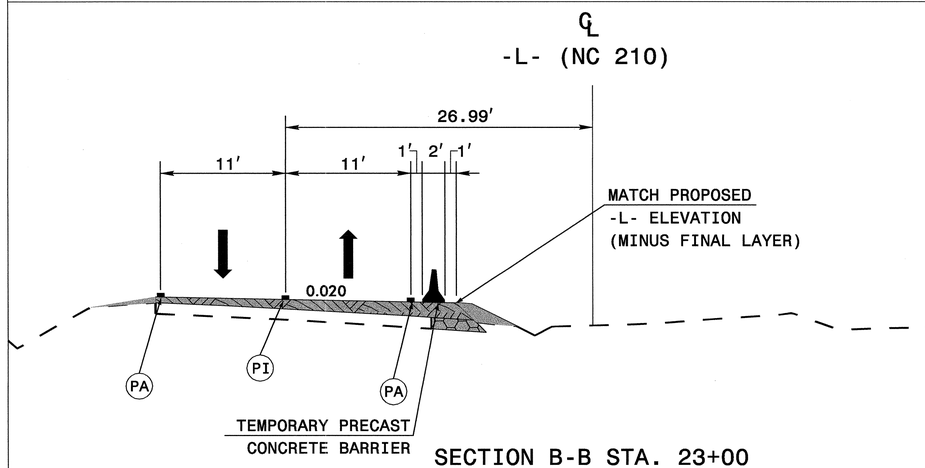

SECTION B-B STA. 23+00

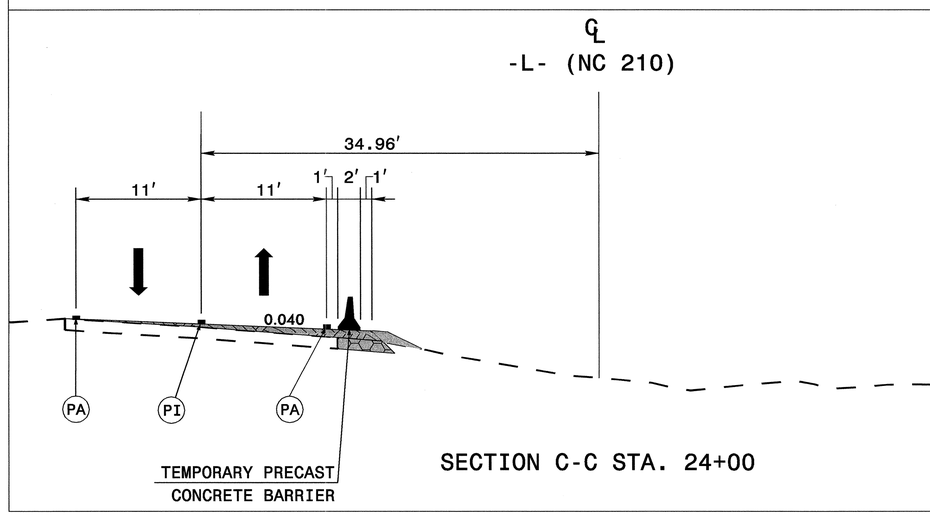

SECTION C-C STA. 24+00

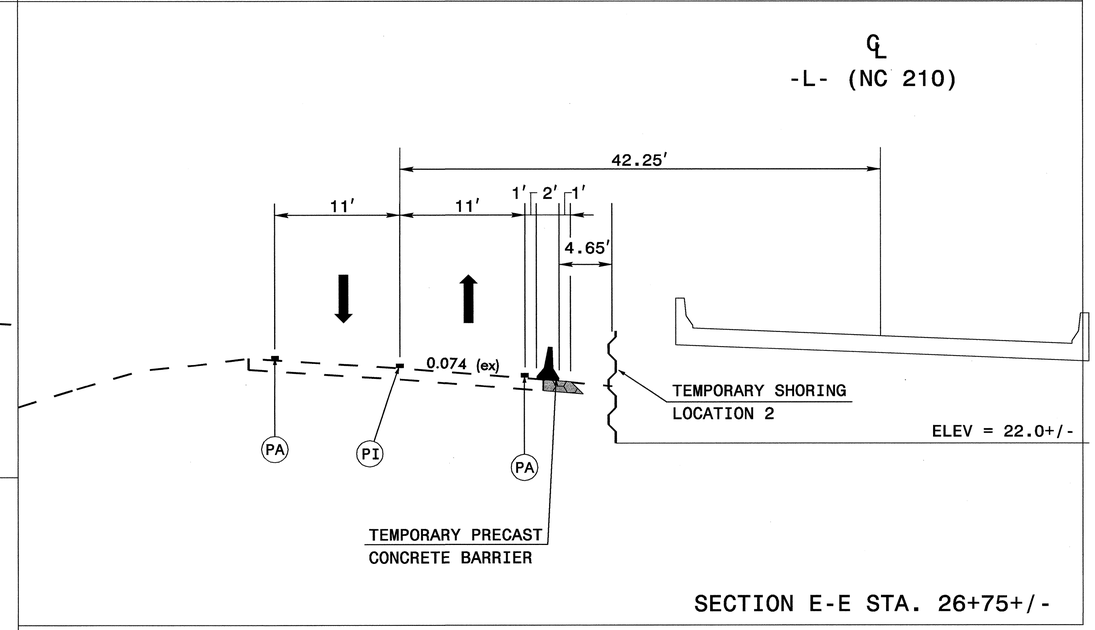

SECTION E-E STA. 26+75+/-

PLAN PREPARED IN THE OFFICE OF:
PROGRESSIVE DESIGN GROUP, INC.
ENGINEERS • CONSULTANTS

APPROVED: [signature] DATE: 05/15/14

SEAL
NORTH CAROLINA PROFESSIONAL SEAL 025465 ENGINEER TIM AREY

DIVISION OF HIGHWAYS
STATE OF NORTH CAROLINA
DEPARTMENT OF TRANSPORTATION
WORK ZONE TRAFFIC CONTROL

TRANSPORTATION MANAGEMENT PLAN
PHASE I CROSS SECTIONS

PROJ. REFERENCE NO.	SHEET NO.
B-5117	TMP-11

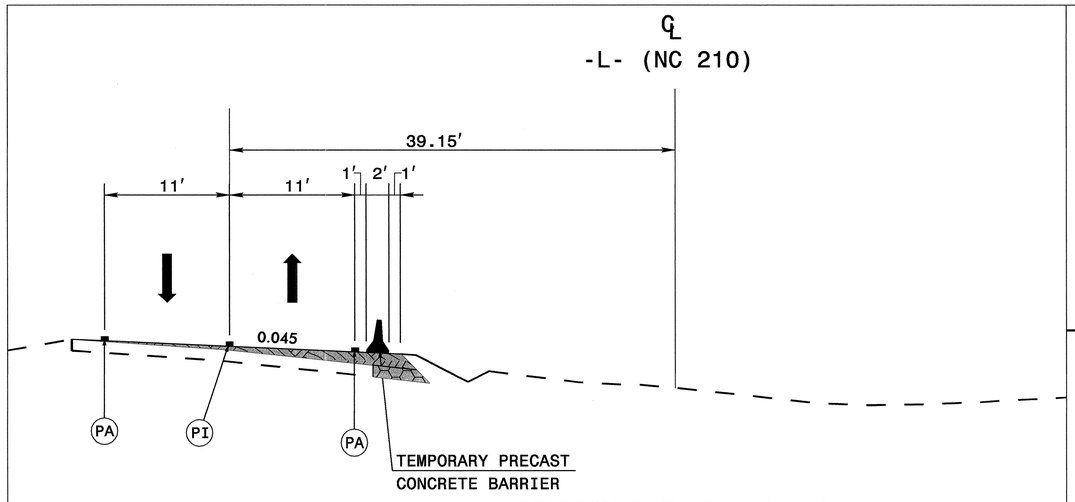

SECTION F-F STA. 28+00

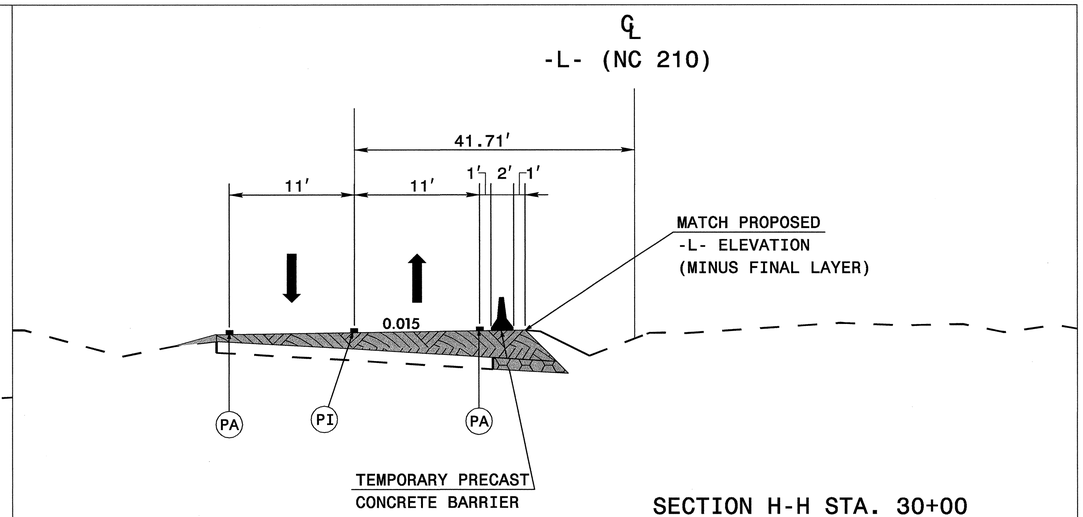

SECTION H-H STA. 30+00

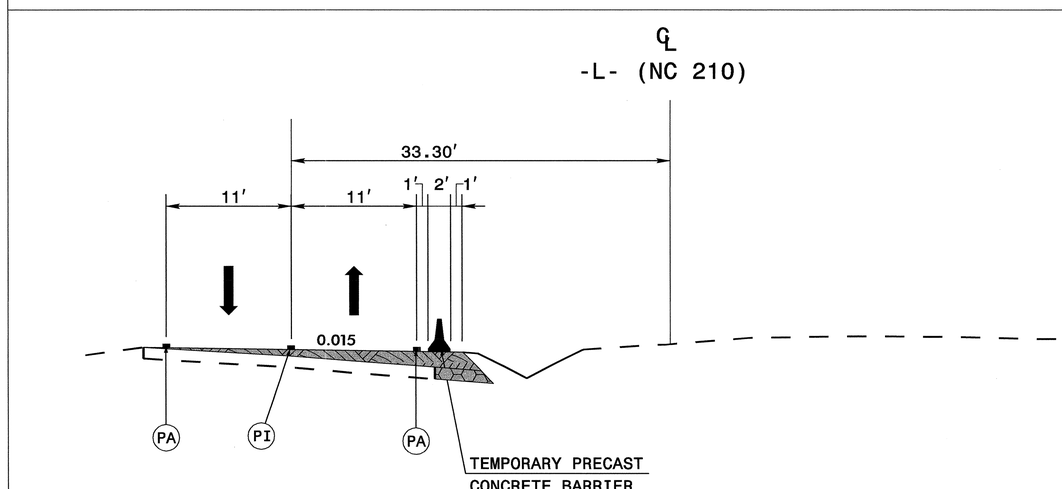

SECTION G-G STA. 29+00

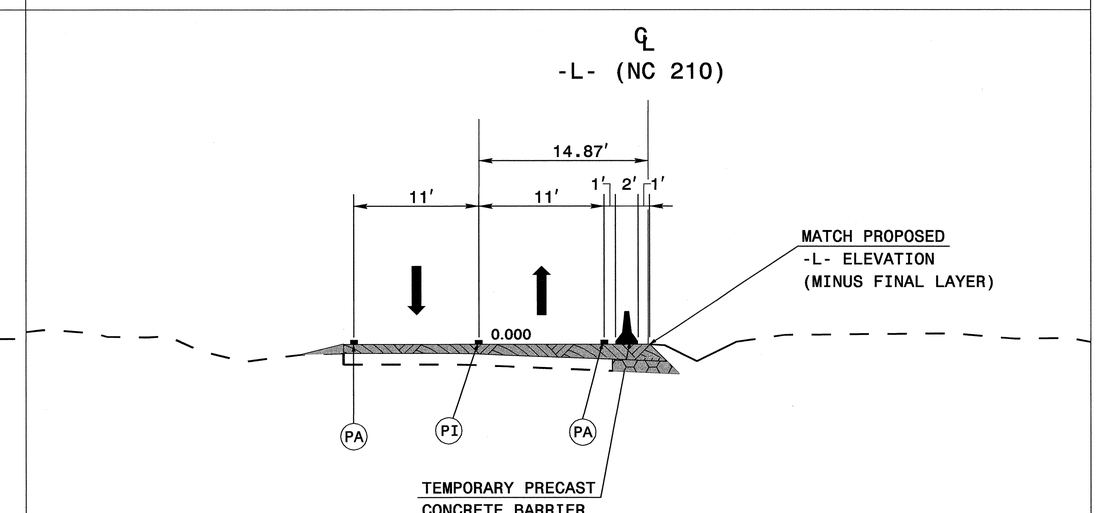

SECTION I-I STA. 31+00

PLAN PREPARED IN THE OFFICE OF:
PROGRESSIVE DESIGN GROUP, INC.
ENGINEERS • CONSULTANTS

APPROVED: [signature] DATE: 05/13/14

SEAL

NORTH CAROLINA PROFESSIONAL SEAL 025465 ENGINEER TIM AREY

DIVISION OF HIGHWAYS
STATE OF NORTH CAROLINA
DEPARTMENT OF TRANSPORTATION
WORK ZONE TRAFFIC CONTROL

TRANSPORTATION
MANAGEMENT PLAN
PHASE I CROSS SECTIONS

PROJ. REFERENCE NO.	SHEET NO.
B-5117	TMP-12

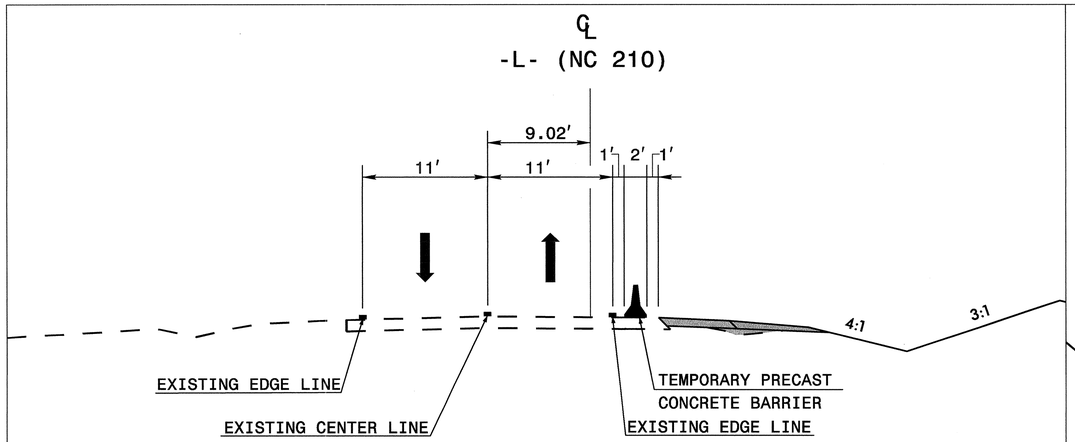

SECTION J-J STA. 21+00

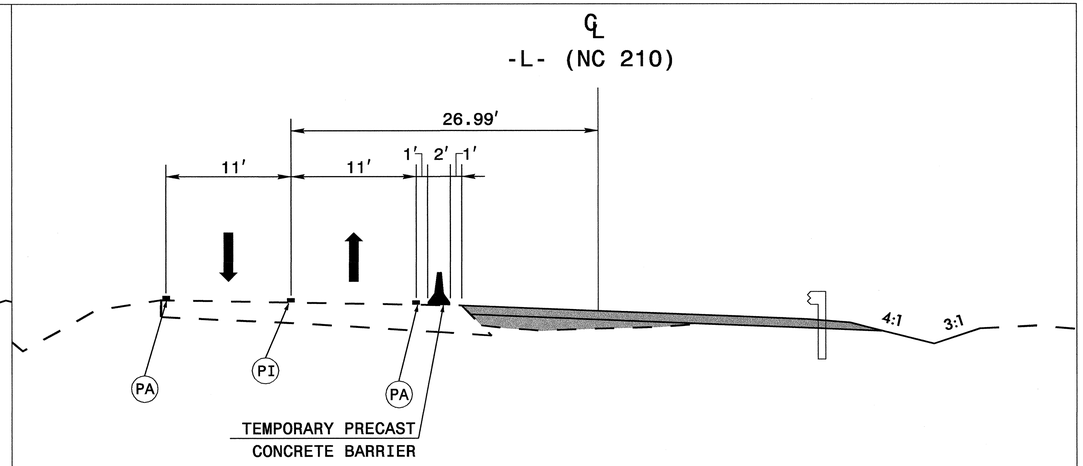

SECTION L-L STA. 23+00

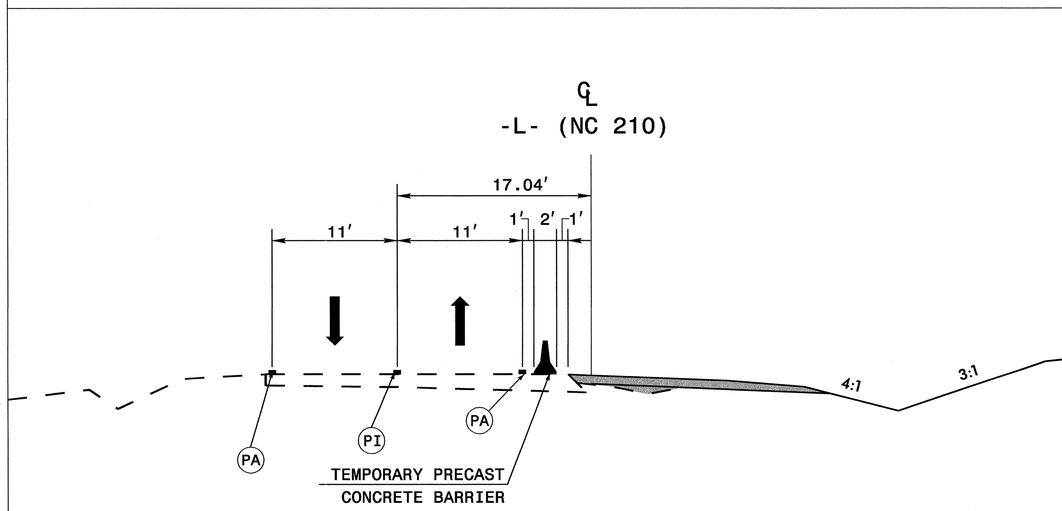

SECTION K-K STA. 22+00

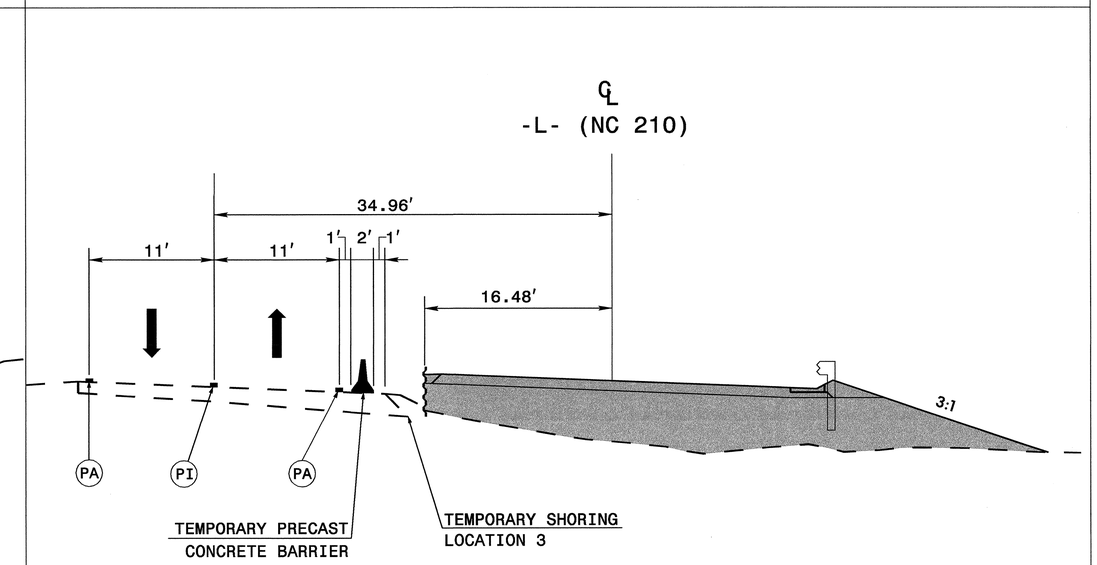

SECTION M-M STA. 24+00

PLAN PREPARED IN THE OFFICE OF:
PROGRESSIVE DESIGN GROUP, INC.
ENGINEERS • CONSULTANTS

APPROVED: [signature] DATE: 05/13/14

SEAL

NORTH CAROLINA PROFESSIONAL SEAL 025465 ENGINEER TIM AREY

DIVISION OF HIGHWAYS
STATE OF NORTH CAROLINA
DEPARTMENT OF TRANSPORTATION
WORK ZONE TRAFFIC CONTROL

TRANSPORTATION
MANAGEMENT PLAN
PHASE II CROSS SECTIONS

PROJ. REFERENCE NO.	SHEET NO.
B-5117	TMP-13

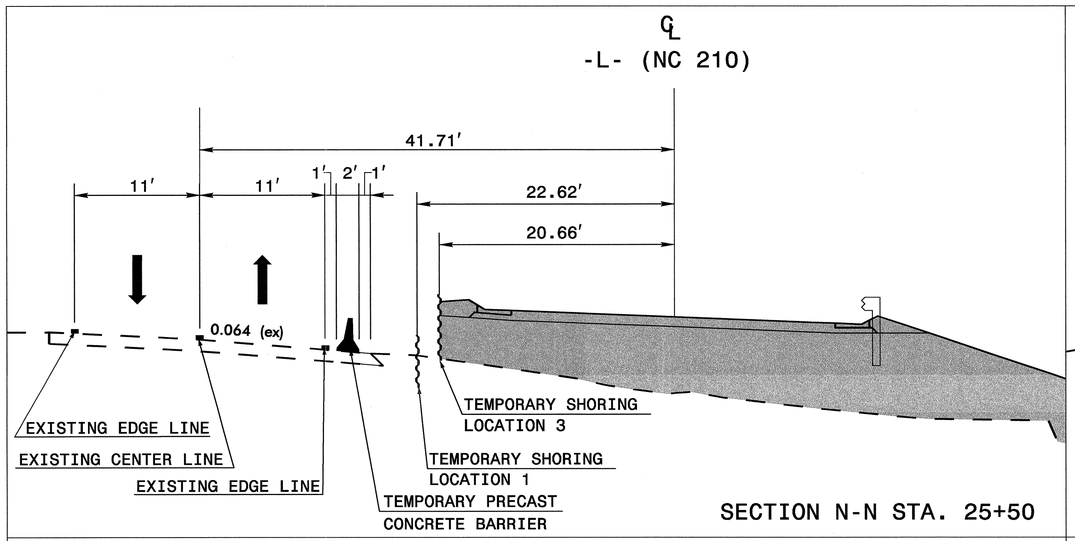

SECTION N-N STA. 25+50

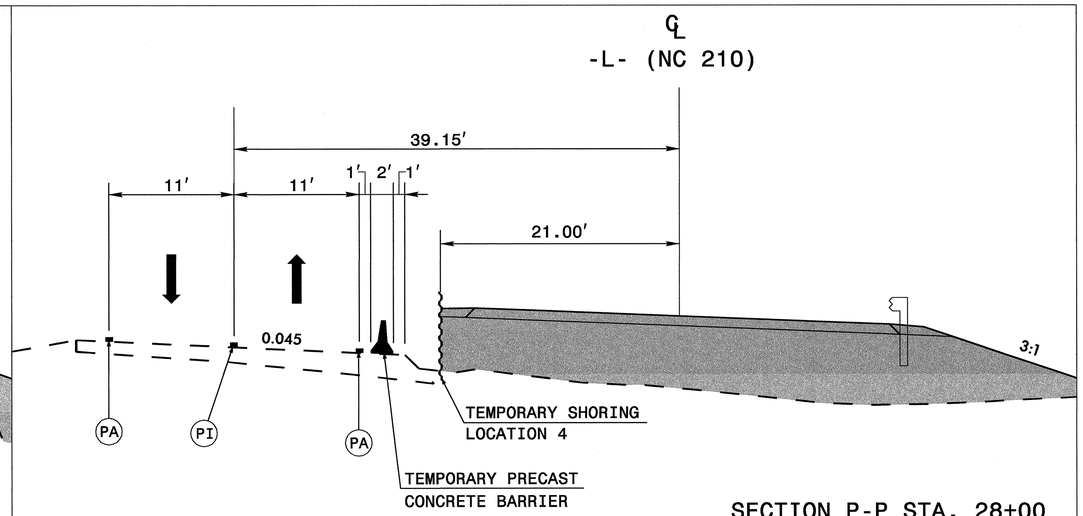

SECTION P-P STA. 28+00

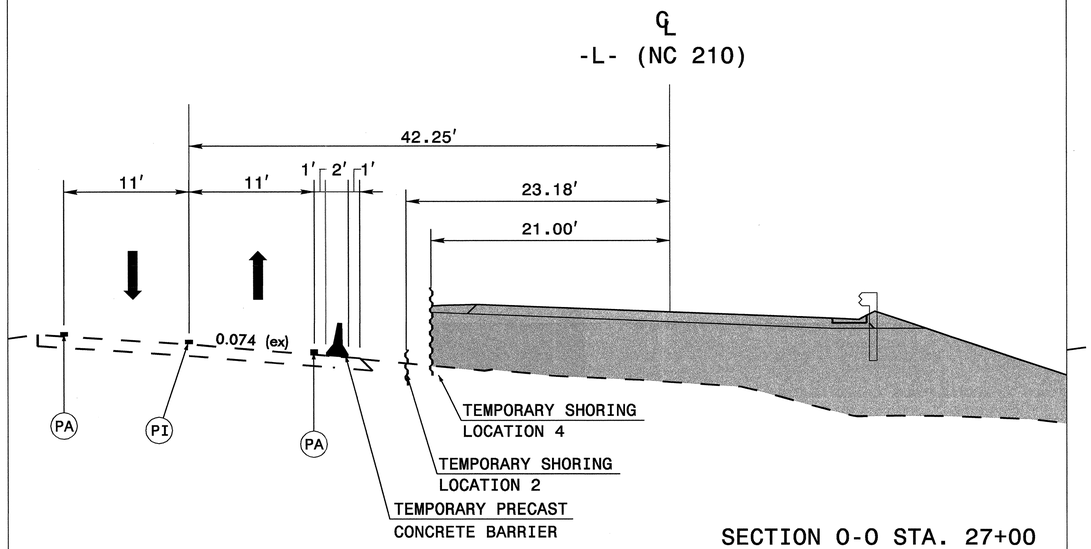

SECTION O-O STA. 27+00

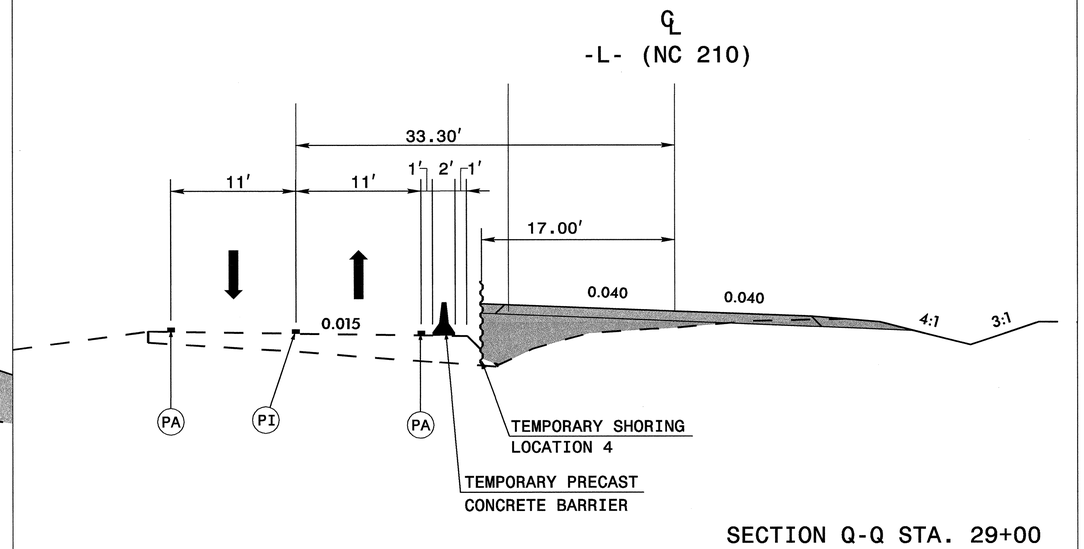

SECTION Q-Q STA. 29+00

PLAN PREPARED IN THE OFFICE OF:

PROGRESSIVE DESIGN GROUP, INC.

ENGINEERS • CONSULTANTS

APPROVED: [signature] DATE: 05/15/14

SEAL

NORTH CAROLINA PROFESSIONAL SEAL 025465 ENGINEER TIM ARE

DIVISION OF HIGHWAYS * STATE OF NORTH CAROLINA * DEPARTMENT OF TRANSPORTATION * WORK ZONE TRAFFIC CONTROL

TRANSPORTATION MANAGEMENT PLAN
PHASE II CROSS SECTIONS

PROJ. REFERENCE NO.	SHEET NO.
B-5117	TMP-14

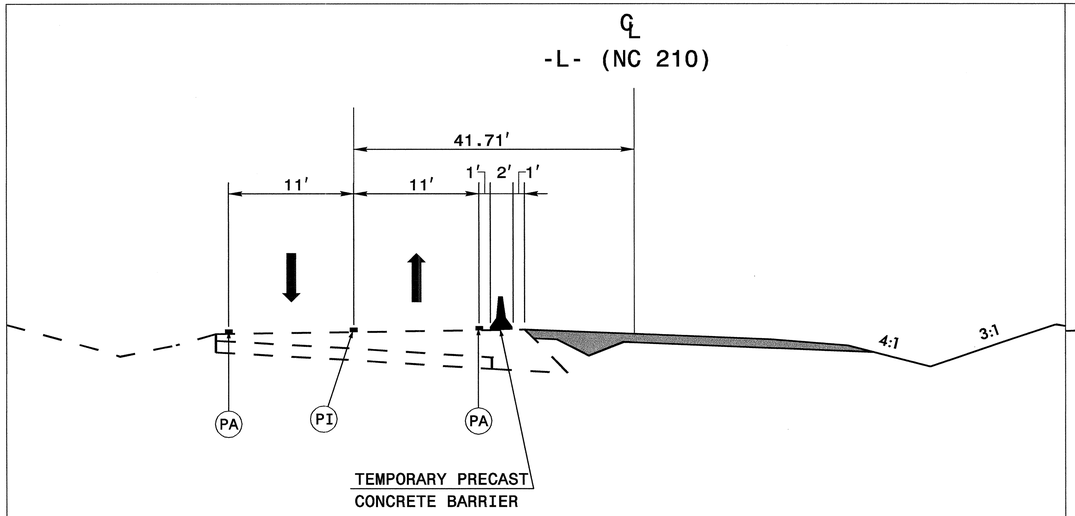

SECTION R-R STA. 30+00

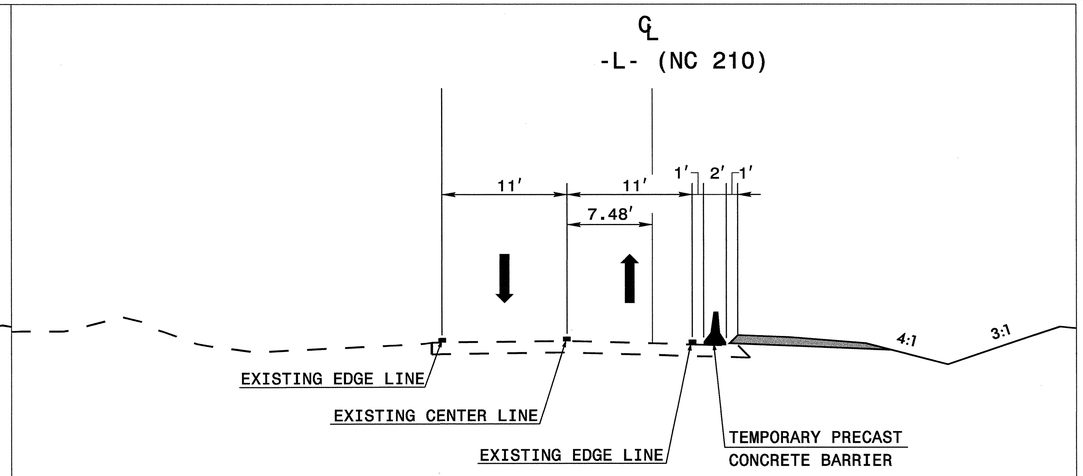

SECTION T-T STA. 32+00

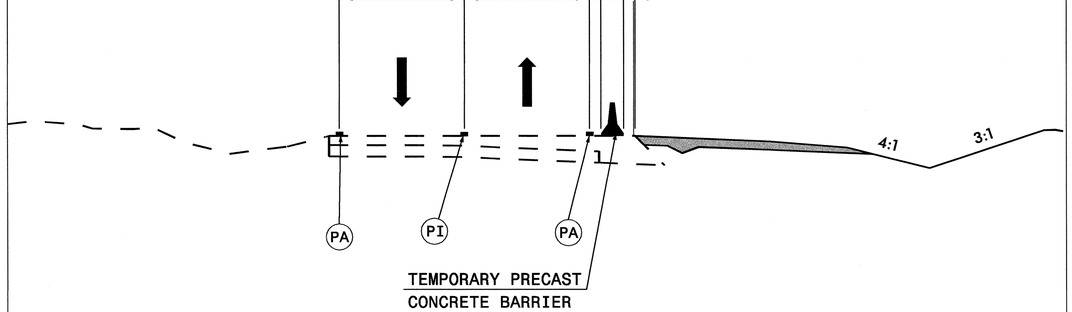

SECTION S-S STA. 31+00

PLAN PREPARED IN THE OFFICE OF:
PROGRESSIVE DESIGN GROUP, INC.
ENGINEERS • CONSULTANTS

APPROVED: [signature] DATE: 05/13/14

SEAL

NORTH CAROLINA PROFESSIONAL SEAL 025465 ENGINEER TIM AREY

DIVISION OF HIGHWAYS * STATE OF NORTH CAROLINA * DEPARTMENT OF TRANSPORTATION * WORK ZONE TRAFFIC CONTROL

TRANSPORTATION MANAGEMENT PLAN
PHASE II CROSS SECTIONS

PROJ. REFERENCE NO.	SHEET NO.
B-5117	TMP-15

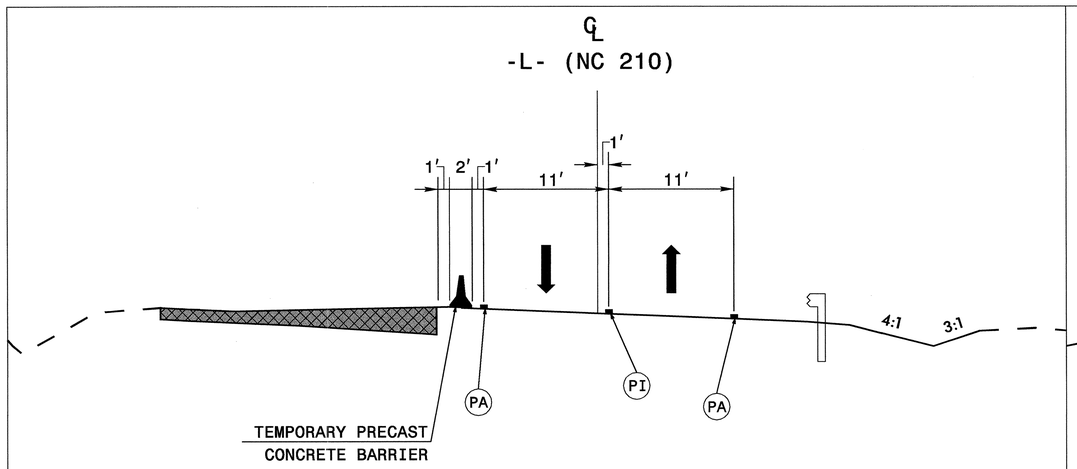

SECTION U-U STA. 23+00

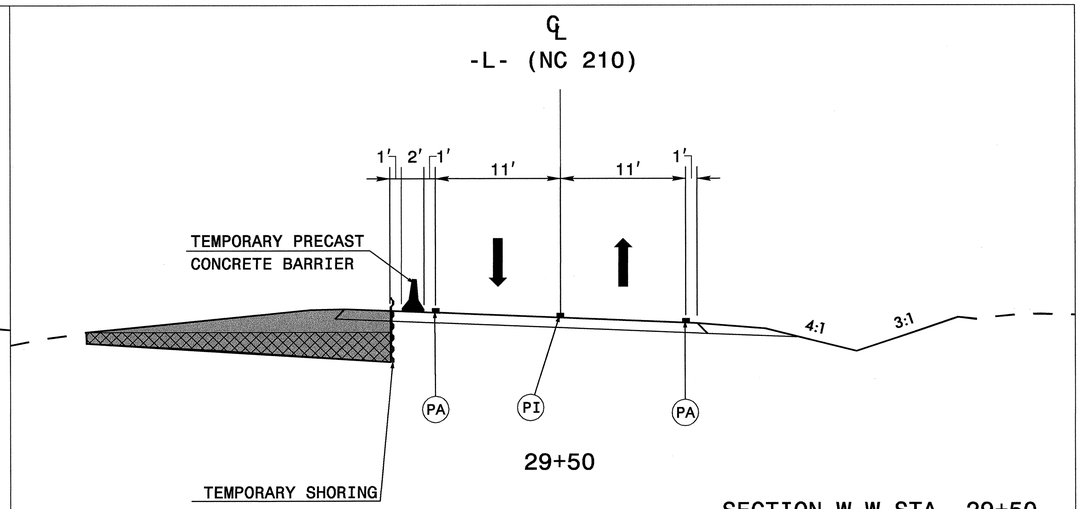

SECTION W-W STA. 29+50

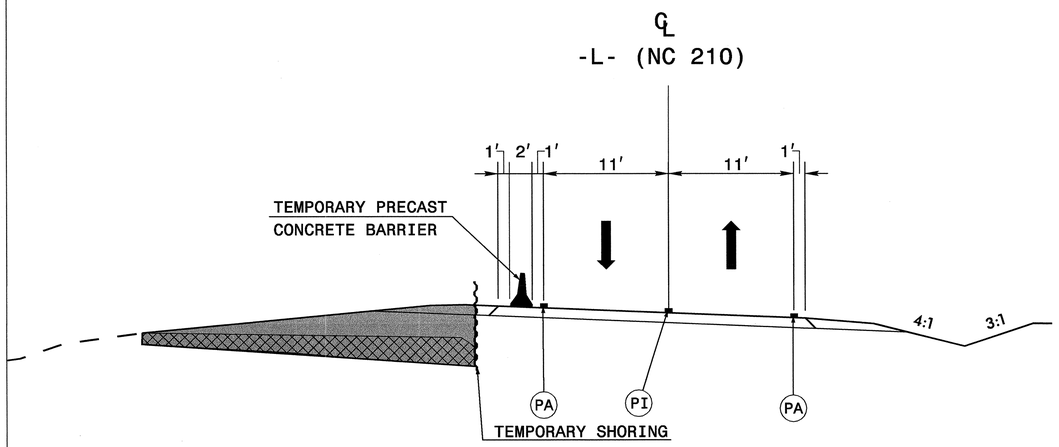

SECTION V-V STA. 29+00

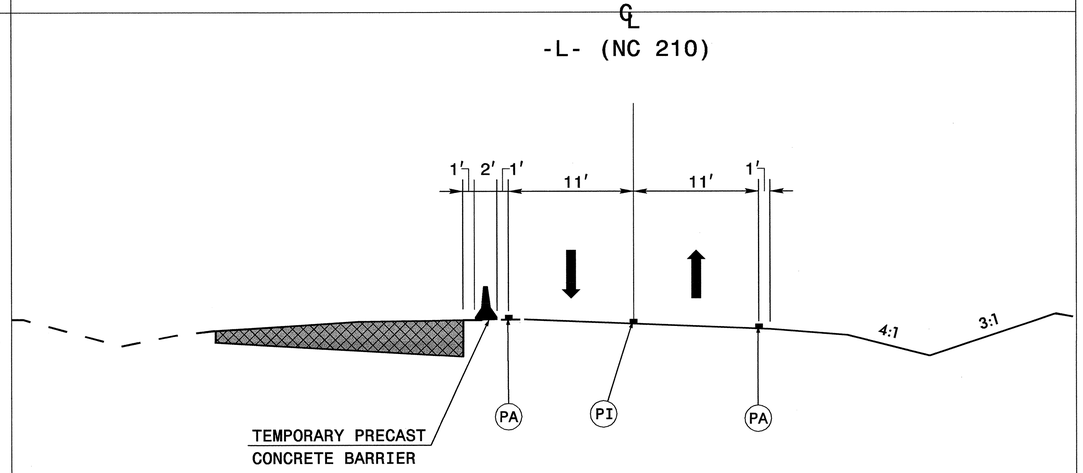

SECTION X-X STA. 30+00

PLAN PREPARED IN THE OFFICE OF:
PROGRESSIVE DESIGN GROUP, INC.
ENGINEERS • CONSULTANTS

APPROVED: _____ DATE: 05/13/14

SEAL

NORTH CAROLINA PROFESSIONAL SEAL 025465 ENGINEER TIM ARET

DIVISION OF HIGHWAYS
STATE OF NORTH CAROLINA
DEPARTMENT OF TRANSPORTATION
WORK ZONE TRAFFIC CONTROL

TRANSPORTATION MANAGEMENT PLAN
PHASE III CROSS SECTIONS

TIP NO.	SHEET NO.
B-5117	PMP-1

APPROVED: [signature]

DATE: 4-8-14

SEAL

NORTH CAROLINA PROFESSIONAL SEAL 028387 ENGINEER AYMAN I. ALQUDWAH

STATE OF NORTH CAROLINA
DEPARTMENT OF TRANSPORTATION

PAVEMENT MARKING PLAN
BLADEN COUNTY

LOCATION: BRIDGE NO. 47 ON NC 210 OVER LAKE CREEK

T.I.P.: B-5117

CONTRACT:

B-5117 PAVEMENT MARKING SCHEDULE

SYMBOL DESCRIPTION		FINAL PAVEMENT MARKINGS
TA	WHITE EDGELINE	THERMOPLASTIC (4", 90 MILS)
TI	YELLOW DOUBLE CENTER	THERMOPLASTIC (4", 120 MILS)

(MARKERS)

PERMANENT RAISED PAVEMENT MARKERS

MA	YELLOW & YELLOW

ROADWAY STANDARD DRAWING

THE FOLLOWING ROADWAY STANDARDS AS APPEAR IN "ROADWAY STANDARD DRAWINGS" - PROJECT SERVICES UNIT - N.C. DEPARTMENT OF TRANSPORTATION - RALEIGH, N.C., DATED JANUARY 2012 ARE APPLICABLE TO THIS PROJECT AND BY REFERENCE HEREBY ARE CONSIDERED A PART OF THESE PLANS:

STD. NO.	TITLE
1205.01	PAVEMENT MARKINGS - LINE TYPES AND OFFSETS
1205.02	PAVEMENT MARKINGS - 2 LANE AND MULTILANE ROADWAYS
1205.12	PAVEMENT MARKINGS - BRIDGES
1261.01	GUARDRAIL AND BARRIER DELINEATOR SPACING
1261.02	GUARDRAIL AND BARRIER DELINEATOR TYPES
1262.01	GUARDRAIL END DELINEATION
1250.01	PAVEMENT MARKER SPACING

GENERAL NOTES

THE FOLLOWING GENERAL NOTES APPLY AT ALL TIMES FOR THE DURATION OF THE CONSTRUCTION PROJECT, EXCEPT WHEN OTHERWISE NOTED IN THE PLAN, OR DIRECTED BY THE ENGINEER.

A) INSTALL PAVEMENT MARKINGS AND PAVEMENT MARKERS ON THE FINAL SURFACE AS FOLLOWS:

ROAD NAME	MARKING	MARKER
-L- NC 210	THERMOPLASTIC	RAISED MARKER
-L- BRIDGE DECK	THERMOPLASTIC	RAISED MARKER

B) TIE PROPOSED PAVEMENT MARKING LINES TO EXISTING PAVEMENT MARKING LINES.

C) REMOVE/REPLACE ANY CONFLICTING/DAMAGED PAVEMENT MARKINGS AND MARKERS.

D) PASSING ZONES WILL BE DETERMINED IN THE FIELD AND MUST BE APPROVED BY THE ENGINEER.

E) REMOVE ALL RESIDUE AND SURFACE LAITANCE BY ACCEPTABLE METHODS ON CONCRETE BRIDGE DECKS PRIOR TO PLACING THERMOPLASTIC PAVEMENT MARKING MATERIAL.

INDEX

SHEET NO.	DESCRIPTION
PMP-1	PAVEMENT MARKING PLAN TITLE AND SCHEDULE SHEET
PMP-2	PAVEMENT MARKING DETAIL

PLAN PREPARED BY: N.C.D.O.T. SIGNING AND DELINEATION UNIT

AYMAN ALQUDWAH, PE, CPM, SIGNING & DELINEATION REGIONAL ENGINEER

BASIR A. RASHID SIGNING & DELINEATION PROJECT DESIGN ENGINEER

STATE OF NORTH CAROLINA DEPARTMENT OF TRANSPORTATION

12-MAR-2014 08:21
P:\TIPProjects-B\B5117\Traffic\Signing\CADD\PMP\B5117_Sgn_PMP_PMP-1.dgn
brashid AT TE274912

TIP NO.	SHEET NO.
B-5117	PMP-2

APPROVED: Ayman Alqudwah

DATE: 4-08-14

SEAL

NORTH CAROLINA PROFESSIONAL SEAL 028387 ENGINEER AYMAN I. ALQUDWAH

BEGIN MARKINGS (B–5117)
–L– POT STA 16+00.00 +/–
TIE TO EXISTING

BEGIN BRIDGE
–L– POT STA 25+62.21

END BRIDGE
–L– POT STA 26+69.79

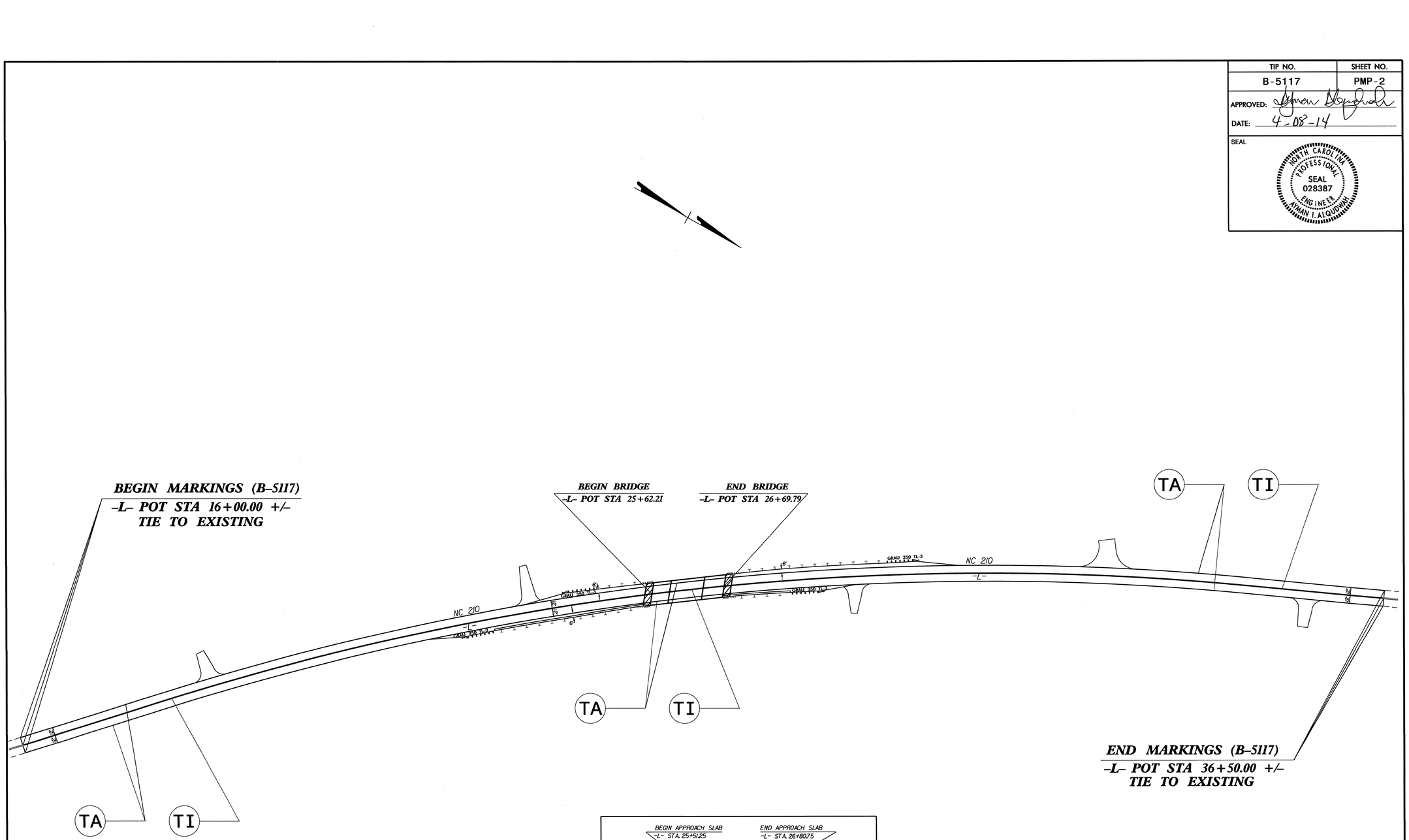

END MARKINGS (B–5117)
–L– POT STA 36+50.00 +/–
TIE TO EXISTING

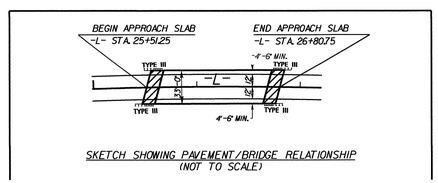

SKETCH SHOWING PAVEMENT/BRIDGE RELATIONSHIP
(NOT TO SCALE)

PAVEMENT MARKING DETAIL

12-MAR-2014 08:21
P:\TIPProjects-B\B5117\Traffic\Signing\CADD\PMP\B5117_Sgn_PMP_PMP-2.dgn
brashid AT TE27412

STATE	STATE PROJECT REFERENCE NO.	SHEET NO.	TOTAL SHEETS
N.C.	B-5117	EC-1	

STATE PROJ. NO.	F.A. PROJ. NO.	DESCRIPTION

TIP PROJECT: B-5117

STATE OF NORTH CAROLINA
DIVISION OF HIGHWAYS

PLAN FOR PROPOSED
HIGHWAY EROSION CONTROL

BLADEN COUNTY

LOCATION: BRIDGE NO. 47 OVER LAKE CREEK ON NC 210

TYPE OF WORK: GRADING, DRAINAGE, PAVING AND STRUCTURE

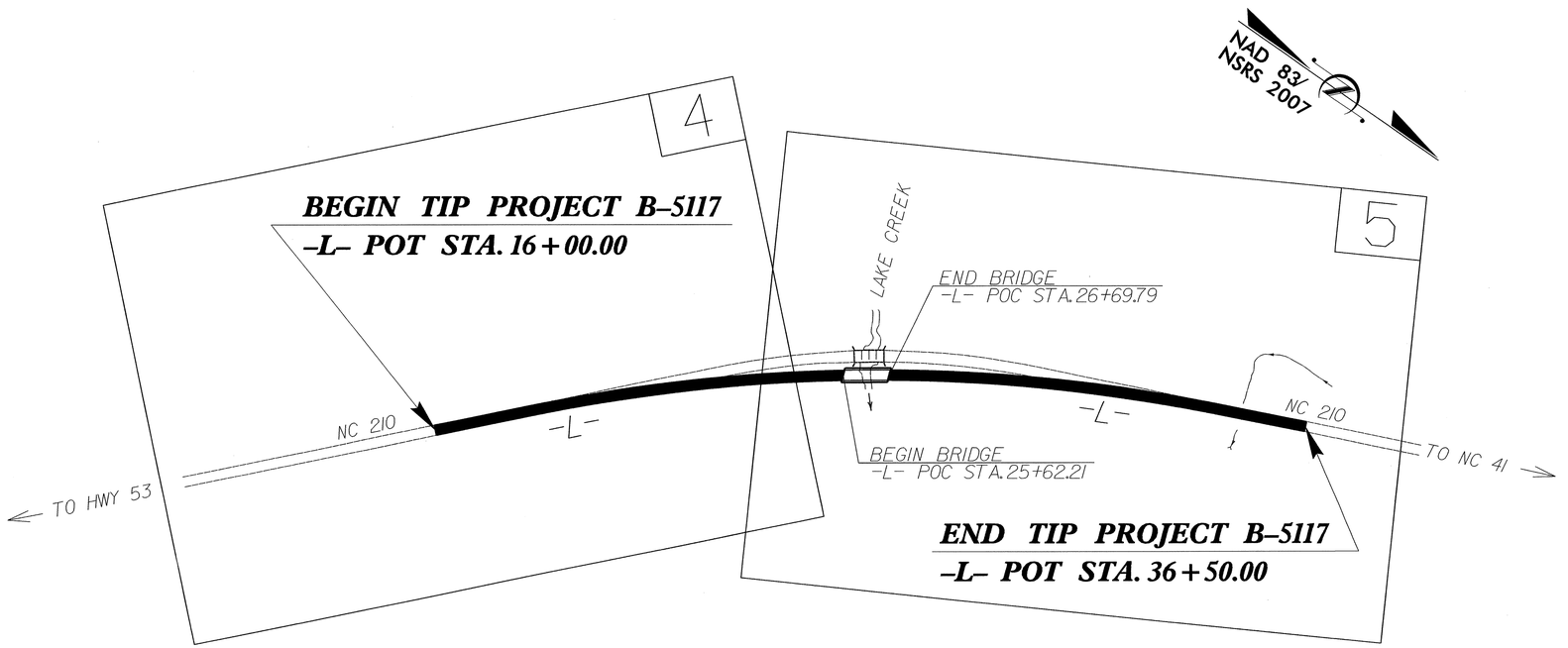

EROSION AND SEDIMENT CONTROL MEASURES

Std. #	Description	Symbol
1630.03	Temporary Silt Ditch	TSD
1630.05	Temporary Diversion	TD
1605.01	Temporary Silt Fence	
1606.01	Special Sediment Control Fence	
1622.01	Temporary Berms and Slope Drains	
1630.02	Silt Basin Type B	
1633.01	Temporary Rock Silt Check Type-A	
	Temporary Rock Silt Check Type-A with Matting and Polyacrylamide (PAM)	
1633.02	Temporary Rock Silt Check Type-B	
	Wattle / Coir Fiber Wattle	EW CFW
	Wattle / Coir Fiber Wattle with Polyacrylamide (PAM)	
1634.01	Temporary Rock Sediment Dam Type-A	
1634.02	Temporary Rock Sediment Dam Type-B	
1635.01	Rock Pipe Inlet Sediment Trap Type-A	
1635.02	Rock Pipe Inlet Sediment Trap Type-B	
1630.04	Stilling Basin	
1630.06	Special Stilling Basin	
	Rock Inlet Sediment Trap:	
1632.01	Type A	A
1632.02	Type B	B
1632.03	Type C	C
	Skimmer Basin	
	Tiered Skimmer Basin	
	Infiltration Basin	

THIS PROJECT CONTAINS EROSION CONTROL PLANS FOR CLEARING AND GRUBBING PHASE OF CONSTRUCTION.

ENVIRONMENTALLY SENSITIVE AREA(S) EXIST ON THIS PROJECT

Refer To E. C. Special Provisions for Special Considerations.

GRAPHIC SCALE

0
PLANS

0
PROFILE (HORIZONTAL)

0
PROFILE (VERTICAL)

ROADSIDE ENVIRONMENTAL UNIT
DIVISION OF HIGHWAYS
STATE OF NORTH CAROLINA

THESE EROSION AND SEDIMENT CONTROL PLANS COMPLY WITH THE REGULATIONS SET FORTH BY THE NCG-010000 GENERAL CONSTRUCTION PERMIT EFFECTIVE AUGUST 3, 2011 ISSUED BY THE NORTH CAROLINA DEPARTMENT OF ENVIRONMENT AND NATURAL RESOURCES DIVISION OF WATER QUALITY.

Prepared in the Office of:

ROADSIDE ENVIRONMENTAL UNIT
1 South Wilmington St.
Raleigh, NC 27611

2012 STANDARD SPECIFICATIONS

Roadway Standard Drawings

The following roadway english standards as appear in "Roadway Standard Drawings"– Roadway Design Unit – N. C. Department of Transportation – Raleigh, N. C., dated January 2012 and the latest revison thereto are applicable to this project and by reference hereby are considered a part of these plans.

1604.01	Railroad Erosion Control Detail	1632.01	Rock Inlet Sediment Trap Type A
1605.01	Temporary Silt Fence	1632.02	Rock Inlet Sediment Trap Type B
1606.01	Special Sediment Control Fence	1632.03	Rock Inlet Sediment Trap Type C
1607.01	Gravel Construction Entrance	1633.01	Temporary Rock Silt Check Type A
1622.01	Temporary Berms and Slope Drains	1633.02	Temporary Rock Silt Check Type B
1630.01	Riser Basin	1634.01	Temporary Rock Sediment Dam Type A
1630.02	Silt Basin Type B	1634.02	Temporary Rock Sediment Dam Type B
1630.03	Temporary Silt Ditch	1635.01	Rock Pipe Inlet Sediment Trap Type A
1630.04	Stilling Basin	1635.02	Rock Pipe Inlet Sediment Trap Type B
1630.05	Temporary Diversion	1640.01	Coir Fiber Baffle
1630.06	Special Stilling Basin	1645.01	Temporary Stream Crossing
1631.01	Matting Installation		

06-MAY-2014 15:12
R:\Environmental\Design\B-5117_EC_tsh.dgn
Jagoodwin AT RENV27413

PROJECT REFERENCE NO.	SHEET NO.
B-5117	EC-02
RW SHEET NO.	
[redacted] ENGINEER	[redacted] ENGINEER

SKIMMER BASIN WITH BAFFLES DETAIL (EAST)

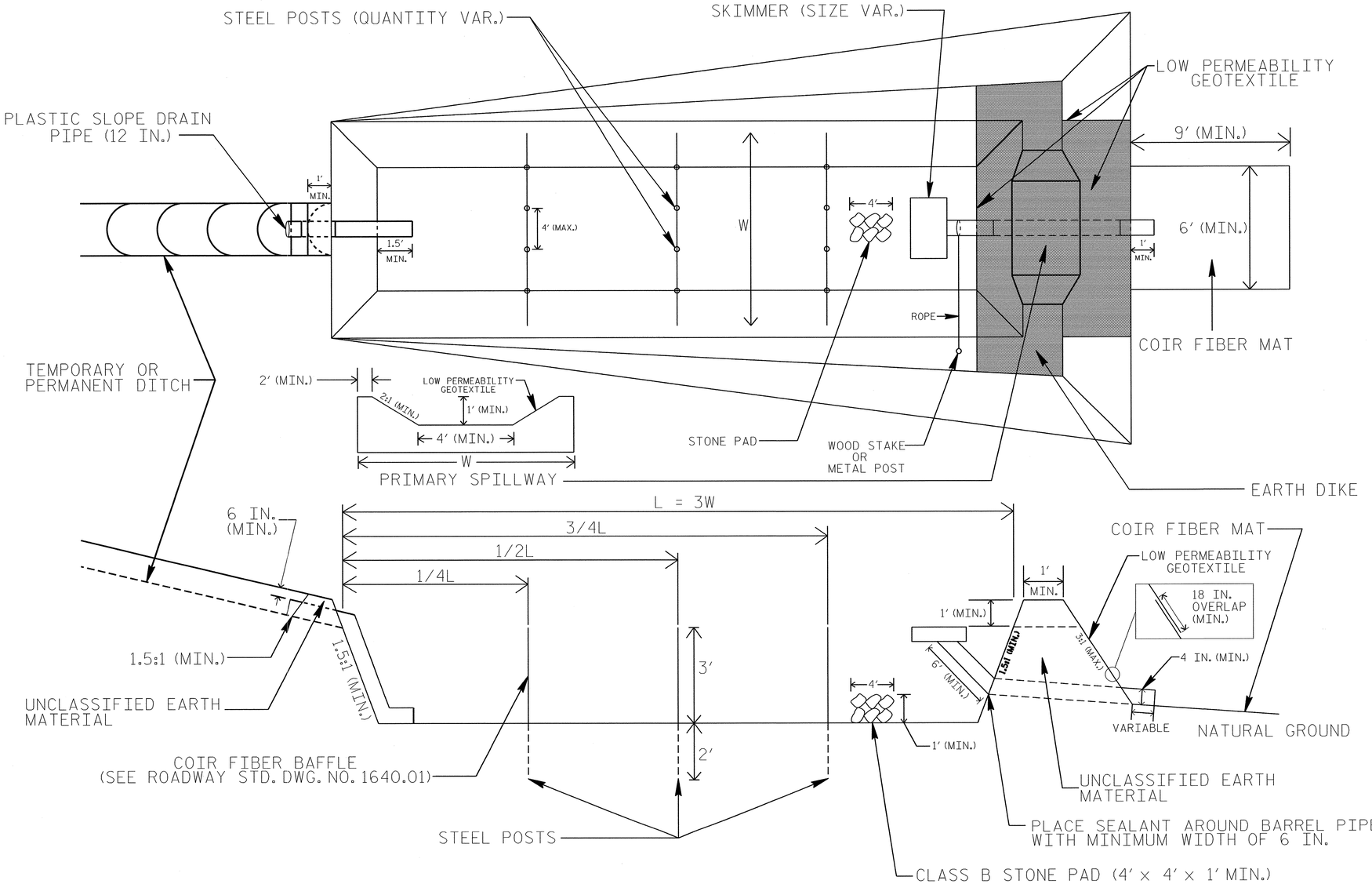

2" x 2" (nominal) WOODEN STAKE

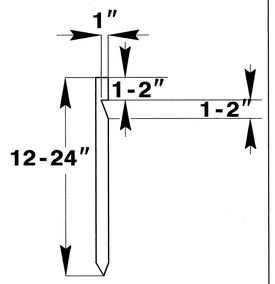

#10 STEEL REINFORCEMENT BAR

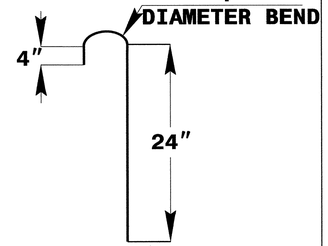

1" (nominal) STAPLE

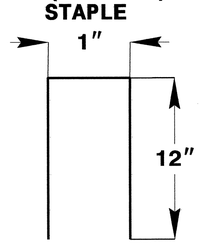

COIR FIBER MAT ANCHOR OPTIONS

NOTES

1. SEED AND PLACE MATTING FOR EROSION CONTROL ON INTERIOR AND EXTERIOR SIDESLOPES.
2. LIMIT EARTH DIKE HEIGHT TO 5 FT.
3. FOR BASIN DEPTH OF 3 FT., THE MINIMUM BASIN WIDTH SHALL BE 9 FT.
4. DETERMINE PRIMARY SPILLWAY WEIR LENGTH (FT.) USING Q/0.4, WHERE Q IS FLOW RATE (CFS) INTO BASIN.
5. PLASTIC SLOPE DRAIN PIPE AT INLET OF BASIN MAY BE REPLACED BY FILTRATION GEOTEXTILE OR TARP AS DIRECTED.
6. LOW PERMEABILITY GEOTEXTILE FOR PRIMARY SPILLWAY SHALL BE ONE CONTINUOUS PIECE OF MATERIAL OR OVERLAPPED 18 IN. (MIN.).

NOT TO SCALE

PROJECT REFERENCE NO.	SHEET NO.
B-5117	EC-2A
RW SHEET NO.	
~~ROADWAY DESIGN ENGINEER~~	~~HYDRAULICS ENGINEER~~

COIR FIBER WATTLE WITH POLYACRYLAMIDE (PAM) DETAIL

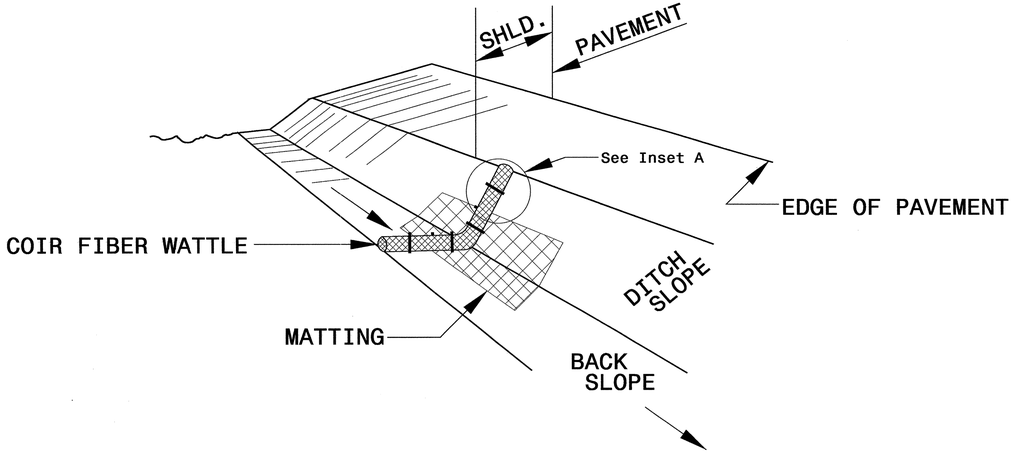

ISOMETRIC VIEW

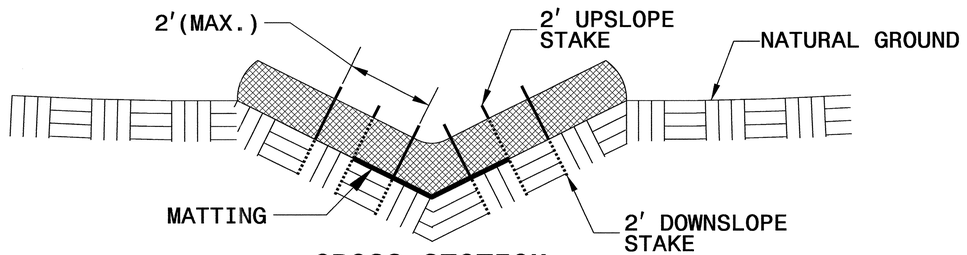

CROSS SECTION VEE DITCH

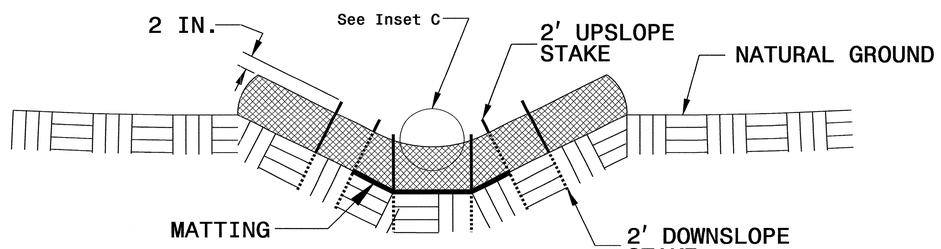

CROSS SECTION TRAPEZOIDAL DITCH

NOTES:

USE MINIMUM 12 IN. DIAMETER COIR FIBER (COCONUT FIBER) WATTLE.

USE 2 FT. WOODEN STAKES WITH A 2 IN. BY 2 IN. NOMINAL CROSS SECTION.

ONLY INSTALL WATTLE(S) TO A HEIGHT IN DITCH SO FLOW WILL NOT WASH AROUND WATTLE AND SCOUR DITCH SLOPES AND AS DIRECTED.

INSTALL A MINIMUM OF 2 UPSLOPE STAKES AND 4 DOWNSLOPE STAKES AT AN ANGLE TO WEDGE WATTLE TO BOTTOM OF DITCH.

PROVIDE STAPLES MADE OF 0.125 IN. DIAMETER STEEL WIRE FORMED INTO A U SHAPE NOT LESS THAN 12" IN LENGTH.

INSTALL STAPLES APPROXIMATELY EVERY 1 LINEAR FOOT ON BOTH SIDES OF WATTLE AND AT EACH END TO SECURE IT TO THE SOIL.

INSTALL MATTING IN ACCORDANCE WITH SECTION 1631 OF THE STANDARD SPECIFICATIONS.

PRIOR TO POLYACRYLAMIDE (PAM) APPLICATION, OBTAIN A SOIL SAMPLE FROM PROJECT LOCATION, AND FROM OFFSITE MATERIAL, AND ANALYZE FOR APPROPRIATE PAM FLOCCULANT TO BE APPLIED TO EACH WATTLE.

INITIALLY APPLY 2 OUNCES OF ANIONIC OR NEUTRALLY CHARGED PAM OVER WATTLE WHERE WATER WILL FLOW AND 1 OUNCE OF PAM ON MATTING ON EACH SIDE OF WATTLE. REAPPLY PAM AFTER EVERY RAINFALL EVENT THAT IS EQUAL TO OR EXCEEDS 0.50 IN.

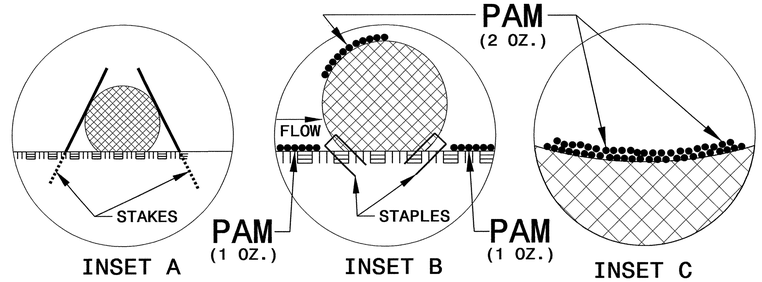

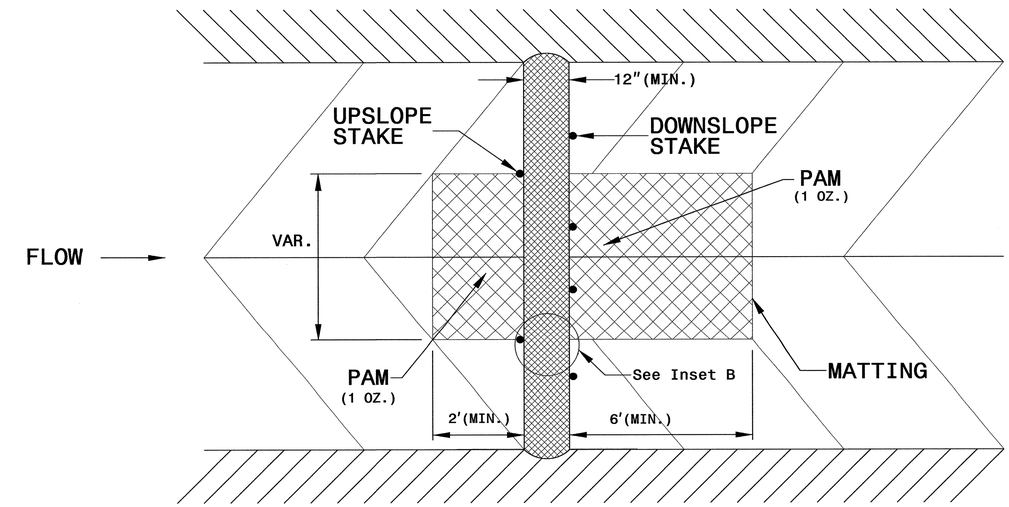

TOP VIEW

PROJECT REFERENCE NO.	SHEET NO.
B-5117	EC-2B
R/W SHEET NO.	
~~ROADWAY DESIGN ENGINEER~~	~~STRUCTURES ENGINEER~~

SILT FENCE COIR FIBER WATTLE BREAK DETAIL

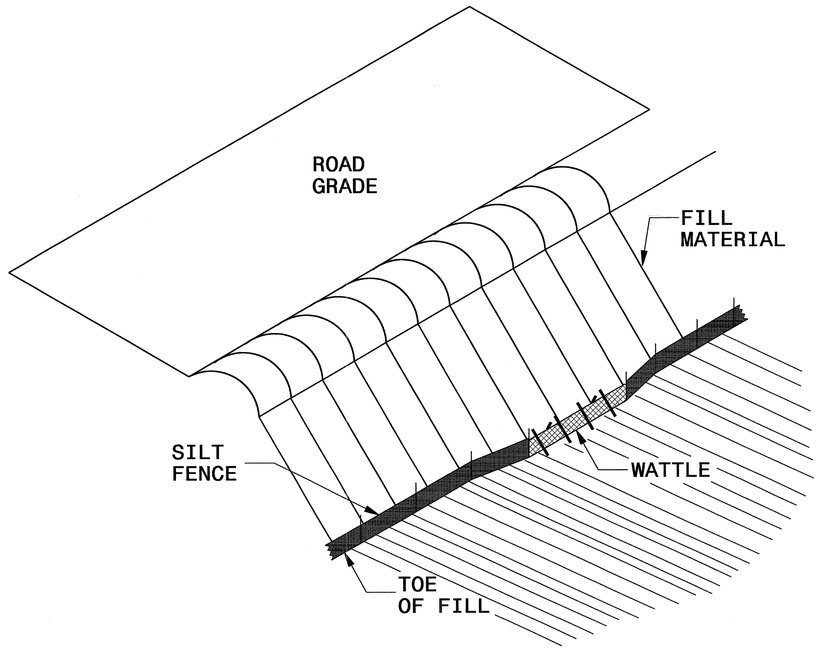

ISOMETRIC VIEW

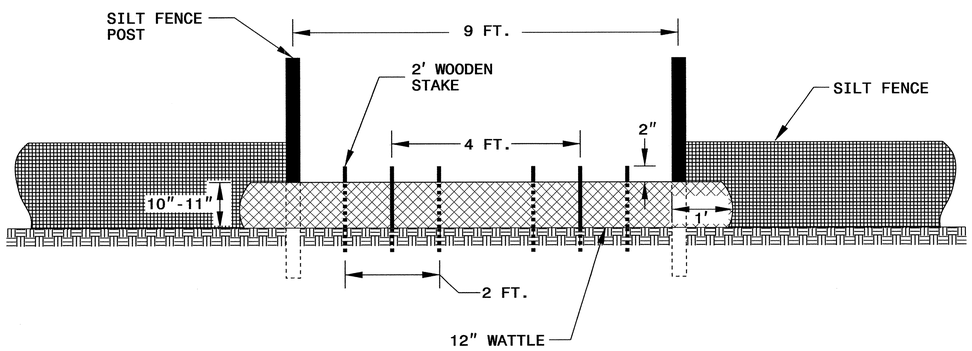

VIEW FROM SLOPE

NOTES:

USE MINIMUM 12 IN. DIAMETER COIR FIBER (COCONUT FIBER) WATTLE AND LENGTH OF 10 FT.

EXCAVATE A 1 TO 2 INCH TRENCH FOR WATTLE TO BE PLACED.

DO NOT PLACE WATTLE ON TOE OF SLOPE.

USE 2 FT. WOODEN STAKES WITH A 2 IN. BY 2 IN. NOMINAL CROSS SECTION.

INSTALL A MINIMUM OF 2 UPSLOPE STAKES AND 4 DOWNSLOPE STAKES AT AN ANGLE TO WEDGE WATTLE TO GROUND.

PROVIDE STAPLES MADE OF 0.125 IN. DIAMETER STEEL WIRE FORMED INTO A U SHAPE NOT LESS THAN 12" IN LENGTH.

INSTALL STAPLES APPROXIMATELY EVERY 1 LINEAR FOOT ON BOTH SIDES OF WATTLE AND AT EACH END TO SECURE IT TO THE SOIL.

WATTLE INSTALLATION CAN BE ON OUTSIDE OF THE SILT FENCE AS DIRECTED.

INSTALL TEMPORARY SILT FENCE IN ACCORDANCE WITH SECTION 1605 OF THE STANDARD SPECIFICATIONS.

INSET A

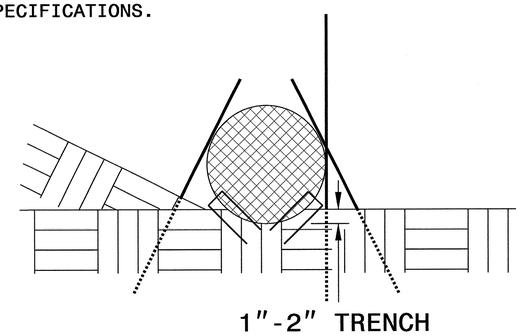

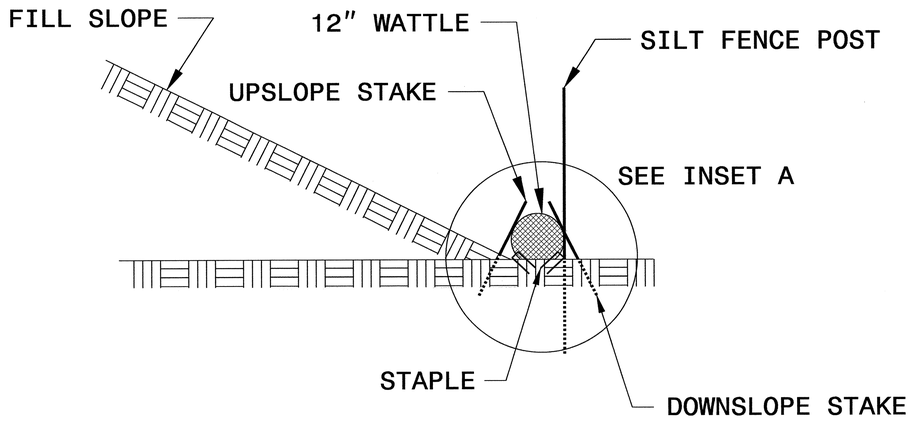

SIDE VIEW

PROJECT REFERENCE NO.	SHEET NO.
B-5117	EC-03
ROADWAY DESIGN ENGINEER	STRUCTURES ENGINEER

DIVISION OF HIGHWAYS
STATE OF NORTH CAROLINA

SOIL STABILIZATION TIMEFRAMES

SITE DESCRIPTION	STABILIZATION TIME	TIMEFRAME EXCEPTIONS
PERIMETER DIKES, SWALES, DITCHES AND SLOPES	7 DAYS	NONE
HIGH QUALITY WATER (HQW) ZONES	7 DAYS	NONE
SLOPES STEEPER THAN 3:1	7 DAYS	IF SLOPES ARE 10' OR LESS IN LENGTH AND ARE NOT STEEPER THAN 2:1, 14 DAYS ARE ALLOWED.
SLOPES 3:1 OR FLATTER	14 DAYS	7 DAYS FOR SLOPES GREATER THAN 50' IN LENGTH.
ALL OTHER AREAS WITH SLOPES FLATTER THAN 4:1	14 DAYS	NONE, EXCEPT FOR PERIMETERS AND HQW ZONES.

NOTE:
PLACE TEMPORARY ROCK SEDIMENT DAMS TYPE – B AND TEMPORARY ROCK SILT CHECKS TYPE – A AT DRAINAGE OUTLETS.

CLEARING AND GRUBBING
EROSION CONTROL FOR
CONSTRUCTION SHEET 04

PROJECT REFERENCE NO.	SHEET NO.
B-5117	EC-04/CONST.04
R/W SHEET NO.	
ROADWAY DESIGN ENGINEER	[redacted] ENGINEER

NAD 83/NSRS 2007

S 33°53'17" W
340.20'

4
SLEEPY CREEK FARMS INC.

N 49°10'11" W
442.02'

S 23°53'17" W
528.33'

N 30°22'50" E
300.00'

10+00

15+00

20+00

1
CHESTER BARNHILL
CLAUDIA H.

2
TRIPLE B LAND COMPANY LLC.

S 37°41'24" W
1888.58'

-L- STA.24+00.00

WOODS

BL-1

BL-2

+L- +65 70' RT

+L- +10 80' RT

+L- +23.88 46' RT

+L- +30 EX. R/W

+L- +60 EX. R/W

+L- +55 92' RT

+L- +81 EXIST. R/W

+57.95

+49.59

+52.42

+62.02

EXISTING R/W

TUE

TO HWY 53

NC 210 -L- N 46° 34' 09.3" W
2.37' BST

60.00'

18 POT

T FO

F

C

50' TAPER

+L- +00 EX. R/W & 50'

+L- +31.59 50'

Special Cut Ditch
See Detail "A"

-L- POT Sta.10+00.00

BEGIN PROJECT B-5117
-L- POT STA. 16+00.00

-L- PC Sta.18+31.59

3
L.G. BEATTY ESTATE

+L- +50 50' & 75'

5x15'
CLASS 1 RIP RAP PAD
EST. 6 TONS
19 SY GEOTEXTILE

SHOULDER BERM GUTTER
-L- STA.23+25.00 TO
BEGIN OF APPROACH SLAB (RT.)

MATCH LINE

SEE SHEET NO.5

70 x 24 x 3
1.5 inch Skimmer
with 1.125 inch
Orifice Diameter
16 ft. weir
ID 4.1C

DETAIL "A"
SPECIAL CUT DITCH
(Not to Scale)

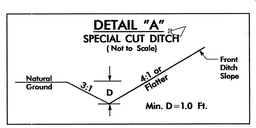

-L- STA. 16+50 TO -L- STA. 23+11 (RT.)

NOTE: SEE SHEET 6 FOR -L- PROFILE

06-MAY-2014 15:15
R:\EU Projects\Design\B-5117_EC_psh4.dgn
Projection: NAD83 NCSP FEET
Design: AP RENY 2014 13

PROJECT REFERENCE NO.	SHEET NO.
B-5117	EC-05/CONST.05
RW SHEET NO.	
~~ROADWAY DESIGN ENGINEER~~	~~HYDRAULICS ENGINEER~~

NOTE:
UTILIZE SKIMER BASIN OR SPECIAL STILLING BASIN(S) AS STILLING BASIN WHERE APPLICABLE.

NOTE:
PLACE TEMPORARY ROCK SEDIMENT DAMS TYPE – B AND TEMPORARY ROCK SILT CHECKS TYPE – A AT DRAINAGE OUTLETS.

CLEARING AND GRUBBING EROSION CONTROL FOR CONSTRUCTION SHEET 05

NAD 83/NSRS 2007

INSTALL PIPE(S) IN JURISDICTIONAL AREAS WITHOUT IMPACTING STREAM UNTIL AREA STABILIZED AND ACCORDING TO NCDOT BEST MANAGEMENT PRACTICES FOR CONSTRUCTION AND MAINTENANCE ACTIVITIES MANUAL.

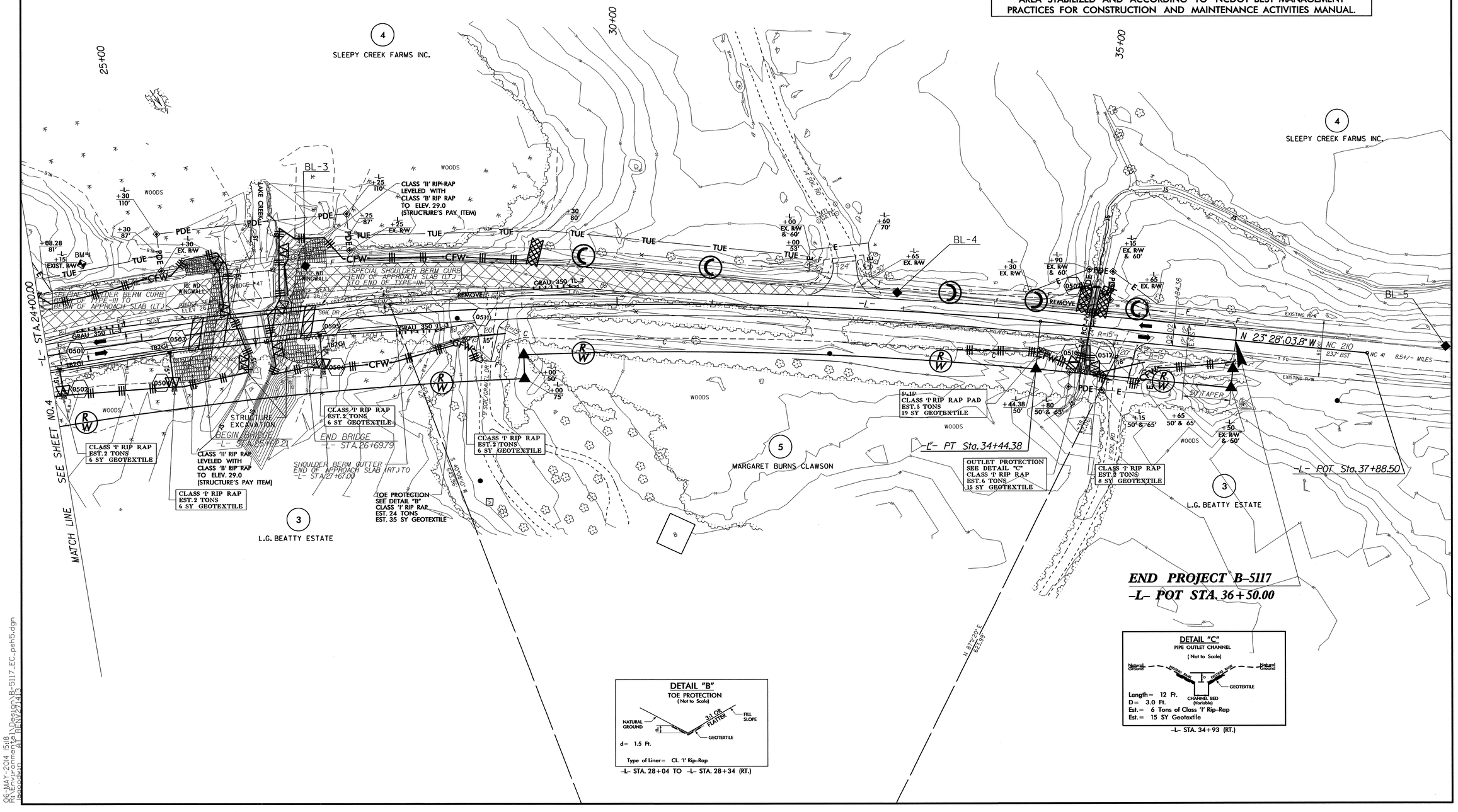

DETAIL "B"
TOE PROTECTION
(Not to Scale)

d = 1.5 Ft.
Type of Liner = CL. 'I' Rip-Rap
-L- STA. 28+04 TO -L- STA. 28+34 (RT.)

DETAIL "C"
PIPE OUTLET CHANNEL
(Not to Scale)

Length = 12 Ft.
D = 3.0 Ft.
Est. = 6 Tons of Class 'I' Rip-Rap
Est. = 15 SY Geotextile
-L- STA. 34+93 (RT.)

06-MAY-2014 15:18
N:\Environmental\Projects\B-5117_EC_psh5.dgn
ncdot4u0 ATREVINO14.03

PROJECT REFERENCE NO.	SHEET NO.
B-5117	EC-06/CONST.04
RW SHEET NO.	
~~ROADWAY DESIGN ENGINEER~~	~~HYDRAULICS ENGINEER~~

NOTE:
PLACE TEMPORARY ROCK SEDIMENT DAMS TYPE – B AND TEMPORARY ROCK SILT CHECKS TYPE – A AT DRAINAGE OUTLETS.

NAD 83/NSRS 2007

10+00

15+00

20+00

1
CHESTER BARNHILL
CLAUDIA H.

2
TRIPLE B LAND COMPANY LLC.

3
L.G. BEATTY ESTATE

4
SLEEPY CREEK FARMS INC.

S 33°35'11" W
340.10'

N 49°10'11" W
442.02'

S 23°55'17" W
386.33'

N 30°02'50" E
342.75'

S 34°42'24" W
386.36'

WOODS

BL-1

BL-2

+65
70'

+10
80'

+23.88
46'

+30
EX. R/W

+60
EX. R/W

+51
EXIST. R/W

+52.95
77'

+55
92'

+00
100'

+00
EX. R/W
& 50'

+31.59
50'

+50
50' & 75'

+85.55
70.00'

+49.59

120'

EXISTING R/W

TUE

F

C

T FO

TO HWY 53

NC 210
2.37' BST

-L- N 46° 34' 09.3" W

60.00'

12'
EXIST.

22.02'

50' TAPER

Special Cut Ditch
See Detail "A"

-L- POT Sta.10+00.00

BEGIN PROJECT B-5117
-L- POT STA. 16+00.00

-L- PC Sta.18+31.59

-L- STA.24+00.00

SEE SHEET NO.5

MATCH LINE

GRAU 350 TL

5'x15'
CLASS 'I' RIP RAP PAD
EST. 5 TONS
19 SY GEOTEXTILE

SHOULDER BERM GUTTER
-L- STA.23+23.00 TO
BEGIN OF APPROACH SLAB (RT.)

70 x 24 x 3
1.5 inch Skimmer
with 1.125 inch
Orifice Diameter
16 ft. weir
ID 4.1C

NOTE: SEE SHEET 6 FOR -L- PROFILE

DETAIL "A"
SPECIAL CUT DITCH
(Not to Scale)

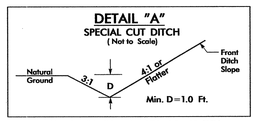

-L- STA. 16+50 TO -L- STA. 23+11 (RT.)

06-MAY-2014 15:17
H:\Environmental\Design\B-5117_EC_psh4.dgn
bpowell
41.21W/24.13

NOTE:
UTILIZE SKIMER BASIN OR SPECIAL STILLING BASIN(S) AS STILLING BASIN WHERE APPLICABLE.

PROJECT REFERENCE NO.	SHEET NO.
B-5117	EC-07/CONST.05
R/W SHEET NO.	
~~ROADWAY DESIGN ENGINEER~~	~~HYDRAULICS ENGINEER~~

NAD 83/NSRS 2007

Place Matting for Erosion Control on Slopes Adjacent to Permitted Wetlands as Work Allows.

Place Matting for Erosion Control on Slope as Work Allows. Sta. 34+45 to Sta. 35+50

Place Matting for Erosion Control on Slope as Work Allows. Sta. 34+45+XX to Sta. 35+25

-L- STA.24+00.00

25+00

30+00

35+00

SEE SHEET NO.4

MATCH LINE

4 SLEEPY CREEK FARMS INC.

3 L.G. BEATTY ESTATE

5 MARGARET BURNS CLAWSON

BL-3

BL-4

BL-5

LAKE CREEK

WOODS

JS

TUE

CFW

PDE

CLASS 'II' RIP-RAP LEVELED WITH CLASS 'B' RIP RAP TO ELEV. 29.0 (STRUCTURE'S PAY ITEM)

SPECIAL SHOULDER BERM CURB END OF APPROACH SLAB (LTJ) TO END OF TYPE-III

SPECIAL SHOULDER BERM CURB BEGIN TYP. TYPE-III TO BEGIN OF APPROACH SLAB (LTJ)

GRAU 350 TL-3

REMOVE

18' WD WINGWALL

BRIDGE #47

BRIDGE SEAT ELEV 26.14

BRIDGE ELEV 26.47

CFW=3.04'

STRUCTURE EXCAVATION
BEGIN BRIDGE
-L- STA.25+62.21

END BRIDGE
-L- STA.26+69.79

SHOULDER BERM GUTTER
END OF APPROACH SLAB (RT)TO
-L- STA.27+67.00

CLASS 'I' RIP RAP
EST.2 TONS
6 SY GEOTEXTILE

CLASS 'II' RIP RAP
LEVELED WITH
CLASS 'B' RIP RAP
TO ELEV. 29.0
(STRUCTURE'S PAY ITEM)

TOE PROTECTION
SEE DETAIL "B"
CLASS 'I' RIP RAP
EST. 24 TONS
EST. 35 SY GEOTEXTILE

CLASS 'I' RIP RAP
EST.2 TONS
6 SY GEOTEXTILE

5'x15'
CLASS 'I' RIP RAP PAD
EST.5 TONS
19 SY GEOTEXTILE

OUTLET PROTECTION
SEE DETAIL "C"
CLASS 'I' RIP RAP
EST. 6 TONS
15 SY GEOTEXTILE

CLASS 'I' RIP RAP
EST.2 TONS
8 SY GEOTEXTILE

-L- PT Sta.34+44.38

-L- POT Sta.37+88.50

EXISTING R/W

50' TAPER

NC 210

N 23°28'03.8" W

23.7' BST

NC 41 8.5+/- MILES

S 40°08'07" W 643.98'

N 81°16'01" E 623.99'

END PROJECT B-5117
-L- POT STA. 36+50.00

DETAIL "B"
TOE PROTECTION
(Not to Scale)

NATURAL GROUND
3:1 OR FLATTER
FILL SLOPE
GEOTEXTILE
d = 1.5 Ft.

Type of Liner= CL. 'I' Rip-Rap

-L- STA. 28+04 TO -L- STA. 28+34 (RT.)

DETAIL "C"
PIPE OUTLET CHANNEL
(Not to Scale)

Natural Ground
Ground Line
Natural Ground
GEOTEXTILE
CHANNEL BED (Variable)

Length= 12 Ft.
D= 3.0 Ft.
Est.= 6 Tons of Class 'I' Rip-Rap
Est.= 15 SY Geotextile

-L- STA. 34+93 (RT.)

RR-MAY-2014 15:19
R:\Roadway Templates\Design\B-5117_EC_pst5.dgn
Roadway Templates
ALBEN/2/1/13

T.I.P.: B-5117

CONTRACT:

STATE OF NORTH CAROLINA
DEPARTMENT OF TRANSPORTATION

TIP NO.	SHEET NO.
B-5117	SIGN-1

APPROVED: Ayman Alqudwah

DATE: 4-8-14

SEAL

NORTH CAROLINA PROFESSIONAL SEAL 028387 ENGINEER AYMAN I. ALQUDWAH

SIGNING PLAN
BLADEN COUNTY
LOCATION: BRIDGE NO. 47 ON NC 210 OVER LAKE CREEK

SUMMARY OF QUANTITIES

ITEM NO. DESC. NO.	ITEM NO. SECT. NO.	ITEM DESCRIPTION	QUANTITY	UNIT
4155000000	907	DISPOSAL OF SIGN SYSTEM, U-CHANNEL	6	EA.

ROADWAY STANDARD DRAWING

THE FOLLOWING ROADWAY STANDARDS AS APPEAR IN "ROADWAY STANDARD DRAWINGS" - PROJECT SERVICES UNIT - N.C. DEPARTMENT OF TRANSPORTATION - RALEIGH, N.C., DATED JANUARY 2012 ARE APPLICABLE TO THIS PROJECT AND BY REFERENCE HEREBY ARE CONSIDERED A PART OF THESE PLANS:

STD. NO.	TITLE

GENERAL NOTES

. SIGNS FURNISHED BY STATE

. IF REMOVAL OR RELOCATION OF SIGNS ON PRIVATE STREET (NON-STATE MAINTAINED) IS REQUIRED DUE TO CONSTRUCTION, THE CONTRACTOR SHALL INFORM THE ENGINEER. THE WORK WILL BE COMPLETED BY OTHERS.

. ALL EXISTING SIGNS ON "U" CHANNEL POST WITHIN THE PROJECT LIMITS SHALL BE REMOVED AND DISPOSED OF UNLESS OTHERWISE NOTED ON PLANS.

. WHEN EXISTING SIGNS ARE REMOVED AND INSTALLED ON NEW SUPPORTS, THE RE-ERECTION SHALL IMMEDIATELY FOLLOW THE REMOVAL.

. SEE ROADWAY PLANS FOR GUARD/GUIDE RAIL DETAILS.

NOTES

1) DISPOSAL OF SIGN SYSTEM, U CHANNEL

INDEX

SHEET NO.	DESCRIPTION
SIGN-1	TITLE SHEET
SIGN-2	SIGN DETAIL SHEET

PLAN PREPARED BY: N.C.D.O.T. SIGNING AND DELINEATION UNIT

AYMAN ALQUDWAH, PE, CPM, SIGNING & DELINEATION REGIONAL ENGINEER

BASIR A. RASHID SIGNING & DELINEATION PROJECT DESIGN ENGINEER

STATE OF NORTH CAROLINA · DEPARTMENT OF TRANSPORTATION

12-MAR-2014 08:22
P:\TIPProjects\B5117\Traffic\Signing\CADD\Signing Layout Plans\B-5117_Sgn_SIGN-SHEET-1.dgn
brashid AT TE27912

TIP NO.	SHEET NO.
B-5117	SIGN-2

APPROVED: Ayman Alquadah

DATE: 4-8-14

SEAL

NORTH CAROLINA PROFESSIONAL SEAL 028387 ENGINEER AYMAN I. ALQUDAH

BEGIN STATE SIGNING PROJECT B-5117
-L- STA 16+00.00

END STATE SIGNING PROJECT B-5117
-L- STA 36+50.00

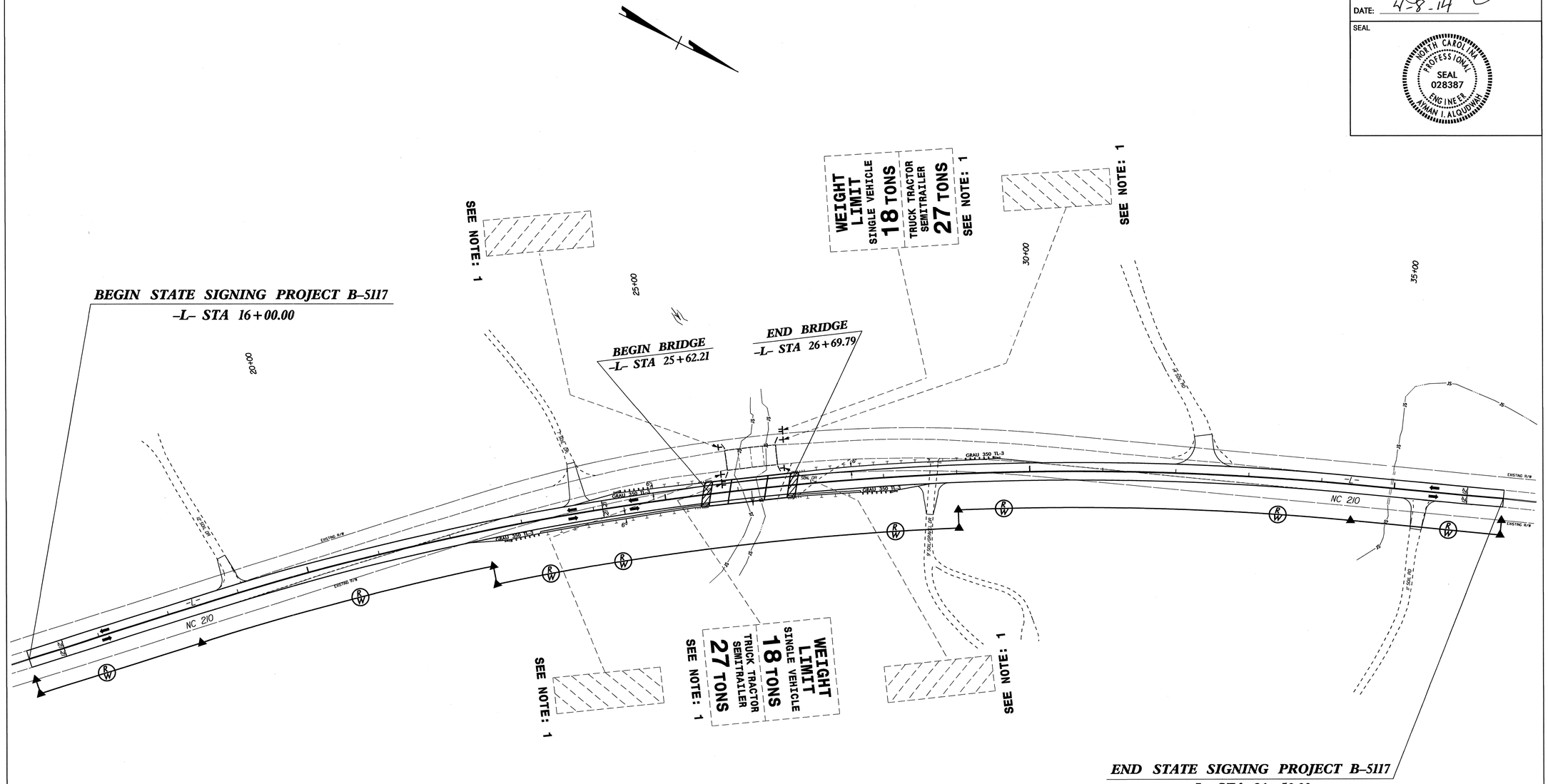

EXISTING AND PROPOSED SIGNS
STA. 16+00.00 TO STA. 36+50.00 -L-
NC 210

12-MAR-2014 10:35
P:\TIPProjects-B\B5117\Traffic\Signing\CADD\Signing Layout Plans\B-5117_Sgn_SIGN-SHEET-2.dgn
brashid AT TE27912

09/08/99

TIP PROJECT: B-5117

STATE OF NORTH CAROLINA
DIVISION OF HIGHWAYS

T.I.P. NO.	SHEET NO.
B-5117	UO-1

UTILITIES BY OTHERS PLANS
BLADEN COUNTY

LOCATION: BRIDGE NO. 47 ON NC 210 OVER LAKE CREEK

TYPE OF WORK: UTILITIES BY OTHERS RELOCATION

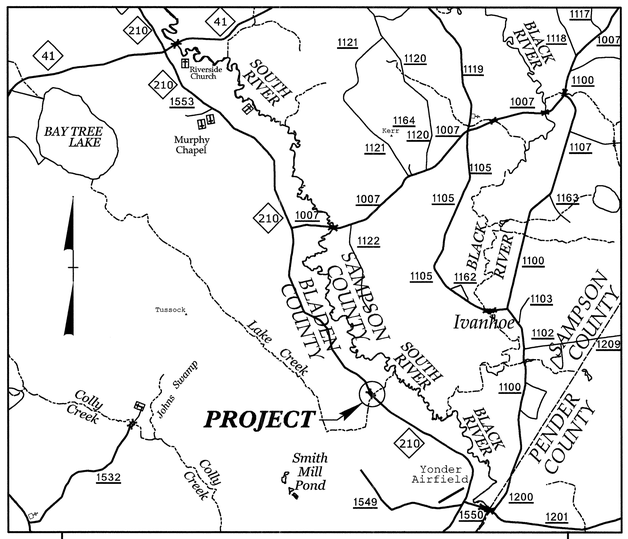

VICINITY MAP

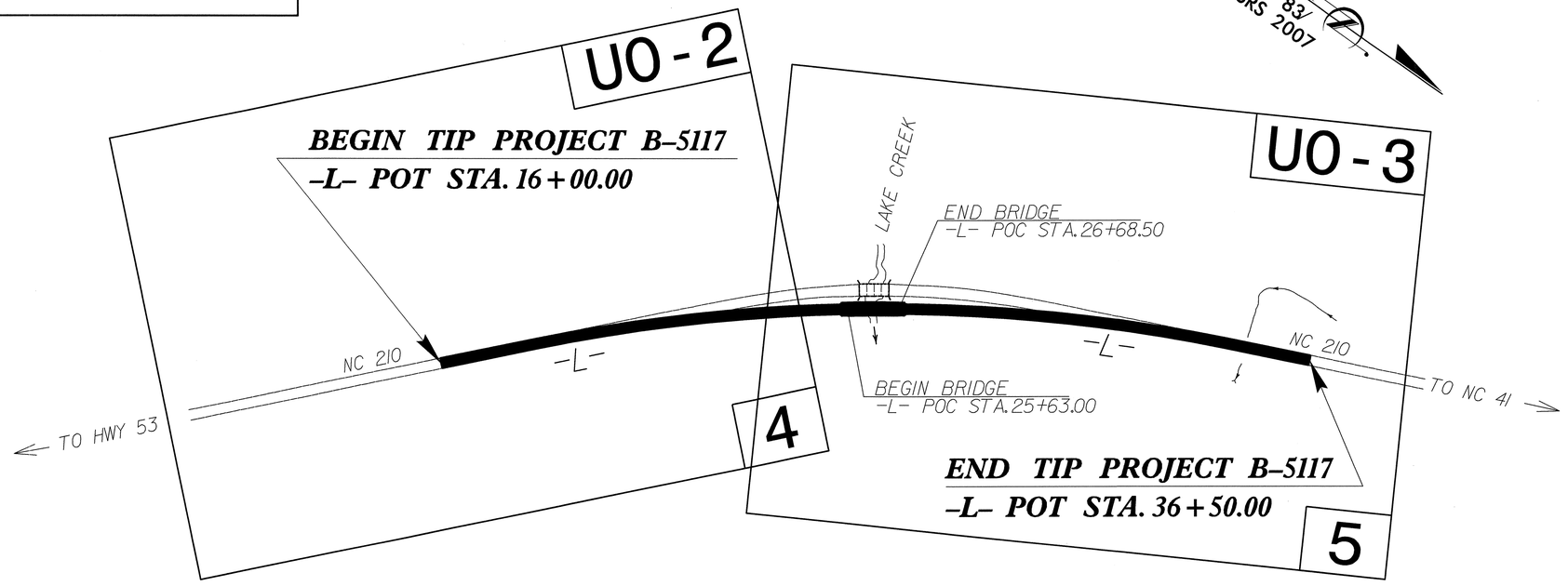

GRAPHIC SCALES

50 25 0 50 100
PLANS

50 25 0 50 100
PROFILE (HORIZONTAL)

10 5 0 10 20
PROFILE (VERTICAL)

INDEX OF SHEETS

SHEET NO.	DESCRIPTION
UO-1	TITLE SHEET
UO-2	PLAN SHEET
UO-3	PLAN SHEET

UTILITY OWNERS ON PROJECT

(1) POWER - FOUR COUNTY EMC

(2) TELEPHONE - STAR TELEPHONE

UTILITY DESIGN BY:
MA Engineering CONSULTANTS, INC.
598 East Chatham Street Suite 137 Cary, NC 27511
Phone: 919 297 0220 Fax: 919 297 0221

PREPARED IN THE OFFICE OF:
DIVISION OF HIGHWAYS
UTILITIES UNIT
UTILITIES ENGINEERING
1555 MAIL SERVICES CENTER
RALEIGH NC 27699-1555
PHONE (919) 707-6690
FAX (919) 250-4151

Roger Worthington, P.E. UTILITIES SECTION ENGINEER
Corey Bousquet, P.E. UTILITIES SQUAD LEADER PROJECT ENGINEER
Kifah Kamil UTILITIES PROJECT DESIGNER

$$$$$$SYSTIME$$$$$$
$$$$$$USERNAME$$$$$$
$$$$$$DGN$$$$$$

PROJECT REFERENCE NO.	SHEET NO.
B-5117	UO-2

UTILITIES BY OTHERS

NOTE:
ALL PROPOSED UTILITY WORK SHOWN ON THIS SHEET WILL BE DONE BY OTHERS

MA Engineering CONSULTANTS, INC.
598 East Chatham Street Suite 137 Cary, NC 27511
Phone: 919.297.0220 Fax: 919.297.0221

$$$$$SYSTIME$$$$
$$$$$$$$$$$$$$$$$$$$$DGN$$$$$$$$$$$$$$$$$
$$$USERNAME$$$$

PROJECT REFERENCE NO.	SHEET NO.
B-5117	U0-3

UTILITIES BY OTHERS

NOTE:
ALL PROPOSED UTILITY WORK SHOWN ON THIS SHEET WILL BE DONE BY OTHERS

MA Engineering CONSULTANTS, INC.
598 East Chatham Street Suite 137 Cary, NC 27511
Phone: 919.297.0220 Fax: 919.297.0221

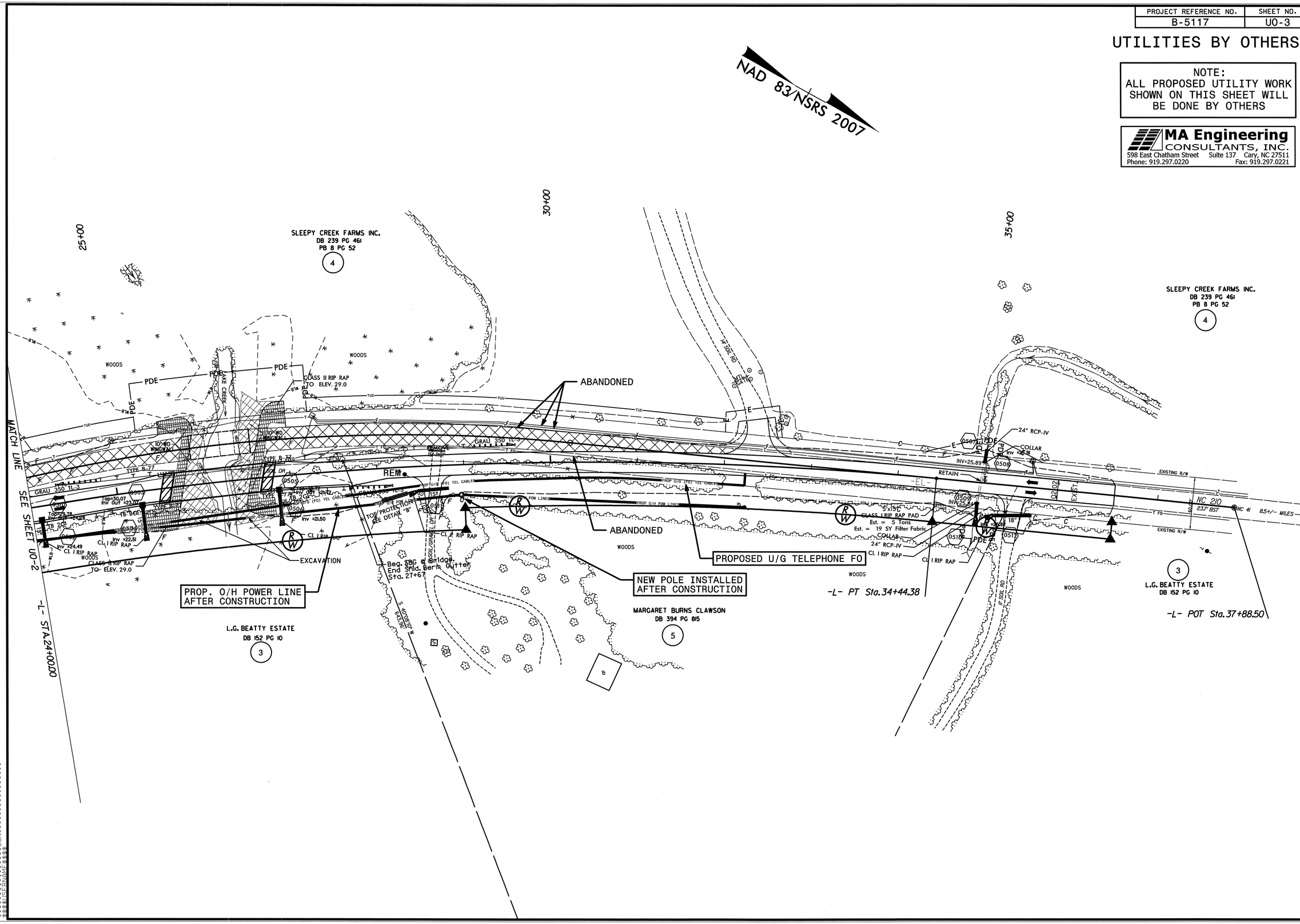

CSD265813,5/20/2014,S:\Records\Plot_Rooms\Plotter_room_A\Print_Jobs\05-20-14\Rochester\b5117 Earthwo k XSC Volume Summary xls

Quantities are approximate only. The Resident Engineer will recross-section the work accurately when the project is staked out. These cross-section notes will be used in computing the final quantities for which the contractor will be paid.

NOTE: EMBANKMENT COLUMN INCLUDES BACKFILL FOR UNDERCUT

STATE OF NORTH CAROLINA
DIVISION OF HIGHWAYS

CROSS-SECTION SUMMARY

PROJ. REFERENCE NO.	SHEET NO.
B-5117	X-1A

Station L	Uncl. Exc. (cu. yd.)	Embt (cu. yd.)
16+00.00	0	0
16+50.00	18	0
17+00.00	36	2
17+50.00	36	8
18+00.00	34	21
18+50.00	29	32
19+00.00	30	29
19+50.00	39	20
20+00.00	40	14
20+50.00	49	8
21+00.00	75	10
21+50.00	111	12
22+00.00	142	9
22+50.00	144	11
23+00.00	79	31
23+50.00	10	165
24+00.00	0	359
24+50.00	0	488
25+00.00	0	598
25+50.00	0	735
25+62.21	0	199

Station L	Uncl. Exc. (cu. yd.)	Embt (cu. yd.)	Undercut Exc. (cu. yd.)
26+69.79	0	0	0
27+00.00	0	494	0
27+50.00	0	846	0
28+00.00	0	787	0
28+10.00	0	135	0
28+50.00	0	406	21
29+00.00	22	342	74
29+50.00	79	280	119
30+00.00	121	232	117
30+50.00	130	165	102
31+00.00	128	89	60
31+50.00	113	51	32
32+00.00	96	43	29
32+50.00	77	39	26
32+90.00	53	22	20
33+00.00	14	3	0
33+50.00	72	16	0
34+00.00	63	19	0
34+50.00	30	21	0
35+00.00	6	198	0
35+50.00	11	189	0
36+00.00	21	3	0
36+50.00	11	1	0

8/23/99

0 2.5 5	PROJ. REFERENCE NO.	SHEET NO.
	B-5117	X-1

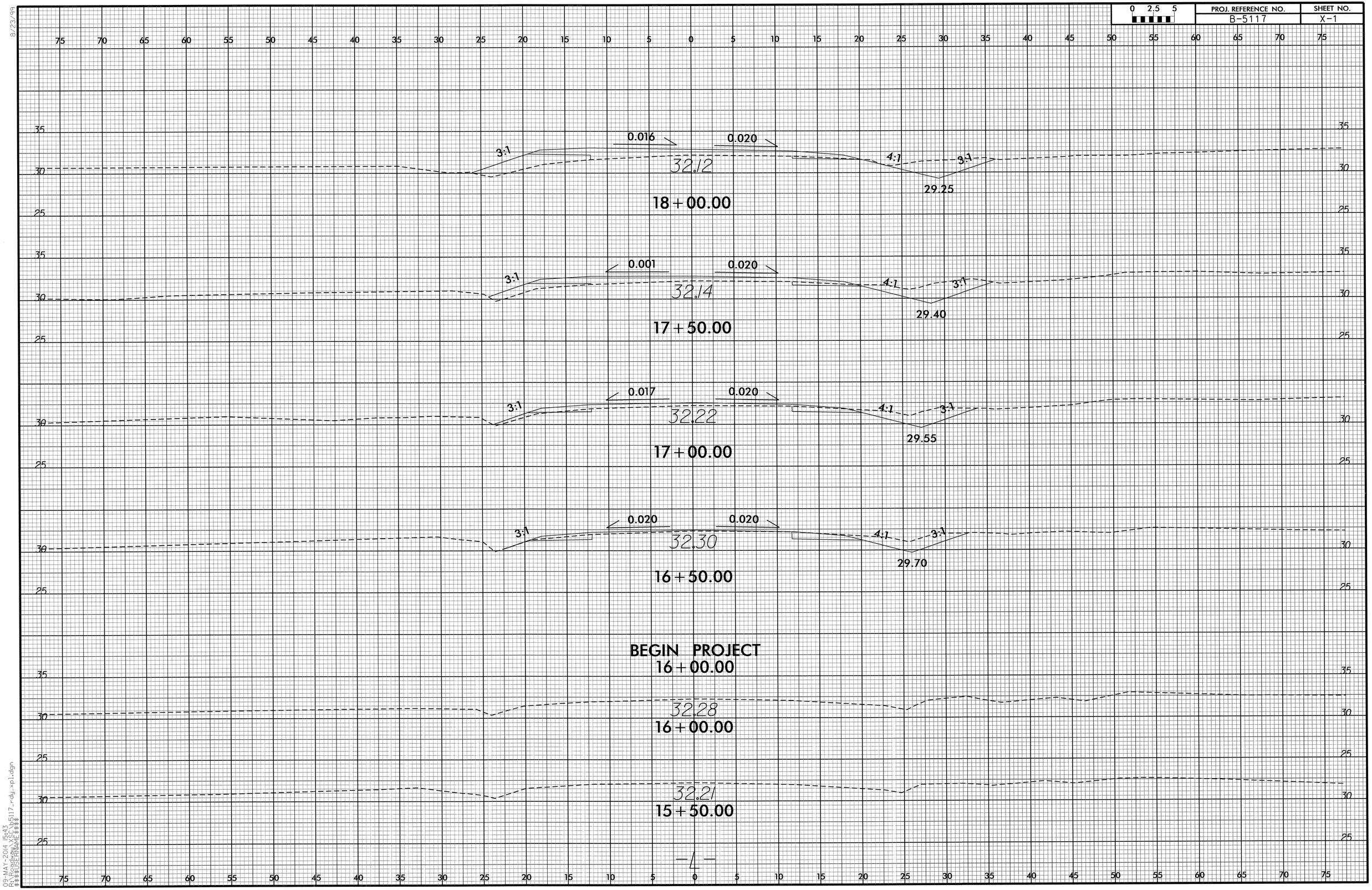

09-MAY-2014 15:43
R:\Roadway\xsec\b5117_rdy_xpl.dgn
$$$$USERNAME$$$$

8/23/99

0 2.5 5	PROJ. REFERENCE NO.	SHEET NO.
	B-5117	X-2

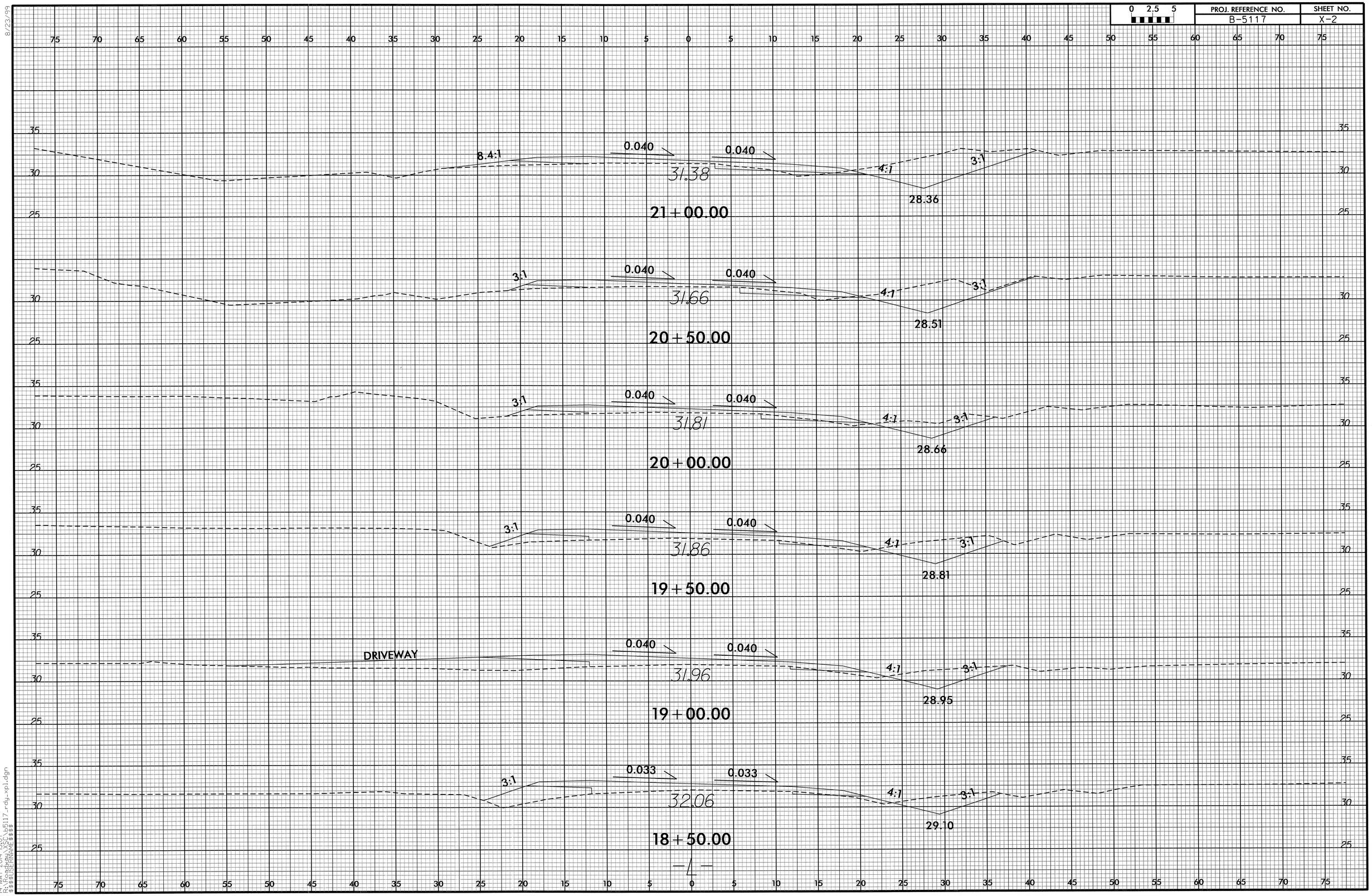

14-MAY-2014 15:07
R:\Roadway\x5c\b5117_rdy_xp1.dgn
$$$$USERNAME$$$$

8/23/99

0 2.5 5	PROJ. REFERENCE NO.	SHEET NO.
	B-5117	X-3

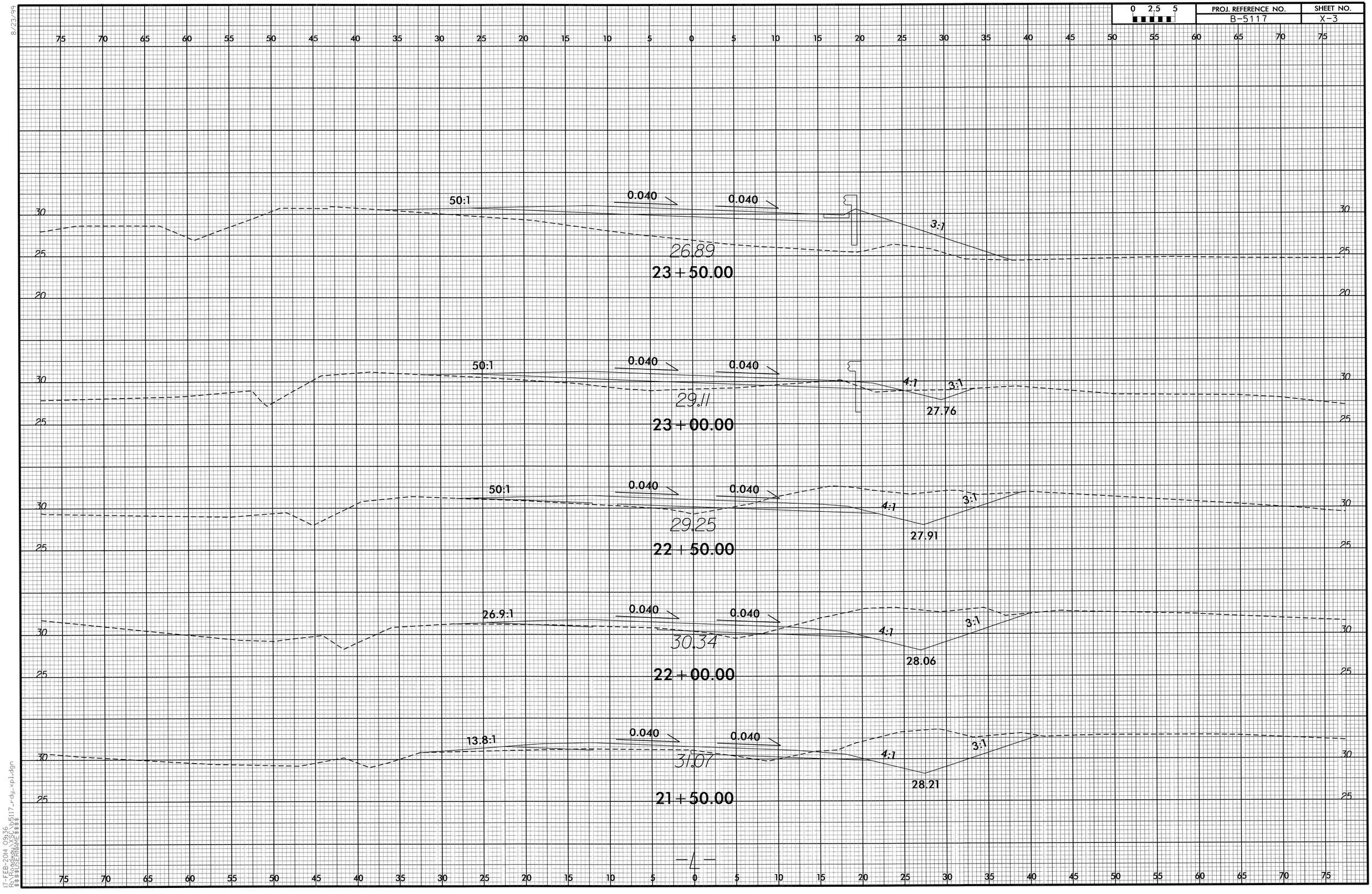

17-FEB-2014 09:36
C:\Projects\B-5117_rdy_xpl.dgn
$$$$USERNAME$$$$

8/23/99

0 2.5 5	PROJ. REFERENCE NO.	SHEET NO.
	B-5117	X-4

BEGIN BRIDGE
25+62.21

14.8:1 | 0.040 | 0.040 | 3:1

24.19

25+50.00

21.8:1 | 0.040 | 0.040 | 3:1

24.92

25+00.00

21.4:1 | 0.040 | 0.040 | 3:1

24.55

24+50.00

39.6:1 | 0.040 | 0.040 | 3:1

25.19

24+00.00

-4-

17-FEB-2014 09:36
R:\Roadway_XSC\b5117_rdy_xpl.dgn
$$$$USERNAME$$$$

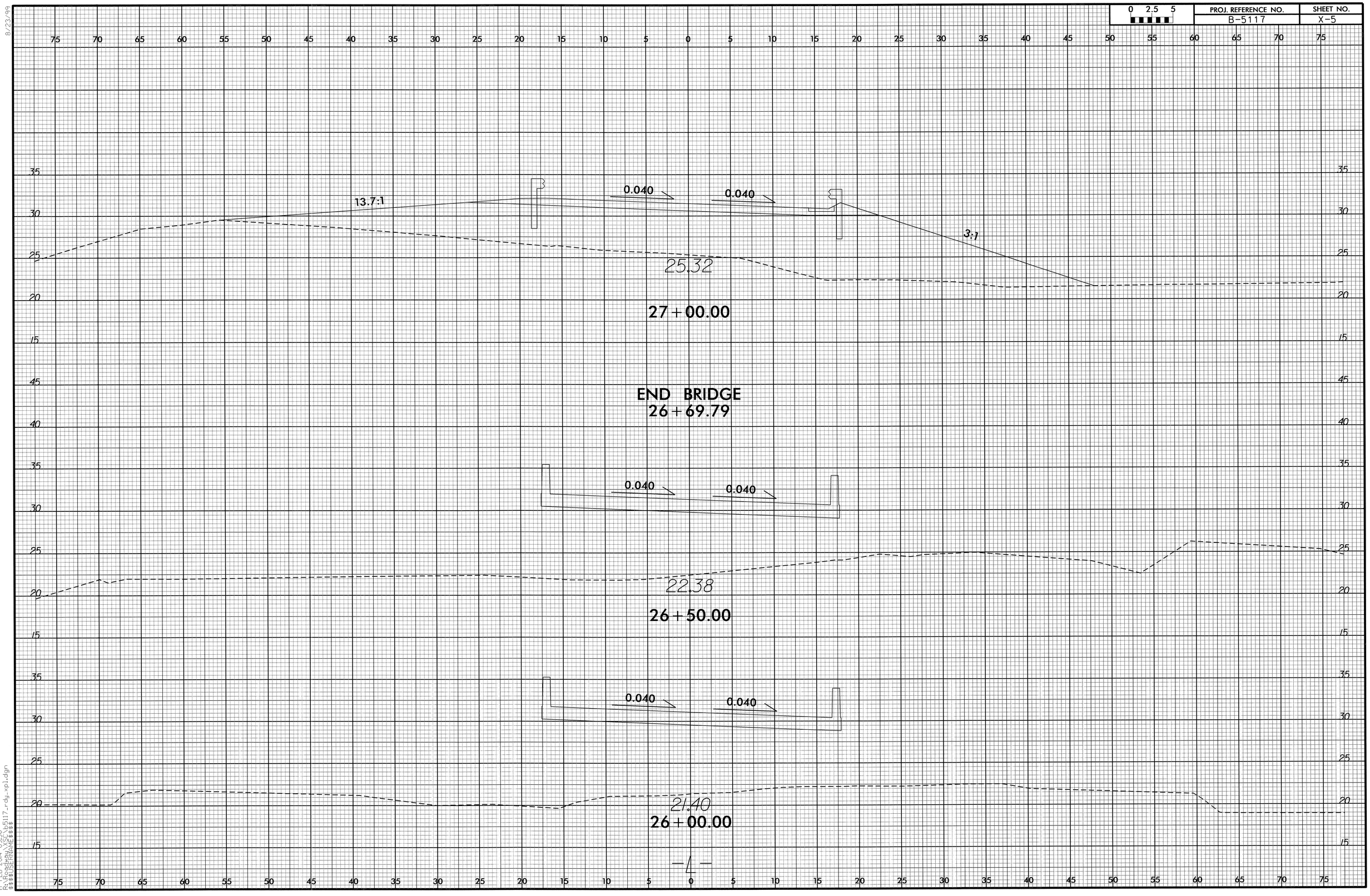

8/23/99

17-FEB-2014 09:36
R:\Roadway\XSC\b5117_rdy_xpl.dgn
$$$$USERNAME$$$$

0 2.5 5

PROJ. REFERENCE NO.	SHEET NO.
B-5117	X-6

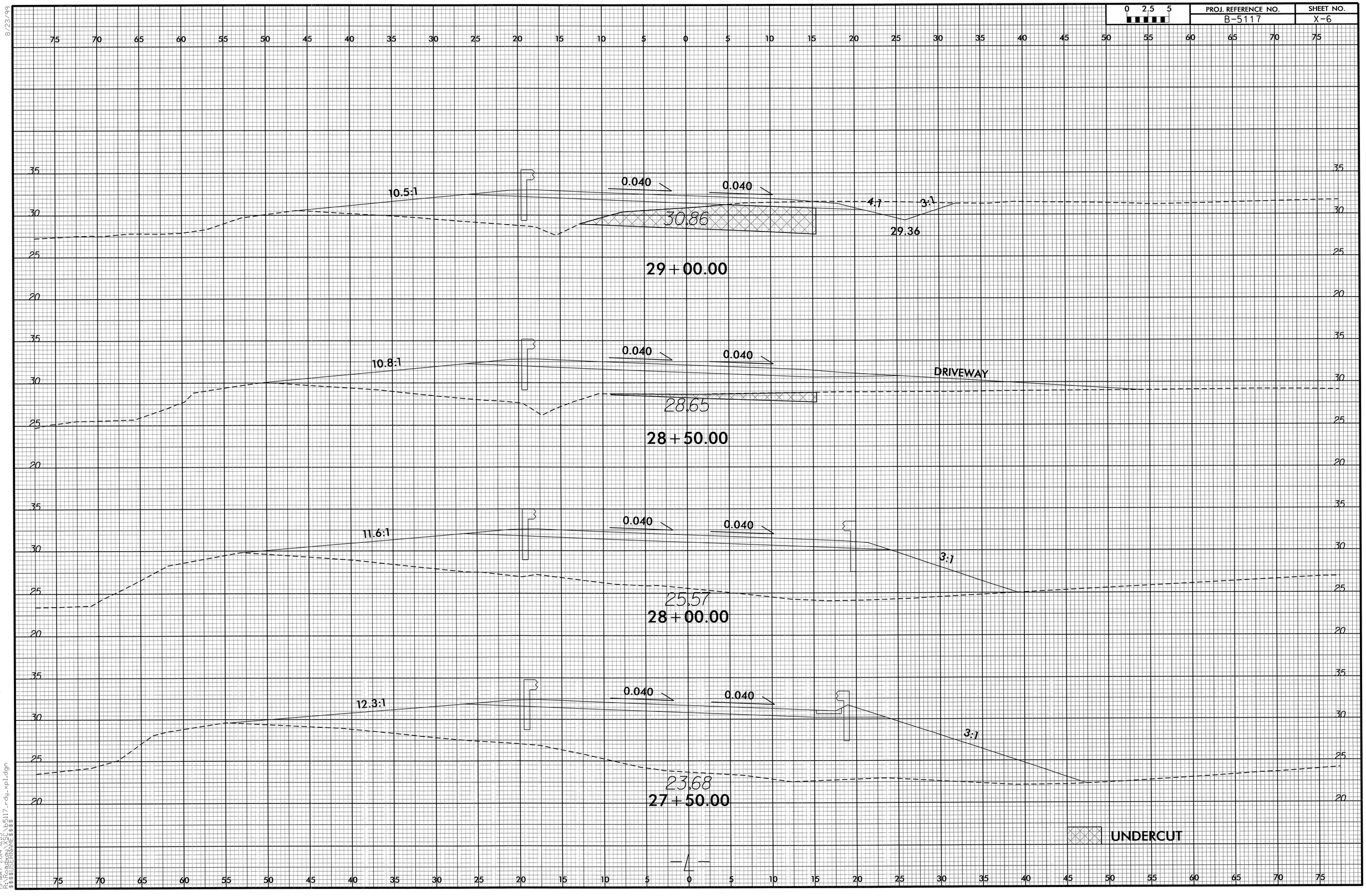

19-MAY-2014 12:19
C:\projects\b5117_rdy_xpl.dgn
$$$$USERNAME$$$$

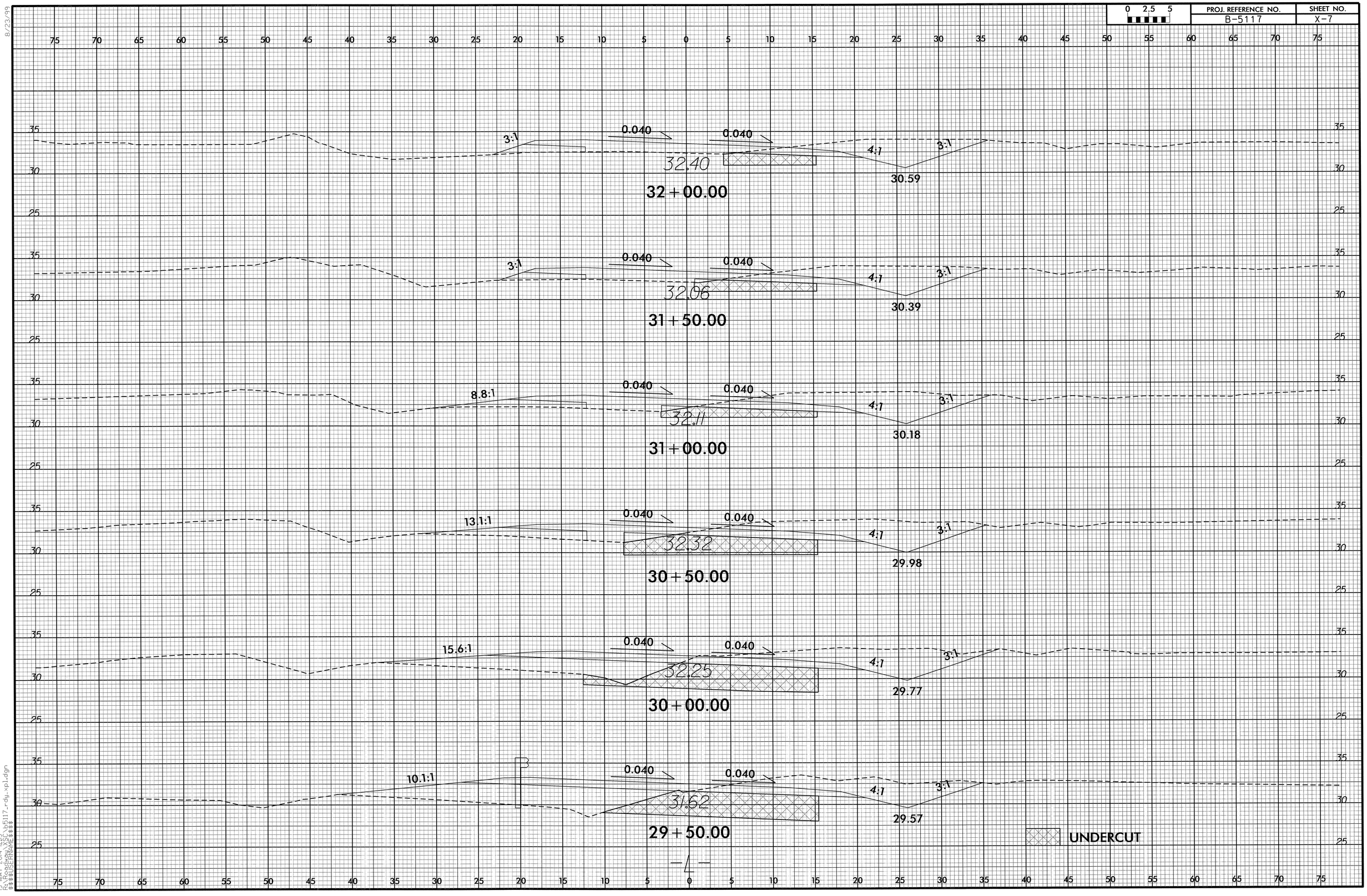

8/23/99

19-MAY-2014 12:19
R:\Roadway\XSC\b5117_rdy_xpl.dgn
$$$$USERNAME$$$$

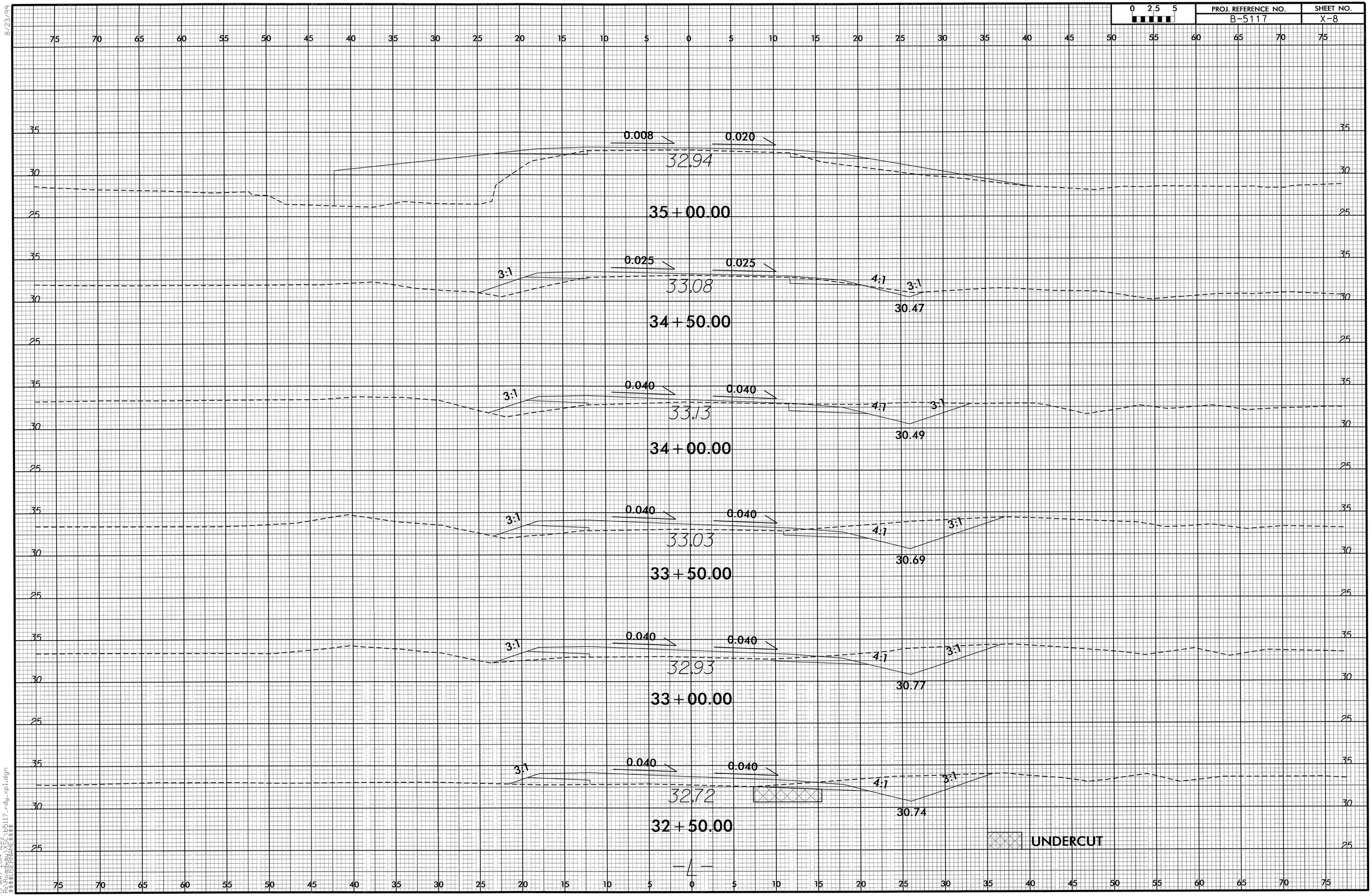

8/23/99

19-MAY-2014 12:19
R:\Roadway\XSC\b5117_rdy_xpl.dgn
$$$$USERNAME$$$$

8/23/99

0 2.5 5	PROJ. REFERENCE NO.	SHEET NO.
	B-5117	X-9

33.67

37+00.00

END PROJECT
36+50.00

33.57

36+50.00

0.020 0.020

3:1 4:1 3:1

33.30

30.71

36+00.00

0.009 0.020

3:1 4:1 3:1

33.10

30.52

35+50.00

—4—

17-FEB-2014 09:36
R:\Roadway\Sht\b5117_rdy_xpl.dgn
$$$$USERNAME$$$$