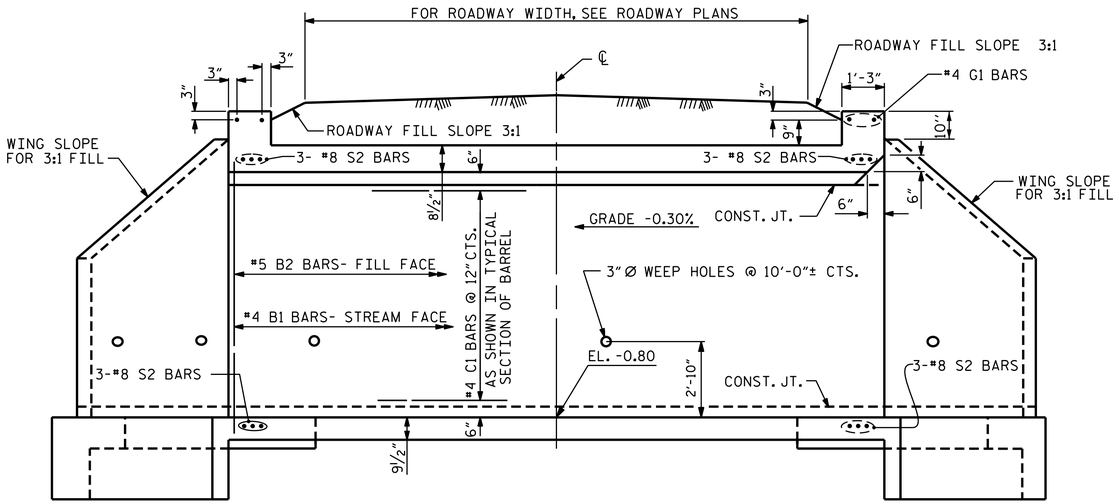

CULVERT SECTION NORMAL TO ROADWAY

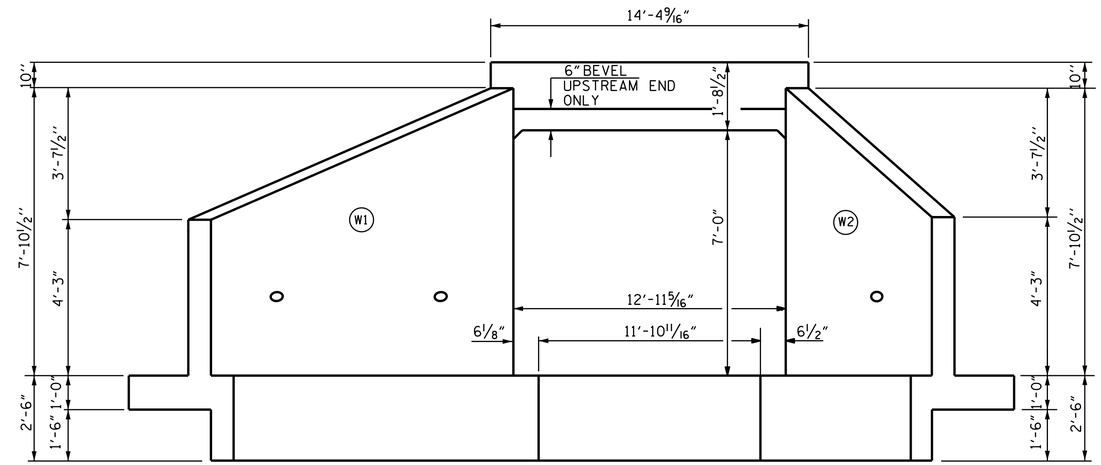

INLET END ELEVATION NORMAL TO SKEW

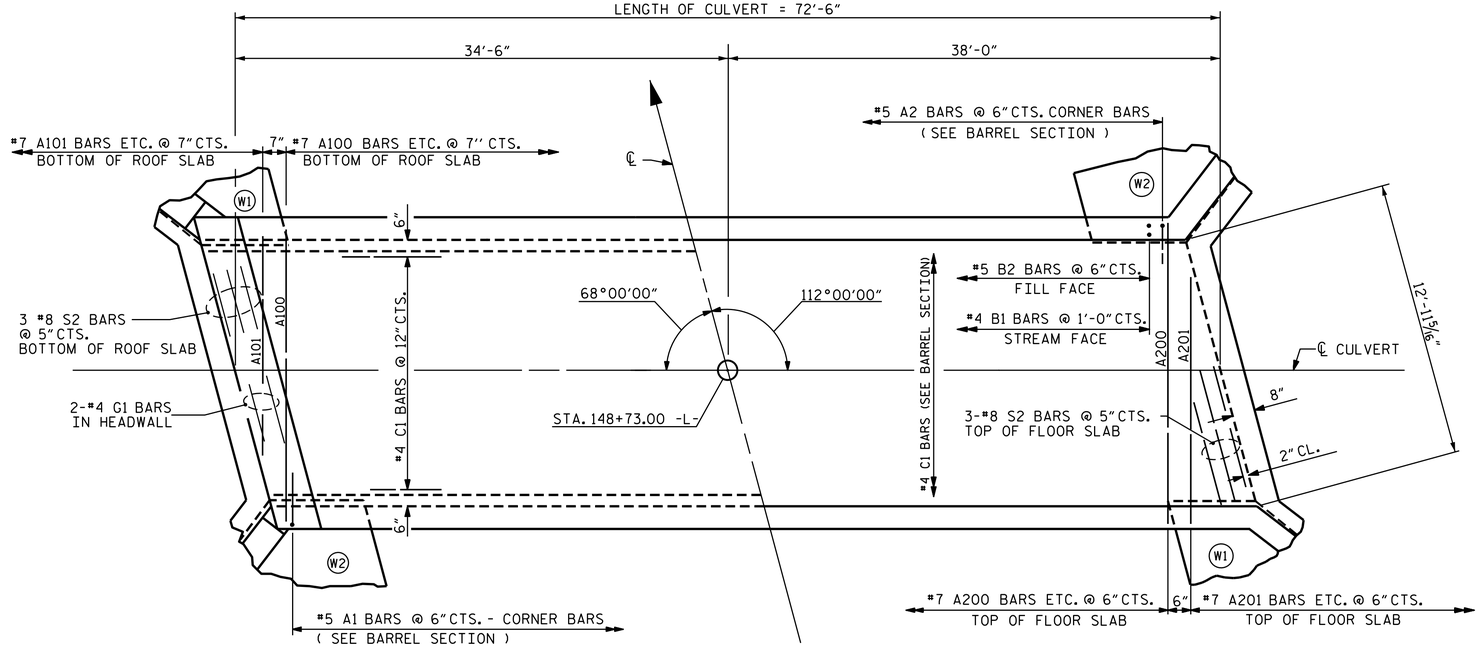

PART PLAN - ROOF SLAB

PART PLAN - FLOOR SLAB

REVISED 8-28-92 BY E.L.R. CHECKED BY G.R.P.
REVISED 8-22-89 BY A.R.B. CHECKED BY C.R.K.
REDRAWN 8-22-89

REVISED 11-19-99 BY M.M. CHECKED BY R.W.W.

ASSEMBLED BY : N. D'Aiuto	DATE : 2/13/13	SPECIAL	
CHECKED BY : M.AHMED	DATE : 3/12/13		
DRAWN BY : R.W. WRIGHT	DATE : AUG. 1989	STANDARD	
CHECKED BY : A.R. BISSETTE	DATE : AUG. 1989		

01-MAY-2014 09:16
R:\Structures\Plans\Final Plans\R3620_SD_CD.dgn
emurray

5/1/2014

NORTH CAROLINA PROFESSIONAL SEAL 025516 ENGINEER EMILY E. MURRAY

DocuSigned by: Emily Murray
CAEB97AEDC5B4E0...

PROJECT NO. R-3620
WASHINGTON COUNTY
STATION: 148+73.00 -L-

SHEET 2 OF 5

STATE OF NORTH CAROLINA
DEPARTMENT OF TRANSPORTATION
RALEIGH

BARREL STANDARD SINGLE 12 FT. X 7 FT. CONCRETE BOX CULVERT 112° SKEW

REVISIONS						SHEET NO.
NO.	BY:	DATE:	NO.	BY:	DATE:	C-2
1			3			TOTAL SHEETS
2			4			5

STR. #1 STD. NO. CB221