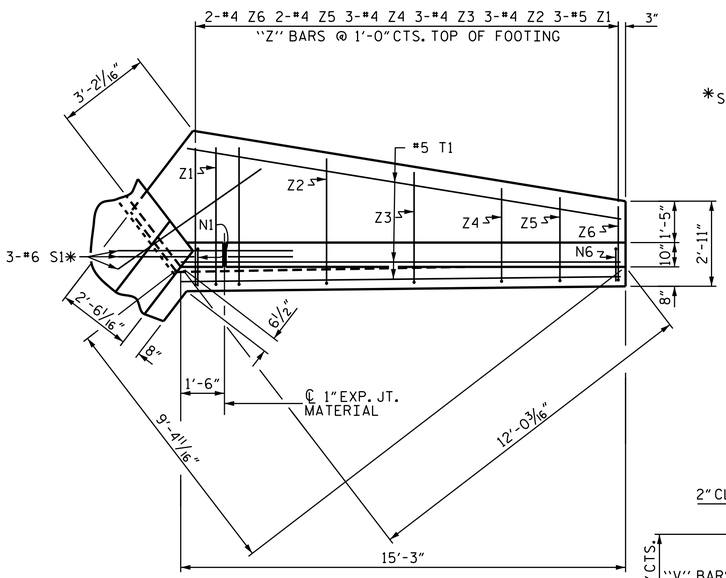

PLAN W2

*S1 @ BOTTOM OF FLOOR SLAB & FOOTING

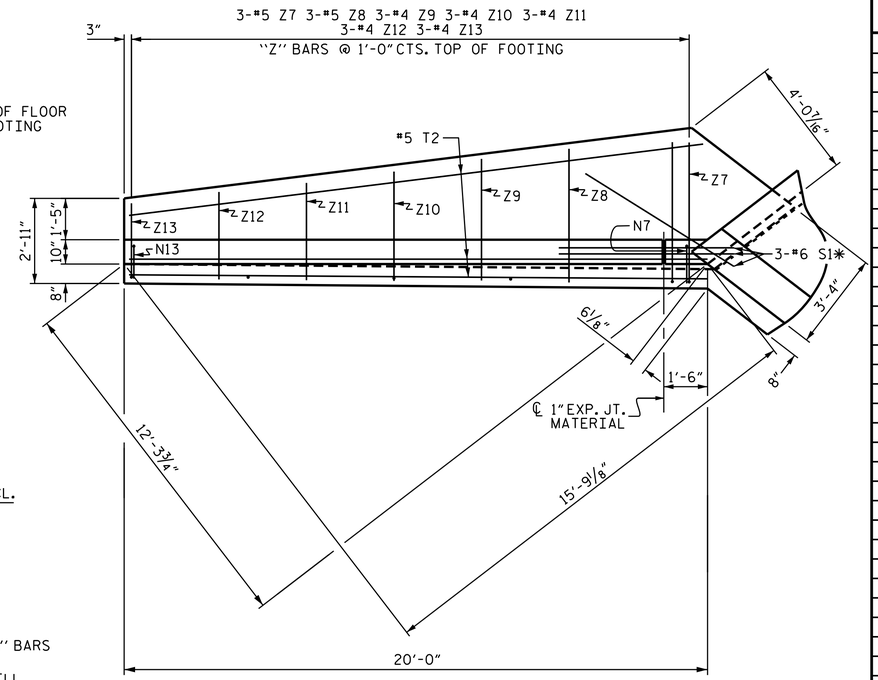

PLAN W1

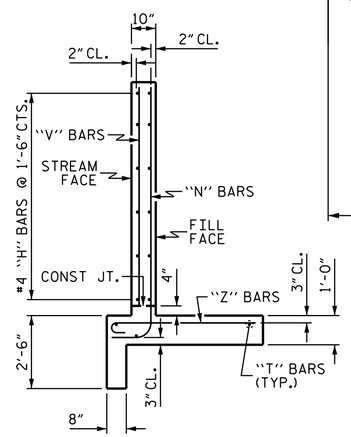

TYPICAL WING SECTION

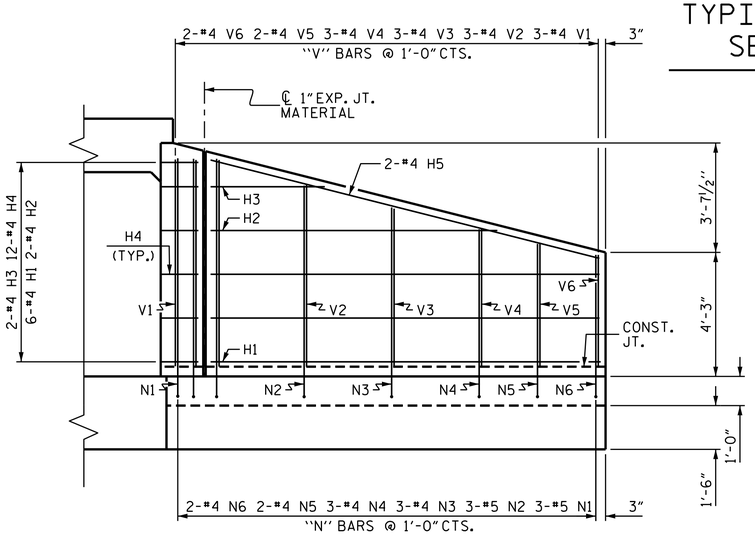

ELEVATION W2

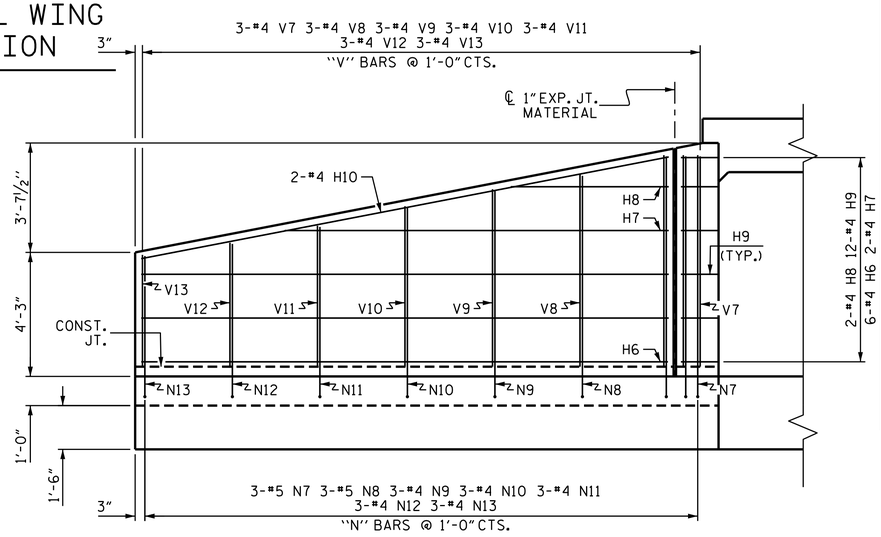

ELEVATION W2

BILL OF MATERIAL

BAR	NO.	SIZE	TYPE	LENGTH	WEIGHT
H1	12	4	STR	13'-4"	107
H2	4	4	STR	9'-10"	26
H3	4	4	STR	3'-11"	10
H4	24	4	1	3'-3"	52
H5	4	4	STR	13'-9"	37
H6	12	4	STR	18'-1"	145
H7	4	4	STR	13'-2"	35
H8	4	4	STR	5'-5"	14
H9	24	4	2	3'-3"	52
H10	4	4	STR	18'-5"	49
N1	6	5	3	9'-2"	57
N2	6	5	3	8'-3"	52
N3	6	4	3	7'-6"	30
N4	6	4	3	6'-9"	27
N5	4	4	3	6'-3"	17
N6	4	4	3	5'-10"	16
N7	6	5	3	9'-3"	58
N8	6	5	3	8'-7"	54
N9	6	4	3	8'-1"	32
N10	6	4	3	7'-6"	30
N11	6	4	3	6'-10"	27
N12	6	4	3	6'-3"	25
N13	6	4	3	5'-10"	23
S1	12	6	STR	6'-0"	108
T1	6	5	STR	15'-1"	94
T2	6	5	STR	19'-10"	124
V1	6	4	STR	7'-1"	28
V2	6	4	STR	6'-3"	25
V3	6	4	STR	5'-5"	22
V4	6	4	STR	4'-9"	19
V5	4	4	STR	4'-3"	11
V6	4	4	STR	3'-10"	10
V7	6	4	STR	7'-3"	29
V8	6	4	STR	6'-7"	26
V9	6	4	STR	6'-1"	24
V10	6	4	STR	5'-6"	22
V11	6	4	STR	4'-10"	19
V12	6	4	STR	4'-3"	17
V13	6	4	STR	3'-10"	15
Z1	6	5	4	5'-4"	33
Z2	6	4	4	4'-10"	19
Z3	6	4	4	4'-4"	17
Z4	6	4	4	3'-9"	15
Z5	4	4	4	3'-5"	9
Z6	4	4	4	3'-1"	8
Z7	6	5	4	5'-5"	34
Z8	6	5	4	5'-2"	32
Z9	6	4	4	4'-8"	19
Z10	6	4	4	4'-3"	17
Z11	6	4	4	3'-10"	15
Z12	6	4	4	3'-6"	14
Z13	6	4	4	3'-1"	12

REINFORCING STEEL LBS. FOR 4 WINGS	1812
CLASS A CONCRETE	
4 WINGS	28.0 CY
2 HEADWALL	1.4 CY
2 END CURTAIN WALL	1.5 CY
TOTAL	30.9 CY

BAR TYPES

ALL BAR DIMENSIONS ARE OUT TO OUT.

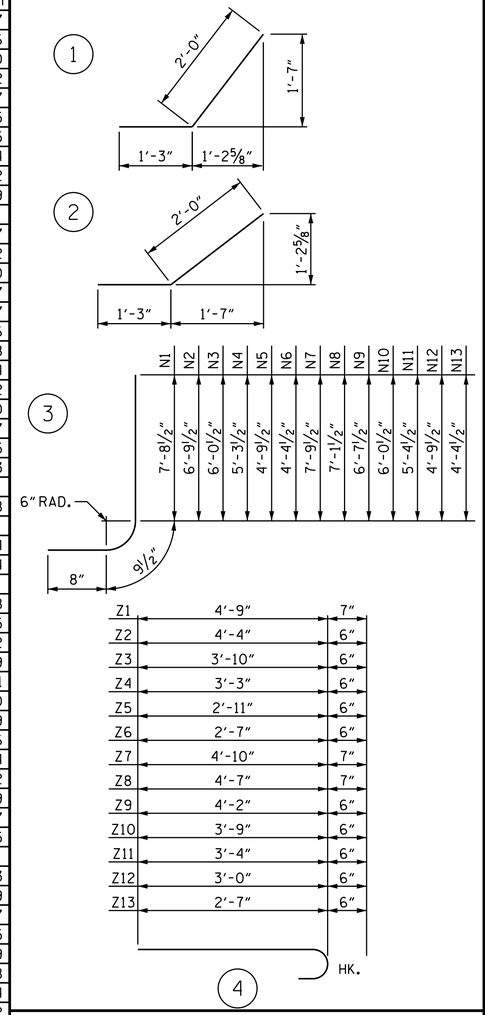

PROJECT NO. R-3620

WASHINGTON COUNTY

STATION: 148+73.00 -L-

SHEET 4 OF 5

STATE OF NORTH CAROLINA
DEPARTMENT OF TRANSPORTATION
RALEIGH

WINGS FOR CONCRETE BOX CULVERT

H = 7'-0" SLOPE = 3:1

SKEW = 112°

5/1/2014

NORTH CAROLINA PROFESSIONAL SEAL 025516 ENGINEER EMILY E. MURRAY

DocuSigned by: Emily Murray CAEB97AEDC5B4E0...

REVISIONS						SHEET NO.
NO.	BY:	DATE:	NO.	BY:	DATE:	C-4
1			3			TOTAL SHEETS
2			4			5

STR. #1

DRAWN BY : N.D'Aiuto DATE : 2/27/13
CHECKED BY : M.AHMED DATE : 3/12/13

01-MAY-2014 09:16
R:\Structures\Plans\Final Plans\R3620_SD_CD.dgn
emurray