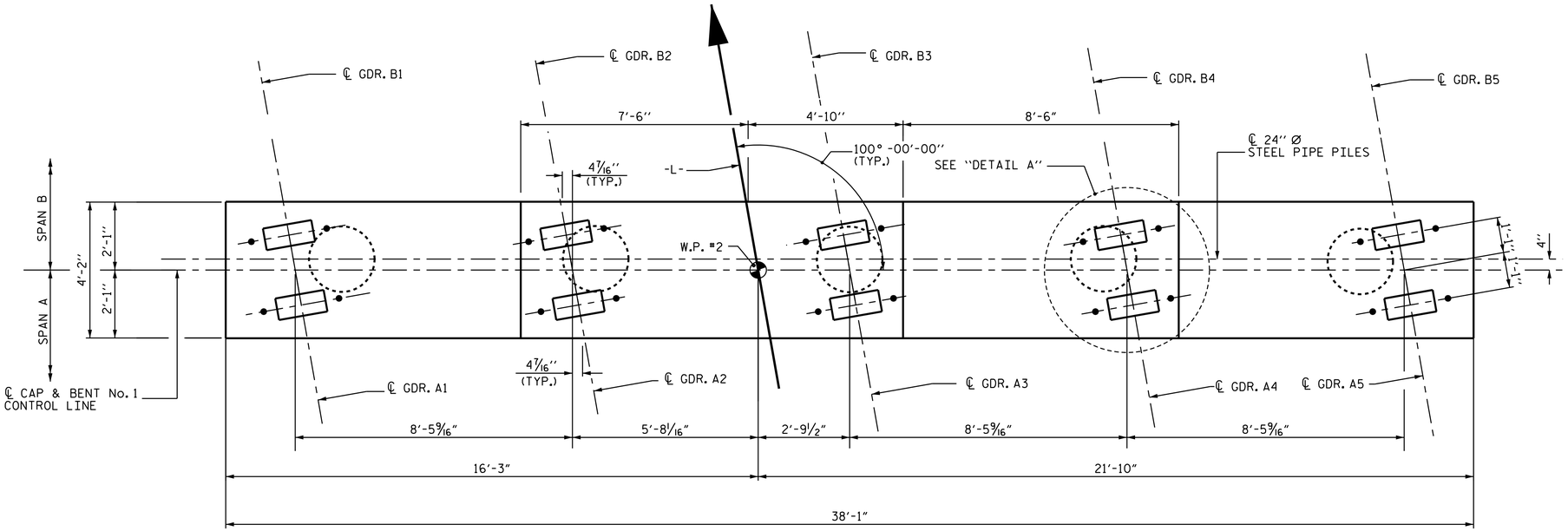


## PLAN

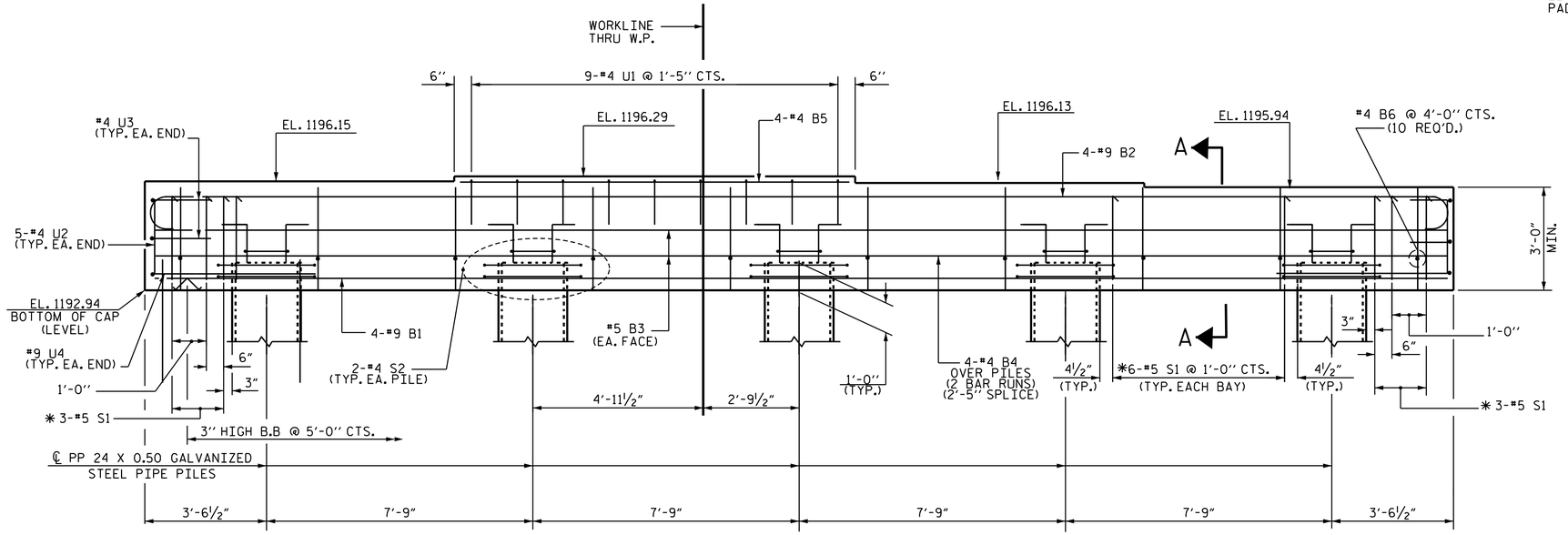


* INVERT ALTERNATE STIRRUPS

## ELEVATION

FOR STEEL PIPE PILE REINFORCING STEEL & CONCRETE QUANTITIES, SEE "24" STEEL PIPE PILE" STANDARD
FOR SECTION A-A, SEE SHEET 2 OF 2.

## NOTES

STIRRUPS IN CAP MAY BE SHIFTED AS NECESSARY TO CLEAR ANCHOR BOLTS.

"U" BARS IN END OF CAP MAY BE SHIFTED SLIGHTLY AS NECESSARY TO CLEAR "B" BARS.

FOR PIPE PILE SPLICE DETAILS, SEE "24 STEEL PIPE PILE" SHEET.

GALVANIZE THE TOP 40 FEET OF EACH INTERIOR BENT PILE IN ACCORDANCE WITH SECTION 1076 OF THE STANDARD SPECIFICATIONS.

THE CONTRACTOR'S ATTENTION IS CALLED TO THE FACT THAT THE CENTERLINE OF THE 24" Ø STEEL PIPE PILES IS OFFSET 4" FROM THE BENT CONTROL LINE.

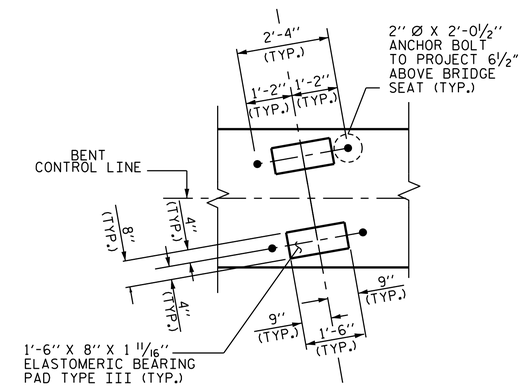


## DETAIL A

PROJECT NO. B-4983

BURKE COUNTY

STATION: 13+52.95 -L-

SHEET 1 OF 2

STATE OF NORTH CAROLINA
DEPARTMENT OF TRANSPORTATION
RALEIGH

SUBSTRUCTURE
BENT No. 1

NORTH CAROLINA PROFESSIONAL SEAL 20125 ENGINEER MARSHALL C. CHEEK, JR.

DocuSigned by: Marshall C. Cheek, Jr.
6549D6EBAA3B405...
4/25/2014

| REVISIONS | | | | | | SHEET NO. |
|---|---|---|---|---|---|---|
| NO. | BY: | DATE: | NO. | BY: | DATE: | S-26 |
| 1 | | | 3 | | | TOTAL SHEETS |
| 2 | | | 4 | | | 36 |

DRAWN BY : M. POOLE 08/12
CHECKED BY : J. R. MCROY DATE : 09/12
DRAWN ENDGINEER OF RECORD : J. R. MCROY DATE : 09/12

$$$$$$SYSTIME$$$$$
$$$$$$$$$$$$$$$$$$$$$$$$DGN$$$$$$$$$$$$$$$$$$$$$$$$
$$$$USERNAME$$$$