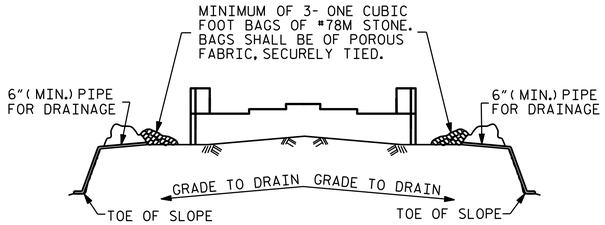


BAGGED STONE AND PIPE SHALL BE PLACED IMMEDIATELY AFTER COMPLETION OF END BENT EXCAVATION. PIPE MAY BE EITHER CONCRETE, CORRUGATED STEEL, CORRUGATED ALUMINUM ALLOY, OR CORRUGATED PLASTIC. PERFORATED PIPE WILL NOT BE ALLOWED.

BAGGED STONE SHALL REMAIN IN PLACE UNTIL THE ENGINEER DIRECTS THAT IT BE REMOVED. THE CONTRACTOR SHALL REMOVE AND DISPOSE OF SILT ACCUMULATIONS AT BAGGED STONE WHEN SO DIRECTED BY THE ENGINEER. BAGS SHALL BE REMOVED AND REPLACED WHENEVER THE ENGINEER DETERMINES THAT THEY HAVE DETERIORATED AND LOST THEIR EFFECTIVENESS.

NO SEPARATE PAYMENT WILL BE MADE FOR THIS WORK AND THE ENTIRE COST OF THIS WORK SHALL BE INCLUDED IN THE UNIT CONTRACT PRICE BID FOR THE SEVERAL PAY ITEMS.

## TEMPORARY DRAINAGE AT END BENT

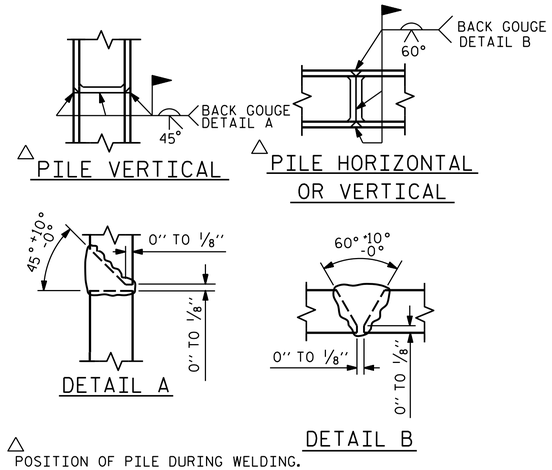


△ POSITION OF PILE DURING WELDING.

## PILE SPLICE DETAILS

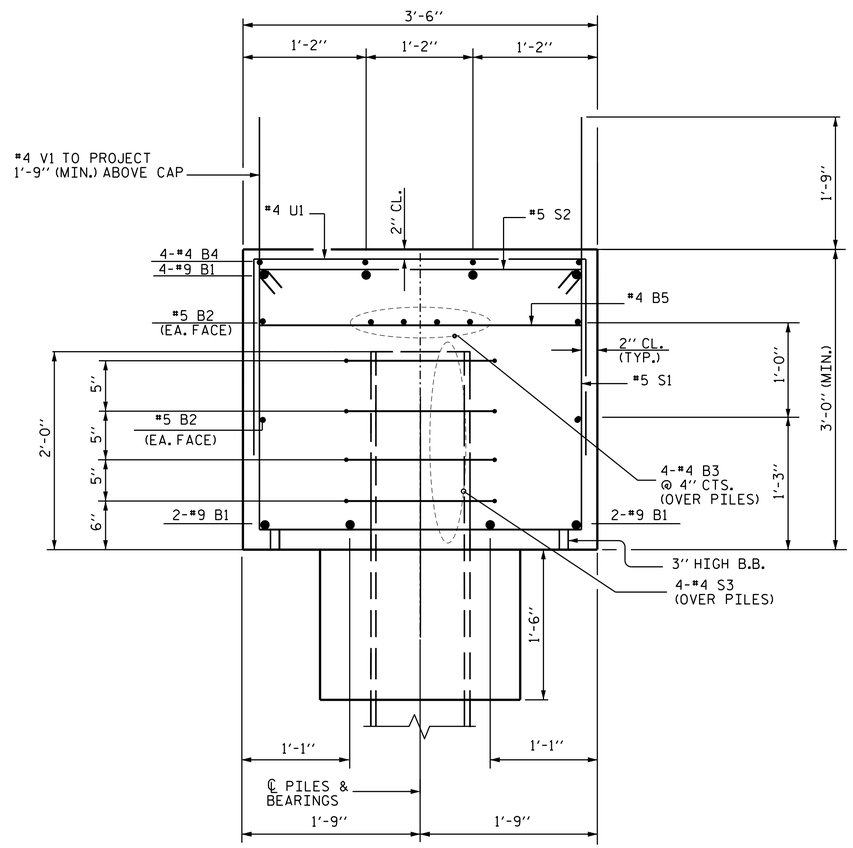


## SECTION A-A

## BAR TYPES

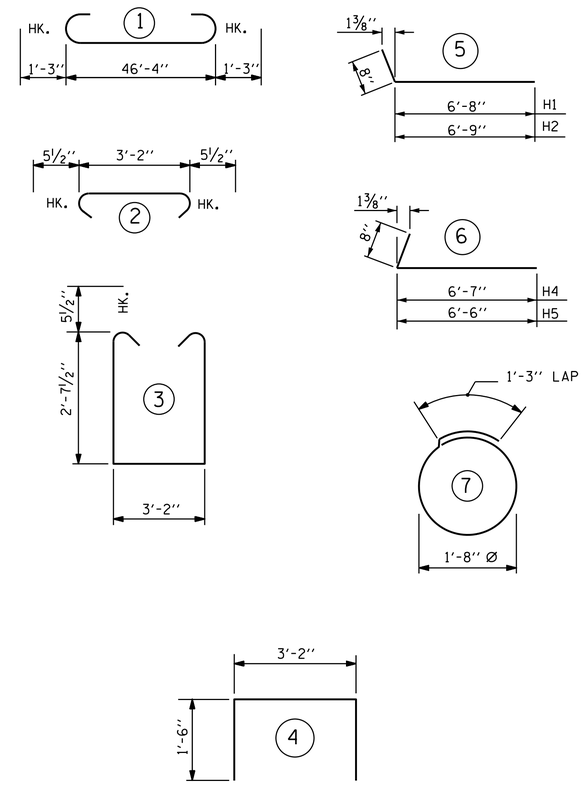


ALL BAR DIMENSIONS ARE OUT TO OUT.

## BILL OF MATERIAL

### END BENT NO. 2

| BAR | NO. | SIZE | TYPE | LENGTH | WEIGHT |
|---|---|---|---|---|---|
| B1 | 8 | 9 | 1 | 48'-10" | 1328 |
| B2 | 4 | 5 | STR | 46'-6" | 194 |
| B3 | 8 | 4 | STR | 24'-6" | 131 |
| B4 | 4 | 4 | STR | 10'-3" | 27 |
| B5 | 11 | 4 | STR | 3'-2" | 23 |
| | | | | | |
| H1 | 10 | 5 | 5 | 7'-4" | 76 |
| H2 | 10 | 5 | 5 | 7'-5" | 77 |
| H3 | 12 | 4 | STR | 3'-2" | 25 |
| H4 | 10 | 5 | 6 | 7'-3" | 76 |
| H5 | 10 | 5 | 6 | 7'-2" | 75 |
| H6 | 12 | 4 | STR | 3'-10" | 31 |
| | | | | | |
| S1 | 42 | 5 | 3 | 9'-4" | 409 |
| S2 | 42 | 5 | 2 | 4'-1" | 179 |
| S3 | 24 | 4 | 7 | 6'-6" | 104 |
| | | | | | |
| U1 | 7 | 4 | 4 | 6'-2" | 29 |
| | | | | | |
| V1 | 60 | 4 | STR | 4'-3" | 170 |
| V2 | 22 | 5 | STR | 7'-8" | 176 |
| V3 | 24 | 5 | STR | 8'-0" | 200 |
| REINFORCING STEEL | | | | | 3330 LBS |

CLASS A CONCRETE

POUR #1 : CAP, BOTTOM PORTION OF WINGS & COLLARS 21.4 C.Y.

POUR #2 : TOP PORTION OF WINGS 3.9 C.Y.

TOTAL 25.3 C.Y.

HP 12 X 53 STEEL PILES
NO. 6 480 LIN. FT.

PROJECT NO. B-4983
BURKE COUNTY
STATION: 13+52.95 -L-

SHEET 3 OF 3

STATE OF NORTH CAROLINA
DEPARTMENT OF TRANSPORTATION
RALEIGH

SUBSTRUCTURE
END BENT No. 2

NORTH CAROLINA PROFESSIONAL SEAL 20125 ENGINEER MARSHALL G. CHEEK, JR.
DocuSigned by: Marshall G. Cheek, Jr.
6549D6EBAA3B405...
4/25/2014

| REVISIONS | | | | | | SHEET NO. |
|---|---|---|---|---|---|---|
| NO. | BY: | DATE: | NO. | BY: | DATE: | S-32 |
| 1 | | | 3 | | | TOTAL SHEETS |
| 2 | | | 4 | | | 36 |

DRAWN BY : M. POOLE DATE : 08/12
CHECKED BY : J. R. MCROY DATE : 09/12
DESIGHN ENGINEER OF RECORD : J. R. MCROY DATE : 09/12

$$$$$$$SYSTIME$$$$$
$$$$$$$$$$$$$$$$$$$$$$DGN$$$$$$$$$$$$$$$$$$$$$$$
$$$$USERNAME$$$$