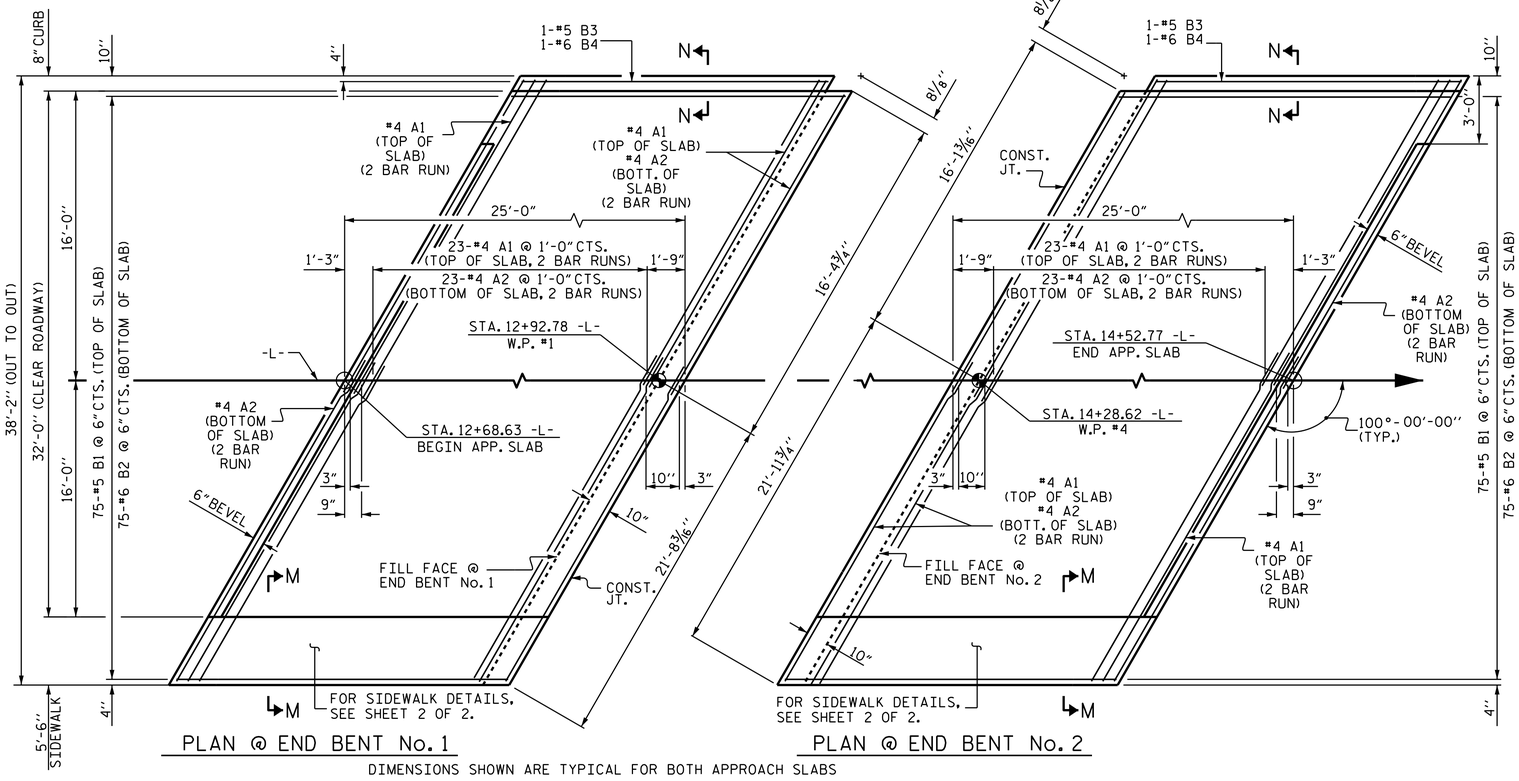


## NOTES

APPROACH SLAB SHALL NOT BE CONSTRUCTED PRIOR TO COMPLETION OF THE BRIDGE DECK.

FOR REINFORCED BRIDGE APPROACH FILL FABRIC WALL INCLUDING GEOTEXTILE, IMPERMEABLE GEOMEMBRANE, 4" Ø DRAINAGE PIPE, #78M STONE, WELDED WIRE FORM, AND SELECT MATERIAL, SEE ROADWAY PLANS.

AREA BETWEEN THE WINGWALL AND APPROACH SLAB SHALL BE GRADED TO DRAIN THE WATER AWAY FROM THE FILL FACE OF THE BRIDGE AND SHALL BE PAVED. SEE ROADWAY PLANS.

THE JOINT OPENING AT THE APPROACH SLAB/DECK INTERFACE SHALL BE SAWED NO MORE THAN 12 HOURS AFTER THE APPROACH SLAB IS CAST. THE JOINT SHALL BE CLEANED OF ALL DEBRIS BEFORE THE SEALANT IS APPLIED. THE JOINT SEALER MATERIAL SHALL CONFORM TO THE REQUIREMENTS OF SECTION 1028-3 OF THE STANDARD SPECIFICATIONS.

## BILL OF MATERIAL

### FOR ONE APPROACH SLAB (2 REQ'D)

| BAR | NO. | SIZE | TYPE | LENGTH | WEIGHT |
|---|---|---|---|---|---|
| * A1 | 52 | #4 | STR | 20'-3" | 703 |
| A2 | 52 | #4 | STR | 20'-1" | 698 |
| | | | | | |
| * B1 | 75 | #5 | STR | 24'-2" | 1890 |
| B2 | 75 | #6 | STR | 24'-8" | 2779 |
| * B3 | 1 | #5 | STR | 23'-9" | 25 |
| B4 | 1 | #6 | STR | 23'-9" | 36 |
| * B5 | 5 | #4 | STR | 24'-8" | 82 |
| | | | | | |
| * G1 | 25 | #4 | STR | 5'-2" | 86 |
| | | | | | |
| * U1 | 10 | #4 | 1 | 3'-4" | 22 |

| | |
|---|---|
| REINFORCING STEEL | 3513 LBS. |
| * EPOXY COATED REINFORCING STEEL | 2808 LBS. |
| CLASS AA CONCRETE | |
| POUR #1 SLAB | 41.1 C. Y. |
| POUR #2 SIDEWALK | 3.1 C. Y. |
| TOTAL | 44.2 C. Y. |

### BAR TYPE

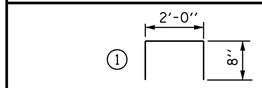


* THESE BARS ARE EPOXY COATED

## SPLICE LENGTHS

| BAR SIZE | EPOXY COATED | UNCOATED |
|---|---|---|
| #4 | 2'-0" | 1'-9" |
| #5 | 2'-6" | 2'-2" |
| #6 | 3'-10" | 2'-7" |

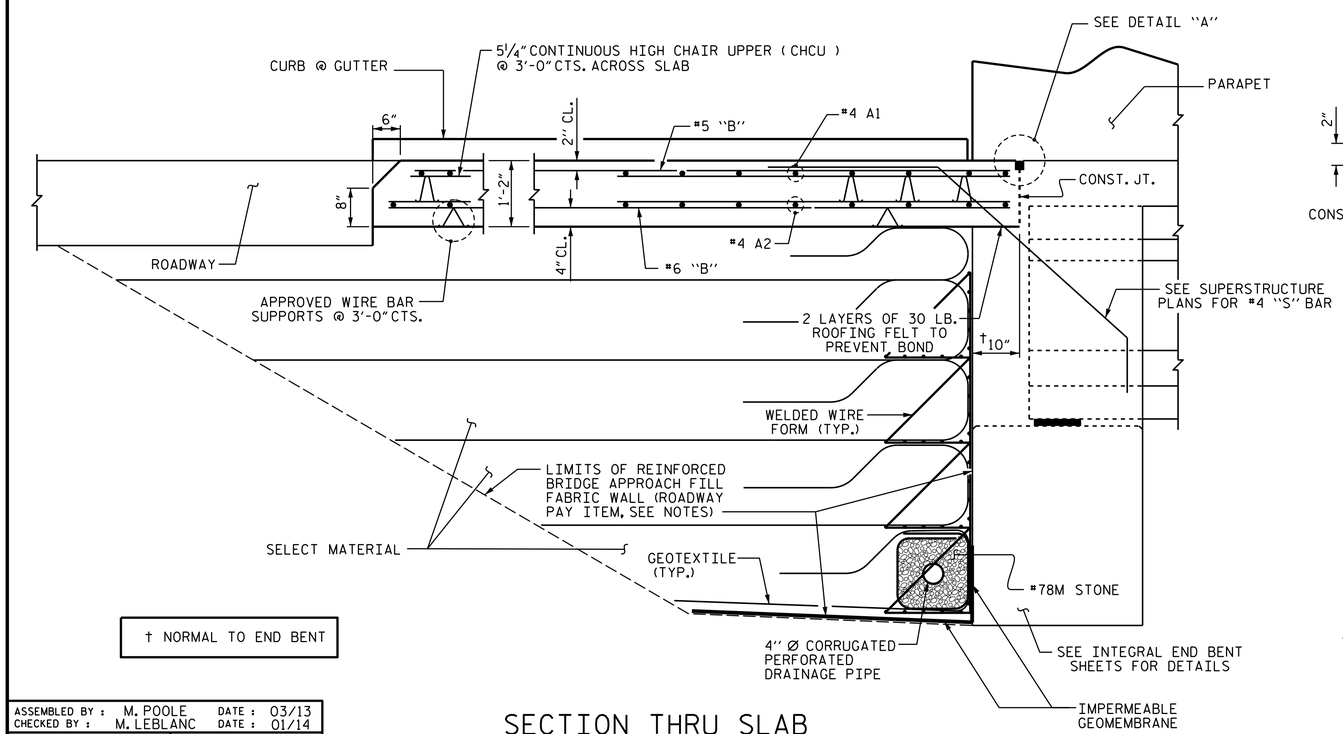


† NORMAL TO END BENT

SECTION THRU SLAB

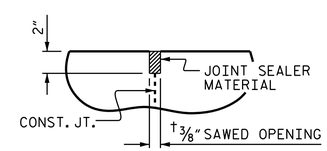


DETAIL "A"

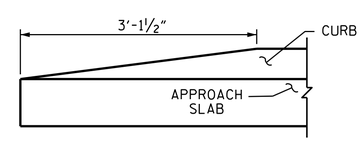


END OF CURB WITHOUT SHOULDER BERM GUTTER

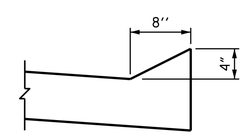


SECTION N-N

PROJECT NO. B-4983

BURKE COUNTY

STATION: 13+52.95 -L-

SHEET 1 OF 2

STATE OF NORTH CAROLINA
DEPARTMENT OF TRANSPORTATION
RALEIGH

BRIDGE APPROACH SLAB FOR INTEGRAL ABUTMENT

NORTH CAROLINA PROFESSIONAL SEAL 20125 ENGINEER MARSHALL C. CHEEK, JR.

DocuSigned by: Marshall C. Cheek, Jr.
6549D6EBAA3B405...
4/25/2014

| REVISIONS | | | | | | | | SHEET NO. |
|---|---|---|---|---|---|---|---|---|
| NO. | BY: | DATE: | NO. | BY: | DATE: | | | S-35 |
| 1 | | | 3 | | | | | TOTAL SHEETS |
| 2 | | | 4 | | | | | 36 |

| | | | |
|---|---|---|---|
| ASSEMBLED BY : | M. POOLE | DATE : | 03/13 |
| CHECKED BY : | M. LEBLANC | DATE : | 01/14 |
| DRAWN BY : TLA 10/05 | | ADDED 5/1/06 | RR KMM/GM |
| CHECKED BY : GM 5/06 | | REV. 10/1/11 | MAA/GM |
| | | REV. 12/21/11 | MAA/GM |

$$$$$$$SYSTIME$$$$$
$$$$$$$$$$$$$$$$$$$$$$DGN$$$$$$$$$$$$$$$$$$$$$$$
$$$$USERNAME$$$$