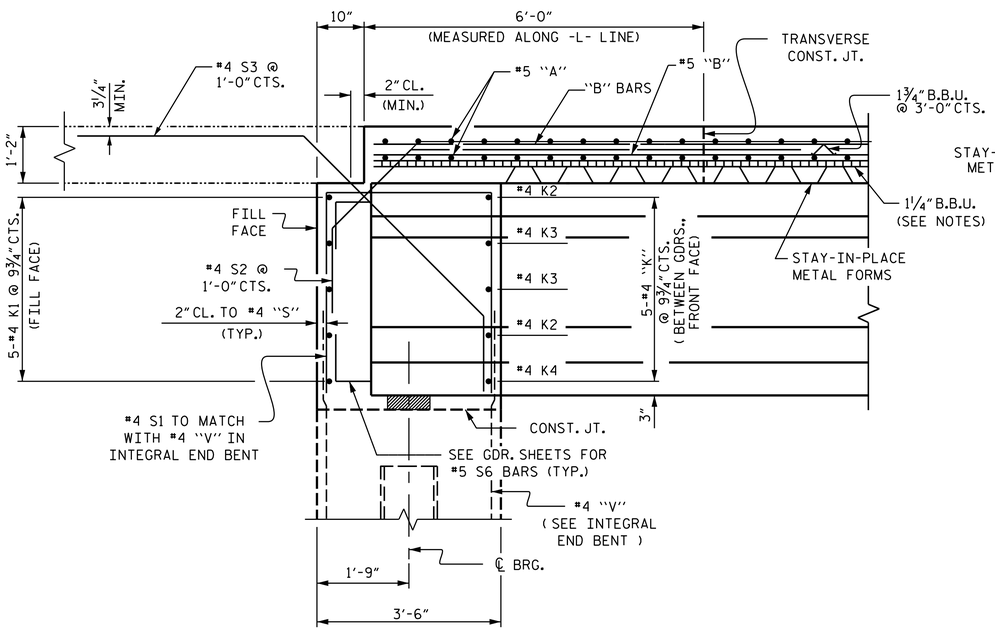


## SECTION THRU INTEGRAL END BENT

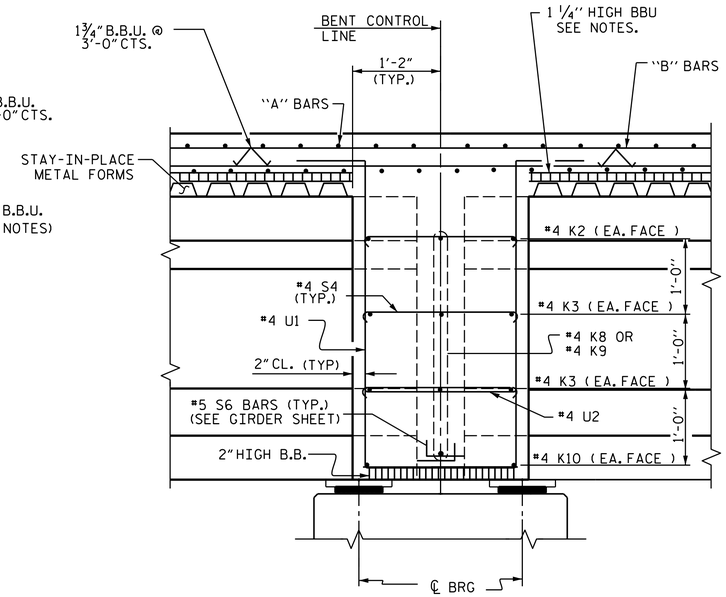


## SECTION THRU CONTINUOUS BENT DIAPHRAGM

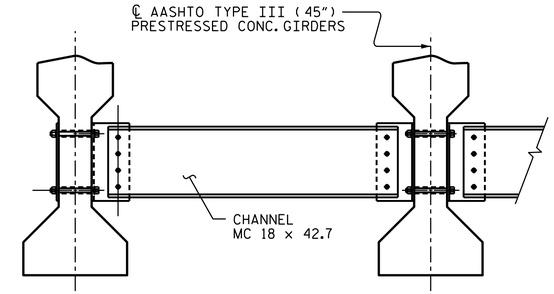


## PART SECTION AT INTERMEDIATE DIAPHRAGM

FOR INTERMEDIATE STEEL DIAPHRAGM DETAILS, SEE "INTERMEDIATE STEEL DIAPHRAGM FOR TYPE III PRESTRESSED CONCRETE GIRDERS", SHEET 5 OF 5.

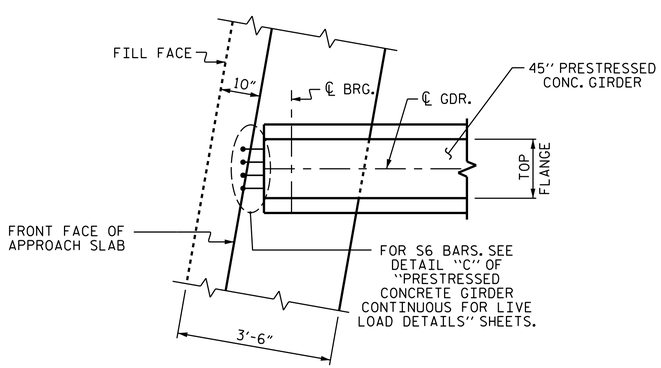


## PLAN OF GIRDER AT INTEGRAL END BENT

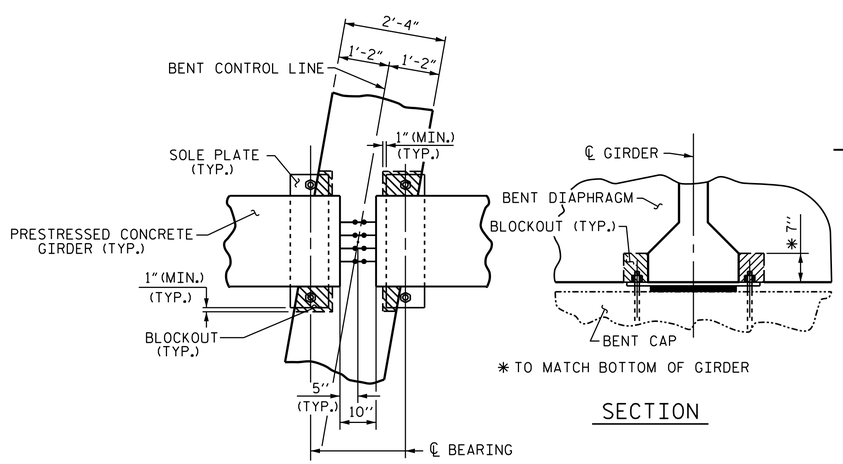


PLAN

SECTION

## BENT DIAPHRAGM BLOCK-OUT DETAIL

PROJECT NO. B-4983

BURKE COUNTY

STATION: 13+52.95 -L-

SHEET 2 OF 2

STATE OF NORTH CAROLINA
DEPARTMENT OF TRANSPORTATION
RALEIGH

SUPERSTRUCTURE

TYPICAL SECTIONS

NORTH CAROLINA PROFESSIONAL SEAL 20125 ENGINEER MARSHALL G. CHEEK, JR.

DocuSigned by: Marshall G. Cheek, Jr.
65490EEBAA3B405...
4/25/2014

| REVISIONS | | | | | | SHEET NO. |
|---|---|---|---|---|---|---|
| NO. | BY: | DATE: | NO. | BY: | DATE: | S-6 |
| 1 | | | 3 | | | TOTAL SHEETS |
| 2 | | | 4 | | | 36 |

| | | | |
|---|---|---|---|
| DRAWN BY : | V.X. NGUYEN | DATE : | 6/1/13 |
| CHECKED BY : | H.T. BARBOUR | DATE : | 4/13 |
| DESIGN ENGINEER OF RECORD: | W. J. HARRIS | DATE : | 4/14 |

$$$$$$SYSTIME$$$$$
$$$$$$$$$$$$$$$$$$$$DGN$$$$$$$$$$$$$$$$$$$$$$$$
$$$$USERNAME$$$$