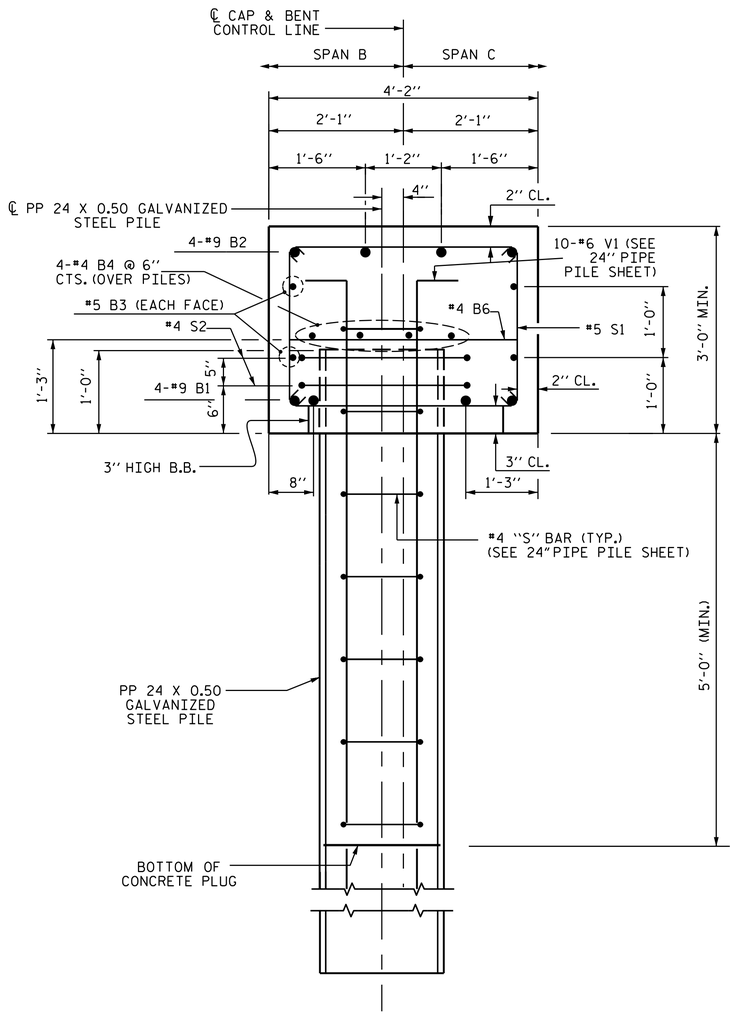


SECTION A-A

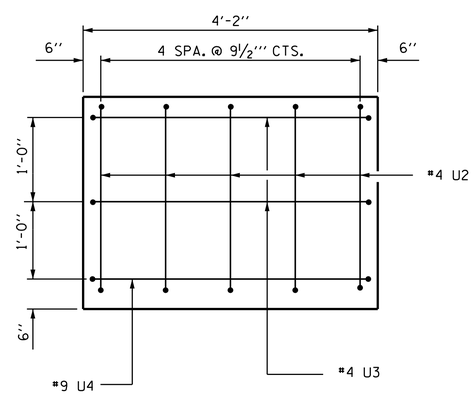


END VIEW

## BAR TYPES

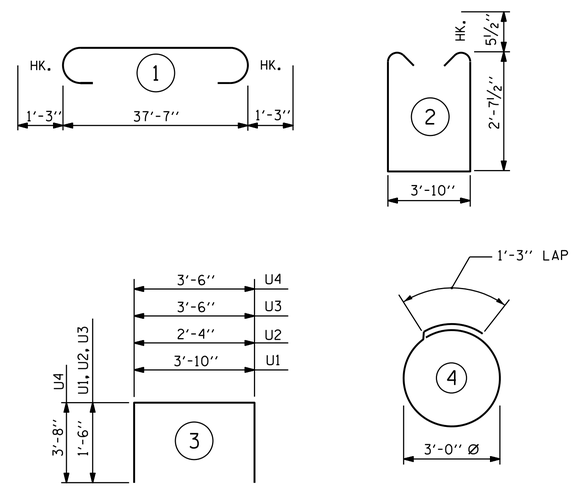


ALL BAR DIMENSIONS ARE OUT TO OUT.

## BILL OF MATERIAL

### BENT NO. 2

| BAR | NO. | SIZE | TYPE | LENGTH | WEIGHT |
|---|---|---|---|---|---|
| B1 | 4 | 9 | STR | 37'-9'' | 513 |
| B2 | 4 | 9 | 1 | 40'-1'' | 545 |
| B3 | 4 | 5 | STR | 37'-9'' | 157 |
| B4 | 8 | 4 | STR | 20'-1'' | 107 |
| B5 | 4 | 4 | STR | 12'-0'' | 32 |
| B6 | 10 | 4 | STR | 3'-10'' | 26 |
| S1 | 30 | 5 | 2 | 10'-0'' | 313 |
| S2 | 10 | 4 | 4 | 10'-8' | 71 |
| U1 | 9 | 4 | 3 | 6'-10'' | 41 |
| U2 | 10 | 4 | 3 | 5'-4'' | 36 |
| U3 | 4 | 4 | 3 | 6'-6'' | 17 |
| U4 | 2 | 9 | 3 | 10'-10'' | 74 |

REINFORCING STEEL 1932 LBS.

CLASS "A" CONCRETE
POUR #1 CAP 18.2 C.Y.
** TOTAL 18.2 C.Y.

PP 24 X 0.50
GALVANIZED STEEL PILES
NO. 5 400 LIN. FT.

** CONCRETE DISPLACED BY THE FILLED 24"Ø STEEL PIPE PILES HAS BEEN DEDUCTED.

PROJECT NO. B-4983
BURKE COUNTY
STATION: 13+52.95 -L-

SHEET 2 OF 2

STATE OF NORTH CAROLINA
DEPARTMENT OF TRANSPORTATION
RALEIGH

SUBSTRUCTURE
BENT No. 2

NORTH CAROLINA PROFESSIONAL SEAL 20125 ENGINEER MARSHALL C. CHEEK, JR.
DocuSigned by: Marshall C. Cheek, Jr.
6549D6EBAA3B405...
4/25/2014

| REVISIONS | | | | | | | |
|---|---|---|---|---|---|---|---|
| NO. | BY: | DATE: | NO. | BY: | DATE: | SHEET NO. | S-29 |
| 1 | | | 3 | | | TOTAL SHEETS | 36 |
| 2 | | | 4 | | | | |

DRAWN BY : M. POOLE DATE : 08/12
CHECKED BY : J. R. MCROY DATE : 09/12
DESIDN ENINEER OF RECORD : J. R. MCROY DATE : 09/12

$$$$$$$SYSTIME$$$$$
$$$$$$$$$$$$$$$$$$$$$$$$$DGN$$$$$$$$$$$$$$$$$$$$$$$
$$$$USERNAME$$$$