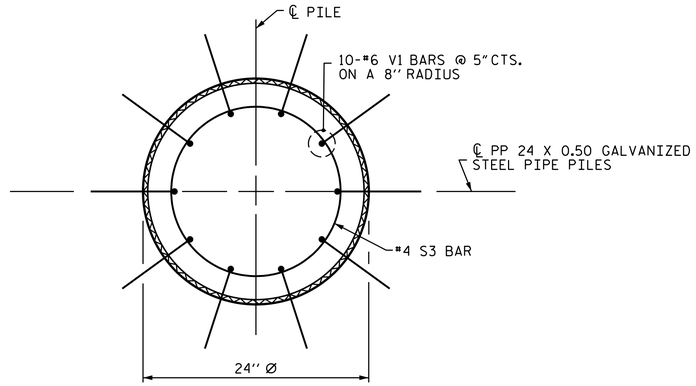


PLAN

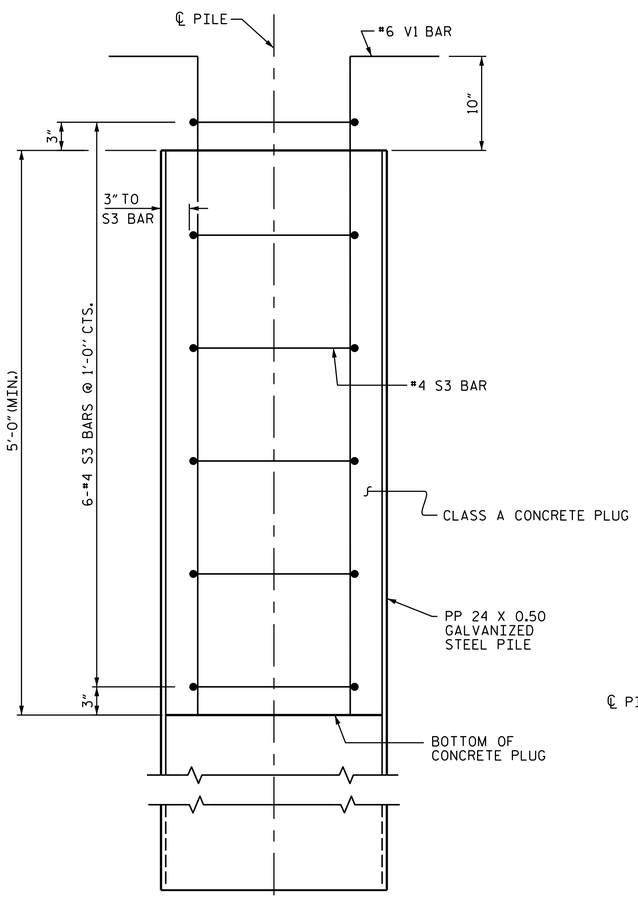


ELEVATION

PP 24 X 0.50 GALVANIZED STEEL PILE

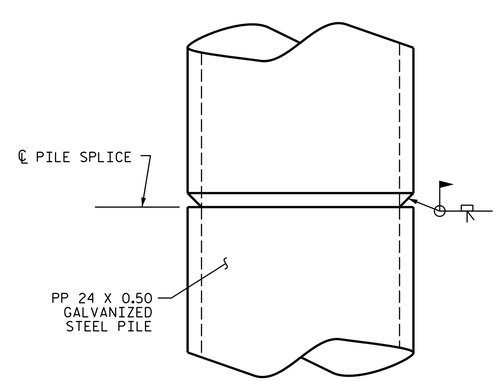


PIPE PILE SPLICE DETAIL

## NOTES

PIPE PILES SHALL BE IN ACCORDANCE WITH SECTION 1084 OF THE STANDARD SPECIFICATIONS.

GALVANIZE STEEL PIPE PILES IN ACCORDANCE WITH SECTION 1076 OF THE STANDARD SPECIFICATIONS UNLESS METALLIZING IS REQUIRED. GALVANIZING OR METALLIZING PIPE PILE PLATES IS NOT REQUIRED.

REMOVE AND REPLACE OR REPAIR TO THE SATISFACTION OF THE ENGINEER PILES THAT ARE DAMAGED, DEFORMED OR COLLAPSED DURING INSTALLATION OR DRIVING.

PILE SPLICES SHALL BE IN ACCORDANCE WITH THE STANDARD SPECIFICATIONS AND AWS D1.1.

FOR OPEN END PIPE PILES, REMOVE ENOUGH SOIL AND WATER FROM INSIDE THE PILES TO CONSTRUCT THE CONCRETE PLUG WITHOUT FOULING THE CONCRETE.

FORM THE CONCRETE PLUG SUCH THAT THE REINFORCING STEEL OR CONCRETE DOES NOT MOVE AND THE CLEARANCE FROM THE REINFORCING STEEL TO THE INSIDE OF THE PILE IS MAINTAINED AFTER CONCRETE PLACEMENT. DO NOT PLACE CONCRETE IN THE BENT CAP UNTIL THE CONCRETE PLUG HAS ATTAINED A MINIMUM COMPRESSIVE STRENGTH OF 1500 PSI.

THE REINFORCING STEEL, CLASS A CONCRETE, AND GALVANIZING ARE CONSIDERED INCIDENTAL TO THE CONTRACT UNIT PRICE BID PER LINEAR FOOT FOR PP 24 X 0.50 GALVANIZED STEEL PILES.

## BILL OF MATERIAL FOR ONE PP 24 X 0.50 GALVANIZED STEEL PILE

| BAR | NO. | SIZE | TYPE | LENGTH | WEIGHT |
|---|---|---|---|---|---|
| S3 | 6 | #4 | 1 | 6'-0" | 24 |
| | | | | | |
| V1 | 10 | #6 | 2 | 6'-8" | 100 |
| | | | | | |
| REINFORCING STEEL = | | | | | 124 LBS. |
| | | | | | |
| | | | | | |
| CLASS A CONCRETE | | | | | |
| 5'-0" MINIMUM PLUG | | | | | 0.5 CY |

## BAR TYPES

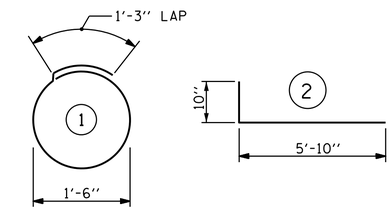


ALL BAR DIMENSIONS ARE OUT TO OUT.

PROJECT NO. B-4983
BURKE COUNTY
STATION: 13+52.95 -L-

STATE OF NORTH CAROLINA
DEPARTMENT OF TRANSPORTATION
RALEIGH

STANDARD

24" STEEL PIPE PILE

NORTH CAROLINA PROFESSIONAL SEAL 20125 ENGINEER MARSHALL G. CHEEK, JR.
DocuSigned by: Marshall G. Cheek, Jr.
65490E6BAA3B405...
4/25/2014

| REVISIONS | | | | | | |
|---|---|---|---|---|---|---|
| NO. | BY: | DATE: | NO. | BY: | DATE: | |
| 1 | | | 3 | | | |
| 2 | | | 4 | | | |

SHEET NO. S-33
TOTAL SHEETS 36

STD. NO. SPP4

| | | | |
|---|---|---|---|
| ASSEMBLED BY : M. POOLE | | DATE : 08/12 | |
| CHECKED BY : J. R. MCROY | | DATE : 09/12 | |
| DRAWN BY : TLA 8/05 | ADDED 10/1/05 | | |
| CHECKED BY : GM 9/05 | REV. 5/1/06R | MAA/KMM | |
| | REV. 10/1/11 | MAA/GM | |

$$$$$$SYSTIME$$$$$
$$$$$$$$$$$$$$$$$$$$$$$$DGN$$$$$$$$$$$$$$$$$$$$$$$$
$$$$USERNAME$$$$