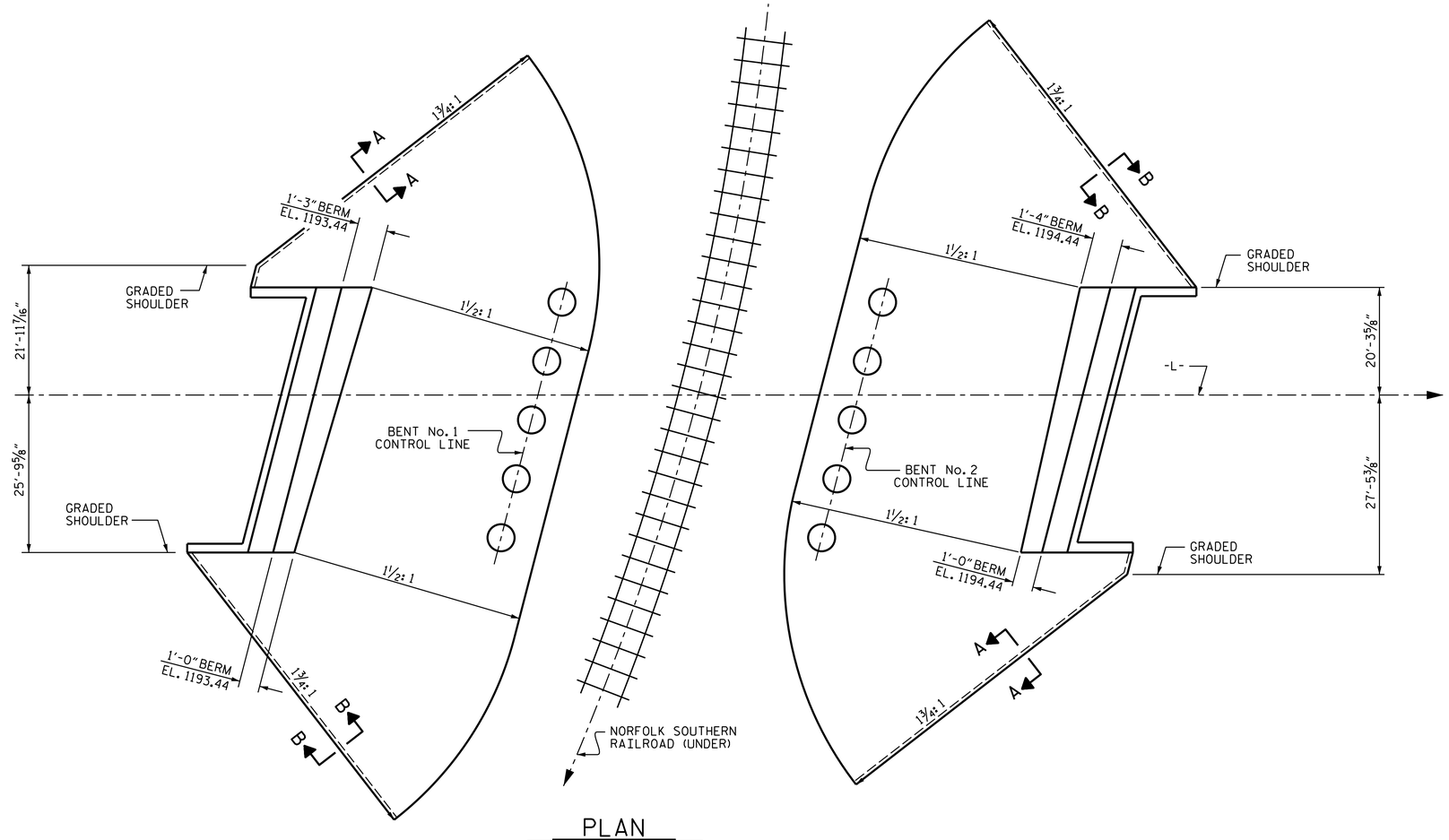


PLAN

## GENERAL NOTES

SLOPE PROTECTION SHALL BE PLACED UNDER THE ENDS OF THE BRIDGE AS SHOWN IN THE DETAILS. STRAIGHT EDGING WILL NOT BE REQUIRED UNLESS, IN THE OPINION OF THE ENGINEER, VISUAL INSPECTION INDICATES A NEED FOR IT. MEASUREMENT AND PAYMENT SHALL BE AS PRESCRIBED IN SECTION 462 OF THE STANDARD SPECIFICATIONS.

SLOPE PROTECTION SHALL CONSIST OF 4" POURED-IN-PLACE CONCRETE PAVING AS SHOWN IN THE DETAILS ON THIS SHEET. CONCRETE SHALL BE CLASS "B". THE CONCRETE SURFACE SHALL BE FLOATED WITH A WOODEN FLOAT AND FINISHED. WELDED WIRE FABRIC REINFORCING SHALL BE 6 X 6 - W1.4 X W1.4, 60" WIDE. SLOPE PROTECTION SHALL BE POURED IN 5' STRIPS AS SHOWN IN THE "POURING DETAIL" WITH 2'-0" LONG #4 BARS PLACED ALONG THE SLOPE BETWEEN STRIPS AT 1'-6" MAXIMUM SPACING. SLOPE PROTECTION MAY BE POURED IN ALTERNATE 4' AND 5' STRIPS AS SHOWN IN THE "OPTIONAL POURING DETAIL" WITH ADJACENT RUNS OF WELDED WIRE FABRIC LAPPING AT LEAST 6". THE COST OF THE WELDED WIRE FABRIC AND #4 BARS, IF USED, SHALL BE INCLUDED IN THE CONTRACT UNIT PRICE BID PER SQUARE YARD FOR SLOPE PROTECTION.

| BRIDGE @ STA. 13+52.95 -L- | 4 INCH SLOPE PROTECTION | * WELDED WIRE FABRIC 60 INCHES WIDE |
|---|---|---|
| | SQUARE YARDS | APPROX. L.F. |
| END BENT 1 | 470 | 940 |
| END BENT 2 | 465 | 930 |

* QUANTITY SHOWN IS BASED ON 5' POURS.

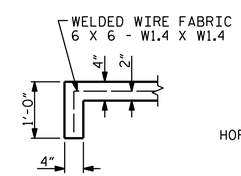


SECTION A-A

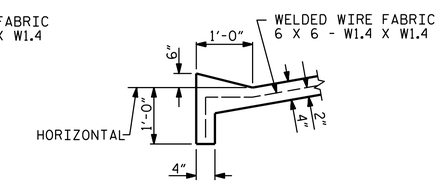


SECTION B-B

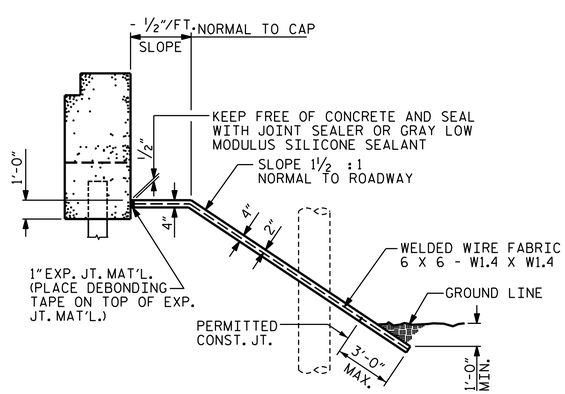


SECTION ALONG ℄ ROADWAY WITH SHOULDER PIER

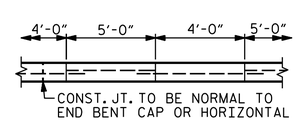


POUR A 4'-0" STRIP FIRST. STRIP WIDTHS MAY VARY IN CURVED PORTION.

OPTIONAL POURING DETAIL

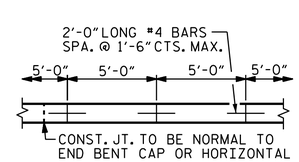


STRIP WIDTHS MAY VARY IN CURVED PORTION.

POURING DETAIL

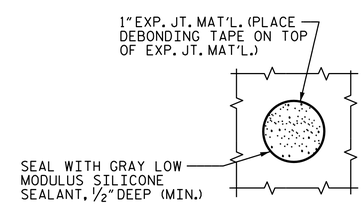


PLAN WHERE CONCRETE SLOPE PROTECTION MUST BE PLACED AROUND A BENT STEEL PIPE PILE

PROJECT NO. B-4983

BURKE COUNTY

STATION: 13+52.95 -L-

STATE OF NORTH CAROLINA
DEPARTMENT OF TRANSPORTATION
RALEIGH

STANDARD

SLOPE PROTECTION DETAILS

NORTH CAROLINA PROFESSIONAL SEAL 20125 ENGINEER MARSHALL C. CHECK, JR.

DocuSigned by: Marshall C. Check, Jr.
65490DEBAA3B405...
4/25/2014

| REVISIONS | | | | | | | | SHEET NO. |
|---|---|---|---|---|---|---|---|---|
| NO. | BY: | DATE: | NO. | BY: | DATE: | | | S-34 |
| 1 | | | 3 | | | | | TOTAL SHEETS |
| 2 | | | 4 | | | | | 36 |

| | | | |
|---|---|---|---|
| ASSEMBLED BY : D. HODGE | | DATE : | 12/13 |
| CHECKED BY : V.X. NGUYEN | | DATE : | 1/14 |
| DRAWN BY : ELR 5/92 | REV. 5/1/06 | TLA/GM | |
| CHECKED BY : GRP 6/92 | REV. 10/1/11 | MAA/GM | |
| | REV. 12/21/11 | MAA/GM | |

STD. NO. SP1

$$$$$$$SYSTIME$$$$$
$$$$$$$$$$$$$$$$$$$$$$$$DGN$$$$$$$$$$$$$$$$$$$$$$$$
$$$$USERNAME$$$$