## NOTES

THE CONTRACTOR SHALL PROVIDE FOR INSTALLATION OF THE 4" DIAMETER DRAIN PIPE THROUGH THE WING WALL AS REQUIRED FOR REINFORCED BRIDGE APPROACH FILLS. SEE THE ROADWAY PLANS. REINFORCING STEEL IN THE WING WALL MAY BE SHIFTED AS NECESSARY TO CLEAR THE DRAIN PIPE.

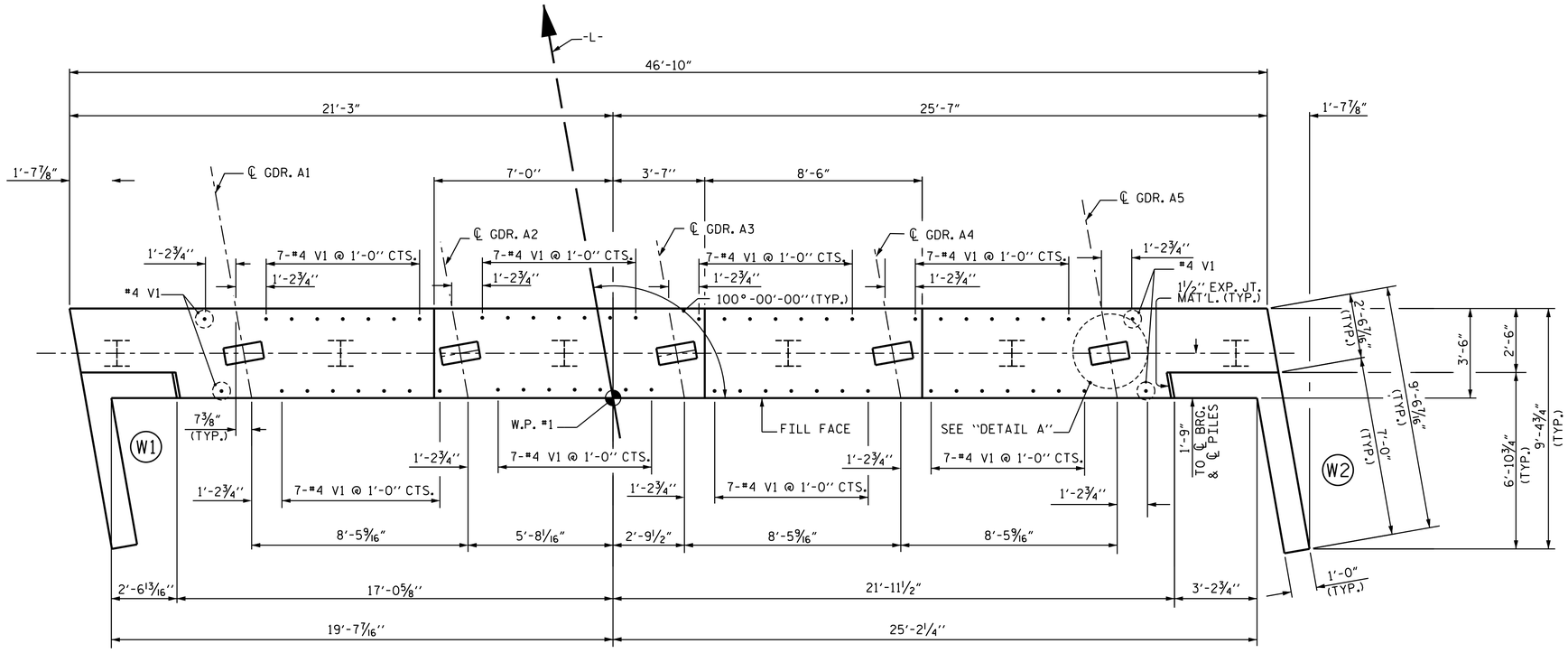


## PLAN

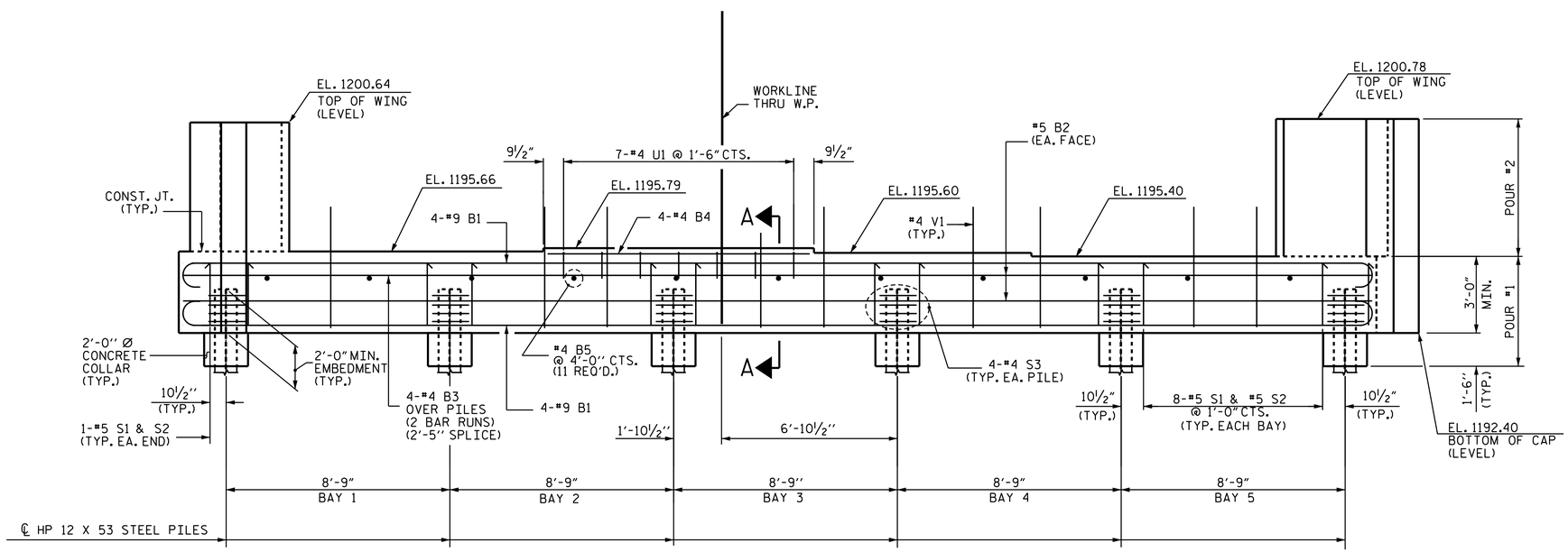


## ELEVATION

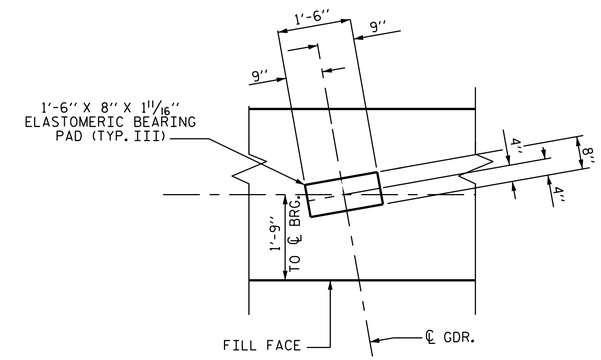


## DETAIL A

PROJECT NO. B-4983

BURKE COUNTY

STATION: 13+52.95 -L-

SHEET 1 OF 3

STATE OF NORTH CAROLINA
DEPARTMENT OF TRANSPORTATION
RALEIGH

SUBSTRUCTURE
END BENT No. 1

NORTH CAROLINA PROFESSIONAL SEAL 20125 ENGINEER MARSHALL R. CHEEK, JR.

DocuSigned by: Marshall R. Cheek, Jr.
6549D6EBAA3B405...
4/25/2014

| REVISIONS | | | | | | | | SHEET NO. |
|---|---|---|---|---|---|---|---|---|
| NO. | BY: | DATE: | NO. | BY: | DATE: | | | S-23 |
| 1 | | | 3 | | | | | TOTAL SHEETS |
| 2 | | | 4 | | | | | 36 |

| | | | |
|---|---|---|---|
| DRAWN BY : | M. POOLE | DATE : | 5/12 |
| CHECKED BY : | J. R. MCROY | DATE : | 9/12 |
| DESIGN ENGINEER OF RECORD : | J. R. MCROY | DATE : | 9/12 |

$$$$$$$SYSTIME$$$$$
$$$$$$$$$$$$$$$$$$$$$$DGN$$$$$$$$$$$$$$$$$$$$$$
$$$$USERNAME$$$$