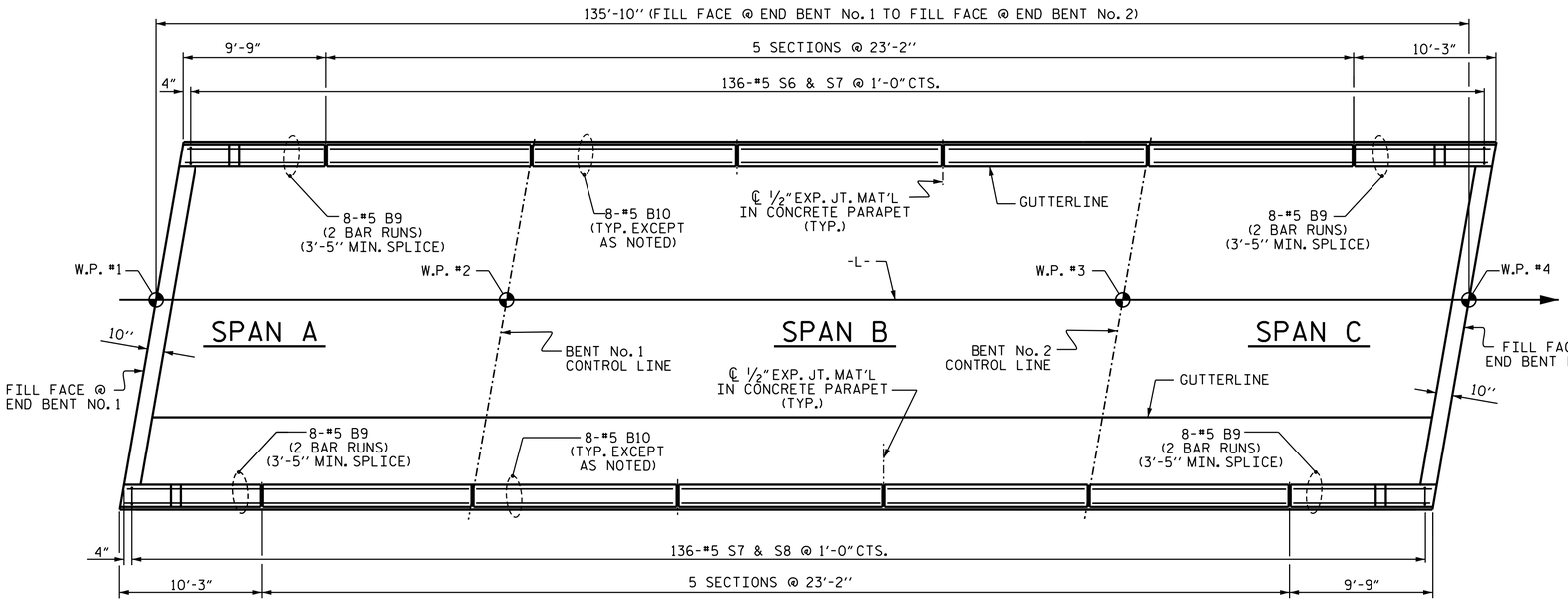


PLAN OF PARAPET

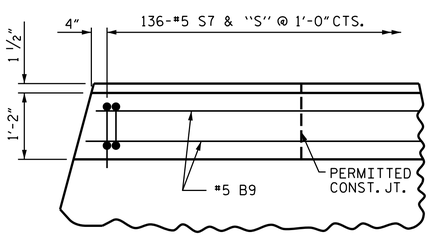


PLAN OF PARAPET

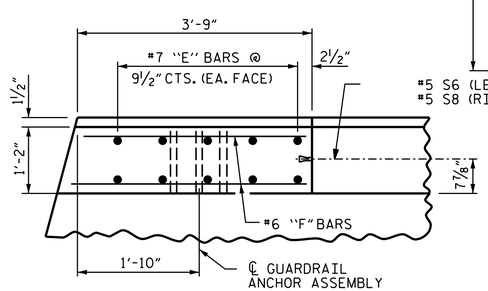


PLAN OF END POST

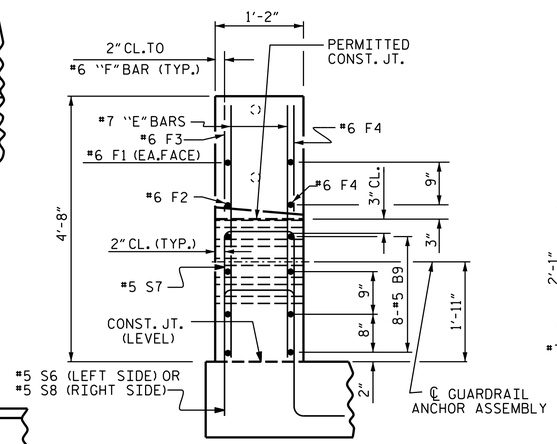


END VIEW

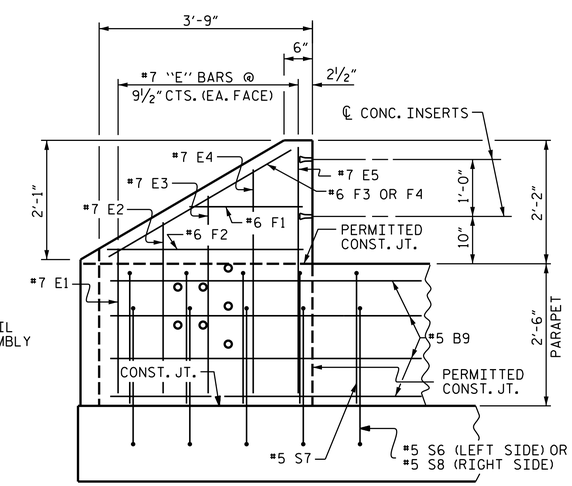


ELEVATION

PARAPET AND END POST FOR TWO BAR RAIL

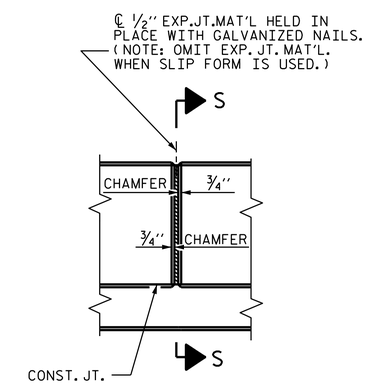


ELEVATION AT EXPANSION JOINTS

## NOTES

CONCRETE PARAPET IN A CONTINUOUS UNIT SHALL NOT BE CAST UNTIL ALL SLAB CONCRETE IN THE UNIT HAS BEEN CAST AND HAS REACHED A MINIMUM COMPRESSIVE STRENGTH OF 3,000 PSI.

ALL REINFORCING STEEL IN PARAPET AND END POSTS SHALL BE EPOXY COATED.

THE #5 S6 OR #5 S8 BARS MAY BE SHIFTED SLIGHTLY IN ORDER TO MAINTAIN A 2" MINIMUM CLEARANCE TO THE 1/2" EXPANSION JOINT MATERIAL IN PARAPET.

FOR DETAILS OF CONCRETE INSERTS IN END POSTS, SEE "RAIL POST SPACINGS AND END OF RAIL DETAILS" SHEET.

FOR DETAILS OF GUARDRAIL ANCHOR ASSEMBLIES, SEE "GUARDRAIL ANCHORAGE DETAILS FOR METAL RAILS" SHEET.

GROOVED CONTRACTION JOINTS, 1/2" IN DEPTH, SHALL BE TOOLED IN ALL EXPOSED FACES OF THE PARAPET IN ACCORDANCE WITH ARTICLE 825-10(B) OF THE STANDARD SPECIFICATIONS. THE CONTRACTION JOINT SHALL BE LOCATED AT A SPACING OF 8FT. TO 10FT. BETWEEN EXPANSION JOINTS. NO CONTRACTION JOINTS WILL BE REQUIRED FOR SEGMENTS LESS THAN 10 FEET IN LENGTH.

## BILL OF MATERIAL

FOR CONCRETE PARAPET & END POSTS ONLY

| BAR | No. | SIZE | TYPE | LENGTH | WEIGHT |
|---|---|---|---|---|---|
| * B9 | 64 | #5 | STR. | 6'-9" | 451 |
| * B10 | 80 | #5 | STR. | 22'-9" | 1898 |
| * E1 | 8 | #7 | STR. | 2'-6" | 41 |
| * E2 | 8 | #7 | STR. | 3'-0" | 49 |
| * E3 | 8 | #7 | STR. | 3'-6" | 57 |
| * E4 | 8 | #7 | STR. | 4'-0" | 65 |
| * E5 | 8 | #7 | STR. | 4'-4" | 71 |
| * F1 | 8 | #6 | STR. | 1'-10" | 22 |
| * F2 | 8 | #6 | STR. | 3'-0" | 36 |
| * F3 | 4 | #6 | STR. | 3'-11" | 24 |
| * F4 | 4 | #6 | STR. | 4'-0" | 24 |
| * S6 | 136 | #5 | 1 | 6'-10" | 969 |
| * S7 | 272 | #5 | 2 | 5'-6" | 1560 |
| * S8 | 136 | #5 | 1 | 8'-4" | 1182 |
| * EPOXY COATED REINFORCING STEEL | | | | | 6,449 LBS. |
| CLASS AA CONCRETE | | | | | 30.2 C.Y. |
| 1'-2" X 2'-6" CONCRETE PARAPET | | | | | 271.67 LIN. FT. |

* THESE BARS ARE EPOXY COATED

## BAR TYPE

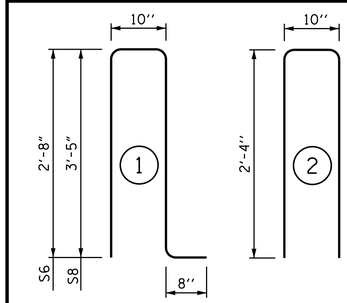


BAR DIMENSIONS ARE OUT TO OUT

PROJECT NO. B-4983

BURKE COUNTY

STATION: 13+52.95 -L-

SHEET 1 OF 4

STATE OF NORTH CAROLINA
DEPARTMENT OF TRANSPORTATION
RALEIGH

SUPERSTRUCTURE
1'-2" x 2'-6" CONCRETE PARAPET DETAILS

NORTH CAROLINA PROFESSIONAL SEAL 20125 ENGINEER MARSHALL G. CHECK, JR.

4/25/2014 Marshall G. Check, Jr.
6545D6EBAA38A05...

| REVISIONS | | | | | | SHEET NO. |
|---|---|---|---|---|---|---|
| NO. | BY: | DATE: | NO. | BY: | DATE: | S-17 |
| 1 | | | 3 | | | TOTAL SHEETS |
| 2 | | | 4 | | | 36 |

DRAWN BY : V.X. NGUYEN DATE : 2-27-13
CHECKED BY : H.T. BARBOUR DATE : 4-13

$$$$$$$SYSTIME$$$$$
$$$$$$$$$$$$$$$$$$$$$$$$DGN$$$$$$$$$$$$$$$$$$$$$$$$
$$$$USERNAME$$$$