PROJECT REFERENCE NO.	SHEET NO.
B-4983	Sig 10 M 7

Reinforcing Steel Bars

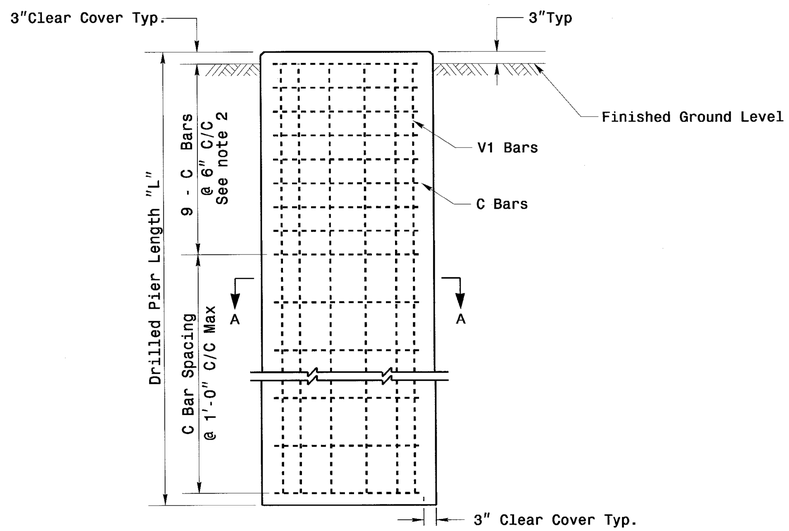

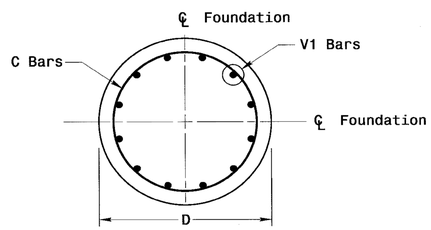

Section A-A

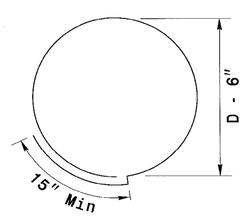

Typical "C" Bars

REINFORCING STEEL TABLE FOR STANDARD DRILL PIER SHAFT (4'-0" DIAMETER)						
Shaft Dia (in.)	Conc. Volume (cu. yds.)	Bar Name	MIN.	Size	Type	Length
48"	.465 x L	V1	***	#8	STR.	**
		C	*	#4	CIR.	12'-6"

* See Note No. 1
** See Note No. 3
*** See Note No. 4

Typical Foundation Anchor Bolt Details

(Reinforcing Cage Not Shown for Clarity)

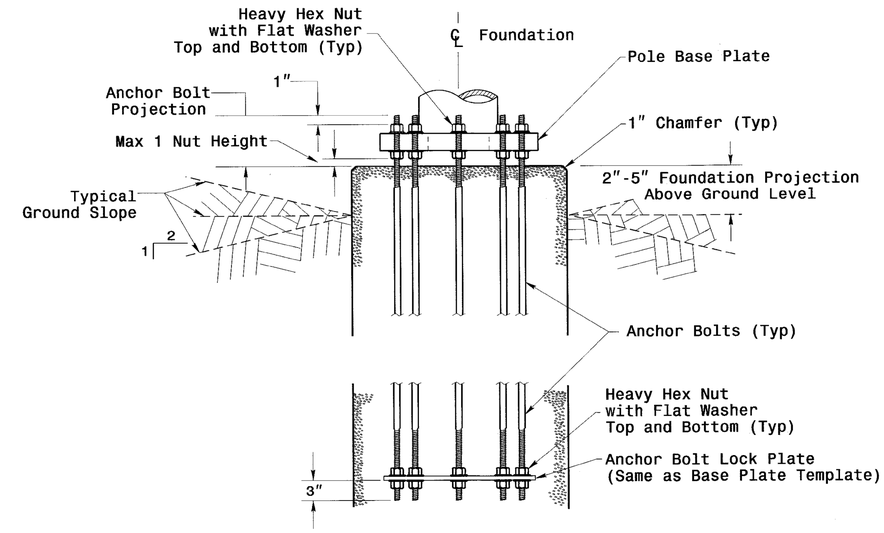

Typical Foundation Conduit Details

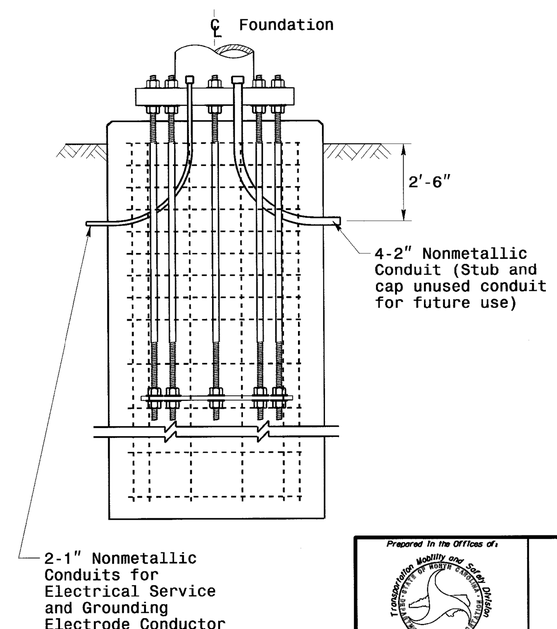

Notes

1. The number of C-bars is based on foundation depth and/or as required. For standard foundations, see sheets M 8 and M 9 for details.
2. Circular tie reinforcing rings may be vertically adjusted by +/- 3" at a depth between 2'-0" and 3'-0" to facilitate the installation of electrical conduit entering in the cage.
3. The length of V1-bars is based on foundation depth. For standard foundations, see sheets M 8 and M 9 for details. Vertical reinforcing bars (V1) may be horizontally adjusted by +/-3"to facilitate the installation of electrical conduit entering into the cage.
4. Provide vertical reinforcement as required per design. See sheets M 8 and M9 for details.

Construction Details – Foundations

Prepared In the Offices of: Transportation Mobility and Safety Division, STATE OF NORTH CAROLINA DEPARTMENT OF TRANSPORTATION, Signal Design Section
750 N.Greenfield Pkwy,Garner,NC 27529

SCALE: 0 NA — NONE

Construction Details
Foundations

PLAN DATE: AUGUST 2013	DESIGNED BY: K.C. DURIGON
PREPARED BY: N. BITTING	REVIEWED BY: D.C. SARKAR

REVISIONS	INIT.	DATE

SEAL: NORTH CAROLINA PROFESSIONAL SEAL 028094 ENGINEER DEBESH C. SARKAR

D. Sarkar 2.7.2014
SIGNATURE DATE

SIG. INVENTORY NO.

30-JAN-2014 16:49
S:\ITS&SU\ITS Signals\Workgroups\Structures\Drawings\2012 Standard Strain Pole Dwgs\2012 M7 All Foundation Fabrication Details (2).dgn
dsarkar