PROJECT REFERENCE NO.	SHEET NO.
B-4983	Sig. 8 M 3

Fabrication Details – Strain Poles

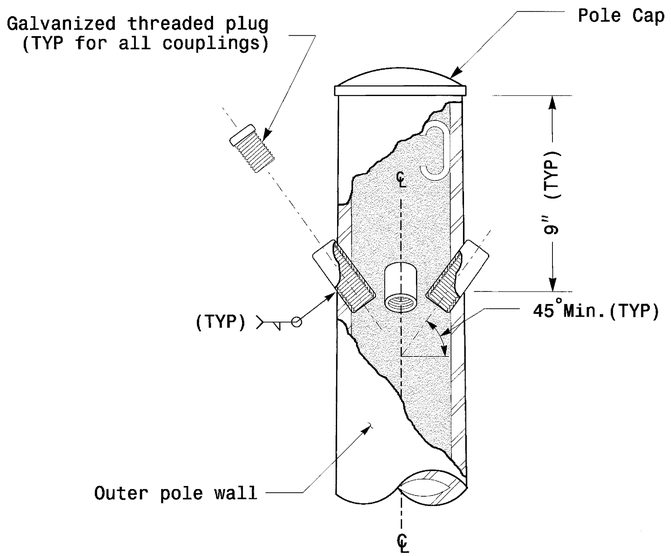

Cable Entrances at Top of Pole

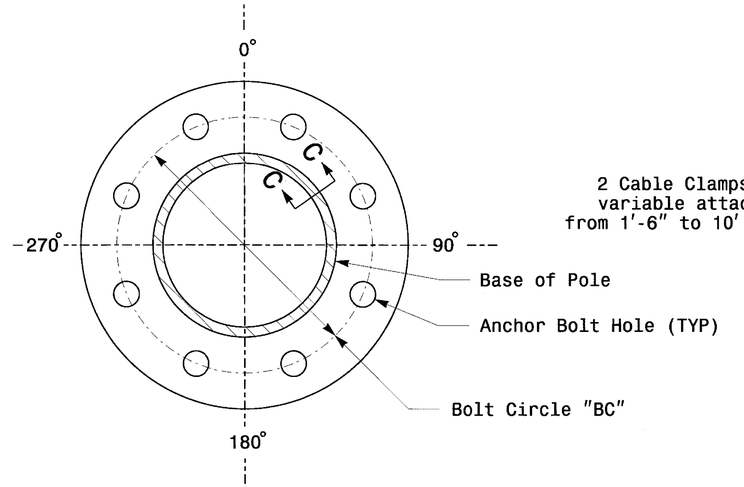

Section B-B

(See drawing M2)

Pole Base Plate

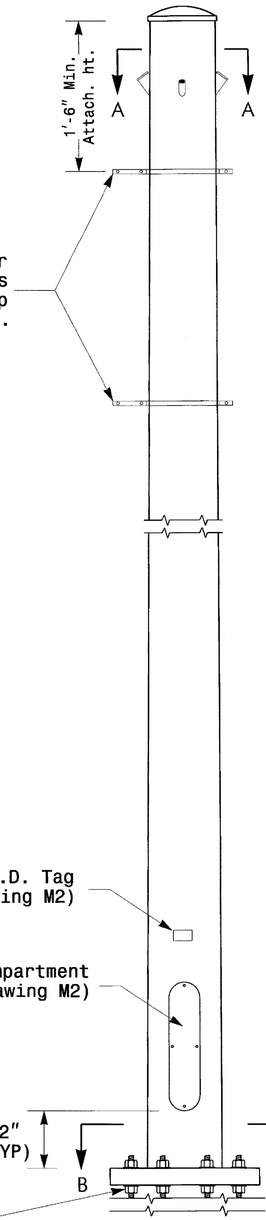

Monotube Strain Pole
(.14"/Foot Taper)

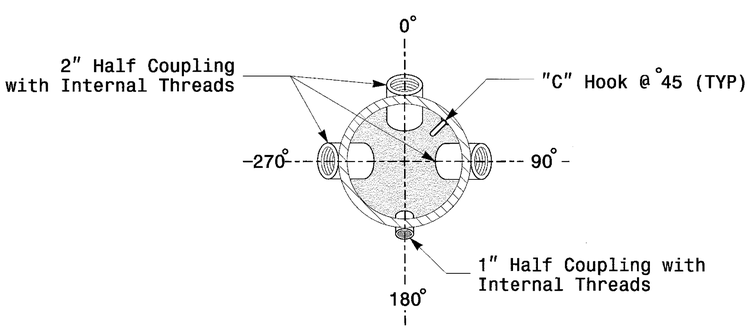

Section A-A

Radial Orientation for Factory Installed Accessories at Top of Pole

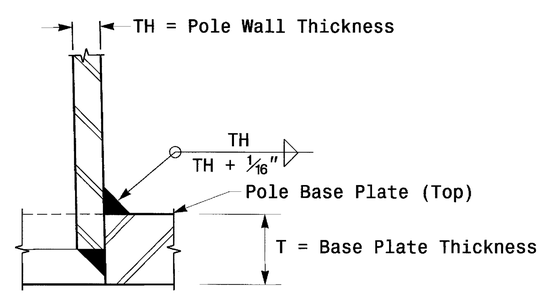

Section C-C

Socket Connection Weld Detail

Prepared in the Offices of:
Transportation Mobility and Safety Division
Signal Design Section
750 N. Greenfield Pkwy, Garner, NC 27529

Typical Fabrication Details
For Strain Poles

PLAN DATE:	AUGUST 2013	DESIGNED BY:	C.F. ANDREWS
PREPARED BY:	N. BITTING	REVIEWED BY:	D.C. SARKAR

REVISIONS	INIT.	DATE

SCALE 0 NA
NONE

SEAL
NORTH CAROLINA PROFESSIONAL SEAL 028094 ENGINEER DEBESH C. SARKAR
D. Sarkar 8.7.2013
SIGNATURE DATE
SIG. INVENTORY NO.

07-AUG-2013 13:11
S:\TSS\Units\Workgroups\Structures\Drawings\2012 Standard Strain Pole Dwgs\2012 m3.dgn
nbitting