DocuSign Envelope ID: 58001018-A036-478D-9E6F-67672E0B0633

PROJECT REFERENCE NO.	SHEET NO.
B-4983	Sig. 4

PHASING DIAGRAM

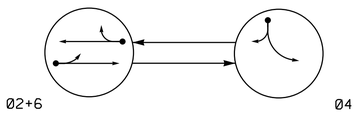

PHASING DIAGRAM DETECTION LEGEND

- DETECTED MOVEMENT
- UNDETECTED MOVEMENT (OVERLAP)
- UNSIGNALIZED MOVEMENT
- PEDESTRIAN MOVEMENT

TABLE OF OPERATION

SIGNAL FACE	PHASE 02+6	PHASE 04	FLASH
21,22	G	R	Y
41,42	R	G	R
61,62	G	R	Y

SIGNAL FACE I.D.

All Heads L.E.D.

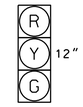

21,22
41,42
61,62

OASIS 2070 LOOP & DETECTOR INSTALLATION CHART

INDUCTIVE LOOPS					DETECTOR PROGRAMMING							
LOOP	SIZE (FT)	DISTANCE FROM STOPBAR (FT)	TURNS	NEW LOOP	PHASE	CALLING	EXTENSION	FULL TIME DELAY	STRETCH TIME	DELAY TIME	SYSTEM LOOP	NEW CARD
2A	6X6	420	4	Y	2	Y	Y	-	-	-	-	Y
2B	6X40	0	2-4-2	Y	2	Y	Y	Y	2.0	5	-	Y
4A	6X40	+5	2-4-2	Y	4	Y	Y	-	-	10	-	Y
6A	6X6	420	4	Y	6	Y	Y	-	-	-	-	Y

2 Phase
Fully Actuated
Isolated

NOTES

1. Refer to "Roadway Standard Drawings NCDOT" dated January 2012 and "Standard Specifications for Roads and Structures" dated January 2012.
2. Do not program signal for late night flashing operation unless otherwise directed by the Engineer.
3. Set all detector units to presence mode.
4. Locate new cabinet so as not to obstruct sight distance of vehicles turning right on red.

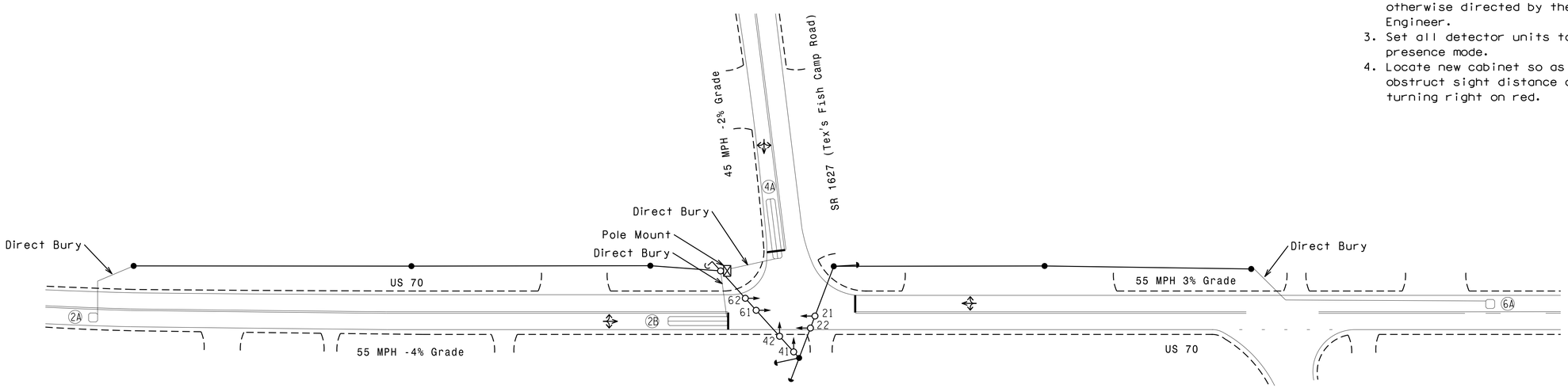

OASIS 2070 TIMING CHART

FEATURE	PHASE 2	PHASE 4	PHASE 6
Min Green 1 *	14	7	14
Extension 1 *	6.0	1.0	6.0
Max Green 1 *	90	20	90
Yellow Clearance	5.6	3.0	4.9
Red Clearance	1.0	1.8	1.0
Red Revert	2.0	2.0	2.0
Walk 1 *	-	-	-
Don't Walk 1	-	-	-
Seconds Per Actuation *	-	-	2.5
Max Variable Initial *	-	-	46
Time Before Reduction *	15	-	15
Time To Reduce *	30	-	30
Minimum Gap	3.4	-	3.4
Recall Mode	MIN RECALL	-	MIN RECALL
Vehicle Call Memory	YELLOW	-	YELLOW
Dual Entry	-	-	-
Simultaneous Gap	ON	ON	ON

* These values may be field adjusted. Do not adjust Min Green and Extension times for phases 2 and 6 lower than what is shown. Min Green for all other phases should not be lower than 4 seconds.

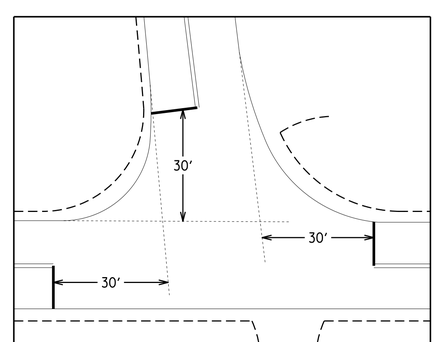

PROPOSED STOPBAR LOCATIONS

Not to Scale

LEGEND

PROPOSED		EXISTING
	Traffic Signal Head	
	Modified Signal Head	N/A
	Sign	
	Pedestrian Signal Head With Push Button & Sign	
	Signal Pole with Guy	
	Signal Pole with Sidewalk Guy	
	Inductive Loop Detector	
	Controller & Cabinet	
	Junction Box	
	2-in Underground Conduit	
N/A	Right of Way	
	Directional Arrow	

New Installation - Temporary

Prepared in the Offices of:
Transportation Mobility and Safety Division
Signal Design Section
750 N.Greenfield Pkwy,Garner,NC 27529

US 70
at
SR 1627 (Tex's Fish Camp Road)

Division 13 Burke County Hildebran

PLAN DATE: February 2014 REVIEWED BY: Z.M. Little
PREPARED BY: C.L. Sweeney REVIEWED BY:

SCALE 0 40 1"=40'

REVISIONS	INIT.	DATE

SEAL
NORTH CAROLINA PROFESSIONAL SEAL 30530 ENGINEER ZACHARY M. LITTLE

DocuSigned by: Zachary M. Little 2/26/2014
SIGNATURE DATE

SIG. INVENTORY NO. 13-1247 T

27-FEB-2014 11:35
R:\Traffic\Signals\Designs\Signals\13-1247\31247_sig.dgn_yyyymmdd.dgn
zmlittle