DocuSign Envelope ID: E65A348D-36F5-463B-B776-EC933A8E9BB1

5/14/99

C1	PROP. APPROX. 3″ ASPHALT CONCRETE SURFACE COURSE TYPE S9.5B, AT AN AVERAGE RATE OF 168 LBS. PER SQ. YD. IN EACH OF TWO LAYERS.
C2	PROP. VAR. DEPTH ASPHALT CONCRETE SURFACE COURSE, TYPE S9.5B, AT AN AVERAGE RATE OF 112 LBS. PER SQ. YD. PER 1″ DEPTH. TO BE PLACED IN LAYERS NOT TO EXCEED 2″ IN DEPTH.
D1	PROP. APPROX. 2½″ ASPHALT CONCRETE INTERMEDIATE COURSE, TYPE I19.0B, AT AN AVERAGE RATE OF 285 LBS. PER SQ. YD.
D2	PROP. VAR. DEPTH ASPHALT CONCRETE INTERMEDIATE COURSE, TYPE I19.0B, AT AN AVERAGE RATE OF 114 LBS. PER SQ. YD. PER 1″ DEPTH, TO BE PLACED IN LAYERS NOT LESS THAN 2½″ IN DEPTH OR GREATER THAN 4″ IN DEPTH.
E1	PROP. APPROX. 4″ ASPHALT CONCRETE BASE COURSE, TYPE B25.0B, AT AN AVERAGE RATE OF 456 LBS. PER SQ. YD.
E2	PROP. VAR. DEPTH ASPHALT CONCRETE BASE COURSE, TYPE B25.0B, AT AN AVERAGE RATE OF 114 LBS. PER SQ. YD. PER 1″ DEPTH. TO BE PLACED IN LAYERS NOT LESS THAN 4″ IN DEPTH OR GREATER THAN 5½″ IN DEPTH.
J	PROP. 8″ AGGREGATE BASE COURSE.
P	PRIME COAT AT THE RATE OF .35 GAL. PER SQ. YD.
R	SHOULDER BERM GUTTER.
T	EARTH MATERIAL.
U	EXISTING PAVEMENT.
W	WEDGING.

NOTE: PAVEMENT EDGE SLOPES ARE 1:1 UNLESS SHOWN OTHERWISE.

PROJECT REFERENCE NO.	SHEET NO.
B-4591	2
R/W SHEET NO.	

ROADWAY DESIGN ENGINEER: NORTH CAROLINA PROFESSIONAL SEAL 22007 ENGINEER JASON MOORE — DocuSigned by: Jason Moore — A1ED8869AEC24C3... — 2/19/2014

PAVEMENT DESIGN ENGINEER: NORTH CAROLINA PROFESSIONAL SEAL 22896 ENGINEER CLARK S. MORRISON — DocuSigned by: Clark S. Morrison — B0A110D01E004C4... — 2/19/2014

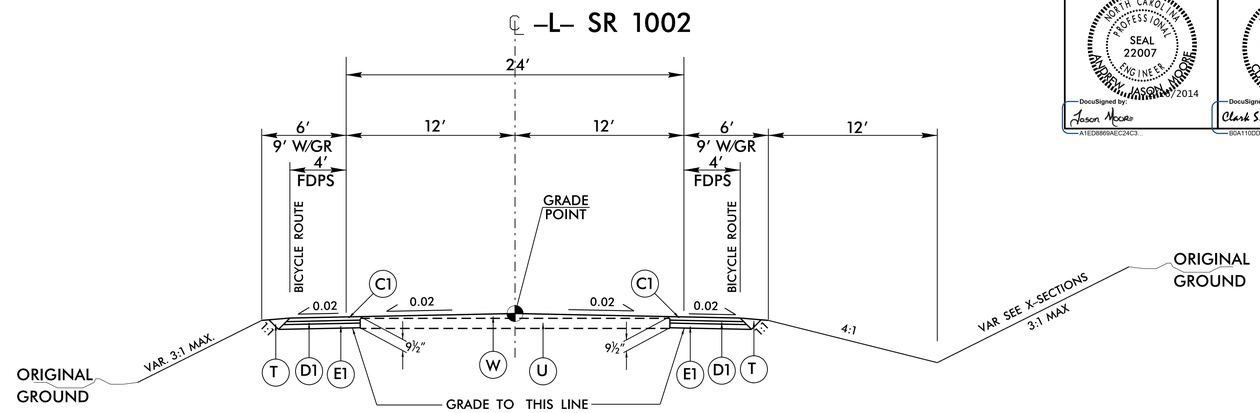

TYPICAL SECTION NO.1

USE TYPICAL SECTION NO.1 AS FOLLOWS

–L– STA. 13+50.00 TO STATION 14+00.00
–L– STA. 33+35.00 TO STATION 34+70.00

TRANSITION FROM EXISTING TO TYPICAL SECTION NO.1

–L– STA. 13+00.00 TO STATION 13+50.00
–L– STA. 34+70.00 TO STATION 35+20.00

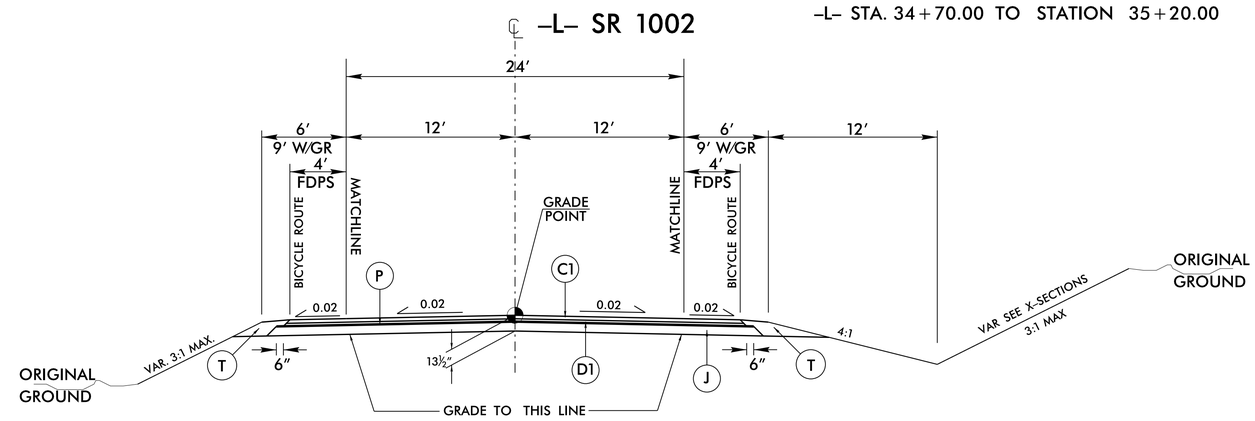

TYPICAL SECTION NO.2

USE TYPICAL SECTION NO.2 AS FOLLOWS:

–L– STA. 14+00.00 TO STATION 22+80.00 (BEGIN BRIDGE)
–L– STA. 23+70.00 (END BRIDGE) TO STATION 33+35.00

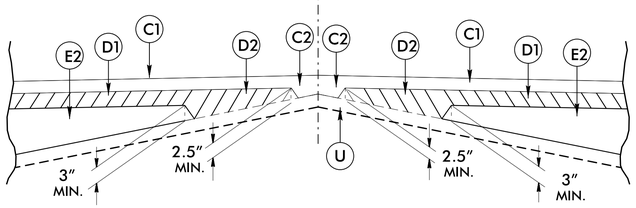

Detail Showing Method of Wedging

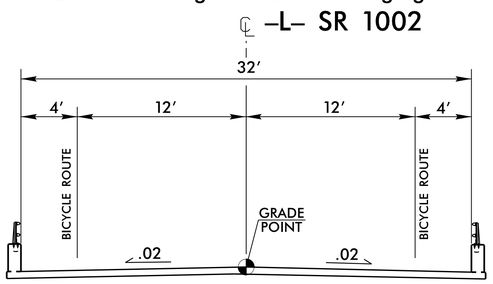

TYPICAL SECTION ON STRUCTURE

–L– STA. 22+80.00 TO STATION 23+70.00

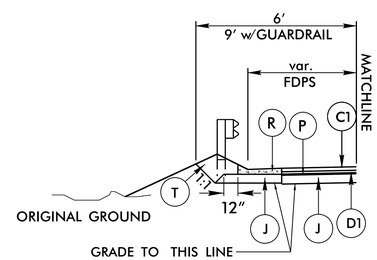

INSET A

USE INSET A AS FOLLOWS:

–L– STA 21+92.00 TO STA 22+55.83 LT
–L– STA 20+30.00 TO STA 22+55.83 RT
–L– STA 23+94.17 TO STA 26+20.00 LT
–L– STA 23+94.17 TO STA 24+58.00 RT

19-FEB-2014 16:11
H:\Roadway\Proj\b4591_Rdy_typ.dgn
$$$$USERNAME$$$$