DocuSign Envelope ID: E6FE64D3-0D23-44A6-A9D5-3E2C1F8C7A40

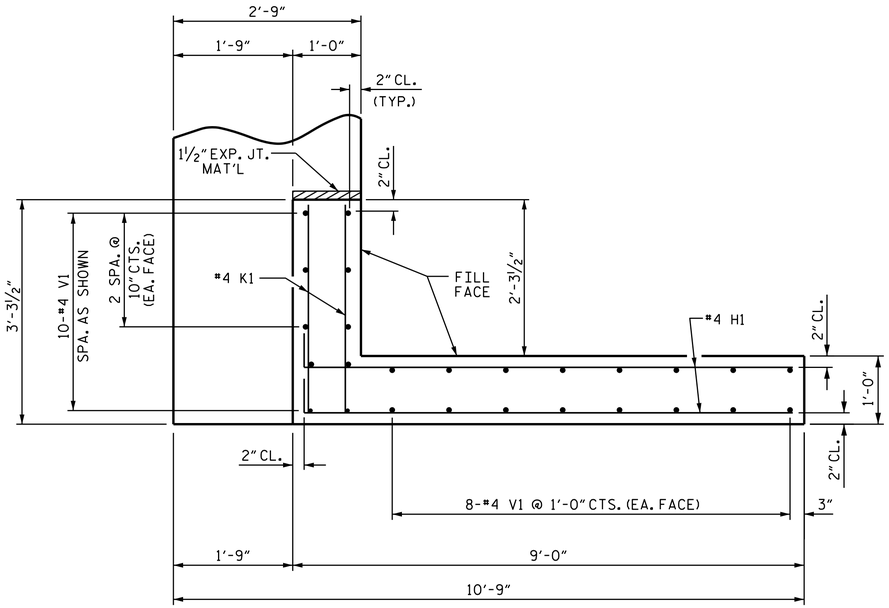

PLAN OF WING (W1)

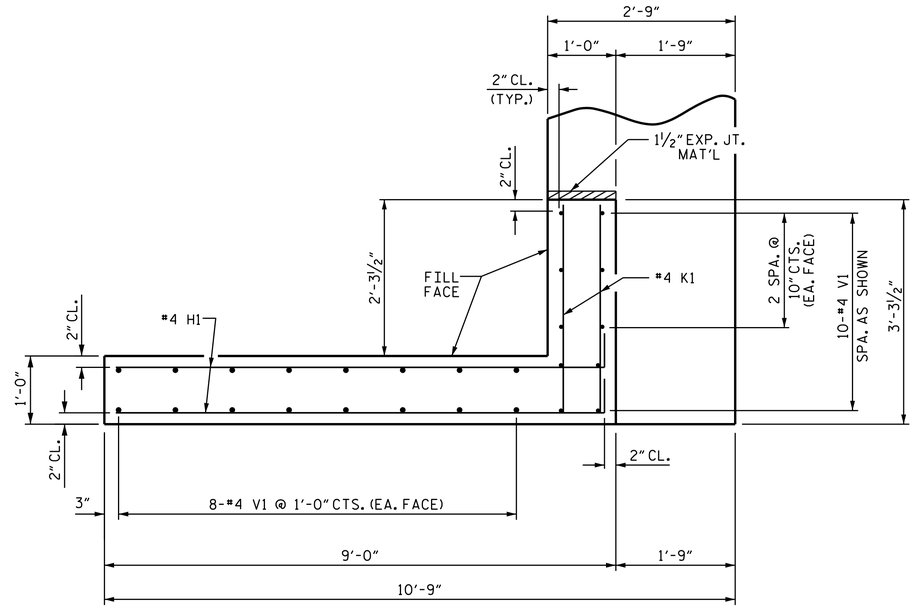

PLAN OF WING (W2)

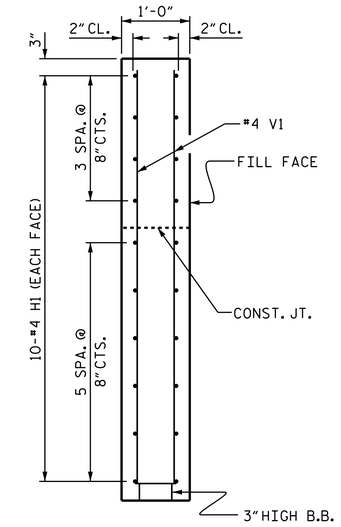

SECTION X-X

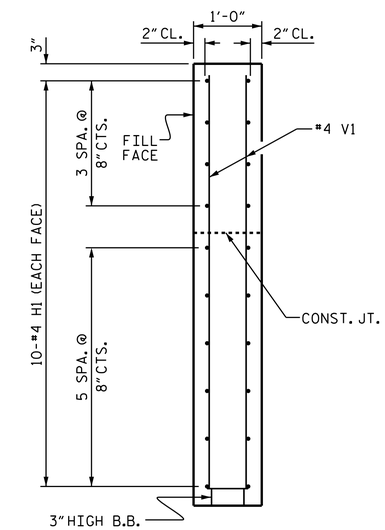

SECTION Y-Y

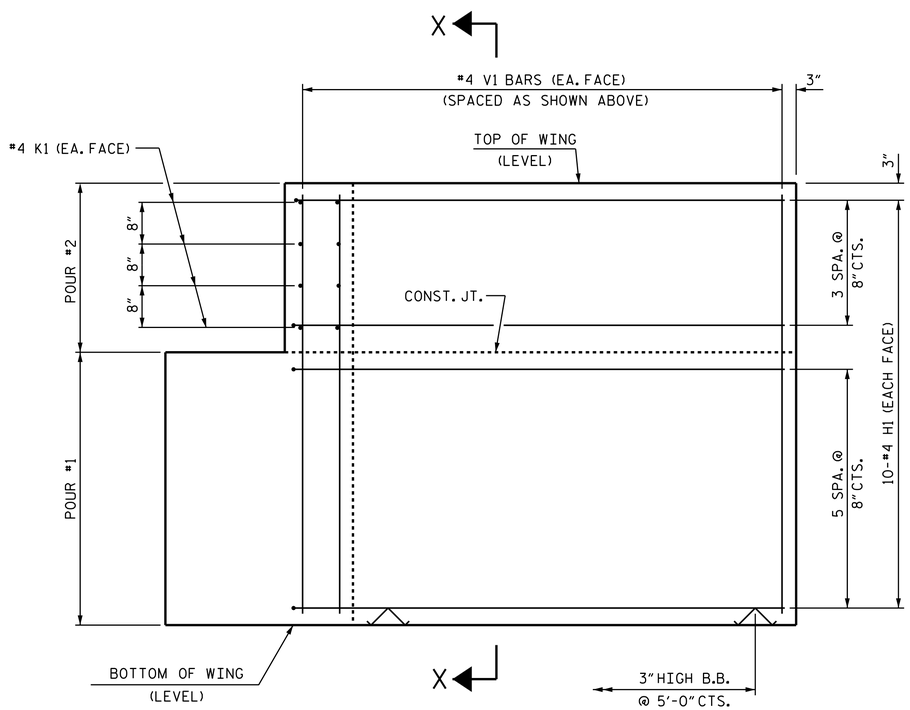

ELEVATION OF WING (W1)

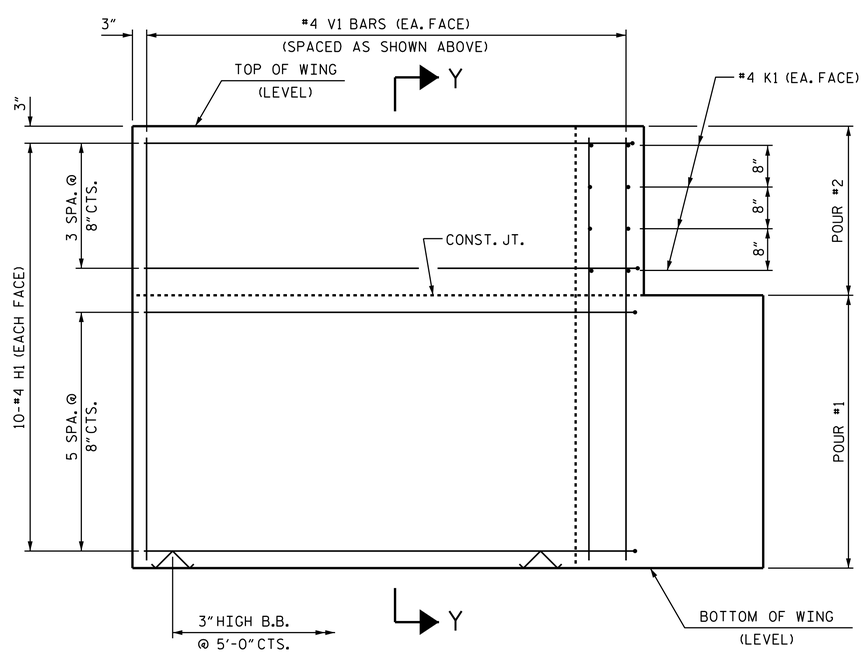

ELEVATION OF WING (W2)

WING DETAILS

3/5/2014

NORTH CAROLINA PROFESSIONAL SEAL 16301 ENGINEER TING HSIUNG FANG

DocuSigned by: Ting H. Fang
E72088400977435...

PROJECT NO. B-5164

MOORE COUNTY

STATION: 15+64.50 -L-

SHEET 3 OF 4

STATE OF NORTH CAROLINA
DEPARTMENT OF TRANSPORTATION
RALEIGH

SUBSTRUCTURE

END BENT
WING DETAILS

REVISIONS						SHEET NO.
NO.	BY:	DATE:	NO.	BY:	DATE:	S-15
1			3			TOTAL SHEETS
2			4			20

ASSEMBLED BY : Fr. Lea	DATE : 10-15-12	
CHECKED BY : E.I. OMILE	DATE : 10-29-12	
DRAWN BY : WJH 12/11		
CHECKED BY : AAC 12/11		

26-FEB-2014 10:14
K:\TIPProjects-B\B5164\Structures\Plans\FINAL PLANS\b5164_sd_cs.dgn
tjkirschbaum

STD. NO. EB_30_90S4