DocuSign Envelope ID: E6FE64D3-0D23-44A6-A9D5-3E2C1F8C7A40

ESTIMATED QUANTITIES		
BRIDGE @ STA. 15+64.50 -L-	RIP RAP CLASS II (2'-0" THICK)	GEOTEXTILE FOR DRAINAGE
	TONS	SQUARE YARDS
END BENT 1	170	190
END BENT 2	200	220

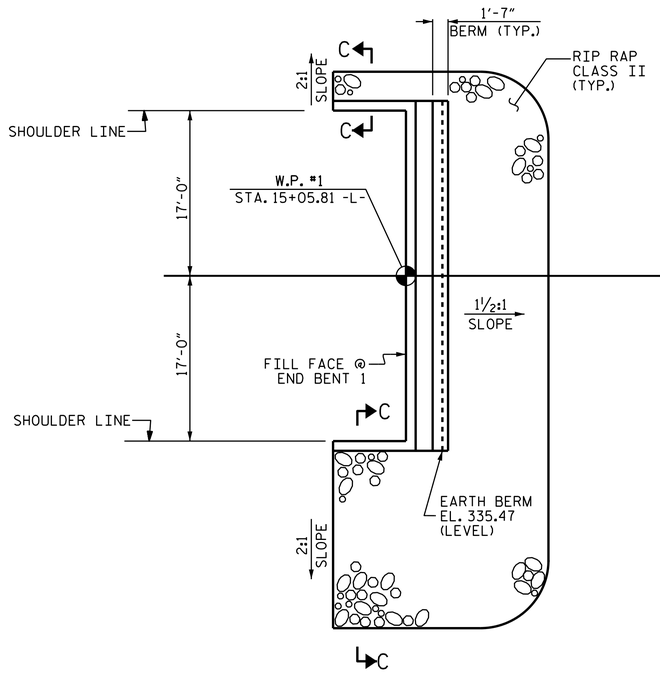

AT END BENT 1

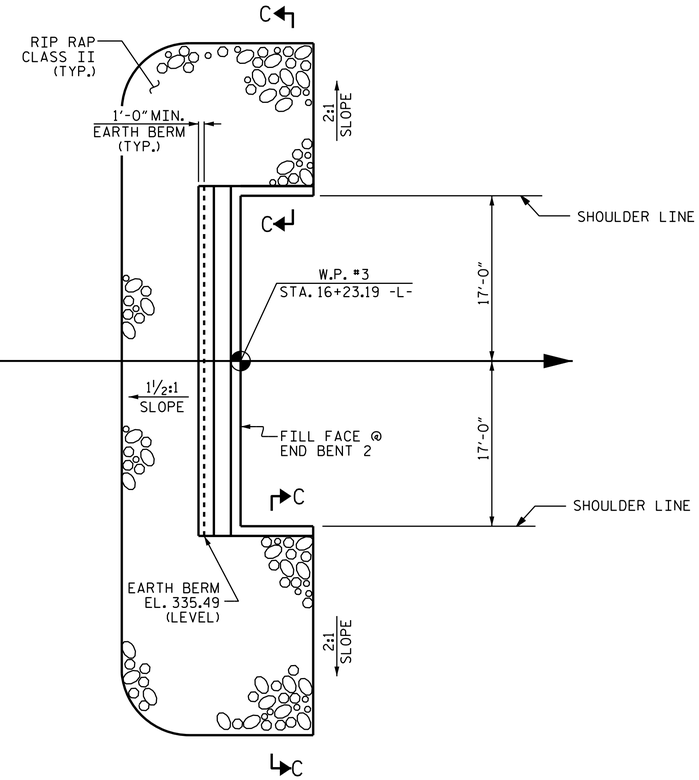

AT END BENT 2

PLAN

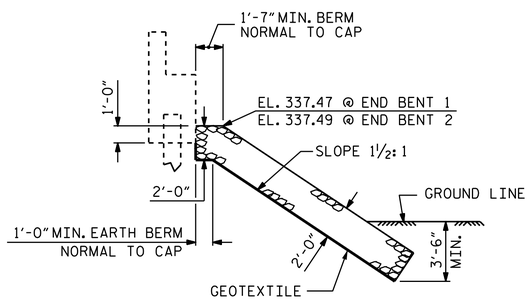

℄ SECTION
BERM RIP RAPPED

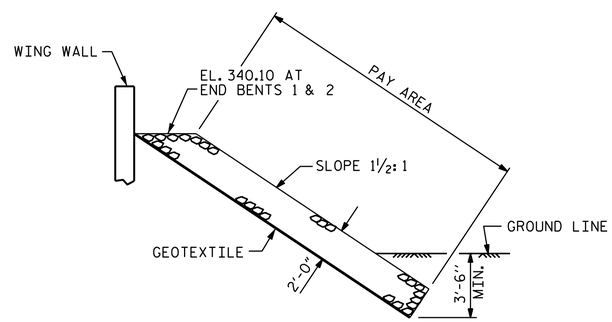

SECTION C-C

PROJECT NO. B-5164
MOORE COUNTY
STATION: 15+64.50 -L-

STATE OF NORTH CAROLINA
DEPARTMENT OF TRANSPORTATION
RALEIGH

STANDARD
RIP RAP DETAILS

3/5/2014

NORTH CAROLINA PROFESSIONAL SEAL 16301 ENGINEER TING-HSIUNG FANG

DocuSigned by: Ting-H. Fang
E72006A0977439...

REVISIONS						SHEET NO.
NO.	BY:	DATE:	NO.	BY:	DATE:	S-19
1			3			TOTAL SHEETS
2			4			20

ASSEMBLED BY :	Fr. Lea	DATE :	10-22-12
CHECKED BY :	E.I. OMILE	DATE :	10-29-12
DRAWN BY : REK 1/84	REV. 5/1/06R	TLA/GM	
CHECKED BY : RDU 1/84	REV. 10/1/11	MAA/GM	
	REV. 12/21/11	MAA/GM	

26-FEB-2014 10:14
K:\TIPProjects-B\B5164\Structures\Plans\FINAL PLANS\b5164_sd_cs.dgn
tjkirschbaum

STD. NO. RR1 (Sht 2)