DocuSign Envelope ID: E6FE64D3-0D23-44A6-A9D5-3E2C1F8C7A40

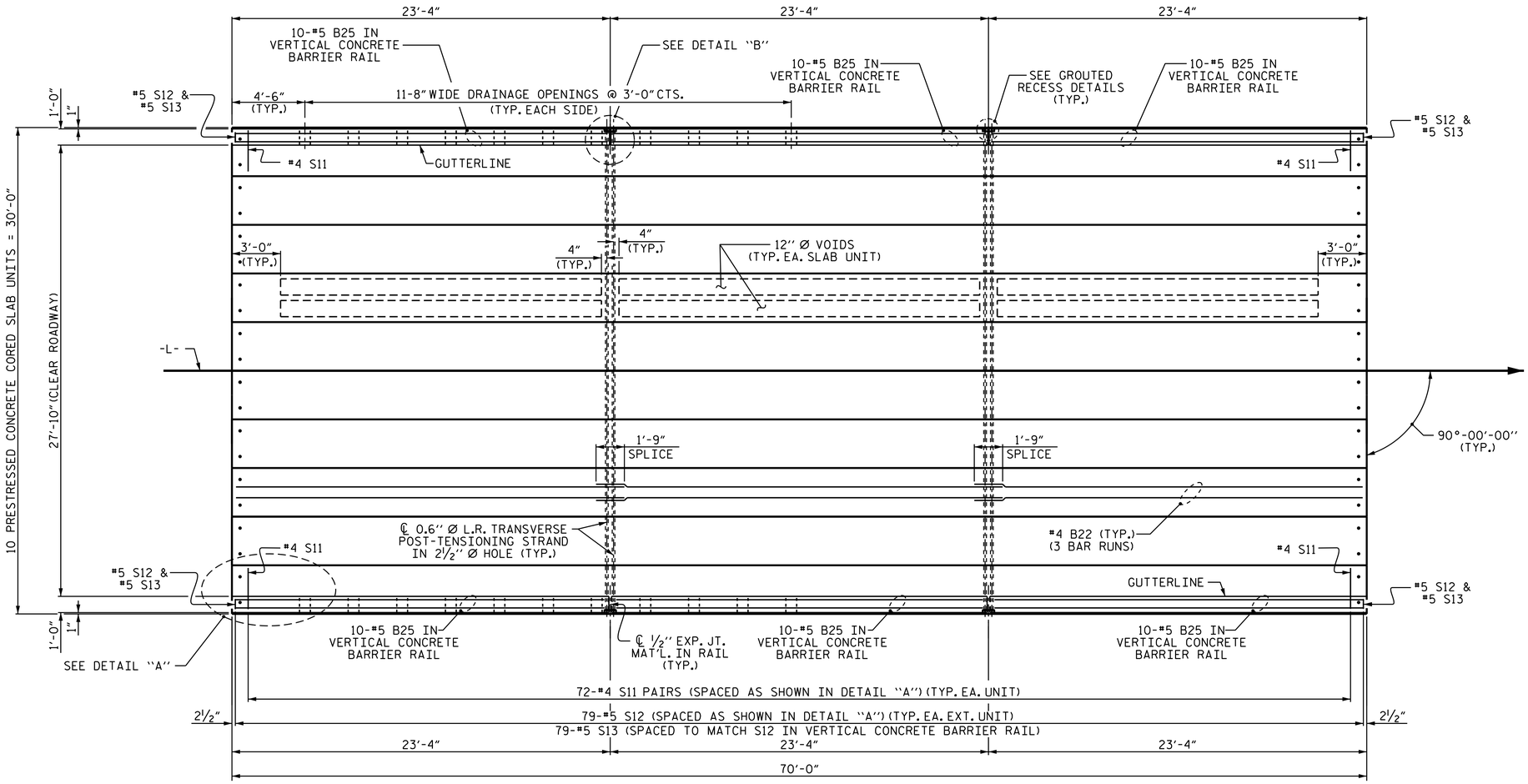

PLAN OF SPAN A

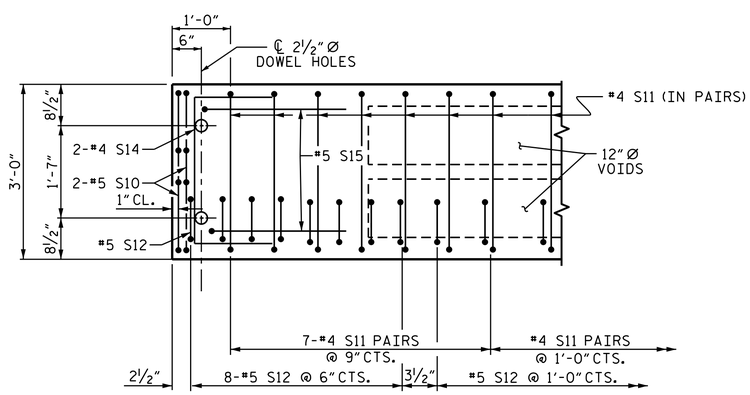

DETAIL "A"

NOTE: EXTERIOR UNIT SHOWN - INTERIOR UNIT SIMILAR EXCEPT OMIT #5 S12 BARS.

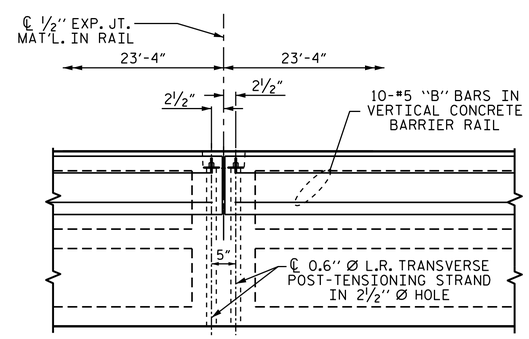

DETAIL "B"

#4 S11 BARS MAY BE SHIFTED AS NECESSARY TO MAINTAIN 1" CLEAR TO GROUTED RECESS AND 2½" Ø TRANSVERSE POST-TENSIONING STRAND HOLES

ASSEMBLED BY :	Fr. Lea	DATE :	10-15-12
CHECKED BY :	E.I. OMILE	DATE :	10-29-12
DRAWN BY : MAA	6/10	REV. 12/5/11	MAA/AAC
CHECKED BY : MKT	7/10		

26-FEB-2014 10:14
K:\TIPProjects-B\B5164\Structures\Plans\FINAL PLANS\b5164_sd_cs.dgn
tjkirschbaum

PROJECT NO. B-5164
MOORE COUNTY
STATION: 15+64.50 -L-

SHEET 3 OF 6

STATE OF NORTH CAROLINA
DEPARTMENT OF TRANSPORTATION
RALEIGH

PLAN OF 70' UNIT 27'-10" CLEAR ROADWAY 90° SKEW

SPAN A

3/5/2014

NORTH CAROLINA PROFESSIONAL SEAL 16301 ENGINEER TING-HSIUNG FANG

DocuSigned by: Ting-H. Fang
E7208840097743S...

REVISIONS							SHEET NO.
NO.	BY:	DATE:	NO.	BY:	DATE:		S-8
1			3				TOTAL SHEETS
2			4				20

STD. NO. 24PCS_30_90S_70L