DocuSign Envelope ID: E6FE64D3-0D23-44A6-A9D5-3E2C1F8C7A40

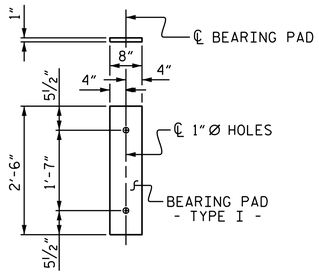

FIXED END
(TYPE I - 20 REQ'D)

ELASTOMERIC BEARING DETAILS

ELASTOMER IN ALL BEARINGS SHALL BE 60 DUROMETER HARDNESS.

CORED SLABS REQUIRED			
	NUMBER	LENGTH	TOTAL LENGTH
45' UNIT			
EXTERIOR C.S.	2	45'-0"	90'-0"
INTERIOR C.S.	8	45'-0"	360'-0"
TOTAL			450'-0"

CONCRETE RELEASE STRENGTH	
UNIT LENGTH	PSI
45'	4000

DEAD LOAD DEFLECTION AND CAMBER	
	3'-0" x 1'-9"
45' CORED SLAB UNIT	0.6" Ø L.R. STRAND
CAMBER (SLAB ALONE IN PLACE)	1¼' ↑
DEFLECTION DUE TO SUPERIMPOSED DEAD LOAD**	⅛" ↓
FINAL CAMBER	1⅛" ↑

** INCLUDES FUTURE WEARING SURFACE

GUTTERLINE ASPHALT THICKNESS & RAIL HEIGHT		
27'-10" CLEAR ROADWAY	ASPHALT OVERLAY THICKNESS	RAIL HEIGHT
	@ MID-SPAN	@ MID-SPAN
	NORMAL CROWN SECTION	
45' UNITS	2⅝"	3'-8⅞"

BAR TYPES

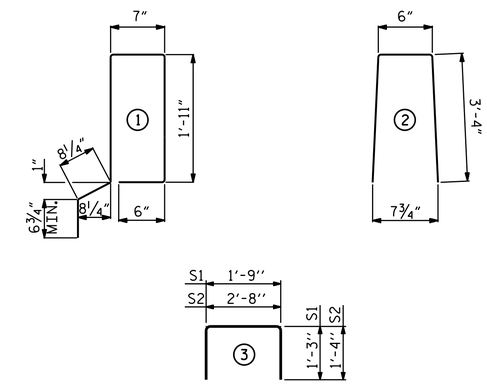

ALL BAR DIMENSIONS ARE OUT TO OUT

BILL OF MATERIAL FOR ONE 45' CORED SLAB UNIT

				EXTERIOR UNIT		INTERIOR UNIT	
BAR	NUMBER	SIZE	TYPE	LENGTH	WEIGHT	LENGTH	WEIGHT
B5	4	#4	STR	23'-3"	62	23'-3"	62
S1	8	#5	3	4'-3"	35	4'-3"	35
S2	94	#4	3	5'-4"	335	5'-4"	335
* S3	54	#5	1	6'-2"	347		
REINFORCING STEEL			LBS.		432		432
* EPOXY COATED REINFORCING STEEL			LBS.		347		
6500 P.S.I. CONCRETE			CU. YDS.		6.5		6.5
0.6" Ø L.R. STRANDS			No.		13		13

BILL OF MATERIAL FOR VERTICAL CONCRETE BARRIER RAIL

BAR	BARS PER PAIR OF EXTERIOR UNITS	TOTAL NO.	SIZE	TYPE	LENGTH	WEIGHT
	45' UNIT					
*B12	40	40	#5	STR	22'-1"	921
* S4	108	108	#5	2	7'-2"	807
* EPOXY COATED REINFORCING STEEL				LBS.		1728
CLASS AA CONCRETE				CU.YDS.		11.8
TOTAL VERTICAL CONCRETE BARRIER RAIL				LN. FT.		90.125

NOTES

ALL PRESTRESSING STRANDS SHALL BE 7-WIRE LOW RELAXATION GRADE 270 STRANDS AND SHALL CONFORM TO AASHTO M203 EXCEPT FOR SAMPLING REQUIREMENTS WHICH SHALL BE IN ACCORDANCE WITH THE STANDARD SPECIFICATIONS.

ALL REINFORCING STEEL CAST WITH THE CORED SLAB SECTIONS SHALL BE GRADE 60 AND SHALL BE INCLUDED IN THE UNIT PRICE BID FOR PRESTRESSED CONCRETE CORED SLABS.

RECESSES FOR TRANSVERSE STRANDS SHALL BE GROUTED AFTER THE TENSIONING OF THE STRANDS.

THE 2½" Ø DOWEL HOLES AT FIXED ENDS OF SLAB SECTIONS SHALL BE FILLED WITH NON-SHRINK GROUT.

THE BACKER RODS SHALL CONFORM TO THE REQUIREMENTS OF TYPE M BOND BREAKER. SEE SECTION 1028 OF THE STANDARD SPECIFICATIONS.

WHEN CORED SLABS ARE CAST, AN INTERNAL HOLD-DOWN SYSTEM SHALL BE EMPLOYED TO PREVENT VOIDS FROM RISING OR MOVING SIDEWAYS. AT LEAST SIX WEEKS PRIOR TO CASTING CORED SLABS, THE CONTRACTOR SHALL SUBMIT TO THE ENGINEER FOR REVIEW AND COMMENT, DETAILED DRAWINGS OF THE PROPOSED HOLD-DOWN SYSTEM. IN ADDITION TO STRUCTURAL DETAILS, LOCATION AND SPACING OF THE HOLD-DOWNS SHALL BE INDICATED.

ALL REINFORCING STEEL IN THE VERTICAL CONCRETE BARRIER RAIL SHALL BE EPOXY COATED.

PRESTRESSING STRANDS SHALL BE CUT FLUSH WITH THE CORED SLAB UNIT ENDS.

APPLY EPOXY PROTECTIVE COATING TO CORED SLAB UNIT ENDS AND EXTERIOR FACE OF THE EXTERIOR CORED SLAB UNITS THAT REQUIRE DRAINS IN THE BARRIER RAIL.

THE DRAIN OPENING AT THE GUTTERLINE SHALL BE 8" WIDE AND HEIGHT VARIES. THE HEIGHT OF THE OPENING IN THE VERTICAL CONCRETE BARRIER RAIL SHALL EXTEND FROM THE TOP OF THE ASPHALT OVERLAY TO THE TOP OF THE DRAIN OPENING.

THE BOTTOM TWO #5 B12 BARS IN THE VERTICAL CONCRETE BARRIER RAIL MAY BE FIELD CUT TO AVOID DRAINS.

GROOVED CONTRACTION JOINTS, ½" IN DEPTH, SHALL BE TOOLED IN ALL EXPOSED FACES OF THE BARRIER RAIL AND IN ACCORDANCE WITH ARTICLE 825-10(B) OF THE STANDARD SPECIFICATIONS. A CONTRACTION JOINT SHALL BE LOCATED AT EACH THIRD POINT BETWEEN BARRIER RAIL EXPANSION JOINTS. ONLY ONE CONTRACTION JOINT IS REQUIRED AT MIDPOINT OF BARRIER RAIL SEGMENTS LESS THAN 20 FEET IN LENGTH AND NO CONTRACTION JOINTS ARE REQUIRED FOR THOSE SEGMENTS LESS THAN 10 FEET IN LENGTH.

TRANSVERSE POST TENSIONING OF THE CORED SLAB UNITS SHALL BE DONE IN ACCORDANCE WITH THE STANDARD SPECIFICATIONS.

THE TRANSFER OF LOAD FROM THE ANCHORAGES TO THE CORED SLAB UNIT SHALL BE DONE WHEN THE CONCRETE HAS REACHED A COMPRESSIVE STRENGTH OF NOT LESS THAN THE REQUIRED STRENGTH SHOWN IN THE "CONCRETE RELEASE STRENGTH" TABLE.

FOR GROUT FOR STRUCTURES, SEE SPECIAL PROVISIONS.

GRADE 270 STRANDS	
	0.6" Ø L.R.
AREA (SQUARE INCHES)	0.217
ULTIMATE STRENGTH (LBS. PER STRAND)	58,600
APPLIED PRESTRESS (LBS. PER STRAND)	43,950

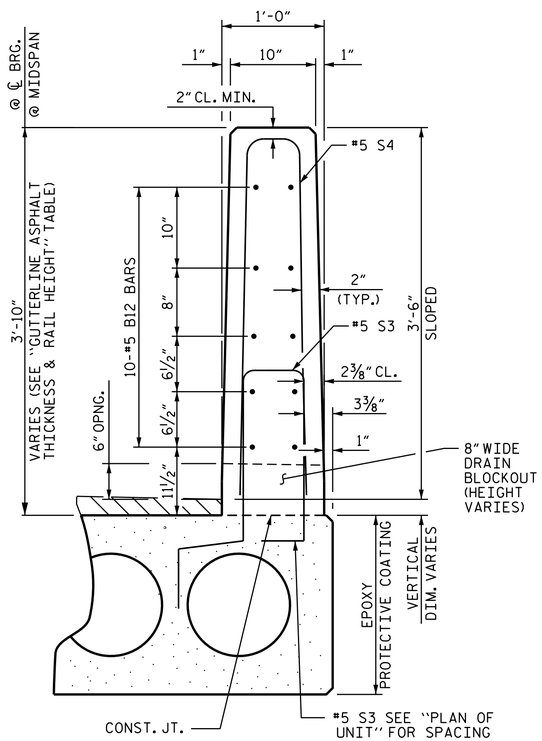

VERTICAL CONCRETE BARRIER RAIL SECTION

FOR "EXPANSION JOINTS DETAILS" SEE SHEET S-10

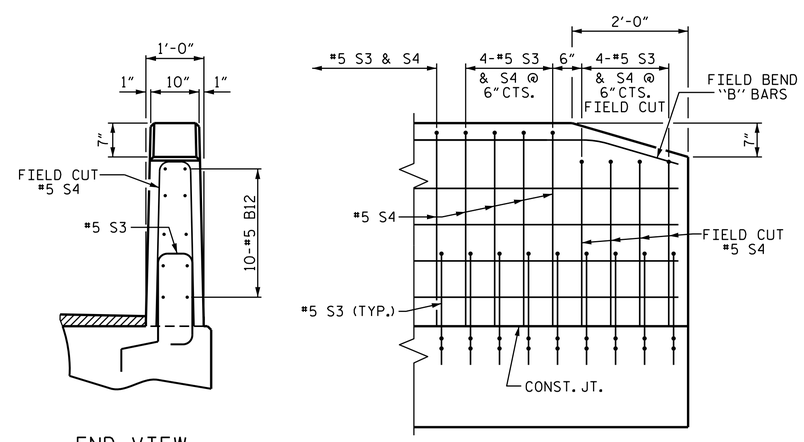

END VIEW

SIDE VIEW

END OF RAIL DETAILS

END BENT 2 SHOWN, END BENT 1 SIMILAR

PROJECT NO. B-5164

MOORE COUNTY

STATION: 15+64.50 -L-

SHEET 6 OF 6

STATE OF NORTH CAROLINA
DEPARTMENT OF TRANSPORTATION
RALEIGH

STANDARD
3'-0" X 1'-9"
PRESTRESSED CONCRETE
CORED SLAB UNIT
90° SKEW
SPAN B

3/5/2014

NORTH CAROLINA PROFESSIONAL SEAL 16301 ENGINEER TING-HSIUNG FANG

DocuSigned by: Ting H. Fang
E72088A0077436...

REVISIONS						SHEET NO.
NO.	BY:	DATE:	NO.	BY:	DATE:	S-11
1			3			TOTAL SHEETS
2			4			20

ASSEMBLED BY : Fr. Lea		DATE : 10-15-12	
CHECKED BY : E.I. OMILE		DATE : 10-29-12	
DRAWN BY : DGE 5/09	REV. 12/11	MAA/AAC	
CHECKED BY : BCH 6/09			

26-FEB-2014 10:14
K:\TIPProjects-B\B5164\Structures\Plans\FINAL PLANS\b5164_sd_cs.dgn
tjkirschbaum

STD. NO. 21" PCS3_30_90S