DocuSign Envelope ID: E6FE64D3-0D23-44A6-A9D5-3E2C1F8C7A40

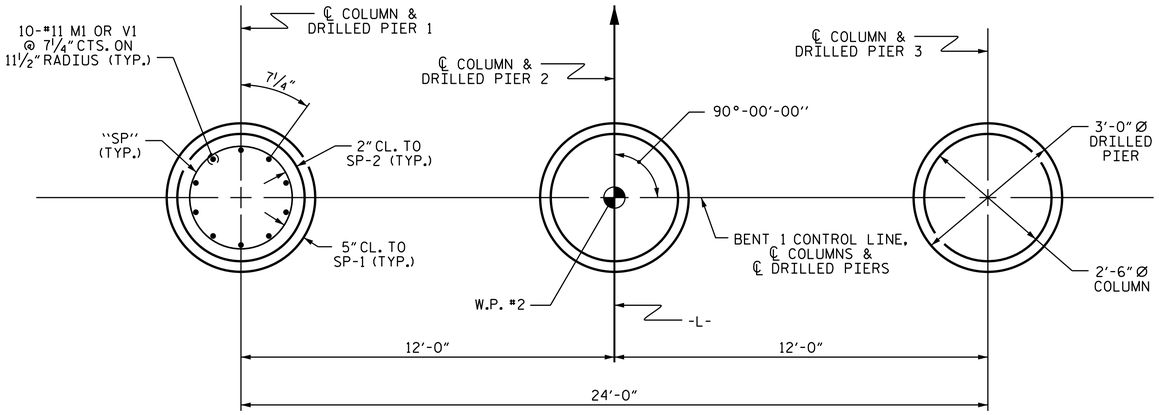

PLAN OF DRILLED PIERS & COLUMNS

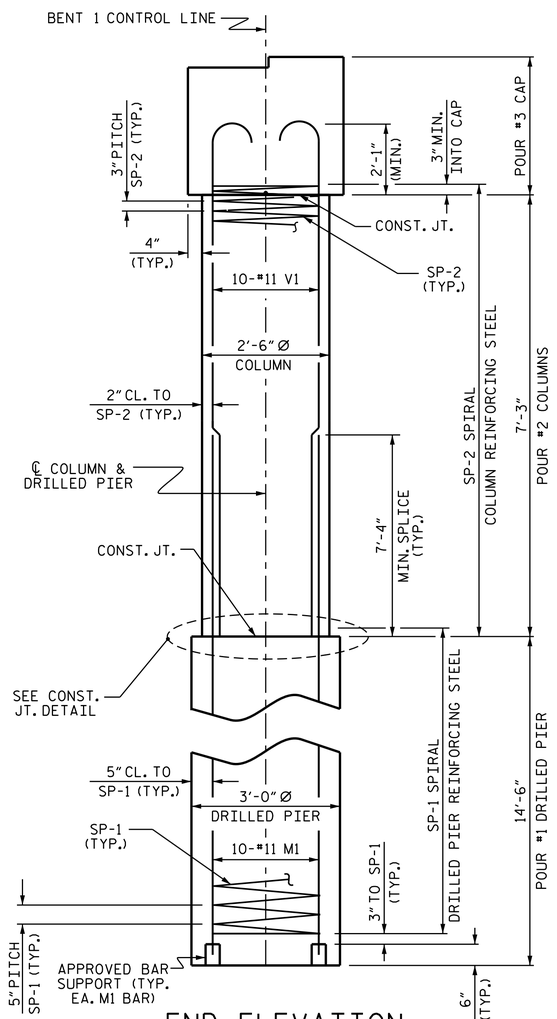

END ELEVATION

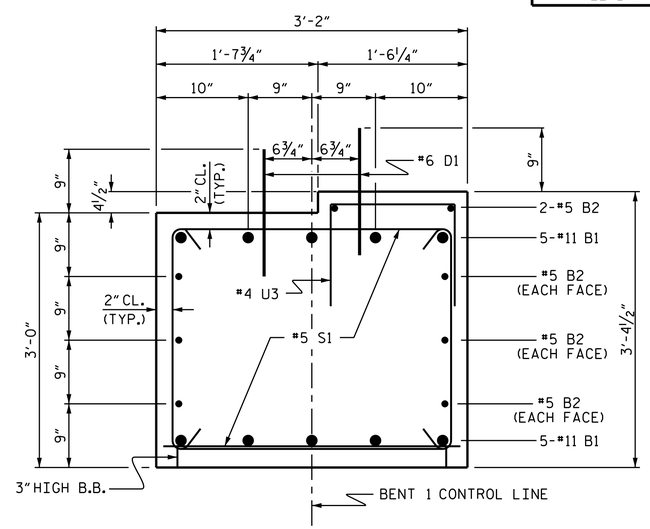

SECTION THRU CAP

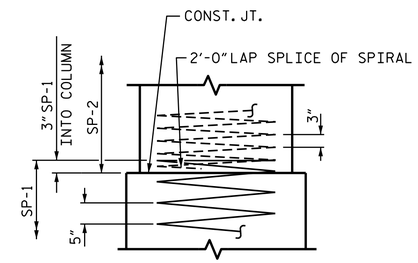

CONSTRUCTION JOINT DETAIL

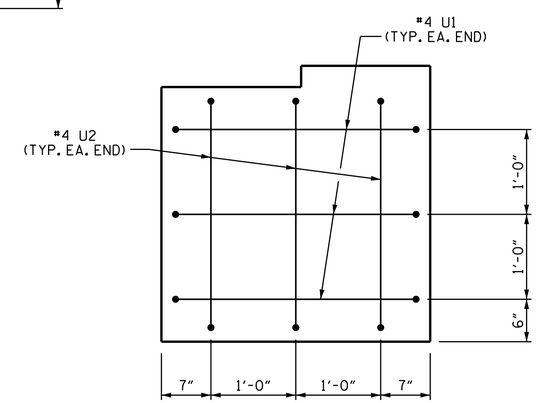

END OF CAP VIEW

(TYPICAL BOTH ENDS)

BAR TYPES

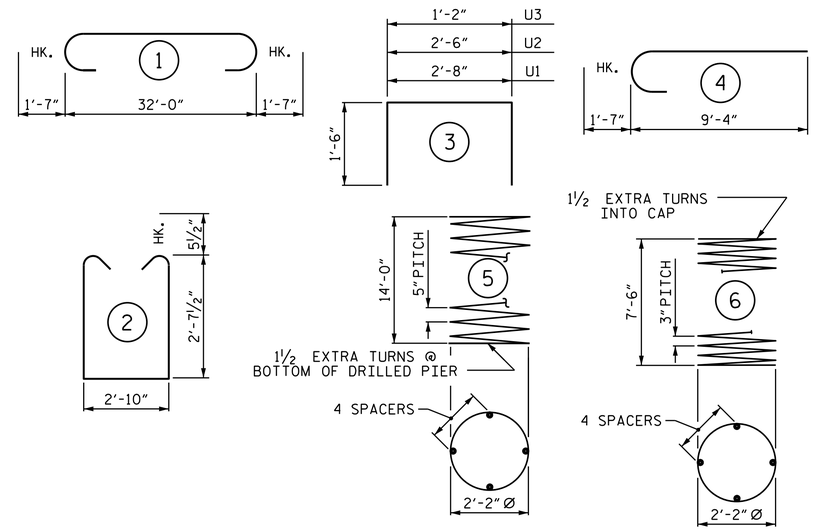

ALL BAR DIMENSIONS ARE OUT TO OUT

BILL OF MATERIAL

BENT 1

BAR	NO.	SIZE	TYPE	LENGTH	WEIGHT
B1	10	#11	1	35'-2"	1868
B2	8	#5	STR	32'-2"	268
D1	40	#6	STR	1'-6"	90
M1	30	#11	STR	24'-7"	3918
S1	52	#5	2	9'-0"	488
U1	6	#4	3	5'-8"	23
U2	6	#4	3	5'-6"	22
U3	22	#4	3	4'-2"	61
V1	30	#11	4	10'-11"	1740
REINFORCING STEEL					8,478 LBS.
SP-1	3	✳	5	239'-0"	748
SP-2	3	✳✳	6	215'-3"	431
SPIRAL COLUMN REINFORCING STEEL					1,179 LBS.

✳ THE SP-1 SPIRAL REINFORCING STEEL SHALL BE W31 OR D-31 COLD DRAWN WIRE OR #5 PLAIN OR DEFORMED BAR

✳✳ THE SP-2 SPIRAL REINFORCING STEEL SHALL BE W20 OR D-20 COLD DRAWN WIRE OR #4 PLAIN OR DEFORMED BAR

CLASS A CONCRETE BREAKDOWN

POUR #2 (COLUMNS)	4.0 C.Y.
POUR #3 (CAP)	12.1 C.Y.
TOTAL CLASS A CONCRETE	16.1 C.Y.

DRILLED PIERS:

DRILLED PIER CONCRETE POUR #1 (DRILLED PIERS)	11.4 C.Y.
3'-0" Ø DRILLED PIER NOT IN SOIL	20 LIN. FT.
3'-0" Ø DRILLED PIER IN SOIL	23.5 LIN. FT.
PERMANENT STEEL CASING FOR 3'-0" Ø DRILLED PIER	18.0 LIN. FT.
CSL TUBES	192 LIN. FT.

PROJECT NO. B-5164

MOORE COUNTY

STATION: 15+64.50 -L-

SHEET 2 OF 2

STATE OF NORTH CAROLINA
DEPARTMENT OF TRANSPORTATION
RALEIGH

SUBSTRUCTURE

BENT 1

3/5/2014

NORTH CAROLINA PROFESSIONAL SEAL 16301 ENGINEER INC. HSILUNG FANG

DocuSigned by:
E72088400977435...

ASSEMBLED BY : Fr. Lea	DATE : 10-16-12		
CHECKED BY : E.I. OMILE	DATE : 10-29-12		
DRAWN BY : DGE 03/10			
CHECKED BY : MKT 03/10			

REVISIONS						SHEET NO.
NO.	BY:	DATE:	NO.	BY:	DATE:	S-18
1			3			TOTAL SHEETS
2			4			20

26-FEB-2014 10:14
K:\TIPProjects-B\B5164\Structures\Plans\FINAL PLANS\b5164_sd_cs.dgn
tjkirschbaum

STD. NO. DP_BT_30_90S_<50'