R-2707B

CONTRACT: C203201

STATE	STATE PROJECT REFERENCE NO.	SHEET NO.	TOTAL SHEETS
N.C.	R-2707B		

STATE PROJ. NO.	F.A. PROJ. NO.	DESCRIPTION
34497.1.2	NHF-0074(14)	P.E.
34497.2.8	NHF—0074(107)	ROW
34497.3.FS5	NHF—0074(107)	CONST.

STATE OF NORTH CAROLINA
DIVISION OF HIGHWAYS

CLEVELAND COUNTY

LOCATION: ***US 74 – Shelby Bypass from West of (SR 1314) Artee Rd. to East of NC 226***

TYPE OF WORK: ***Grading, Drainage, -Y- Line Paving & Structures***

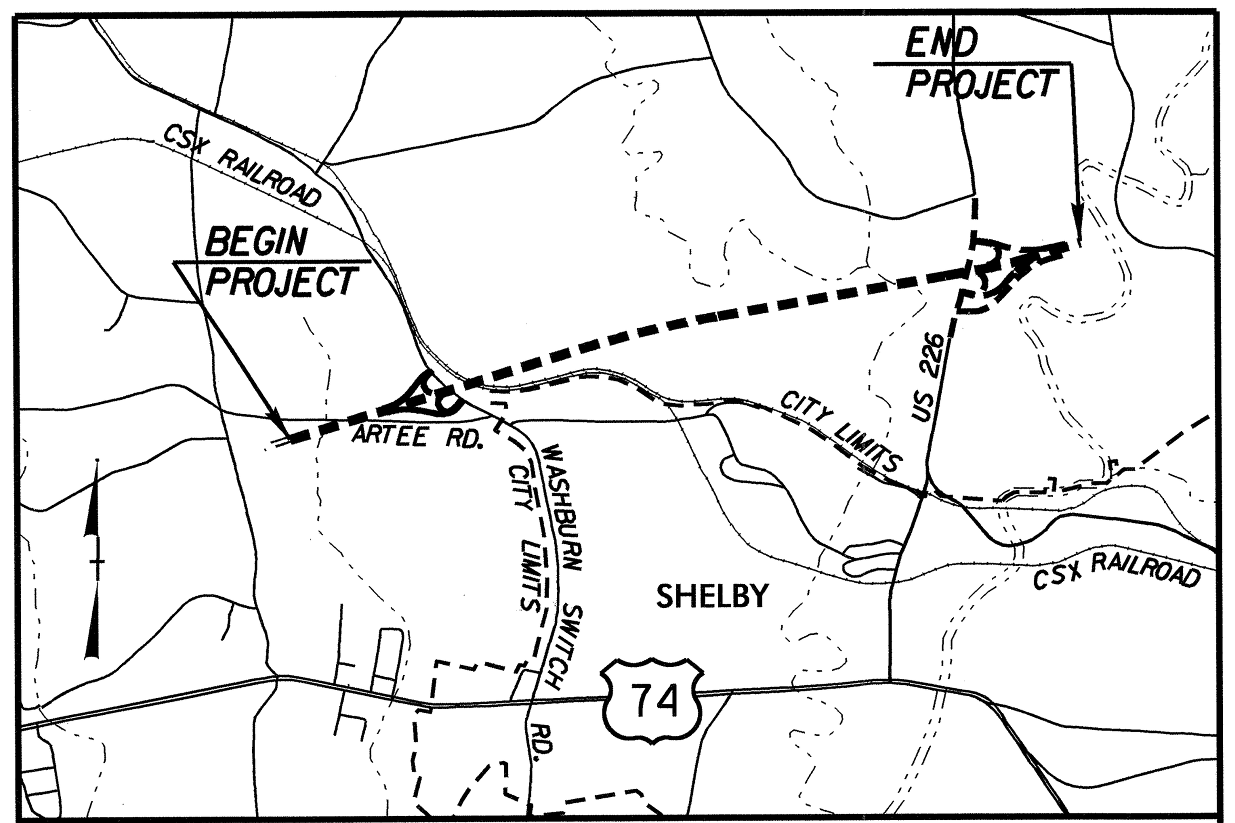

VICINITY MAP

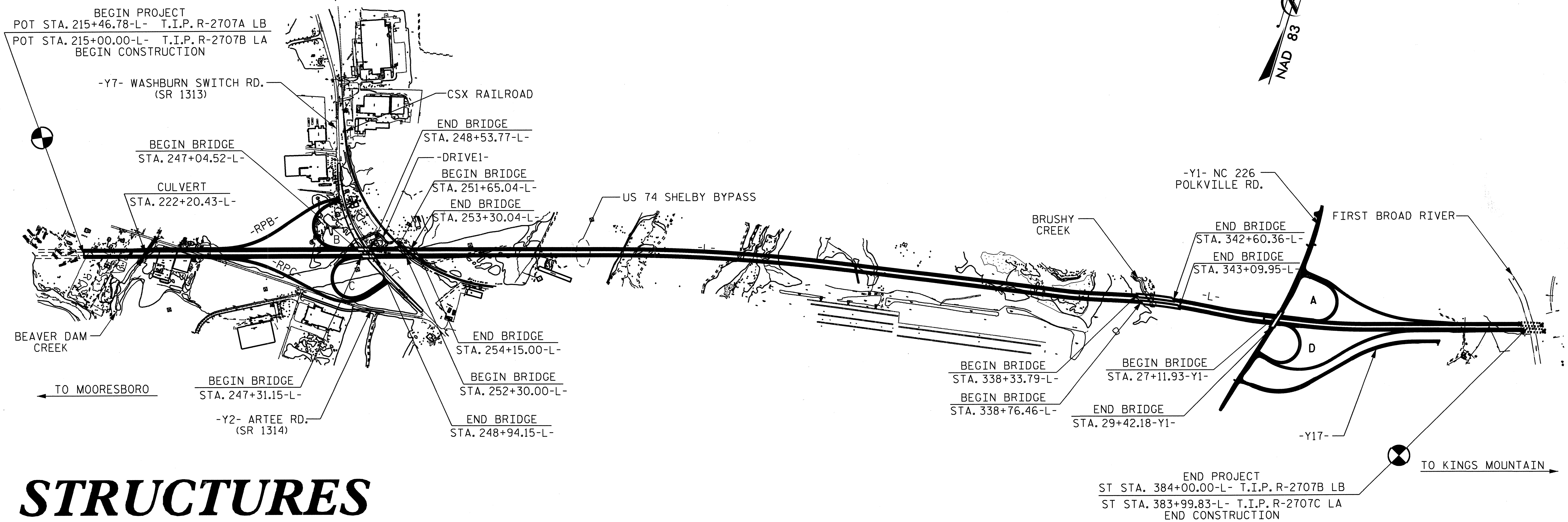

STRUCTURES

DESIGN DATA

ADT 2013 = 19,400
ADT 2033 = 31,100
DHV = 10%
D = 60%
T = 12%
V = 70 MPH
* (DUAL = 5% + TTST = 7%)

PROJECT LENGTH

LENGTH OF ROADWAY TIP PROJECT R–2707B =	3.178 mi.
LENGTH OF STRUCTURES TIP PROJECT R–2707B =	0.145 mi.
TOTAL LENGTH OF TIP PROJECT R–2707B =	3.323 mi.

Prepared In the Office of:

DIVISION OF HIGHWAYS
1000 Birch Ridge Dr., Raleigh NC, 27610

2012 STANDARD SPECIFICATIONS

LETTING DATE:
MAY 20, 2014

QUANG NGUYEN, P.E.
PROJECT ENGINEER

B. D. KLAPPENBACH, PE
ROADWAY DESIGN ENGINEER

STRUCTURE MANAGEMENT UNIT

DIVISION OF HIGHWAYS
STATE OF NORTH CAROLINA

P.E.
STATE DESIGN ENGINEER

DEPARTMENT OF TRANSPORTATION
FEDERAL HIGHWAY ADMINISTRATION

APPROVED
DIVISION ADMINISTRATOR *DATE*

09/08/99
27-JUN-2013 13:04
$$$$$$$$$$$$DGN$$$$$$$$$$$$$$$$$$
bklappenbach

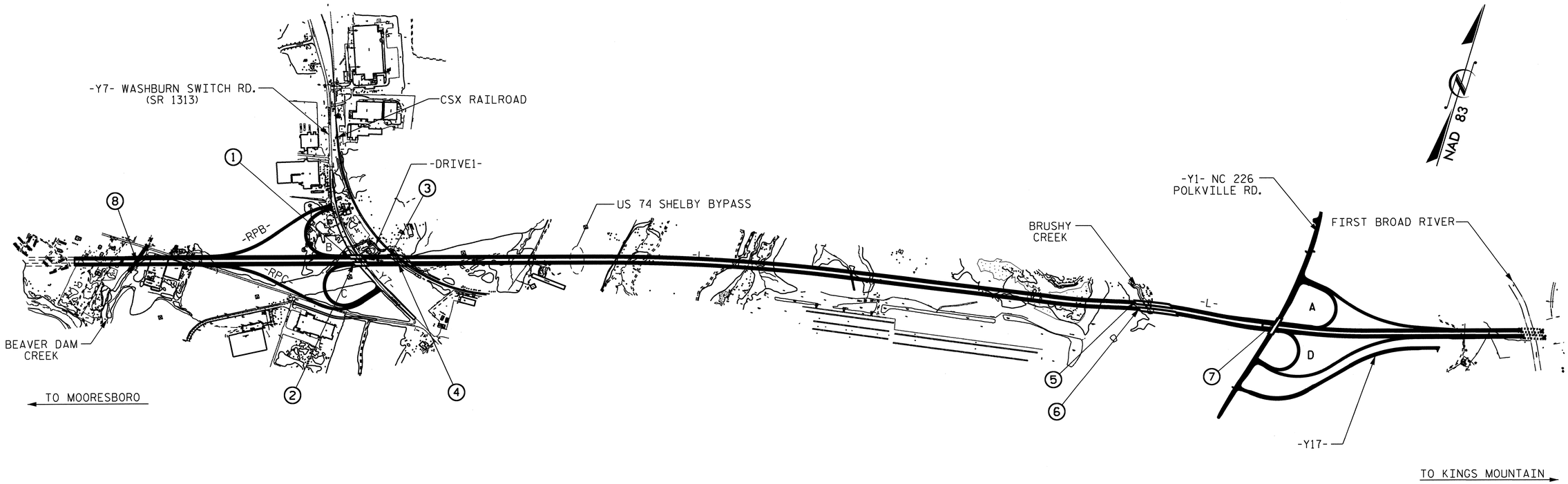

INDEX

STR. No.	STATION	DESCRIPTION	SHEETS
1	247+90.66-L- (LEFT LANE)	BRIDGE ON US 74 OVER SR 1313	S-1 THRU S-33
2	247+90.66-L- (RIGHT LANE)	BRIDGE ON US 74 OVER SR 1313	S-34 THRU S-66
3	252+73.29-L- (LEFT LANE)	BRIDGE ON US 74 OVER CSX RAILROAD	S-67 THRU S-95
4	252+73.29-L- (RIGHT LANE)	BRIDGE ON US 74 OVER CSX RAILROAD	S-96 THRU S-125
5	340+70.00-L- (LEFT LANE)	BRIDGE ON US 74 OVER BUSHY CREEK	S-126 THRU S-176
6	340+70.00-L- (RIGHT LANE)	BRIDGE ON US 74 OVER BUSHY CREEK	S-177 THRU S-227
7	345+83.22-L-	BRIDGE ON NC 266 OVER US 74	S-228 THRU S-266
8	222+20.43-L-	DOUBLE 10 FT. X 10 FT. RCBC	C-1 THRU C-5
N/A	VARIES	RETAINING WALLS	W-1 THRU W-3

PROJECT NO. R-2707B
CLEVELAND COUNTY
STATION:

STATE OF NORTH CAROLINA
DEPARTMENT OF TRANSPORTATION
RALEIGH

INDEX

REVISIONS						
NO.	BY:	DATE:	NO.	BY:	DATE:	
1			3			
2			4			

DRAWN BY : H. T. BARBOUR DATE : 10-23-12
CHECKED BY : B. D. KLAPPENBACH DATE : 5-13

27-JUN-2013 09:01
K:\Structures\Plans\Bailey\STRland2\R-2707B_SD_TSH.dgn
tbarbour

F.A. PROJECT NO. NHF-74(107)

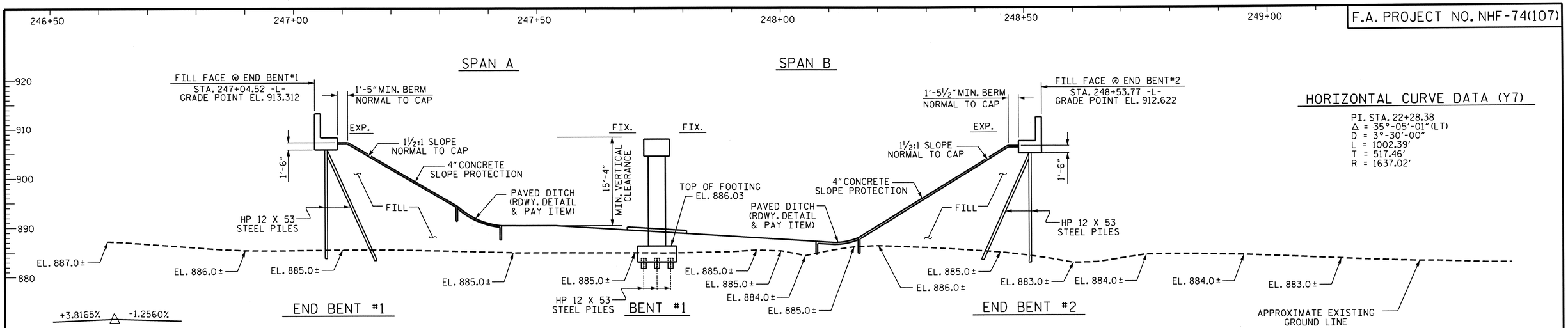

SECTION ALONG CONTROL LINE (LEFT LANE)

(SECTION TAKEN AT RIGHT ANGLES TO BENTS AND END BENTS)

HORIZONTAL CURVE DATA (Y7)

PI. STA. 22+28.38
Δ = 35°-05'-01" (LT)
D = 3°-30'-00"
L = 1002.39'
T = 517.46'
R = 1637.02'

+3.8165% △ -1.2560%

P. I. = 242+50.00 -L-
EL. = 920.66
V. C. = 1540'

GRADE DATA -L-

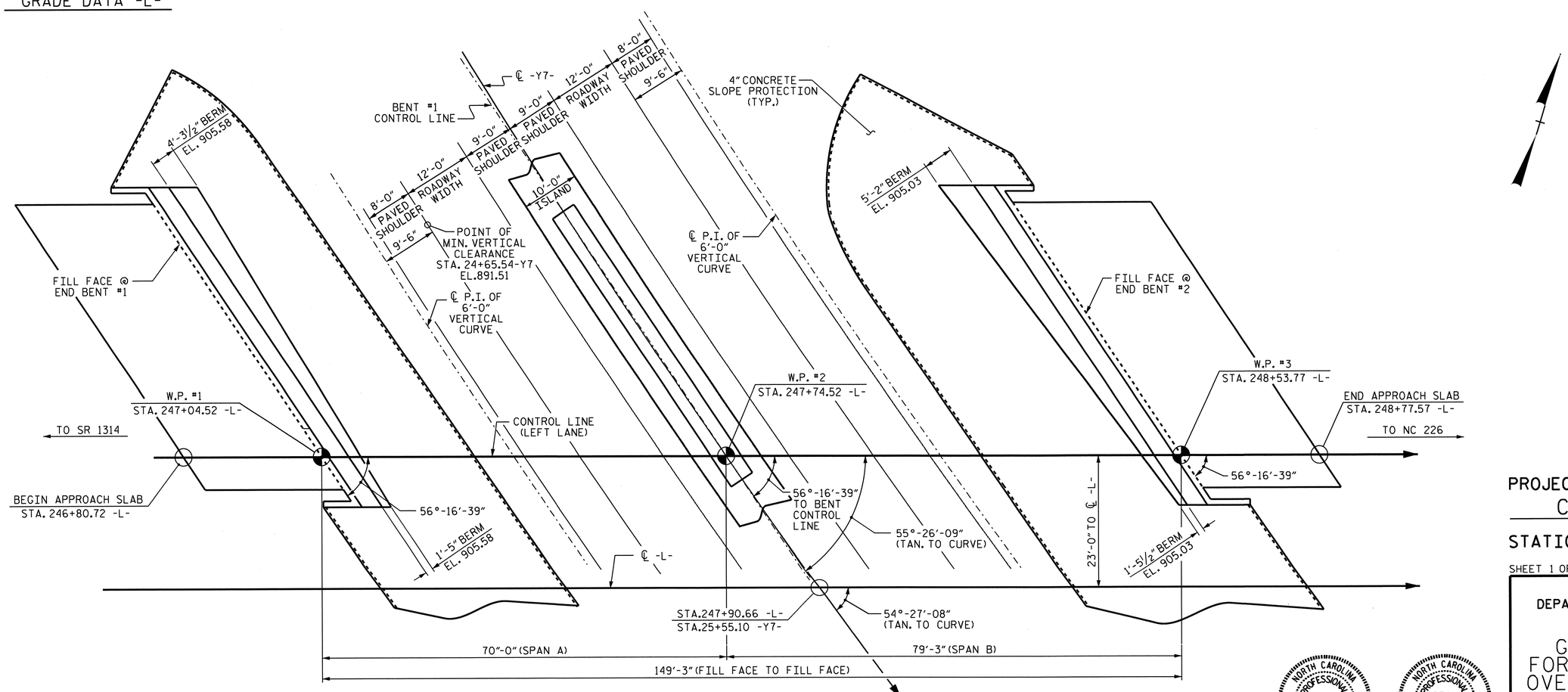

PLAN (LEFT LANE)

(PILES NOT SHOWN IN PLAN VIEW)

PROJECT NO. R-2707B
CLEVELAND COUNTY
STATION: 247+90.66 -L-
25+55.10 -Y7-

SHEET 1 OF 3

BRIDGE No. 457

STATE OF NORTH CAROLINA
DEPARTMENT OF TRANSPORTATION
RALEIGH

GENERAL DRAWING FOR BRIDGE ON US 74 OVER SR 1313 BETWEEN SR 1314 AND NC 226 (LEFT LANE)

NORTH CAROLINA PROFESSIONAL SEAL 13014 ENGINEER QUANG H. NGUYEN
Quang H. Nguyen 6-27-13

NORTH CAROLINA PROFESSIONAL SEAL 15825 BRIDGE ENGINEER D. K. APPLEBACH
6-27-2013

REVISIONS						SHEET NO.
NO.	BY:	DATE:	NO.	BY:	DATE:	S-1
1			3			TOTAL SHEETS
2			4			266

DRAWN BY :	H. T. BARBOUR	DATE :	05-07-12
CHECKED BY :	D. A. GLADDEN	DATE :	12-12
DESIGN ENGINEER OF RECORD:	S. T. CHAMPION	DATE :	5-13

24-JUN-2013 08:00
K:\Structures\Plans\Bailey\STRland2\tbarbour\Microstation\str-1\R-2707B_SD_GD.dgn
tbarbour

STR #1

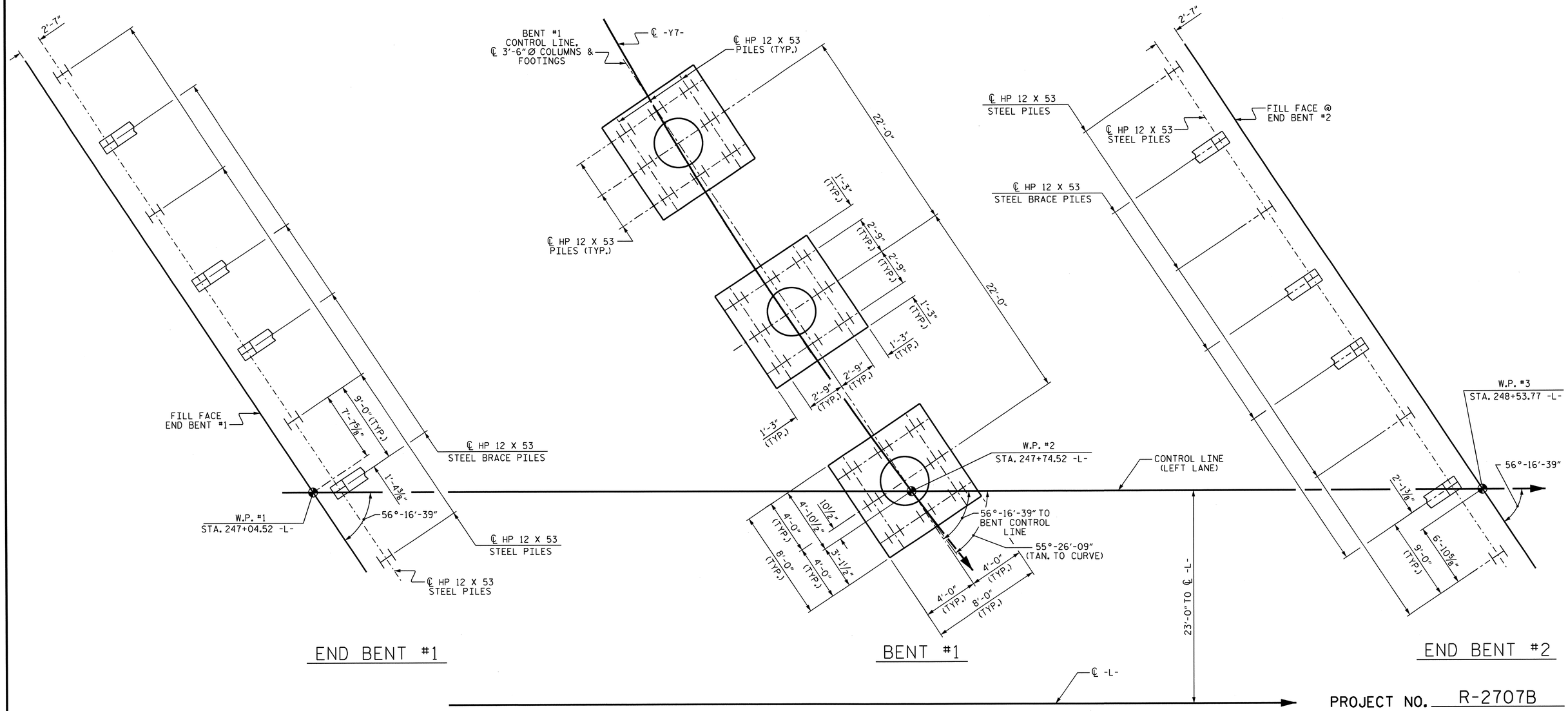

FOUNDATION LAYOUT

PROJECT NO. R-2707B

CLEVELAND COUNTY

STATION: 247+90.66 -L-

SHEET 2 OF 3

NOTES

FOR PILES, SEE SECTION 450 OF THE STANDARD SPECIFICATIONS.

TESTING THE PILES WITH THE PDA DURING DRIVING, RESTRIKING OR REDRIVING MAY BE REQUIRED. THE ENGINEER WILL DETERMINE THE NEED FOR PDA TESTING. FOR PDA TESTING, SEE SECTION 450 OF THE STANDARD SPECIFICATIONS.

PILES AT END BENT NO. 1 ARE DESIGNED FOR A FACTORED RESISTANCE OF 100 TONS PER PILE.

DRIVE PILES AT END BENT NO. 1 TO A REQUIRED DRIVING RESISTANCE OF 167 TONS PER PILE.

PILES AT BENT NO. 1 ARE DESIGNED FOR A FACTORED RESISTANCE OF 85 TONS PER PILE.

DRIVE PILES AT BENT NO. 1 TO A REQUIRED DRIVING RESISTANCE OF 142 TONS PER PILE.

PILES AT END BENT NO. 2 ARE DESIGNED FOR A FACTORED RESISTANCE OF 105 TONS PER PILE.

DRIVE PILES AT END BENT NO. 2 TO A REQUIRED DRIVING RESISTANCE OF 175 TONS PER PILE.

NORTH CAROLINA PROFESSIONAL SEAL 15825 ENGINEER D. L. KLAPPENBACH
6-27-2013

STATE OF NORTH CAROLINA
DEPARTMENT OF TRANSPORTATION
RALEIGH

GENERAL DRAWING FOR BRIDGE ON US 74 OVER SR 1313 BETWEEN SR 1314 AND NC 226 (LEFT LANE)

REVISIONS						SHEET NO.
NO.	BY:	DATE:	NO.	BY:	DATE:	S-2
1			3			TOTAL SHEETS
2			4			266

DRAWN BY :	H. T. BARBOUR	DATE :	05-08-12
CHECKED BY :	D. A. GLADDEN	DATE :	12-12
DESIGN ENGINEER OF RECORD:	S. T. CHAMPION	DATE :	5-13

24-JUN-2013 08:01
K:\Structures\Plans\Bailey\STRland2\tbarbour\Microstation\str-1\R-2707B_SD_GD.dgn
tbarbour

STR. #1

BENCHMARK #10-8'' NAIL IN ROOT OF 18''Ø WHITE PINE 91.16' LEFT OF STA. 249+98.11 -L-, EL. 881.23

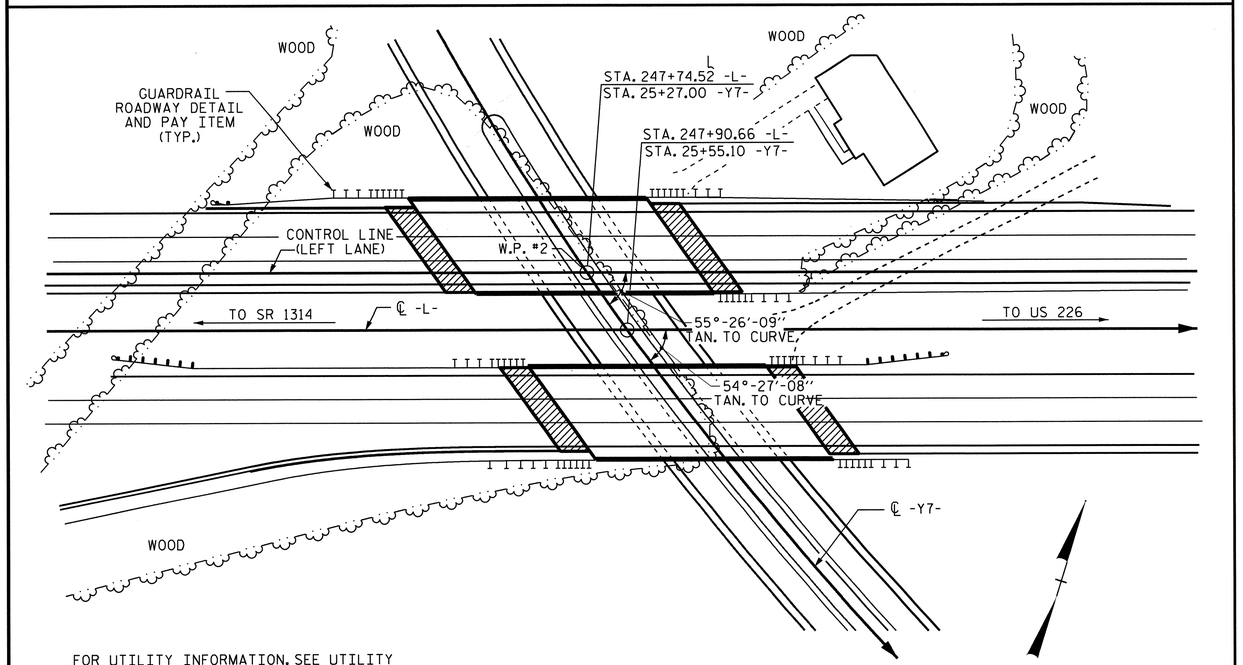

FOR UTILITY INFORMATION, SEE UTILITY PLANS AND SPECIAL PROVISION.

LOCATION SKETCH

NOTES

ASSUMED LIVE LOAD = HL 93 OR ALTERNATE LOADING.

FOR OTHER DESIGN DATA AND GENERAL NOTES, SEE SHEET SN.

THIS BRIDGE HAS BEEN DESIGNED IN ACCORDANCE WITH THE AASHTO LRFD BRIDGE DESIGN SPECIFICATIONS.

FOR EROSION CONTROL MEASURES SEE EROSION CONTROL PLANS.

REMOVABLE FORMS MAY BE USED IN LIEU OF METAL STAY-IN-PLACE FORMS IN ACCORDANCE WITH ARTICLE 420-3 OF THE STANDARD SPECIFICATIONS.

THE CLASS AA CONCRETE IN THE BRIDGE DECK SHALL CONTAIN FLY ASH OR GROUND GRANULATED BLAST FURNACE SLAG AT THE SUBSTITUTION RATE SPECIFIED IN ARTICLE 1024-1 AND IN ACCORDANCE WITH ARTICLES 1024-5 AND 1024-6 OF THE STANDARD SPECIFICATIONS. NO PAYMENT WILL BE MADE FOR THIS SUBSTITUTION AS IT IS CONSIDERED INCIDENTAL TO THE COST OF THE REINFORCED CONCRETE DECK SLAB.

THE CONTRACTOR SHALL PROVIDE INDEPENDENT ASSURANCE SAMPLES OF REINFORCING STEEL AS FOLLOWS: FOR PROJECTS REQUIRING UP TO 400 TONS OF REINFORCING STEEL, ONE 30 INCH SAMPLE OF EACH SIZE BAR USED, AND FOR PROJECTS REQUIRING OVER 400 TONS OF REINFORCING STEEL, TWO 30 INCH SAMPLES OF EACH SIZE BAR USED. THE BARS FROM WHICH THE SAMPLES ARE TAKEN MUST THEN BE SPLICED WITH REPLACEMENT BARS OF THE SIZE AND LENGTH OF THE SAMPLE, PLUS A MINIMUM LAP SPLICE OF THIRTY BAR DIAMETERS. PAYMENT FOR THE SAMPLES OF REINFORCING STEEL SHALL BE CONSIDERED INCIDENTAL TO VARIOUS PAY ITEMS.

PRESTRESSED CONCRETE DECK PANELS MAY BE USED IN LIEU OF METAL STAY-IN-PLACE FORMS IN ACCORDANCE WITH ARTICLE 420-3 OF THE STANDARD SPECIFICATIONS.

NEEDLE BEAMS WILL NOT BE ALLOWED UNLESS OTHERWISE CALLED FOR ON THE PLANS OR APPROVED BY THE ENGINEER.

FOR SUBMITTAL OF WORKING DRAWINGS, SEE SPECIAL PROVISIONS.

FOR FALSEWORK AND FORMWORK, SEE SPECIAL PROVISIONS.

FOR CRANE SAFETY, SEE SPECIAL PROVISIONS.

FOR GROUT FOR STRUCTURES, SEE SPECIAL PROVISIONS.

FOR PLACING LOAD ON STRUCTURE MEMBERS, SEE SPECIAL PROVISIONS.

FOR MAINTENANCE AND PROTECTION OF TRAFFIC BENEATH PROPOSED STRUCTURE, SEE SPECIAL PROVISIONS.

OBSERVE A THREE MONTH WAITING PERIOD AFTER CONSTRUCTING THE EMBANKMENT TO FINISHED GRADE BEFORE BEGINNING END BENT CONSTRUCTION AT END BENT Nos. 1 AND 2. THE WAITING PERIODS MAY BE REDUCED BY THE ENGINEER AFTER THE REVIEW AND ACCEPTANCE OF SETTLEMENT DATA THAT HAS BEEN OBTAINED BY EMBANKMENT MONITORING USING SURVEY HUBS. INSTALLATION AND MONITORING WILL BE THE RESPONSIBILITY OF THE CONTRACTOR AND WILL BE CONSIDERED INCIDENTAL TO THE PROJECT.

THIS BRIDGE IS LOCATED IN SEISMIC ZONE 1

TOTAL BILL OF MATERIAL

	FOUNDATION EXCAVATION	PDA TESTING	REINFORCED CONCRETE DECK SLAB	GROOVING BRIDGE FLOORS	CLASS A CONCRETE	BRIDGE APPROACH SLABS	REINFORCING STEEL	SPIRAL COLUMN REINFORCING STEEL	54'' PRESTRESSED CONCRETE GIRDERS		HP 12 X 53 STEEL PILES		PILE REDRIVES	CONCRETE BARRIER RAIL	4" SLOPE PROTECTION	ELASTOMERIC BEARINGS	EXPANSION JOINT SEALS	APPLICATION OF BRIDGE COATING *
	LUMP SUM	EA.	SQ. FT.	SQ. FT.	CU. YDS.	LUMP SUM	LBS.	LBS.	NO.	LIN. FT.	NO.	LIN. FT.	EA.	LIN. FT.	SQ. YDS.	LUMP SUM	LUMP SUM	LUMP SUM
SUPERSTRUCTURE			7226	8281		LUMP SUM			10	717.08				335.44		LUMP SUM	LUMP SUM	LUMP SUM
END BENT NO. 1					46.7		8855				8	400	8		422			
BENT NO. 1	LUMP SUM				83.1		9699	1339			24	1080	24					
END BENT NO. 2					46.5		8974				8	400	8		502			
TOTAL	LUMP SUM	1	7226	8281	176.3	LUMP SUM	27528	1339	10	717.08	40	1880	40	335.44	924	LUMP SUM	LUMP SUM	LUMP SUM

*APPROXIMATE SURFACE AREA TO BE PAINTED = 5831 SF

PROJECT NO. R-2707B
CLEVELAND COUNTY
STATION: 247+90.66 -L-

SHEET 3 OF 3

STATE OF NORTH CAROLINA
DEPARTMENT OF TRANSPORTATION
RALEIGH

GENERAL DRAWING FOR BRIDGE ON US 74 OVER SR 1313 BETWEEN SR 1314 AND NC 226 (LEFT LANE)

NORTH CAROLINA PROFESSIONAL SEAL 15825 ENGINEER BRUCE D. KLAPPENBACH
3-5-2014

REVISIONS						SHEET NO. S-3
NO.	BY:	DATE:	NO.	BY:	DATE:	TOTAL SHEETS 266
1			3			
2			4			

DRAWN BY : H. T. BARBOUR DATE : 05-07-12
CHECKED BY : D. A. GLADDEN DATE : 12-12
DESIGN ENGINEER OF RECORD: S. T. CHAMPION DATE : 5-13

05-MAR-2014 14:05
R:\Structures\Plans\Bailey\STRland2\tbarbour\Microstation\str-1\R-2707B_SD_GD.dgn
bklappenbach

STR. #1 NCBDS

LOAD AND RESISTANCE FACTOR RATING (LRFR) SUMMARY FOR PRESTRESSED CONCRETE GIRDERS

LEVEL		VEHICLE	WEIGHT (W) (TONS)	CONTROLLING LOAD RATING (#)	MINIMUM RATING FACTORS (RF)	TONS = W X RF	STRENGTH I LIMIT STATE											SERVICE III LIMIT STATE						COMMENT NUMBER
							LIVELOAD FACTORS	MOMENT					SHEAR					LIVELOAD FACTORS	MOMENT					
								DISTRIBUTION FACTORS (DF)	RATING FACTOR	SPAN	GIRDER LOCATION	DISTANCE FROM LEFT END OF SPAN (ft)	DISTRIBUTION FACTORS (DF)	RATING FACTOR	SPAN	GIRDER LOCATION	DISTANCE FROM LEFT END OF SPAN (ft)		DISTRIBUTION FACTORS (DF)	RATING FACTOR	SPAN	GIRDER LOCATION	DISTANCE FROM LEFT END OF SPAN (ft)	
DESIGN LOAD RATING		HL-93(Inv)	N/A	1	1.03	--	1.75	0.815	1.31	A	I	32.834	1.088	1.48	A	I	26.268	0.80	1.088	1.03	A	I	32.834	
		HL-93(Opr)	N/A	--	1.7	--	1.35	0.815	1.7	A	I	32.834	1.088	1.91	A	I	26.268	N/A	--	--	--	--	--	
		HS-20(Inv)	36.000	2	1.32	47.672	1.75	0.815	1.69	A	I	32.834	1.088	1.75	A	I	26.268	0.80	0.815	1.32	A	I	32.834	
		HS-20(Opr)	36.000	--	2.19	78.865	1.35	0.815	2.19	A	I	32.834	1.088	2.27	A	I	26.268	N/A	--	--	--	--	--	
LEGAL LOAD RATING	SV	SNSH	13.500	--	2.93	39.498	1.4	0.815	4.67	A	I	32.834	1.088	4.76	A	I	26.268	0.80	0.815	2.93	A	I	32.834	
		SNGARBS2	20.000	--	2.21	44.143	1.4	0.815	3.52	A	I	32.834	1.088	3.52	A	I	26.268	0.80	0.815	2.21	A	I	32.834	
		SNAGRIS2	22.000	--	2.1	46.237	1.4	0.815	3.35	A	I	32.834	1.088	3.32	A	I	26.268	0.80	0.815	2.10	A	I	32.834	
		SNCOTTS3	27.250	--	1.46	39.696	1.4	0.815	2.32	A	I	32.834	1.088	2.39	A	I	26.268	0.80	0.815	1.46	A	I	32.834	
		SNAGGRS4	34.925	--	1.23	42.874	1.4	0.815	1.96	A	I	32.834	1.088	2.08	A	I	26.268	0.80	0.815	1.23	A	I	32.834	
		SNS5A	35.550	--	1.2	42.652	1.4	0.815	1.91	A	I	32.834	1.088	2.16	A	I	26.268	0.80	0.815	1.20	A	I	32.834	
		SNS6A	39.950	--	1.11	44.149	1.4	0.815	1.76	A	I	32.834	1.088	2.01	A	I	26.268	0.80	0.815	1.11	A	I	32.834	
		SNS7B	42.000	--	1.05	44.208	1.4	0.815	1.68	A	I	32.834	1.088	2.03	A	I	26.268	0.80	0.815	1.05	A	I	32.834	
	TTST	TNAGRIT3	33.000	--	1.35	44.514	1.4	0.815	2.15	A	I	32.834	1.088	2.36	A	I	26.268	0.80	0.815	1.35	A	I	32.834	
		TNT4A	33.075	--	1.36	44.851	1.4	0.815	2.16	A	I	32.834	1.088	2.25	A	I	26.268	0.80	0.815	1.36	A	I	32.834	
		TNT6A	41.600	--	1.11	46.297	1.4	0.815	1.78	A	I	32.834	1.088	2.28	A	I	26.268	0.80	0.815	1.11	A	I	32.834	
		TNT7A	42.000	--	1.12	47.070	1.4	0.815	1.79	A	I	32.834	1.088	2.16	A	I	26.268	0.80	0.815	1.12	A	I	32.834	
		TNT7B	42.000	--	1.17	48.929	1.4	0.815	1.86	A	I	32.834	1.088	1.94	A	I	26.268	0.80	0.815	1.16	A	I	32.834	
		TNAGRIT4	43.000	--	1.1	47.476	1.4	0.815	1.76	A	I	32.834	1.088	1.87	A	I	26.268	0.80	0.815	1.10	A	I	32.834	
		TNAGT5A	45.000	--	1.04	46.760	1.4	0.815	1.66	A	I	32.834	1.088	1.92	A	I	26.268	0.80	0.815	1.04	A	I	32.834	
		TNAGT5B	45.000	3	1.03	46.118	1.4	0.815	1.63	A	I	32.834	1.088	1.77	A	I	26.268	0.80	0.815	1.02	A	I	32.834	

LOAD FACTORS:

DESIGN LOAD RATING FACTORS	LIMIT STATE	γ_{DC}	γ_{DW}
	STRENGTH I	1.25	1.50
	SERVICE III	1.00	1.00

NOTES:

MINIMUM RATING FACTORS ARE BASED ON THE STRENGTH I AND SERVICE III LIMIT STATES.

ALLOWABLE STRESSES FOR SERVICE III LIMIT STATE ARE AS REQUIRED FOR DESIGN.

COMMENTS:

1.
2.
3.
4.

(#) CONTROLLING LOAD RATING

(1) DESIGN LOAD RATING (HL-93)

(2) DESIGN LOAD RATING (HS-20)

(3) LEGAL LOAD RATING **

** SEE CHART FOR VEHICLE TYPE

GIRDER LOCATION

I - INTERIOR GIRDER
EL - EXTERIOR LEFT GIRDER
ER - EXTERIOR RIGHT GIRDER

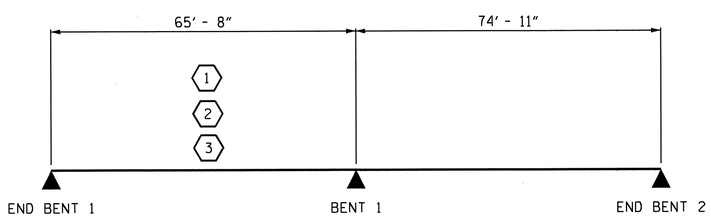

LRFR SUMMARY

PROJECT NO. R-2707B
CLEVELAND COUNTY
STATION: 247+90.66 -L-
LEFT LANE

STATE OF NORTH CAROLINA
DEPARTMENT OF TRANSPORTATION
RALEIGH

STANDARD
LRFR SUMMARY FOR PRESTRESSED CONCRETE GIRDERS
(NON-INTERSTATE TRAFFIC)

NORTH CAROLINA PROFESSIONAL SEAL 15825 ENGINEER BRUCE D. KLAPPENBACH
May 14, 2013

REVISIONS						SHEET NO.
NO.	BY:	DATE:	NO.	BY:	DATE:	S-4
1			3			TOTAL SHEETS
2			4			266

STD. NO. LRFR1

ASSEMBLED BY : S.T. CHAMPION DATE : 06-2012
CHECKED BY : B.A. DUKE DATE : 08-2012
DRAWN BY : MAA 1/08
CHECKED BY : GM/DI 2/08
REV. 11/12/08R MAA/GM

14-MAY-2013 18:44
R:\Structures\Plans\Bailey\STRland2\champion\Microstation\R2707B_SD_PCG_RATING_LTLN.dgn
bklappenbach

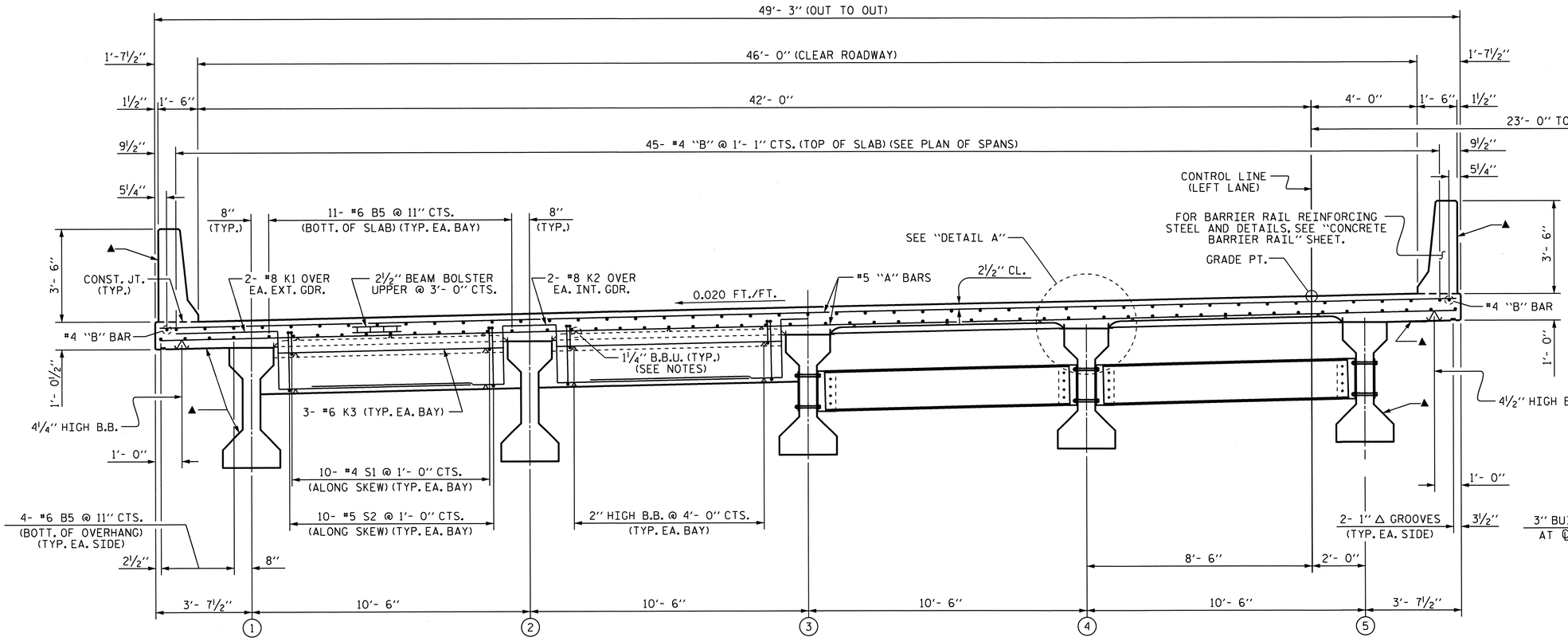

PART TYPICAL SECTION

(SHOWING END BENT DIAPHRAGMS)

PART TYPICAL SECTION

(SHOWING INTERMEDIATE DIAPHRAGMS)

▲ FOR SURFACES TO BE PAINTED, SEE BRIDGE COATING DETAIL. SEE SPECIAL PROVISION FOR "APPLICATION OF BRIDGE COATING".

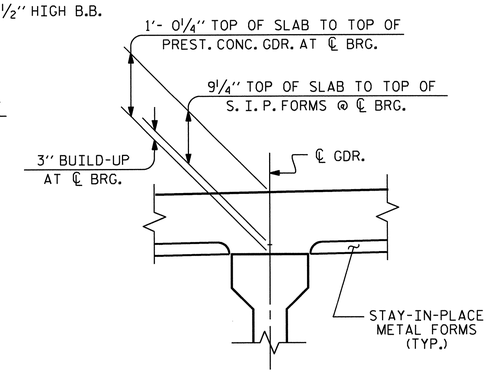

DETAIL A

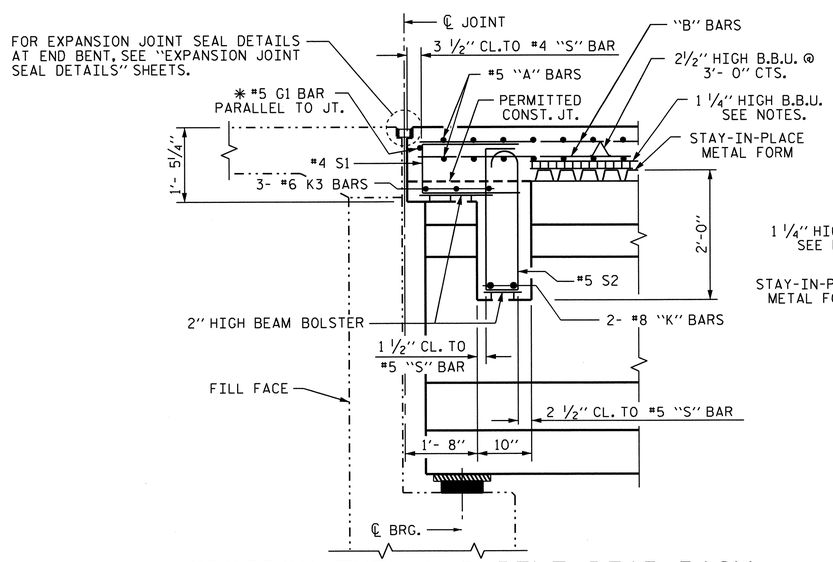

SECTION THRU END BENT DIAPHRAGM

✱ #5 G1 MAY BE SHIFTED SLIGHTLY AS NECESSARY TO CLEAR REINFORCING STEEL AND STIRRUPS.

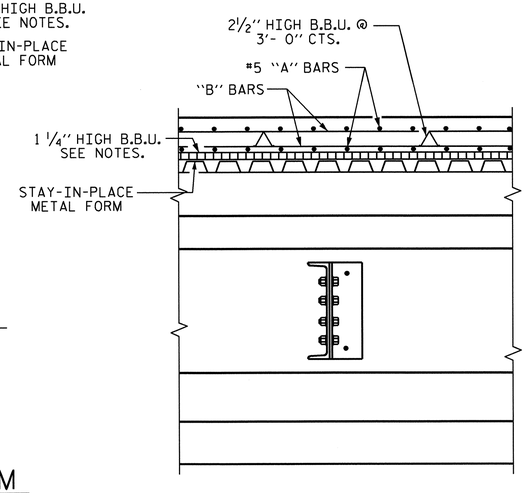

SECTION THRU INTERMEDIATE DIAPHRAGM

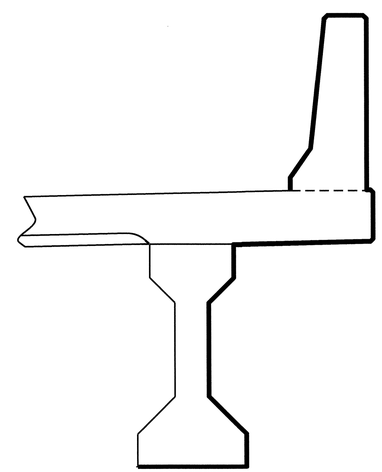

PAINTED SURFACES. (SEE "APPLICATION OF BRIDGE COATING" SPECIAL PROVISION.)

BRIDGE COATING DETAIL

RIGHT SIDE SHOWN. LEFT SIDE TYPICAL.

PROJECT NO. R-2707B

CLEVELAND COUNTY

STATION: 247+90.66 -L-

SHEET 1 OF 3

STATE OF NORTH CAROLINA
DEPARTMENT OF TRANSPORTATION
RALEIGH

SUPERSTRUCTURE TYPICAL SECTION (LEFT LANE)

REVISIONS						SHEET NO.
NO.	BY:	DATE:	NO.	BY:	DATE:	S-5
1			3			TOTAL SHEETS
2			4			266

DRAWN BY : D. A. GLADDEN DATE : 10-4-10
CHECKED BY : H. T. BARBOUR DATE : 1-5-12
DESIGN ENGINEER OF RECORD: S.T. CHAMPION DATE : 5-13-13

05-MAR-2014 13:08
R:\Structures\Plans\Bailey\STRland2\dgladden\Microstation\R2707B_SD_STR1.dgn
bklappenbach

STR. #1

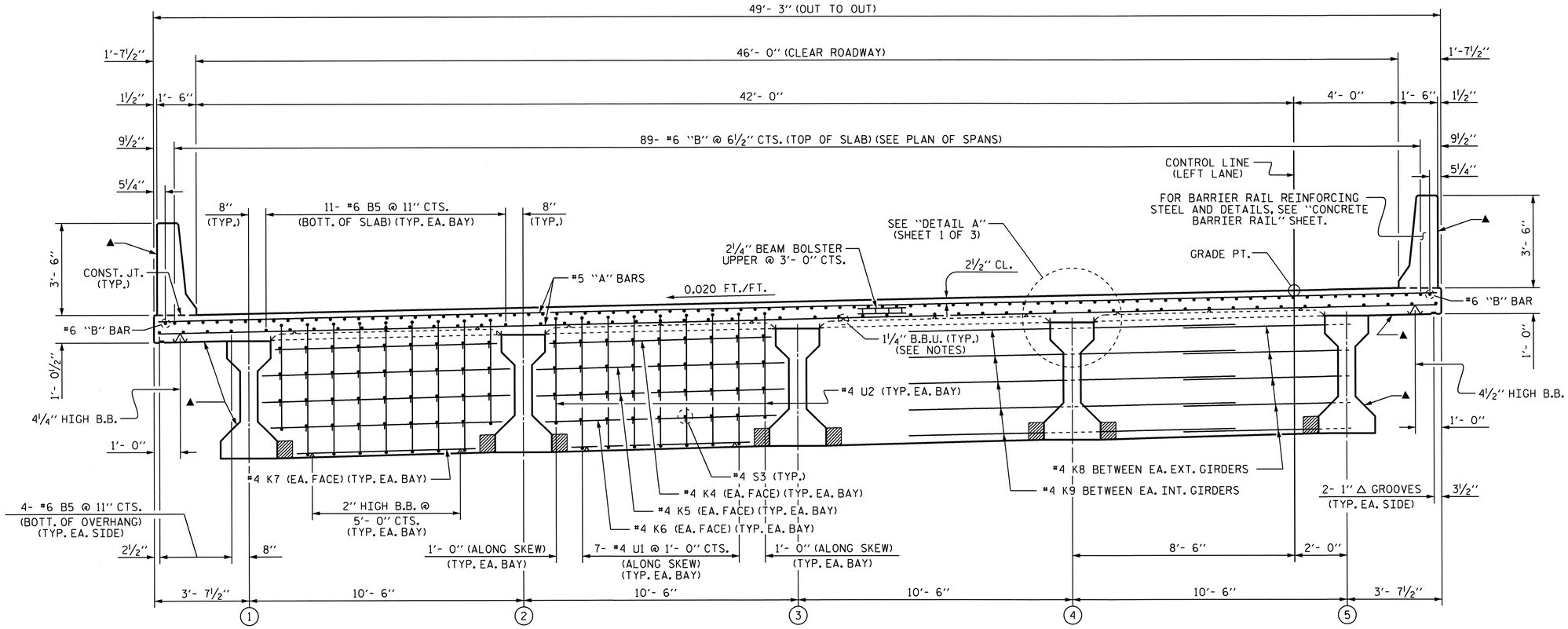

▲ FOR SURFACES TO BE PAINTED, SEE BRIDGE COATING DETAIL, SHEET 1 OF 3. SEE SPECIAL PROVISION FOR "APPLICATION OF BRIDGE COATING".

TYPICAL SECTION

(SHOWING BENT DIAPHRAGMS)

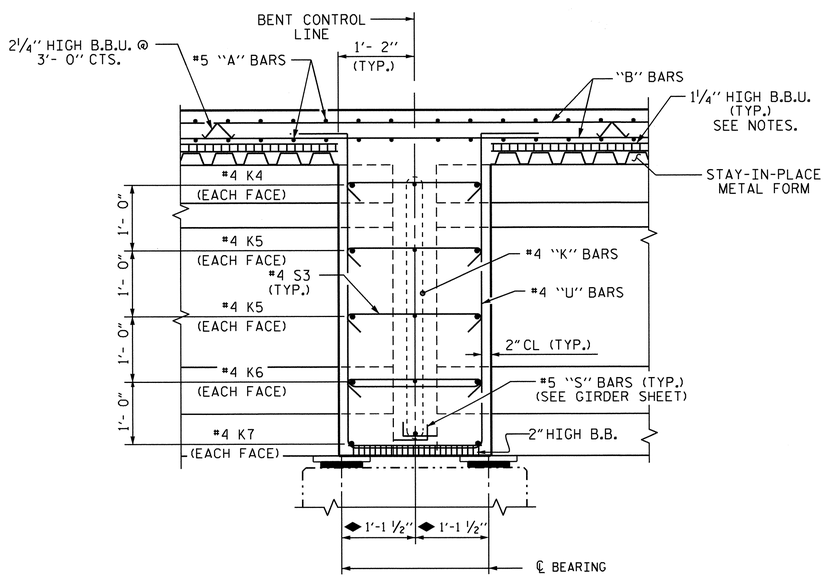

SECTION THRU BENT DIAPHRAGM

◆ MEASURED ALONG ℄ GIRDER

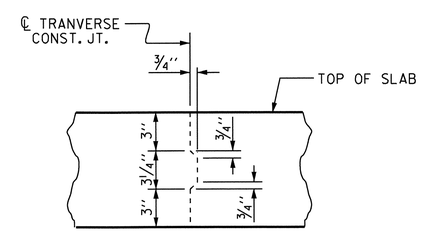

TRANSVERSE CONSTRUCTION JOINT DETAIL

NOTE: REINFORCING STEEL IN SLAB NOT SHOWN. LONGITUDINAL REINFORCING STEEL SHALL BE CONTINUOUS THRU JOINT

PROJECT NO. R-2707B
CLEVELAND COUNTY
STATION: 247+90.66 -L-

SHEET 2 OF 3

STATE OF NORTH CAROLINA
DEPARTMENT OF TRANSPORTATION
RALEIGH

SUPERSTRUCTURE
TYPICAL SECTION
(LEFT LANE)

NORTH CAROLINA PROFESSIONAL SEAL 15825 ENGINEER BRADLEY D. KLAPPENBACH 3-6-2014

REVISIONS						SHEET NO.
NO.	BY:	DATE:	NO.	BY:	DATE:	S-6
1			3			TOTAL SHEETS
2			4			266

DRAWN BY : D. A. GLADDEN DATE : 10-4-10
CHECKED BY : H. T. BARBOUR DATE : 1-5-12
DESIGN ENGINEER OF RECORD: S.T. CHAMPION DATE : 5-13-13

06-MAR-2014 08:27
R:\Structures\Plans\Bailey\STRland2\dgladden\Microstation\R2707B_SD_STR1.dgn
bklappenbach

STR. #1

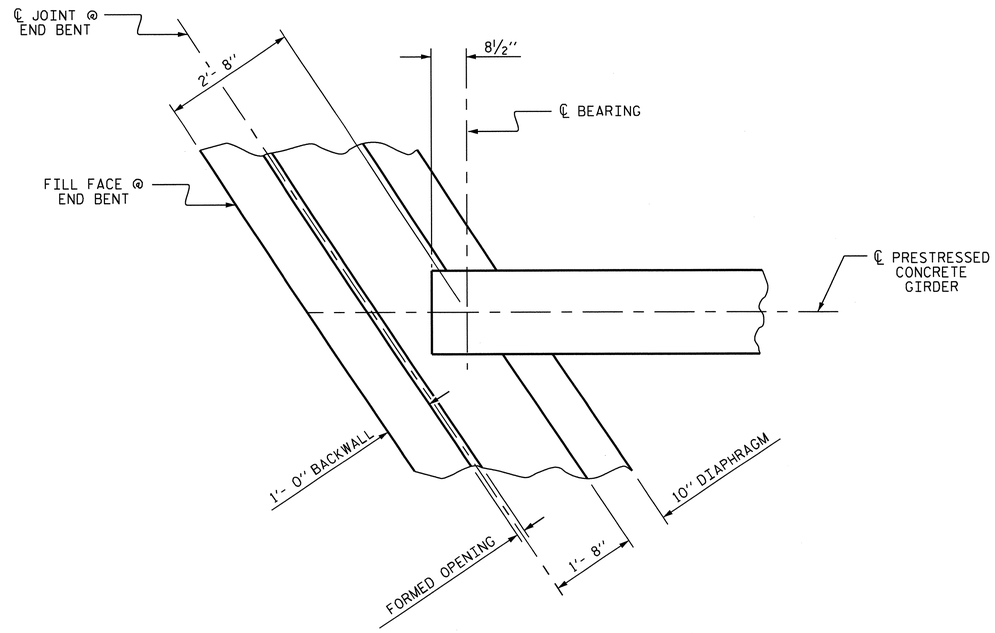

PLAN OF END BENT DIAPHRAGM

NOTES

PROVIDE 1¼" HIGH BEAM BOLSTERS UPPER AT 4'-0" CTS. ATOP THE METAL STAY-IN-PLACE FORMS TO SUPPORT THE BOTTOM MAT OF 'A' BARS. WHEN USING REMOVABLE FORMS, PROVIDE CONTINUOUS HIGH CHAIRS FOR METAL DECK (C.H.C.M.) @ 4'-0" CTS. WITH A HEIGHT TO SUPPORT THE BOTTOM MAT OF 'A' BARS A CLEAR DISTANCE OF 2½" ABOVE THE TOP OF THE REMOVABLE FORM.

LONGITUDINAL STEEL MAY BE SHIFTED SLIGHTLY, AS NECESSARY, TO AVOID INTERFERENCE WITH STIRRUPS IN PRESTRESSED CONCRETE GIRDERS.

PREVIOUSLY CAST CONCRETE IN A CONTINUOUS UNIT SHALL HAVE ATTAINED A MINIMUM COMPRESSIVE STRENGTH OF 3,000 PSI BEFORE ADDITIONAL CONCRETE IS CAST IN THE UNIT.

BARRIER RAIL IN A CONTINUOUS UNIT SHALL NOT BE CAST UNTIL ALL SLAB CONCRETE IN THE UNIT HAS BEEN CAST AND HAS REACHED A MINIMUM COMPRESSIVE STRENGTH OF 3,000 PSI.

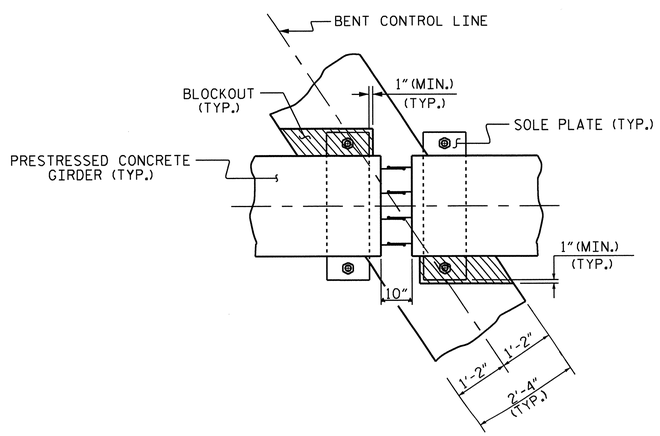

PLAN VIEW

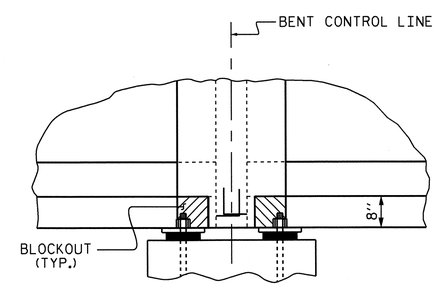

SECTION A-A

BENT DIAPHRAGM BLOCKOUT DETAIL

(PRESTRESSED GIRDERS WITH CONTINUOUS DECK SLAB)

PROJECT NO. R-2707B
CLEVELAND COUNTY
STATION: 247+90.66 -L-

SHEET 3 OF 3

STATE OF NORTH CAROLINA
DEPARTMENT OF TRANSPORTATION
RALEIGH

SUPERSTRUCTURE
TYPICAL SECTION
(LEFT LANE)

NORTH CAROLINA PROFESSIONAL SEAL 15825 ENGINEER BRUCE D. KLAPPENBACH
6-27-2013

REVISIONS						SHEET NO.
NO.	BY:	DATE:	NO.	BY:	DATE:	S-7
1			3			TOTAL SHEETS
2			4			266

DRAWN BY : D. A. GLADDEN DATE : 10-4-10
CHECKED BY : H. T. BARBOUR DATE : 1-5-12
DESIGN ENGINEER OF RECORD: S.T. CHAMPION DATE : 5-13-13

24-JUN-2013 09:53
R:\Structures\Plans\Bailey\STRland2\dgladden\Microstation\R2707B_SD_STR1.dgn
dgladden

STR. #1

149'- 3" (FILL FACE @ END BENT #1 TO FILL FACE @ END BENT #2)

70'- 0" (FILL FACE @ END BENT #1 TO BENT #1 CONTROL LINE)

5'- 4¼"

#5 A101 THRU #5 A122 (TOP OF SLAB) (3 BARS/MARK)
#5 A201 THRU #5 A222 (BOTT. OF SLAB) (3 BARS/MARK)

248- #5 A1 @ 5½" CTS. (TOP OF SLAB)
248- #5 A2 @ 5½" CTS. (BOTT. OF SLAB)

5½"

BENT #1 CONTROL LINE

#4 B1

#6 B4

#6 B3

1'- 7½"

1½"

9½"

5¼"

49'- 3" (OUT TO OUT)

42'- 0"

#8 K1 OVER EA. EXT. GDR.

TRANSVERSE CONST. JT.

#5 G1

GDR. A1

GDR. A2

5- #4 K8 BETWEEN EA. EXT. GIRDERS (SEE TYPICAL SECTION)

5- #4 K9 BETWEEN EA. INT. GIRDERS (SEE TYPICAL SECTION)

9- #4 "U" @ 1'- 0" CTS. (TYP. EA. BAY) (SEE TYPICAL SECTION)

8" (TYP.)

#6 K3 (TYP. EA. BAY)

10- #4 S1 @ 1'- 0" CTS. (TYP. EA. BAY)

11- #6 B5 @ 11" CTS. (BOTT. OF SLAB) (3 BAR RUNS) (2'- 7" MIN. SPLICE) (TYP. EA. BAY)

#4 "K" BARS (TYP. EA. BAY) (SEE TYPICAL SECTION)

10- #4 S2 @ 1'- 0" CTS. (TYP. EA. BAY)

GDR. A3

34- #4 S3 @ 1'- 0" CTS. (TYP. EA. BAY) (SEE TYPICAL SECTION)

45- #4 B1 @ 1'- 1" CTS. (TOP OF SLAB) (2 BAR RUNS) (2'- 0" MIN. SPLICE)

8" (TYP.)

TRANSVERSE CONST. JT.

℄ JOINT @ END BENT #1

10" END BENT DIAPHRAGM (TYP.)

2'- 4" BENT DIAPHRAGM (TYP.)

53- #4 J1 @ 1'- 0" CTS.

51'- 8 5/16"

GDR. A4

FILL FACE @ END BENT #1

#8 K2 OVER EA. INT. GDR.

W.P. #1

DETAIL A

GDR. A5

45- #6 B3 @ 1'- 1" CTS. (TOP OF SLAB)

44- #6 B4 @ 1'- 1" CTS. (TOP OF SLAB)

W.P. #2

CONTROL LINE LEFT LANE

4'- 0"

56°16'39"

56°16'39"

1'- 7½"

1½"

23'- 0" TO ℄ -L-

7'- 5 9/16"

9½"

5¼"

#4 B1

4- #6 B5 @ 11" CTS. (BOTT. OF OVERHANG) (3 BAR RUNS) (2'- 7" MIN. SPLICE) (TYP. EA. SIDE)

2½" (TYP.)

2'- 0" MIN. SPLICE

9½" (TYP.)

5¼" (TYP.)

1'-4" (TYP.)

#6 B3

#6 B4

10'- 4" (TYP.)

11'- 9" (TYP.)

2'- 0" MIN. SPLICE

25'- 8" (TYP.)

28'- 6" (TYP.)

PLAN OF SPAN A

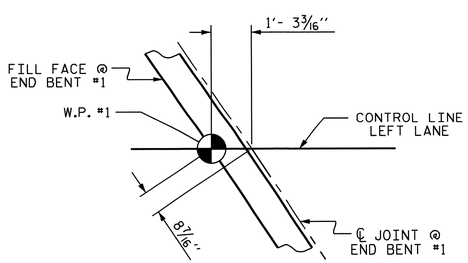

DETAIL A

PROJECT NO. R-2707B

CLEVELAND COUNTY

STATION: 247+90.66 -L-

SHEET 1 OF 2

STATE OF NORTH CAROLINA
DEPARTMENT OF TRANSPORTATION
RALEIGH

SUPERSTRUCTURE PLAN OF SPAN A (LEFT LANE)

NORTH CAROLINA PROFESSIONAL SEAL 15826 ENGINEER ROBERT D. KLAPPENBACH 6-27-2013

REVISIONS						SHEET NO.
NO.	BY:	DATE:	NO.	BY:	DATE:	S-8
1			3			TOTAL SHEETS
2			4			266

DRAWN BY : D. A. GLADDEN DATE : 10-21-10
CHECKED BY : H. T. BARBOUR DATE : 1-5-12
DESIGN ENGINEER OF RECORD: S.T. CHAMPION DATE : 5-13-13

24-JUN-2013 09:54
R:\Structures\Plans\Bailey\STRland2\dgladden\Microstation\R2707B_SD_STR1.dgn
dgladden

STR. #1 NGODS

149'- 3" (FILL FACE @ END BENT #1 TO FILL FACE @ END BENT #2)

79'- 3" (BENT #1 CONTROL LINE TO FILL FACE @ END BENT #2)

30'- 8 13/16"

BENT #1 CONTROL LINE

#6 B3

#6 B4

1'-4" (TYP.)

9 1/2" (TYP.)

5/4" (TYP.)

2 1/2" (TYP.)

4- #6 B5 @ 11" CTS. (BOTT. OF OVERHANG) (3 BAR RUNS) (2'- 7" MIN. SPLICE) (TYP. EA. SIDE)

#4 B2

9 1/2"

5/4"

1 1/2"

1'- 7 1/2"

5- #4 K8 BETWEEN EA. EXT. GIRDERS (SEE TYPICAL SECTION)

5- #4 K9 BETWEEN EA. INT. GIRDERS (SEE TYPICAL SECTION)

44- #6 B4 @ 1'- 1" CTS. (TOP OF SLAB)

45- #6 B3 @ 1'- 1" CTS. (TOP OF SLAB)

GDR. B1

GDR. B2

#8 K1 OVER EA. EXT. GDR.

#5 G1

53'- 1 13/16"

53- #4 J1 @ 1'- 0" CTS.

8" (TYP.)

11- #6 B5 @ 11" CTS. (BOTT. OF SLAB) (3 BAR RUNS) (2'- 7" MIN. SPLICE) (TYP. EA. BAY)

#6 K3 (TYP. EA. BAY)

10- #4 S2 @ 1'- 0" CTS. (TYP. EA. BAY)

34- #4 S3 @ 1'- 0" CTS. (TYP. EA. BAY) (SEE TYPICAL SECTION)

#4 "K" BARS (TYP. EA. BAY) (SEE TYPICAL SECTION)

GDR. B3

10- #4 S1 @ 1'- 0" CTS. (TYP. EA. BAY)

45- #4 B2 @ 1'- 1" CTS. (TOP OF SLAB) (2 BAR RUNS) (2'- 0" MIN. SPLICE)

42'- 0"

49'- 3" (OUT TO OUT)

8" (TYP.)

℄ JOINT @ END BENT #2

10" END BENT DIAPHRAGM (TYP.)

9- #4 "U" @ 1'- 0" CTS. (TYP. EA. BAY) (SEE TYPICAL SECTION)

TRANSVERSE CONST. JT.

GDR. B4

TRANSVERSE CONST. JT.

6'- 0 11/16"

#8 K2 OVER EA. INT. GDR.

FILL FACE @ END BENT #2

CONTROL LINE LEFT LANE

W.P. #2

GDR. B5

W.P. #3

DETAIL B

56°16'39"

56°16'39"

4'- 0"

#6 B3

#6 B4

9 1/2"

5/4"

#4 B2

1 1/2"

1'- 7 1/2"

10'- 4" (TYP.)

11'- 9" (TYP.)

23'- 0" TO ℄ -L-

25'- 8" (TYP.)

28'- 6" (TYP.)

5 1/2"

248- #5 A1 @ 5 1/2" CTS. (TOP OF SLAB)

248- #5 A2 @ 5 1/2" CTS. (BOTT. OF SLAB)

#5 A101 THRU #5 A122 (TOP OF SLAB) (3 BARS/MARK)

#5 A201 THRU #5 A222 (BOTT. OF SLAB) (3 BARS/MARK)

PLAN OF SPAN B

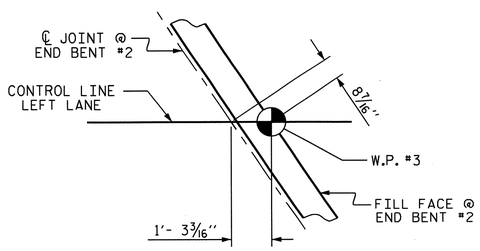

DETAIL B

PROJECT NO. R-2707B

CLEVELAND COUNTY

STATION: 247+90.66 -L-

SHEET 2 OF 2

STATE OF NORTH CAROLINA
DEPARTMENT OF TRANSPORTATION
RALEIGH

SUPERSTRUCTURE PLAN OF SPAN B (LEFT LANE)

NORTH CAROLINA PROFESSIONAL SEAL 15825 PROJECT ENGINEER D. KLAPPENBACH 6-27-2013

REVISIONS						SHEET NO.
NO.	BY:	DATE:	NO.	BY:	DATE:	S-9
1			3			TOTAL SHEETS
2			4			266

DRAWN BY : D. A. GLADDEN DATE : 10-21-10

CHECKED BY : H. T. BARBOUR DATE : 1-5-12

DESIGN ENGINEER OF RECORD: S.T. CHAMPION DATE : 5-13-13

24-JUN-2013 09:54
R:\Structures\Plans\Bailey\STRland2\dgladden\Microstation\R2707B_SD_STR1.dgn
dgladden

STR. #1

NCDOT

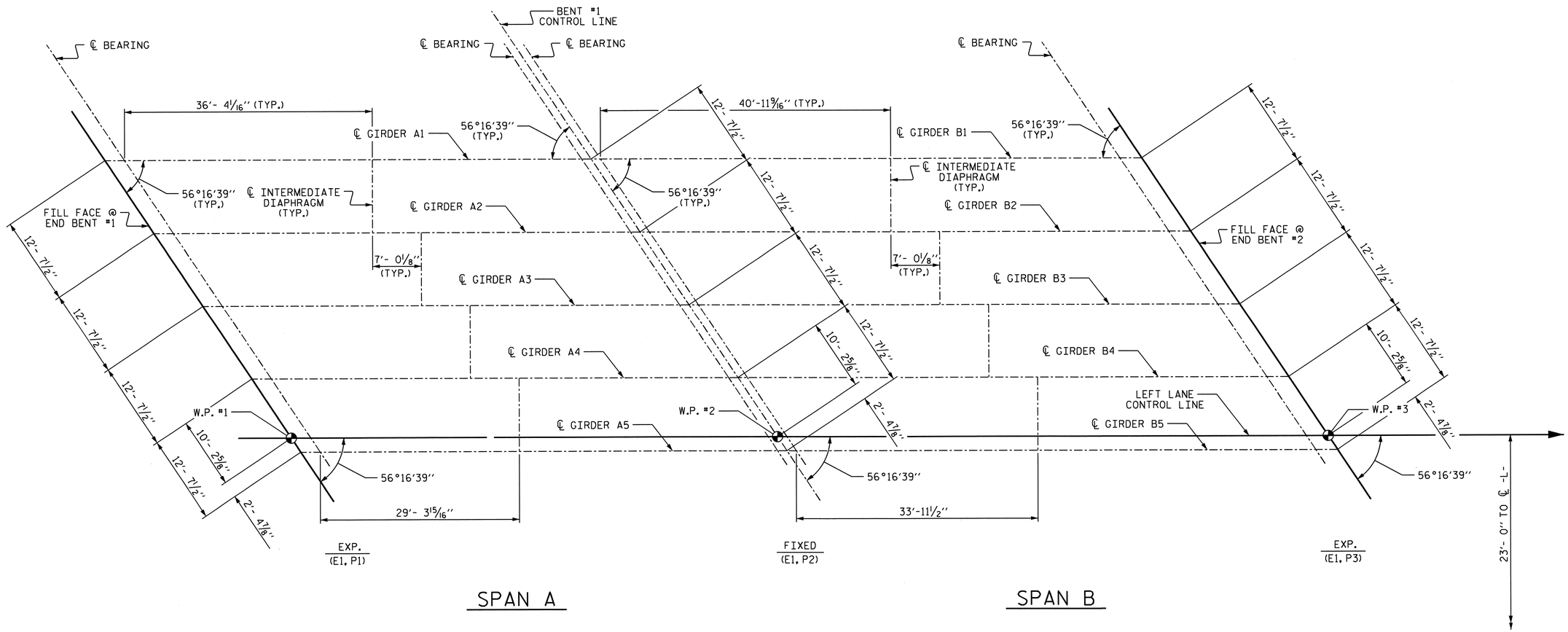

FRAMING PLAN

PROJECT NO. R-2707B
CLEVELAND COUNTY
STATION: 247+90.66 -L-

STATE OF NORTH CAROLINA
DEPARTMENT OF TRANSPORTATION
RALEIGH

SUPERSTRUCTURE FRAMING PLAN (LEFT LANE)

NORTH CAROLINA PROFESSIONAL SEAL 15825 ENGINEER BRYCE E. D. KLAPPENBACH
6-27-2013

REVISIONS						SHEET NO.
NO.	BY:	DATE:	NO.	BY:	DATE:	S-10
1			3			TOTAL SHEETS
2			4			266

DRAWN BY : D. A. GLADDEN DATE : 10-18-10
CHECKED BY : H. T. BARBOUR DATE : 1-5-12
DESIGN ENGINEER OF RECORD: S.T. CHAMPION DATE : 5-13-13

14-MAY-2013 09:20
R:\Structures\Plans\Bailey\STRland2\dgladden\Microstation\R2707B_SD_STR1.dgn
dgladden

STR. #1 NCDOS

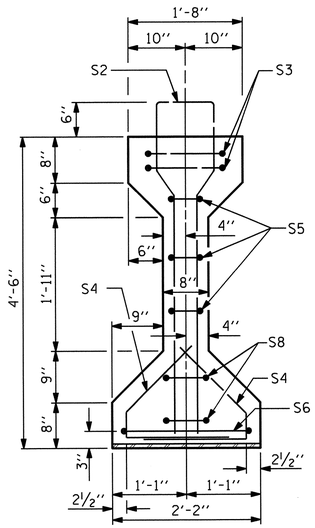

SECTION A-A

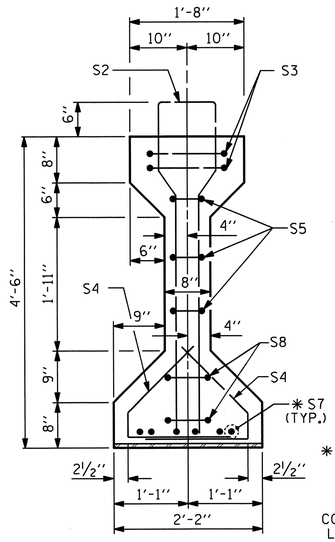

SECTION B-B

✱ FOR S7 BARS, SEE DETAIL "A" OF PRESTRESSED CONCRETE GIRDER CONTINUOUS FOR LIVE LOAD DETAILS SHEET

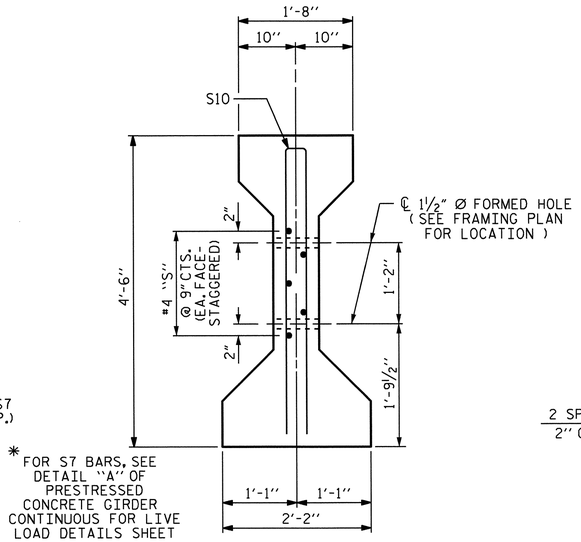

SECTION C-C

(S1 BARS NOT SHOWN)

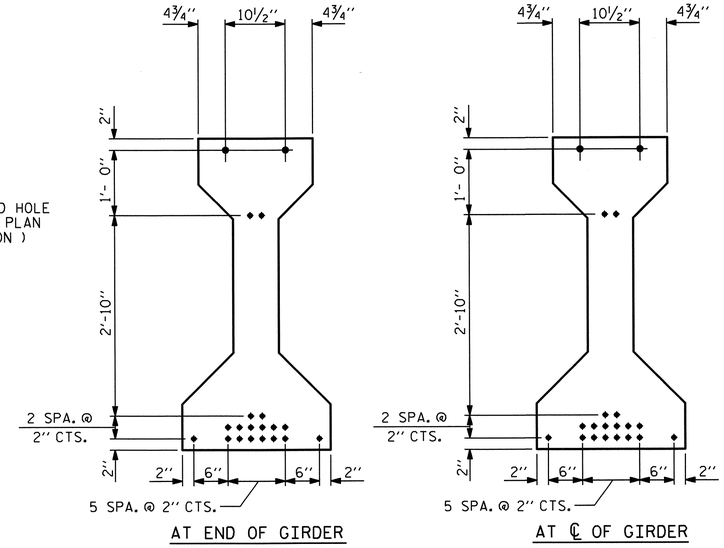

0.6" Ø LOW RELAXATION STRAND LAYOUT

0.6" Ø L. R. GRADE 270 STRANDS

AREA (SQUARE INCHES)	ULTIMATE STRENGTH (LBS. PER STRAND)	APPLIED PRESTRESS (LBS. PER STRAND)
0.217	58,600	43,950

REINFORCING STEEL FOR ONE GIRDER

	BAR	NUMBER	SIZE	TYPE	LENGTH	WEIGHT
	S1	92	#4	1	10'-8"	656
	S2	12	#6	1	10'-8"	192
	S3	4	#4	2	9'-1"	24
	S4	72	#4	3	3'-5"	164
	S5	6	#4	2	8'-5"	34
	S6	1	#4	2	9'-11"	7
	✱ S7	6	#5	STR	3'-8"	23
	S8	4	#4	2	8'-7"	23
	S9	1	#3	STR	1'-10"	1
EXTERIOR GDR.	S10	2	#5	2	8'-8"	18
INTERIOR GDR.	S10	4	#5	2	8'-8"	36
EXTERIOR GDR.	S11	5	#4	STR	7'-0"	23
INTERIOR GDR.	S12	5	#4	STR	14'-1"	47

✱ NOTE: S7 BARS SHALL BE BENT BEFORE SHIPMENT. HEAT BENDING SHALL NOT BE ALLOWED.

BAR TYPES

ALL BAR DIMENSIONS ARE OUT-TO-OUT

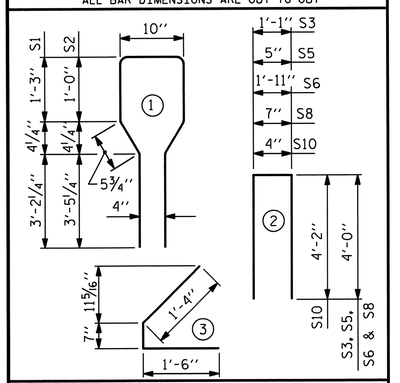

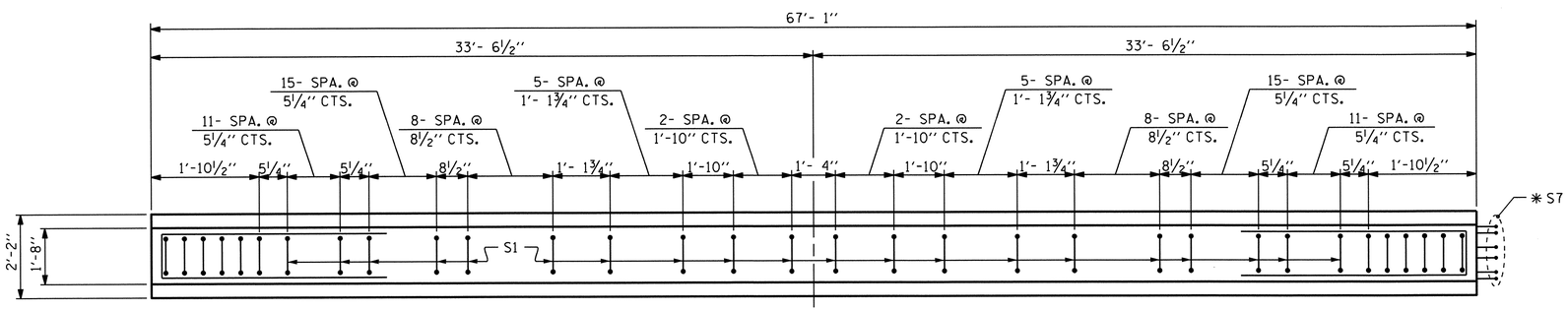

PLAN OF GIRDER

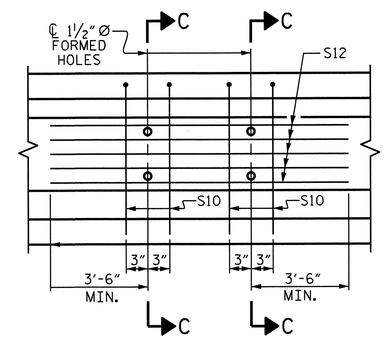

PARTIAL ELEVATION

SHOWING INTERMEDIATE DIAPHRAGM REINFORCING STEEL FOR GIRDER Nos. 2, 3 & 4

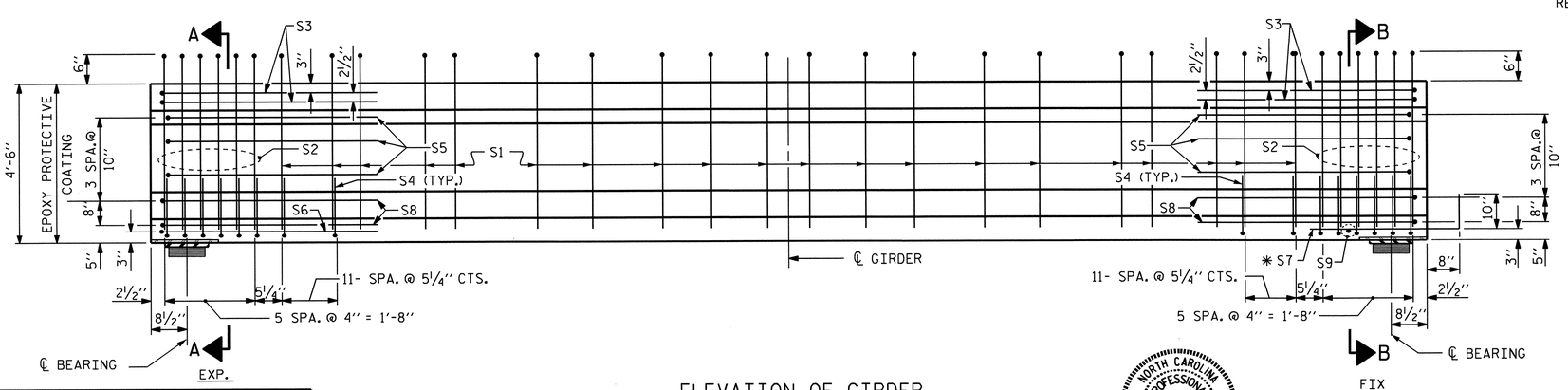

ELEVATION OF GIRDER

(SEE PARTIAL ELEVATION FOR ADDITIONAL "S" BARS)

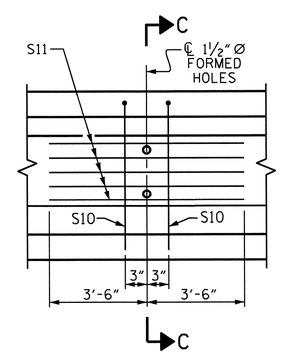

PARTIAL ELEVATION

SHOWING INTERMEDIATE DIAPHRAGM REINFORCING STEEL FOR GIRDER Nos. 1 & 5

QUANTITIES FOR ONE GIRDER

	REINFORCING STEEL LB.	5000 PSI CONCRETE C.Y.	0.6" Ø L.R. STRANDS No.
EXT. GDR.	1165	13.6	20
INT. GDR.	1207	13.6	20

GIRDERS REQUIRED

NUMBER	LENGTH	TOTAL LENGTH
5	67'- 1"	335'- 5"

PROJECT NO. R-2707B

CLEVELAND COUNTY

STATION: 247+90.66 -L-

STATE OF NORTH CAROLINA
DEPARTMENT OF TRANSPORTATION
RALEIGH

AASHTO TYPE IV PRESTRESSED CONCRETE GIRDER CONTINUOUS FOR LIVE LOAD (SPAN A) (LEFT LANE)

REVISIONS						
NO.	BY:	DATE:	NO.	BY:	DATE:	
1			3			
2			4			

SHEET NO. S-11

TOTAL SHEETS 266

DESIGN ENGINEER OF RECORD: S.T. CHAMPION DATE : 5-13-13

ASSEMBLED BY : D. A. GLADDEN DATE : 10-25-10
CHECKED BY : H. T. BARBOUR DATE : 1-5-12

DRAWN BY : ELR 8/91
CHECKED BY : GRP 8/91

REV. 7/17/98 RWW/LES
REV. 10/17/00R RWW/LES
REV. 5/1/06R TLA/GM

NORTH CAROLINA PROFESSIONAL SEAL 15825 ENGINEER BRUCE O. KLAPPENBACH 6-27-2013

27-JUN-2013 10:05
R:\Structures\Plans\Bailey\STRland2\dgladden\Microstation\R2707B_SD_STR1.dgn
bklappenbach

STR. #1

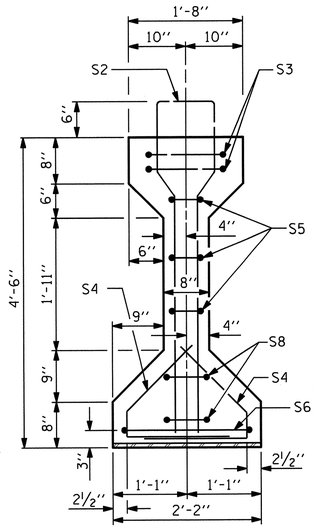

SECTION A-A

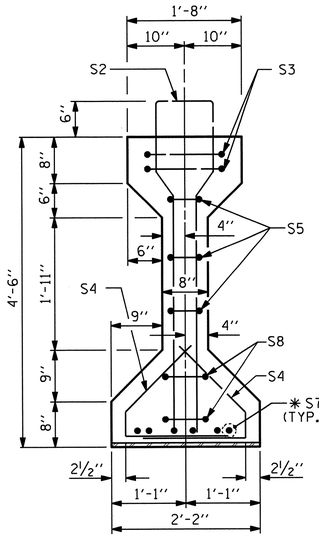

SECTION B-B

* FOR S7 BARS, SEE DETAIL "A" OF PRESTRESSED CONCRETE GIRDER CONTINUOUS FOR LIVE LOAD DETAILS SHEET

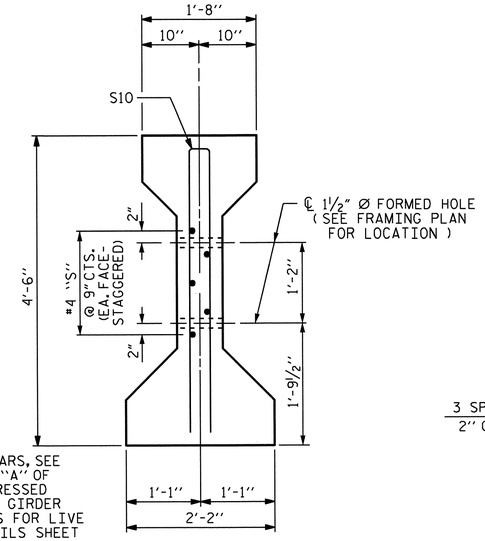

SECTION C-C

(S1 BARS NOT SHOWN)

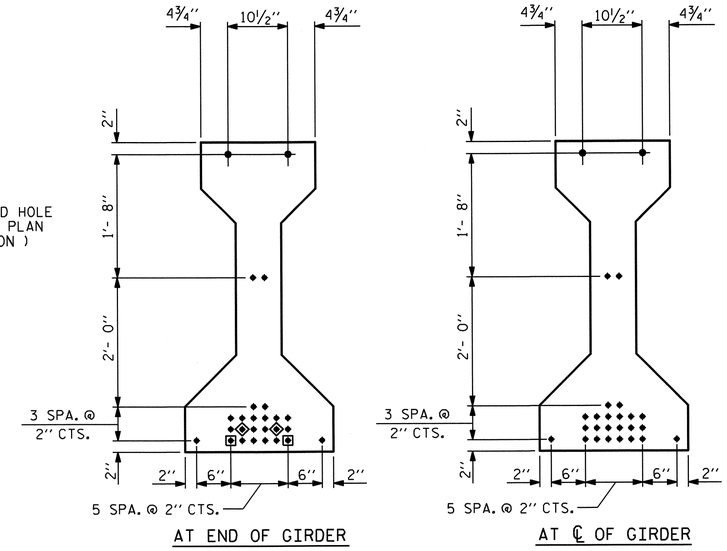

0.6" Ø LOW RELAXATION STRAND LAYOUT

▣ STRANDS DEBONDED FOR 12'- 0" FROM END OF GIRDER.
◈ STRANDS DEBONDED FOR 10'- 0" FROM END OF GIRDER.

0.6" Ø L. R. GRADE 270 STRANDS

AREA (SQUARE INCHES)	ULTIMATE STRENGTH (LBS. PER STRAND)	APPLIED PRESTRESS (LBS. PER STRAND)
0.217	58,600	43,950

REINFORCING STEEL FOR ONE GIRDER

	BAR	NUMBER	SIZE	TYPE	LENGTH	WEIGHT
	S1	116	#4	1	10'-8"	827
	S2	12	#6	1	10'-8"	192
	S3	4	#4	2	9'-1"	24
	S4	76	#4	3	3'-5"	173
	S5	6	#4	2	8'-5"	34
	S6	1	#4	2	9'-11"	7
	* S7	6	#5	STR	3'-8"	23
	S8	4	#4	2	8'-7"	23
	S9	1	#3	STR	1'-10"	1
EXTERIOR GDR.	S10	2	#5	2	8'-8"	18
INTERIOR GDR.	S10	4	#5	2	8'-8"	36
EXTERIOR GDR.	S11	5	#4	STR	7'-0"	23
INTERIOR GDR.	S12	5	#4	STR	14'-1"	47

* NOTE: S7 BARS SHALL BE BENT BEFORE SHIPMENT. HEAT BENDING SHALL NOT BE ALLOWED.

BAR TYPES

ALL BAR DIMENSIONS ARE OUT-TO-OUT

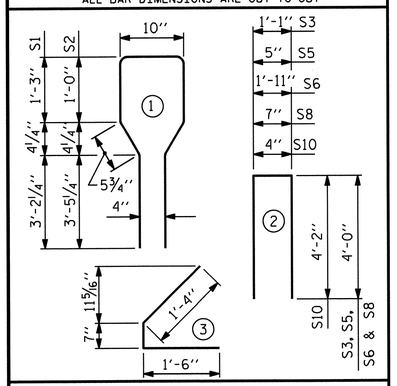

QUANTITIES FOR ONE GIRDER

	REINFORCING STEEL LB.	5000 PSI CONCRETE C.Y.	0.6" Ø L.R. STRANDS No.
EXT. GDR.	1345	15.5	26
INT. GDR.	1387	15.5	26

GIRDERS REQUIRED

NUMBER	LENGTH	TOTAL LENGTH
5	76'- 4"	381'- 8"

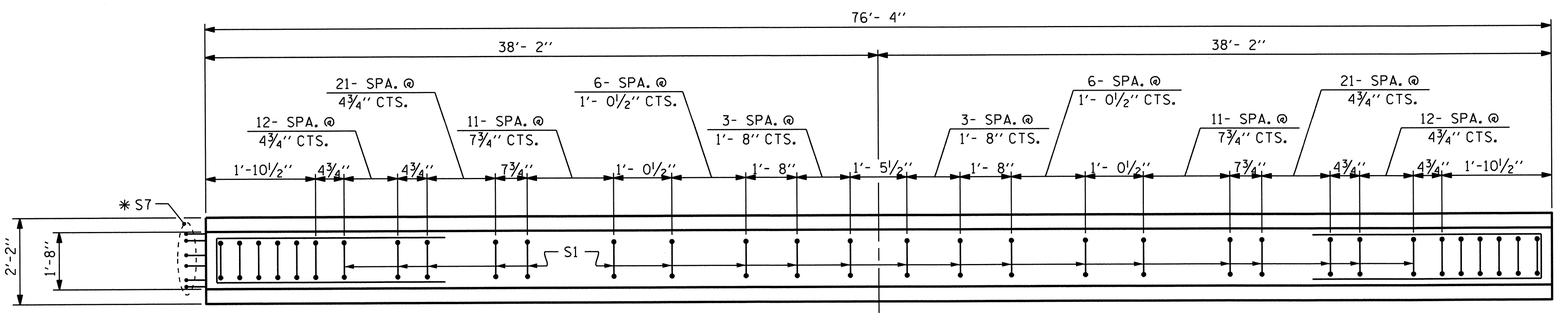

PLAN OF GIRDER

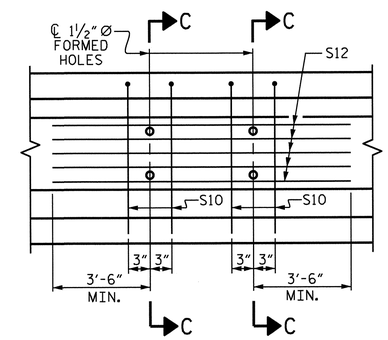

PARTIAL ELEVATION

SHOWING INTERMEDIATE DIAPHRAGM REINFORCING STEEL FOR GIRDER Nos. 2, 3 & 4

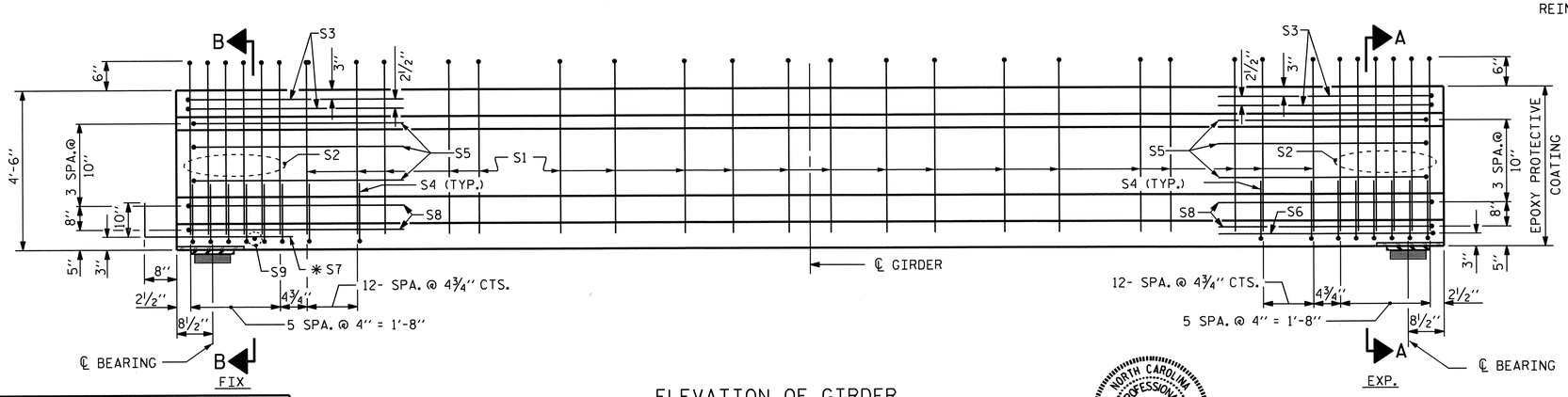

ELEVATION OF GIRDER

(SEE PARTIAL ELEVATION FOR ADDITIONAL "S" BARS)

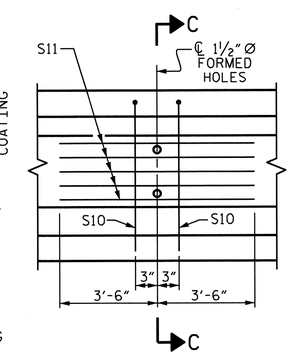

PARTIAL ELEVATION

SHOWING INTERMEDIATE DIAPHRAGM REINFORCING STEEL FOR GIRDER Nos. 1 & 5

PROJECT NO. R-2707B

CLEVELAND COUNTY

STATION: 247+90.66 -L-

STATE OF NORTH CAROLINA
DEPARTMENT OF TRANSPORTATION
RALEIGH

AASHTO TYPE IV PRESTRESSED CONCRETE GIRDER CONTINUOUS FOR LIVE LOAD (SPAN B) (LEFT LANE)

DESIGN ENGINEER OF RECORD: S.T. CHAMPION	DATE : 5-13-13
ASSEMBLED BY : D. A. GLADDEN	DATE : 10-25-10
CHECKED BY : H. T. BARBOUR	DATE : 1-5-12
DRAWN BY : ELR 8/91	REV. 7/17/98 RWW/LES
CHECKED BY : GRP 8/91	REV. 10/17/00R RWW/LES
	REV. 5/1/06R TLA/GM

REVISIONS

NO.	BY:	DATE:	NO.	BY:	DATE:
1			3		
2			4		

SHEET NO. S-12

TOTAL SHEETS 266

STR. #1

STD. NO. PCG6

NORTH CAROLINA PROFESSIONAL SEAL 15825 ENGINEER BRUCE D. KLAPPENBACH 6-27-2013

27-JUN-2013 10:05
R:\Structures\Plans\Bailey\STRland2\dgladden\Microstation\R2707B_SD_STR1.dgn
bklappenbach

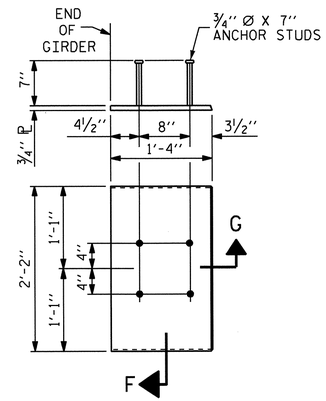

EMBEDDED PLATE "B-1" DETAILS FOR AASHTO TYPE IV GIRDER

(2 REQ'D PER GIRDER)

NOTES

ALL PRESTRESSING STRANDS SHALL BE 7-WIRE LOW-RELAXATION GRADE 270 STRANDS AND SHALL CONFORM TO AASHTO M203 EXCEPT FOR SAMPLING REQUIREMENTS WHICH SHALL BE IN ACCORDANCE WITH THE STANDARD SPECIFICATIONS.

ALL REINFORCING STEEL SHALL BE GRADE 60.

APPLY EPOXY PROTECTIVE COATING TO END OF GIRDER SURFACES INDICATED IN ELEVATION VIEW.

EMBEDDED PLATE "B-1" SHALL BE GALVANIZED IN ACCORDANCE WITH THE STANDARD SPECIFICATIONS. BEVEL EDGES OF PLATE "B-1" TO GIVE CLOSE FIT BUT NOT TIGHT FIT TO STEEL CASTING FORM.

ANCHOR STUDS SHALL CONFORM TO AASHTO M169 GRADES 1010 THROUGH 1020 OR APPROVED EQUAL, AND SHALL MEET THE TYPE "B" REQUIREMENTS OF SUBSECTION 7.3 OF THE ANSI/AASHTO/AWS D1.5 BRIDGE WELDING CODE.

AT ENDS OF GIRDERS TO BE EMBEDDED IN CONCRETE DIAPHRAGMS OR END WALLS, PRESTRESSING STRANDS MAY EXTEND A MAXIMUM OF 2" BEYOND THE GIRDER ENDS. OTHERWISE, PRESTRESSING STRANDS SHALL BE CUT FLUSH WITH THE GIRDER ENDS.

THE TRANSFER OF LOAD FROM THE ANCHORAGES TO THE GIRDER SHALL BE DONE WHEN CONCRETE HAS REACHED A COMPRESSIVE STRENGTH OF NOT LESS THAN 4000 PSI.

DEPENDING ON THE TYPE OF SYSTEM USED TO SUPPORT THE DECK SLAB FORMS, PRESET ANCHORS MAY BE NECESSARY IN THE PRESTRESSED CONCRETE GIRDER.

THE TOP SURFACE OF THE GIRDER, EXCLUDING THE OUTSIDE 4", SHALL BE RAKED TO A DEPTH OF 1/4".

THE CONTRACTOR HAS THE OPTION TO PROVIDE, AT NO ADDITIONAL COST TO THE DEPARTMENT, 2 ADDITIONAL STRANDS AT THE TOP OF THE GIRDER TO FACILITATE TYING OF THE REINFORCING STEEL. THESE STRANDS SHALL BE PULLED TO A LOAD OF 4500 lbs.

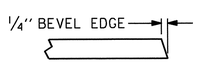

SECTION "G"

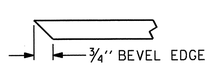

SECTION "F"

(SEE NOTES)

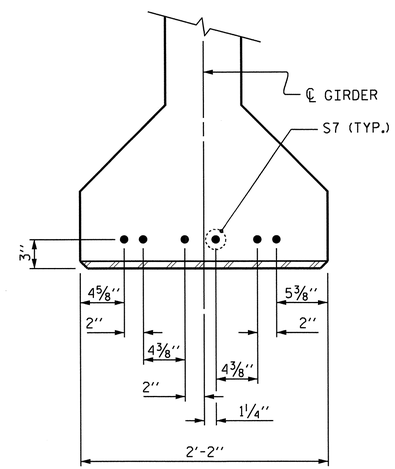

DETAIL "A"

(FOR AASHTO TYPE IV GIRDERS)

PROJECT NO. R-2707B

CLEVELAND COUNTY

STATION: 247+90.66 -L-

STATE OF NORTH CAROLINA
DEPARTMENT OF TRANSPORTATION
RALEIGH

STANDARD

PRESTRESSED CONCRETE GIRDER CONTINUOUS FOR LIVE LOAD DETAILS (LEFT LANE)

NORTH CAROLINA PROFESSIONAL SEAL 15825 ENGINEER BRUCE D. KLAPPENBACH

6-27-2013

REVISIONS						SHEET NO.
NO.	BY:	DATE:	NO.	BY:	DATE:	S-13
1			3			TOTAL SHEETS
2			4			266

DESIGN ENGINEER OF RECORD: S.T. CHAMPION DATE : 5-13-13		
ASSEMBLED BY : D. A. GLADDEN DATE : 10-25-10 CHECKED BY : H. T. BARBOUR DATE : 1-5-12		
DRAWN BY : ELR 11/91 CHECKED BY : GRP 11/91	REV. 10/17/00 RWW/LES REV. 7/10/01RR LES/RDR REV. 5/1/06 TLA/GM	

STR. #1

STD. NO. PCG9

27-JUN-2013 10:05
R:\Structures\Plans\Bailey\STRland2\dgladden\Microstation\R2707B_SD_STR1.dgn
bklappenbach

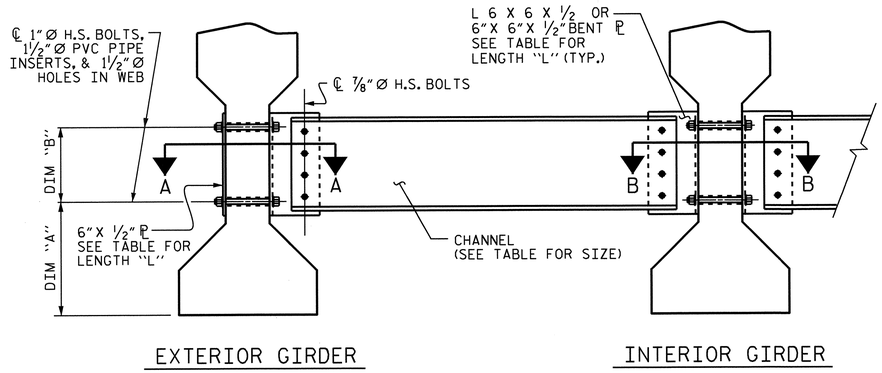

PART SECTION AT INTERMEDIATE DIAPHRAGM

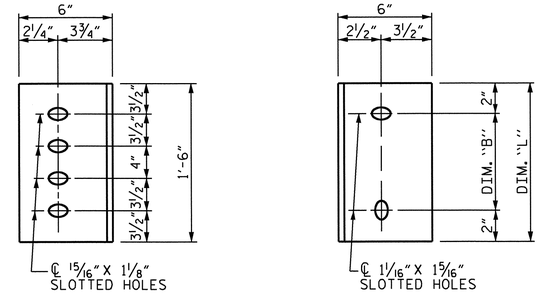

DIAPHRAGM FACE

WEB FACE

CONNECTOR PLATE DETAILS

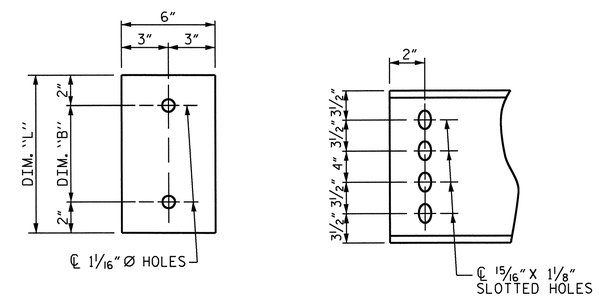

PLATE DETAILS

CHANNEL END

STRUCTURAL STEEL NOTES

ALL INTERMEDIATE DIAPHRAGM STEEL AND CONNECTOR PLATES SHALL BE AASHTO M270 GRADE 50 OR APPROVED EQUAL.

TENSION ON THE ASTM A325 BOLTS THROUGH THE CHANNEL MEMBER SHALL BE CALIBRATED USING DIRECT TENSION INDICATOR WASHERS IN ACCORDANCE WITH THE STANDARD SPECIFICATIONS.

TENSION ON THE ASTM A449 BOLTS THROUGH THE GIRDER WEB SHALL BE SNUG TIGHTENED FOLLOWED BY AN ADDITIONAL ¼ TURN.

THE PLATES, BENT PLATES, CHANNELS, AND ANGLES SHALL BE GALVANIZED OR METALLIZED IN ACCORDANCE WITH THE STANDARD SPECIFICATIONS. FOR THERMAL SPRAYED COATINGS (METALLIZATION), SEE SPECIAL PROVISIONS.

FOR METALLIZATION, APPLY AN 8 MIL THICK 99.99 PERCENT ZINC (W-Zn-1) THERMAL SPRAYED COATING WITH A 0.5 MIL THICK SEAL COAT TO ALL STEEL DIAPHRAGM SURFACES IN ACCORDANCE WITH THE THERMAL SPRAYED COATINGS SPECIAL PROVISION AND SECTION 442 OF THE STANDARD SPECIFICATIONS.

GALVANIZE THE HIGH STRENGTH BOLTS, NUTS, WASHERS AND DIRECT TENSION INDICATORS IN ACCORDANCE WITH THE STANDARD SPECIFICATIONS.

USE AN ASTM F436 HARDENED WASHER WITH STANDARD AND SLOTTED HOLES UNDER EACH BOLT HEAD AND NUT.

FOR BOLTS THROUGH THE GIRDER WEB, PROVIDE SUFFICIENT LENGTH OF THREADS ON ALL BOLTS TO ACCOMMODATE WASHERS AND THE THICKNESS OF CONNECTING MEMBER PLUS AT LEAST ¼" PROJECTION BEYOND THE NUT.

INTERMEDIATE DIAPHRAGM ASSEMBLY SHALL COMPLY WITH SECTION 1072 OF THE STANDARD SPECIFICATIONS.

SUBMIT TWO SETS OF WORKING DRAWINGS FOR THE INTERMEDIATE DIAPHRAGM ASSEMBLY FOR REVIEW, COMMENTS AND ACCEPTANCE. AFTER REVIEW, COMMENTS, AND ACCEPTANCE, SUBMIT SEVEN SETS FOR DISTRIBUTION.

IN THE EXTERIOR BAYS, PLACE TEMPORARY STRUTS BETWEEN PRESTRESSED GIRDERS ADJACENT TO THE STEEL DIAPHRAGMS. STRUTS SHALL REMAIN IN PLACE 3 DAYS AFTER CONCRETE IS PLACED.

THE COST OF THE STEEL DIAPHRAGMS AND ASSEMBLIES SHALL BE INCLUDED IN THE UNIT PRICE BID FOR PRESTRESSED CONCRETE GIRDERS.

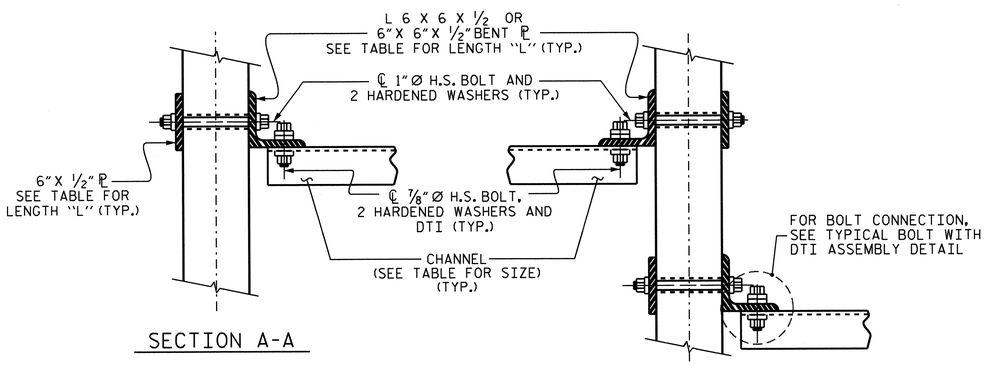

CONNECTION DETAILS

TABLE

GIRDER TYPE	CHANNEL SIZE	DIM "A"	DIM "B"	DIM "L"
IV	MC 18 x 42.7	1'-9½"	1'-2"	1'-6"

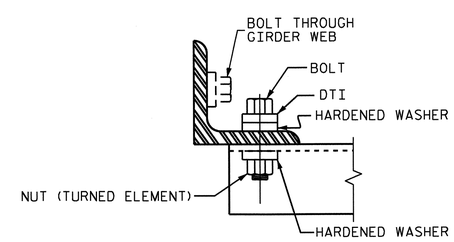

BOLT WITH DTI ASSEMBLY DETAIL

PROJECT NO. R-2707B

CLEVELAND COUNTY

STATION: 247+90.66 -L-

STATE OF NORTH CAROLINA
DEPARTMENT OF TRANSPORTATION
RALEIGH

STANDARD

INTERMEDIATE STEEL DIAPHRAGMS FOR TYPE II, III, & IV PRESTRESSED CONCRETE GIRDERS

NORTH CAROLINA PROFESSIONAL SEAL 15825 BRIDGE ENGINEER BRIAN D. KLAPPENBACH 6-27-2013

REVISIONS						SHEET NO.
NO.	BY:	DATE:	NO.	BY:	DATE:	S-14
1			3			TOTAL SHEETS
2			4			266

DESIGN ENGINEER OF RECORD: - DATE : -

ASSEMBLED BY : D. A. GLADDEN DATE : 10-25-10
CHECKED BY : H. T. BARBOUR DATE : 1-5-12

DRAWN BY : TLA 6/05
CHECKED BY : VC 6/05

ADDED 10/21/05
REV. 5/1/06 RRR KMM/GM
REV. 10/1/11 MAA/GM

14-MAY-2013 09:22
R:\Structures\Plans\Bailey\STRIand2\dgladden\Microstation\R2707B_SD_STRI.dgn
dgladden

STR. #1

STD. NO. PCG10

DEAD LOAD DEFLECTION TABLE FOR GIRDERS

0.6"Ø LOW RELAXATION	SPAN "A"																																
	GIRDER #1											GIRDER #2, #3 & #4											GIRDER #5										
TENTH POINTS	0	.1	.2	.3	.4	.5	.6	.7	.8	.9	0	0	.1	.2	.3	.4	.5	.6	.7	.8	.9	0	0	.1	.2	.3	.4	.5	.6	.7	.8	.9	0
CAMBER (GIRDER ALONE IN PLACE) ↑	0	0.027	0.050	0.069	0.081	0.085	0.081	0.069	0.050	0.027	0	0	0.027	0.050	0.069	0.081	0.085	0.081	0.069	0.050	0.027	0	0	0.027	0.050	0.069	0.081	0.085	0.081	0.069	0.050	0.027	0
* DEFLECTION DUE TO SUPERIMPOSED D.L. ↓	0	0.014	0.027	0.036	0.043	0.045	0.043	0.036	0.027	0.014	0	0	0.016	0.030	0.041	0.048	0.051	0.048	0.041	0.030	0.016	0	0	0.014	0.027	0.037	0.043	0.045	0.043	0.037	0.027	0.014	0
FINAL CAMBER ↑	0	1/8	5/16	3/8	7/16	1/2	7/16	3/8	5/16	1/8	0	0	1/8	1/4	5/16	3/8	7/16	3/8	5/16	1/4	1/8	0	0	1/8	5/16	3/8	7/16	1/2	7/16	3/8	5/16	1/8	0

* INCLUDES FUTURE WEARING SURFACE IN SUPERIMPOSED DEAD LOAD.
ALL VALUES ARE SHOWN IN FEET (DECIMAL FORM), EXCEPT "FINAL CAMBER", WHICH IS GIVEN IN INCHES (FRACTION FORM).

DEAD LOAD DEFLECTION TABLE FOR GIRDERS

0.6"Ø LOW RELAXATION	SPAN "B"																																
	GIRDER #1											GIRDER #2, #3 & #4											GIRDER #5										
TENTH POINTS	0	.1	.2	.3	.4	.5	.6	.7	.8	.9	0	0	.1	.2	.3	.4	.5	.6	.7	.8	.9	0	0	.1	.2	.3	.4	.5	.6	.7	.8	.9	0
CAMBER (GIRDER ALONE IN PLACE) ↑	0	0.054	0.102	0.140	0.164	0.172	0.164	0.140	0.102	0.054	0	0	0.054	0.102	0.140	0.164	0.172	0.164	0.140	0.102	0.054	0	0	0.054	0.102	0.140	0.164	0.172	0.164	0.140	0.102	0.054	0
* DEFLECTION DUE TO SUPERIMPOSED D.L. ↓	0	0.024	0.045	0.062	0.072	0.076	0.072	0.062	0.045	0.024	0	0	0.027	0.051	0.070	0.082	0.086	0.082	0.070	0.051	0.027	0	0	0.024	0.045	0.062	0.073	0.076	0.073	0.062	0.045	0.024	0
FINAL CAMBER ↑	0	3/8	11/16	15/16	1 1/8	1 1/8	1 1/8	15/16	11/16	3/8	0	0	5/16	5/8	13/16	1	1	1	13/16	5/8	5/16	0	0	3/8	11/16	15/16	1 1/16	1 1/8	1 1/16	15/16	11/16	3/8	0

* INCLUDES FUTURE WEARING SURFACE IN SUPERIMPOSED DEAD LOAD.
ALL VALUES ARE SHOWN IN FEET (DECIMAL FORM), EXCEPT "FINAL CAMBER", WHICH IS GIVEN IN INCHES (FRACTION FORM).

PROJECT NO. R-2707B
CLEVELAND COUNTY
STATION: 247+90.66 -L-

STATE OF NORTH CAROLINA
DEPARTMENT OF TRANSPORTATION
RALEIGH

SUPERSTRUCTURE
DEAD LOAD
DEFLECTIONS
(LEFT LANE)

NORTH CAROLINA PROFESSIONAL SEAL 16825 ENGINEER BRUCE D. KLAPPENBACH
6-27-2013

REVISIONS						SHEET NO.
NO.	BY:	DATE:	NO.	BY:	DATE:	S-15
1			3			TOTAL SHEETS
2			4			266

DRAWN BY : D. A. GLADDEN DATE : 10-21-10
CHECKED BY : H. T. BARBOUR DATE : 1-5-12
DESIGN ENGINEER OF RECORD: S.T. CHAMPION DATE : 5-13-13

24-JUN-2013 09:57
R:\Structures\Plans\Bailey\STRland2\dgladden\Microstation\R2707B_SD_STR1.dgn
dgladden

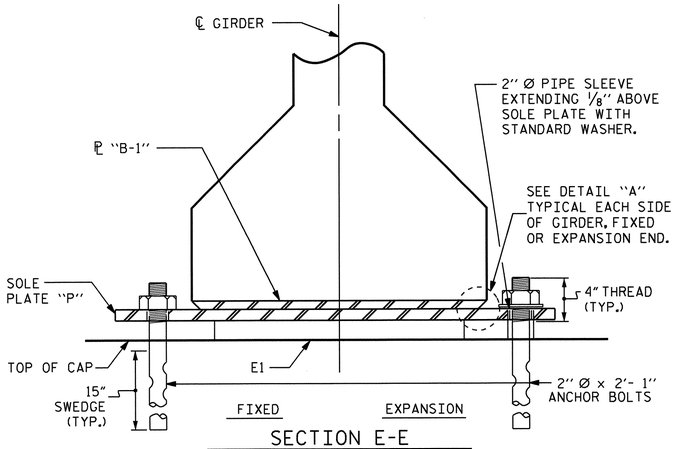

SECTION E-E

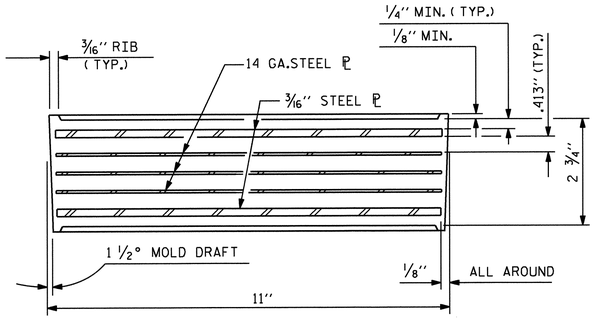

TYPICAL SECTION OF ELASTOMERIC BEARINGS

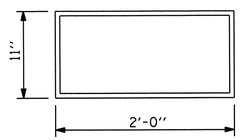

E1 (20 REQ'D)

PLAN VIEW OF ELASTOMERIC BEARING

TYPE VII

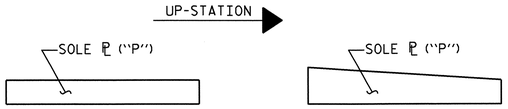

SOLE ℗ PLACEMENT DETAIL

NOTES

AT ALL FIXED POINTS OF SUPPORT, NUTS FOR ANCHOR BOLTS ARE TO BE TIGHTENED FINGER TIGHT AND THEN BACKED OFF 1/2 TURN. THE THREAD OF THE NUT AND BOLT SHALL THEN BE BURRED WITH A SHARP POINTED TOOL.

THE 2" Ø PIPE SLEEVE SHALL BE CUT FROM SCHEDULE 40 PVC PLASTIC PIPE. THE PVC PLASTIC PIPE SHALL MEET THE REQUIREMENTS OF ASTM D1785.

STEEL SOLE PLATES, ANCHOR BOLTS, NUTS, AND WASHERS SHALL BE GALVANIZED IN ACCORDANCE WITH THE STANDARD SPECIFICATIONS.

PRIOR TO WELDING, GRIND THE GALVANIZED SURFACE OF THE PORTION OF THE EMBEDDED PLATE AND SOLE PLATE THAT ARE TO BE WELDED. AFTER WELDING, DAMAGED GALVANIZED SURFACES SHALL BE REPAIRED IN ACCORDANCE WITH THE STANDARD SPECIFICATIONS.

WHEN WELDING THE SOLE PLATE TO THE EMBEDDED PLATE IN THE GIRDER, USE TEMPERATURE INDICATING WAX PENS, OR OTHER SUITABLE MEANS, TO ENSURE THAT THE TEMPERATURE OF THE SOLE PLATE DOES NOT EXCEED 300°F. TEMPERATURES ABOVE THIS MAY DAMAGE THE ELASTOMER.

SOLE PLATE "P", BOLTS, NUTS, WASHERS, AND PIPE SLEEVE SHALL BE INCLUDED IN THE PAY ITEM FOR PRESTRESSED CONCRETE GIRDERS.

ANCHOR BOLTS SHALL MEET THE REQUIREMENTS OF ASTM A449. NUTS SHALL MEET THE REQUIREMENTS OF AASHTO M291-DH OR AASHTO M292-2H. WASHERS SHALL MEET THE REQUIREMENTS OF AASHTO M293. SHOP DRAWINGS ARE NOT REQUIRED FOR ANCHOR BOLT, NUTS AND WASHERS. SHOP INSPECTION IS REQUIRED.

ALL SURFACES OF BEARING PLATES SHALL BE SMOOTH AND STRAIGHT.

FOR STEEL REINFORCED ELASTOMERIC BEARINGS, SEE SPECIAL PROVISIONS.

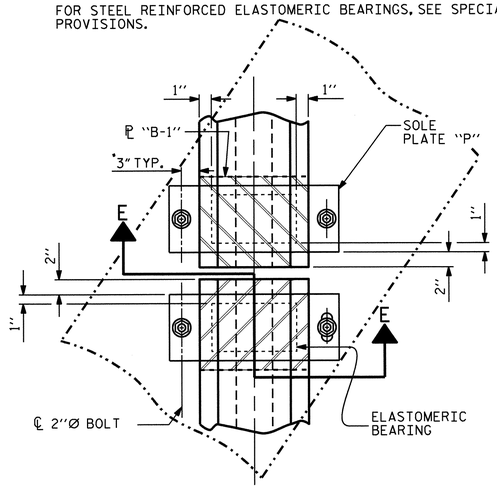

TYPICAL HALF-PLAN (SHOWING CONTINUOUS BENT)

TYPICAL HALF-PLAN (SHOWING SIMPLE SPAN BENT)

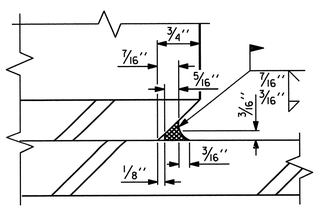

DETAIL "A"

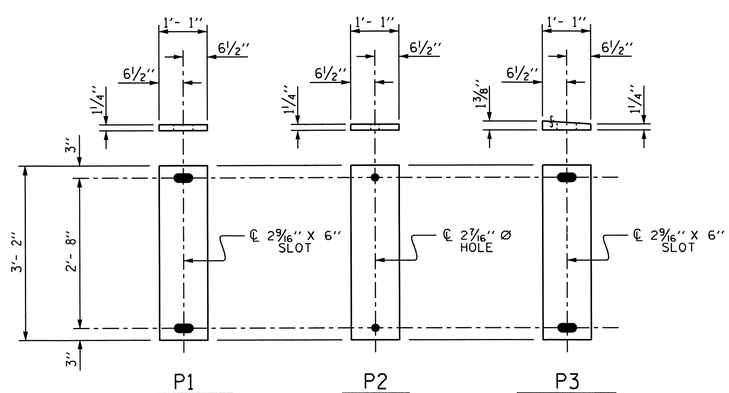

P1 (EXPANSION) (5 REQ'D)

P2 (FIXED) (10 REQ'D)

P3 (EXPANSION) (5 REQ'D)

SOLE PLATE DETAILS ("P")

— LOAD RATINGS —	
	MAX.D.L.+L.L.
54"PCG -TYPE VII	264 K

PROJECT NO. R-2707B

CLEVELAND COUNTY

STATION: 247+90.66 -L-

STATE OF NORTH CAROLINA
DEPARTMENT OF TRANSPORTATION
RALEIGH

STANDARD

ELASTOMERIC BEARING DETAILS

PRESTRESSED CONCRETE GIRDER SUPERSTRUCTURE (LEFT LANE)

NORTH CAROLINA PROFESSIONAL SEAL 15821 BRIDGE ENGINEER BRIAN D. KLAPPENBACH
6-27-2013

DESIGN ENGINEER OF RECORD: S.T. CHAMPION DATE : 5-13-13		
ASSEMBLED BY : D. A. GLADDEN DATE : 10-25-10		
CHECKED BY : H. T. BARBOUR DATE : 1-5-12		
DRAWN BY : WJH 8/89	REV. 10/17/00	RWW/LES
CHECKED BY : CRK 8/89	REV. 7/10/01	RWW/LES
	REV. 5/1/06	TLA/GM

REVISIONS						SHEET NO.
NO.	BY:	DATE:	NO.	BY:	DATE:	S-16
1			3			TOTAL SHEETS
2			4			266

STR. #1

STD. NO. EB3

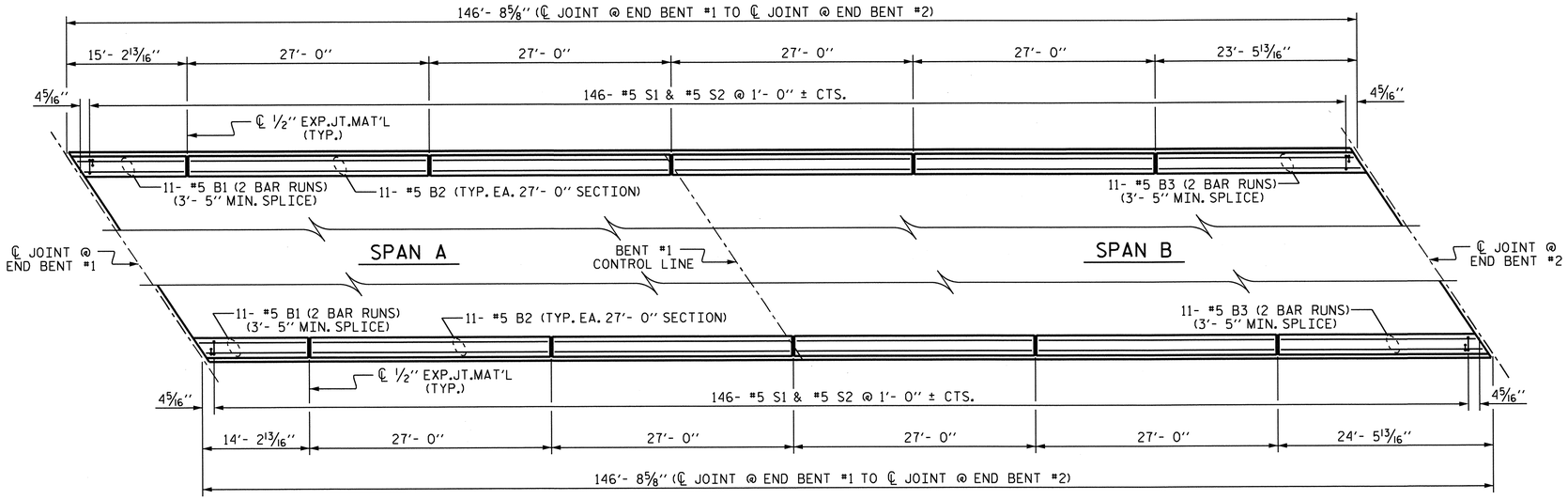

PLAN OF BARRIER RAIL

BAR TYPES

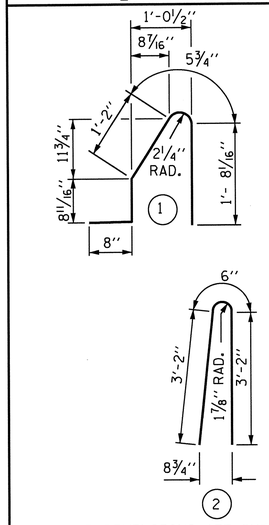

ALL BAR DIMENSIONS ARE OUT TO OUT

BILL OF MATERIAL

FOR CONCRETE BARRIER RAIL ONLY

BAR	NO.	SIZE	TYPE	LENGTH	WEIGHT
* B1	44	#5	STR	9'- 1"	417
* B2	88	#5	STR	26'- 7"	2440
* B3	44	#5	STR	13'- 8"	627
* S1	292	#5	1	4'- 9"	1447
* S2	292	#5	2	6'- 10"	2081

* EPOXY COATED REINFORCING STEEL		7012 LBS.
CLASS AA CONCRETE	39.9	CU. YDS.
CONCRETE BARRIER RAIL	293.44	LIN. FT.

NOTES

THE BARRIER RAIL IN EACH SPAN SHALL NOT BE CAST UNTIL ALL SLAB CONCRETE IN THAT SPAN HAS BEEN CAST AND HAS REACHED A MINIMUM COMPRESSIVE STRENGTH OF 3,000 PSI.

ALL REINFORCING STEEL IN BARRIER RAILS SHALL BE EPOXY COATED.

GROOVED CONTRACTION JOINTS, 1/2" IN DEPTH, SHALL BE TOOLED IN ALL EXPOSED FACES OF THE BARRIER RAIL AND IN ACCORDANCE WITH ARTICLE 825-10(B) OF THE STANDARD SPECIFICATIONS. THE CONTRACTION JOINT SHALL BE LOCATED AT EACH THIRD POINT BETWEEN BARRIER RAIL EXPANSION JOINTS. ONLY ONE CONTRACTION JOINT IS REQUIRED AT MIDPOINT OF BARRIER RAIL SEGMENTS LESS THAN 20 FEET IN LENGTH AND NO CONTRACTION JOINTS ARE REQUIRED FOR THOSE SEGMENTS LESS THAN 10 FEET IN LENGTH.

FOR BARRIER RAIL ON APPROACH SLABS, SEE "BRIDGE APPROACH SLAB DETAILS" SHEET.

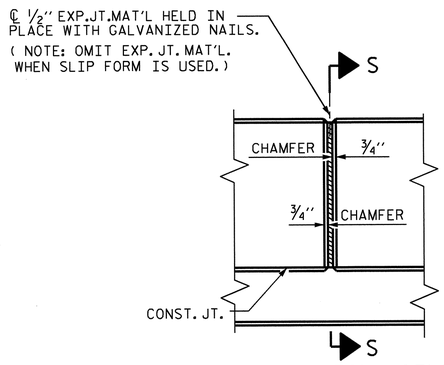

ELEVATION AT EXPANSION JOINTS

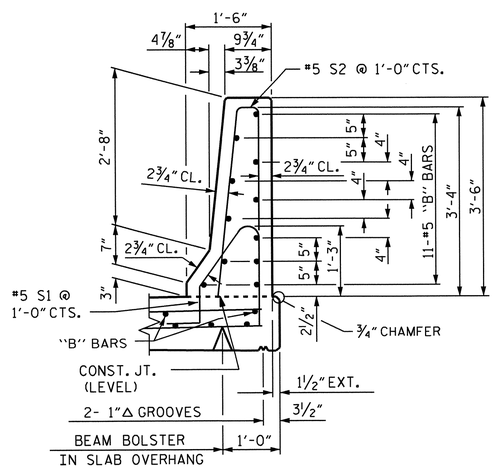

SECTION THRU RAIL

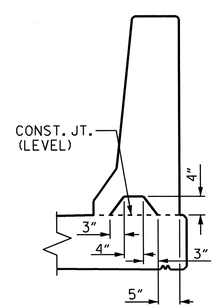

SECTION S-S

AT DAM IN OPEN JOINT (THIS IS TO BE USED ONLY WHEN SLIP FORM IS USED)

BARRIER RAIL DETAILS

PROJECT NO. R-2707B

CLEVELAND COUNTY

STATION: 247+90.66 -L-

STATE OF NORTH CAROLINA
DEPARTMENT OF TRANSPORTATION
RALEIGH

CONCRETE BARRIER RAIL (LEFT LANE)

NORTH CAROLINA PROFESSIONAL SEAL 15825 ENGINEER BRIAN D. KLAPPENBACH
6-27-2013

REVISIONS						SHEET NO.
NO.	BY:	DATE:	NO.	BY:	DATE:	S-17
1			3			TOTAL SHEETS
2			4			266

DESIGN ENGINEER OF RECORD: - DATE : -

ASSEMBLED BY : D. A. GLADDEN DATE : 10-27-10
CHECKED BY : H. T. BARBOUR DATE : 1-5-12

DRAWN BY :	ARB	5/87	REV. 10/17/00	RWW/LES
CHECKED BY :	SJD	9/87	REV. 5/7/03R	RWW/JTE
			REV. 5/1/06R	TLA/GM

24-JUN-2013 09:57
R:\Structures\Plans\Bailey\STRland2\dgladden\Microstation\R2707B_SD_STR1.dgn
dgladden

STR. #1

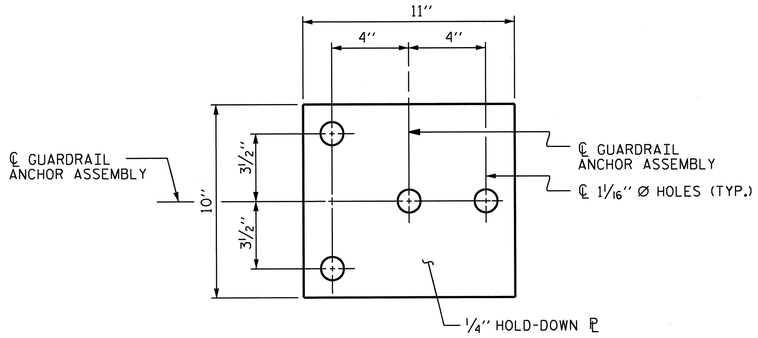

PLAN

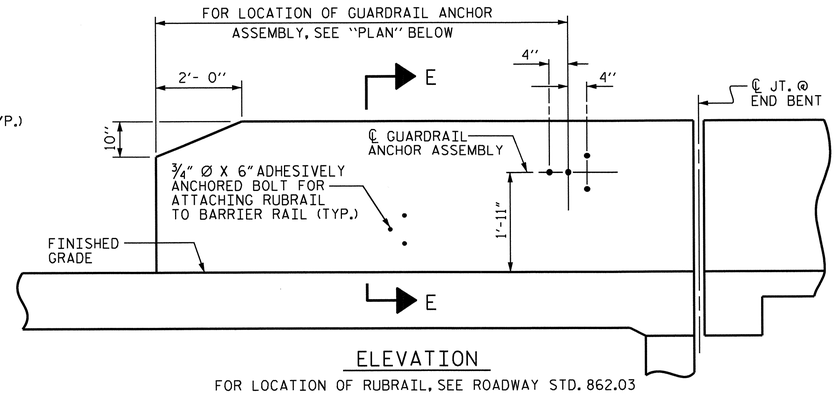

ELEVATION

FOR LOCATION OF RUBRAIL, SEE ROADWAY STD. 862.03

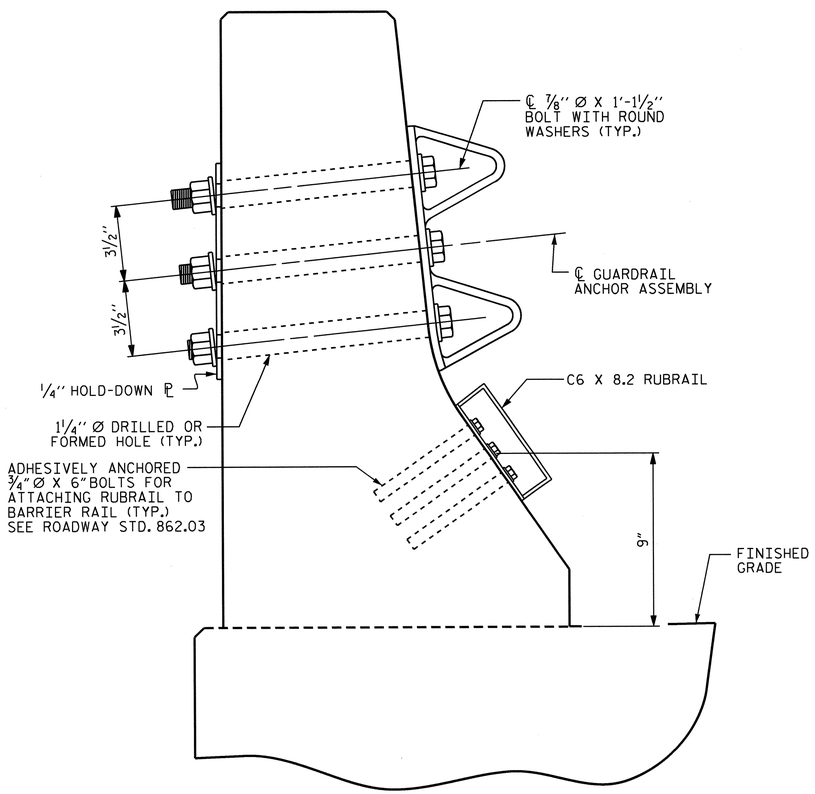

SECTION E-E

GUARDRAIL ANCHOR ASSEMBLY DETAILS

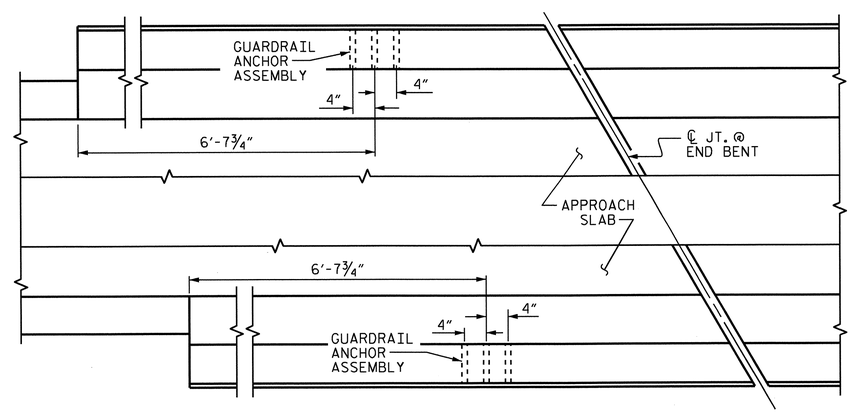

PLAN

LOCATION OF ANCHORS FOR GUARDRAIL

END BENT #1 SHOWN, END BENT #2 SIMILAR.

NOTES

THE GUARDRAIL ANCHOR ASSEMBLY SHALL CONSIST OF A 1/4'' HOLD-DOWN PLATE AND 4 - 7/8'' Ø BOLTS WITH NUTS AND WASHERS, RUBRAIL, AND ADHESIVELY ANCHORED BOLTS.

THE HOLD-DOWN PLATE SHALL CONFORM TO AASHTO M270 GRADE 36. AFTER FABRICATION, THE HOLD-DOWN PLATE SHALL BE HOT-DIP GALVANIZED IN ACCORDANCE WITH AASHTO M111.

BOLTS SHALL CONFORM TO THE REQUIREMENTS OF ASTM A307 AND NUTS SHALL CONFORM TO THE REQUIREMENTS OF AASHTO M291. BOLTS, NUTS AND WASHERS SHALL BE GALVANIZED. (AT THE CONTRACTOR'S OPTION, STAINLESS STEEL BOLTS, NUTS AND WASHERS MAY BE USED AS AN ALTERNATE FOR THE 7/8'' Ø GALVANIZED BOLTS, NUTS AND WASHERS. THEY SHALL CONFORM TO OR EXCEED THE MECHANICAL REQUIREMENTS OF ASTM A307. THE USE OF THIS ALTERNATE SHALL BE APPROVED BY THE ENGINEER.)

THE GUARDRAIL ANCHOR ASSEMBLY IS REQUIRED AT ALL POINTS WHERE APPROACH GUARDRAIL IS TO BE ATTACHED TO THE END OF BARRIER RAIL. FOR POINTS OF ATTACHMENT, SEE SKETCH.

AFTER INSTALLATION, THE EXPOSED THREAD OF THE BOLT SHALL BE BURRED WITH A SHARP POINTED TOOL.

THE COST OF THE GUARDRAIL ANCHOR ASSEMBLY SHALL BE INCLUDED IN THE UNIT CONTRACT PRICE BID FOR CONCRETE BARRIER RAIL.

THE 1 1/4'' Ø HOLES SHALL BE FORMED OR DRILLED WITH A CORE BIT. IMPACT TOOLS WILL NOT BE PERMITTED. ANY CONCRETE DAMAGED BY THIS WORK SHALL BE REPAIRED TO THE SATISFACTION OF THE ENGINEER.

THE C6 X 8.2 RUBRAIL IS TO BE ADHESIVELY ANCHORED TO THE RAIL USING THREE 3/4" Ø X 6" BOLTS WITH WASHERS. LEVEL ONE FIELD TESTING IS REQUIRED, AND THE YIELD LOAD OF THE 3/4" Ø BOLT IS 12 KIPS. FOR ADHESIVELY ANCHORED ANCHOR BOLTS OR DOWELS, SEE STANDARD SPECIFICATIONS. SEE ROADWAY STANDARD 862.03 FOR DETAILS AND LOCATION OF THE RUBRAIL.

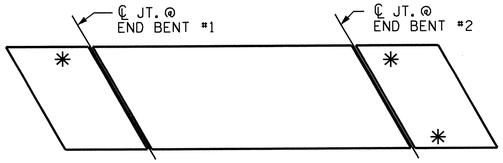

SKETCH SHOWING POINTS OF ATTACHMENTS

* DENOTES GUARDRAIL ANCHOR ASSEMBLY

PROJECT NO. R-2707B
CLEVELAND COUNTY
STATION: 247+90.66 -L-

STATE OF NORTH CAROLINA
DEPARTMENT OF TRANSPORTATION
RALEIGH

STANDARD
GUARDRAIL ANCHORAGE FOR BARRIER RAIL (LEFT LANE)

NORTH CAROLINA PROFESSIONAL SEAL 15825 ENGINEER D. KL APPENBACH
6-27-2013

REVISIONS								SHEET NO.
NO.	BY:	DATE:	NO.	BY:	DATE:			S-18
1			3					TOTAL SHEETS
2			4					266

STR. #1 STD. NO. GRA2

DESIGN ENGINEER OF RECORD: - DATE : -	
ASSEMBLED BY D. A. GLADDEN	DATE : 10-27-10
CHECKED BY : H. T. BARBOUR	DATE : 1-5-12
DRAWN BY : TLA 5/06	ADDED 5/1/06RR KMM/GM
CHECKED BY : GM 5/06	REV. 10/1/11 MAA/GM

24-JUN-2013 09:58
R:\Structures\Plans\Bailey\STRIand2\dgladden\Microstation\R2707B_SD_STR1.dgn
dgladden

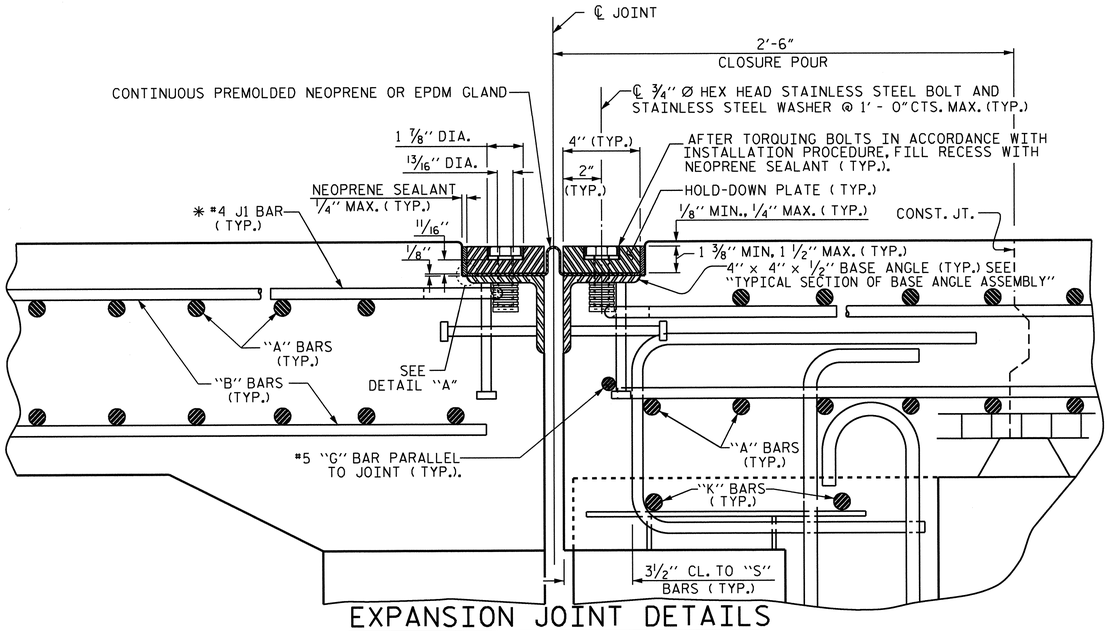

EXPANSION JOINT DETAILS

SECTION NORMAL TO JOINT -- PRESTRESSED GIRDER SUPERSTRUCTURE

* THE QUANTITY OF #4 J1 BARS ON THE BILL OF MATERIAL IS BASED ON 1'-0" CENTERS. J1 BARS SHALL BE PLACED AT EACH VERTICAL STUD ANCHOR BOLT. IN THE EVENT THAT THE NUMBER OF VERTICAL STUD ANCHORS EXCEEDS THE NUMBER OF J1 BARS SPECIFIED, ADDITIONAL J1 BARS WILL NOT BE REQUIRED.

INSTALLATION PROCEDURE

1. A TEMPLATE OR OTHER SUITABLE DEVICE SHALL BE USED TO FORM THE TOP OF THE EXPANSION JOINT SEAL BLOCKOUT TO THE PROPER DEPTH AND WIDTH. THE TEMPLATE SHALL BE 4 1/8" TO 4 1/4" WIDE AND OF SUCH THICKNESS AS TO PROVIDE FOR CORRECT FINAL ELEVATION OF TOP OF HOLD-DOWN PLATES. THE TEMPLATE SHALL BE ATTACHED TO THE BASE ANGLE ASSEMBLY WITH THE 3/4" Ø HEX HEAD BOLTS PROVIDED FOR THE HOLD-DOWN PLATES. A 1" Ø HOLE SHALL BE PROVIDED IN THE TEMPLATE CENTERED OVER EACH WEEP HOLE IN THE 4" X 4" X 1/2" BASE ANGLE. OTHER METHODS OF INSURING DRAINAGE THROUGH WEEP HOLES MAY BE EMPLOYED SUBJECT TO ENGINEER'S APPROVAL.
2. AFTER THE CONCRETE HAS BEEN CAST ON BOTH SIDES OF THE JOINT, REMOVE THE TEMPLATE. THOROUGHLY CLEAN THE BOLT HOLES AND THE ANGLE PLATE. REMOVE ANY EXCESS CONCRETE THAT COMES OUT OF THE WEEP HOLES. ANY DAMAGED STEEL SHALL BE COATED WITH A MINIMUM THICKNESS OF 4 DRY MILS OF ZINC-RICH PAINT IN ACCORDANCE WITH THE STANDARD SPECIFICATIONS.
3. LAY THE GLAND ON THE BASE ANGLE AND FIELD MARK THE GLAND FOR THE BOLT HOLES. HOLES IN THE GLAND SHALL BE PUNCHED 7/8" IN DIAMETER WITH A HAND PUNCH.
4. IN ORDER TO CHECK FOR PROPER ALIGNMENT, PLACE THE GLAND AND HOLD-DOWN PLATES ON THE BASE ANGLE. DO NOT APPLY NEOPRENE SEALANT. BOLT THE HOLD-DOWN PLATES TO THE BASE ANGLE BUT DO NOT TIGHTEN. THE ENGINEER SHALL INSPECT THE JOINT SEAL DEVICE FOR PROPER ALIGNMENT.
5. AFTER INSPECTION, REMOVE THE HOLD-DOWN PLATES AND GLAND. APPLY NEOPRENE SEALANT TO THE BASE ANGLE IN ACCORDANCE WITH THE "INSTALLATION SKETCH". PLACE GLAND AND HOLD-DOWN PLATES ON THE BASE ANGLE. BOLT THE HOLD-DOWN PLATES TO THE BASE ANGLE ASSEMBLY AND TORQUE THE BOLTS TO 88 FT-LBS WITH A TORQUE WRENCH. THE TORQUE WRENCH SHALL BE CALIBRATED IN ACCORDANCE WITH SECTION 440-10 (D) OF THE STANDARD SPECIFICATIONS. CHECK THE TORQUE AFTER THREE (3) HOURS AND, IF NECESSARY, RETIGHTEN TO 88 FT-LBS. A FINAL CHECK SHALL BE MADE AT SEVEN (7) DAYS. TORQUE SHALL NOT BE LESS THAN 80 FT-LBS AFTER SEVEN (7) DAYS.
6. AFTER PROPER TORQUING, CLEAN THE BOLT HOLE RECESSES AND THE RECESS BETWEEN THE JOINT SEAL DEVICE AND CONCRETE, COMPLETELY FILL THESE RECESSES WITH NEOPRENE SEALANT.

GENERAL NOTES

1. FOR EXPANSION JOINT SEALS, SEE SPECIAL PROVISIONS.
2. ALL PLATES AND ANGLES SHALL CONFORM TO AASHTO M270 GRADE 36 STEEL OR APPROVED EQUAL. ALL HOLD-DOWN BOLTS SHALL CONFORM TO ASTM F593 ALLOY 304 STAINLESS STEEL AND WASHERS SHALL CONFORM TO ASTM F844 EXCEPT THEY SHALL BE MADE FROM ALLOY 304 STAINLESS STEEL. ALL STUD ANCHORS SHALL CONFORM TO AASHTO M169, GRADES 1010 THRU 1020 OR APPROVED EQUAL. ALL CONCRETE INSERTS SHALL BE CLOSED END AND SHALL CONFORM TO AASHTO M169, GRADE 12L14. TENSILE CAPACITY SHALL BE 3000 LBS. MIN.
3. A PREMOLDED CORRUGATED OR NON-CORRUGATED GLAND SHALL BE USED FOR JOINTS SKEWED BETWEEN 50° THRU 130°. FOR JOINTS SKEWED LESS THAN 50° OR MORE THAN 130°, ONLY A CORRUGATED GLAND SHALL BE USED.
4. CLOSED END FERRULES AND STUD ANCHORS SHALL BE SHOP WELDED AND ALL HOLES SHALL BE SHOP DRILLED AS SHOWN ON PLANS. STUD ANCHORS SHALL BE ELECTRIC ARC END WELDED WITH COMPLETE FUSION.
5. SURFACES COMING IN CONTACT WITH NEOPRENE SHALL BE GROUND SMOOTH PRIOR TO METALLIZING.
6. UPON COMPLETION OF SHOP FABRICATION, THE HOLD DOWN PLATE AND BASE ANGLE ASSEMBLY, AS SHOWN IN THE "TYPICAL SECTION OF BASE ANGLE ASSEMBLY", SHALL BE METALLIZED. SEE SPECIAL PROVISION FOR THERMAL SPRAYED COATINGS (METALLIZATION).
7. BASE ANGLE ASSEMBLY SHALL BE CONTINUOUS FOR THE LENGTH OF THE JOINT. AT CROWN BREAKS, THE ENDS OF THE BASE ANGLE ASSEMBLY SHALL BE CUT PARALLEL TO THE BRIDGE CENTERLINE FOR SKEWS LESS THAN 80° AND GREATER THAN 100°. FINISHED WELD SHALL BE GROUND SMOOTH AND COATED WITH A MINIMUM THICKNESS OF 4 DRY MILS OF ZINC-RICH PAINT IN ACCORDANCE WITH THE STANDARD SPECIFICATIONS.
8. FIELD SPLICES OF HOLD-DOWN PLATES SHALL BE KEPT TO A MINIMUM. CONTRACTOR SHALL FURNISH DETAILED PLANS SHOWING PROPOSED SPLICE LOCATIONS FOR APPROVAL. HOLD-DOWN PLATES SHALL NOT EXCEED 20' LENGTHS UNLESS APPROVED BY THE ENGINEER.
9. NO ALTERNATE JOINT DETAILS SHALL BE PERMITTED IN LIEU OF THOSE SHOWN ON THESE PLANS.
10. THE CONTRACTOR MAY, AT HIS OPTION, USE ADHESIVELY ANCHORED ANCHOR BOLTS IN PLACE OF CONCRETE INSERTS FOR COVER PLATES. THE YIELD LOAD OF THE 3/4" Ø BOLT IS 10 KIPS. FIELD TESTING OF THE ADHESIVE BONDING SYSTEM IS NOT REQUIRED.

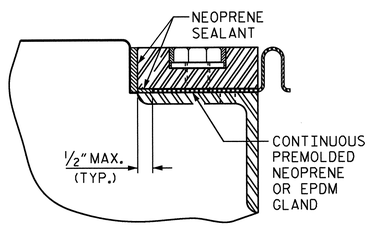

DETAIL "A"

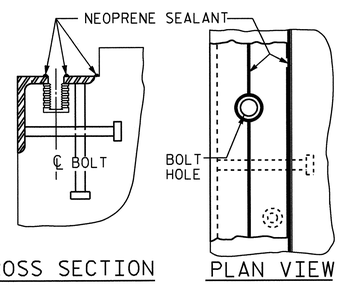

CROSS SECTION PLAN VIEW

INSTALLATION SKETCH

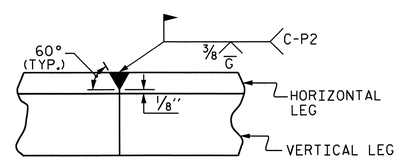

DETAIL- FIELD WELD SPLICE OF BASE ANGLE

MOVEMENT AND SETTING AT JOINT					
	SKEW ANGLE ANGLE	TOTAL MOVEMENT (ALONG ℄ RDWY)	PERPENDICULAR JOINT OPENING AT 45° F	PERPENDICULAR JOINT OPENING AT 60° F	PERPENDICULAR JOINT OPENING AT 90° F
END BENT #1	56°16'39"	5/8"	1 3/8"	1 1/4"	1 1/16"
END BENT #2	56°16'39"	5/8"	1 3/8"	1 1/4"	1 1/16"

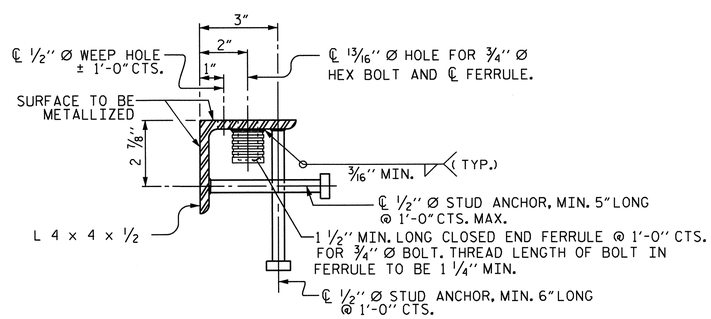

TYPICAL SECTION OF BASE ANGLE ASSEMBLY

PROJECT NO. R-2707B
CLEVELAND COUNTY
STATION: 247+90.66 -L-

SHEET 1 OF 3

STATE OF NORTH CAROLINA
DEPARTMENT OF TRANSPORTATION
RALEIGH

STANDARD

EXPANSION JOINT SEAL DETAILS (LEFT LANE)

NORTH CAROLINA PROFESSIONAL SEAL 15825 ENGINEER BRYCE D. KLAPPENBACH
6-27-2013

REVISIONS						SHEET NO.
NO.	BY:	DATE:	NO.	BY:	DATE:	S-19
1			3			TOTAL SHEETS
2			4			266

DESIGN ENGINEER OF RECORD: S.T. CHAMPION DATE: 5-13-13
ASSEMBLED BY: D. A. GLADDEN DATE: 10-27-10
CHECKED BY: H. T. BARBOUR DATE: 1-5-12
DRAWN BY: REK 9/87
CHECKED BY: CRK 10/87
REV. 10/17/00 RWW/LES
REV. 5/7/03R RWW/LES
REV. 5/1/06 TLA/GM

14-MAY-2013 09:25
R:\Structures\Plans\Bailey\STRland2\dgladden\Microstation\R2707B_SD_STR1.dgn
dgladden

STR. #1 STD. NO. EJS1

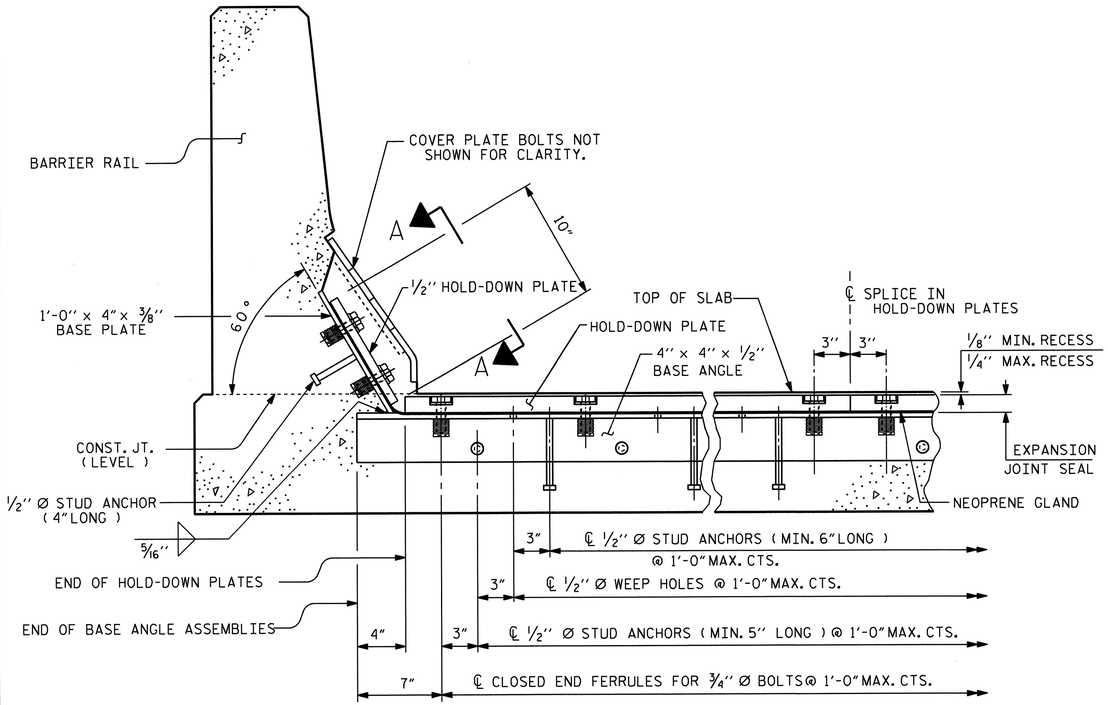

SECTION THRU RAIL NORMAL TO JOINT

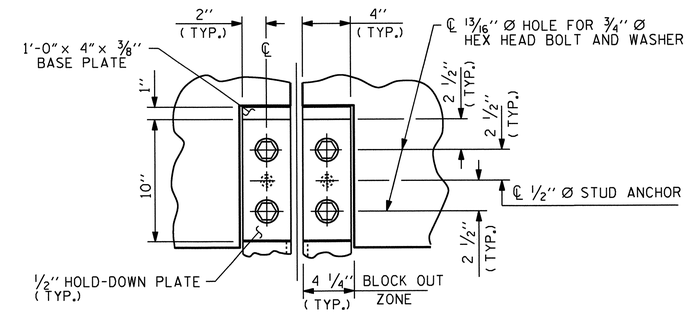

SECTION A - A

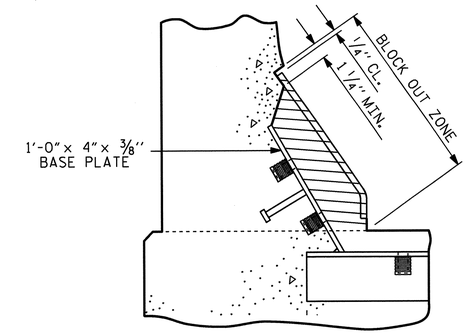

BLOCK OUT DETAIL

SEE "SECTION A - A" FOR OTHER DETAILS.

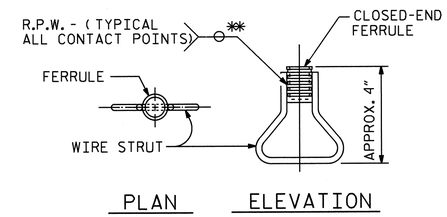

CONCRETE INSERT

** EACH WELDED ATTACHMENT OF WIRE TO FERRULE SHALL DEVELOP THE TENSILE STRENGTH OF THE WIRE.

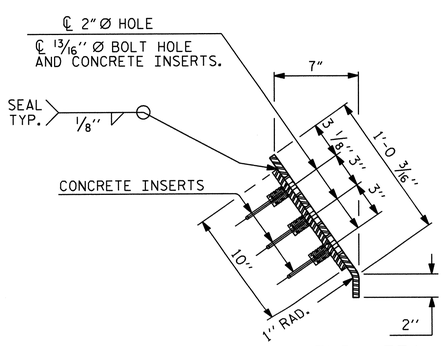

END VIEW

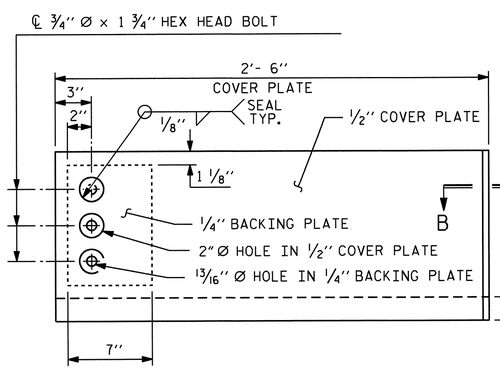

TYPE I - ELEVATION VIEW

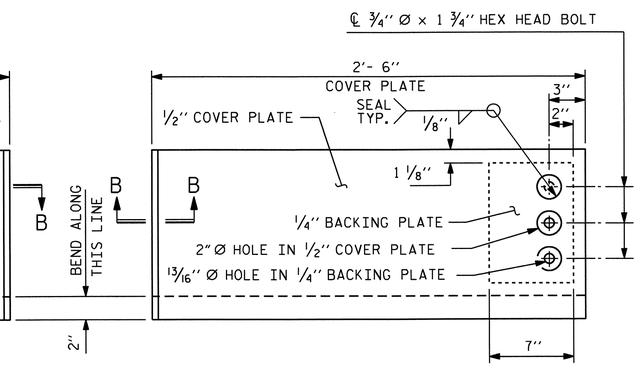

TYPE II - ELEVATION VIEW

COVER PLATE DETAILS

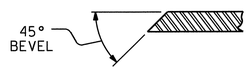

SECTION B - B

PROJECT NO. R-2707B
CLEVELAND COUNTY
STATION: 247+90.66 -L-

SHEET 2 OF 3

STATE OF NORTH CAROLINA
DEPARTMENT OF TRANSPORTATION
RALEIGH

EXPANSION JOINT SEAL DETAILS FOR BARRIER RAIL (LEFT LANE)

REVISIONS								SHEET NO.
NO.	BY:	DATE:	NO.	BY:	DATE:			S-20
1			3					TOTAL SHEETS
2			4					266

NORTH CAROLINA PROFESSIONAL SEAL 15825 ENGINEER BRIAN D. KLAPPENBACH
6-27-2013

DESIGN ENGINEER OF RECORD: -		DATE : -	
ASSEMBLED BY : D. A. GLADDEN		DATE : 10-27-10	
CHECKED BY : H. T. BARBOUR		DATE : 1-5-12	
DRAWN BY : REK 9/87	REV. 7/17/98	RWW/LES	
CHECKED BY : CRK 10/87	REV. 10/17/00	RWW/LES	
	REV. 5/1/06	TLA/GM	

14-MAY-2013 09:25
R:\Structures\Plans\Bailey\STRland2\dgladden\Microstation\R2707B_SD_STR1.dgn
dgladden

STR. #1

STD. NO. EJS2

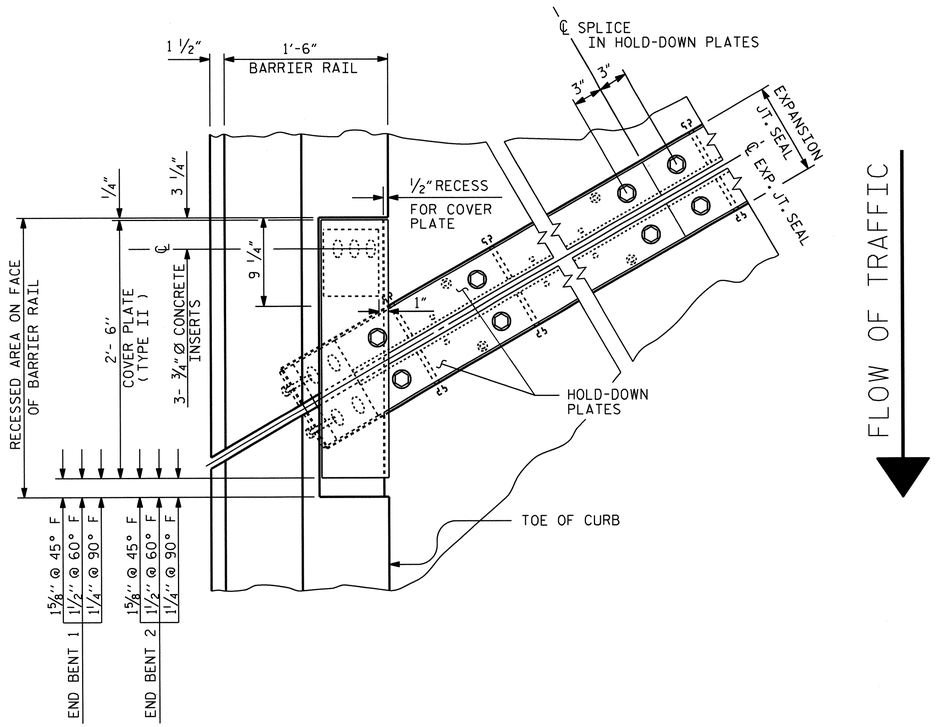

PLAN OF EXPANSION JOINT SEAL - LEFT SIDE

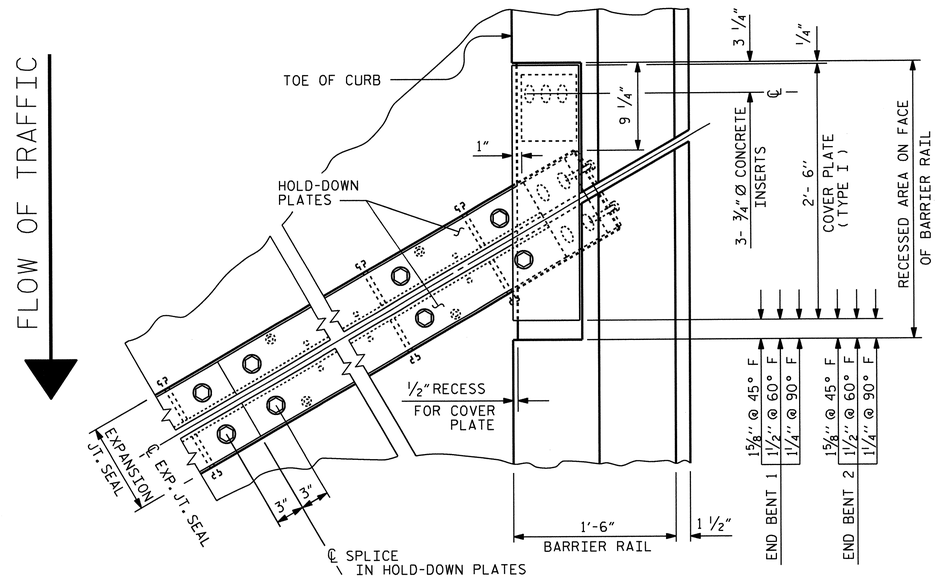

PLAN OF EXPANSION JOINT SEAL - RIGHT SIDE

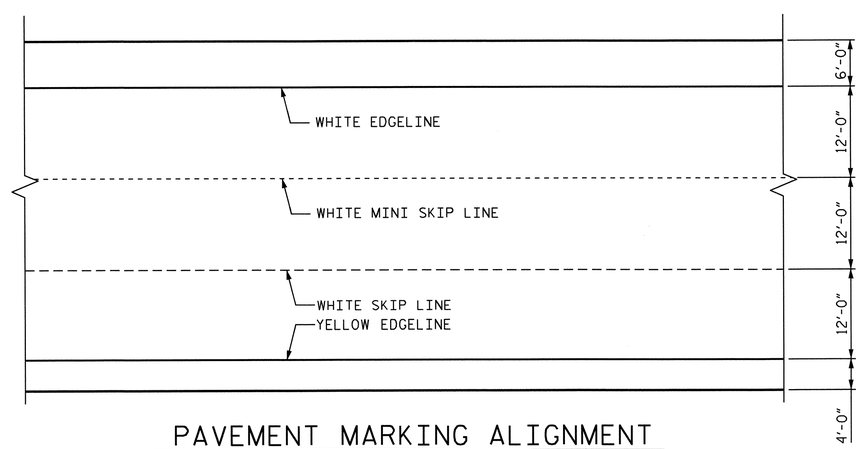

PAVEMENT MARKING ALIGNMENT

PROJECT NO. R-2707B
CLEVELAND COUNTY
STATION: 247+90.66 -L-

SHEET 3 OF 3

STATE OF NORTH CAROLINA
DEPARTMENT OF TRANSPORTATION
RALEIGH

EXPANSION JOINT SEAL DETAILS FOR BARRIER RAIL (LEFT LANE)

NORTH CAROLINA PROFESSIONAL SEAL 15825 ENGINEER BRUCE D. KLAPPENBACH
6-27-2013

REVISIONS						SHEET NO.
NO.	BY:	DATE:	NO.	BY:	DATE:	S-21
1			3			TOTAL SHEETS
2			4			266

STR. #1

DRAWN BY : D. A. GLADDEN DATE : 10-21-10
CHECKED BY : H. T. BARBOUR DATE : 1-5-12
DESIGN ENGINEER OF RECORD: - DATE : -

24-JUN-2013 09:59
R:\Structures\Plans\Bailey\STRIand2\dgladden\Microstation\R2707B_SD_STR1.dgn
dgladden

BILL OF MATERIAL

BAR	NO.	SIZE	TYPE	LENGTH	WEIGHT
✱ A1	248	#5	STR	48'-11"	12653
A2	248	#5	STR	48-11"	12653
✱ A101	6	#5	STR	47'- 1"	295
✱ A102	6	#5	STR	45- 1"	282
✱ A103	6	#5	STR	43'- 0"	269
✱ A104	6	#5	STR	40'-11"	256
✱ A105	6	#5	STR	38'-10"	243
✱ A106	6	#5	STR	36'-10"	231
✱ A107	6	#5	STR	34'- 9"	217
✱ A108	6	#5	STR	32'- 8"	204
✱ A109	6	#5	STR	30'- 8"	192
✱ A110	6	#5	STR	28'- 7"	179
✱ A111	6	#5	STR	26'-6"	166
✱ A112	6	#5	STR	24'- 5"	153
✱ A113	6	#5	STR	22'- 5"	140
✱ A114	6	#5	STR	20'- 4"	127
✱ A115	6	#5	STR	18'- 3"	114
✱ A116	6	#5	STR	16'- 3"	102
✱ A117	6	#5	STR	14'- 2"	89
✱ A118	6	#5	STR	12'- 1"	76
✱ A119	6	#5	STR	10'- 0"	63
✱ A120	6	#5	STR	8'- 0"	50
✱ A121	6	#5	STR	5'-11"	37
✱ A122	6	#5	STR	3'-10"	24
A201	6	#5	STR	47'- 1"	295
A202	6	#5	STR	45'- 1"	282
A203	6	#5	STR	43'- 0"	269
A204	6	#5	STR	40'-11"	256
A205	6	#5	STR	38'-10"	243
A206	6	#5	STR	36'-10"	231
A207	6	#5	STR	34'- 9"	217
A208	6	#5	STR	32'- 8"	204
A209	6	#5	STR	30'- 8"	192
A210	6	#5	STR	28'- 7"	179
A211	6	#5	STR	26'- 6"	166
A212	6	#5	STR	24'- 5"	153
A213	6	#5	STR	22'- 5"	140
A214	6	#5	STR	20'- 4"	127
A215	6	#5	STR	18'- 3"	114
A216	6	#5	STR	16'- 3"	102
A217	6	#5	STR	14'- 2"	89
A218	6	#5	STR	12'- 1"	76
A219	6	#5	STR	10'- 0"	63
A220	6	#5	STR	8'- 0"	50
A221	6	#5	STR	5'-11"	37
A222	6	#5	STR	3'-10"	24
✱ B1	94	#4	STR	23'- 6"	1476
✱ B2	94	#4	STR	26'- 8"	1674
✱ B3	47	#6	STR	54'- 2"	3824
✱ B4	44	#6	STR	22'- 1"	1459
✱ B5	156	#6	STR	50'- 7"	11852
✱ G1	2	#5	STR	58'- 9"	123
✱ J1	106	#4	8	1'- 5"	100
✱ K1	8	#8	1	15'- 7"	333
✱ K2	12	#8	2	23'- 9"	761
✱ K3	24	#6	STR	10'- 2"	366
K4	8	#4	STR	10'- 2"	54
K5	16	#4	STR	11'- 5"	122
K6	8	#4	STR	10'- 4"	55
K7	8	#4	STR	8'- 2"	44
K8	10	#4	6	7'- 5"	50
K9	15	#4	7	14'-10"	149
✱ S1	80	#4	3	4'-11"	263
✱ S2	80	#5	5	6'- 0"	501
S3	136	#4	4	2'- 9"	250
✱ U1	28	#4	2	13'- 0"	243
✱ U2	8	#4	2	11'- 0"	59

REINFORCING STEEL = 16886 LBS
✱ EPOXY COATED REINF. STEEL = 39196 LBS

BAR TYPES

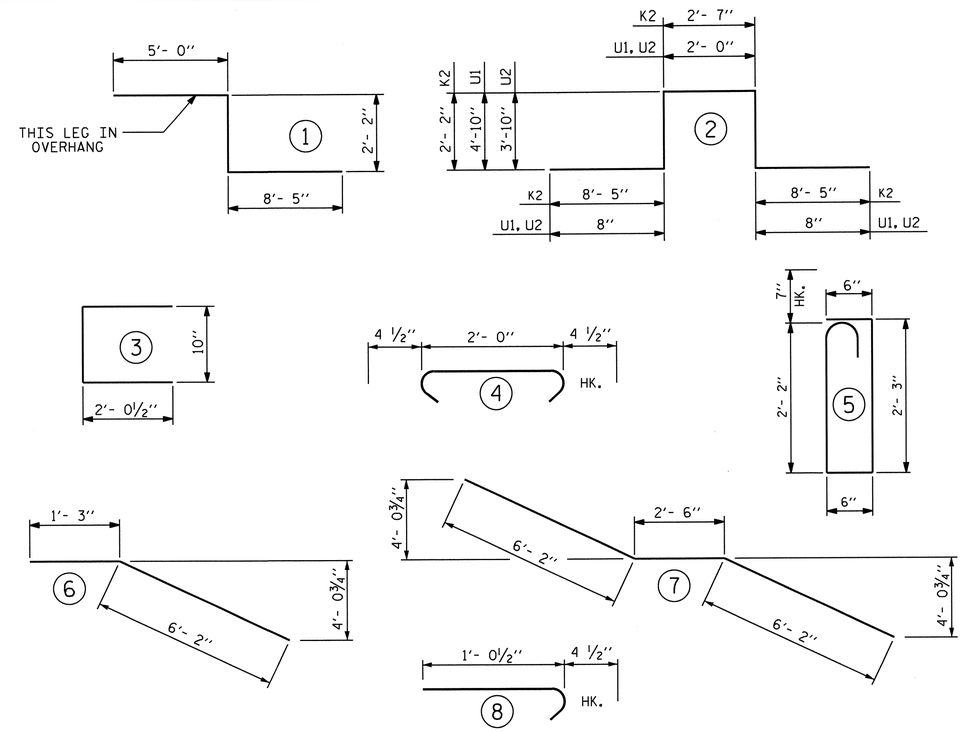

ALL BAR DIMENSIONS ARE OUT TO OUT

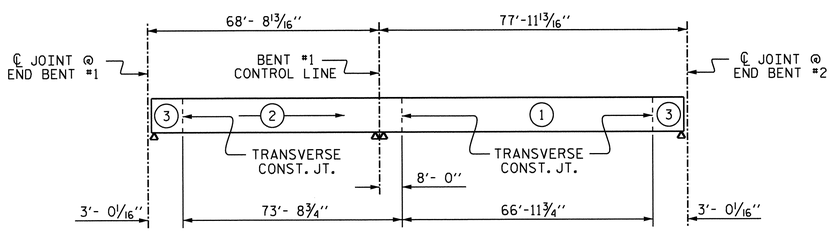

POURING SEQUENCE

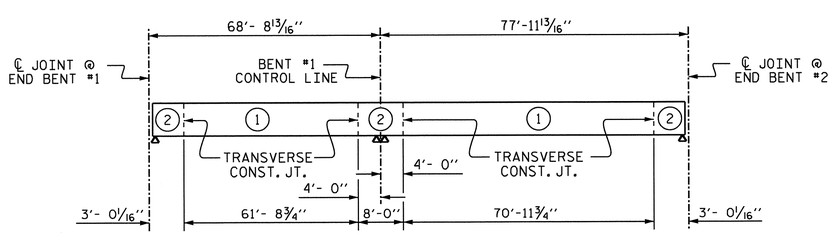

OPTIONAL POURING SEQUENCE

POUR #2 CANNOT BE STARTED UNTIL BOTH ADJACENT #1 POURS REACH A MINIMUM OF 3000 PSI.

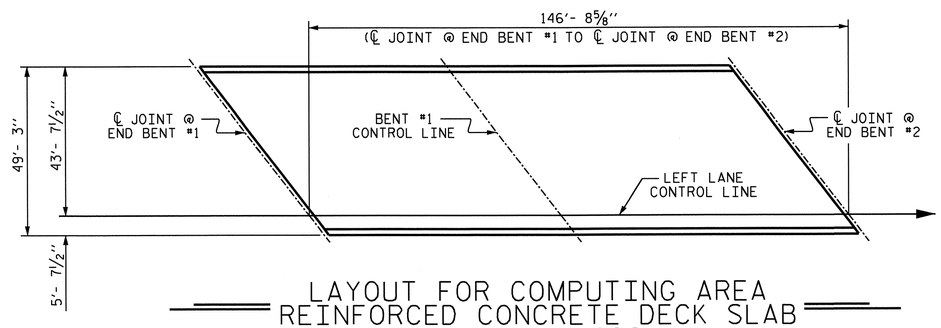

LAYOUT FOR COMPUTING AREA REINFORCED CONCRETE DECK SLAB
(SQ. FT. = 7,226)

SUPERSTRUCTURE BILL OF MATERIAL

	CLASS AA CONCRETE	REINFORCING STEEL	✱ EPOXY COATED REINFORCING STEEL
	(CU. YDS.)	(LBS.)	(LBS.)
POUR 1	111.4	16886	39196
POUR 2	142.1		
POUR 3	19.7		
TOTALS ✱✱	273.2	16886	39196

✱✱ QUANTITIES FOR CONCRETE BARRIER RAIL ARE NOT INCLUDED

SUPERSTRUCTURE REINFORCING STEEL LENGTHS ARE BASED ON THE FOLLOWING MINIMUM SPLICE LENGTHS

BAR SIZE	SUPERSTRUCTURE EXCEPT APPROACH SLABS, PARAPET, AND BARRIER RAIL		APPROACH SLABS		PARAPET AND BARRIER RAIL
	EPOXY COATED	UNCOATED	EPOXY COATED	UNCOATED	
#4	2'-0"	1'-9"	2'-0"	1'-9"	2'-9"
#5	2'-6"	2'-2"	2'-6"	2'-2"	3'-5"
#6	3'-0"	2'-7"	3'-10"	2'-7"	4'-4"
#7	5'-3"	3'-6"			
#8	6'-10"	4'-7"			

GROOVING BRIDGE FLOORS

APPROACH SLABS	2029	SQ.FT.
BRIDGE DECK	6252	SQ.FT.
TOTAL	8281	SQ.FT.

NORTH CAROLINA PROFESSIONAL SEAL 15825 ENGINEER BRUCE D. KLAPPERICH
6-27-2013

PROJECT NO. R-2707B
CLEVELAND COUNTY
STATION: 247+90.66 -L-

STATE OF NORTH CAROLINA
DEPARTMENT OF TRANSPORTATION
RALEIGH

SUPERSTRUCTURE BILL OF MATERIAL (LEFT LANE)

REVISIONS								SHEET NO.
NO.	BY:	DATE:	NO.	BY:	DATE:			S-22
1			3					TOTAL SHEETS
2			4					266

DRAWN BY : D. A. CLADDEN DATE : 10-21-10
CHECKED BY : H. T. BARBOUR DATE : 1-5-12
DESIGN ENGINEER OF RECORD: S.T. CHAMPION DATE : 5-13-13

24-JUN-2013 13:11
R:\Structures\Plans\Bailey\STRland2\dgladden\Microstation\R2707B_SD_STR1.dgn
dgladden

STR. #1 STD. NO. BOM2

NOTES

STIRRUPS IN CAP MAY BE SHIFTED AS NECESSARY TO CLEAR ANCHOR BOLTS.

BACKWALL SHALL BE PLACED BEFORE APPLYING THE EPOXY PROTECTIVE COATING.

THE TOP SURFACE OF THE END BENT CAP EXCEPT THE BRIDGE SEAT BUILDUPS SHALL BE SLOPED TRANSVERSELY FROM THE FILL FACE TO THE BACK FACE AT THE RATE OF 2%.

THE CONCRETE IN THE SHADED AREA OF THE WING SHALL BE POURED AFTER THE BARRIER RAIL IS CAST IF SLIP FORMING IS USED.

INSTALL THE 4"DIA. DRAIN PIPE THROUGH THE WING WALL AS REQUIRED FOR REINFORCED BRIDGE APPROACH FILLS. SEE THE ROADWAY PLANS. REINFORCING STEEL IN THE WING WALL MAY BE SHIFTED AS NECESSARY TO CLEAR THE DRAIN PIPE.

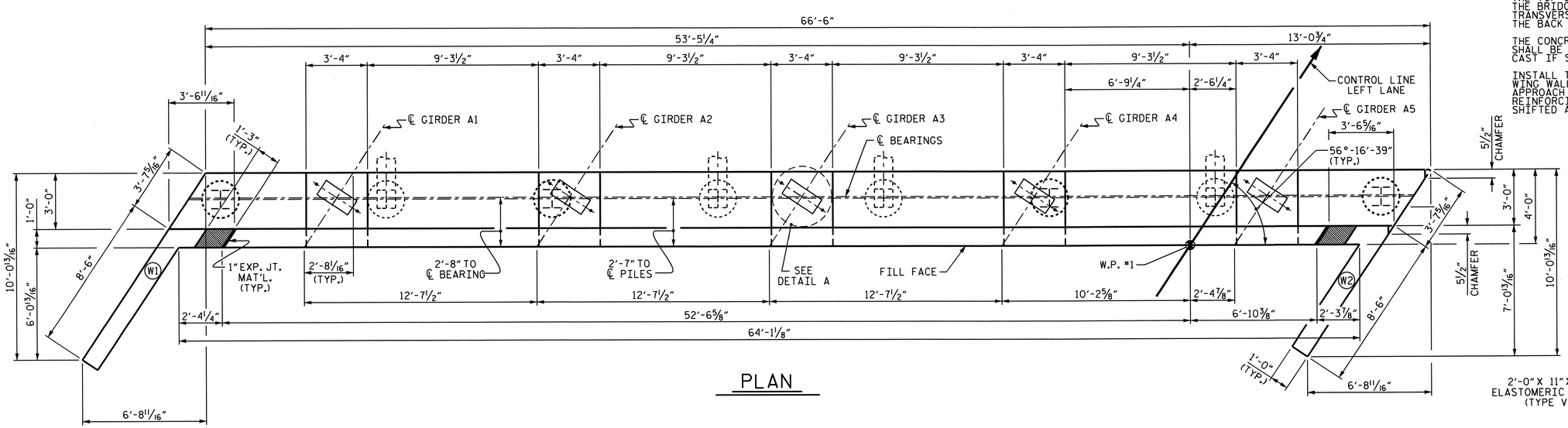

PLAN

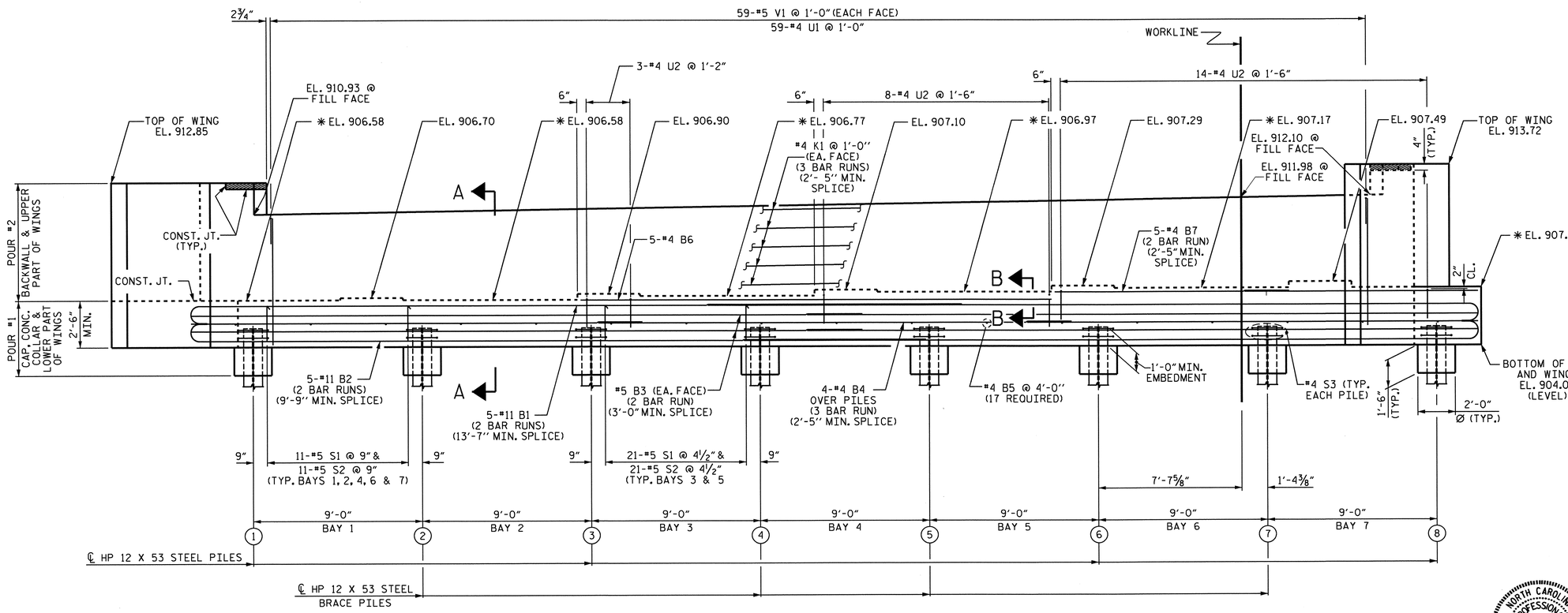

ELEVATION

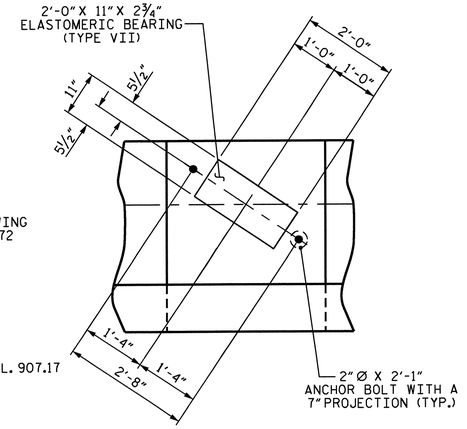

DETAIL A

(TYP. EACH GIRDER)

PROJECT NO. R-2707B

CLEVELAND COUNTY

STATION: 247+90.66-L-

SHEET 1 OF 3

STATE OF NORTH CAROLINA
DEPARTMENT OF TRANSPORTATION
RALEIGH

SUBSTRUCTURE
END BENT #1
(LEFT LANE)

NORTH CAROLINA PROFESSIONAL SEAL 15825 ENGINEER BRIAN D. KLAPPENBACH 6-27-2013

REVISIONS						SHEET NO.
NO.	BY:	DATE:	NO.	BY:	DATE:	S-23
1			3			TOTAL SHEETS
2			4			266

DRAWN BY : H. T. BARBOUR DATE : 5-16-12
CHECKED BY : D. A. GLADDEN DATE : 7-12

DESIGN ENGINEER OF RECORD: S. T. CHAMPION DATE : 5-13

24-JUN-2013 08:12
K:\Structures\Plans\Bailey\STRland2\tbarbour\Microstation\str-1\R-2707B_SD_E*.dgn
tbarbour

STR. #1 NC0DS

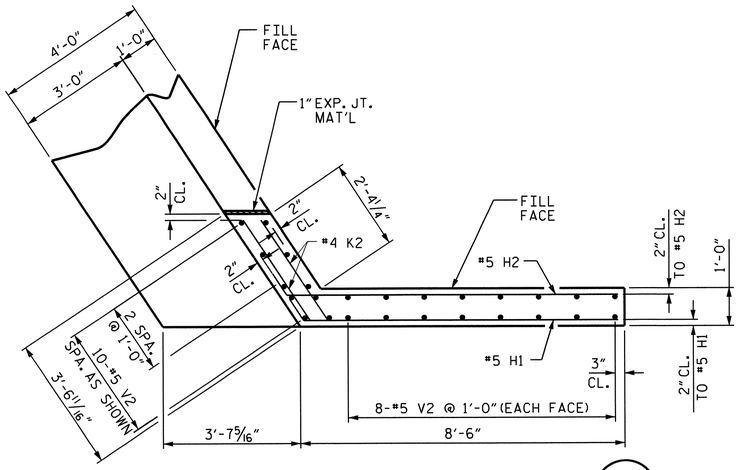

PLAN OF LEFT WING (W1)

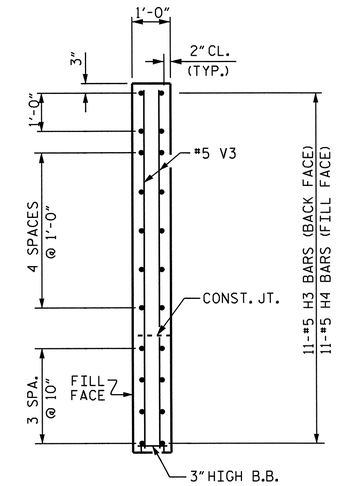

SECTION X-X

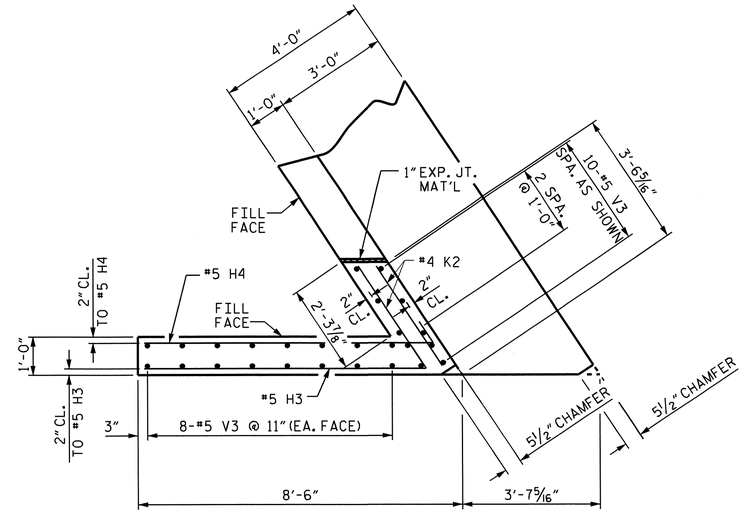

PLAN OF RIGHT WING (W2)

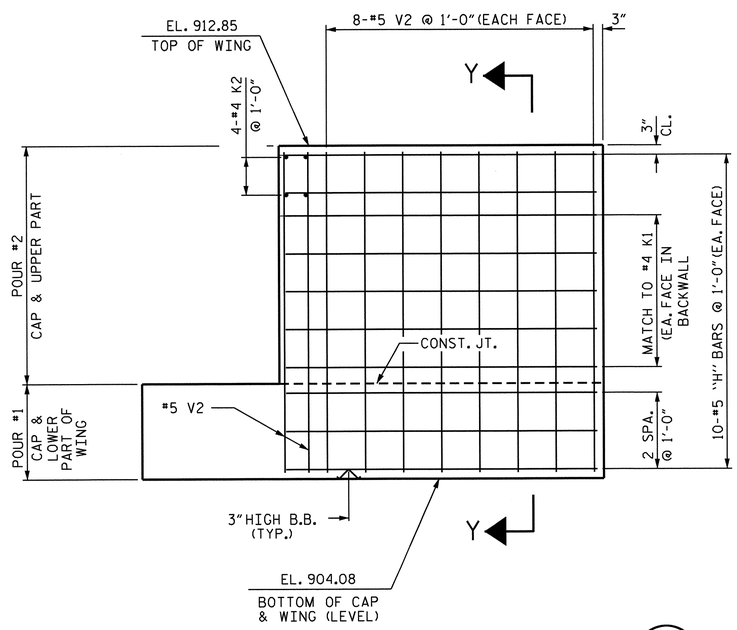

ELEVATION OF LEFT WING (W1)

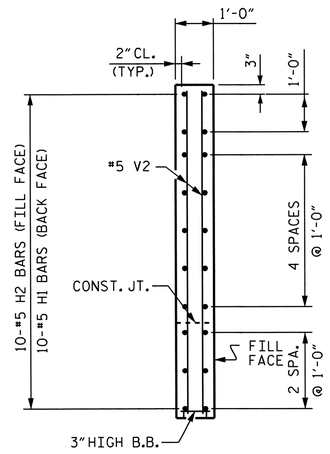

SECTION Y-Y

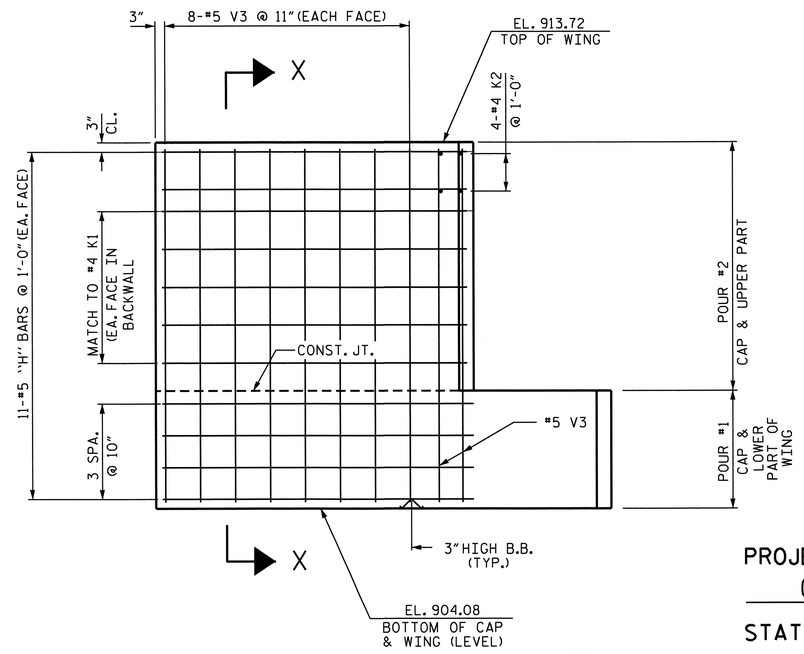

ELEVATION OF RIGHT WING (W2)

PROJECT NO. R-2707B

CLEVELAND COUNTY

STATION: 247+90.66-L-

SHEET 2 OF 3

STATE OF NORTH CAROLINA
DEPARTMENT OF TRANSPORTATION
RALEIGH

SUBSTRUCTURE END BENT #1 (LEFT LANE)

NORTH CAROLINA PROFESSIONAL SEAL 15825 ENGINEER BRUCE D. KLAPPENBACH
6-27-2013

REVISIONS						SHEET NO.
NO.	BY:	DATE:	NO.	BY:	DATE:	S-24
1			3			TOTAL SHEETS
2			4			266

DRAWN BY : H. T. BARBOUR DATE : 5-16-12
CHECKED BY : D. A. GLADDEN DATE : 7-12

DESIGN ENGINEER OF RECORD: S. T. CHAMPION DATE : 5-13

13-MAY-2013 16:21
K:\Structures\Plans\Bailey\STRland2\tbarbour\Microstation\str-1\R-2707B_SD_E*.dgn
tbarbour

STR. #1

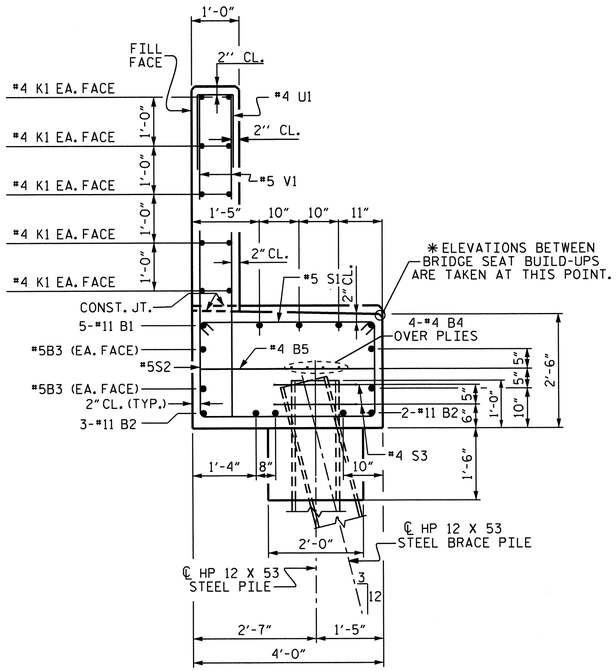

SECTION A-A

(SEE SHEET 1 OF 3)

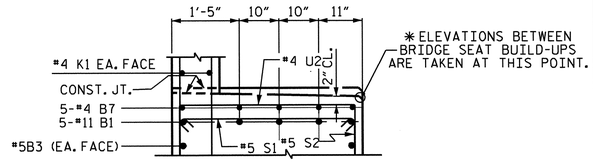

SECTION B-B

(SEE SHEET 1 OF 3)

BAR TYPES

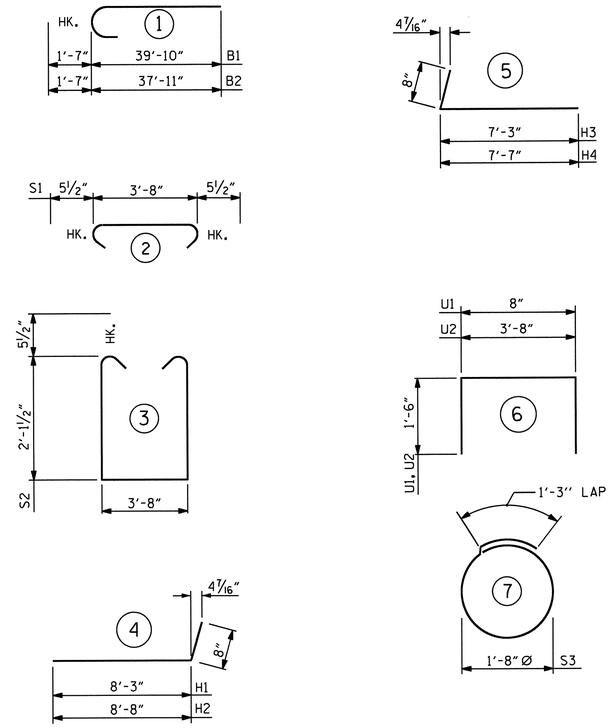

ALL BAR DIMENSIONS ARE OUT TO OUT.

BILL OF MATERIAL

END BENT #1

BAR	NO.	SIZE	TYPE	LENGTH	WEIGHT
B1	10	11	1	41'-5"	2200
B2	10	11	1	39'-6"	2099
B3	8	5	STR	34'-7"	289
B4	12	4	STR	23'-8"	190
B5	17	4	STR	3'-8"	42
B6	5	4	STR	25'-3"	84
B7	10	4	STR	12'-4"	82
H1	10	5	4	8'-11"	93
H2	10	5	4	9'-4"	97
H3	11	5	5	7'-11"	91
H4	11	5	5	8'-3"	95
K1	30	4	STR	23'-8"	474
K2	8	4	STR	3'-1"	16
S1	97	5	2	4'-7"	464
S2	97	5	3	8'-10"	894
S3	16	4	7	6'-6"	69
U1	59	4	6	3'-8"	145
U2	25	4	6	6'-8"	111
V1	118	5	STR	6'-9"	831
V2	26	5	STR	8'-5"	228
V3	26	5	STR	9'-3"	251
REINFORCING STEEL				LBS	8855

CLASS A CONCRETE BREAKDOWN

POUR #1

CAP, LOWER PART OF WINGS & CONCRETE COLLARS — 31.0 CU. YDS.

POUR #2

BACKWALL & UPPER PART OF WINGS — 15.7 CU. YDS.

CLASS A CONCRETE TOTAL — 46.7 CU. YDS.

HP 12 x 53 STEEL PILES

NO. 8 LIN. FT. 400

PILE REDRIVES 8 EACH

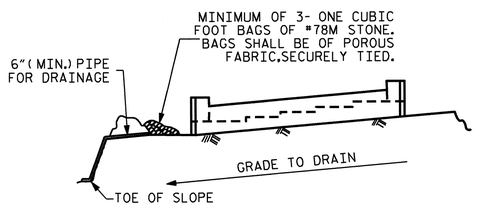

BAGGED STONE AND PIPE SHALL BE PLACED IMMEDIATELY AFTER COMPLETION OF END BENT EXCAVATION. PIPE MAY BE EITHER CONCRETE, CORRUGATED STEEL, CORRUGATED ALUMINUM ALLOY, OR CORRUGATED PLASTIC. PERFORATED PIPE WILL NOT BE ALLOWED.

BAGGED STONE SHALL REMAIN IN PLACE UNTIL THE ENGINEER DIRECTS THAT IT BE REMOVED. THE CONTRACTOR SHALL REMOVE AND DISPOSE OF SILT ACCUMULATIONS AT BAGGED STONE WHEN SO DIRECTED BY THE ENGINEER. BAGS SHALL BE REMOVED AND REPLACED WHENEVER THE ENGINEER DETERMINES THAT THEY HAVE DETERIORATED AND LOST THEIR EFFECTIVENESS.

NO SEPARATE PAYMENT WILL BE MADE FOR THIS WORK AND THE ENTIRE COST OF THIS WORK SHALL BE INCLUDED IN THE UNIT CONTRACT PRICE BID FOR THE SEVERAL PAY ITEMS.

TEMPORARY DRAINAGE AT END BENT

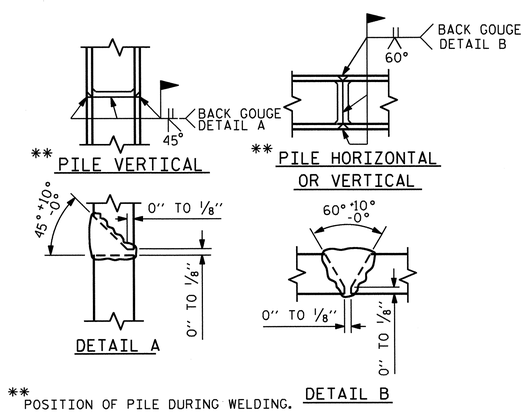

** POSITION OF PILE DURING WELDING.

PILE SPLICE DETAILS

PROJECT NO. R-2707B

CLEVELAND COUNTY

STATION: 247+90.66-L-

SHEET 3 OF 3

STATE OF NORTH CAROLINA
DEPARTMENT OF TRANSPORTATION
RALEIGH

SUBSTRUCTURE
END BENT #1
(LEFT LANE)

NORTH CAROLINA PROFESSIONAL SEAL 15825 ENGINEER BRUCE D. KLAPPENBACH 6-27-2012

REVISIONS						SHEET NO.
NO.	BY:	DATE:	NO.	BY:	DATE:	S-25
1			3			TOTAL SHEETS
2			4			266

DRAWN BY : H. T. BARBOUR DATE : 4-25-12
CHECKED BY : D. A. GLADDEN DATE : 7-12

DESIGN ENGINEER OF RECORD: S. T. CHAMPION DATE : 5-13

STR. #1

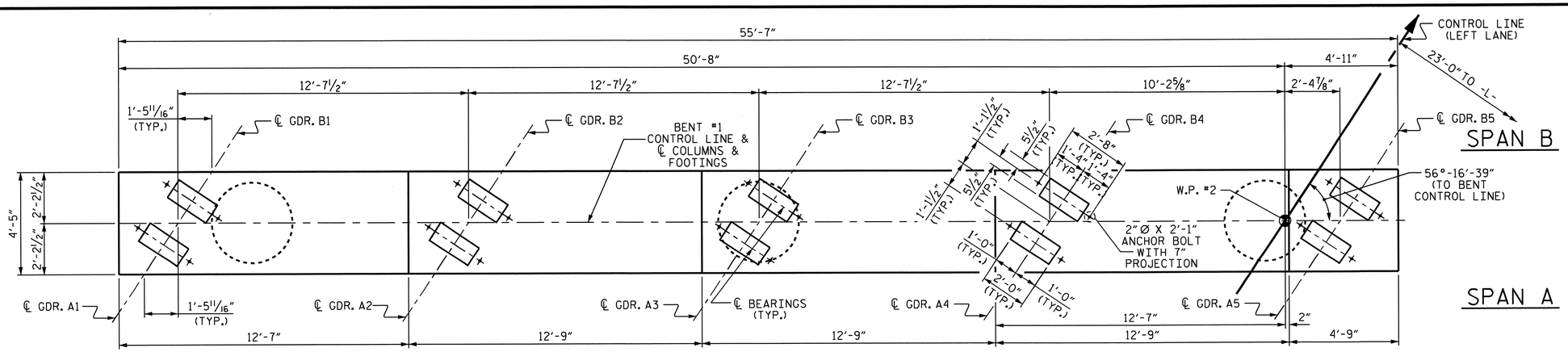

PLAN

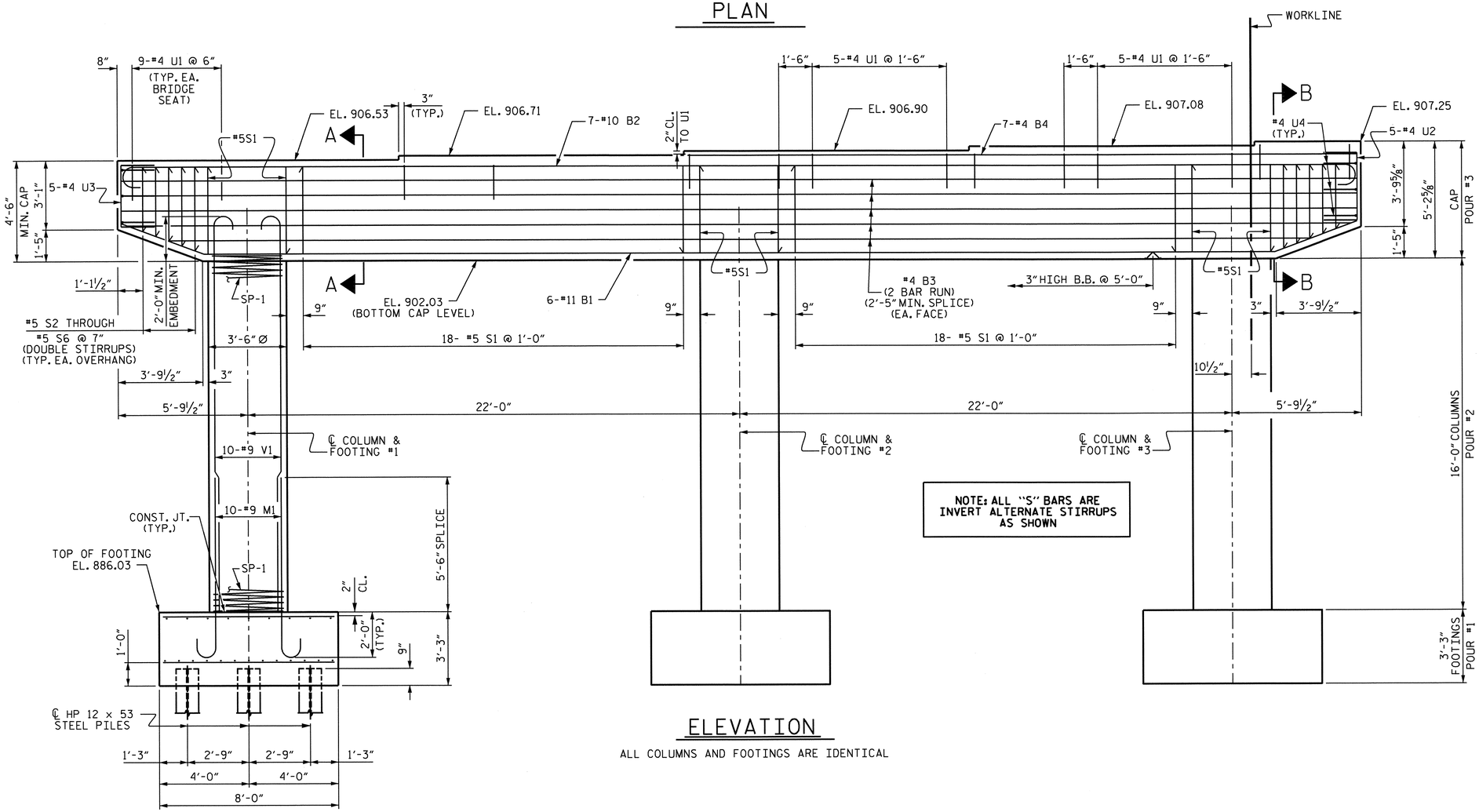

NOTE: ALL "S" BARS ARE INVERT ALTERNATE STIRRUPS AS SHOWN

ELEVATION

ALL COLUMNS AND FOOTINGS ARE IDENTICAL

NOTES

STIRRUPS IN CAP MAY BE SHIFTED AS NECESSARY TO CLEAR ANCHOR BOLTS.

HOOKS ON "V" BARS MAY BE TURNED AS NECESSARY FOR PLACING REINFORCING STEEL.

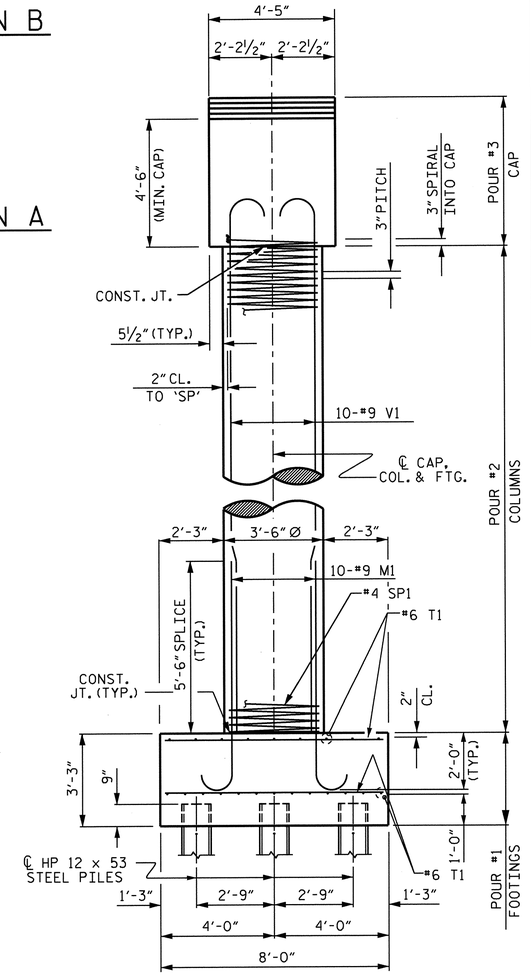

LEFT END ELEVATION

PROJECT NO. R-2707B

CLEVELAND COUNTY

STATION: 247+90.66-L-

SHEET 1 OF 2

STATE OF NORTH CAROLINA
DEPARTMENT OF TRANSPORTATION
RALEIGH

SUBSTRUCTURE
BENT #1
(LEFT LANE)

NORTH CAROLINA PROFESSIONAL SEAL 5825 ENGINEER D. KLAPPENBACH
6-27-2013

REVISIONS						SHEET NO.
NO.	BY:	DATE:	NO.	BY:	DATE:	S-26
1			3			TOTAL SHEETS
2			4			266

STR. #1

DRAWN BY : H. T. BARBOUR DATE : 10-14-11
CHECKED BY : D. A. GLADDEN DATE : 5-12

DESIGN ENGINEER OF RECORD: S. T. CHAMPION DATE : 5-13

24-JUN-2013 08:22
K:\Structures\Plans\Bailey\STRland2\tbarbour\Microstation\str-1\R2707B_SD_B*.dgn
tbarbour

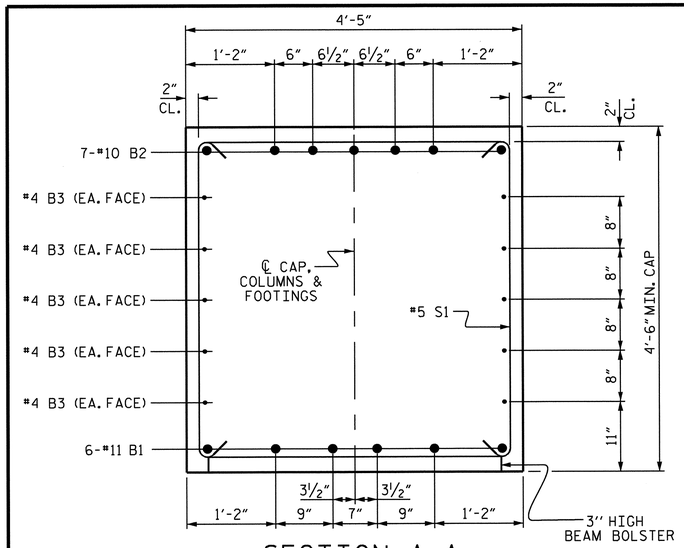

SECTION A-A

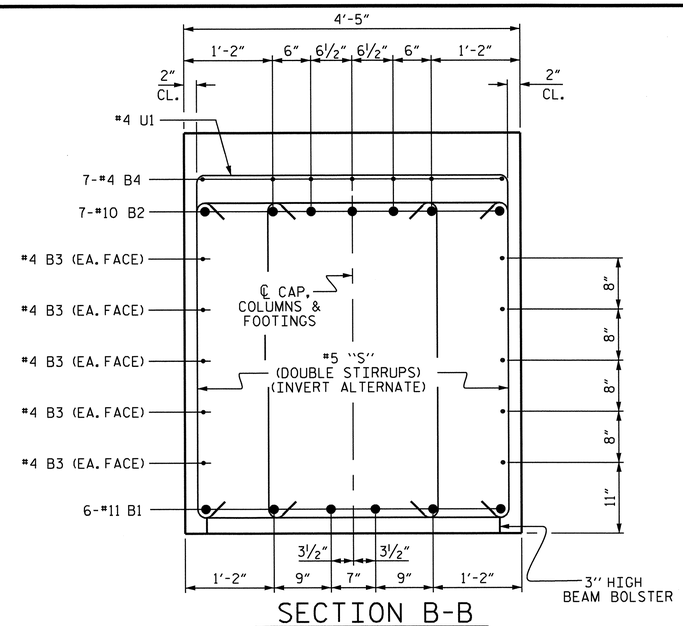

SECTION B-B

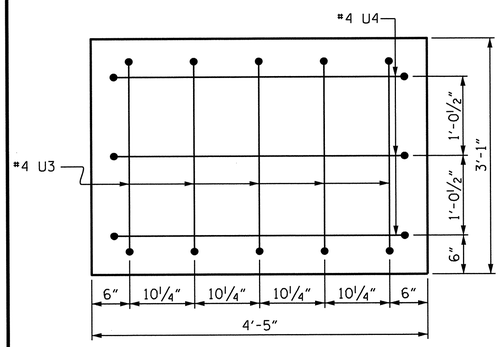

LEFT END OF CAP DETAIL

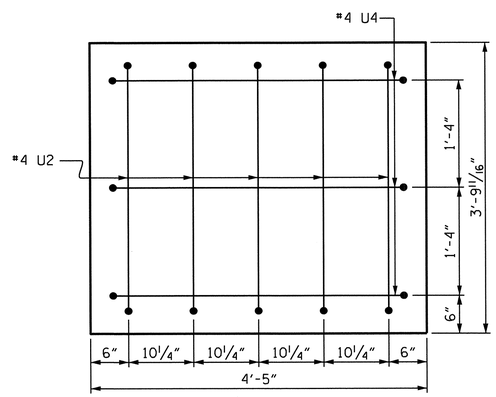

RIGHT END OF CAP DETAIL

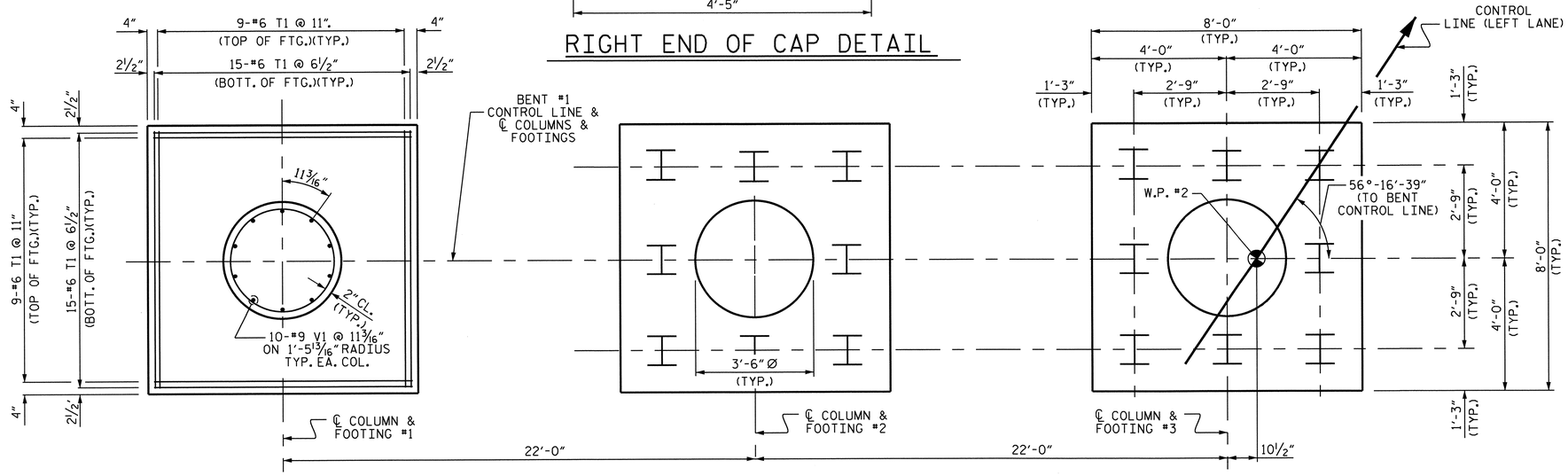

PLAN OF COLUMNS AND FOOTINGS

FOOTING DETAILS ARE TYPICAL

BAR TYPES

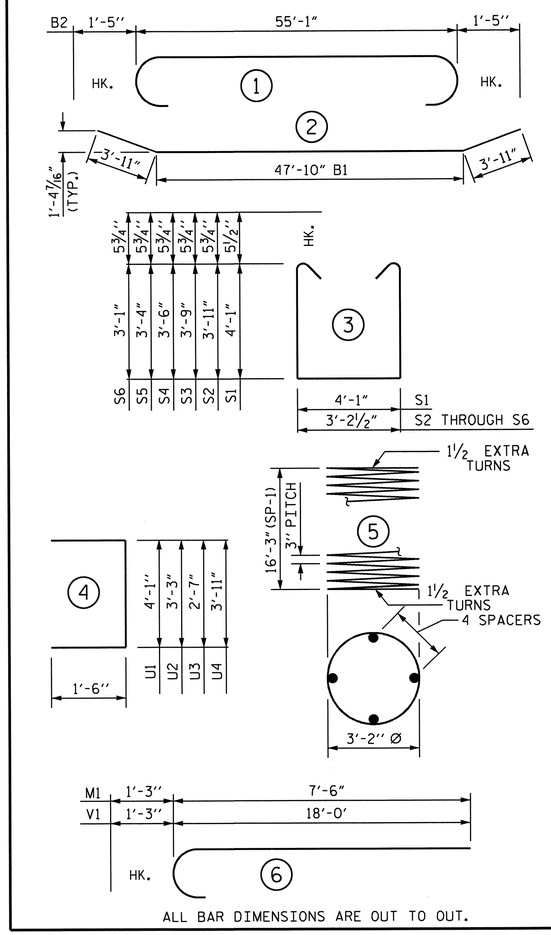

ALL BAR DIMENSIONS ARE OUT TO OUT.

BILL OF MATERIAL

BAR	NO.	SIZE	TYPE	LENGTH	WEIGHT
B1	6	#11	2	55'-8"	1775
B2	7	#10	1	57'-11"	1745
B3	20	#4	STR	28'-10"	385
B4	7	#4	STR	29'-11"	140
M1	30	#9	6	8'-9"	893
S1	42	#5	3	13'-2"	577
S2	4	#5	3	12'-0"	50
S3	4	#5	3	11'-8"	49
S4	4	#5	3	11'-2"	47
S5	4	#5	3	10'-10"	45
S6	4	#5	3	10'-4"	43
T1	144	#6	STR	7'-8"	1658
U1	55	#4	4	7'-1"	260
U2	5	#4	4	6'-3"	21
U3	5	#4	4	5'-7"	19
U4	6	#4	4	6'-11"	28
V1	30	#9	6	19'-3"	1964
REINFORCING STEEL				=	9699 LBS.
SP-1	3	*	5	668'-0"	1339

SPIRAL COLUMN REINFORCING STEEL = 1339 LBS.

CLASS A CONCRETE BREAKDOWN

POUR #1 (FOOTINGS)	=	23.1 C.Y.
POUR #2 (COLUMN)	=	17.1 C.Y.
POUR #3 (CAP)	=	42.9 C.Y.
TOTAL	=	83.1 C.Y.

HP 12 x 53 STEEL PILES NO. 24 = LIN. FT. 1080

PILE REDRIVES 24 EACH

* THE SP-1 SPIRAL REINFORCING STEEL SHALL BE W20 OR D-20 COLD DRAWN WIRE OR #4 PLAIN OR DEFORMED BAR.

PROJECT NO. R-2707B

CLEVELAND COUNTY

STATION: 247+90.66-L-

SHEET 2 OF 2

STATE OF NORTH CAROLINA
DEPARTMENT OF TRANSPORTATION
RALEIGH

SUBSTRUCTURE BENT #1 (LEFT LANE)

NORTH CAROLINA PROFESSIONAL SEAL 15825 ENGINEER BRUCE D. KLAPPENBACH 6-27-2013

REVISIONS						SHEET NO.
NO.	BY:	DATE:	NO.	BY:	DATE:	S-27
1			3			TOTAL SHEETS
2			4			266

DRAWN BY : H. T. BARBOUR DATE : 10-17-11
CHECKED BY : D. A. GLADDEN DATE : 5-12

DESIGN ENGINEER OF RECORD: S. T. CHAMPION DATE : 5-13

24-JUN-2013 08:23
K:\Structures\Plans\Bailey\STRland2\tbarbour\Microstation\str-1\R2707B_SD_B*.dgn
tbarbour

STR #1

NOTES

STIRRUPS IN CAP MAY BE SHIFTED AS NECESSARY TO CLEAR ANCHOR BOLTS.

BACKWALL SHALL BE PLACED BEFORE APPLYING THE EPOXY PROTECTIVE COATING.

THE TOP SURFACE OF THE END BENT CAP EXCEPT THE BRIDGE SEAT BUILDUPS SHALL BE SLOPED TRANSVERSELY FROM THE FILL FACE TO THE BACK FACE AT THE RATE OF 2%.

THE CONCRETE IN THE SHADED AREA OF THE WING SHALL BE POURED AFTER THE BARRIER RAIL IS CAST IF SLIP FORMING IS USED.

INSTALL THE 4"DIA. DRAIN PIPE THROUGH THE WING WALL AS REQUIRED FOR REINFORCED BRIDGE APPROACH FILLS. SEE THE ROADWAY PLANS. REINFORCING STEEL IN THE WING WALL MAY BE SHIFTED AS NECESSARY TO CLEAR THE DRAIN PIPE.

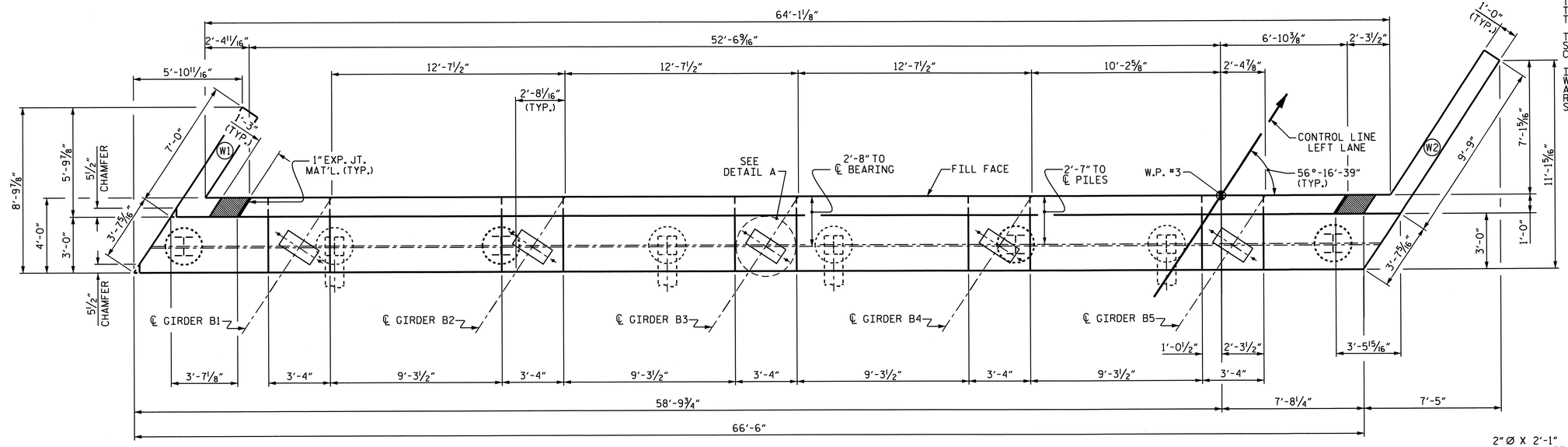

PLAN

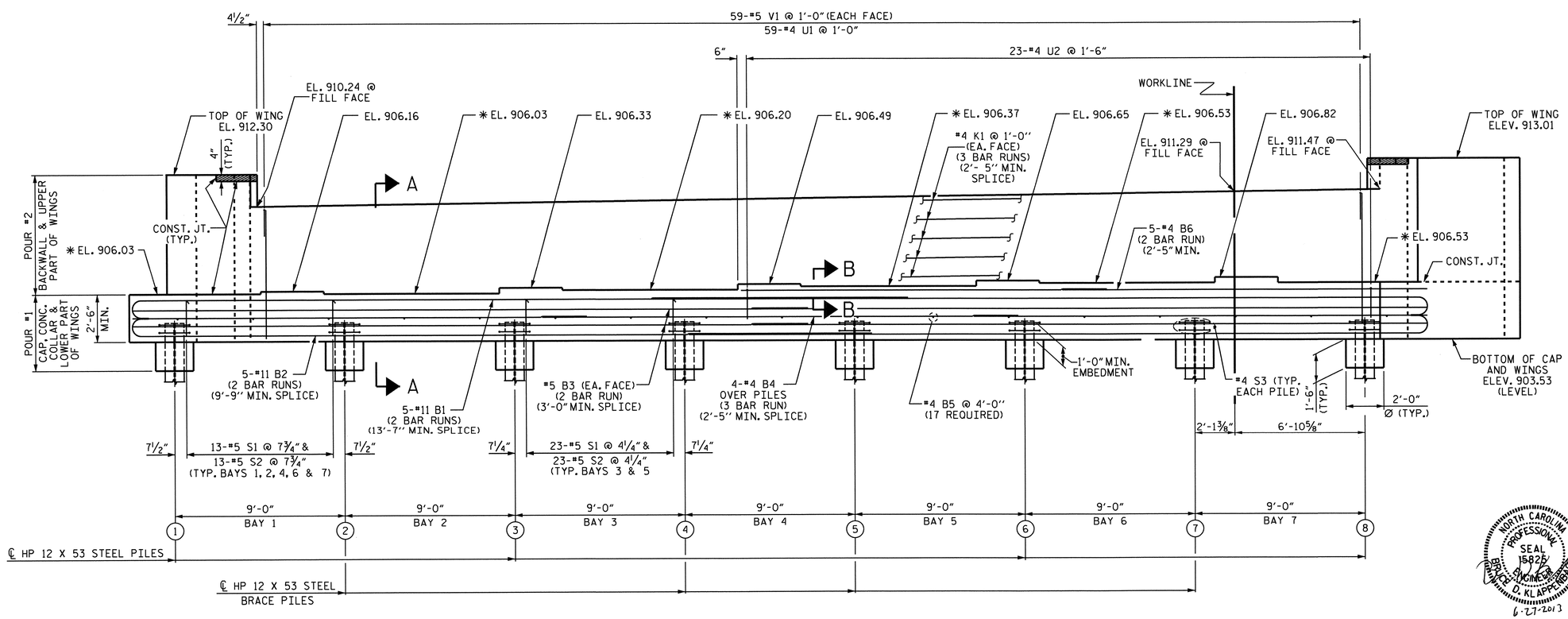

ELEVATION

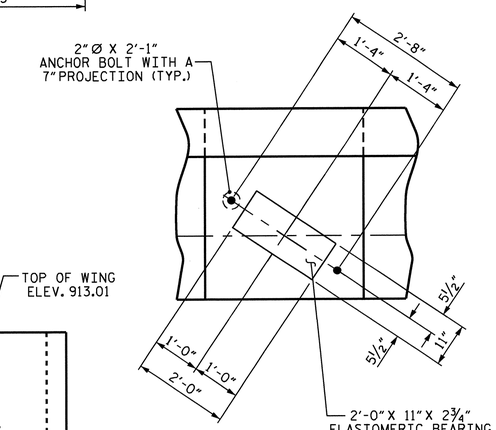

DETAIL A

(TYP. EACH GIRDER)

PROJECT NO. R-2707B

CLEVELAND COUNTY

STATION: 247+90.66-L-

SHEET 1 OF 3

STATE OF NORTH CAROLINA
DEPARTMENT OF TRANSPORTATION
RALEIGH

SUBSTRUCTURE
END BENT #2
LEFT CAUE

NORTH CAROLINA PROFESSIONAL SEAL 15825 ENGINEER BRYAN D. KLAPPENBACH
6-27-2013

REVISIONS						SHEET NO.
NO.	BY:	DATE:	NO.	BY:	DATE:	S-28
1			3			TOTAL SHEETS
2			4			266

DRAWN BY : H. T. BARBOUR DATE : 5-17-12
CHECKED BY : D. A. GLADDEN DATE : 7-12

DESIGN ENGINEER OF RECORD: S. T. CHAMPION DATE : 5-13

24-JUN-2013 08:12
K:\Structures\Plans\Bailey\STRland2\tbarbour\Microstation\str-1\R-2707B_SD_E*.dgn
tbarbour

STR. #1 NCDDS

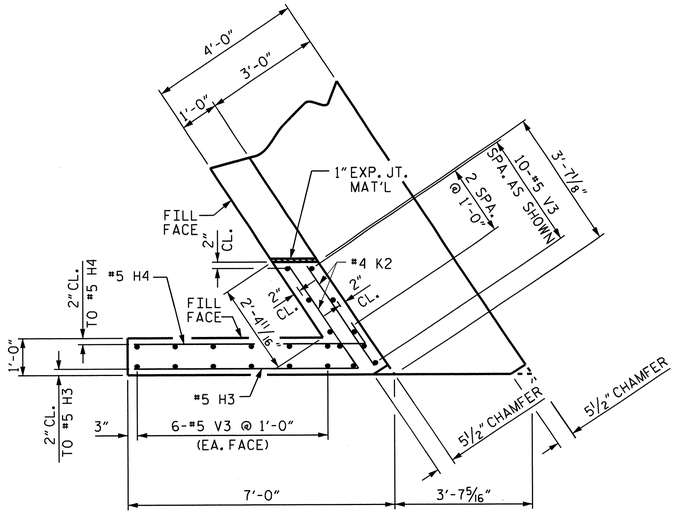

PLAN OF LEFT WING (W1)

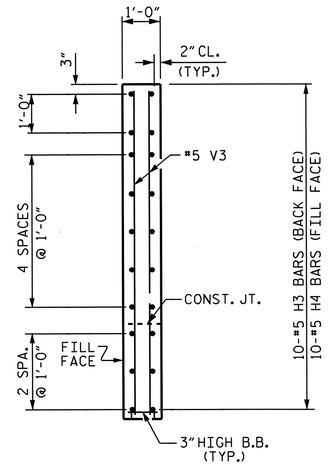

SECTION X-X

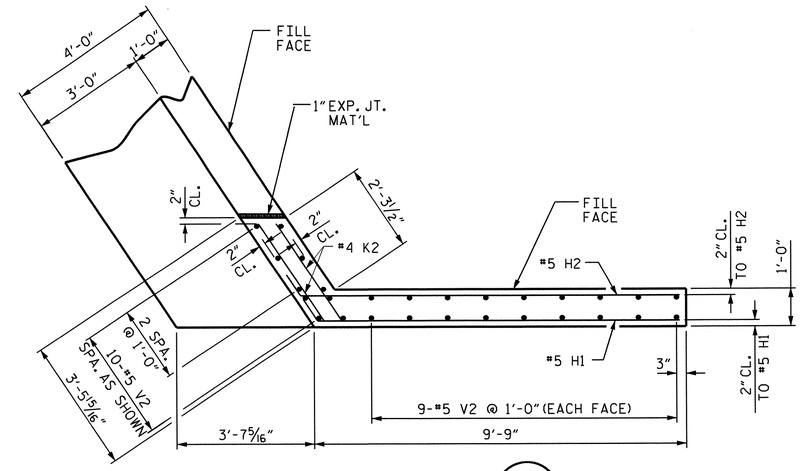

PLAN OF RIGHT WING (W2)

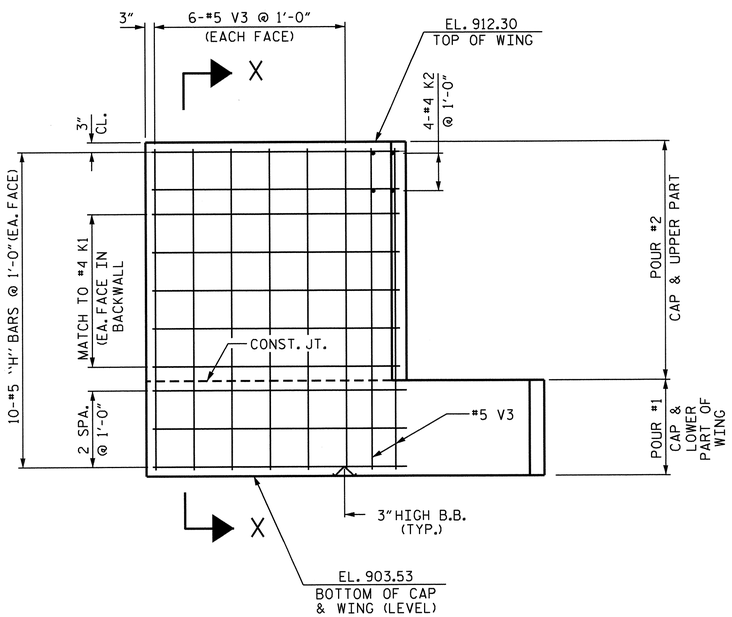

ELEVATION OF LEFT WING (W1)

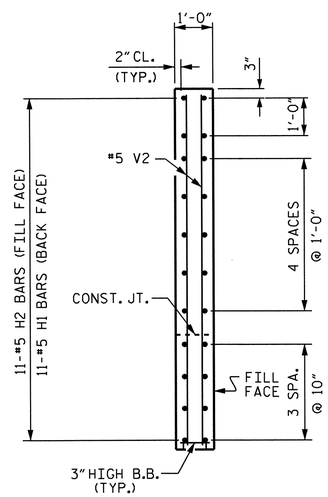

SECTION Y-Y

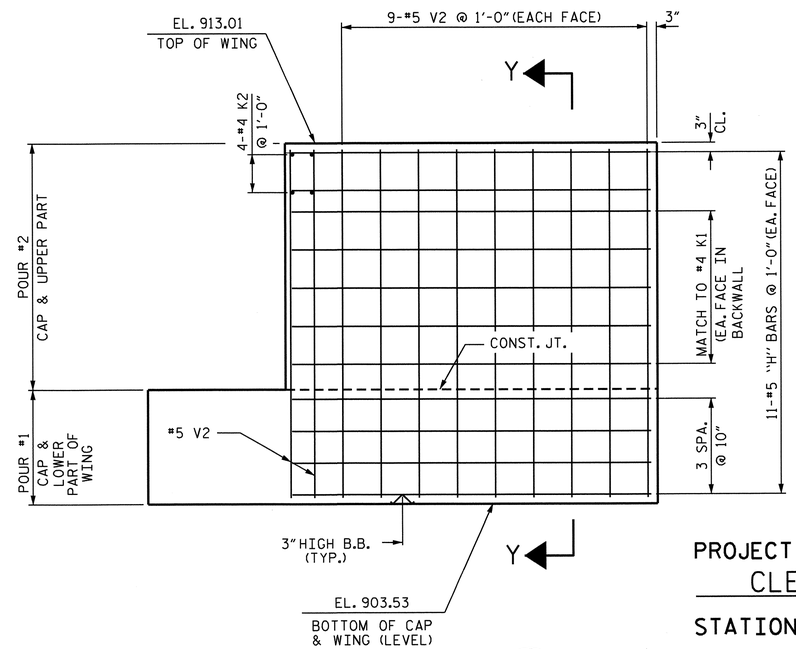

ELEVATION OF LEFT WING (W1)

PROJECT NO. R-2707B
CLEVELAND COUNTY
STATION: 247+90.66-L-

SHEET 2 OF 3

STATE OF NORTH CAROLINA
DEPARTMENT OF TRANSPORTATION
RALEIGH

SUBSTRUCTURE
END BENT #2
(LEFT LANE)

NORTH CAROLINA PROFESSIONAL SEAL 15825 ENGINEER BRUCE D. KLAPPENBACH
5-27-2013

REVISIONS						SHEET NO.
NO.	BY:	DATE:	NO.	BY:	DATE:	S-29
1			3			TOTAL SHEETS
2			4			266

DRAWN BY : H. T. BARBOUR DATE : 5-16-12	DESIGN ENGINEER OF RECORD:
CHECKED BY : D. A. GLADDEN DATE : 7-12	S. T. CHAMPION DATE : 5-13

13-MAY-2013 16:22
K:\Structures\Plans\Bailey\STRland2\tbarbour\Microstation\str-1\R-2707B_SD_E*.dgn
tbarbour

STR. #1

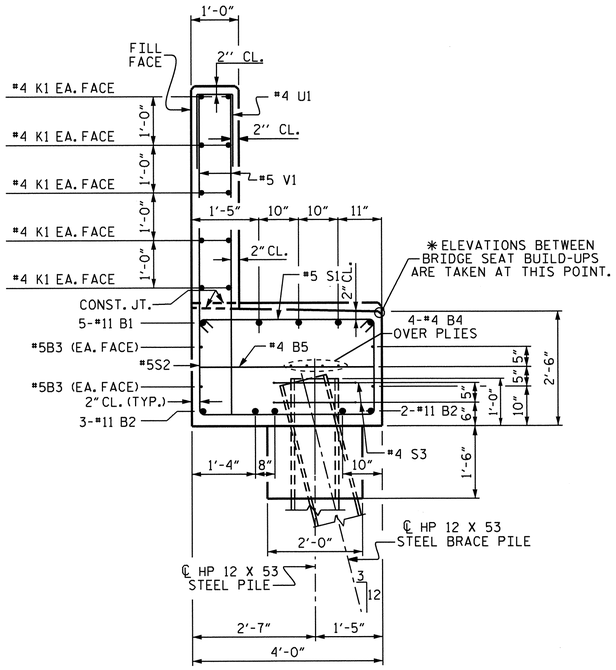

SECTION A-A

(SEE SHEET 1 OF 3)

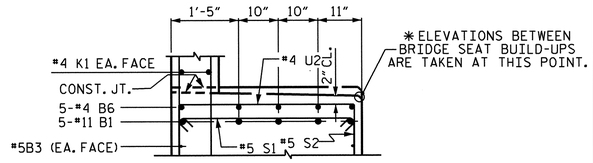

SECTION B-B

(SEE SHEET 1 OF 3)

BAR TYPES

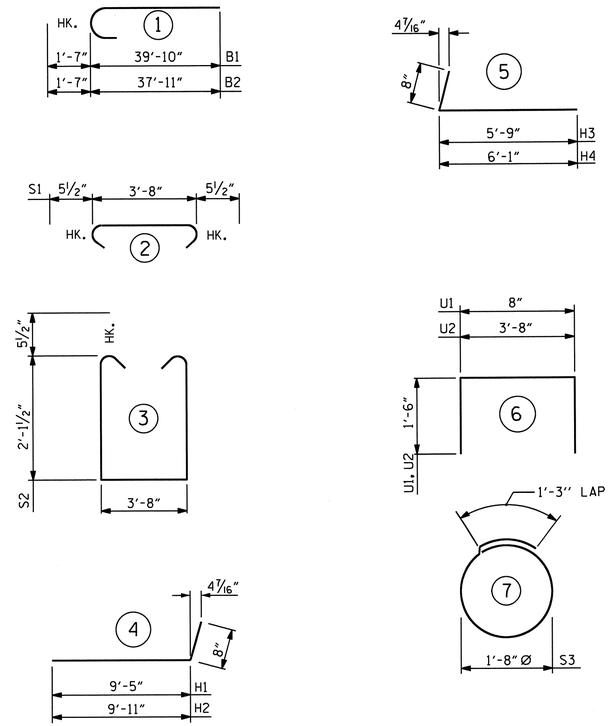

ALL BAR DIMENSIONS ARE OUT TO OUT.

BILL OF MATERIAL

END BENT #2

BAR	NO.	SIZE	TYPE	LENGTH	WEIGHT
B1	10	11	1	41'-5"	2200
B2	10	11	1	39'-6"	2099
B3	8	5	STR	34'-7"	289
B4	12	4	STR	23'-8"	190
B5	17	4	STR	3'-8"	42
B6	10	4	STR	19'-8"	131
H1	11	5	4	10'-1"	116
H2	11	5	4	10'-7"	121
H3	10	5	5	6'-5"	67
H4	10	5	5	6'-9"	70
K1	30	4	STR	23'-8"	474
K2	8	4	STR	3'-1"	16
S1	111	5	2	4'-7"	531
S2	111	5	3	8'-10"	1023
S3	16	4	7	6'-6"	69
U1	59	4	6	3'-8"	145
U2	23	4	6	6'-8"	102
V1	118	5	STR	6'-9"	831
V2	28	5	STR	9'-1"	265
V3	22	5	STR	8'-5"	193
REINFORCING STEEL				LBS	8974

CLASS A CONCRETE BREAKDOWN

POUR #1
CAP, LOWER PART OF WINGS & CONCRETE COLLARS — 31.0 CU. YDS.

POUR #2
BACKWALL & UPPER PART OF WINGS — 15.5 CU. YDS.

CLASS A CONCRETE TOTAL — 46.5 CU. YDS.

HP 12 x 53 STEEL PILES
NO. 8 LIN. FT. 400

PILE REDRIVES 8 EACH

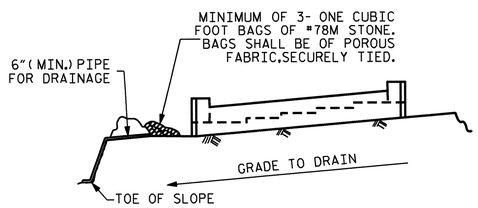

BAGGED STONE AND PIPE SHALL BE PLACED IMMEDIATELY AFTER COMPLETION OF END BENT EXCAVATION. PIPE MAY BE EITHER CONCRETE, CORRUGATED STEEL, CORRUGATED ALUMINUM ALLOY, OR CORRUGATED PLASTIC. PERFORATED PIPE WILL NOT BE ALLOWED.

BAGGED STONE SHALL REMAIN IN PLACE UNTIL THE ENGINEER DIRECTS THAT IT BE REMOVED. THE CONTRACTOR SHALL REMOVE AND DISPOSE OF SILT ACCUMULATIONS AT BAGGED STONE WHEN SO DIRECTED BY THE ENGINEER. BAGS SHALL BE REMOVED AND REPLACED WHENEVER THE ENGINEER DETERMINES THAT THEY HAVE DETERIORATED AND LOST THEIR EFFECTIVENESS.

NO SEPARATE PAYMENT WILL BE MADE FOR THIS WORK AND THE ENTIRE COST OF THIS WORK SHALL BE INCLUDED IN THE UNIT CONTRACT PRICE BID FOR THE SEVERAL PAY ITEMS.

TEMPORARY DRAINAGE AT END BENT

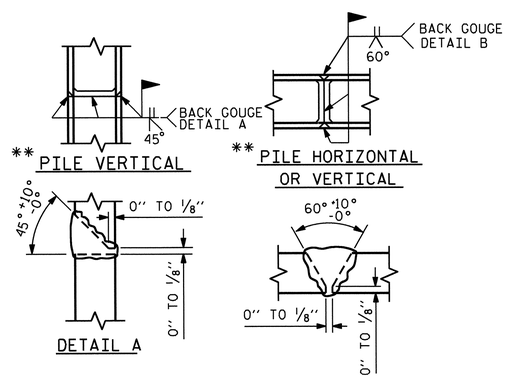

** POSITION OF PILE DURING WELDING.

PILE SPLICE DETAILS

PROJECT NO. R-2707B
CLEVELAND COUNTY
STATION: 247+90.66-L-

SHEET 3 OF 3

STATE OF NORTH CAROLINA
DEPARTMENT OF TRANSPORTATION
RALEIGH

SUBSTRUCTURE
END BENT #2
(LEFT LANE)

NORTH CAROLINA PROFESSIONAL SEAL 15825 ENGINEER BRUCE D. KLAPPENBACH
6-27-2013

REVISIONS						SHEET NO.
NO.	BY:	DATE:	NO.	BY:	DATE:	S-30
1			3			TOTAL SHEETS
2			4			266

DRAWN BY : H. T. BARBOUR DATE : 4-25-12
CHECKED BY : D. A. GLADDEN DATE : 7-12

DESIGN ENGINEER OF RECORD:
S. T. CHAMPION DATE : 5-13

STR. #1

GENERAL NOTES

SLOPE PROTECTION SHALL BE PLACED UNDER THE ENDS OF THE BRIDGE AS SHOWN IN THE DETAILS. STRAIGHT EDGING WILL NOT BE REQUIRED UNLESS, IN THE OPINION OF THE ENGINEER, VISUAL INSPECTION INDICATES A NEED FOR IT. MEASUREMENT AND PAYMENT SHALL BE AS PRESCRIBED IN SECTION 462 OF THE STANDARD SPECIFICATIONS. FOR BERM WIDTH, SEE GENERAL DRAWING.

ALTERNATE "A"

ALTERNATE "A" SHALL CONSIST OF 4" POURED-IN-PLACE CONCRETE PAVING AS SHOWN IN THE DETAILS ON THIS SHEET. CONCRETE SHALL BE CLASS "B". THE CONCRETE SURFACE SHALL BE FLOATED WITH A WOODEN FLOAT AND FINISHED. WELDED WIRE FABRIC REINFORCING SHALL BE 6 X 6 - W1.4 X W1.4, 60" WIDE. SLOPE PROTECTION SHALL BE POURED IN 5' STRIPS AS SHOWN IN THE "POURING DETAIL" WITH 2'-0" LONG #4 BARS PLACED ALONG THE SLOPE BETWEEN STRIPS AT 1'-6" MAXIMUM SPACING. SLOPE PROTECTION MAY BE POURED IN ALTERNATE 4' AND 5' STRIPS AS SHOWN IN THE "OPTIONAL POURING DETAIL" WITH ADJACENT RUNS OF WELDED WIRE FABRIC LAPPING AT LEAST 6". THE COST OF THE WELDED WIRE FABRIC AND #4 BARS, IF USED, SHALL BE INCLUDED IN THE CONTRACT UNIT PRICE BID PER SQUARE YARD FOR SLOPE PROTECTION.

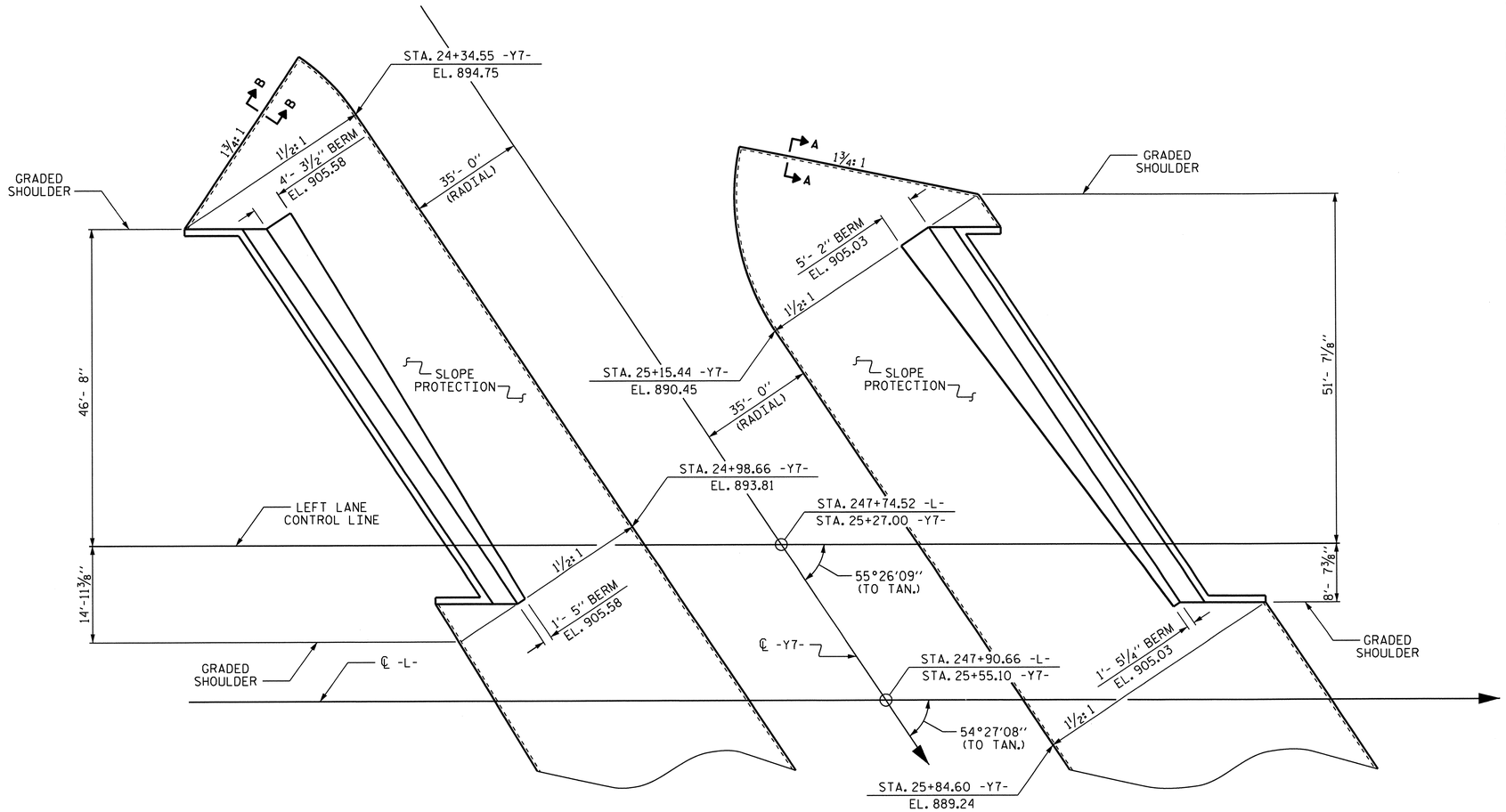

PLAN AT END BENT #1

(1 ½: 1 SLOPE)

PLAN AT END BENT #2

(1 ½: 1 SLOPE)

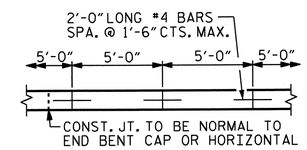

STRIP WIDTHS MAY VARY IN CURVED PORTION.

POURING DETAIL

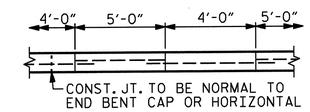

POUR A 4'-0" STRIP FIRST. STRIP WIDTHS MAY VARY IN CURVED PORTION.

OPTIONAL POURING DETAIL

BRIDGE @ STA. 247+90.66 -L- (LEFT LANE)	4" INCH SLOPE PROTECTION	* WELDED WIRE FABRIC 60 INCHES WIDE
	SQUARE YARDS	APPROX. L.F.
END BENT 1	422	844
END BENT 2	502	1124

* QUANTITY SHOWN IS BASED ON 5' POURS.

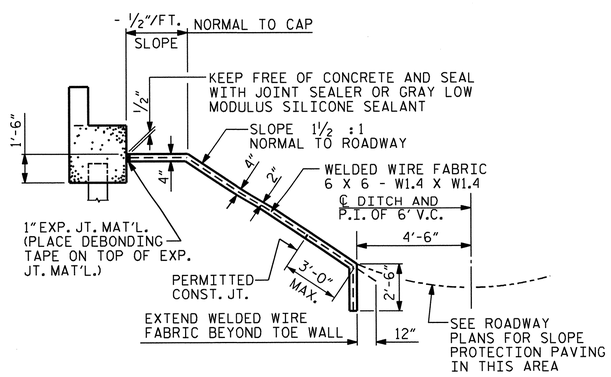

SECTION ALONG ℄ ROADWAY WHEN FILL CATCHES IN DITCH

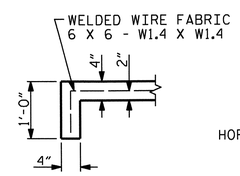

SECTION A-A

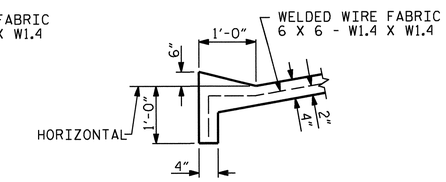

SECTION B-B

PROJECT NO. R-2707B

CLEVELAND COUNTY

STATION: 247+90.66 -L-

STATE OF NORTH CAROLINA
DEPARTMENT OF TRANSPORTATION
RALEIGH

STANDARD

SLOPE PROTECTION DETAILS
LEFT LANE

NORTH CAROLINA PROFESSIONAL SEAL 15825 ENGINEER BRUCE D. KLAPPENBACH
6-27-2013

DESIGN ENGINEER OF RECORD: - DATE: -		
ASSEMBLED BY: D. A. GLADDEN DATE: 8-7-12		
CHECKED BY: B. DUKE DATE: 10-4-12		
DRAWN BY: WJH 10/88	REV. 7/17/98	REK/RWW
CHECKED BY: FCJ 10/88	REV. 5/1/06	TLA/GM
	REV. 10/1/11	MAA/GM

REVISIONS						SHEET NO.
NO.	BY:	DATE:	NO.	BY:	DATE:	S-31
1			3			TOTAL SHEETS
2			4			266

STD. NO. SP2

25-JUN-2013 14:32
R:\Structures\Plans\Bailey\STRland2\dgladden\Microstation\B4821_SD_SP.dgn
dgladden

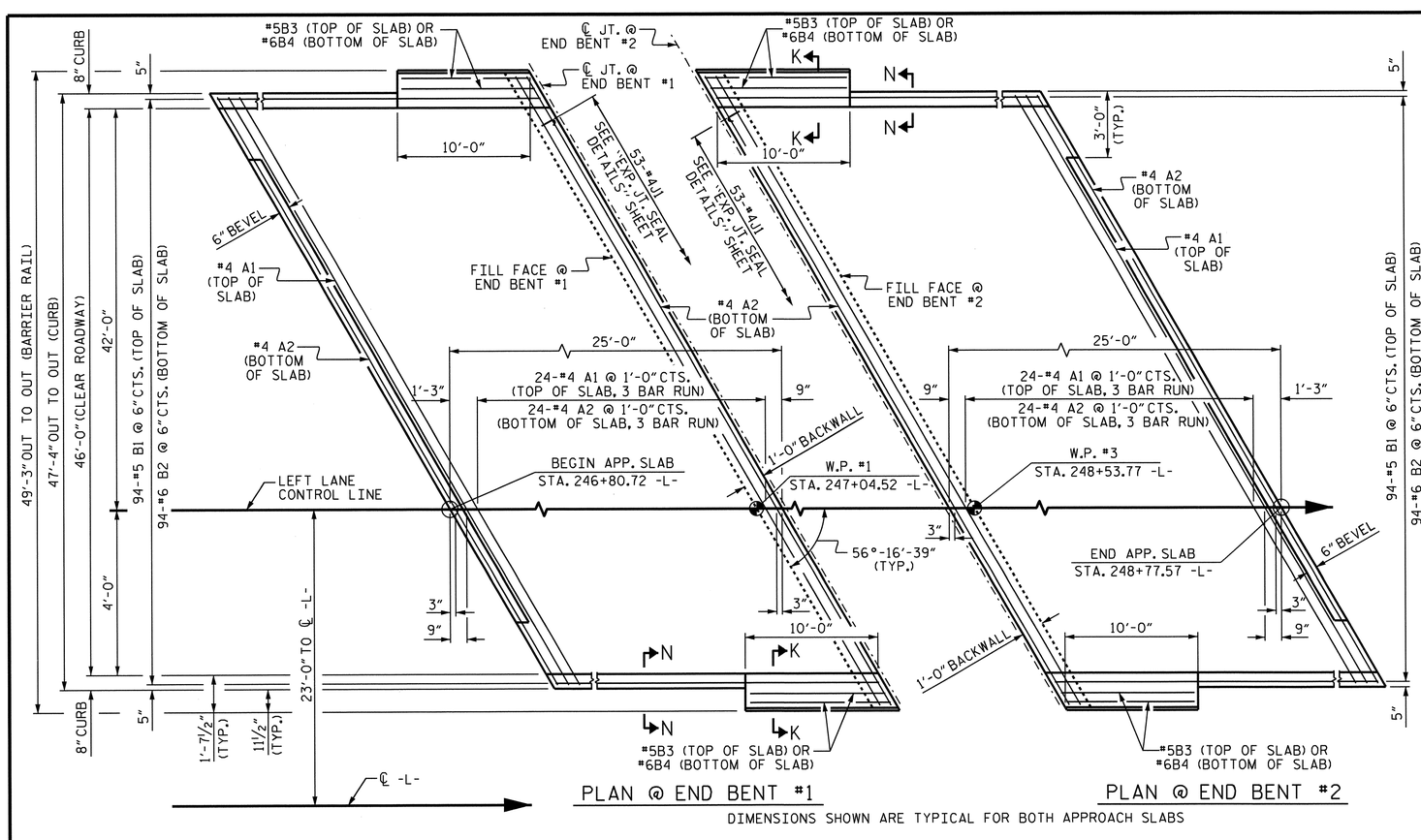

PLAN @ END BENT #1

PLAN @ END BENT #2

DIMENSIONS SHOWN ARE TYPICAL FOR BOTH APPROACH SLABS

NOTES

APPROACH SLAB SHALL NOT BE CONSTRUCTED PRIOR TO COMPLETION OF THE BRIDGE DECK.

FOR REINFORCED BRIDGE APPROACH FILL INCLUDING GEOTEXTILE, IMPERMEABLE GEOMEMBRANE, 4" Ø DRAINAGE PIPE, #78M STONE, AND SELECT MATERIAL, SEE ROADWAY PLANS.

AREA BETWEEN THE WINGWALL AND APPROACH SLAB SHALL BE GRADED TO DRAIN THE WATER AWAY FROM THE FILL FACE OF THE BRIDGE AND SHALL BE PAVED. SEE ROADWAY PLANS.

FOR EXPANSION JOINT SEALS, SEE SPECIAL PROVISIONS.

SPLICE LENGTHS

BAR SIZE	EPOXY COATED	UNCOATED
#4	2'-0"	1'-9"
#5	2'-6"	2'-2"
#6	3'-10"	2'-7"

BILL OF MATERIAL

APPROACH SLAB AT EB #1

BAR	NO.	SIZE	TYPE	LENGTH	WEIGHT
✱A1	75	#4	STR	21'-0"	1052
A2	78	#4	STR	20'-10"	1085
✱B1	94	#5	STR	24'-1"	2361
B2	94	#6	STR	24'-7"	3471
✱B3	4	#5	STR	9'-10"	41
B4	4	#6	STR	9'-10"	59
✱J1	53	#4	1	1'-5"	50
REINFORCING STEEL ✱✱ LBS.					4615
✱EPOXY COATED REINFORCING STEEL ✱✱ LBS.					3504
CLASS AA CONCRETE ✱✱ C. Y.					51.0

APPROACH SLAB AT EB #2

BAR	NO.	SIZE	TYPE	LENGTH	WEIGHT
✱A1	75	#4	STR	21'-0"	1052
A2	78	#4	STR	20'-10"	1085
✱B1	94	#5	STR	24'-1"	2361
B2	94	#6	STR	24'-7"	3471
✱B3	4	#5	STR	9'-10"	41
B4	4	#6	STR	9'-10"	59
✱J1	53	#4	1	1'-5"	50
REINFORCING STEEL ✱✱ LBS.					4615
✱EPOXY COATED REINFORCING STEEL ✱✱ LBS.					3504
CLASS AA CONCRETE ✱✱ C. Y.					51.0

BAR TYPE

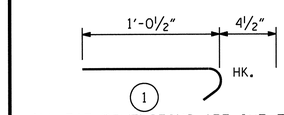

ALL BAR DIMENSIONS ARE OUT TO OUT

✱✱ QUANTITIES FOR BARRIER RAIL ARE NOT INCLUDED. SEE SHEET 2 OF 2.

THE QUANTITY OF #4 J1 BARS ON THE BILL OF MATERIAL IS BASED ON 1'-0" CENTERS. J1 BARS SHALL BE PLACED AT EACH VERTICAL STUD ANCHOR BOLT. IN THE EVENT THAT THE NUMBER OF VERTICAL STUD ANCHORS EXCEEDS THE NUMBER OF J1 BARS SPECIFIED, ADDITIONAL J1 BARS WILL NOT BE REQUIRED.

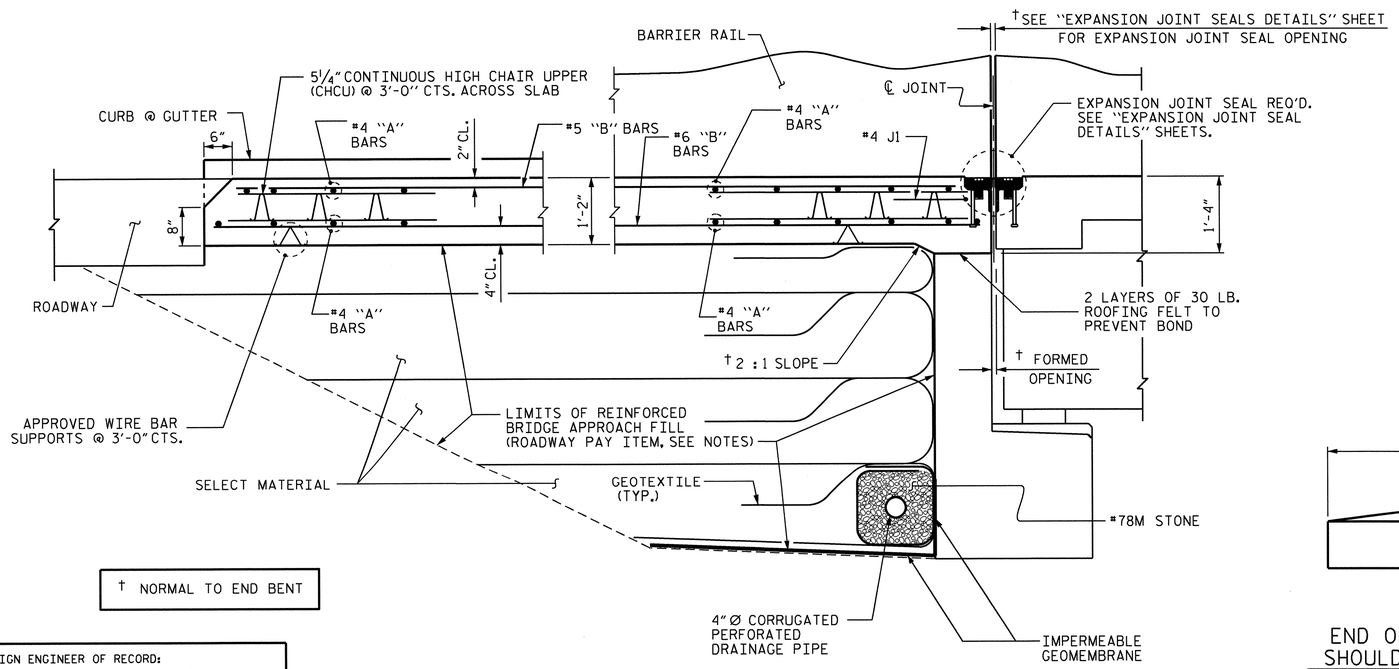

† NORMAL TO END BENT

SECTION THRU SLAB

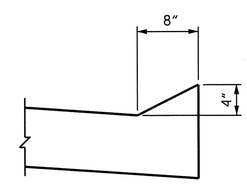

SECTION N-N

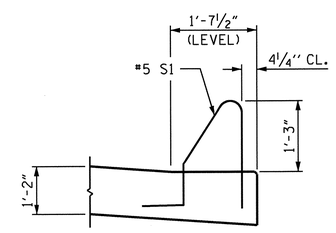

SECTION K-K

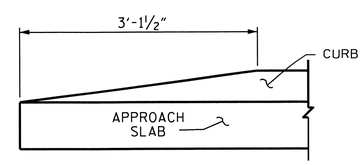

END OF CURB WITHOUT SHOULDER BERM GUTTER

CURB DETAILS

PROJECT NO. R-2707B

CLEVELAND COUNTY

STATION: 247+90.66 -L-

SHEET 1 OF 2

STATE OF NORTH CAROLINA
DEPARTMENT OF TRANSPORTATION
RALEIGH

BRIDGE APPROACH SLAB FOR FLEXIBLE PAVEMENT (LEFT LANE)

REVISIONS						SHEET NO.
NO.	BY:	DATE:	NO.	BY:	DATE:	S-32
1			3			TOTAL SHEETS
2			4			266

NORTH CAROLINA PROFESSIONAL SEAL 15825 ENGINEER BRUCE D. KLAPPENBACH 6-27-2013

DESIGN ENGINEER OF RECORD: - DATE: -			
ASSEMBLED BY: H. T. BARBOUR DATE: 6-4-12			
CHECKED BY: B. A. DUKE DATE: 6-12			
DRAWN BY: EEM 3/95	REV. 5/7/03R	RWW/JTE	
CHECKED BY: VAP 3/95	REV. 5/1/06RR	KMM/GM	
	REV. 10/1/11	MAA/GM	

24-JUN-2013 08:27
K:\Structures\Plans\Bailey\STRland2\tbarbour\Microstation\str-1\R2707B_SD_AS.dgn
tbarbour

STR #1

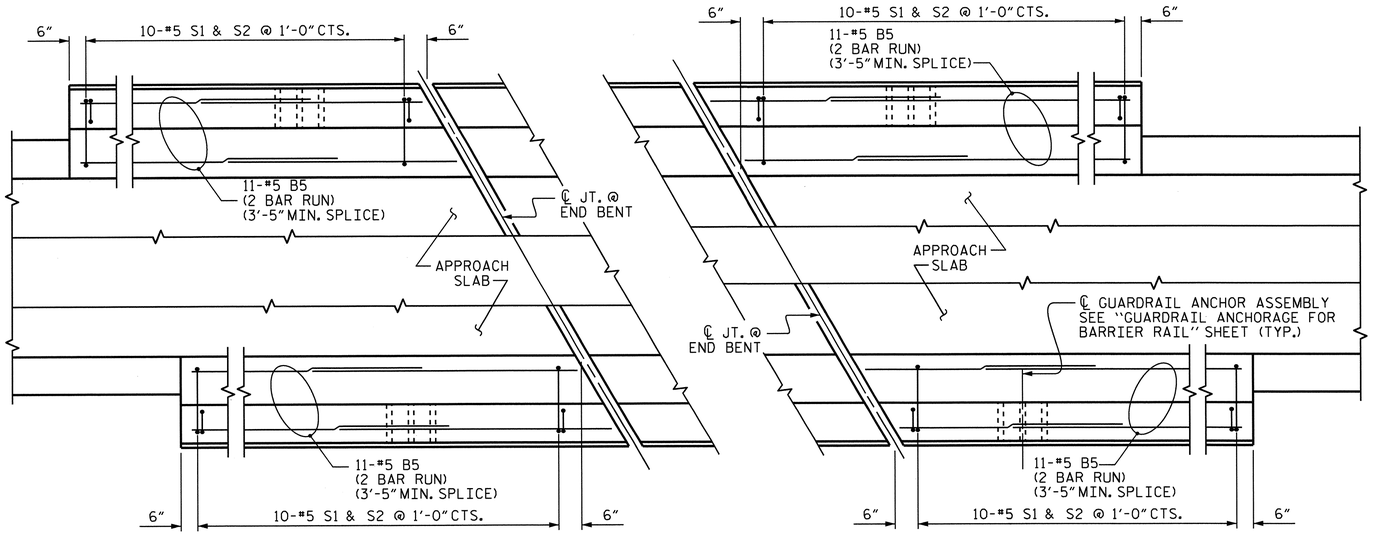

PLAN OF BARRIER RAIL

NOTES

THE COST OF THE BARRIER RAIL ON THE APPROACH SLAB SHALL BE INCLUDED IN THE LINEAR FOOT CONTRACT PRICE BID FOR "CONCRETE BARRIER RAIL".

THE BARRIER RAIL ON EACH APPROACH SLAB SHALL NOT BE CAST UNTIL ALL APPROACH SLAB CONCRETE HAS BEEN CAST AND HAS REACHED A MINIMUM COMPRESSIVE STRENGTH OF 3,000 PSI.

ALL REINFORCING STEEL IN BARRIER RAILS SHALL BE EPOXY COATED.

BAR TYPES

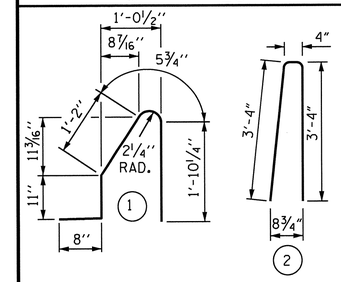

ALL BAR DIMENSIONS ARE OUT TO OUT

BILL OF MATERIAL

BARRIER RAIL ONLY

BAR	NO.	SIZE	TYPE	LENGTH	WEIGHT
* B5	88	#5	STR	7'-0"	642
* S1	40	#5	1	5'-1"	212
* S2	40	#5	2	7'-0"	292
* EPOXY COATED REINFORCING STEEL				LBS.	1146
CLASS AA CONCRETE				C.Y.	5.3
CONCRETE BARRIER RAIL				42.0	LIN. FT.

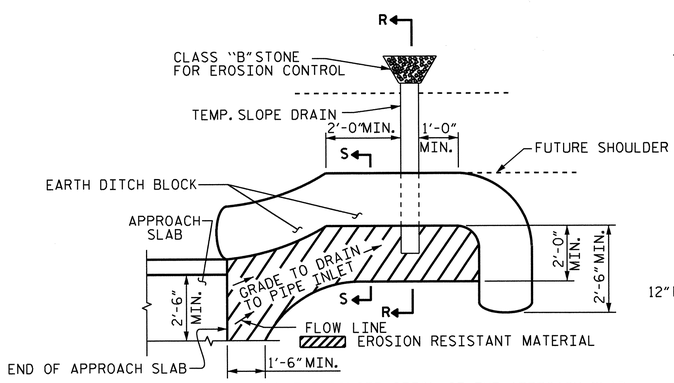

NOTE: IMMEDIATELY AFTER THE CONSTRUCTION OF THE APPROACH SLAB, THE CONTRACTOR SHALL PROVIDE TEMPORARY BERM AND SLOPE DRAIN. CONTRACTOR SHALL GRADE TO PIPE INLET AND PROVIDE EROSION RESISTANT MATERIAL AS SHOWN. THE EROSION RESISTANT MATERIAL SHALL BE EITHER 1) ASPHALT PLANT MIX, TYPE 1 OR TYPE 2, MIN. 2" DEPTH, 2) EROSION CONTROL MAT, OR 3) CONCRETE, AS DIRECTED BY THE ENGINEER. THE SLOPE DRAIN SHALL CONSIST OF A NON-PERFORATED TEMPORARY DRAINAGE PIPE, 12 INCHES IN DIAMETER.

PLAN VIEW

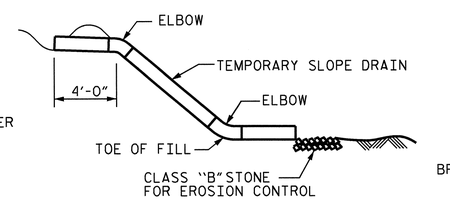

SECTION R-R

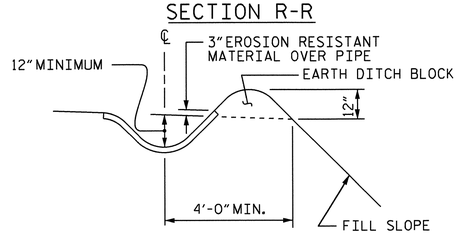

SECTION S-S

TEMPORARY BERM AND SLOPE DRAIN DETAILS

(TO BE USED WHEN SHOULDER BERM GUTTER IS REQUIRED)

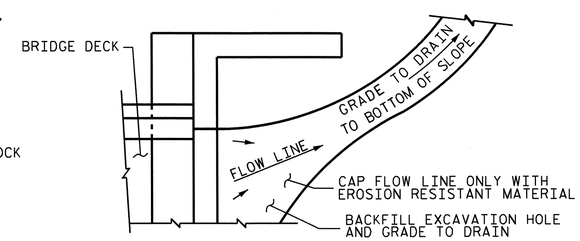

NOTE: IF THE APPROACH SLAB IS NOT CONSTRUCTED IMMEDIATELY AFTER THE BACKFILLING OF THE END BENT EXCAVATION, GRADE TO DRAIN TO THE BOTTOM OF THE SLOPE AND PROVIDE EROSION RESISTANT MATERIAL, SUCH AS FIBERGLASS ROVING OR AS DIRECTED BY THE ENGINEER TO PREVENT SOIL EROSION AND TO PROTECT THE AREA ADJACENT TO THE STRUCTURE. THE CONTRACTOR WILL BE REQUIRED TO REMOVE THESE MATERIALS PRIOR TO CONSTRUCTION OF THE APPROACH SLAB.

TEMPORARY DRAINAGE DETAIL

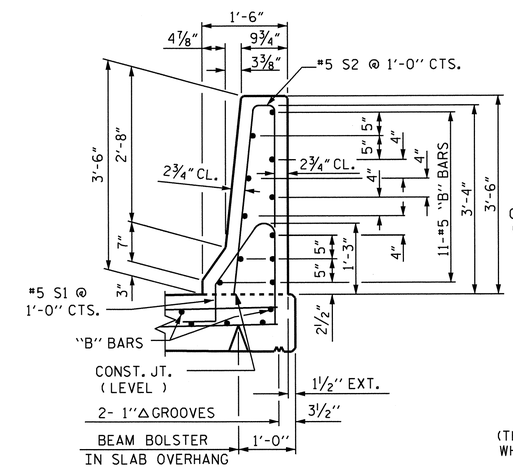

SECTION THRU RAIL

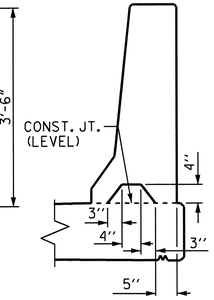

SECTION S-S

AT DAM IN OPEN JOINT
(THIS IS TO BE USED ONLY WHEN SLIP FORM IS USED)

PROJECT NO. R-2707B

CLEVELAND COUNTY

STATION: 247+90.66 -L-

SHEET 2 OF 2

STATE OF NORTH CAROLINA
DEPARTMENT OF TRANSPORTATION
RALEIGH

BRIDGE APPROACH SLAB DETAILS (LEFT LANE)

NORTH CAROLINA PROFESSIONAL SEAL 15825 ENGINEER BRUCE D. KLAPPENBACH
6-27-2013

REVISIONS						SHEET NO.
NO.	BY:	DATE:	NO.	BY:	DATE:	S-33
1			3			TOTAL SHEETS
2			4			266

ASSEMBLED BY :	H. T. BARBOUR	DATE :	6-4-12
CHECKED BY :	B. A. DUKE	DATE :	6-12

DRAWN BY :	FCJ	11/88	REV. 5/7/03	RWW/JTE
CHECKED BY :	ARB	11/88	REV. 5/1/06	RRR MAA/KMM
			REV. 10/1/11	MAA/GM

13-MAY-2013 16:23
K:\Structures\Plans\Bailey\STRland2\tbarbour\Microstation\str-1\R2707B_SD_AS.dgn
tbarbour

STR. #1 STD. NO. BAS4 (SHT 3a)

F.A. PROJECT NO. NHF-74(107)

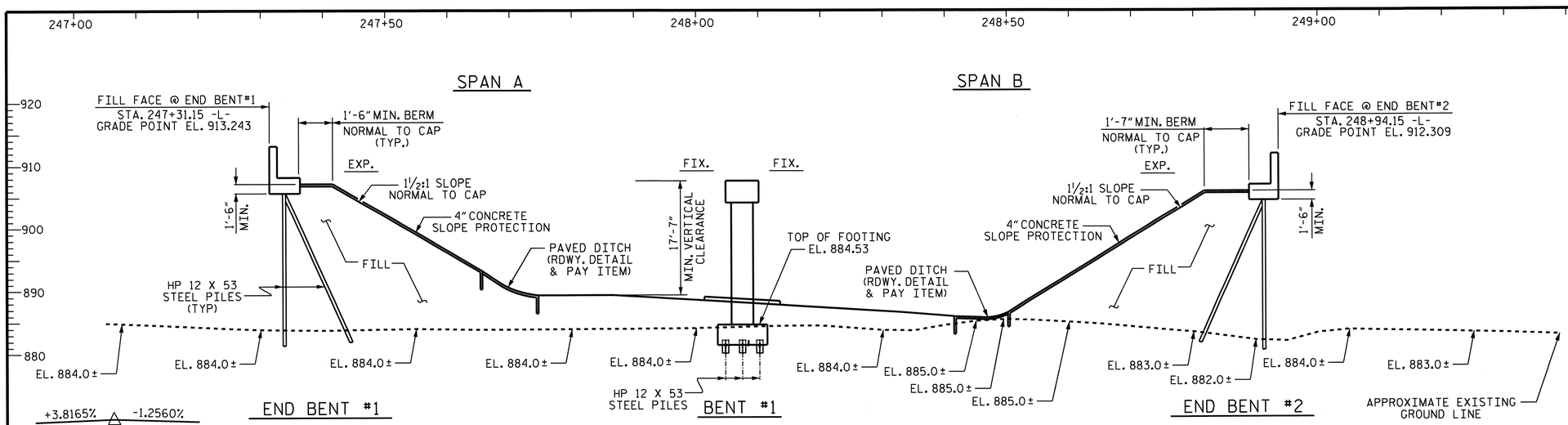

SECTION ALONG CONTROL LINE (RIGHT LANE)

(SECTION TAKEN AT RIGHT ANGLES TO BENTS AND END BENTS)

+3.8165% △ -1.2560%

P. I. = 242+50.00 -L-
EL. = 920.66
V. C. = 1540'

GRADE DATA -L-

HORIZONTAL CURVE DATA (Y7)

PI. STA. 22+28.38
Δ = 35°-05'-01" (LT)
D = 3°-30'-00"
L = 1002.39'
T = 517.46'
R = 1637.02'

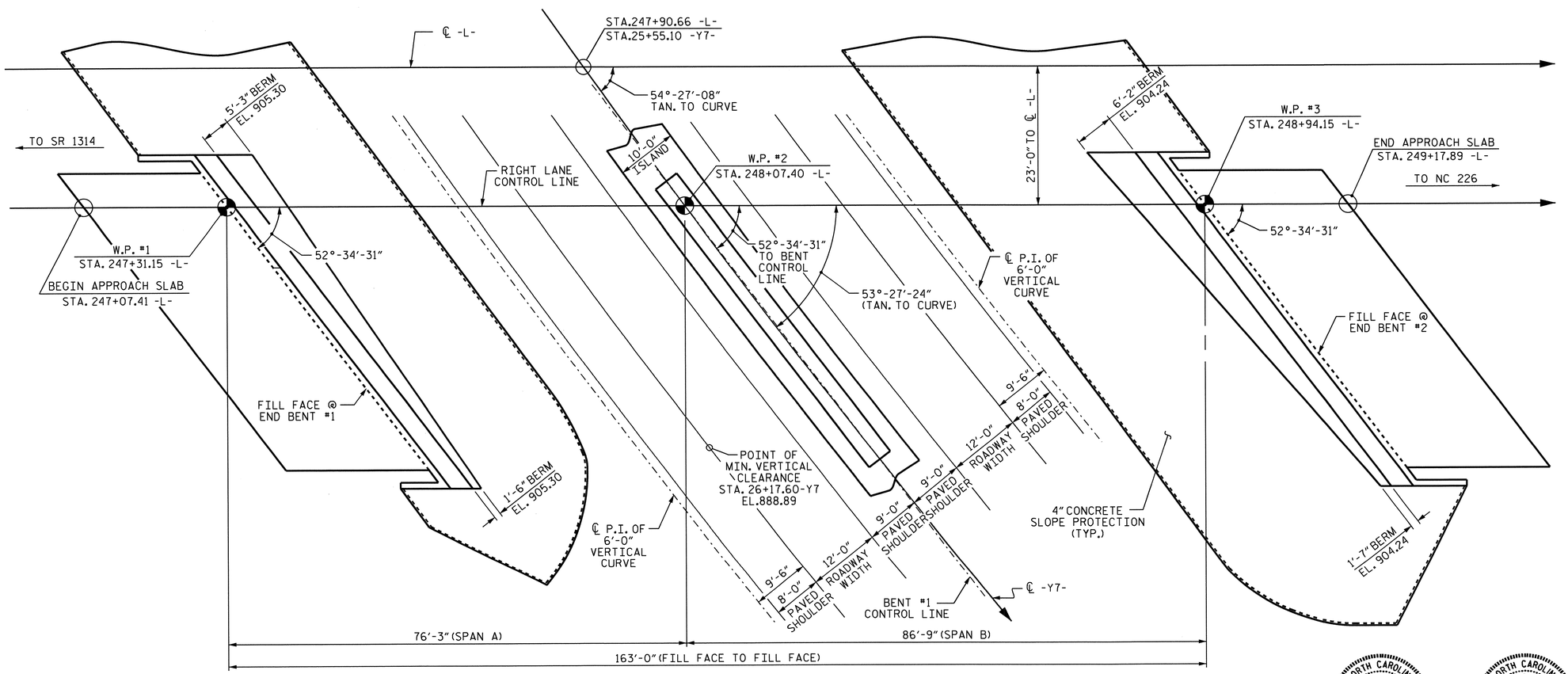

PLAN (RIGHT LANE)

(PILES NOT SHOWN IN PLAN VIEW)

PROJECT NO. R-2707B
CLEVELAND COUNTY
STATION: 247+90.66 -L-
25+55.10 -Y7-

SHEET 1 OF 3

BRIDGE No. 458

STATE OF NORTH CAROLINA
DEPARTMENT OF TRANSPORTATION
RALEIGH

GENERAL DRAWING
FOR BRIDGE ON US 74
OVER SR 1313 BETWEEN
SR 1314 AND NC 226
(RIGHT LANE)

REVISIONS						SHEET NO.
NO.	BY:	DATE:	NO.	BY:	DATE:	S-34
1			3			TOTAL SHEETS
2			4			266

NORTH CAROLINA PROFESSIONAL SEAL 13014 ENGINEER QUANG H. NGUYEN
Quang H. Nguyen 6-27-13

NORTH CAROLINA PROFESSIONAL SEAL 15825 ENGINEER BRADFORD D. KLAPPERICH
6-27-2013

DESIGN ENGINEER OF RECORD: S. T. CHAMPION DATE: 5-13
DRAWN BY: H. T. BARBOUR DATE: 05-07-12
CHECKED BY: D. A. GLADDEN DATE: 12-12

24-JUN-2013 08:35
K:\Structures\Plans\Bailey\STRland2\tbarbour\Microstation\str-2\R-2707B_SD_GD.dgn
tbarbour

STR #2

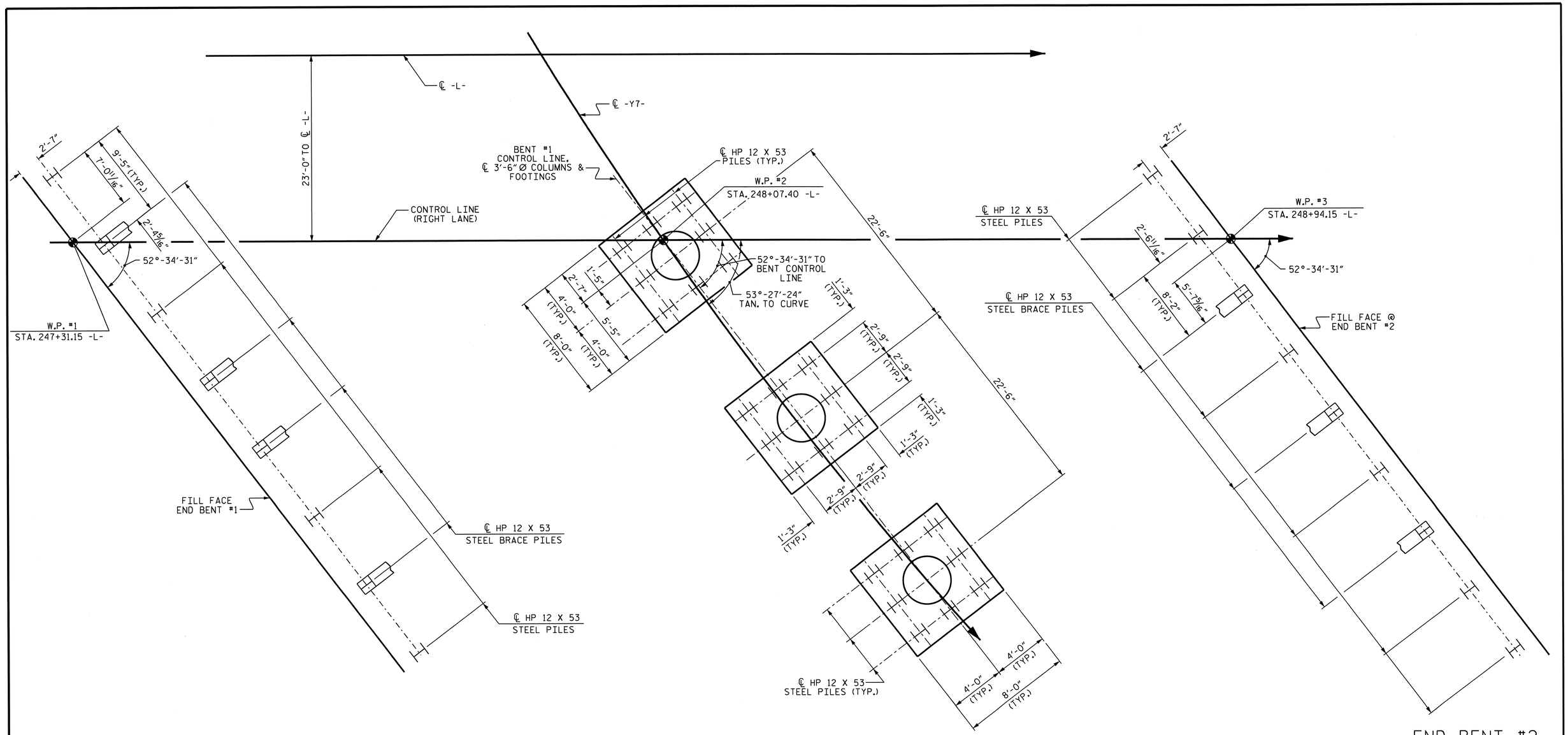

FOUNDATION LAYOUT

NOTES

FOR PILES, SEE SECTION 450 OF THE STANDARD SPECIFICATIONS.

TESTING THE PILES WITH THE PDA DURING DRIVING, RESTRIKING OR REDRIVING MAY BE REQUIRED. THE ENGINEER WILL DETERMINE THE NEED FOR PDA TESTING. FOR PDA TESTING, SEE SECTION 450 OF THE STANDARD SPECIFICATIONS.

PILES AT END BENT NO. 1 ARE DESIGNED FOR A FACTORED RESISTANCE OF 105 TONS PER PILE.

DRIVE PILES AT END BENT NO. 1 TO A REQUIRED DRIVING RESISTANCE OF 175 TONS PER PILE.

PILES AT BENT NO. 1 ARE DESIGNED FOR A FACTORED RESISTANCE OF 85 TONS PER PILE.

DRIVE PILES AT BENT NO. 1 TO A REQUIRED DRIVING RESISTANCE OF 142 TONS PER PILE.

PILES AT END BENT NO. 2 ARE DESIGNED FOR A FACTORED RESISTANCE OF 100 TONS PER PILE.

DRIVE PILES AT END BENT NO. 2 TO A REQUIRED DRIVING RESISTANCE OF 167 TONS PER PILE.

PROJECT NO. R-2707B
CLEVELAND COUNTY
STATION: 247+90.66 -L-

SHEET 2 OF 3

STATE OF NORTH CAROLINA
DEPARTMENT OF TRANSPORTATION
RALEIGH

GENERAL DRAWING FOR BRIDGE ON US 74 OVER SR 1313 BETWEEN SR 1314 AND NC 226 (RIGHT LANE)

NORTH CAROLINA PROFESSIONAL SEAL 15825 BRIDGE ENGINEER D. KLAPPENBACH
6-27-2013

REVISIONS						
NO.	BY:	DATE:	NO.	BY:	DATE:	
1			3			
2			4			

SHEET NO. S-35
TOTAL SHEETS 266

DESIGN ENGINEER OF RECORD: S. T. CHAMPION DATE: 5-13
DRAWN BY: H. T. BARBOUR DATE: 05-09-12
CHECKED BY: D. A. GLADDEN DATE: 12-12

13-MAY-2013 16:24
K:\Structures\Plans\Bailey\STRland2\tbarbour\Microstation\str-2\R-2707B_SD_GD.dgn
tbarbour

STR. #2

BENCHMARK #10-8" NAIL IN ROOT OF 18"Ø WHITE PINE 91.16' LEFT OF STA. 249+98.11 -L-, EL. 881.23

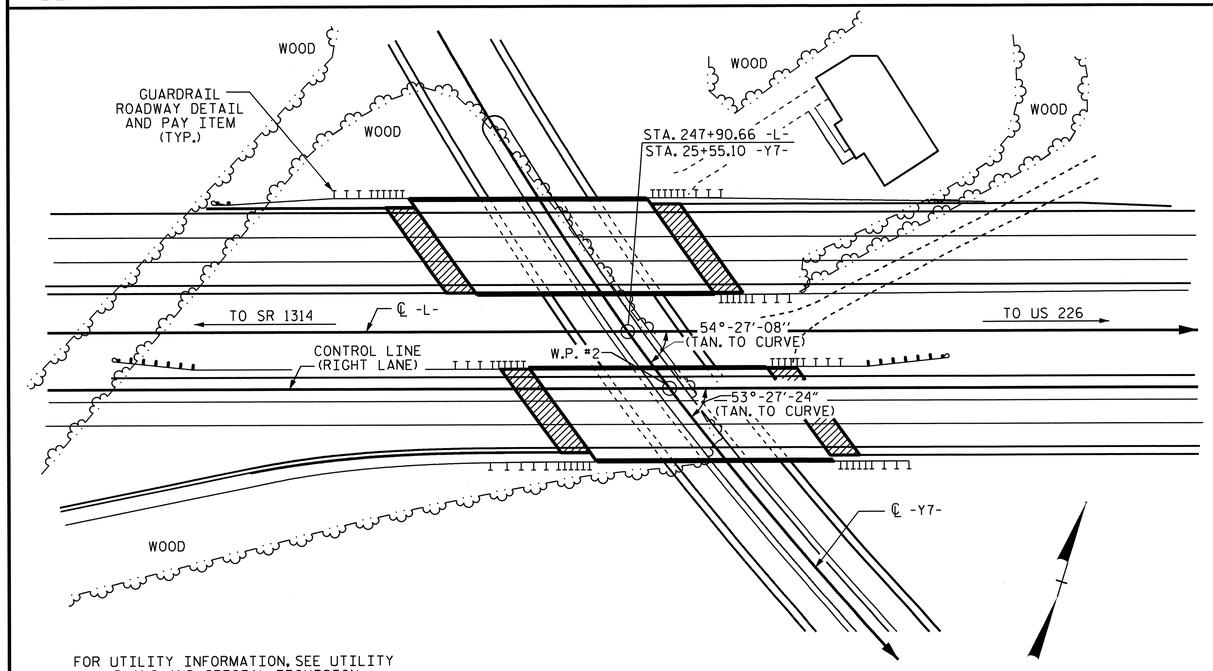

FOR UTILITY INFORMATION, SEE UTILITY PLANS AND SPECIAL PROVISION.

LOCATION SKETCH

NOTES

ASSUMED LIVE LOAD = HL 93 OR ALTERNATE LOADING.

FOR OTHER DESIGN DATA AND GENERAL NOTES, SEE SHEET SN.

THIS BRIDGE HAS BEEN DESIGNED IN ACCORDANCE WITH THE AASHTO LRFD BRIDGE DESIGN SPECIFICATIONS.

FOR EROSION CONTROL MEASURES SEE EROSION CONTROL PLANS.

REMOVABLE FORMS MAY BE USED IN LIEU OF METAL STAY-IN-PLACE FORMS IN ACCORDANCE WITH ARTICLE 420-3 OF THE STANDARD SPECIFICATIONS.

THE CLASS AA CONCRETE IN THE BRIDGE DECK SHALL CONTAIN FLY ASH OR GROUND GRANULATED BLAST FURNACE SLAG AT THE SUBSTITUTION RATE SPECIFIED IN ARTICLE 1024-1 AND IN ACCORDANCE WITH ARTICLES 1024-5 AND 1024-6 OF THE STANDARD SPECIFICATIONS. NO PAYMENT WILL BE MADE FOR THIS SUBSTITUTION AS IT IS CONSIDERED INCIDENTAL TO THE COST OF THE REINFORCED CONCRETE DECK SLAB.

THE CONTRACTOR SHALL PROVIDE INDEPENDENT ASSURANCE SAMPLES OF REINFORCING STEEL AS FOLLOWS: FOR PROJECTS REQUIRING UP TO 400 TONS OF REINFORCING STEEL, ONE 30 INCH SAMPLE OF EACH SIZE BAR USED, AND FOR PROJECTS REQUIRING OVER 400 TONS OF REINFORCING STEEL, TWO 30 INCH SAMPLES OF EACH SIZE BAR USED. THE BARS FROM WHICH THE SAMPLES ARE TAKEN MUST THEN BE SPLICED WITH REPLACEMENT BARS OF THE SIZE AND LENGTH OF THE SAMPLE, PLUS A MINIMUM LAP SPLICE OF THIRTY BAR DIAMETERS. PAYMENT FOR THE SAMPLES OF REINFORCING STEEL SHALL BE CONSIDERED INCIDENTAL TO VARIOUS PAY ITEMS.

PRESTRESSED CONCRETE DECK PANELS MAY BE USED IN LIEU OF METAL STAY-IN-PLACE FORMS IN ACCORDANCE WITH ARTICLE 420-3 OF THE STANDARD SPECIFICATIONS.

NEEDLE BEAMS WILL NOT BE ALLOWED UNLESS OTHERWISE CALLED FOR ON THE PLANS OR APPROVED BY THE ENGINEER.

FOR SUBMITTAL OF WORKING DRAWINGS, SEE SPECIAL PROVISIONS.

FOR FALSEWORK AND FORMWORK, SEE SPECIAL PROVISIONS.

FOR CRANE SAFETY, SEE SPECIAL PROVISIONS.

FOR GROUT FOR STRUCTURES, SEE SPECIAL PROVISIONS.

FOR PLACING LOAD ON STRUCTURE MEMBERS, SEE SPECIAL PROVISIONS.

FOR MAINTENANCE AND PROTECTION OF TRAFFIC BENEATH PROPOSED STRUCTURE, SEE SPECIAL PROVISIONS.

OBSERVE A THREE MONTH WAITING PERIOD AFTER CONSTRUCTING THE EMBANKMENT TO FINISHED GRADE BEFORE BEGINNING END BENT CONSTRUCTION AT END BENT Nos. 1 AND 2. THE WAITING PERIODS MAY BE REDUCED BY THE ENGINEER AFTER THE REVIEW AND ACCEPTANCE OF SETTLEMENT DATA THAT HAS BEEN OBTAINED BY EMBANKMENT MONITORING USING SURVEY HUBS. INSTALLATION AND MONITORING WILL BE THE RESPONSIBILITY OF THE CONTRACTOR AND WILL BE CONSIDERED INCIDENTAL TO THE PROJECT.

THIS BRIDGE IS LOCATED IN SEISMIC ZONE 1

TOTAL BILL OF MATERIAL

	FOUNDATION EXCAVATION	PDA TESTING	REINFORCED CONCRETE DECK SLAB	GROOVING BRIDGE FLOORS	CLASS A CONCRETE	BRIDGE APPROACH SLABS	REINFORCING STEEL	SPIRAL COLUMN REINFORCING STEEL	54" PRESTRESSED CONCRETE GIRDERS		HP 12 X 53 STEEL PILES		PILE REDRIVES	CONCRETE BARRIER RAIL	4" SLOPE PROTECTION	ELASTOMERIC BEARINGS	EXPANSION JOINT SEALS	APPLICATION OF BRIDGE COATING *
	LUMP SUM	EA.	SQ. FT.	SQ. FT.	CU. YDS.	LUMP SUM	LBS.	LBS.	NO.	LIN. FT.	NO.	LIN. FT.	EA.	LIN. FT.	SQ. YDS.	LUMP SUM	LUMP SUM	LUMP SUM
SUPERSTRUCTURE			7897	8858		LUMP SUM			10	784.38				362.70		LUMP SUM	LUMP SUM	LUMP SUM
END BENT NO. 1					49.6		9889				8	400	8		452			
BENT NO. 1	LUMP SUM				86.9		10642	1417			24	1360	24					
END BENT NO. 2					50.9		9543				9	390	9		451			
TOTAL	LUMP SUM	1	7897	8858	187.4	LUMP SUM	30074	1417	10	784.38	41	2150	41	362.70	903	LUMP SUM	LUMP SUM	LUMP SUM

* APPROXIMATE SURFACE AREA TO BE PAINTED = 6370 SF

NORTH CAROLINA PROFESSIONAL SEAL 15825 ENGINEER BRUCE D. KLAPPENBACH
3-5-2014

PROJECT NO. R-2707B
CLEVELAND COUNTY
STATION: 247+90.66 -L-

SHEET 3 OF 3

STATE OF NORTH CAROLINA
DEPARTMENT OF TRANSPORTATION
RALEIGH

GENERAL DRAWING FOR BRIDGE ON US 74 OVER SR 1313 BETWEEN SR 1314 AND NC 226 (RIGHT LANE)

REVISIONS						SHEET NO.
NO.	BY:	DATE:	NO.	BY:	DATE:	S-36
1			3			TOTAL SHEETS
2			4			266

DRAWN BY : H. T. BARBOUR DATE : 05-07-12
CHECKED BY : D. A. GLADDEN DATE : 12-12

05-MAR-2014 14:07
R:\Structures\Plans\Bailey\STRland2\tbarbour\Microstation\str-2\R-2707B_SD_GD.dgn
bklappenbach

STR. #2 NC0005

LOAD AND RESISTANCE FACTOR RATING (LRFR) SUMMARY FOR PRESTRESSED CONCRETE GIRDERS

LEVEL		VEHICLE	WEIGHT (W) (TONS)	CONTROLLING LOAD RATING (#)	MINIMUM RATING FACTORS (RF)	TONS = W X RF	STRENGTH I LIMIT STATE											SERVICE III LIMIT STATE						COMMENT NUMBER
								MOMENT					SHEAR						MOMENT					
							LIVELOAD FACTORS	DISTRIBUTION FACTORS (DF)	RATING FACTOR	SPAN	GIRDER LOCATION	DISTANCE FROM LEFT END OF SPAN (ft)	DISTRIBUTION FACTORS (DF)	RATING FACTOR	SPAN	GIRDER LOCATION	DISTANCE FROM LEFT END OF SPAN (ft)	LIVELOAD FACTORS	DISTRIBUTION FACTORS (DF)	RATING FACTOR	SPAN	GIRDER LOCATION	DISTANCE FROM LEFT END OF SPAN (ft)	
DESIGN LOAD RATING		HL-93(Inv)	N/A	1	1.07	--	1.75	0.796	1.64	B	EL	41.134	1.106	2.05	A	I	3.588	0.80	1.108	1.07	B	I	41.134	
		HL-93(Opr)	N/A	--	2.13	--	1.35	0.796	2.13	B	EL	41.134	1.106	2.66	A	I	3.588	N/A	--	--	--	--	--	
		HS-20(Inv)	36.000	2	1.44	51.672	1.75	0.796	2.2	B	EL	41.134	1.106	2.43	A	I	28.707	0.80	0.769	1.44	B	I	41.134	
		HS-20(Opr)	36.000	--	2.85	102.577	1.35	0.796	2.85	B	EL	41.134	1.106	3.15	A	I	28.707	N/A	--	--	--	--	--	
LEGAL LOAD RATING	SV	SNSH	13.500	--	3.31	44.720	1.4	0.787	6.21	A	I	35.884	1.106	6.76	A	I	28.707	0.80	0.769	3.31	B	I	41.134	
		SNGARBS2	20.000	--	2.44	48.745	1.4	0.787	4.64	A	I	35.884	1.106	4.95	A	I	28.707	0.80	0.769	2.44	B	I	41.134	
		SNAGRIS2	22.000	--	2.3	50.495	1.4	0.796	4.39	B	EL	41.134	1.106	4.65	A	I	28.707	0.80	0.769	2.30	B	I	41.134	
		SNCOTTS3	27.250	--	1.65	44.896	1.4	0.787	3.09	A	I	35.884	1.106	3.39	A	I	28.707	0.80	0.769	1.65	B	I	41.134	
		SNAGGRS4	34.925	--	1.37	47.665	1.4	0.787	2.59	A	I	35.884	1.106	2.91	A	I	28.707	0.80	0.769	1.36	B	I	41.134	
		SNS5A	35.550	--	1.34	47.474	1.4	0.787	2.53	A	I	35.884	1.106	3.01	A	I	28.707	0.80	0.769	1.34	B	I	41.134	
		SNS6A	39.950	--	1.22	48.750	1.4	0.787	2.32	A	I	35.884	1.106	2.79	A	I	28.707	0.80	0.769	1.22	B	I	41.134	
		SNS7B	42.000	--	1.16	48.800	1.4	0.787	2.21	A	I	35.884	1.106	2.8	A	I	28.707	0.80	0.769	1.16	B	I	41.134	
	TTST	TNAGRIT3	33.000	--	1.49	49.058	1.4	0.787	2.83	A	I	35.884	1.106	3.28	A	I	28.707	0.80	0.769	1.49	B	I	41.134	
		TNT4A	33.075	--	1.49	49.341	1.4	0.787	2.84	A	I	35.884	1.106	3.15	A	I	28.707	0.80	0.769	1.49	B	I	41.134	
		TNT6A	41.600	--	1.22	50.545	1.4	0.796	2.33	B	EL	41.134	1.106	3.08	A	I	3.588	0.80	0.769	1.22	B	I	41.134	
		TNT7A	42.000	--	1.22	51.180	1.4	0.796	2.33	B	EL	41.134	1.106	3.02	A	I	28.707	0.80	0.769	1.22	B	I	41.134	
		TNT7B	42.000	--	1.25	52.689	1.4	0.796	2.4	B	EL	41.134	1.106	2.69	A	I	28.707	0.80	0.769	1.25	B	I	41.134	
		TNAGRIT4	43.000	--	1.2	51.513	1.4	0.796	2.29	B	EL	41.134	1.106	2.59	A	I	28.707	0.80	0.769	1.20	B	I	41.134	
		TNAGT5A	45.000	--	1.13	50.926	1.4	0.796	2.17	B	EL	41.134	1.106	2.65	A	I	28.707	0.80	0.769	1.13	B	I	41.134	
		TNAGT5B	45.000	3	1.12	50.396	1.4	0.787	2.14	A	I	35.884	1.106	2.46	A	I	28.707	0.80	0.769	1.12	B	I	41.134	

LOAD FACTORS:

DESIGN LOAD RATING FACTORS	LIMIT STATE	γ_{DC}	γ_{DW}
	STRENGTH I	1.25	1.50
	SERVICE III	1.00	1.00

NOTES:

MINIMUM RATING FACTORS ARE BASED ON THE STRENGTH I AND SERVICE III LIMIT STATES.

ALLOWABLE STRESSES FOR SERVICE III LIMIT STATE ARE AS REQUIRED FOR DESIGN.

COMMENTS:

1.
2.
3.
4.

(#) CONTROLLING LOAD RATING

(1) DESIGN LOAD RATING (HL-93)

(2) DESIGN LOAD RATING (HS-20)

(3) LEGAL LOAD RATING **

** SEE CHART FOR VEHICLE TYPE

GIRDER LOCATION

I - INTERIOR GIRDER
EL - EXTERIOR LEFT GIRDER
ER - EXTERIOR RIGHT GIRDER

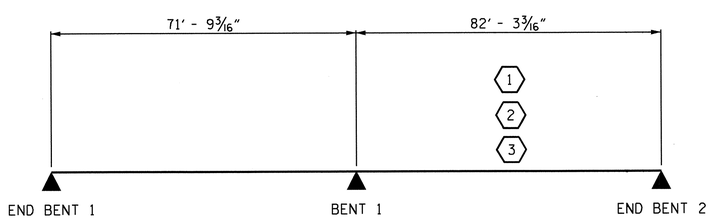

LRFR SUMMARY

PROJECT NO. R-2707B
CLEVELAND COUNTY
STATION: 247+90.66 -L-
RIGHT LANE

STATE OF NORTH CAROLINA
DEPARTMENT OF TRANSPORTATION
RALEIGH

STANDARD
LRFR SUMMARY FOR PRESTRESSED CONCRETE GIRDERS
(NON-INTERSTATE TRAFFIC)

NORTH CAROLINA PROFESSIONAL SEAL 15875 ENGINEER BRUCE D. KLAPPENBACH
6-27-2013

REVISIONS						SHEET NO.
NO.	BY:	DATE:	NO.	BY:	DATE:	S-37
1			3			TOTAL SHEETS
2			4			266

STD. NO. LRFR1

ASSEMBLED BY : S.T. CHAMPION DATE : 06-2012
CHECKED BY : B.A. DUKE DATE : 08-2012
DRAWN BY : MAA 1/08
CHECKED BY : GM/DI 2/08
REV. 11/12/08R MAA/GM

14-MAY-2013 18:44
R:\Structures\Plans\Bailey\STRIand2\schampion\Microstation\R2707B_SD_PCG_RATING_RTLN.dgn
bklappenbach

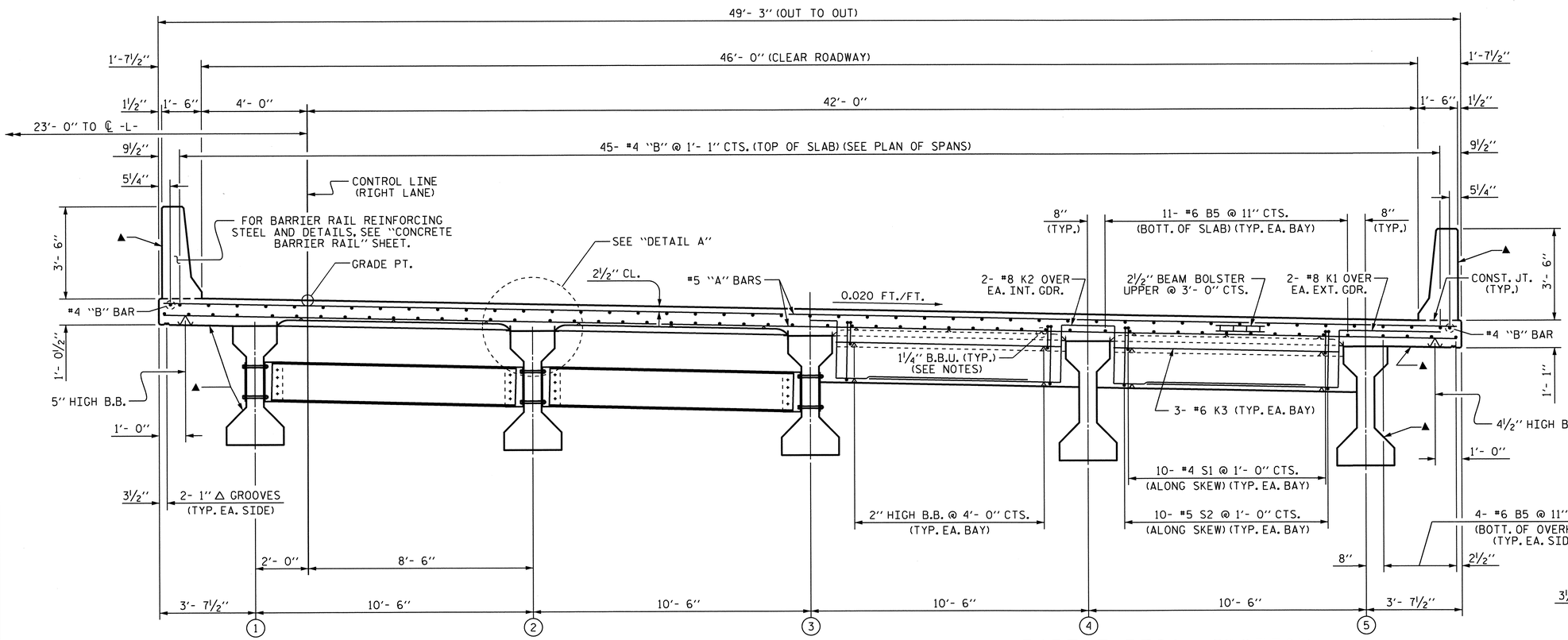

▲ FOR SURFACES TO BE PAINTED, SEE BRIDGE COATING DETAIL. SEE SPECIAL PROVISION FOR "APPLICATION OF BRIDGE COATING".

PART TYPICAL SECTION

(SHOWING INTERMEDIATE DIAPHRAGMS)

PART TYPICAL SECTION

(SHOWING END BENT DIAPHRAGMS)

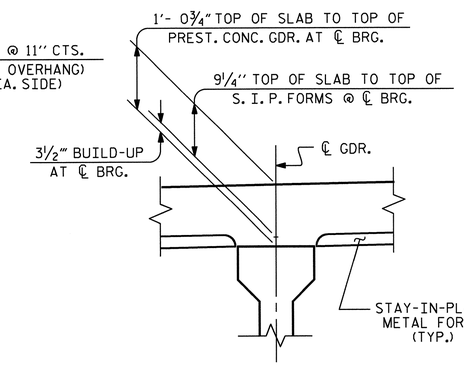

DETAIL A

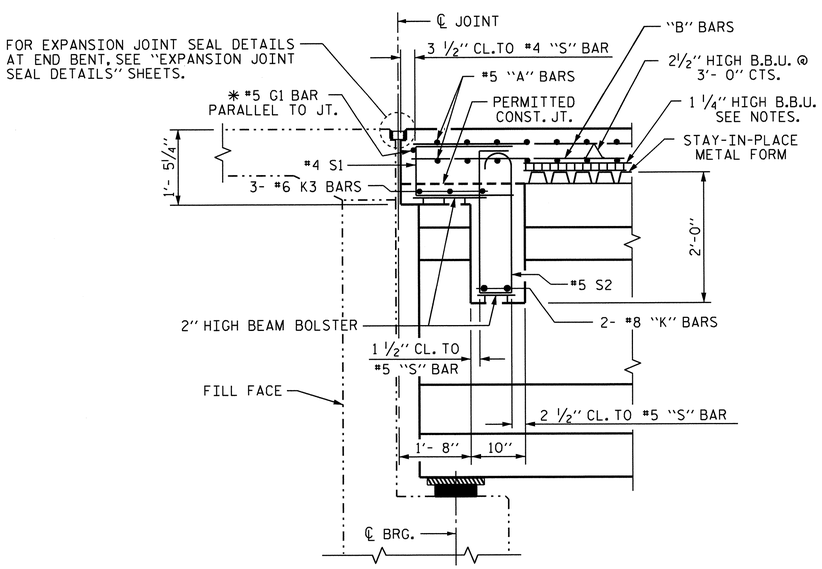

SECTION THRU END BENT DIAPHRAGM

✱ #5 G1 MAY BE SHIFTED SLIGHTLY AS NECESSARY TO CLEAR REINFORCING STEEL AND STIRRUPS.

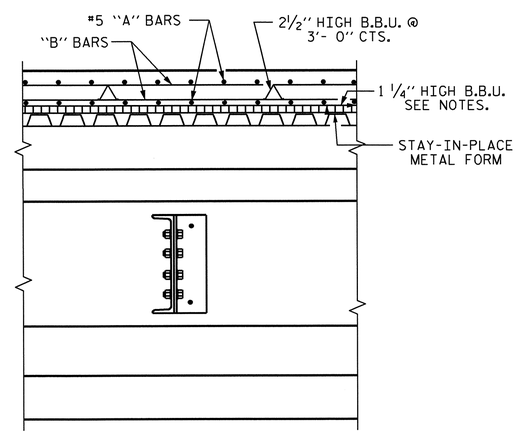

SECTION THRU INTERMEDIATE DIAPHRAGM

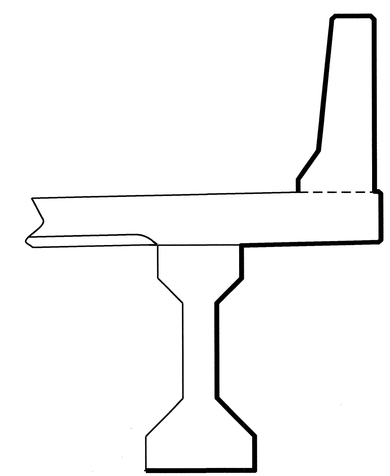

PAINTED SURFACES. (SEE "APPLICATION OF BRIDGE COATING" SPECIAL PROVISION.)

BRIDGE COATING DETAIL

RIGHT SIDE SHOWN. LEFT SIDE TYPICAL.

NORTH CAROLINA PROFESSIONAL SEAL 19825 ENGINEER BRIAN E. D. KLAPPENBACH 3-5-2014

PROJECT NO. R-2707B

CLEVELAND COUNTY

STATION: 247+90.66 -L-

SHEET 1 OF 3

STATE OF NORTH CAROLINA
DEPARTMENT OF TRANSPORTATION
RALEIGH

SUPERSTRUCTURE TYPICAL SECTION (RIGHT LANE)

REVISIONS						SHEET NO.
NO.	BY:	DATE:	NO.	BY:	DATE:	S-38
1			3			TOTAL SHEETS
2			4			266

STR. #2

DESIGN ENGINEER OF RECORD: S. T. CHAMPION DATE: 5-13-13
DRAWN BY: D. A. GLADDEN DATE: 10-4-10
CHECKED BY: H. T. BARBOUR DATE: 1-5-12

05-MAR-2014 12:21
R:\Structures\Plans\Bailey\STRland2\dgladden\Microstation\R2707B_SD_STR2.dgn
bklappenbach

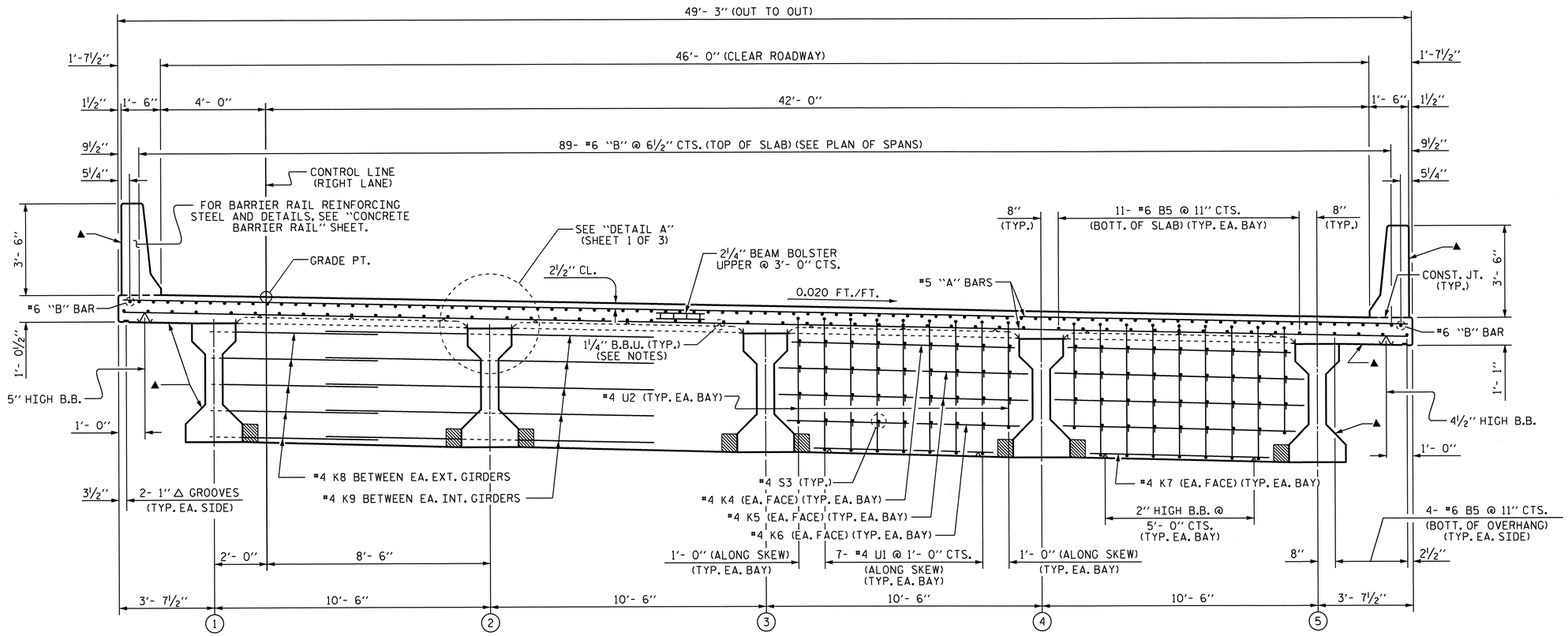

▲ FOR SURFACES TO BE PAINTED, SEE BRIDGE COATING DETAIL, SHEET 1 OF 3. SEE SPECIAL PROVISION FOR "APPLICATION OF BRIDGE COATING".

TYPICAL SECTION

(SHOWING BENT DIAPHRAGMS)

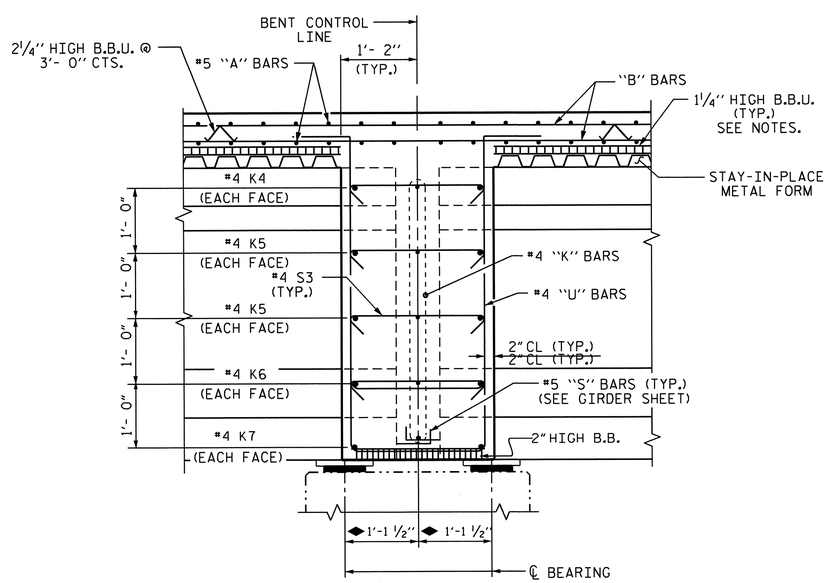

SECTION THRU BENT DIAPHRAGM

◆ MEASURED ALONG ℄ GIRDER

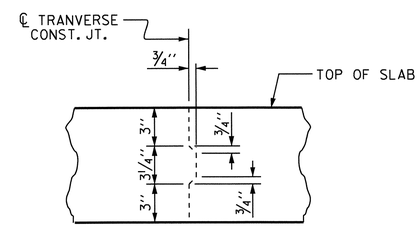

TRANSVERSE CONSTRUCTION JOINT DETAIL

NOTE: REINFORCING STEEL IN SLAB NOT SHOWN. LONGITUDINAL REINFORCING STEEL SHALL BE CONTINUOUS THRU JOINT

PROJECT NO. R-2707B
CLEVELAND COUNTY
STATION: 247+90.66 -L-

SHEET 2 OF 3

STATE OF NORTH CAROLINA
DEPARTMENT OF TRANSPORTATION
RALEIGH

SUPERSTRUCTURE
TYPICAL SECTION
(RIGHT LANE)

NORTH CAROLINA PROFESSIONAL SEAL 15825 ENGINEER BRUCE D. KLAPPENBACH 3-5-2014

REVISIONS							
NO.	BY:	DATE:	NO.	BY:	DATE:	SHEET NO. S-39
1			3			TOTAL SHEETS 266
2			4			

DESIGN ENGINEER OF RECORD: S. T. CHAMPION DATE: 5-13-13
DRAWN BY: D. A. GLADDEN DATE: 10-4-10
CHECKED BY: H. T. BARBOUR DATE: 1-5-12

05-MAR-2014 12:21
R:\Structures\Plans\Bailey\STRland2\dgladden\Microstation\R2707B_SD_STR2.dgn
bklappenbach

STR. #2

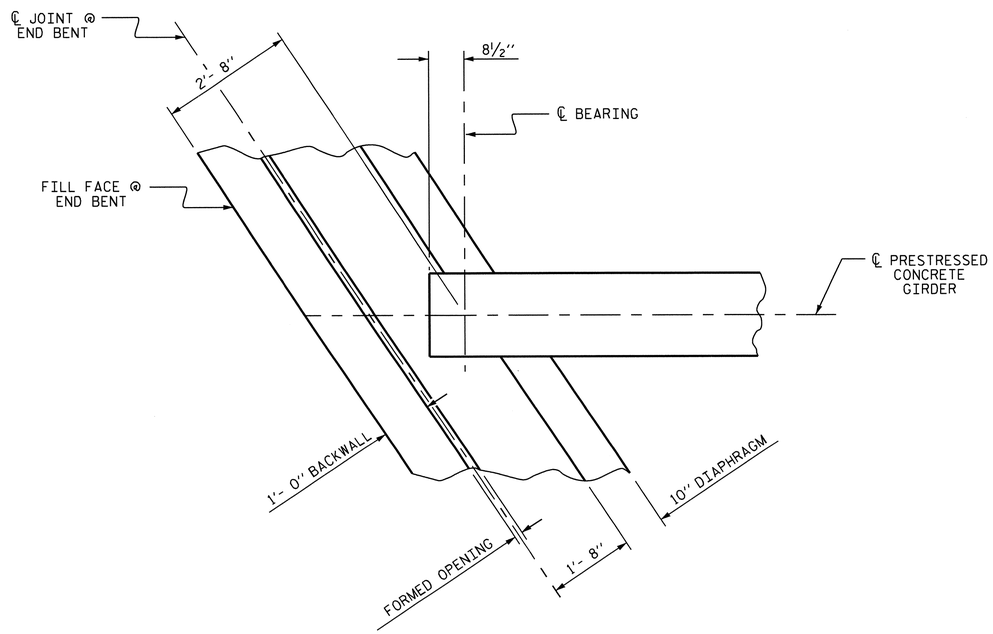

PLAN OF END BENT DIAPHRAGM

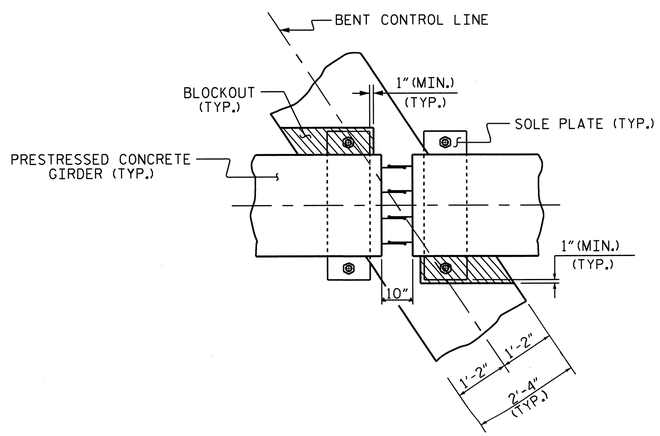

PLAN VIEW

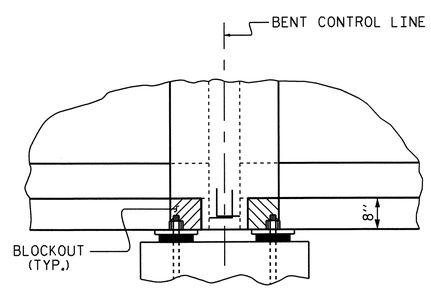

SECTION A-A

BENT DIAPHRAGM BLOCKOUT DETAIL

(PRESTRESSED GIRDERS WITH CONTINUOUS DECK SLAB)

NOTES

PROVIDE 1¼" HIGH BEAM BOLSTERS UPPER AT 4'-0" CTS. ATOP THE METAL STAY-IN-PLACE FORMS TO SUPPORT THE BOTTOM MAT OF 'A' BARS. WHEN USING REMOVABLE FORMS, PROVIDE CONTINUOUS HIGH CHAIRS FOR METAL DECK (C.H.C.M.) @ 4'-0" CTS. WITH A HEIGHT TO SUPPORT THE BOTTOM MAT OF 'A' BARS A CLEAR DISTANCE OF 2½" ABOVE THE TOP OF THE REMOVABLE FORM.

LONGITUDINAL STEEL MAY BE SHIFTED SLIGHTLY, AS NECESSARY, TO AVOID INTERFERENCE WITH STIRRUPS IN PRESTRESSED CONCRETE GIRDERS.

PREVIOUSLY CAST CONCRETE IN A CONTINUOUS UNIT SHALL HAVE ATTAINED A MINIMUM COMPRESSIVE STRENGTH OF 3,000 PSI BEFORE ADDITIONAL CONCRETE IS CAST IN THE UNIT.

BARRIER RAIL IN A CONTINUOUS UNIT SHALL NOT BE CAST UNTIL ALL SLAB CONCRETE IN THE UNIT HAS BEEN CAST AND HAS REACHED A MINIMUM COMPRESSIVE STRENGTH OF 3,000 PSI.

PROJECT NO. R-2707B
CLEVELAND COUNTY
STATION: 247+90.66 -L-

SHEET 3 OF 3

STATE OF NORTH CAROLINA
DEPARTMENT OF TRANSPORTATION
RALEIGH

SUPERSTRUCTURE
TYPICAL SECTION
(RIGHT LANE)

NORTH CAROLINA PROFESSIONAL SEAL 15826 ENGINEER BRUCE D. KLAPPENBACH
6-21-2013

REVISIONS						SHEET NO.
NO.	BY:	DATE:	NO.	BY:	DATE:	S-40
1			3			TOTAL SHEETS
2			4			266

STR. #2

DESIGN ENGINEER OF RECORD: S. T. CHAMPION	DATE : 5-13-13	
DRAWN BY : D. A. GLADDEN	DATE : 10-4-10	
CHECKED BY : H. T. BARBOUR	DATE : 1-5-12	

24-JUN-2013 12:43
R:\Structures\Plans\Bailey\STRIand2\dgladden\Microstation\R2707B_SD_STR2.dgn
dgladden

163'- 0" (FILL FACE @ END BENT #1 TO FILL FACE @ END BENT #2)

76'- 3" (FILL FACE @ END BENT #1 TO BENT #1 CONTROL LINE)

35'- 1"

#5 A101 THRU #5 A126 @ 5½" CTS. (3 BARS/MARK) (TOP OF SLAB)

#5 A201 THRU #5 A226 @ 5½" CTS. (3 BARS/MARK) (BOTT. OF SLAB)

267- #5 A1 @ 5½" CTS. (TOP OF SLAB)

267- #5 A2 @ 5½" CTS. (BOTT. OF SLAB)

23'- 0" TO ℄ -L-

1'- 7½"

1½"

4'- 0"

49'- 3" (OUT TO OUT)

42'- 0"

5½"

9½"

5¼"

#4 B1

#6 B4

BENT #1 CONTROL LINE

#6 B3

W.P. #1

W.P. #2

DETAIL A

FILL FACE @ END BENT #1

52°34'31"

#8 K2 OVER EA. INT. GDR.

6'- 3⅜"

GDR. A1

GDR. A2

CONTROL LINE RIGHT LANE

TRANSVERSE CONST. JT.

#5 G1 (2 BAR RUN) (2'-6" MIN. SPLICE)

℄ JOINT @ END BENT #1

10" END BENT DIAPHRAGM (TYP.)

9- #4 "U" @ 1'- 0" CTS. (TYP. EA. BAY) (SEE TYPICAL SECTION)

GDR. A3

2'- 4" BENT DIAPHRAGM (TYP.)

8" (TYP.)

10- #4 S1 @ 1'- 0" CTS. (TYP. EA. BAY)

#6 K3 (TYP. EA. BAY)

10- #4 S2 @ 1'- 0" CTS. (TYP. EA. BAY)

57- #4 J1 @ 1'- 0" CTS.

55'- 8 13/16"

45- #4 B1 @ 1'- 1" CTS. (TOP OF SLAB) (2 BAR RUNS) (2'- 0" MIN. SPLICE)

11- #6 B5 @ 11" CTS. (BOTT. OF SLAB) (3 BAR RUNS) (2'- 7" MIN. SPLICE) (TYP. EA. BAY)

#4 "K" BARS (TYP. EA. BAY) (SEE TYPICAL SECTION)

34- #4 S3 @ 1'- 0" CTS. (TYP. EA. BAY) (SEE TYPICAL SECTION)

GDR. A4

TRANSVERSE CONST. JT.

#8 K1 OVER EA. EXT. GDR.

8" (TYP.)

45- #6 B3 @ 1'- 1" CTS. (TOP OF SLAB)

44- #6 B4 @ 1'- 1" CTS. (TOP OF SLAB)

5- #4 K9 BETWEEN EA. INT. GIRDERS (SEE TYPICAL SECTION)

5- #4 K8 BETWEEN EA. EXT. GIRDERS (SEE TYPICAL SECTION)

GDR. A5

1'- 7½"

1½"

9½"

5¼"

#4 B1

4- #6 B5 @ 11" CTS. (BOTT. OF OVERHANG) (3 BAR RUNS) (2'- 7" MIN. SPLICE) (TYP. EA. SIDE)

2½" (TYP.)

2'- 0" MIN. SPLICE

5¼" (TYP.)

9½" (TYP.)

1'-4" (TYP.)

#6 B4

#6 B3

11'- 3" (TYP.)

12'-10" (TYP.)

27'- 6" (TYP.)

30'- 9" (TYP.)

2'- 0" MIN. SPLICE

PLAN OF SPAN A

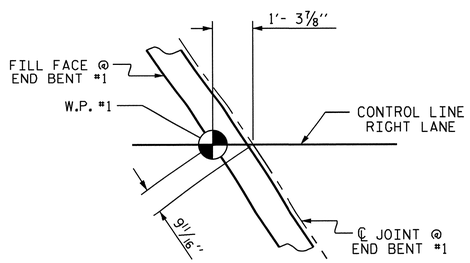

DETAIL A

PROJECT NO. R-2707B

CLEVELAND COUNTY

STATION: 247+90.66 -L-

SHEET 1 OF 2

STATE OF NORTH CAROLINA
DEPARTMENT OF TRANSPORTATION
RALEIGH

SUPERSTRUSTURE PLAN OF SPAN A (RIGHT LANE)

NORTH CAROLINA PROFESSIONAL SEAL 15825 ENGINEER BRUCE D. KLAPPENBACH 6-17-2013

REVISIONS						SHEET NO.
NO.	BY:	DATE:	NO.	BY:	DATE:	S-41
1			3			TOTAL SHEETS
2			4			266

DESIGN ENGINEER OF RECORD: S. T. CHAMPION DATE: 5-13-13

DRAWN BY: D. A. GLADDEN DATE: 10-11-10

CHECKED BY: H. T. BARBOUR DATE: 1-5-12

24-JUN-2013 12:43
R:\Structures\Plans\Bailey\STRland2\dgladden\Microstation\R2707B_SD_STR2.dgn
dgladden

STR. #2

NC005

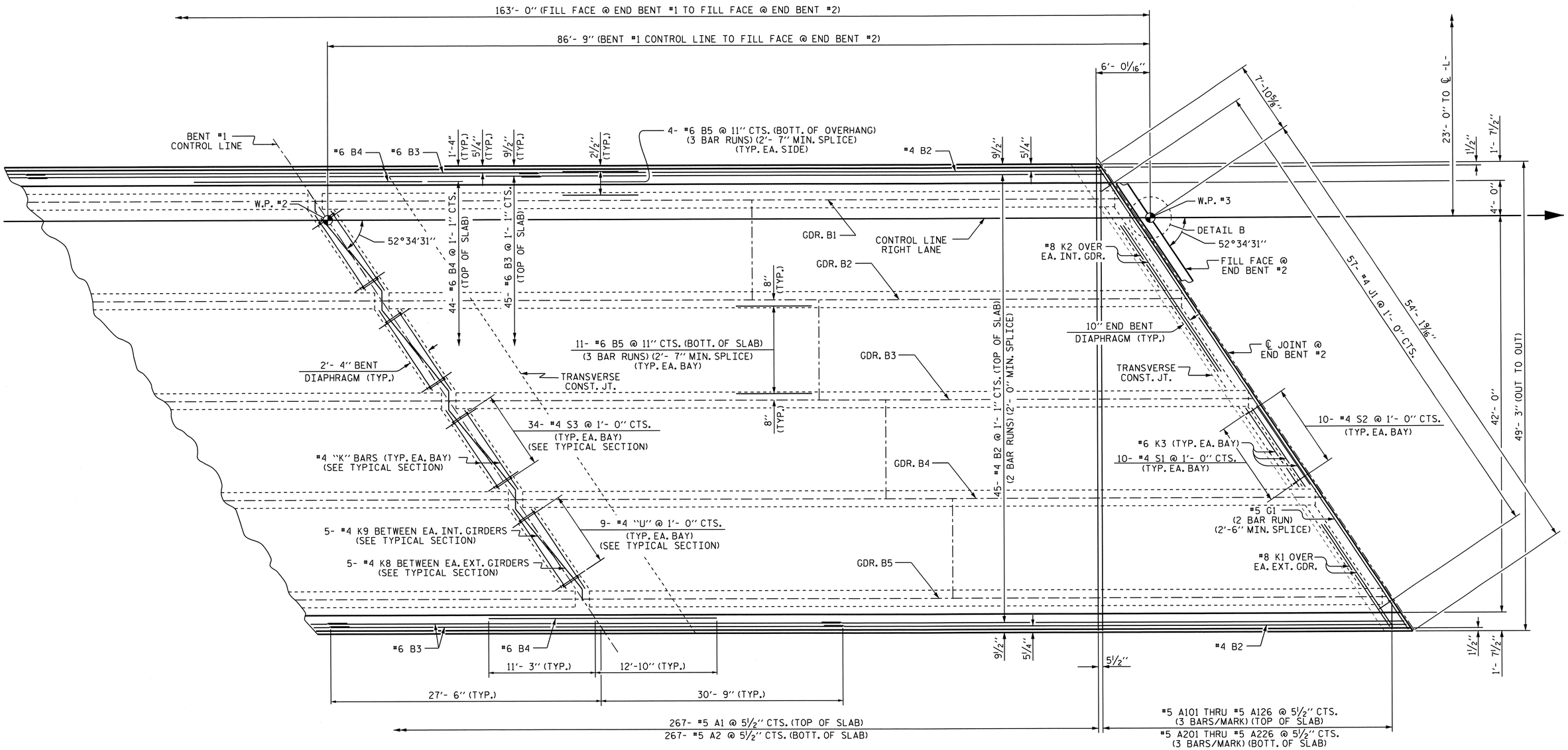

PLAN OF SPAN B

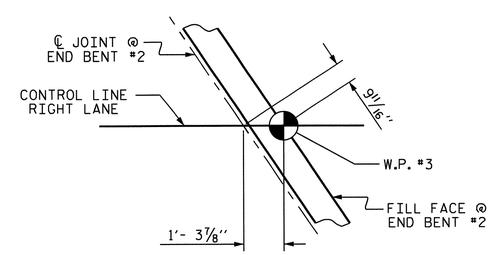

DETAIL B

PROJECT NO. R-2707B
CLEVELAND COUNTY
STATION: 247+90.66 -L-

SHEET 2 OF 2

STATE OF NORTH CAROLINA
DEPARTMENT OF TRANSPORTATION
RALEIGH

SUPERSTRUSTURE PLAN OF SPAN B (RIGHT LANE)

NORTH CAROLINA PROFESSIONAL SEAL 15835 ENGINEER BRIAN D. KLAPPENBACH
V-27-2013

REVISIONS							SHEET NO.
NO.	BY:	DATE:	NO.	BY:	DATE:		S-42
1			3				TOTAL SHEETS
2			4				266

DESIGN ENGINEER OF RECORD: S. T. CHAMPION DATE: 5-13-13
DRAWN BY: D. A. GLADDEN DATE: 10-11-10
CHECKED BY: H. T. BARBOUR DATE: 1-5-12

24-JUN-2013 12:43
R:\Structures\Plans\Bailey\STRland2\dgladden\Microstation\R2707B_SD_STR2.dgn
dgladden

STR. #2 NCDOT

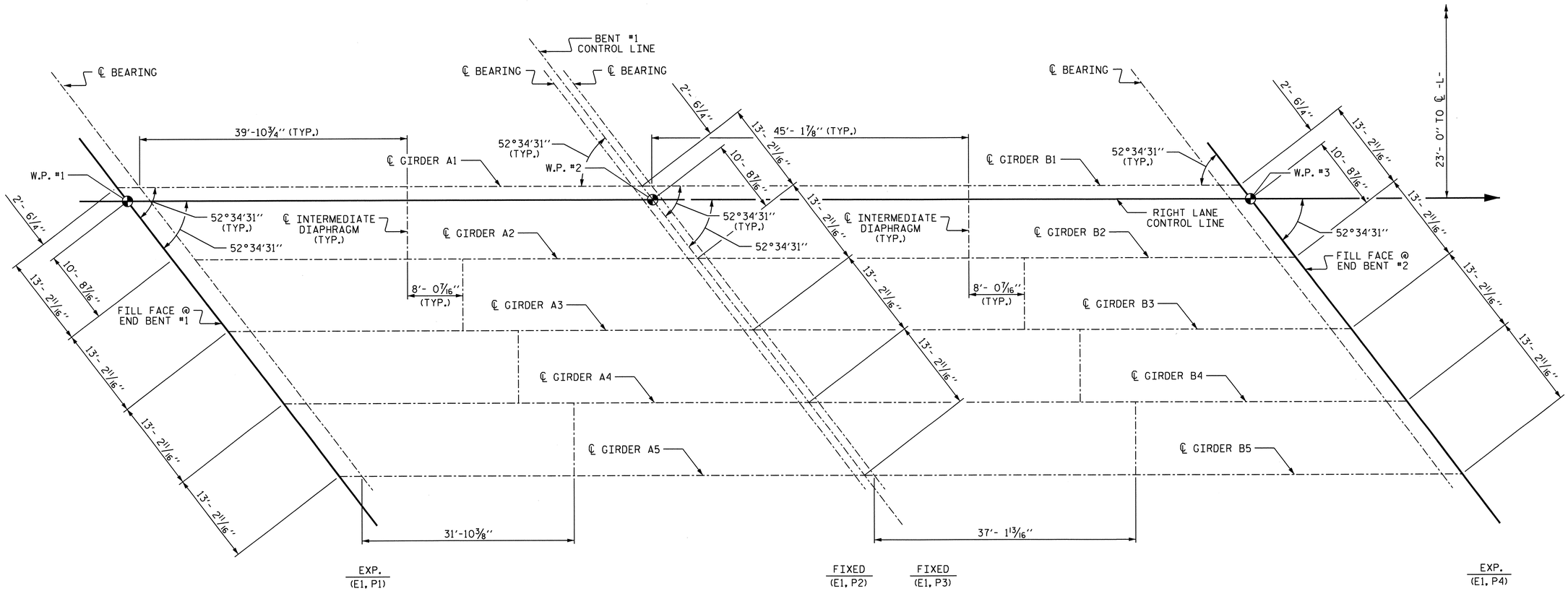

FRAMING PLAN

PROJECT NO. R-2707B
CLEVELAND COUNTY
STATION: 247+90.66 -L-

STATE OF NORTH CAROLINA
DEPARTMENT OF TRANSPORTATION
RALEIGH

SUPERSTRUCTURE FRAMING PLAN (RIGHT LANE)

NORTH CAROLINA PROFESSIONAL SEAL 15825 ENGINEER D. KLAPPENBACH
6-27-2013

REVISIONS						SHEET NO.
NO.	BY:	DATE:	NO.	BY:	DATE:	S-43
1			3			TOTAL SHEETS
2			4			266

DESIGN ENGINEER OF RECORD: S. T. CHAMPION DATE : 5-13-13
DRAWN BY : D. A. GLADDEN DATE : 10-18-10
CHECKED BY : H. T. BARBOUR DATE : 1-5-12

14-MAY-2013 10:33
R:\Structures\Plans\Bolley\STRlond2\dgladden\Microstation\R2707B_SD_STR2.dgn
dgladden

STR. #2 NC005

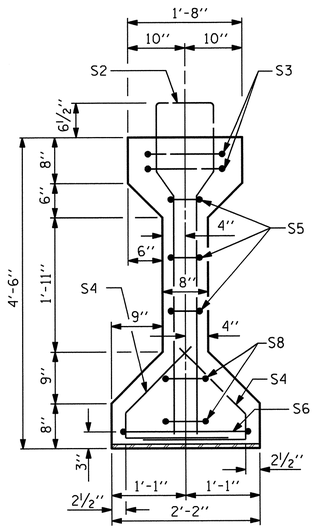

SECTION A-A

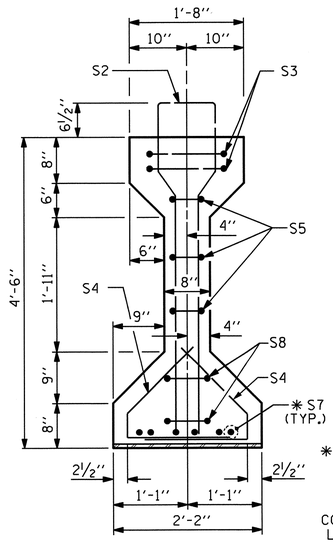

SECTION B-B

✱ FOR S7 BARS, SEE DETAIL "A" OF PRESTRESSED CONCRETE GIRDER CONTINUOUS FOR LIVE LOAD DETAILS SHEET

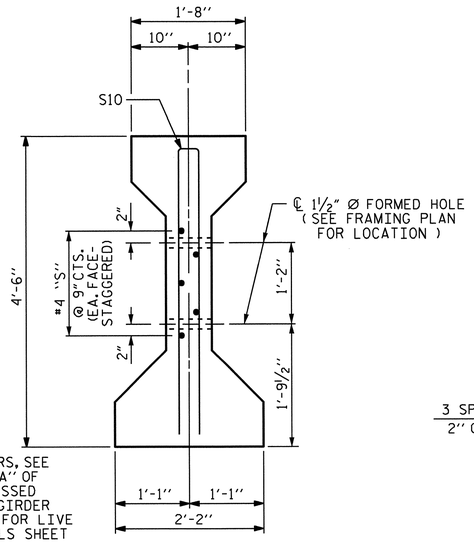

SECTION C-C

(S1 BARS NOT SHOWN)

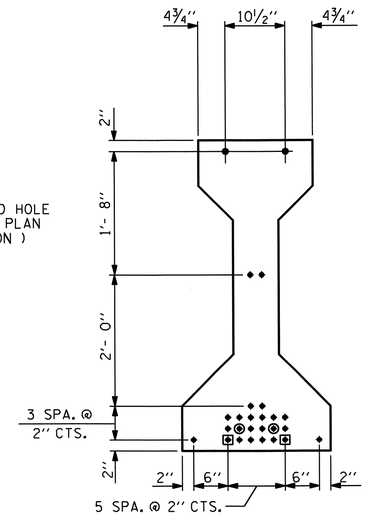

AT END OF GIRDER

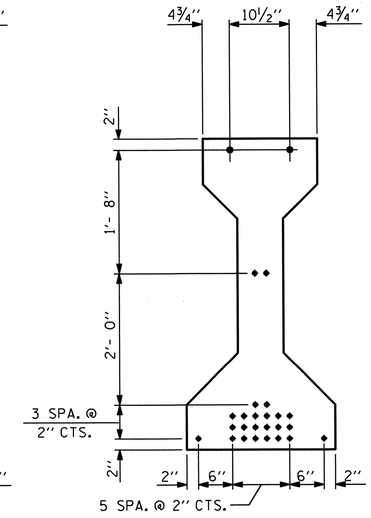

AT ℄ OF GIRDER

0.6" Ø LOW RELAXATION STRAND LAYOUT

⊡ STRANDS DEBONDED FOR 12'- 0" FROM END OF GIRDER.
⊙ STRANDS DEBONDED FOR 10'- 0" FROM END OF GIRDER.

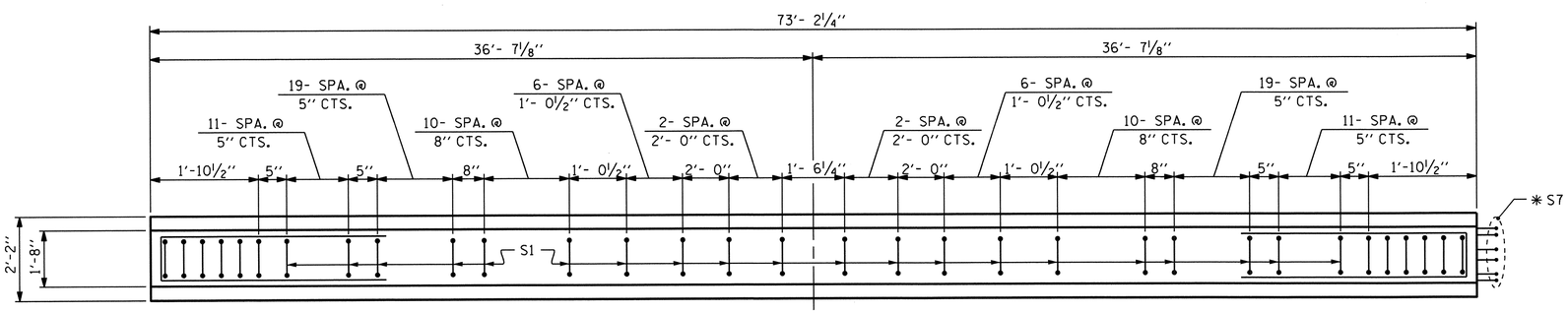

PLAN OF GIRDER

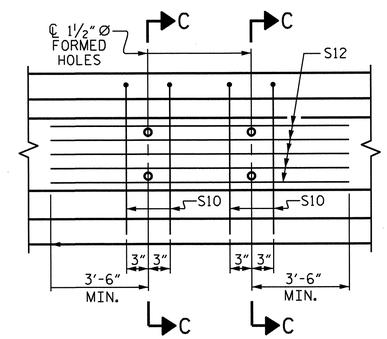

PARTIAL ELEVATION

SHOWING INTERMEDIATE DIAPHRAGM
REINFORCING STEEL FOR GIRDER Nos. 2, 3 & 4

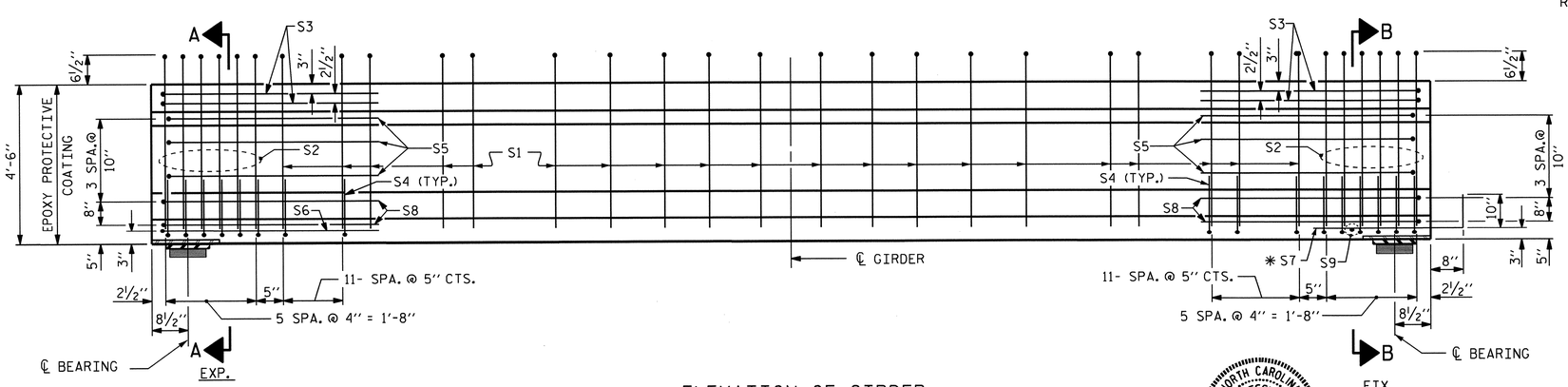

ELEVATION OF GIRDER

(SEE PARTIAL ELEVATION FOR ADDITIONAL "S" BARS)

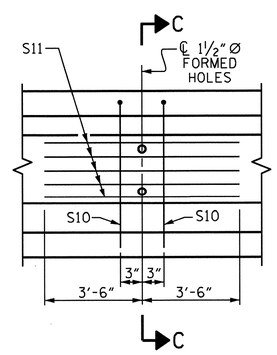

PARTIAL ELEVATION

SHOWING INTERMEDIATE DIAPHRAGM
REINFORCING STEEL FOR GIRDER Nos. 1 & 5

0.6" Ø L. R. GRADE 270 STRANDS

AREA (SQUARE INCHES)	ULTIMATE STRENGTH (LBS. PER STRAND)	APPLIED PRESTRESS (LBS. PER STRAND)
0.217	58,600	43,950

REINFORCING STEEL FOR ONE GIRDER

	BAR	NUMBER	SIZE	TYPE	LENGTH	WEIGHT
	S1	106	#4	1	10'-9"	761
	S2	12	#6	1	10'-9"	194
	S3	4	#4	2	9'-1"	24
	S4	72	#4	3	3'-5"	164
	S5	6	#4	2	8'-5"	34
	S6	1	#4	2	9'-11"	7
	✱ S7	6	#5	STR	3'-8"	23
	S8	4	#4	2	8'-7"	23
	S9	1	#3	STR	1'-10"	1
EXTERIOR GDR.	S10	2	#5	2	8'-8"	18
INTERIOR GDR.	S10	4	#5	2	8'-8"	36
EXTERIOR GDR.	S11	5	#4	STR	7'-0"	23
INTERIOR GDR.	S12	5	#4	STR	15'-1"	50

✱ NOTE: S7 BARS SHALL BE BENT BEFORE SHIPMENT. HEAT BENDING SHALL NOT BE ALLOWED.

BAR TYPES

ALL BAR DIMENSIONS ARE OUT-TO-OUT

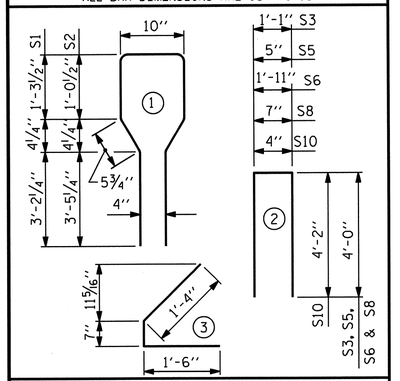

QUANTITIES FOR ONE GIRDER

	REINFORCING STEEL LB.	5000 PSI CONCRETE C.Y.	0.6" Ø L. R. STRANDS No.
EXT. GDR.	1272	14.9	26
INT. GDR.	1317	14.9	26

GIRDERS REQUIRED

NUMBER	LENGTH	TOTAL LENGTH
5	73'- 2¼"	365'-11¼"

PROJECT NO. R-2707B

CLEVELAND COUNTY

STATION: 247+90.66 -L-

STATE OF NORTH CAROLINA
DEPARTMENT OF TRANSPORTATION
RALEIGH

AASHTO TYPE IV
PRESTRESSED CONCRETE GIRDER
CONTINUOUS FOR LIVE LOAD
(SPAN A)
(RIGHT LANE)

DESIGN ENGINEER OF RECORD: S. T. CHAMPION	DATE : 5-13-13
ASSEMBLED BY : D. A. GLADDEN	DATE : 10-25-10
CHECKED BY : H. T. BARBOUR	DATE : 1-5-12
DRAWN BY : ELR 8/91	REV. 7/17/98 RWW/LES
CHECKED BY : GRP 8/91	REV. 10/17/00R RWW/LES
	REV. 5/1/06R TLA/GM

REVISIONS

NO.	BY:	DATE:	NO.	BY:	DATE:
1			3		
2			4		

SHEET NO. S-44

TOTAL SHEETS 266

NORTH CAROLINA PROFESSIONAL SEAL 15825 ENGINEER BRIGHT D. KLAPPENBACH
6-27-2013

27-JUN-2013 10:16
R:\Structures\Plans\Bailey\STRland2\dgladden\Microstation\R2707B_SD_STR2.dgn
bklappenbach

STR. #2

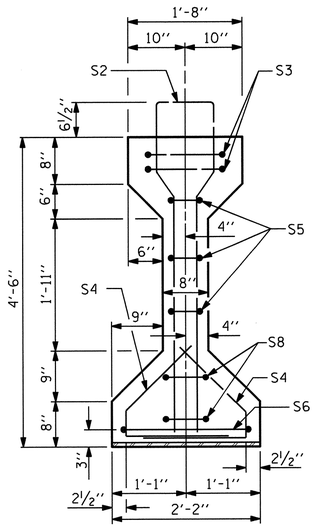

SECTION A-A

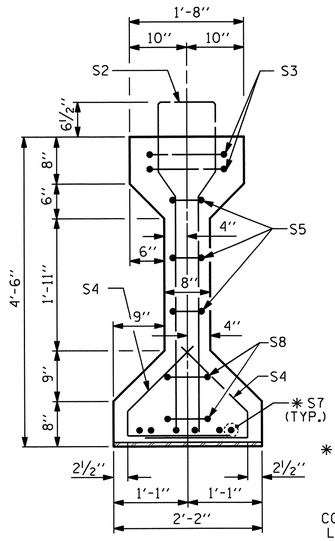

SECTION B-B

✱ FOR S7 BARS, SEE DETAIL "A" OF PRESTRESSED CONCRETE GIRDER CONTINUOUS FOR LIVE LOAD DETAILS SHEET

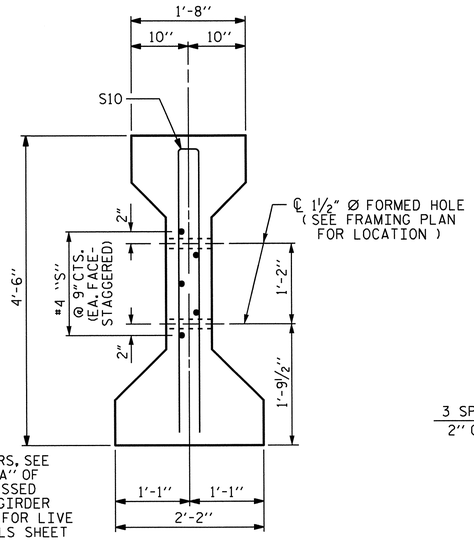

SECTION C-C

(S1 BARS NOT SHOWN)

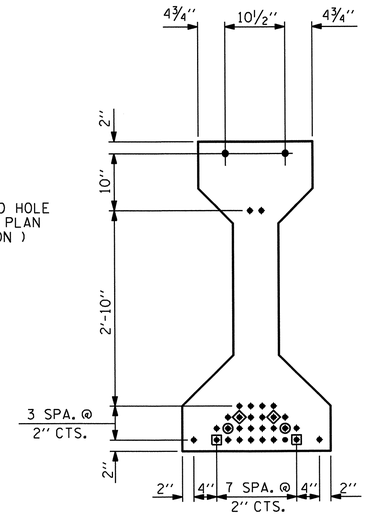

AT END OF GIRDER

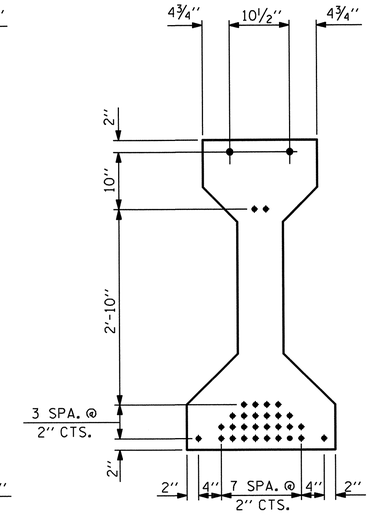

AT ℄ OF GIRDER

0.6" Ø LOW RELAXATION STRAND LAYOUT

- ⊡ STRANDS DEBONDED FOR 12'- 0" FROM END OF GIRDER.
- ⊙ STRANDS DEBONDED FOR 10'- 0" FROM END OF GIRDER.
- ◈ STRANDS DEBONDED FOR 8'- 0" FROM END OF GIRDER.

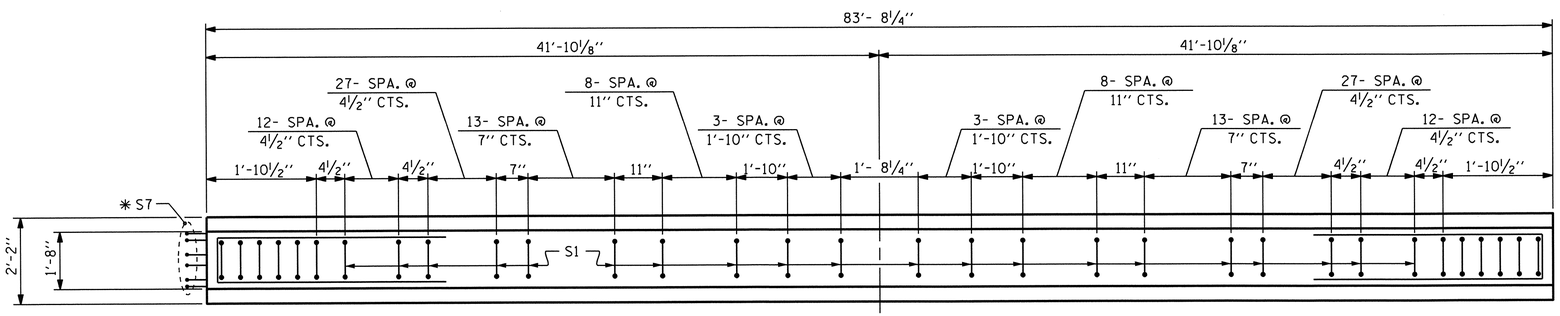

PLAN OF GIRDER

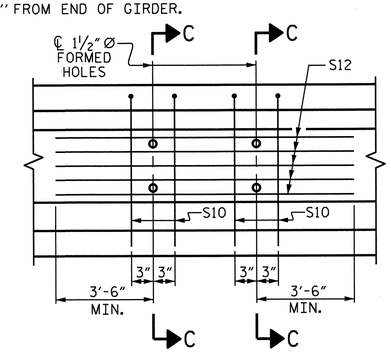

PARTIAL ELEVATION

SHOWING INTERMEDIATE DIAPHRAGM REINFORCING STEEL FOR GIRDER Nos. 2, 3 & 4

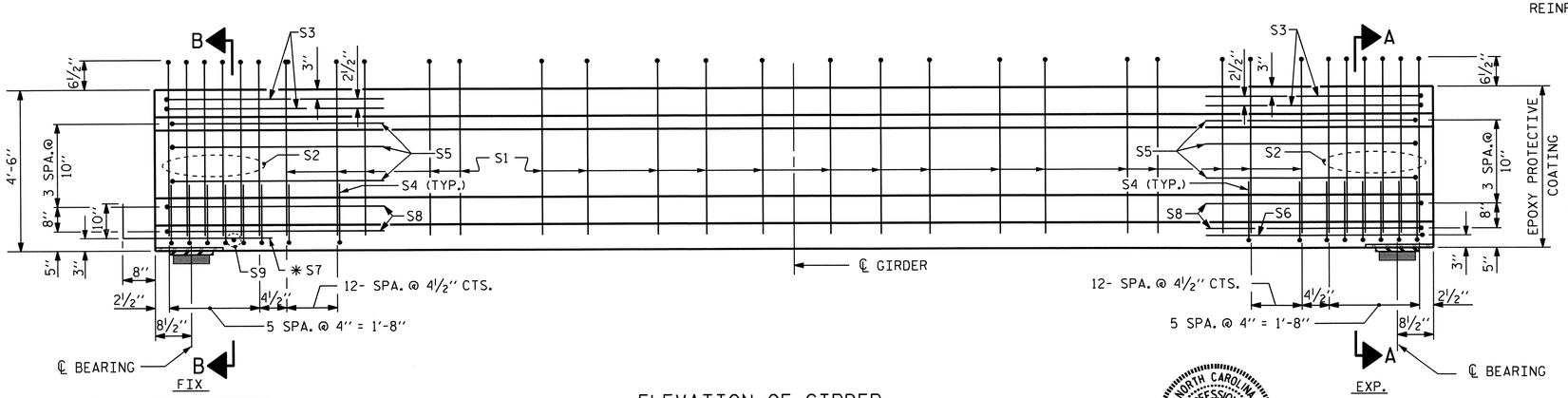

ELEVATION OF GIRDER

(SEE PARTIAL ELEVATION FOR ADDITIONAL "S" BARS)

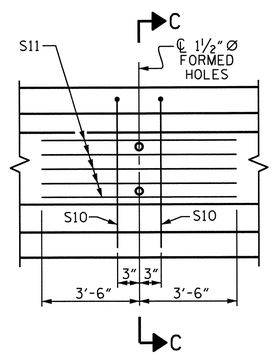

PARTIAL ELEVATION

SHOWING INTERMEDIATE DIAPHRAGM REINFORCING STEEL FOR GIRDER Nos. 1 & 5

0.6" Ø L. R. GRADE 270 STRANDS

AREA (SQUARE INCHES)	ULTIMATE STRENGTH (LBS. PER STRAND)	APPLIED PRESTRESS (LBS. PER STRAND)
0.217	58,600	43,950

REINFORCING STEEL FOR ONE GIRDER

	BAR	NUMBER	SIZE	TYPE	LENGTH	WEIGHT
	S1	136	#4	1	10'-9"	977
	S2	12	#6	1	10'-9"	194
	S3	4	#4	2	9'-1"	24
	S4	76	#4	3	3'-5"	173
	S5	6	#4	2	8'-5"	34
	S6	1	#4	2	9'-11"	7
	✱ S7	6	#5	STR	3'-8"	23
	S8	4	#4	2	8'-7"	23
	S9	1	#3	STR	1'-10"	1
EXTERIOR GDR.	S10	2	#5	2	8'-8"	18
INTERIOR GDR.	S10	4	#5	2	8'-8"	36
EXTERIOR GDR.	S11	5	#4	STR	7'-0"	23
INTERIOR GDR.	S12	5	#4	STR	15'-1"	50

✱ NOTE: S7 BARS SHALL BE BENT BEFORE SHIPMENT. HEAT BENDING SHALL NOT BE ALLOWED.

BAR TYPES

ALL BAR DIMENSIONS ARE OUT-TO-OUT

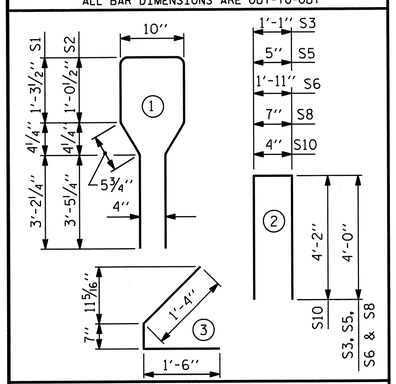

QUANTITIES FOR ONE GIRDER

	REINFORCING STEEL LB.	6000 PSI CONCRETE C.Y.	0.6" Ø L.R. STRANDS No.
EXT. GDR.	1497	17.0	32
INT. GDR.	1542	17.0	32

GIRDERS REQUIRED

NUMBER	LENGTH	TOTAL LENGTH
5	83'- 8¼"	418'- 5¼"

PROJECT NO. R-2707B

CLEVELAND COUNTY

STATION: 247+90.66 -L-

STATE OF NORTH CAROLINA
DEPARTMENT OF TRANSPORTATION
RALEIGH

STANDARD
AASHTO TYPE IV
PRESTRESSED CONCRETE GIRDER
CONTINUOUS FOR LIVE LOAD
(SPAN B)
(RIGHT LANE)

REVISIONS						SHEET NO.
NO.	BY:	DATE:	NO.	BY:	DATE:	S-45
1			3			TOTAL SHEETS
2			4			266

DESIGN ENGINEER OF RECORD: S. T. CHAMPION	DATE : 5-13-13		
ASSEMBLED BY : D. A. GLADDEN	DATE : 10-25-10		
CHECKED BY : H. T. BARBOUR	DATE : 1-5-12		
DRAWN BY : ELR 8/91	REV. 7/17/98	RWW/LES	
CHECKED BY : GRP 8/91	REV. 10/17/00R	RWW/LES	
	REV. 5/1/06R	TLA/GM	

NORTH CAROLINA PROFESSIONAL SEAL 15825 ENGINEER BRUCE D. KLAPPENBACH 6-27-2013

27-JUN-2013 10:16
R:\Structures\Plans\Bailey\STRland2\dgladden\Microstation\R2707B_SD_STR2.dgn
bklappenbach

STR. #2

STD. NO. PCG6

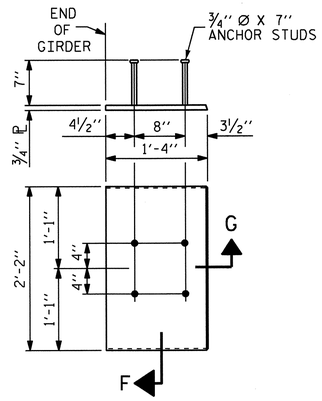

EMBEDDED PLATE "B-1" DETAILS FOR AASHTO TYPE IV GIRDER

(2 REQ'D PER GIRDER)

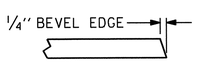

SECTION "G"

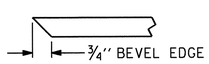

SECTION "F"

(SEE NOTES)

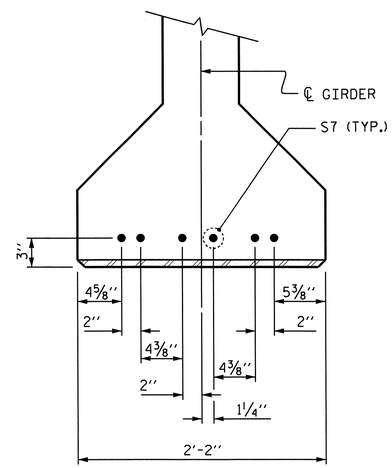

DETAIL "A"

(FOR AASHTO TYPE IV GIRDERS)

NOTES

ALL PRESTRESSING STRANDS SHALL BE 7-WIRE LOW-RELAXATION GRADE 270 STRANDS AND SHALL CONFORM TO AASHTO M203 EXCEPT FOR SAMPLING REQUIREMENTS WHICH SHALL BE IN ACCORDANCE WITH THE STANDARD SPECIFICATIONS.

ALL REINFORCING STEEL SHALL BE GRADE 60.

APPLY EPOXY PROTECTIVE COATING TO END OF GIRDER SURFACES INDICATED IN ELEVATION VIEW.

EMBEDDED PLATE "B-1" SHALL BE GALVANIZED IN ACCORDANCE WITH THE STANDARD SPECIFICATIONS. BEVEL EDGES OF PLATE "B-1" TO GIVE CLOSE FIT BUT NOT TIGHT FIT TO STEEL CASTING FORM.

ANCHOR STUDS SHALL CONFORM TO AASHTO M169 GRADES 1010 THROUGH 1020 OR APPROVED EQUAL, AND SHALL MEET THE TYPE "B" REQUIREMENTS OF SUBSECTION 7.3 OF THE ANSI/AASHTO/AWS D1.5 BRIDGE WELDING CODE.

AT ENDS OF GIRDERS TO BE EMBEDDED IN CONCRETE DIAPHRAGMS OR END WALLS, PRESTRESSING STRANDS MAY EXTEND A MAXIMUM OF 2" BEYOND THE GIRDER ENDS. OTHERWISE, PRESTRESSING STRANDS SHALL BE CUT FLUSH WITH THE GIRDER ENDS.

THE TRANSFER OF LOAD FROM THE ANCHORAGES TO THE GIRDER IN SPAN A SHALL BE DONE WHEN CONCRETE HAS REACHED A COMPRESSIVE STRENGTH OF NOT LESS THAN 4000 PSI.

THE TRANSFER OF LOAD FROM THE ANCHORAGES TO THE GIRDER IN SPAN B SHALL BE DONE WHEN CONCRETE HAS REACHED A COMPRESSIVE STRENGTH OF NOT LESS THAN 5100 PSI.

DEPENDING ON THE TYPE OF SYSTEM USED TO SUPPORT THE DECK SLAB FORMS, PRESET ANCHORS MAY BE NECESSARY IN THE PRESTRESSED CONCRETE GIRDER.

THE TOP SURFACE OF THE GIRDER, EXCLUDING THE OUTSIDE 4", SHALL BE RAKED TO A DEPTH OF 1/4".

THE CONTRACTOR HAS THE OPTION TO PROVIDE, AT NO ADDITIONAL COST TO THE DEPARTMENT, 2 ADDITIONAL STRANDS AT THE TOP OF THE GIRDER TO FACILITATE TYING OF THE REINFORCING STEEL. THESE STRANDS SHALL BE PULLED TO A LOAD OF 4500 lbs.

PROJECT NO. R-2707B
CLEVELAND COUNTY
STATION: 247+90.66 -L-

STATE OF NORTH CAROLINA
DEPARTMENT OF TRANSPORTATION
RALEIGH

STANDARD

PRESTRESSED CONCRETE GIRDER CONTINUOUS FOR LIVE LOAD DETAILS (RIGHT LANE)

NORTH CAROLINA PROFESSIONAL SEAL 15825 ENGINEER BRUCE D. KLAPPENBACH
6-27-2013

REVISIONS						SHEET NO.
NO.	BY:	DATE:	NO.	BY:	DATE:	S-46
1			3			TOTAL SHEETS
2			4			266

DESIGN ENGINEER OF RECORD: S. T. CHAMPION DATE : 5-13-13
ASSEMBLED BY : D. A. GLADDEN DATE : 10-25-10
CHECKED BY : H. T. BARBOUR DATE : 1-5-12
DRAWN BY : ELR 11/91
CHECKED BY : GRP 11/91
REV. 10/17/00 RWW/LES
REV. 7/10/01RR LES/RDR
REV. 5/1/06 TLA/GM

STR. #2

STD. NO. PCG9

14-MAY-2013 10:34
R:\Structures\Plans\Bailey\STR1and2\dgladden\Microstation\R2707B_SD_STR2.dgn
dgladden

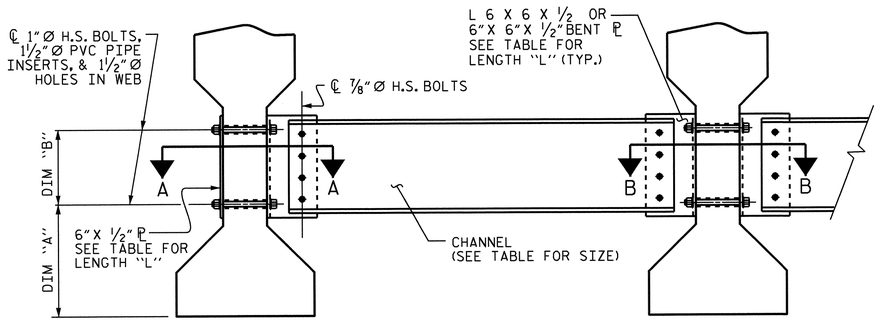

PART SECTION AT INTERMEDIATE DIAPHRAGM

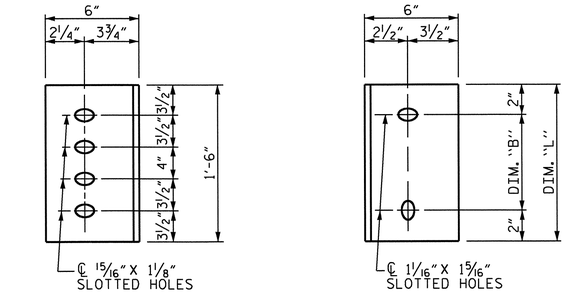

DIAPHRAGM FACE

WEB FACE

CONNECTOR PLATE DETAILS

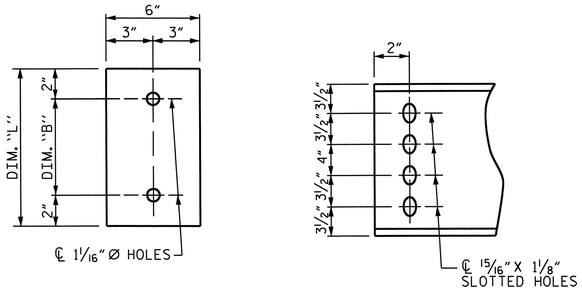

PLATE DETAILS

CHANNEL END

STRUCTURAL STEEL NOTES

ALL INTERMEDIATE DIAPHRAGM STEEL AND CONNECTOR PLATES SHALL BE AASHTO M270 GRADE 50 OR APPROVED EQUAL.

TENSION ON THE ASTM A325 BOLTS THROUGH THE CHANNEL MEMBER SHALL BE CALIBRATED USING DIRECT TENSION INDICATOR WASHERS IN ACCORDANCE WITH THE STANDARD SPECIFICATIONS.

TENSION ON THE ASTM A449 BOLTS THROUGH THE GIRDER WEB SHALL BE SNUG TIGHTENED FOLLOWED BY AN ADDITIONAL ¼ TURN.

THE PLATES, BENT PLATES, CHANNELS, AND ANGLES SHALL BE GALVANIZED OR METALLIZED IN ACCORDANCE WITH THE STANDARD SPECIFICATIONS. FOR THERMAL SPRAYED COATINGS (METALLIZATION), SEE SPECIAL PROVISIONS.

FOR METALLIZATION, APPLY AN 8 MIL THICK 99.99 PERCENT ZINC (W-Zn-1) THERMAL SPRAYED COATING WITH A 0.5 MIL THICK SEAL COAT TO ALL STEEL DIAPHRAGM SURFACES IN ACCORDANCE WITH THE THERMAL SPRAYED COATINGS SPECIAL PROVISION AND SECTION 442 OF THE STANDARD SPECIFICATIONS.

GALVANIZE THE HIGH STRENGTH BOLTS, NUTS, WASHERS AND DIRECT TENSION INDICATORS IN ACCORDANCE WITH THE STANDARD SPECIFICATIONS.

USE AN ASTM F436 HARDENED WASHER WITH STANDARD AND SLOTTED HOLES UNDER EACH BOLT HEAD AND NUT.

FOR BOLTS THROUGH THE GIRDER WEB, PROVIDE SUFFICIENT LENGTH OF THREADS ON ALL BOLTS TO ACCOMMODATE WASHERS AND THE THICKNESS OF CONNECTING MEMBER PLUS AT LEAST ¼" PROJECTION BEYOND THE NUT.

INTERMEDIATE DIAPHRAGM ASSEMBLY SHALL COMPLY WITH SECTION 1072 OF THE STANDARD SPECIFICATIONS.

SUBMIT TWO SETS OF WORKING DRAWINGS FOR THE INTERMEDIATE DIAPHRAGM ASSEMBLY FOR REVIEW, COMMENTS AND ACCEPTANCE. AFTER REVIEW, COMMENTS, AND ACCEPTANCE, SUBMIT SEVEN SETS FOR DISTRIBUTION.

IN THE EXTERIOR BAYS, PLACE TEMPORARY STRUTS BETWEEN PRESTRESSED GIRDERS ADJACENT TO THE STEEL DIAPHRAGMS. STRUTS SHALL REMAIN IN PLACE 3 DAYS AFTER CONCRETE IS PLACED.

THE COST OF THE STEEL DIAPHRAGMS AND ASSEMBLIES SHALL BE INCLUDED IN THE UNIT PRICE BID FOR PRESTRESSED CONCRETE GIRDERS.

TABLE

GIRDER TYPE	CHANNEL SIZE	DIM "A"	DIM "B"	DIM "L"
IV	MC 18 x 42.7	1'-9½"	1'-2"	1'-6"

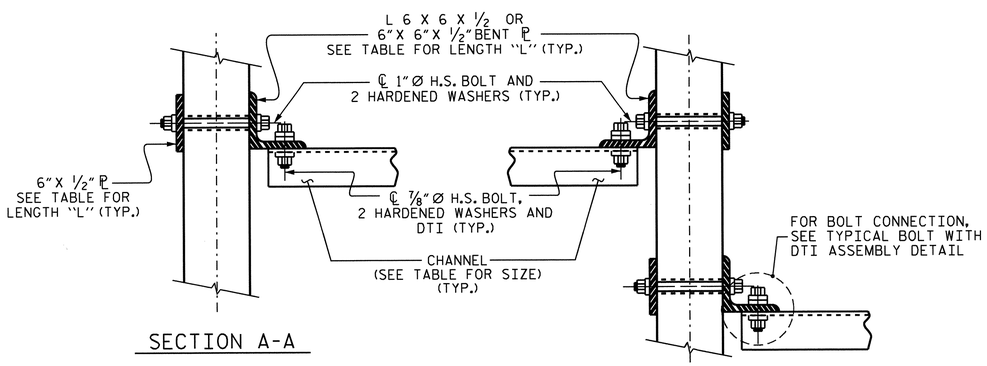

SECTION A-A

SECTION B-B

CONNECTION DETAILS

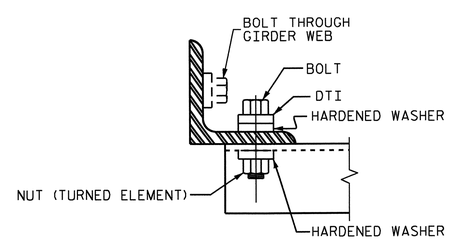

BOLT WITH DTI ASSEMBLY DETAIL

PROJECT NO. R-2707B

CLEVELAND COUNTY

STATION: 247+90.66 -L-

STATE OF NORTH CAROLINA
DEPARTMENT OF TRANSPORTATION
RALEIGH

STANDARD

INTERMEDIATE STEEL DIAPHRAGMS FOR TYPE II, III, & IV PRESTRESSED CONCRETE GIRDERS

NORTH CAROLINA PROFESSIONAL SEAL 15825 ENGINEER BRUCE D. KLAPPENBACH 6-27-2013

REVISIONS						SHEET NO.
NO.	BY:	DATE:	NO.	BY:	DATE:	S-47
1			3			TOTAL SHEETS
2			4			266

STR. #2 STD. NO. PCG10

DESIGN ENGINEER OF RECORD: S. T. CHAMPION	DATE : 5-13-13
ASSEMBLED BY : D. A. GLADDEN	DATE : 10-25-10
CHECKED BY : H. T. BARBOUR	DATE : 1-5-12
DRAWN BY : TLA 6/05	ADDED 10/21/05 KMM/GM
CHECKED BY : VC 6/05	REV. 5/1/06RRR MAA/GM REV. 10/1/11

14-MAY-2013 10:34
R:\Structures\Plans\Bailey\STRland2\dgladden\Microstation\R2707B_SD_STR2.dgn
dgladden

DEAD LOAD DEFLECTION TABLE FOR GIRDERS

0.6"Ø LOW RELAXATION	SPAN "A"																																	
	GIRDER #1											GIRDER #2, #3 & #4											GIRDER #5										
TENTH POINTS	0	.1	.2	.3	.4	.5	.6	.7	.8	.9	0	0	.1	.2	.3	.4	.5	.6	.7	.8	.9	0	0	.1	.2	.3	.4	.5	.6	.7	.8	.9	0
CAMBER (GIRDER ALONE IN PLACE) ↑	0	0.052	0.098	0.134	0.157	0.165	0.157	0.134	0.098	0.052	0	0	0.052	0.098	0.134	0.157	0.165	0.157	0.134	0.098	0.052	0	0	0.052	0.098	0.134	0.157	0.165	0.157	0.134	0.098	0.052	0
✳ DEFLECTION DUE TO SUPERIMPOSED D.L. ↓	0	0.021	0.039	0.054	0.063	0.066	0.063	0.054	0.039	0.021	0	0	0.023	0.043	0.059	0.069	0.073	0.069	0.059	0.043	0.023	0	0	0.021	0.039	0.053	0.062	0.066	0.062	0.053	0.039	0.021	0
FINAL CAMBER ↑	0	3/8	11/16	15/16	1 1/8	1 3/16	1 1/8	15/16	11/16	3/8	0	0	3/8	11/16	7/8	1 1/16	1 1/8	1 1/16	7/8	11/16	3/8	0	0	3/8	11/16	1	1 1/8	1 3/16	1 1/8	1	11/16	3/8	0

✳ INCLUDES FUTURE WEARING SURFACE IN SUPERIMPOSED DEAD LOAD.
ALL VALUES ARE SHOWN IN FEET (DECIMAL FORM), EXCEPT "FINAL CAMBER", WHICH IS GIVEN IN INCHES (FRACTION FORM).

DEAD LOAD DEFLECTION TABLE FOR GIRDERS

0.6"Ø LOW RELAXATION	SPAN "B"																																	
	GIRDER #1											GIRDER #2, #3 & #4											GIRDER #5										
TENTH POINTS	0	.1	.2	.3	.4	.5	.6	.7	.8	.9	0	0	.1	.2	.3	.4	.5	.6	.7	.8	.9	0	0	.1	.2	.3	.4	.5	.6	.7	.8	.9	0
CAMBER (GIRDER ALONE IN PLACE) ↑	0	0.076	0.144	0.197	0.230	0.242	0.230	0.197	0.144	0.076	0	0	0.076	0.144	0.197	0.230	0.242	0.230	0.197	0.144	0.076	0	0	0.076	0.144	0.197	0.230	0.242	0.230	0.197	0.144	0.076	0
✳ DEFLECTION DUE TO SUPERIMPOSED D.L. ↓	0	0.033	0.062	0.085	0.099	0.104	0.099	0.085	0.062	0.033	0	0	0.036	0.068	0.093	0.109	0.115	0.109	0.093	0.068	0.036	0	0	0.033	0.062	0.084	0.099	0.104	0.099	0.084	0.062	0.033	0
FINAL CAMBER ↑	0	1/2	1	1 3/8	1 9/16	1 5/8	1 9/16	1 3/8	1	1/2	0	0	1/2	15/16	1 1/4	1 7/16	1 1/2	1 7/16	1 1/4	15/16	1/2	0	0	1/2	1	1 3/8	1 9/16	1 11/16	1 9/16	1 3/8	1	1/2	0

✳ INCLUDES FUTURE WEARING SURFACE IN SUPERIMPOSED DEAD LOAD.
ALL VALUES ARE SHOWN IN FEET (DECIMAL FORM), EXCEPT "FINAL CAMBER", WHICH IS GIVEN IN INCHES (FRACTION FORM).

PROJECT NO. R-2707B
CLEVELAND COUNTY
STATION: 247+90.66 -L-

STATE OF NORTH CAROLINA
DEPARTMENT OF TRANSPORTATION
RALEIGH

SUPERSTRUCTURE
DEAD LOAD
DEFLECTIONS
(RIGHT LANE)

NORTH CAROLINA PROFESSIONAL SEAL 13825 ENGINEER BRUCE D. KLAPPENBACH
6-27-13

REVISIONS						SHEET NO.
NO.	BY:	DATE:	NO.	BY:	DATE:	S-48
1			3			TOTAL SHEETS
2			4			266

DESIGN ENGINEER OF RECORD: S. T. CHAMPION DATE: 5-13-13
DRAWN BY: D. A. GLADDEN DATE: 10-27-10
CHECKED BY: H. T. BARBOUR DATE: 1-5-12

14-MAY-2013 10:35
R:\Structures\Plans\Bailey\STRland2\dgladden\Microstation\R2707B_SD_STR2.dgn
dgladden

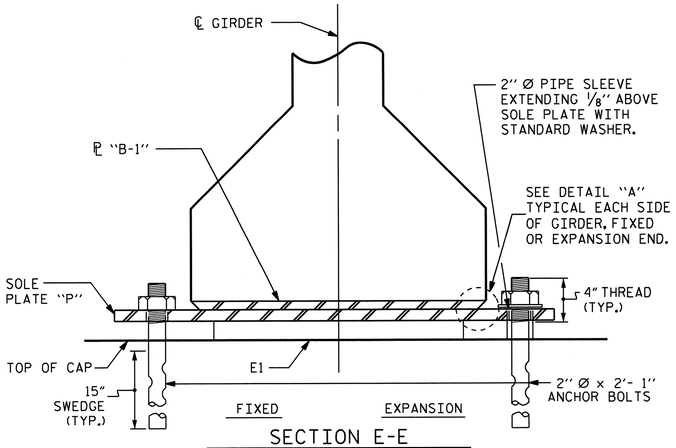

SECTION E-E

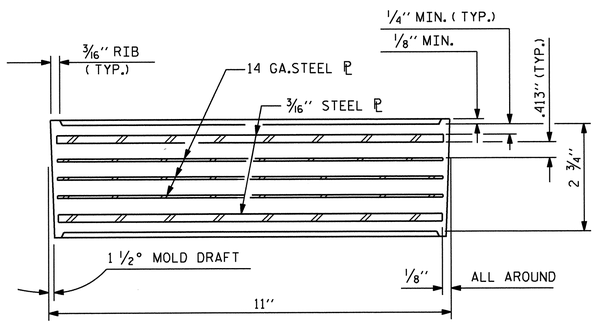

TYPICAL SECTION OF ELASTOMERIC BEARINGS

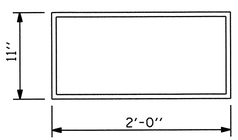

E1 (20 REQ'D)

PLAN VIEW OF ELASTOMERIC BEARING

TYPE VII

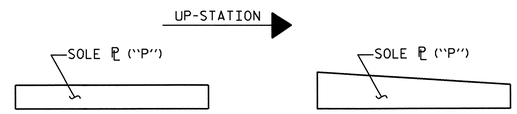

SOLE ℗ PLACEMENT DETAIL

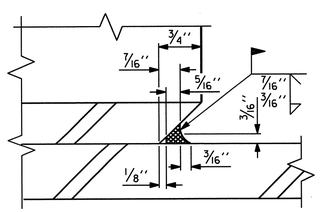

DETAIL "A"

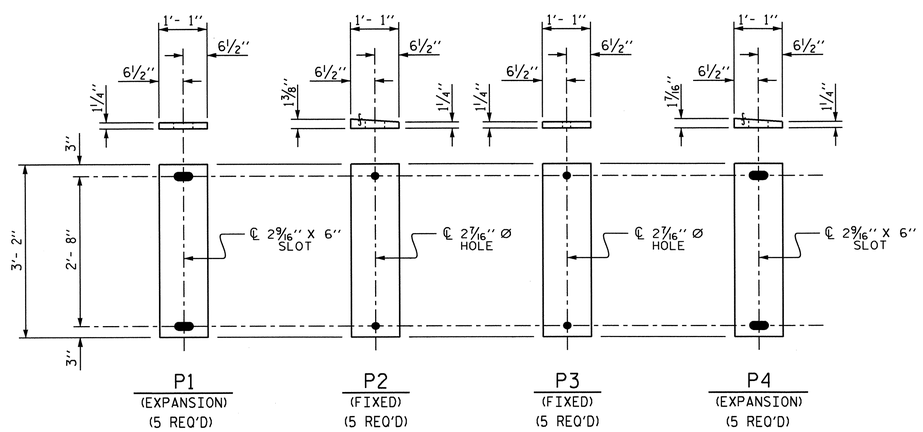

SOLE PLATE DETAILS ("P")

NOTES

AT ALL FIXED POINTS OF SUPPORT, NUTS FOR ANCHOR BOLTS ARE TO BE TIGHTENED FINGER TIGHT AND THEN BACKED OFF 1/2 TURN. THE THREAD OF THE NUT AND BOLT SHALL THEN BE BURRED WITH A SHARP POINTED TOOL.

THE 2" Ø PIPE SLEEVE SHALL BE CUT FROM SCHEDULE 40 PVC PLASTIC PIPE. THE PVC PLASTIC PIPE SHALL MEET THE REQUIREMENTS OF ASTM D1785.

STEEL SOLE PLATES, ANCHOR BOLTS, NUTS, AND WASHERS SHALL BE GALVANIZED IN ACCORDANCE WITH THE STANDARD SPECIFICATIONS.

PRIOR TO WELDING, GRIND THE GALVANIZED SURFACE OF THE PORTION OF THE EMBEDDED PLATE AND SOLE PLATE THAT ARE TO BE WELDED. AFTER WELDING, DAMAGED GALVANIZED SURFACES SHALL BE REPAIRED IN ACCORDANCE WITH THE STANDARD SPECIFICATIONS.

WHEN WELDING THE SOLE PLATE TO THE EMBEDDED PLATE IN THE GIRDER, USE TEMPERATURE INDICATING WAX PENS, OR OTHER SUITABLE MEANS, TO ENSURE THAT THE TEMPERATURE OF THE SOLE PLATE DOES NOT EXCEED 300°F. TEMPERATURES ABOVE THIS MAY DAMAGE THE ELASTOMER.

SOLE PLATE "P", BOLTS, NUTS, WASHERS, AND PIPE SLEEVE SHALL BE INCLUDED IN THE PAY ITEM FOR PRESTRESSED CONCRETE GIRDERS.

ANCHOR BOLTS SHALL MEET THE REQUIREMENTS OF ASTM A449. NUTS SHALL MEET THE REQUIREMENTS OF AASHTO M291-DH OR AASHTO M292-2H. WASHERS SHALL MEET THE REQUIREMENTS OF AASHTO M293. SHOP DRAWINGS ARE NOT REQUIRED FOR ANCHOR BOLT, NUTS AND WASHERS. SHOP INSPECTION IS REQUIRED.

ALL SURFACES OF BEARING PLATES SHALL BE SMOOTH AND STRAIGHT.

FOR STEEL REINFORCED ELASTOMERIC BEARING, SEE SPECIAL PROVISIONS.

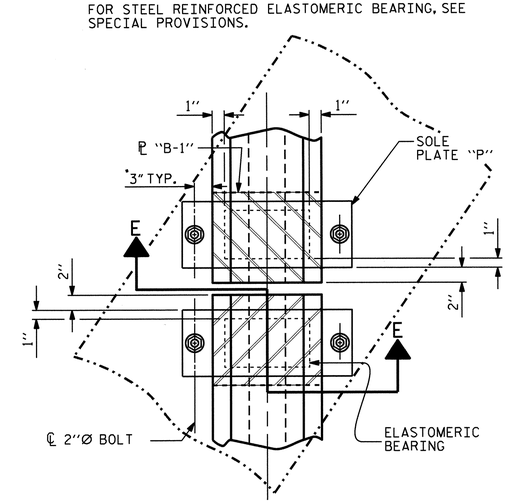

TYPICAL HALF-PLAN
(SHOWING CONTINUOUS BENT)

LOAD RATINGS	
	MAX.D.L.+L.L.
54"PCG -TYPE VII	264 K

PROJECT NO. R-2707B
CLEVELAND COUNTY
STATION: 247+90.66 -L-

STATE OF NORTH CAROLINA
DEPARTMENT OF TRANSPORTATION
RALEIGH

STANDARD

ELASTOMERIC BEARING DETAILS

PRESTRESSED CONCRETE GIRDER SUPERSTRUCTURE (RIGHT LANE)

NORTH CAROLINA PROFESSIONAL SEAL 13822 ENGINEER BRUCE D. KLAPPENBACH
6-27-2013

REVISIONS								SHEET NO.
NO.	BY:	DATE:	NO.	BY:	DATE:			S-49
1			3					TOTAL SHEETS
2			4					266

DESIGN ENGINEER OF RECORD: S. T. CHAMPION DATE : 5-13-13		
ASSEMBLED BY : D. A. GLADDEN DATE : 10-21-10 CHECKED BY : H. T. BARBOUR DATE : 1-5-12		
DRAWN BY : WJH 8/89 CHECKED BY : CRK 8/89	REV. 10/17/00 RWW/LES REV. 7/10/01 RWW/LES REV. 5/1/06 TLA/GM	

14-MAY-2013 10:35
R:\Structures\Plans\Bailey\STRland2\dgladden\Microstation\R2707B_SD_STR2.dgn
dgladden

STR. #2

STD. NO. EB4

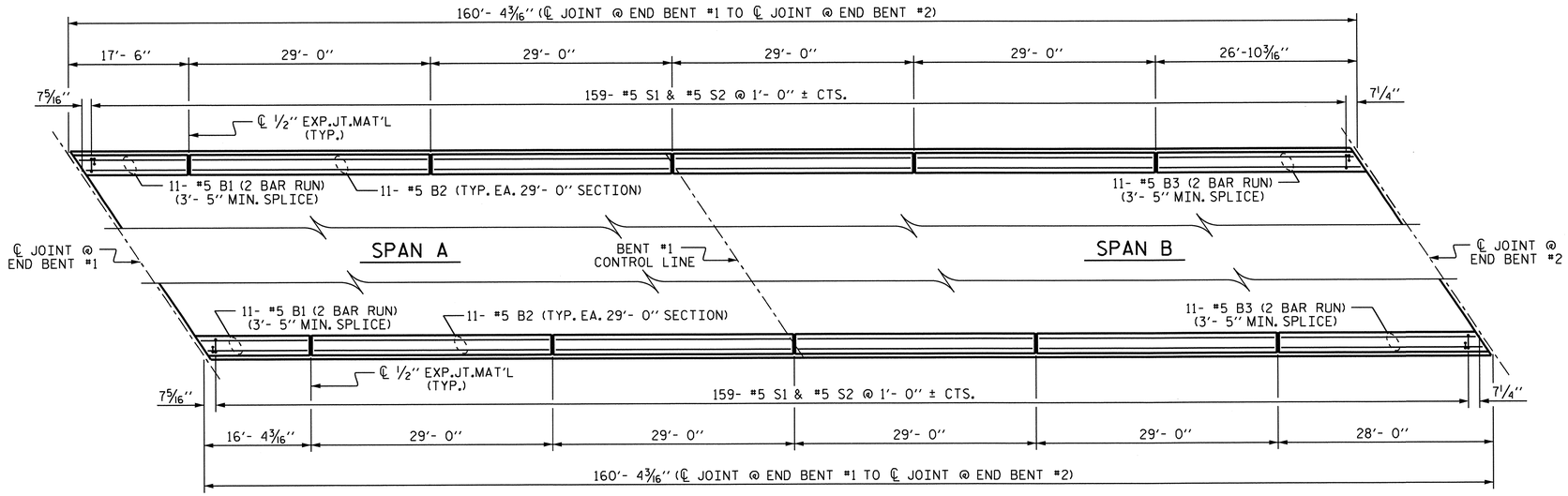

PLAN OF BARRIER RAIL

BAR TYPES

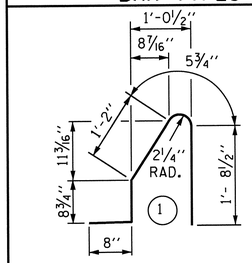

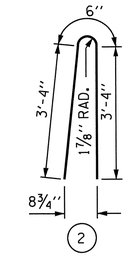

ALL BAR DIMENSIONS ARE OUT TO OUT

BILL OF MATERIAL

FOR CONCRETE BARRIER RAIL ONLY

BAR	NO.	SIZE	TYPE	LENGTH	WEIGHT
* B1	44	#5	STR	10'- 2"	467
* B2	88	#5	STR	28'- 8"	2631
* B3	44	#5	STR	15'- 4"	704
* S1	318	#5	1	4'- 9"	1575
* S2	318	#5	2	7'- 0"	2322

* EPOXY COATED REINFORCING STEEL	7699	LBS.
CLASS AA CONCRETE	43.6	CU. YDS.
CONCRETE BARRIER RAIL	320.70	LIN. FT.

NOTES

THE BARRIER RAIL IN EACH SPAN SHALL NOT BE CAST UNTIL ALL SLAB CONCRETE IN THAT SPAN HAS BEEN CAST AND HAS REACHED A MINIMUM COMPRESSIVE STRENGTH OF 3,000 PSI.

ALL REINFORCING STEEL IN BARRIER RAILS SHALL BE EPOXY COATED.

GROOVED CONTRACTION JOINTS, 1/2" IN DEPTH, SHALL BE TOOLED IN ALL EXPOSED FACES OF THE BARRIER RAIL AND IN ACCORDANCE WITH ARTICLE 825-10(B) OF THE STANDARD SPECIFICATIONS. THE CONTRACTION JOINT SHALL BE LOCATED AT EACH THIRD POINT BETWEEN BARRIER RAIL EXPANSION JOINTS. ONLY ONE CONTRACTION JOINT IS REQUIRED AT MIDPOINT OF BARRIER RAIL SEGMENTS LESS THAN 20 FEET IN LENGTH AND NO CONTRACTION JOINTS ARE REQUIRED FOR THOSE SEGMENTS LESS THAN 10 FEET IN LENGTH.

FOR BARRIER RAIL ON APPROACH SLAB, SEE "BRIDGE APPROACH SLAB DETAILS" SHEET.

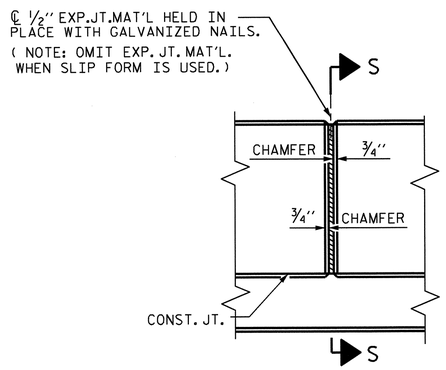

ELEVATION AT EXPANSION JOINTS

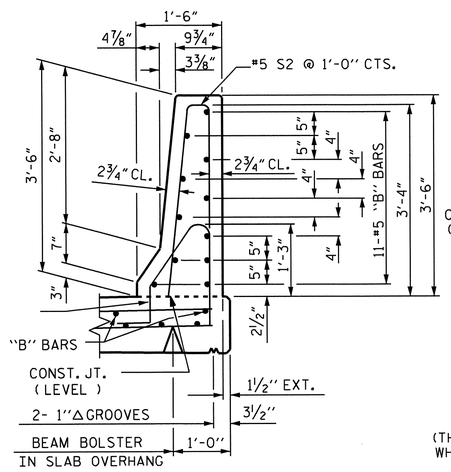

SECTION THRU RAIL

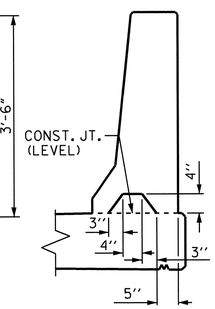

SECTION S-S

AT DAM IN OPEN JOINT (THIS IS TO BE USED ONLY WHEN SLIP FORM IS USED)

BARRIER RAIL DETAILS

PROJECT NO. R-2707B

CLEVELAND COUNTY

STATION: 247+90.66 -L-

STATE OF NORTH CAROLINA
DEPARTMENT OF TRANSPORTATION
RALEIGH

CONCRETE BARRIER RAIL (RIGHT LANE)

NORTH CAROLINA PROFESSIONAL SEAL 15875 ENGINEER BRUCE D. KLAPPENBACH
6-27-2013

REVISIONS								SHEET NO.
NO.	BY:	DATE:	NO.	BY:	DATE:			S-50
1			3					TOTAL SHEETS
2			4					266

DESIGN ENGINEER OF RECORD: _____ DATE : _____

ASSEMBLED BY : D. A. GLADDEN DATE : 10-27-10
CHECKED BY : H. T. BARBOUR DATE : 1-5-12

DRAWN BY : ARB 5/87
CHECKED BY : SJD 9/87

REV. 10/17/00 RWW/LES
REV. 5/7/03R RWW/JTE
REV. 5/1/06R TLA/GM

24-JUN-2013 12:46
R:\Structures\Plans\Bailey\STRland2\dgladden\Microstation\R2707B_SD_STR2.dgn
dgladden

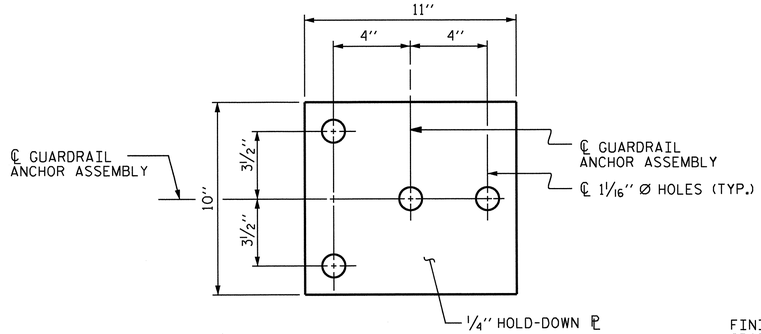

PLAN

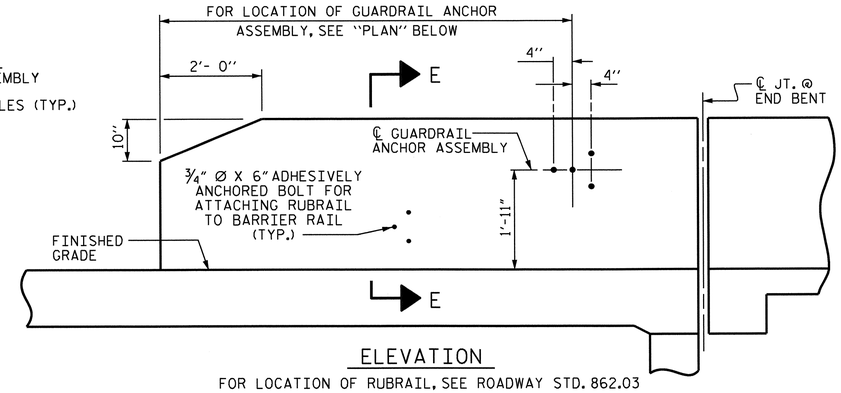

ELEVATION

FOR LOCATION OF RUBRAIL, SEE ROADWAY STD. 862.03

NOTES

THE GUARDRAIL ANCHOR ASSEMBLY SHALL CONSIST OF A 1/4'' HOLD-DOWN PLATE AND 4 - 7/8'' Ø BOLTS WITH NUTS AND WASHERS, RUBRAIL, AND ADHESIVELY ANCHORED BOLTS.

THE HOLD-DOWN PLATE SHALL CONFORM TO AASHTO M270 GRADE 36. AFTER FABRICATION, THE HOLD-DOWN PLATE SHALL BE HOT-DIP GALVANIZED IN ACCORDANCE WITH AASHTO M111.

BOLTS SHALL CONFORM TO THE REQUIREMENTS OF ASTM A307 AND NUTS SHALL CONFORM TO THE REQUIREMENTS OF AASHTO M291. BOLTS, NUTS AND WASHERS SHALL BE GALVANIZED. (AT THE CONTRACTOR'S OPTION, STAINLESS STEEL BOLTS, NUTS AND WASHERS MAY BE USED AS AN ALTERNATE FOR THE 7/8'' Ø GALVANIZED BOLTS, NUTS AND WASHERS. THEY SHALL CONFORM TO OR EXCEED THE MECHANICAL REQUIREMENTS OF ASTM A307. THE USE OF THIS ALTERNATE SHALL BE APPROVED BY THE ENGINEER.)

THE GUARDRAIL ANCHOR ASSEMBLY IS REQUIRED AT ALL POINTS WHERE APPROACH GUARDRAIL IS TO BE ATTACHED TO THE END OF BARRIER RAIL. FOR POINTS OF ATTACHMENT, SEE SKETCH.

AFTER INSTALLATION, THE EXPOSED THREAD OF THE BOLT SHALL BE BURRED WITH A SHARP POINTED TOOL.

THE COST OF THE GUARDRAIL ANCHOR ASSEMBLY SHALL BE INCLUDED IN THE UNIT CONTRACT PRICE BID FOR CONCRETE BARRIER RAIL.

THE 1 1/4'' Ø HOLES SHALL BE FORMED OR DRILLED WITH A CORE BIT. IMPACT TOOLS WILL NOT BE PERMITTED. ANY CONCRETE DAMAGED BY THIS WORK SHALL BE REPAIRED TO THE SATISFACTION OF THE ENGINEER.

THE C6 X 8.2 RUBRAIL IS TO BE ADHESIVELY ANCHORED TO THE RAIL USING THREE 3/4"Ø X 6" BOLTS WITH WASHERS. LEVEL ONE FIELD TESTING IS REQUIRED, AND THE YIELD LOAD OF THE 3/4"Ø BOLT IS 12 KIPS. FOR ADHESIVELY ANCHORED ANCHOR BOLTS OR DOWELS, SEE STANDARD SPECIFICATIONS. SEE ROADWAY STANDARD 862.03 FOR DETAILS AND LOCATION OF THE RUBRAIL.

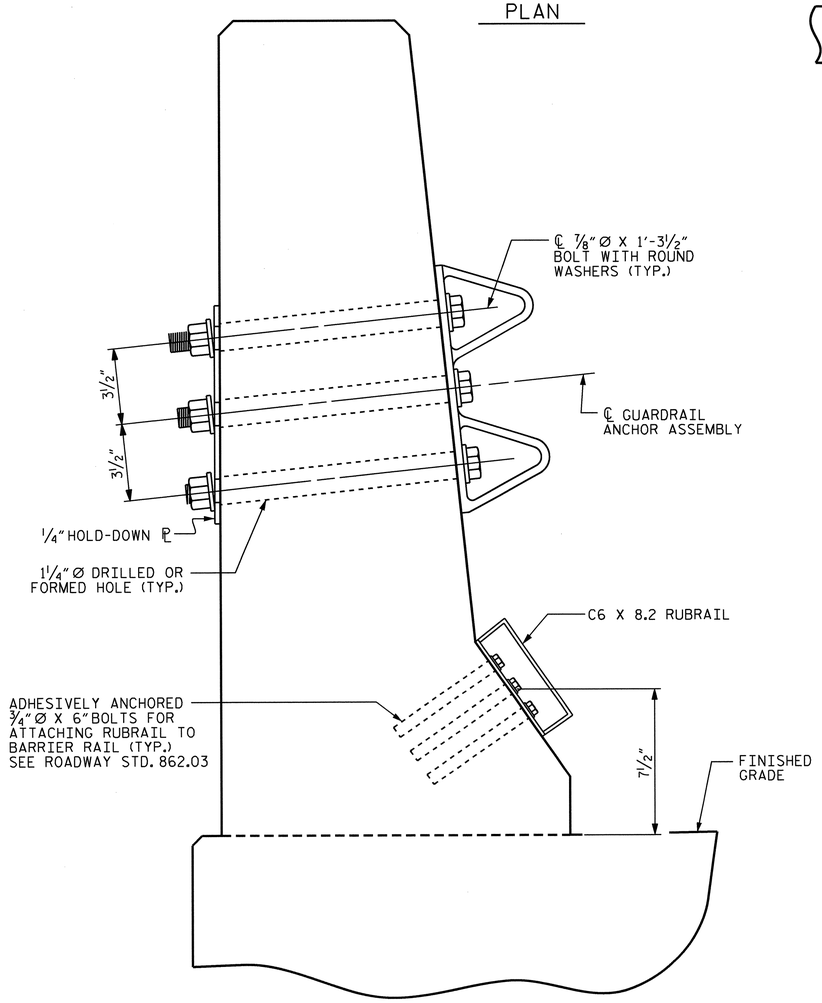

SECTION E-E

GUARDRAIL ANCHOR ASSEMBLY DETAILS

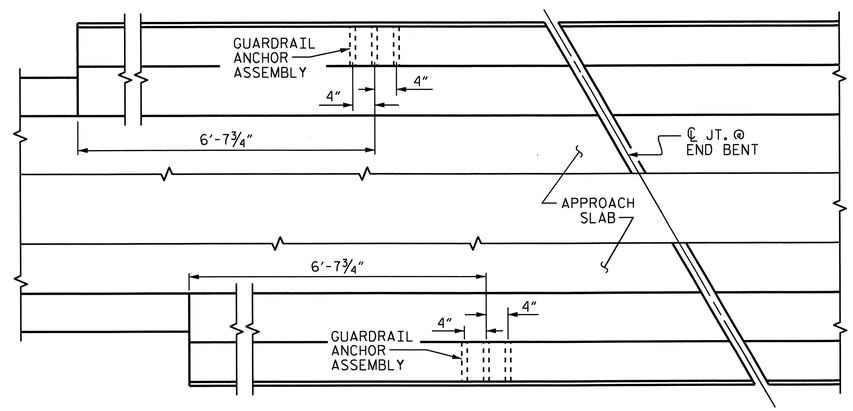

PLAN

LOCATION OF ANCHORS FOR GUARDRAIL

END BENT #1 SHOWN, END BENT #2 SIMILAR.

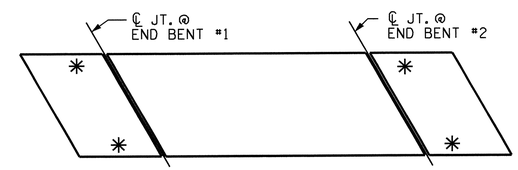

SKETCH SHOWING POINTS OF ATTACHMENTS

✳ DENOTES GUARDRAIL ANCHOR ASSEMBLY

PROJECT NO. R-2707B
CLEVELAND COUNTY
STATION: 247+90.66 -L-

STATE OF NORTH CAROLINA
DEPARTMENT OF TRANSPORTATION
RALEIGH

STANDARD
GUARDRAIL ANCHORAGE FOR BARRIER RAIL (RIGHT LANE)

NORTH CAROLINA PROFESSIONAL SEAL 15825 BRIDGE ENGINEER D. KLAPPENBACH
6-27-2013

REVISIONS						SHEET NO.
NO.	BY:	DATE:	NO.	BY:	DATE:	S-51
1			3			TOTAL SHEETS
2			4			266

STR. #2 STD. NO. GRA2

DESIGN ENGINEER OF RECORD: _____ DATE : _____
ASSEMBLED BY : D. A. GLADDEN DATE : 10-27-10
CHECKED BY : H. T. BARBOUR DATE : 1-5-12
DRAWN BY : TLA 5/06
CHECKED BY : GM 5/06
ADDED 5/1/06RR KMM/GM
REV. 10/1/11 MAA/GM

24-JUN-2013 12:46
R:\Structures\Plans\Bailey\STRland2\dgladden\Microstation\R2707B_SD_STR2.dgn
dgladden

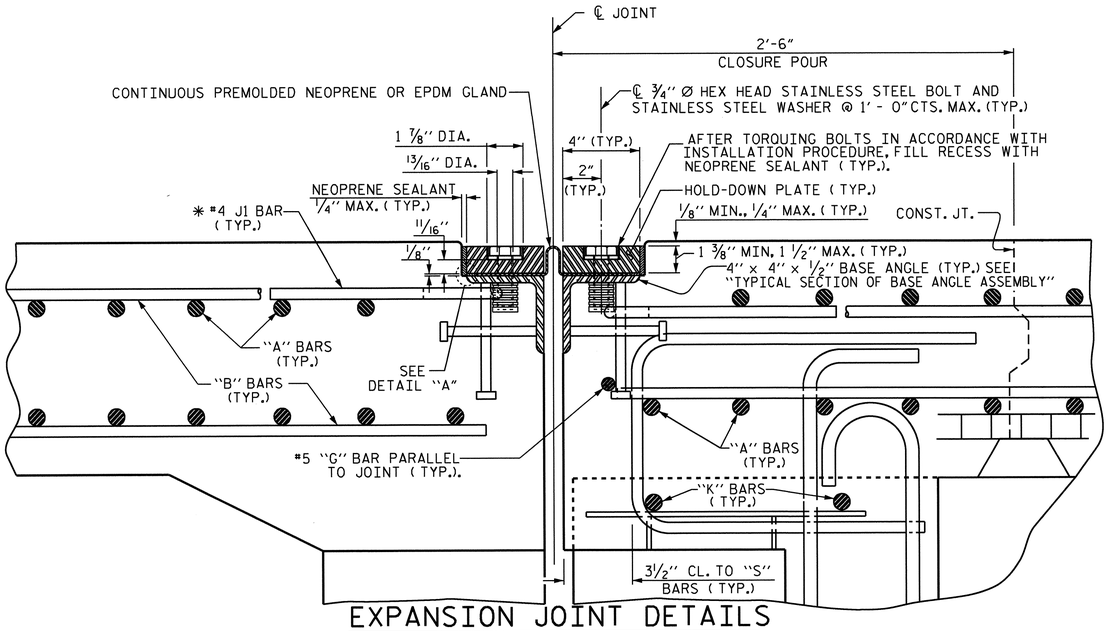

EXPANSION JOINT DETAILS

SECTION NORMAL TO JOINT -- PRESTRESSED GIRDER SUPERSTRUCTURE

* THE QUANTITY OF #4 J1 BARS ON THE BILL OF MATERIAL IS BASED ON 1'-0" CENTERS. J1 BARS SHALL BE PLACED AT EACH VERTICAL STUD ANCHOR BOLT. IN THE EVENT THAT THE NUMBER OF VERTICAL STUD ANCHORS EXCEEDS THE NUMBER OF J1 BARS SPECIFIED, ADDITIONAL J1 BARS WILL NOT BE REQUIRED.

INSTALLATION PROCEDURE

1. A TEMPLATE OR OTHER SUITABLE DEVICE SHALL BE USED TO FORM THE TOP OF THE EXPANSION JOINT SEAL BLOCKOUT TO THE PROPER DEPTH AND WIDTH. THE TEMPLATE SHALL BE 4 1/8" TO 4 1/4" WIDE AND OF SUCH THICKNESS AS TO PROVIDE FOR CORRECT FINAL ELEVATION OF TOP OF HOLD-DOWN PLATES. THE TEMPLATE SHALL BE ATTACHED TO THE BASE ANGLE ASSEMBLY WITH THE ¾" Ø HEX HEAD BOLTS PROVIDED FOR THE HOLD-DOWN PLATES. A 1" Ø HOLE SHALL BE PROVIDED IN THE TEMPLATE CENTERED OVER EACH WEEP HOLE IN THE 4" X 4" X 1/2" BASE ANGLE. OTHER METHODS OF INSURING DRAINAGE THROUGH WEEP HOLES MAY BE EMPLOYED SUBJECT TO ENGINEER'S APPROVAL.
2. AFTER THE CONCRETE HAS BEEN CAST ON BOTH SIDES OF THE JOINT, REMOVE THE TEMPLATE. THOROUGHLY CLEAN THE BOLT HOLES AND THE ANGLE PLATE. REMOVE ANY EXCESS CONCRETE THAT COMES OUT OF THE WEEP HOLES. ANY DAMAGED STEEL SHALL BE COATED WITH A MINIMUM THICKNESS OF 4 DRY MILS OF ZINC-RICH PAINT IN ACCORDANCE WITH THE STANDARD SPECIFICATIONS.
3. LAY THE GLAND ON THE BASE ANGLE AND FIELD MARK THE GLAND FOR THE BOLT HOLES. HOLES IN THE GLAND SHALL BE PUNCHED ⅞" IN DIAMETER WITH A HAND PUNCH.
4. IN ORDER TO CHECK FOR PROPER ALIGNMENT, PLACE THE GLAND AND HOLD-DOWN PLATES ON THE BASE ANGLE. DO NOT APPLY NEOPRENE SEALANT. BOLT THE HOLD-DOWN PLATES TO THE BASE ANGLE BUT DO NOT TIGHTEN. THE ENGINEER SHALL INSPECT THE JOINT SEAL DEVICE FOR PROPER ALIGNMENT.
5. AFTER INSPECTION, REMOVE THE HOLD-DOWN PLATES AND GLAND. APPLY NEOPRENE SEALANT TO THE BASE ANGLE IN ACCORDANCE WITH THE "INSTALLATION SKETCH". PLACE GLAND AND HOLD-DOWN PLATES ON THE BASE ANGLE. BOLT THE HOLD-DOWN PLATES TO THE BASE ANGLE ASSEMBLY AND TORQUE THE BOLTS TO 88 FT-LBS WITH A TORQUE WRENCH. THE TORQUE WRENCH SHALL BE CALIBRATED IN ACCORDANCE WITH SECTION 440-10 (D) OF THE STANDARD SPECIFICATIONS. CHECK THE TORQUE AFTER THREE (3) HOURS AND, IF NECESSARY, RETIGHTEN TO 88 FT-LBS. A FINAL CHECK SHALL BE MADE AT SEVEN (7) DAYS. TORQUE SHALL NOT BE LESS THAN 80 FT-LBS AFTER SEVEN (7) DAYS.
6. AFTER PROPER TORQUING, CLEAN THE BOLT HOLE RECESSES AND THE RECESS BETWEEN THE JOINT SEAL DEVICE AND CONCRETE, COMPLETELY FILL THESE RECESSES WITH NEOPRENE SEALANT.

GENERAL NOTES

1. FOR EXPANSION JOINT SEALS, SEE SPECIAL PROVISIONS.
2. ALL PLATES AND ANGLES SHALL CONFORM TO AASHTO M270 GRADE 36 STEEL OR APPROVED EQUAL. ALL HOLD-DOWN BOLTS SHALL CONFORM TO ASTM F593 ALLOY 304 STAINLESS STEEL AND WASHERS SHALL CONFORM TO ASTM F844 EXCEPT THEY SHALL BE MADE FROM ALLOY 304 STAINLESS STEEL. ALL STUD ANCHORS SHALL CONFORM TO AASHTO M169, GRADES 1010 THRU 1020 OR APPROVED EQUAL. ALL CONCRETE INSERTS SHALL BE CLOSED END AND SHALL CONFORM TO AASHTO M169, GRADE 12L14. TENSILE CAPACITY SHALL BE 3000 LBS. MIN.
3. A PREMOLDED CORRUGATED OR NON-CORRUGATED GLAND SHALL BE USED FOR JOINTS SKEWED BETWEEN 50° THRU 130°. FOR JOINTS SKEWED LESS THAN 50° OR MORE THAN 130°, ONLY A CORRUGATED GLAND SHALL BE USED.
4. CLOSED END FERRULES AND STUD ANCHORS SHALL BE SHOP WELDED AND ALL HOLES SHALL BE SHOP DRILLED AS SHOWN ON PLANS. STUD ANCHORS SHALL BE ELECTRIC ARC END WELDED WITH COMPLETE FUSION.
5. SURFACES COMING IN CONTACT WITH NEOPRENE SHALL BE GROUND SMOOTH PRIOR TO METALLIZING.
6. UPON COMPLETION OF SHOP FABRICATION, THE HOLD DOWN PLATE AND BASE ANGLE ASSEMBLY, AS SHOWN IN THE "TYPICAL SECTION OF BASE ANGLE ASSEMBLY", SHALL BE METALLIZED. SEE SPECIAL PROVISION FOR THERMAL SPRAYED COATINGS (METALLIZATION).
7. BASE ANGLE ASSEMBLY SHALL BE CONTINUOUS FOR THE LENGTH OF THE JOINT. AT CROWN BREAKS, THE ENDS OF THE BASE ANGLE ASSEMBLY SHALL BE CUT PARALLEL TO THE BRIDGE CENTERLINE FOR SKEWS LESS THAN 80° AND GREATER THAN 100°. FINISHED WELD SHALL BE GROUND SMOOTH AND COATED WITH A MINIMUM THICKNESS OF 4 DRY MILS OF ZINC-RICH PAINT IN ACCORDANCE WITH THE STANDARD SPECIFICATIONS.
8. FIELD SPLICES OF HOLD-DOWN PLATES SHALL BE KEPT TO A MINIMUM. CONTRACTOR SHALL FURNISH DETAILED PLANS SHOWING PROPOSED SPLICE LOCATIONS FOR APPROVAL. HOLD-DOWN PLATES SHALL NOT EXCEED 20' LENGTHS UNLESS APPROVED BY THE ENGINEER.
9. NO ALTERNATE JOINT DETAILS SHALL BE PERMITTED IN LIEU OF THOSE SHOWN ON THESE PLANS.
10. THE CONTRACTOR MAY, AT HIS OPTION, USE ADHESIVELY ANCHORED ANCHOR BOLTS IN PLACE OF CONCRETE INSERTS FOR COVER PLATES. THE YIELD LOAD OF THE ¾" Ø BOLT IS 10 KIPS. FIELD TESTING OF THE ADHESIVE BONDING SYSTEM IS NOT REQUIRED.

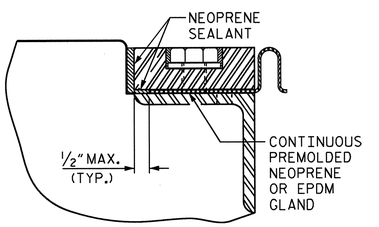

DETAIL "A"

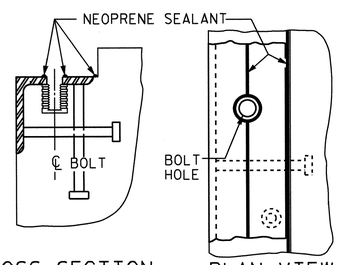

CROSS SECTION PLAN VIEW

INSTALLATION SKETCH

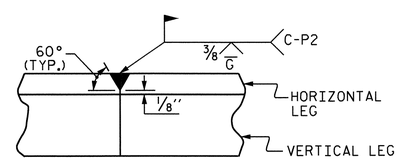

DETAIL- FIELD WELD SPLICE OF BASE ANGLE

MOVEMENT AND SETTING AT JOINT					
	SKEW ANGLE ANGLE	TOTAL MOVEMENT (ALONG ℄ RDWY)	PERPENDICULAR JOINT OPENING AT 45° F	PERPENDICULAR JOINT OPENING AT 60° F	PERPENDICULAR JOINT OPENING AT 90° F
END BENT #1	52°34'31"	11/16"	1 3/8"	1 1/4"	1 1/16"
END BENT #2	52°34'31"	11/16"	1 3/8"	1 1/4"	1 1/16"

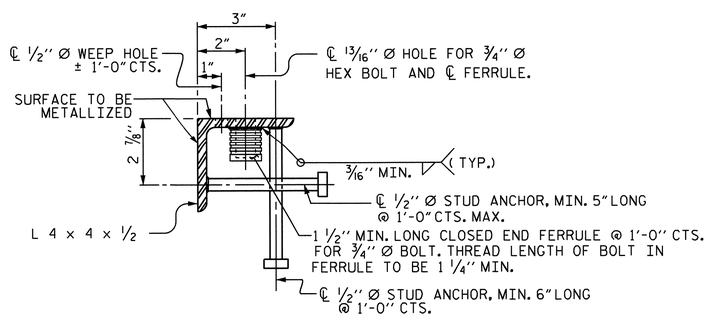

TYPICAL SECTION OF BASE ANGLE ASSEMBLY

PROJECT NO. R-2707B
CLEVELAND COUNTY
STATION: 247+90.66 -L-

SHEET 1 OF 3

STATE OF NORTH CAROLINA
DEPARTMENT OF TRANSPORTATION
RALEIGH

STANDARD

EXPANSION JOINT SEAL DETAILS (RIGHT LANE)

NORTH CAROLINA PROFESSIONAL SEAL 15825 ENGINEER BRUCE D. KLAPPERICH 6-27-2013

REVISIONS							SHEET NO.
NO.	BY:	DATE:	NO.	BY:	DATE:		S-52
1			3				TOTAL SHEETS
2			4				266

STR. #2 STD. NO. EJS1

DESIGN ENGINEER OF RECORD: S. T. CHAMPION DATE: 5-13-13			
ASSEMBLED BY: D. A. GLADDEN DATE: 10-27-10			
CHECKED BY: H. T. BARBOUR DATE: 1-5-12			
DRAWN BY: REK 9/87	REV. 10/17/00 RWW/LES		
CHECKED BY: CRK 10/87	REV. 5/7/03R RWW/LES		
	REV. 5/1/06 TLA/GM		

14-MAY-2013 10:36
R:\Structures\Plans\Bailey\STR1and2\dgladden\Microstation\R2707B_SD_STR2.dgn
dgladden

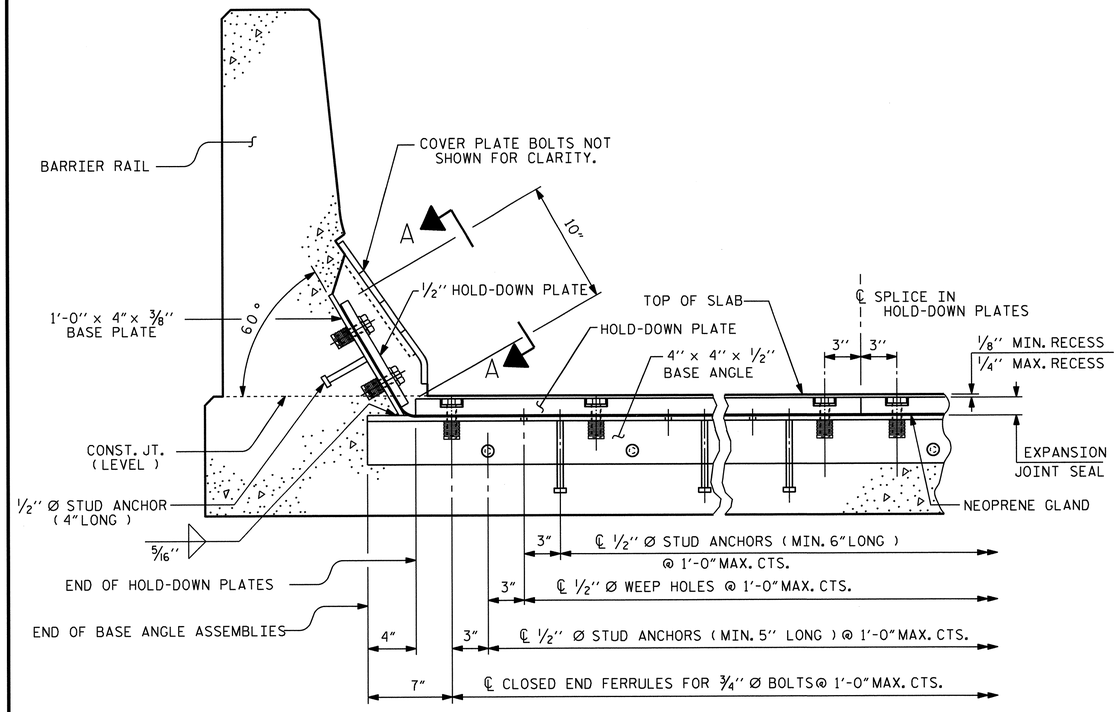

SECTION THRU RAIL NORMAL TO JOINT

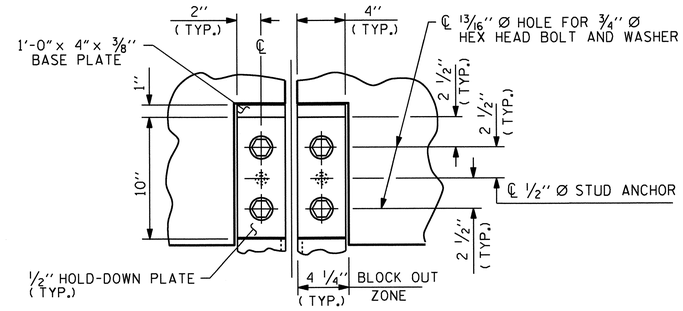

SECTION A - A

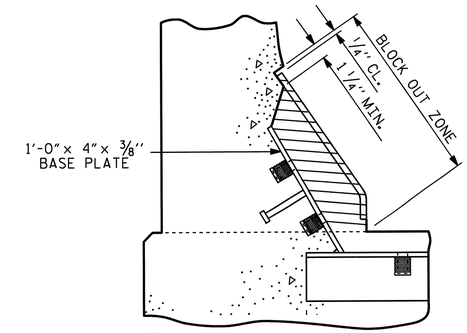

BLOCK OUT DETAIL

SEE "SECTION A - A" FOR OTHER DETAILS.

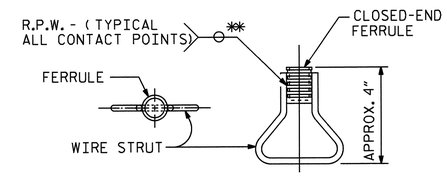

PLAN ELEVATION

CONCRETE INSERT

** EACH WELDED ATTACHMENT OF WIRE TO FERRULE SHALL DEVELOP THE TENSILE STRENGTH OF THE WIRE.

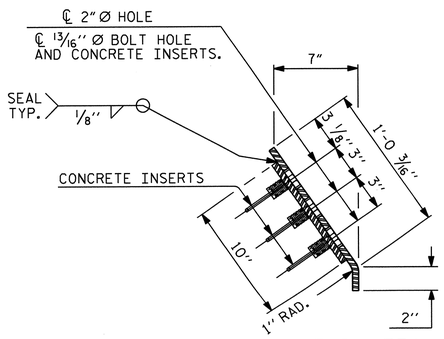

END VIEW

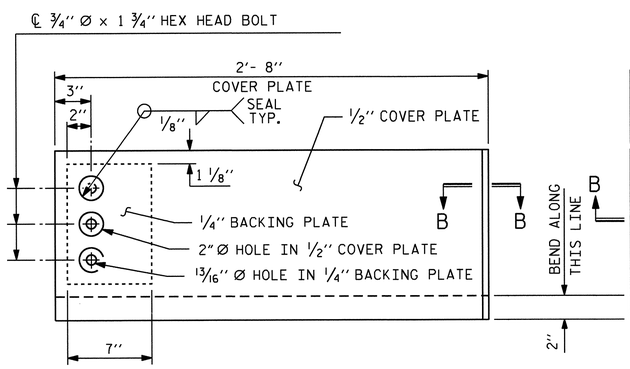

TYPE I - ELEVATION VIEW

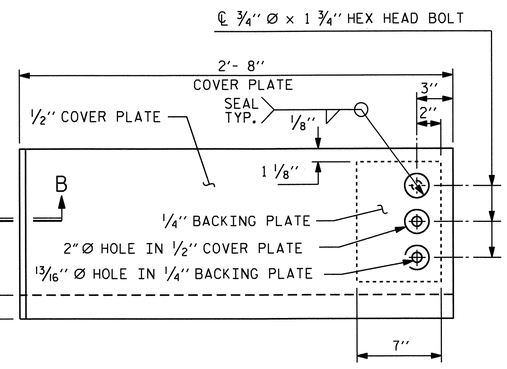

TYPE II - ELEVATION VIEW

COVER PLATE DETAILS

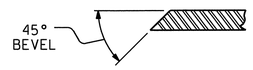

SECTION B - B

PROJECT NO. R-2707B
CLEVELAND COUNTY
STATION: 247+90.66 -L-

SHEET 2 OF 3

STATE OF NORTH CAROLINA
DEPARTMENT OF TRANSPORTATION
RALEIGH

EXPANSION JOINT SEAL DETAILS FOR BARRIER RAIL (RIGHT LANE)

NORTH CAROLINA PROFESSIONAL SEAL 15825 ENGINEER D. KLAPPENBACH
6-27-2013

REVISIONS							SHEET NO.
NO.	BY:	DATE:	NO.	BY:	DATE:		S-53
1			3				TOTAL SHEETS
2			4				266

DESIGN ENGINEER OF RECORD: _____ DATE: _____

ASSEMBLED BY: D. A. GLADDEN DATE: 10-27-10
CHECKED BY: H. T. BARBOUR DATE: 1-5-12

DRAWN BY: REK 9/87
CHECKED BY: CRK 10/87

REV. 7/17/98 RWW/LES
REV. 10/17/00 RWW/LES
REV. 5/1/06 TLA/GM

14-MAY-2013 10:37
R:\Structures\Plans\Bailey\STRland2\dgladden\Microstation\R2707B_S0_STR2.dgn
dgladden

STR. #2 STD. NO. EJS2

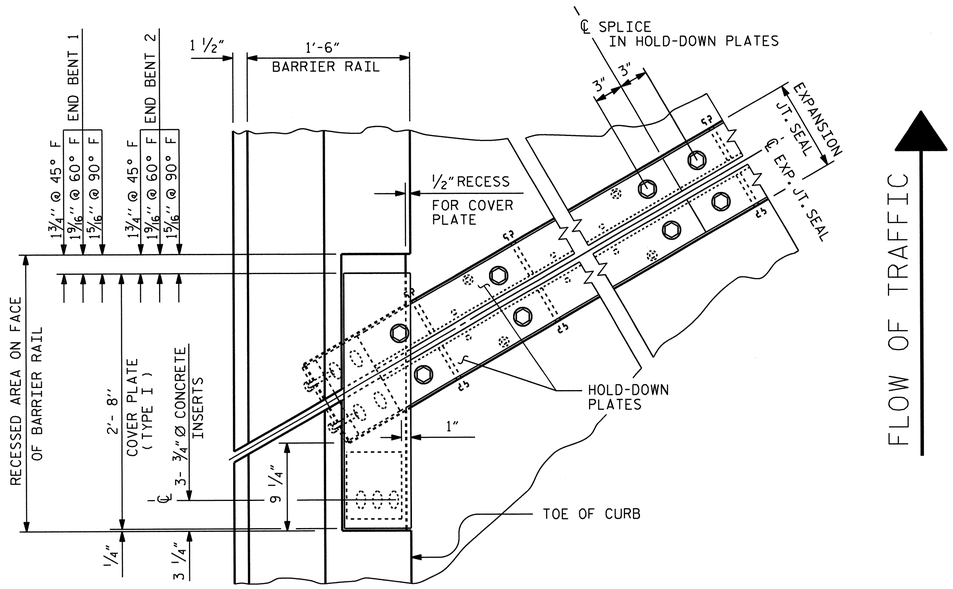

PLAN OF EXPANSION JOINT SEAL - LEFT SIDE

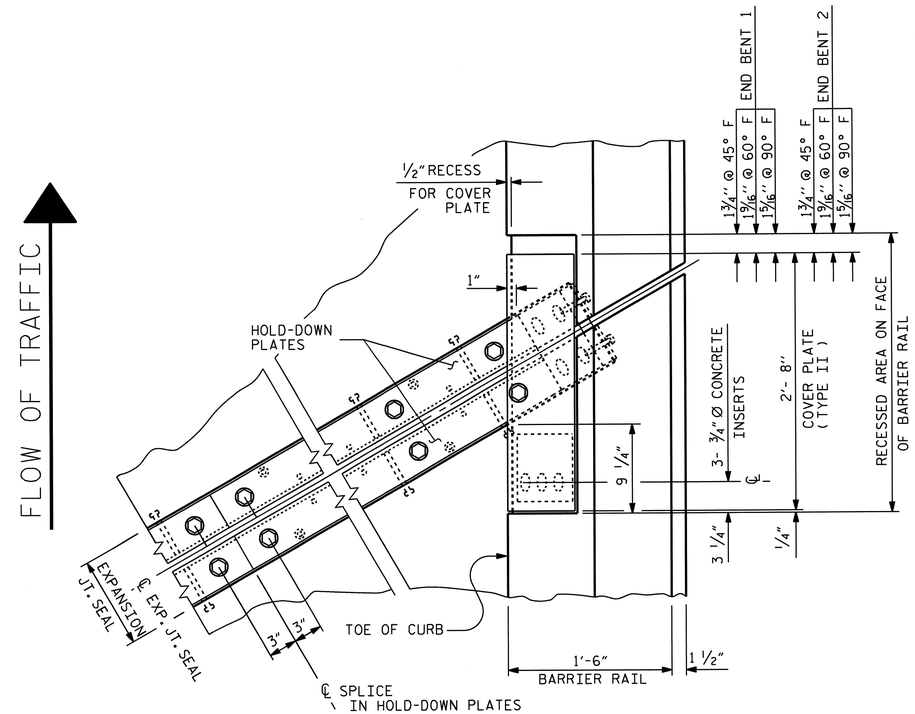

PLAN OF EXPANSION JOINT SEAL - RIGHT SIDE

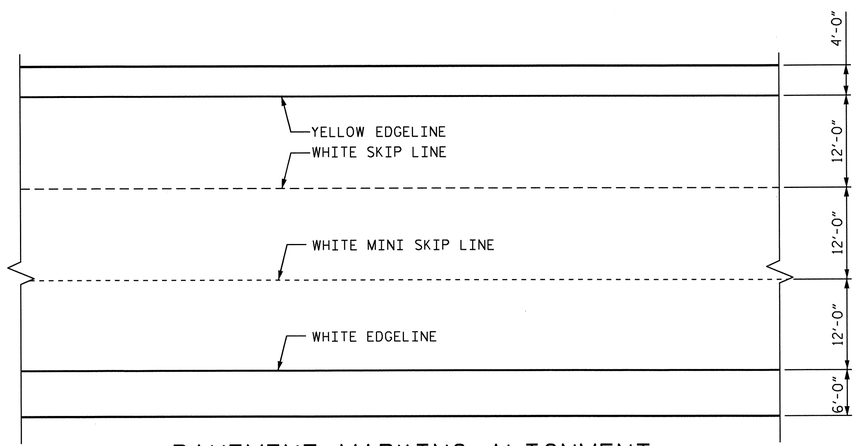

PAVEMENT MARKING ALIGNMENT

PROJECT NO. R-2707B

CLEVELAND COUNTY

STATION: 247+90.66 -L-

SHEET 3 OF 3

STATE OF NORTH CAROLINA
DEPARTMENT OF TRANSPORTATION
RALEIGH

EXPANSION JOINT SEAL DETAILS FOR BARRIER RAIL (RIGHT LANE)

NORTH CAROLINA PROFESSIONAL SEAL 15825 ENGINEER BRYCE D. KLAPPENBACH
6-27-2013

REVISIONS						SHEET NO.
NO.	BY:	DATE:	NO.	BY:	DATE:	S-54
1			3			TOTAL SHEETS
2			4			266

DESIGN ENGINEER OF RECORD: _____ DATE : _____

DRAWN BY : D. A. GLADDEN DATE : 10-27-10

CHECKED BY : H. T. BARBOUR DATE : 1-5-12

24-JUN-2013 12:47
R:\Structures\Plans\Bailey\STRland2\dgladden\Microstation\R2707B_SD_STR2.dgn
dgladden

STR. #2

BILL OF MATERIAL

BAR	NO.	SIZE	TYPE	LENGTH	WEIGHT
✱ A1	267	#5	STR	48'-11"	13622
A2	267	#5	STR	48'-11"	13622
✱ A101	6	#5	STR	47'- 5"	297
✱ A102	6	#5	STR	45- 7"	285
✱ A103	6	#5	STR	43'-10"	274
✱ A104	6	#5	STR	42'- 0"	263
✱ A105	6	#5	STR	40'- 3"	252
✱ A106	6	#5	STR	38'- 5"	240
✱ A107	6	#5	STR	36'- 8"	229
✱ A108	6	#5	STR	34'-10"	218
✱ A109	6	#5	STR	33' 0"	207
✱ A110	6	#5	STR	31'- 3"	196
✱ A111	6	#5	STR	29'- 5"	184
✱ A112	6	#5	STR	27'- 8"	173
✱ A113	6	#5	STR	25'-10"	162
✱ A114	6	#5	STR	24'- 1"	151
✱ A115	6	#5	STR	22'- 3"	139
✱ A116	6	#5	STR	20'- 6"	128
✱ A117	6	#5	STR	18'- 8"	117
✱ A118	6	#5	STR	16'-10"	105
✱ A119	6	#5	STR	15'- 1"	94
✱ A120	6	#5	STR	13'- 3"	83
✱ A121	6	#5	STR	11'- 6"	72
✱ A122	6	#5	STR	9'- 8"	60
✱ A123	6	#5	STR	7'-11"	50
✱ A124	6	#5	STR	6'- 1"	38
✱ A125	6	#5	STR	4'- 3"	27
✱ A126	6	#5	STR	2'- 6"	16
A201	6	#5	STR	47'- 5"	297
A202	6	#5	STR	45'- 7"	285
A203	6	#5	STR	43'-10"	274
A204	6	#5	STR	42'- 0"	263
A205	6	#5	STR	40'- 3"	252
A206	6	#5	STR	38'- 5"	240
A207	6	#5	STR	36'- 8"	229
A208	6	#5	STR	34'-10"	218
A209	6	#5	STR	33'- 0"	207
A210	6	#5	STR	31'- 3"	196
A211	6	#5	STR	29'- 5"	184
A212	6	#5	STR	27'- 8"	173
A213	6	#5	STR	25'-10"	162
A214	6	#5	STR	24'- 1"	151
A215	6	#5	STR	22'- 3"	139
A216	6	#5	STR	20'- 6"	128
A217	6	#5	STR	18'- 8"	117
A218	6	#5	STR	16'-10"	105
A219	6	#5	STR	15'- 1"	94
A220	6	#5	STR	13'- 3"	83
A221	6	#5	STR	11'- 6"	72
A222	6	#5	STR	9'- 8"	60
A223	6	#5	STR	7'-11"	50
A224	6	#5	STR	6'- 1"	38
A225	6	#5	STR	4'- 3"	27
A226	6	#5	STR	2'- 6"	16
✱ B1	94	#4	STR	25'- 8"	1612
✱ B2	94	#4	STR	29'- 3"	1837
✱ B3	47	#6	STR	58'- 3"	4112
✱ B4	44	#6	STR	24'- 1"	1592
✱ B5	156	#6	STR	55'- 1"	12907
✱ C1	4	#5	STR	32'- 2"	134
✱ J1	114	#4	8	1'- 5"	108
✱ K1	8	#8	1	16'- 1"	344
✱ K2	12	#8	2	24'-1"	772
✱ K3	24	#6	STR	10'- 8"	385
K4	8	#4	STR	10'- 8"	57
K5	16	#4	STR	11'-11"	127
K6	8	#4	STR	10'- 4"	55
K7	8	#4	STR	9'- 0"	48
K8	10	#4	6	7'-10"	52
K9	15	#4	7	15'- 8"	157
✱ S1	80	#4	3	4'-11"	263
✱ S2	80	#5	5	6'- 0"	501
S3	136	#4	4	2'- 9"	250
✱ U1	28	#4	2	13'- 0"	243
✱ U2	8	#4	2	11'- 0"	59

REINFORCING STEEL = 18428 LBS
✱ EPOXY COATED REINF. STEEL = 42551 LBS

BAR TYPES

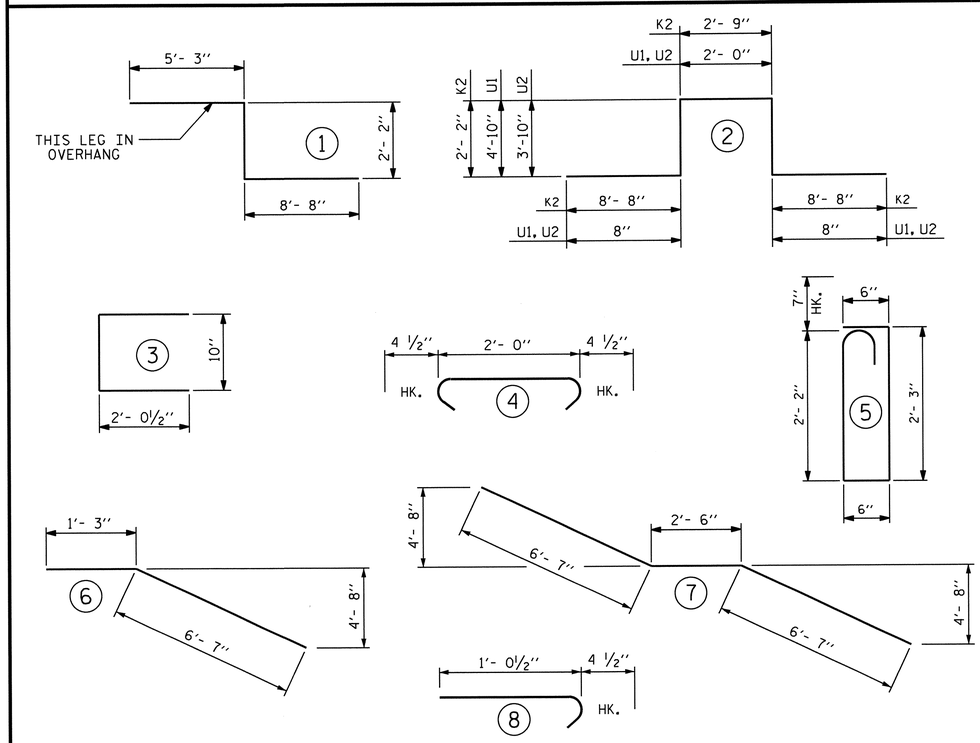

ALL BAR DIMENSIONS ARE OUT TO OUT

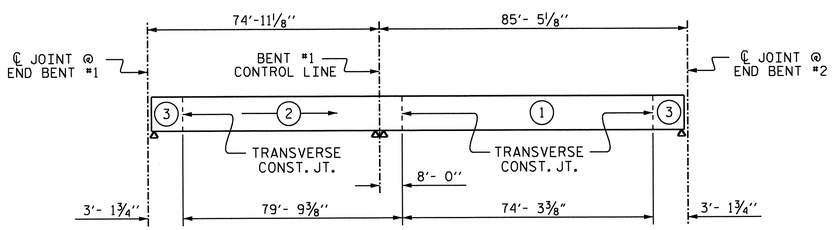

POURING SEQUENCE

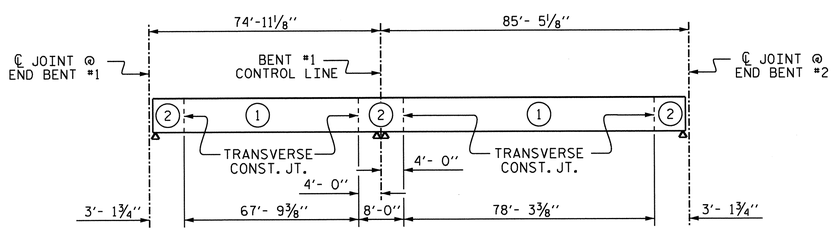

OPTIONAL POURING SEQUENCE

POUR #2 CANNOT BE STARTED UNTIL BOTH ADJACENT #1 POURS REACH A MINIMUM OF 3000 PSI.

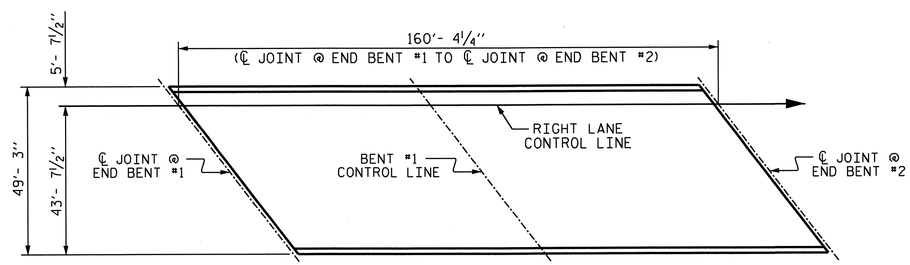

LAYOUT FOR COMPUTING AREA REINFORCED CONCRETE DECK SLAB
(SQ. FT. = 7,897)

SUPERSTRUCTURE BILL OF MATERIAL

	CLASS AA CONCRETE	REINFORCING STEEL	✱ EPOXY COATED REINFORCING STEEL
	(CU. YDS.)	(LBS.)	(LBS.)
POUR 1	125.2	18428	42551
POUR 2	155.0		
POUR 3	20.8		
TOTALS ✱✱	301.0	18428	42551

✱✱ QUANTITIES FOR CONCRETE BARRIER RAIL ARE NOT INCLUDED

SUPERSTRUCTURE REINFORCING STEEL LENGTHS ARE BASED ON THE FOLLOWING MINIMUM SPLICE LENGTHS

BAR SIZE	SUPERSTRUCTURE EXCEPT APPROACH SLABS, PARAPET, AND BARRIER RAIL		APPROACH SLABS		PARAPET AND BARRIER RAIL
	EPOXY COATED	UNCOATED	EPOXY COATED	UNCOATED	
#4	2'-0"	1'-9"	2'-0"	1'-9"	2'-9"
#5	2'-6"	2'-2"	2'-6"	2'-2"	3'-5"
#6	3'-0"	2'-7"	3'-10"	2'-7"	4'-4"
#7	5'-3"	3'-6"			
#8	6'-10"	4'-7"			

GROOVING BRIDGE FLOORS

APPROACH SLABS	2023	SQ.FT.
BRIDGE DECK	6835	SQ.FT.
TOTAL	8858	SQ.FT.

PROJECT NO. R-2707B
CLEVELAND COUNTY
STATION: 247+90.66 -L-

STATE OF NORTH CAROLINA
DEPARTMENT OF TRANSPORTATION
RALEIGH

SUPERSTRUCTURE BILL OF MATERIAL (RIGHT LANE)

NORTH CAROLINA PROFESSIONAL SEAL 15825 ENGINEER DAVID D. KLAPPENBACH 6-27-2013

REVISIONS						SHEET NO.
NO.	BY:	DATE:	NO.	BY:	DATE:	S-55
1			3			TOTAL SHEETS
2			4			266

DESIGN ENGINEER OF RECORD: S. T. CHAMPION DATE : 5-13-13
ASSEMBLED BY : D. A. GLADDEN DATE : 10-27-10
CHECKED BY : H. T. BARBOUR DATE : 1-5-12
DRAWN BY : JMB 5/87
CHECKED BY : SJD 9/87
REV. 6/1/94 EEM/GRP
REV. 8/16/99 RWW/LES
REV. 5/1/06 TLA/GM

STR. #2 STD. NO. BOM2

24-JUN-2013 12:47
R:\Structures\Plans\Bailey\STRland2\dgladden\Microstation\R2707B_SD_STR2.dgn
dgladden

NOTES

STIRRUPS IN CAP MAY BE SHIFTED AS NECESSARY TO CLEAR ANCHOR BOLTS.

BACKWALL SHALL BE PLACED BEFORE APPLYING THE EPOXY PROTECTIVE COATING.

THE TOP SURFACE OF THE END BENT CAP EXCEPT THE BRIDGE SEAT BUILDUPS SHALL BE SLOPED TRANSVERSELY FROM THE FILL FACE TO THE BACK FACE AT THE RATE OF 2%.

THE CONCRETE IN THE SHADED AREA OF THE WING SHALL BE POURED AFTER THE BARRIER RAIL IS CAST IF SLIP FORMING IS USED.

INSTALL THE 4"DIA. DRAIN PIPE THROUGH THE WING WALL AS REQUIRED FOR REINFORCED BRIDGE APPROACH FILLS. SEE THE ROADWAY PLANS. REINFORCING STEEL IN THE WING WALL MAY BE SHIFTED AS NECESSARY TO CLEAR THE DRAIN PIPE.

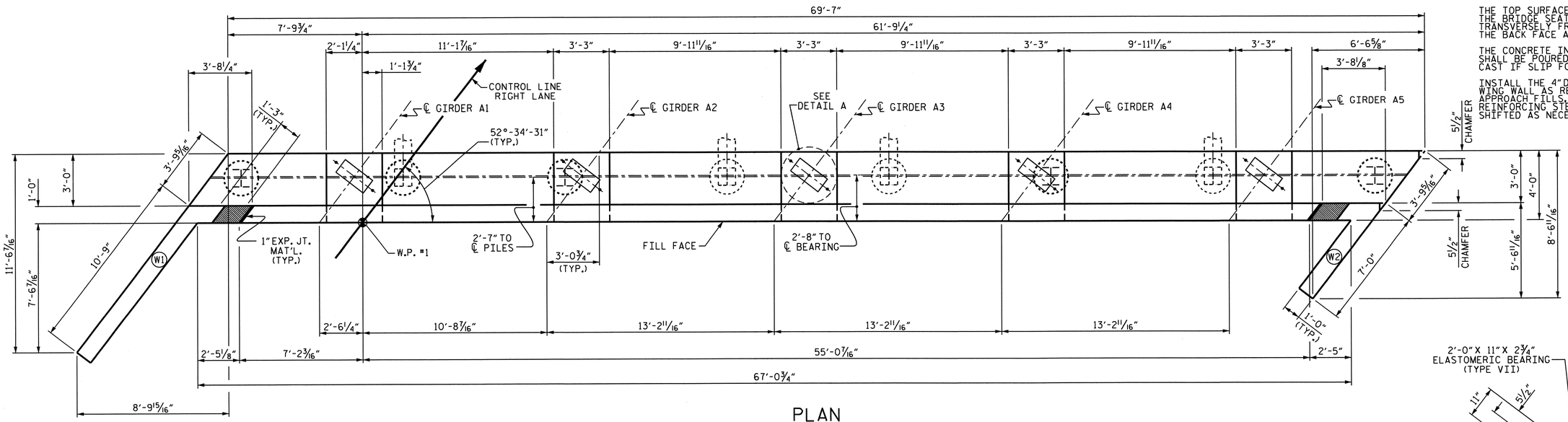

PLAN

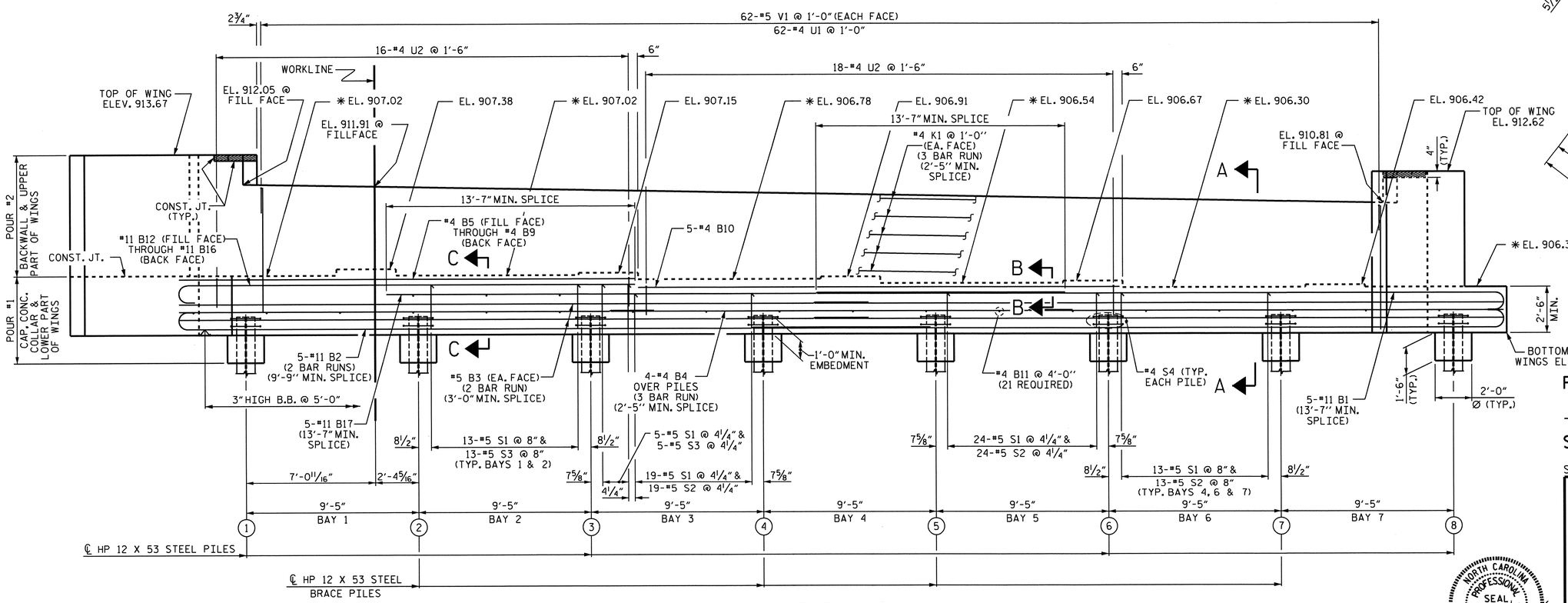

ELEVATION

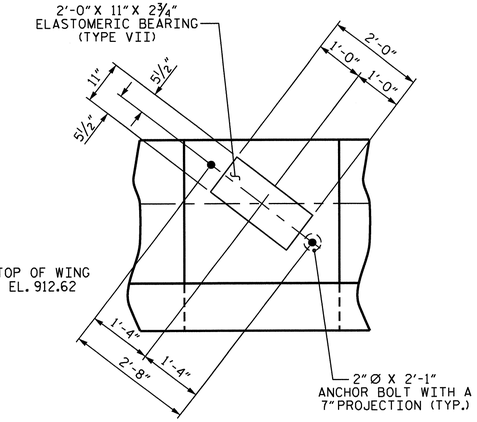

DETAIL A

(TYP. EACH GIRDER)

PROJECT NO. R-2707B

CLEVELAND COUNTY

STATION: 247+90.66-L-

SHEET 1 OF 3

STATE OF NORTH CAROLINA
DEPARTMENT OF TRANSPORTATION
RALEIGH

SUBSTRUCTURE END BENT #1 (RIGHT LANE)

NORTH CAROLINA PROFESSIONAL SEAL 15825 ENGINEER D. K. LAPPELBAUM
6-27-2013

REVISIONS						SHEET NO.
NO.	BY:	DATE:	NO.	BY:	DATE:	S-56
1			3			TOTAL SHEETS
2			4			266

DESIGN ENGINEER OF RECORD: S. T. CHAMPION DATE: 5-13

DRAWN BY: H. T. BARBOUR DATE: 5-22-12

CHECKED BY: D. A. GLADDEN DATE: 7-12

STR. #2

NCDDS

13-MAY-2013 16:25
K:\Structures\Plans\Bailey\STRland2\tbarbour\Microstation\str-2\R-2707B_SD_E*.dgn
tbarbour

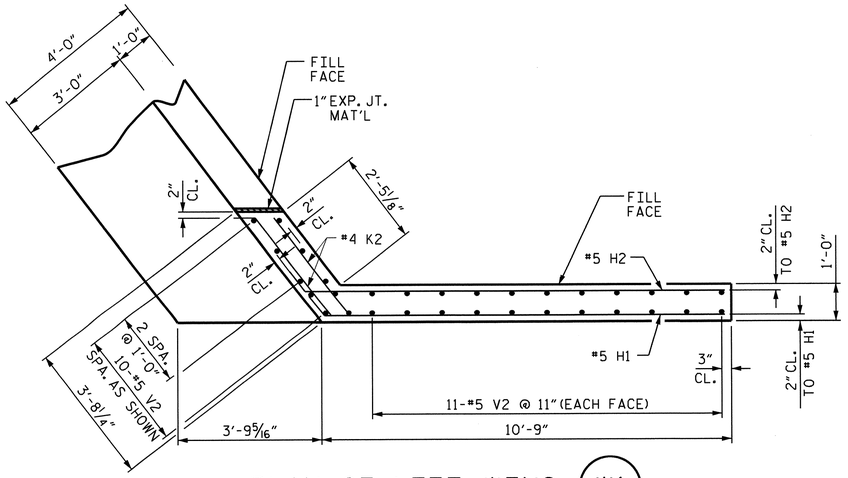

PLAN OF LEFT WING (W1)

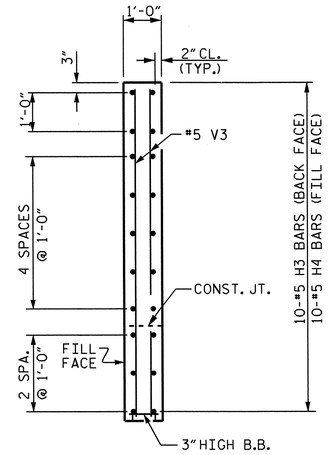

SECTION X-X

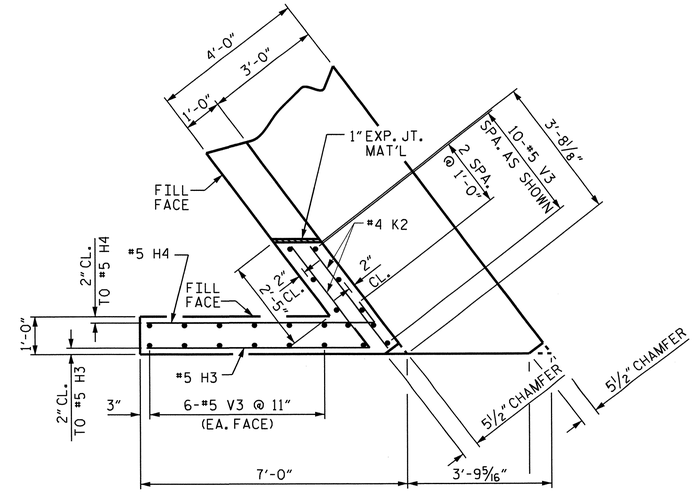

PLAN OF RIGHT WING (W2)

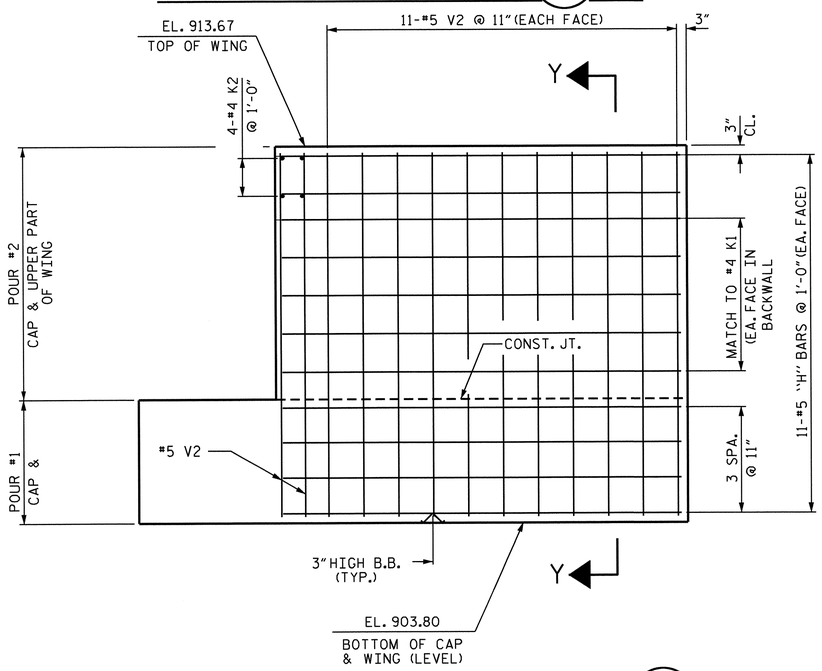

ELEVATION OF LEFT WING (W1)

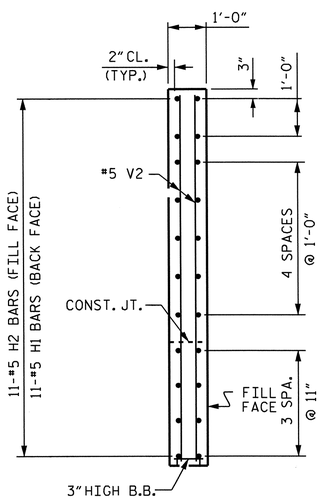

SECTION Y-Y

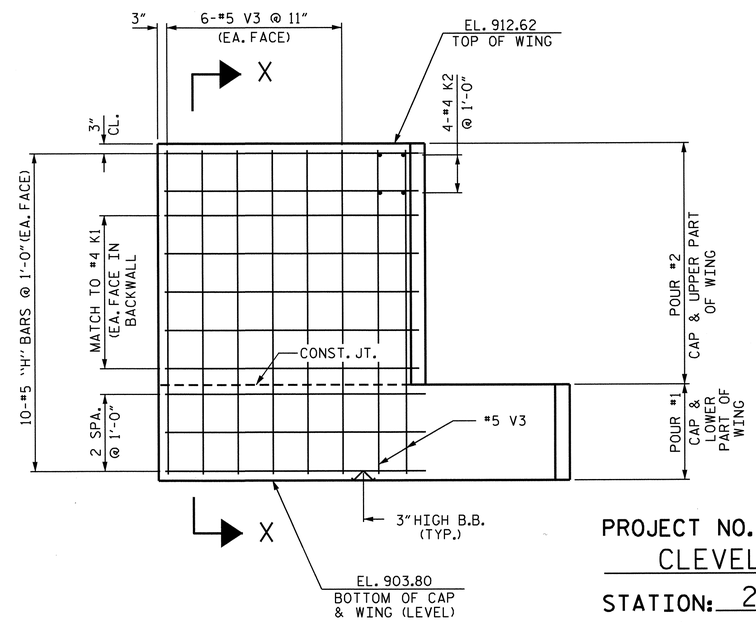

ELEVATION OF RIGHT WING (W2)

PROJECT NO. R-2707B
CLEVELAND COUNTY
STATION: 247+90.66-L-

SHEET 2 OF 3

STATE OF NORTH CAROLINA
DEPARTMENT OF TRANSPORTATION
RALEIGH

SUBSTRUCTURE END BENT #1 (RIGHT LANE)

NORTH CAROLINA PROFESSIONAL SEAL 15825 ENGINEER D. KLAPPERICH
6-27-2013

REVISIONS						SHEET NO.
NO.	BY:	DATE:	NO.	BY:	DATE:	S-57
1			3			TOTAL SHEETS
2			4			266

DESIGN ENGINEER OF RECORD: S. T. CHAMPION DATE: 5-13
DRAWN BY: H. T. BARBOUR DATE: 5-22-12
CHECKED BY: D. A. GLADDEN DATE: 7-12

13-MAY-2013 16:25
K:\Structures\Plans\Bailey\STRland2\tbarbour\Microstation\str-2\R-2707B_SD_E*.dgn
tbarbour

STR. #2

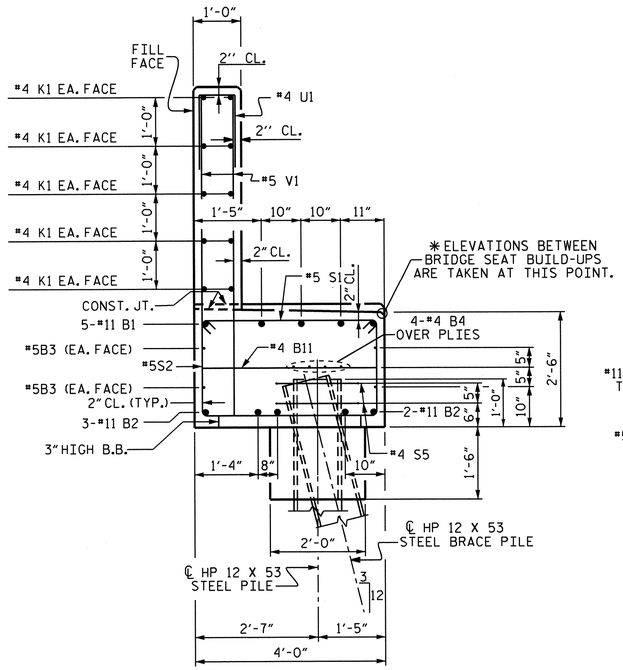

SECTION A-A

(SEE SHEET 1 OF 3)

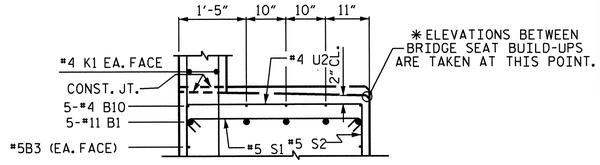

SECTION B-B

(SEE SHEET 1 OF 3)

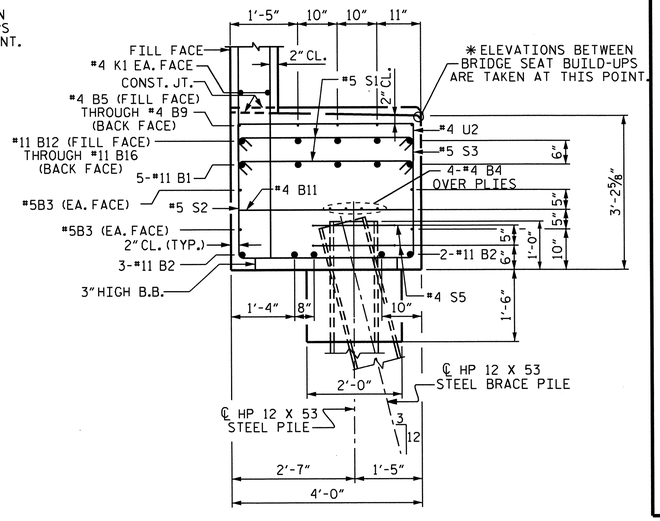

SECTION C-C

(SEE SHEET 1 OF 3)

BAR TYPES

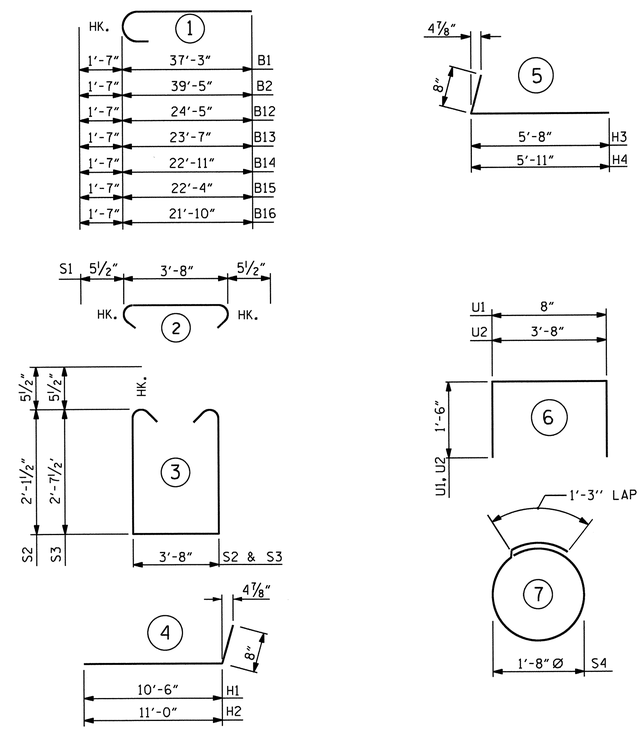

ALL BAR DIMENSIONS ARE OUT TO OUT.

BILL OF MATERIAL

END BENT #1

BAR	NO.	SIZE	TYPE	LENGTH	WEIGHT
B1	5	11	1	38'-10"	1032
B2	10	11	1	41'-0"	2178
B3	8	5	STR	36'-1"	301
B4	12	4	STR	24'-8"	198
B5	1	4	STR	24'-8"	16
B6	1	4	STR	23'-9"	16
B7	1	4	STR	23'-1"	15
B8	1	4	STR	22'-6"	15
B9	1	4	STR	21'-11"	15
B10	5	4	STR	27'-9"	93
B11	21	4	STR	3'-8"	51
B12	1	11	1	26'-0"	138
B13	1	11	1	25'-2"	134
B14	1	11	1	24'-6"	130
B15	1	11	1	23'-11"	127
B16	1	11	1	23'-5"	124
B17	5	11	STR	37'-3"	990
H1	11	5	4	11'-2"	128
H2	11	5	4	11'-8"	134
H3	10	5	5	6'-4"	66
H4	10	5	5	6'-7"	69
K1	30	4	STR	24'-8"	494
K2	8	4	STR	3'-3"	17
S1	113	5	2	4'-7"	540
S2	82	5	3	8'-10"	755
S3	31	5	3	9'-10"	318
S4	16	4	7	6'-6"	69
U1	62	4	6	3'-8"	152
U2	34	4	6	6'-8"	151
V1	124	5	STR	6'-9"	873
V2	32	5	STR	9'-6"	317
V3	22	5	STR	8'-5"	193
REINFORCING STEEL				LBS	9889

CLASS A CONCRETE BREAKDOWN

POUR #1
CAP, LOWER PART OF WINGS & CONCRETE COLLARS — 33.7 CU. YDS.

POUR #2
BACKWALL & UPPER PART OF WINGS — 15.9 CU. YDS.

CLASS A CONCRETE TOTAL — 49.6 CU. YDS.

HP 12 x 53 STEEL PILES
NO. 8 LIN. FT. 400

PILE REDRIVES — 8 EACH

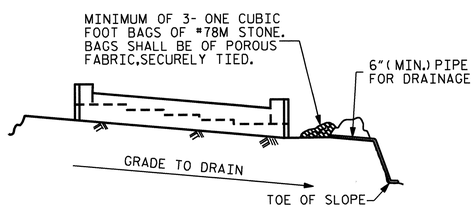

BAGGED STONE AND PIPE SHALL BE PLACED IMMEDIATELY AFTER COMPLETION OF END BENT EXCAVATION. PIPE MAY BE EITHER CONCRETE, CORRUGATED STEEL, CORRUGATED ALUMINUM ALLOY, OR CORRUGATED PLASTIC. PERFORATED PIPE WILL NOT BE ALLOWED.

BAGGED STONE SHALL REMAIN IN PLACE UNTIL THE ENGINEER DIRECTS THAT IT BE REMOVED. THE CONTRACTOR SHALL REMOVE AND DISPOSE OF SILT ACCUMULATIONS AT BAGGED STONE WHEN SO DIRECTED BY THE ENGINEER. BAGS SHALL BE REMOVED AND REPLACED WHENEVER THE ENGINEER DETERMINES THAT THEY HAVE DETERIORATED AND LOST THEIR EFFECTIVENESS.

NO SEPARATE PAYMENT WILL BE MADE FOR THIS WORK AND THE ENTIRE COST OF THIS WORK SHALL BE INCLUDED IN THE UNIT CONTRACT PRICE BID FOR THE SEVERAL PAY ITEMS.

TEMPORARY DRAINAGE AT END BENT

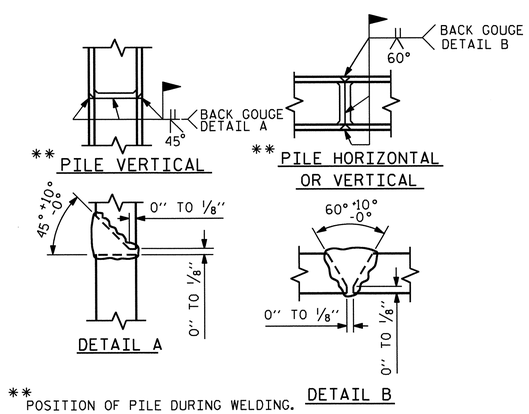

** POSITION OF PILE DURING WELDING.

PILE SPLICE DETAILS

PROJECT NO. R-2707B
CLEVELAND COUNTY
STATION: 247+90.66-L-

SHEET 3 OF 3

STATE OF NORTH CAROLINA
DEPARTMENT OF TRANSPORTATION
RALEIGH

SUBSTRUCTURE END BENT #1 (RIGHT LANE)

NORTH CAROLINA PROFESSIONAL SEAL 3825 ENGINEER BRUCE D. KLAPPENBACH
6-27-2013

REVISIONS						SHEET NO.
NO.	BY:	DATE:	NO.	BY:	DATE:	S-58
1			3			TOTAL SHEETS
2			4			266

DESIGN ENGINEER OF RECORD: S. T. CHAMPION DATE: 5-13
DRAWN BY: H. T. BARBOUR DATE: 4-25-12
CHECKED BY: D. A. GLADDEN DATE: 7-12

NOTES

STIRRUPS IN CAP MAY BE SHIFTED AS NECESSARY TO CLEAR ANCHOR BOLTS.

HOOKS ON "V" BARS MAY BE TURNED AS NECESSARY FOR PLACING REINFORCING STEEL.

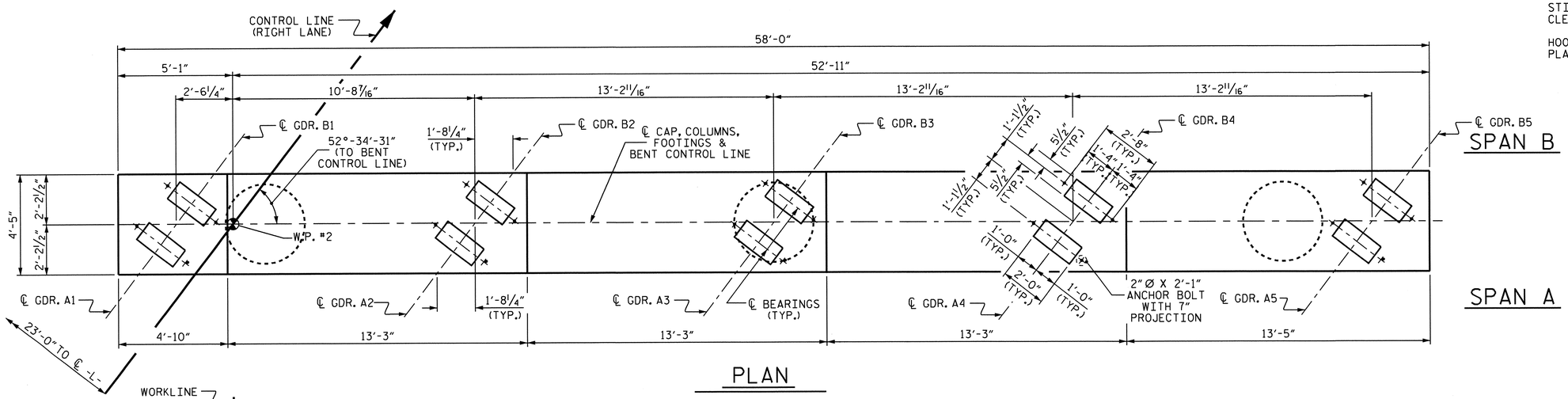

PLAN

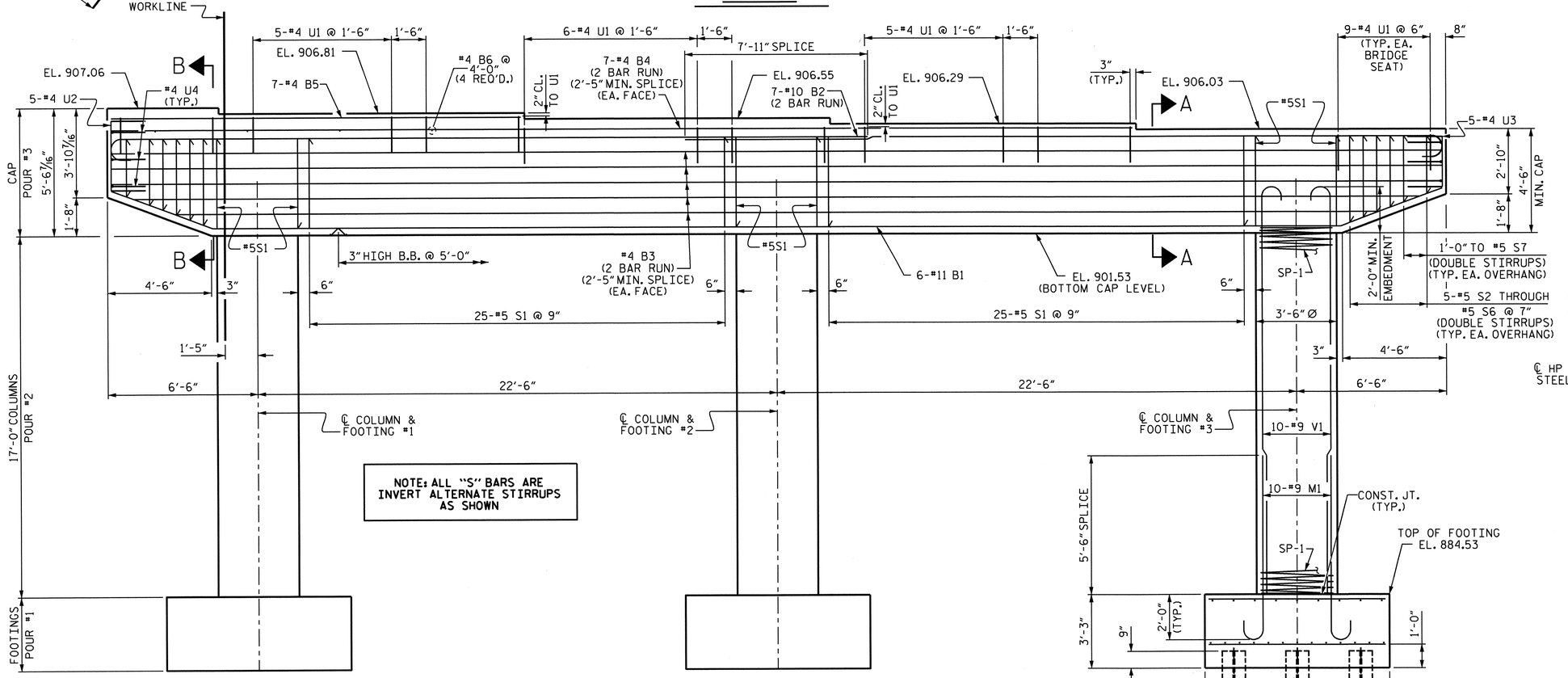

NOTE: ALL "S" BARS ARE INVERT ALTERNATE STIRRUPS AS SHOWN

ELEVATION

ALL COLUMNS AND FOOTINGS ARE IDENTICAL

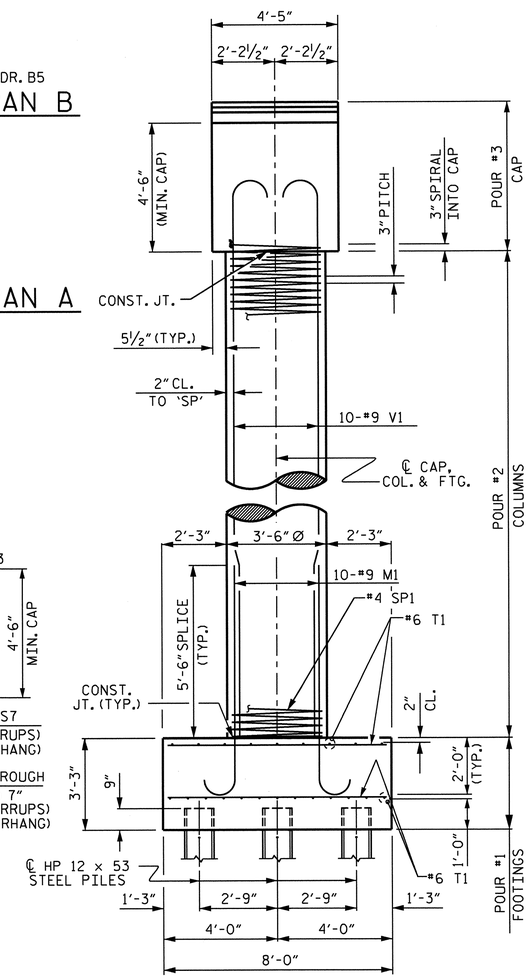

RIGHT END ELEVATION

PROJECT NO. R-2707B

CLEVELAND COUNTY

STATION: 247+90.66-L-

SHEET 1 OF 2

STATE OF NORTH CAROLINA
DEPARTMENT OF TRANSPORTATION
RALEIGH

SUBSTRUCTURE BENT #1 (RIGHT LANE)

NORTH CAROLINA PROFESSIONAL SEAL 15825 ENGINEER BRADLEY D. KLAPPENBACH
6-27-2013

REVISIONS								SHEET NO.
NO.	BY:	DATE:	NO.	BY:	DATE:			S-59
1			3					TOTAL SHEETS
2			4					266

DESIGN ENGINEER OF RECORD: S. T. CHAMPION DATE: 5-13

DRAWN BY: H. T. BARBOUR DATE: 10-21-11

CHECKED BY: D. A. GLADDEN DATE: 5-12

13-MAY-2013 16:26
K:\Structures\Plans\Bailey\STRland2\tbarbour\Microstation\str-2\R-2707B_SD_B*.dgn
tbarbour

STR. #2

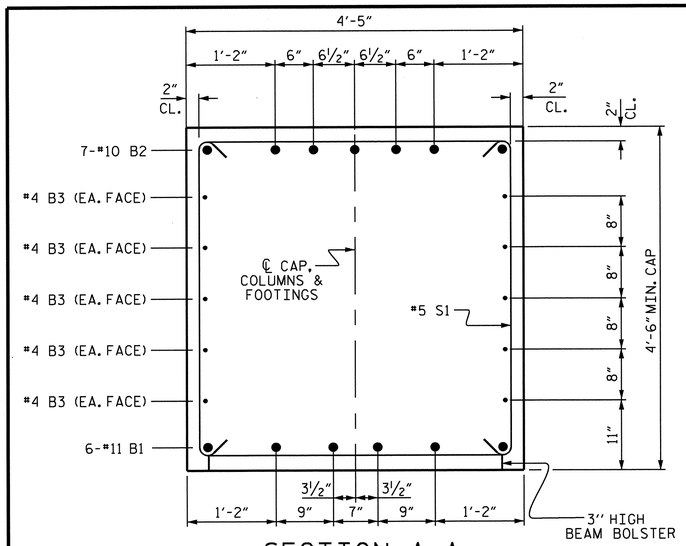

SECTION A-A

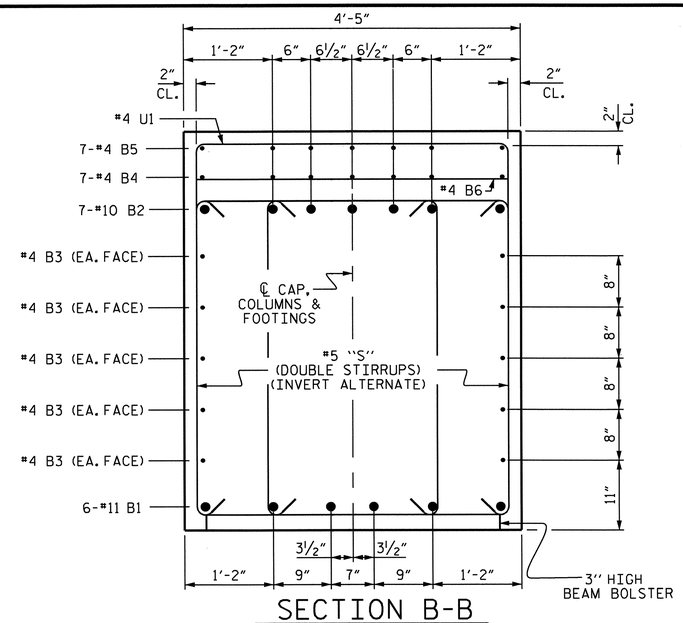

SECTION B-B

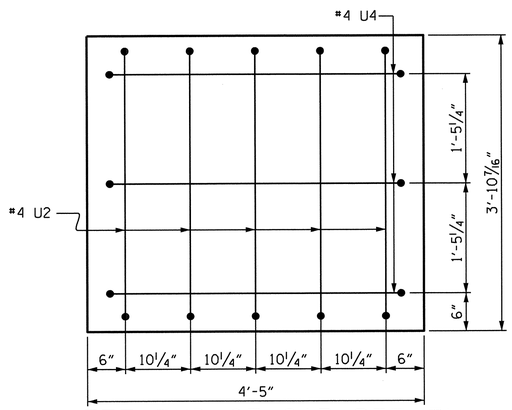

LEFT END OF CAP DETAIL

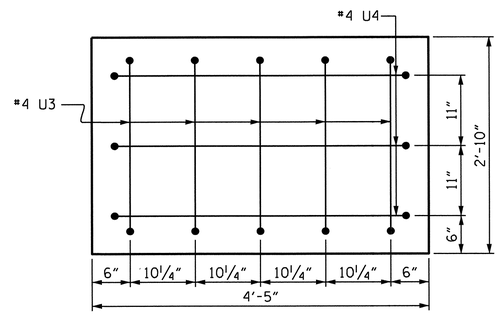

RIGHT END OF CAP DETAIL

BAR TYPES

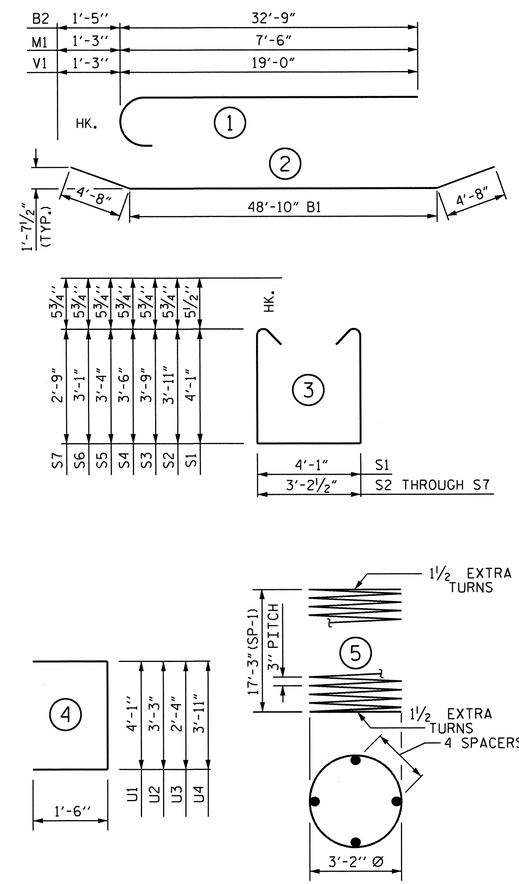

ALL BAR DIMENSIONS ARE OUT TO OUT.

BILL OF MATERIAL

BAR	NO.	SIZE	TYPE	LENGTH	WEIGHT
B1	6	#11	2	58'-2"	1854
B2	14	#10	1	34'-2"	2058
B3	20	#4	STR	30'-1"	402
B4	14	#4	STR	23'-4"	218
B5	7	#4	STR	17'-9"	83
B6	4	#4	STR	4'-1"	11
M1	30	#9	1	8'-9"	893
S1	56	#5	3	13'-2"	769
S2	4	#5	3	12'-0"	50
S3	4	#5	3	11'-8"	49
S4	4	#5	3	11'-2"	47
S5	4	#5	3	10'-10"	45
S6	4	#5	3	10'-4"	43
S7	4	#5	3	9'-8"	40
T1	144	#6	STR	7'-8"	1658
U1	61	#4	4	7'-1"	289
U2	5	#4	4	6'-3"	21
U3	5	#4	4	5'-4"	18
U4	6	#4	4	6'-11"	28
V1	30	#9	1	20'-3"	2066
REINFORCING STEEL				= 10642 LBS.	
SP-1	3	*	5	707'-0"	1417

SPIRAL COLUMN REINFORCING STEEL = 1417 LBS.

CLASS A CONCRETE BREAKDOWN

POUR #1 (FOOTINGS)	=	23.1 C.Y.
POUR #2 (COLUMN)	=	18.2 C.Y.
POUR #3 (CAP)	=	45.6 C.Y.
TOTAL	=	86.9 C.Y.

HP 12 x 53 STEEL PILES NO. 24 = LIN. FT. 1360

PILE REDRIVES 24 EACH

* THE SP-1 SPIRAL REINFORCING STEEL SHALL BE W20 OR D-20 COLD DRAWN WIRE OR #4 PLAIN OR DEFORMED BAR.

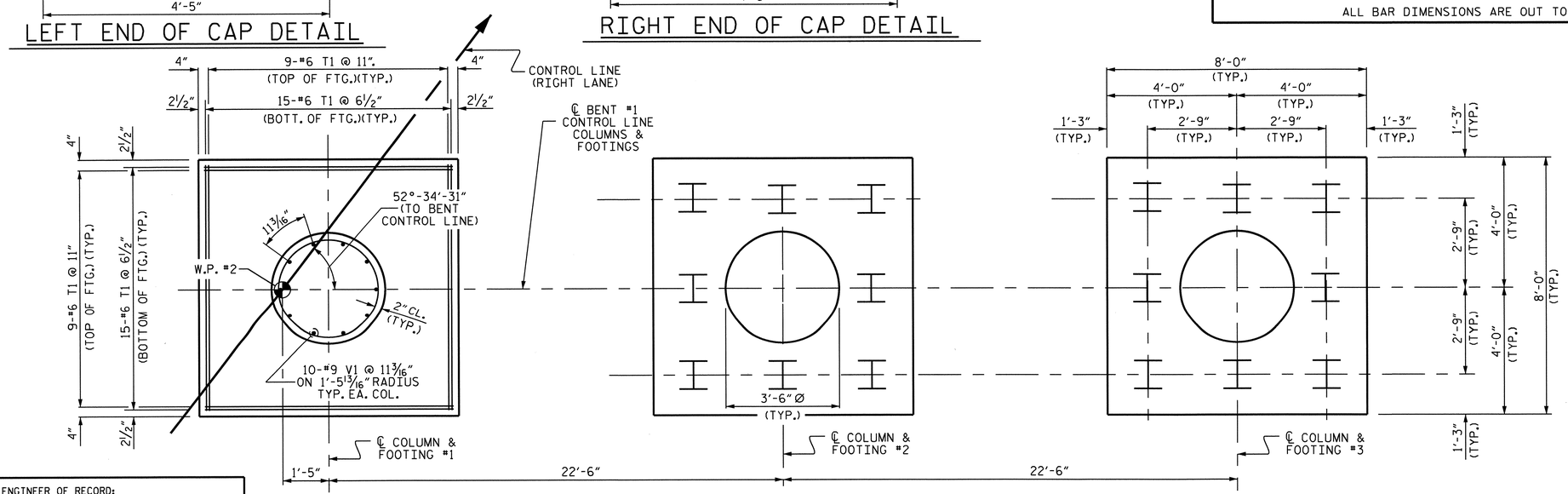

PLAN OF COLUMNS AND FOOTINGS

FOOTING DETAILS ARE TYPICAL

PROJECT NO. R-2707B
CLEVELAND COUNTY
STATION: 247+90.66-L-

SHEET 2 OF 2

STATE OF NORTH CAROLINA
DEPARTMENT OF TRANSPORTATION
RALEIGH

SUBSTRUCTURE
BENT #1
(RIGHT LANE)

NORTH CAROLINA PROFESSIONAL SEAL 15825 ENGINEER BRYCE D. KLAPPENBACH
6-27-2013

REVISIONS						SHEET NO.
NO.	BY:	DATE:	NO.	BY:	DATE:	S-60
1			3			TOTAL SHEETS
2			4			266

DESIGN ENGINEER OF RECORD: S. T. CHAMPION DATE: 5-13
DRAWN BY: H. T. BARBOUR DATE: 10-21-11
CHECKED BY: D. A. GLADDEN DATE: 5-12

13-MAY-2013 16:26
K:\Structures\Plans\Bailey\STRland2\tbarbour\Microstation\str-2\R-2707B_SD_B*.dgn
tbarbour

STR #2

NOTES

STIRRUPS IN CAP MAY BE SHIFTED AS NECESSARY TO CLEAR ANCHOR BOLTS.

BACKWALL SHALL BE PLACED BEFORE APPLYING THE EPOXY PROTECTIVE COATING.

THE TOP SURFACE OF THE END BENT CAP EXCEPT THE BRIDGE SEAT BUILDUPS SHALL BE SLOPED TRANSVERSELY FROM THE FILL FACE TO THE BACK FACE AT THE RATE OF 2%.

THE CONCRETE IN THE SHADED AREA OF THE WING SHALL BE POURED AFTER THE BARRIER RAIL IS CAST IF SLIP FORMING IS USED.

INSTALL THE 4"DIA. DRAIN PIPE THROUGH THE WING WALL AS REQUIRED FOR REINFORCED BRIDGE APPROACH FILLS. SEE THE ROADWAY PLANS. REINFORCING STEEL IN THE WING WALL MAY BE SHIFTED AS NECESSARY TO CLEAR THE DRAIN PIPE.

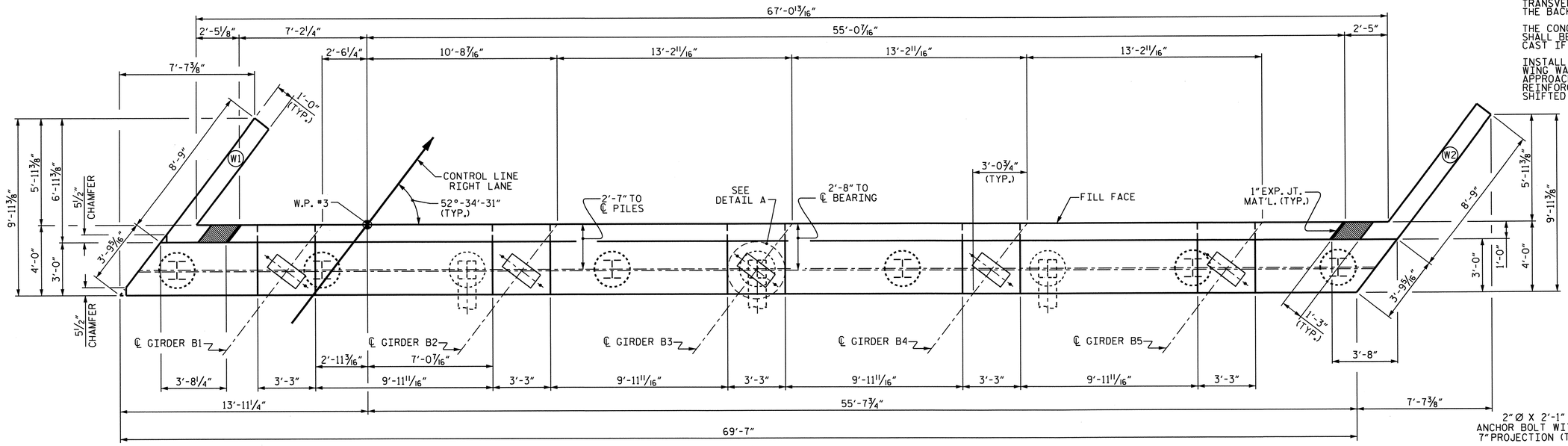

PLAN

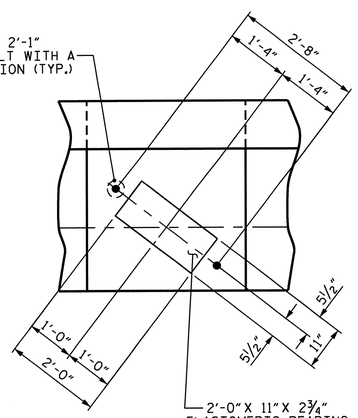

DETAIL A

(TYP. EACH GIRDER)

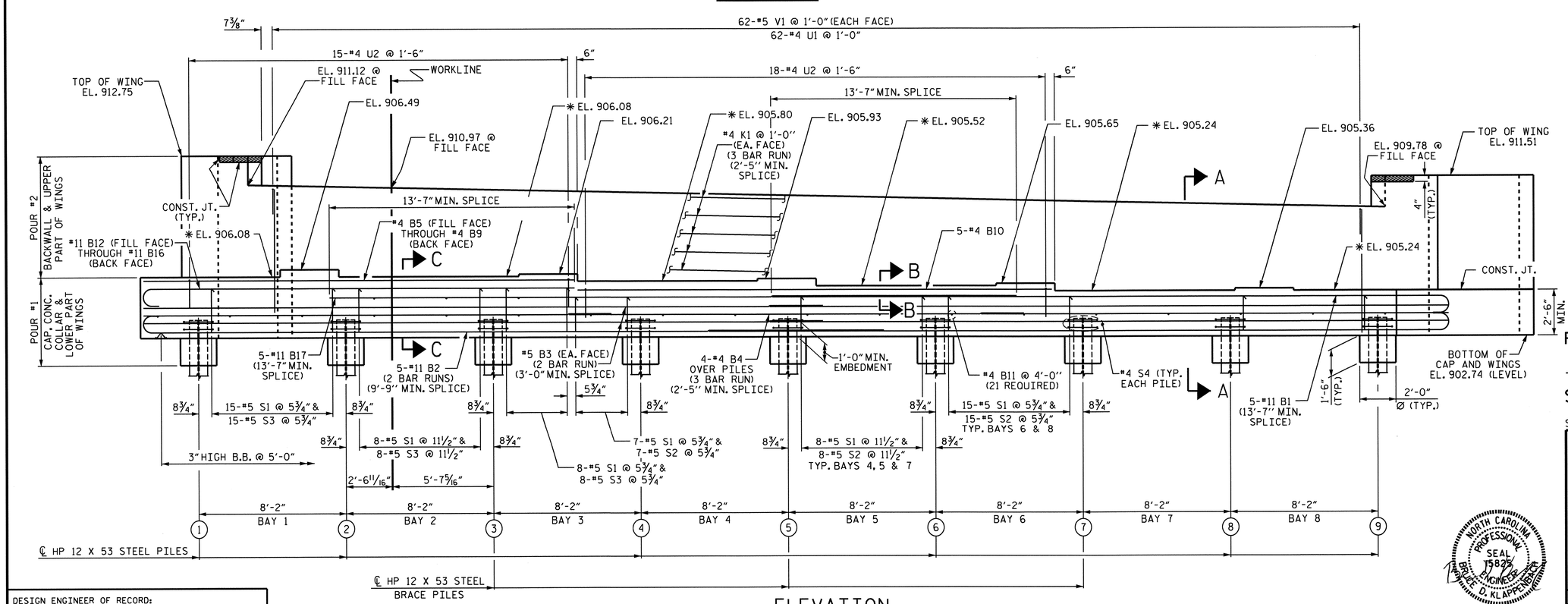

ELEVATION

PROJECT NO. R-2707B

CLEVELAND COUNTY

STATION: 247+90.66-L-

SHEET 1 OF 3

STATE OF NORTH CAROLINA
DEPARTMENT OF TRANSPORTATION
RALEIGH

SUBSTRUCTURE END BENT #2 RIGHT LANE

NORTH CAROLINA PROFESSIONAL SEAL 15823 ENGINEER BRUCE C. KLAPPENBACH
6-27-2013

DESIGN ENGINEER OF RECORD: S. T. CHAMPION	DATE: 5-13
DRAWN BY: H. T. BARBOUR	DATE: 5-31-12
CHECKED BY: D. A. GLADDEN	DATE: 7-12

REVISIONS						SHEET NO.
NO.	BY:	DATE:	NO.	BY:	DATE:	S-61
1			3			TOTAL SHEETS
2			4			266

STR. #2 NCDDS

24-JUN-2013 08:38
K:\Structures\Plans\Bailey\STRland2\tbarbour\Microstation\str-2\R-2707B_SD_E*.dgn
tbarbour

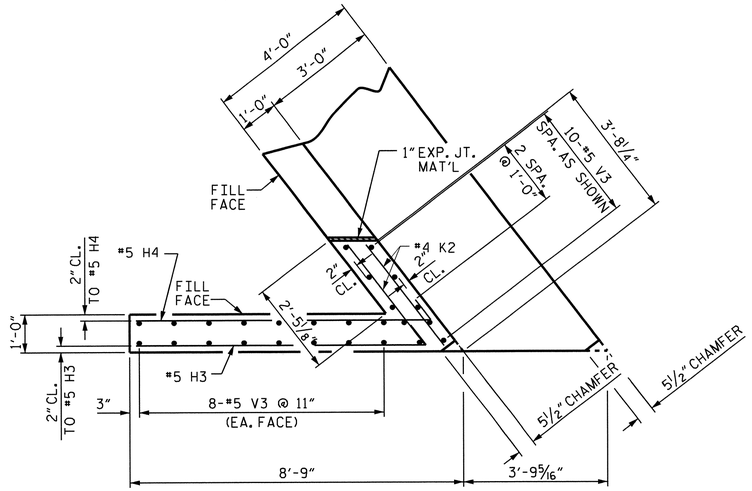

PLAN OF LEFT WING (W1)

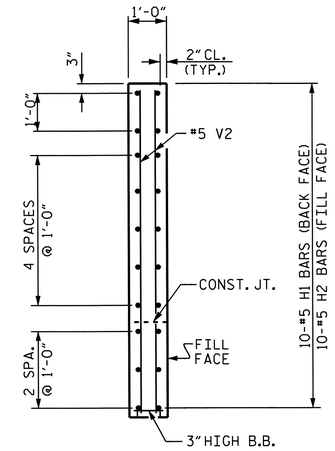

SECTION X-X

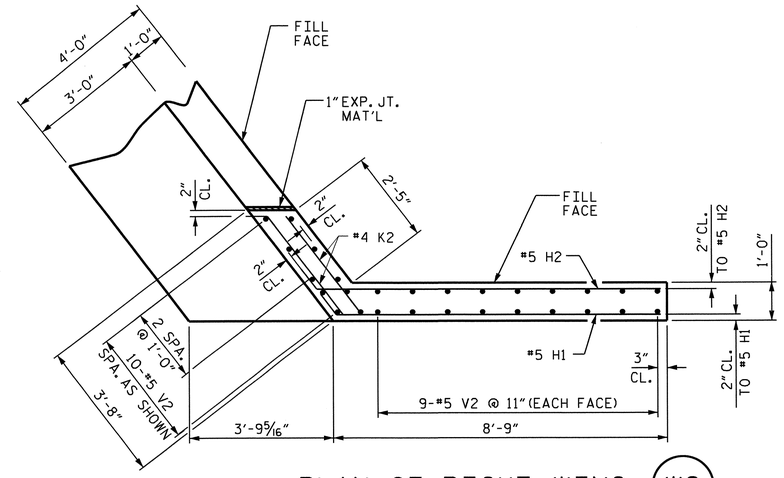

PLAN OF RIGHT WING (W2)

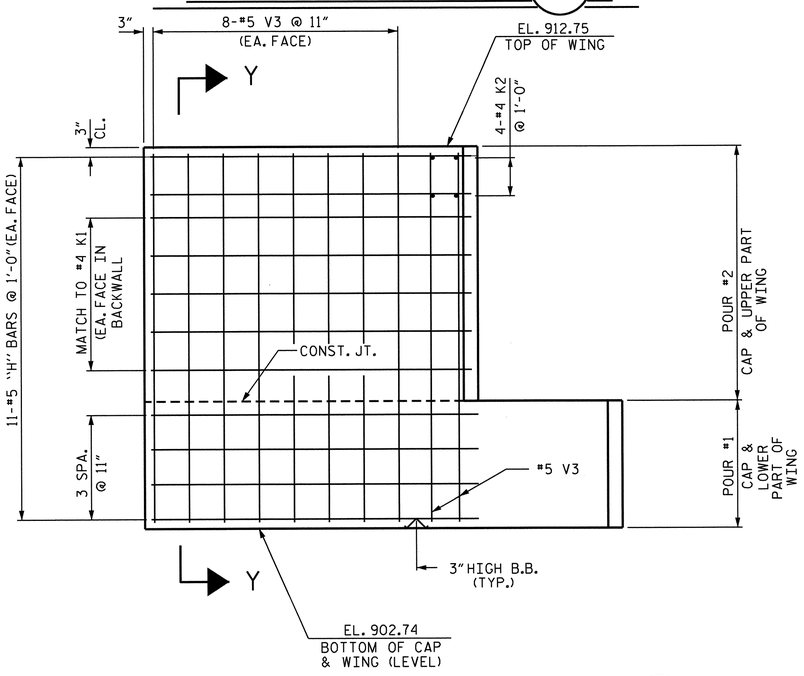

ELEVATION OF LEFT WING (W1)

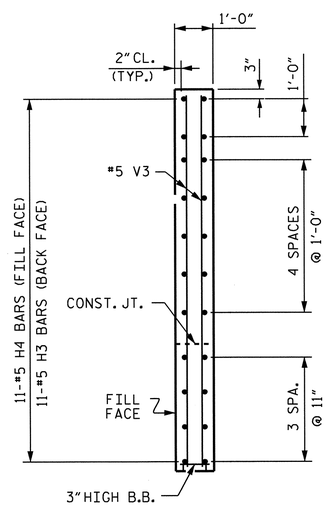

SECTION Y-Y

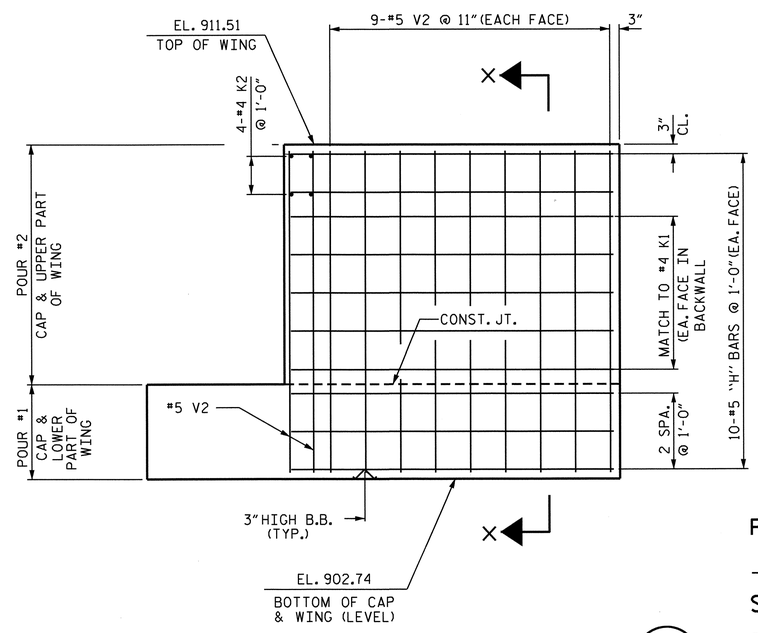

ELEVATION OF RIGHT WING (W2)

PROJECT NO. R-2707B

CLEVELAND COUNTY

STATION: 247+90.66-L-

SHEET 2 OF 3

STATE OF NORTH CAROLINA
DEPARTMENT OF TRANSPORTATION
RALEIGH

SUBSTRUCTURE END BENT #2 (RIGHT LANE)

NORTH CAROLINA PROFESSIONAL SEAL 15825 ENGINEER BRUCE D. KLAPPENBERG
6-27-2013

REVISIONS							SHEET NO.
NO.	BY:	DATE:	NO.	BY:	DATE:		S-62
1			3				TOTAL SHEETS
2			4				266

DESIGN ENGINEER OF RECORD: S. T. CHAMPION DATE: 5-13

DRAWN BY: H. T. BARBOUR DATE: 5-31-12

CHECKED BY: D. A. GLADDEN DATE: 7-12

13-MAY-2013 16:25
K:\Structures\Plans\Bailey\STRland2\tbarbour\Microstation\str-2\R-2707B_SD_E*.dgn
tbarbour

STR. #2

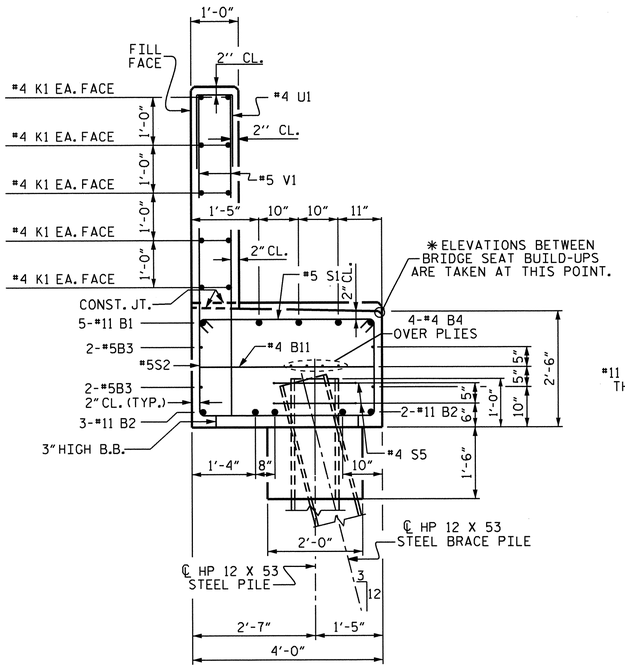

SECTION A-A

(SEE SHEET 1 OF 3)

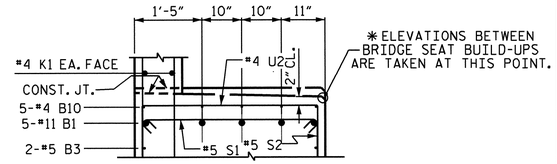

SECTION B-B

(SEE SHEET 1 OF 3)

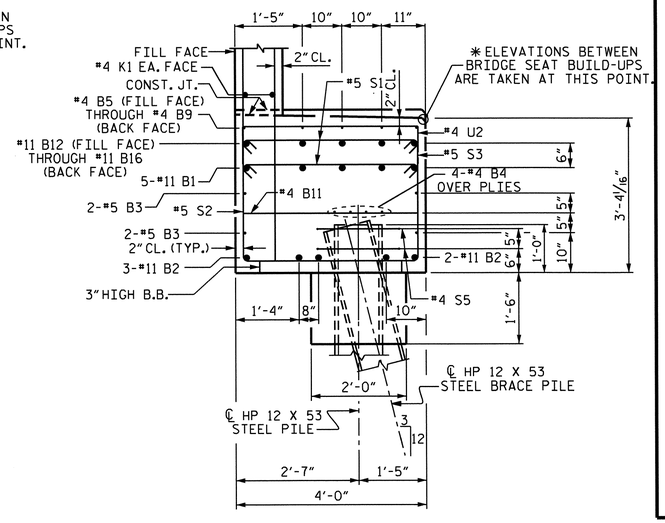

SECTION C-C

(SEE SHEET 1 OF 3)

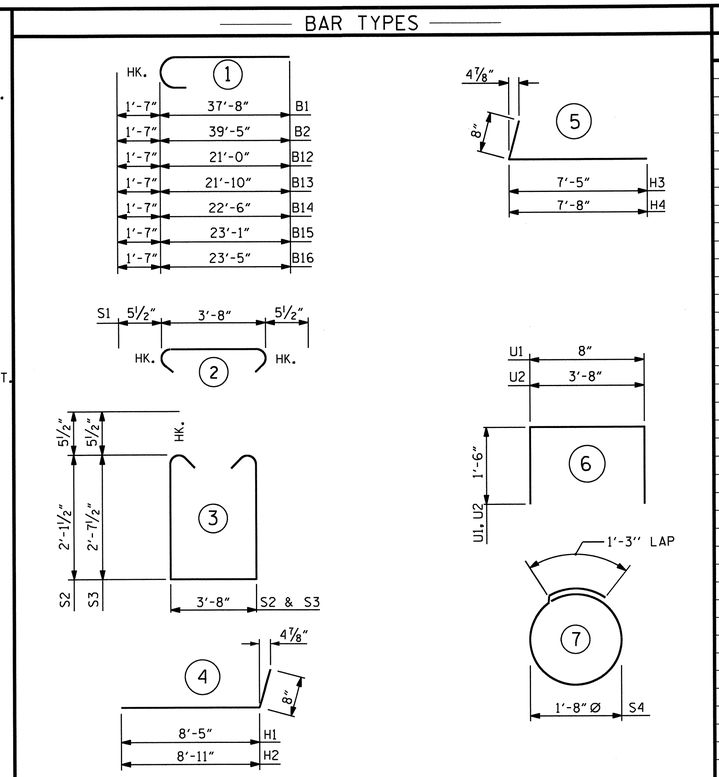

ALL BAR DIMENSIONS ARE OUT TO OUT.

BILL OF MATERIAL

END BENT #2

BAR	NO.	SIZE	TYPE	LENGTH	WEIGHT
B1	5	11	1	39'-3"	1043
B2	10	11	1	41'-0"	2178
B3	8	5	STR	36'-1"	301
B4	12	4	STR	24'-8"	198
B5	1	4	STR	20'-11"	14
B6	1	4	STR	21'-10"	15
B7	1	4	STR	22'-5"	15
B8	1	4	STR	23'-1"	15
B9	1	4	STR	23'-6"	16
B10	5	4	STR	26'-3"	88
B11	21	4	STR	3'-8"	51
B12	1	11	1	22'-7"	120
B13	1	11	1	23'-5"	124
B14	1	11	1	24'-1"	128
B15	1	11	1	24'-8"	131
B16	1	11	1	25'-0"	133
B17	5	11	STR	37'-8"	1001
H1	10	5	4	9'-1"	95
H2	10	5	4	9'-7"	100
H3	11	5	5	8'-1"	93
H4	11	5	5	8'-4"	96
K1	30	4	STR	24'-8"	494
K2	8	4	STR	3'-3"	17
S1	92	5	2	4'-7"	440
S2	61	5	3	8'-10"	562
S3	31	5	3	9'-10"	318
S4	18	4	7	6'-6"	78
U1	62	4	6	3'-8"	151
U2	33	4	6	6'-8"	147
V1	124	5	STR	6'-9"	873
V2	28	5	STR	8'-5"	246
V3	26	5	STR	9'-8"	262
REINFORCING STEEL				LBS	9543

CLASS A CONCRETE BREAKDOWN

POUR #1
CAP, LOWER PART OF WINGS & CONCRETE COLLARS — 34.4 CU. YDS.

POUR #2
BACKWALL & UPPER PART OF WINGS — 16.5 CU. YDS.

CLASS A CONCRETE TOTAL — 50.9 CU. YDS.

HP 12 x 53 STEEL PILES
NO. 9 LIN. FT. 390

PILE REDRIVES — 9 EACH

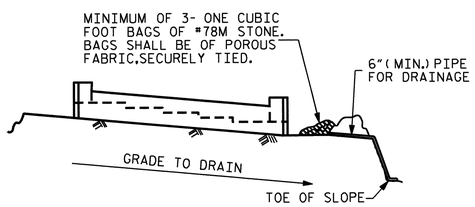

BAGGED STONE AND PIPE SHALL BE PLACED IMMEDIATELY AFTER COMPLETION OF END BENT EXCAVATION. PIPE MAY BE EITHER CONCRETE, CORRUGATED STEEL, CORRUGATED ALUMINUM ALLOY, OR CORRUGATED PLASTIC. PERFORATED PIPE WILL NOT BE ALLOWED.

BAGGED STONE SHALL REMAIN IN PLACE UNTIL THE ENGINEER DIRECTS THAT IT BE REMOVED. THE CONTRACTOR SHALL REMOVE AND DISPOSE OF SILT ACCUMULATIONS AT BAGGED STONE WHEN SO DIRECTED BY THE ENGINEER. BAGS SHALL BE REMOVED AND REPLACED WHENEVER THE ENGINEER DETERMINES THAT THEY HAVE DETERIORATED AND LOST THEIR EFFECTIVENESS.

NO SEPARATE PAYMENT WILL BE MADE FOR THIS WORK AND THE ENTIRE COST OF THIS WORK SHALL BE INCLUDED IN THE UNIT CONTRACT PRICE BID FOR THE SEVERAL PAY ITEMS.

TEMPORARY DRAINAGE AT END BENT

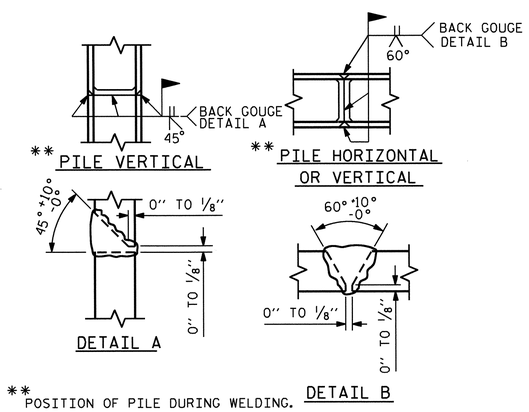

** POSITION OF PILE DURING WELDING.

PILE SPLICE DETAILS

PROJECT NO. R-2707B
CLEVELAND COUNTY
STATION: 247+90.66-L-

SHEET 3 OF 3

STATE OF NORTH CAROLINA
DEPARTMENT OF TRANSPORTATION
RALEIGH

SUBSTRUCTURE END BENT #2 (RIGHT LANE)

NORTH CAROLINA PROFESSIONAL SEAL 15826 ENGINEER BRUCE D. KLAPPENBACH
6-27-2012

REVISIONS						SHEET NO.
NO.	BY:	DATE:	NO.	BY:	DATE:	S-63
1			3			TOTAL SHEETS
2			4			266

DESIGN ENGINEER OF RECORD: S. T. CHAMPION DATE: 5-13

DRAWN BY: H. T. BARBOUR DATE: 6-1-12
CHECKED BY: D. A. GLADDEN DATE: 7-12

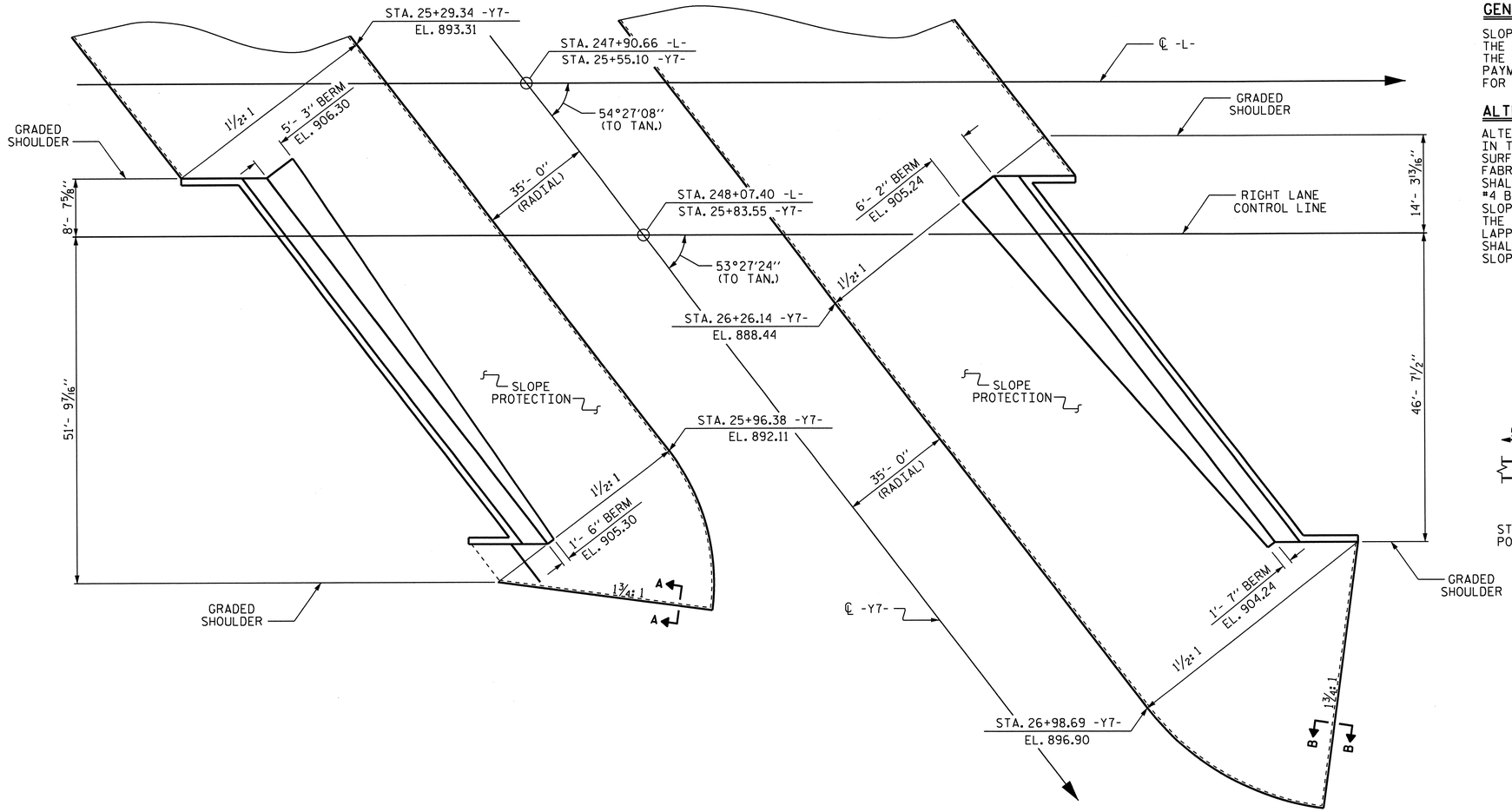

GENERAL NOTES

SLOPE PROTECTION SHALL BE PLACED UNDER THE ENDS OF THE BRIDGE AS SHOWN IN THE DETAILS. STRAIGHT EDGING WILL NOT BE REQUIRED UNLESS, IN THE OPINION OF THE ENGINEER, VISUAL INSPECTION INDICATES A NEED FOR IT. MEASUREMENT AND PAYMENT SHALL BE AS PRESCRIBED IN SECTION 462 OF THE STANDARD SPECIFICATIONS. FOR BERM WIDTH, SEE GENERAL DRAWING.

ALTERNATE "A"

ALTERNATE "A" SHALL CONSIST OF 4" POURED-IN-PLACE CONCRETE PAVING AS SHOWN IN THE DETAILS ON THIS SHEET. CONCRETE SHALL BE CLASS "B". THE CONCRETE SURFACE SHALL BE FLOATED WITH A WOODEN FLOAT AND FINISHED. WELDED WIRE FABRIC REINFORCING SHALL BE 6 X 6 - W1.4 X W1.4, 60" WIDE. SLOPE PROTECTION SHALL BE POURED IN 5' STRIPS AS SHOWN IN THE "POURING DETAIL" WITH 2'-0" LONG #4 BARS PLACED ALONG THE SLOPE BETWEEN STRIPS AT 1'-6" MAXIMUM SPACING. SLOPE PROTECTION MAY BE POURED IN ALTERNATE 4' AND 5' STRIPS AS SHOWN IN THE "OPTIONAL POURING DETAIL" WITH ADJACENT RUNS OF WELDED WIRE FABRIC LAPPING AT LEAST 6". THE COST OF THE WELDED WIRE FABRIC AND #4 BARS, IF USED, SHALL BE INCLUDED IN THE CONTRACT UNIT PRICE BID PER SQUARE YARD FOR SLOPE PROTECTION.

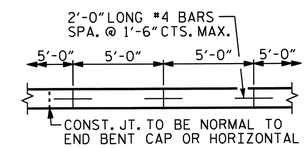

STRIP WIDTHS MAY VARY IN CURVED PORTION.

POURING DETAIL

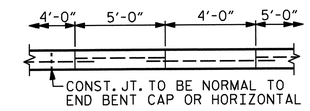

POUR A 4'-0" STRIP FIRST. STRIP WIDTHS MAY VARY IN CURVED PORTION.

OPTIONAL POURING DETAIL

BRIDGE @ STA. 247+90.66 -L- (RIGHT LANE)	4" INCH SLOPE PROTECTION	* WELDED WIRE FABRIC 60 INCHES WIDE
	SQUARE YARDS	APPROX. L.F.
END BENT 1	452	944
END BENT 2	451	906

* QUANTITY SHOWN IS BASED ON 5' POURS.

PLAN AT END BENT #1

(1 ½: 1 SLOPE)

PLAN AT END BENT #2

(1 ½: 1 SLOPE)

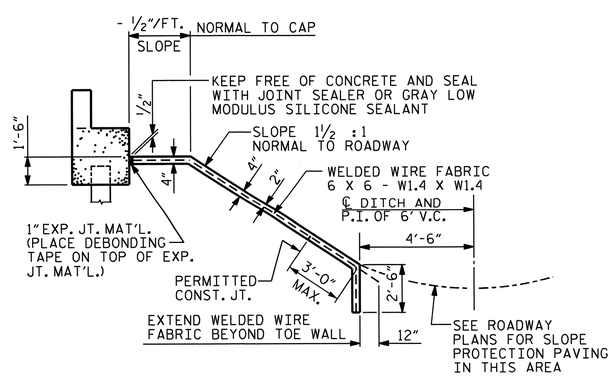

SECTION ALONG ℄ ROADWAY WHEN FILL CATCHES IN DITCH

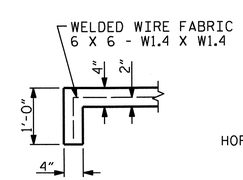

SECTION A-A

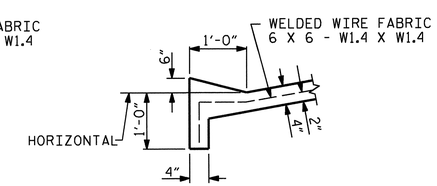

SECTION B-B

PROJECT NO. R-2707B

CLEVELAND COUNTY

STATION: 247+90.66 -L-

STATE OF NORTH CAROLINA
DEPARTMENT OF TRANSPORTATION
RALEIGH

STANDARD

SLOPE PROTECTION DETAILS RIGHT LANE

REVISIONS						SHEET NO.
NO.	BY:	DATE:	NO.	BY:	DATE:	S-64
1			3			TOTAL SHEETS
2			4			266

STD. NO. SP2

DESIGN ENGINEER OF RECORD: - DATE : -			
ASSEMBLED BY : D. A. GLADDEN DATE : 8-7-12			
CHECKED BY : B. DUKE DATE : 10-4-12			
DRAWN BY : WJH 10/88	REV. 7/17/98	REK/RWW	
CHECKED BY : FCJ 10/88	REV. 5/1/06	TLA/GM	
	REV. 10/1/11	MAA/GM	

25-JUN-2013 14:32
R:\Structures\Plans\Bailey\STRland2\dgladden\Microstation\B4821_SD_SP.dgn
dgladden

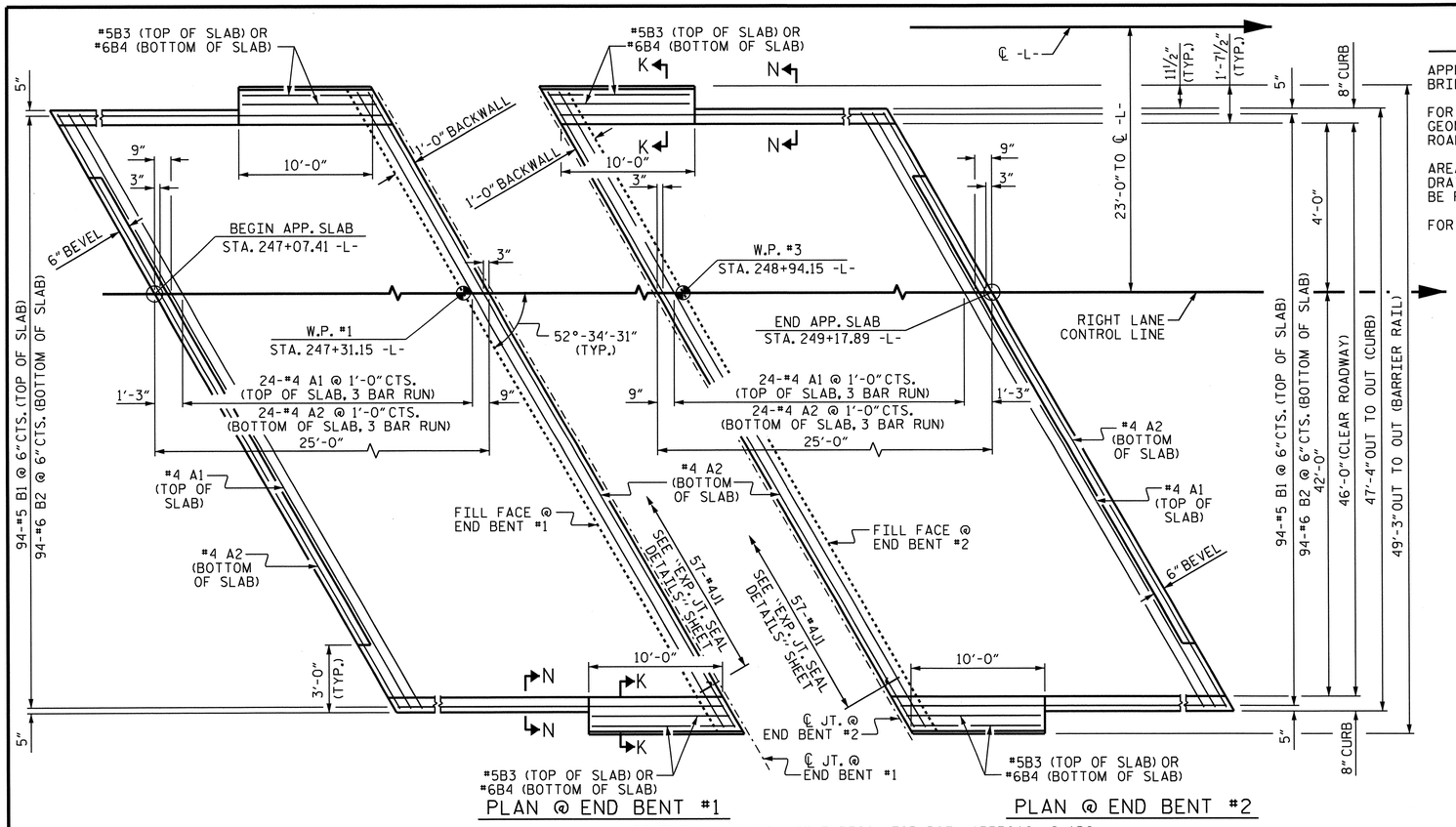

PLAN @ END BENT #1

PLAN @ END BENT #2

DIMENSIONS SHOWN ARE TYPICAL FOR BOTH APPROACH SLABS

NOTES

APPROACH SLAB SHALL NOT BE CONSTRUCTED PRIOR TO COMPLETION OF THE BRIDGE DECK.

FOR REINFORCED BRIDGE APPROACH FILL INCLUDING GEOTEXTILE, IMPERMEABLE GEOMEMBRANE, 4" Ø DRAINAGE PIPE, #78M STONE, AND SELECT MATERIAL. SEE ROADWAY PLANS.

AREA BETWEEN THE WINGWALL AND APPROACH SLAB SHALL BE GRADED TO DRAIN THE WATER AWAY FROM THE FILL FACE OF THE BRIDGE AND SHALL BE PAVED. SEE ROADWAY PLANS.

FOR EXPANSION JOINT SEALS, SEE SPECIAL PROVISIONS.

BILL OF MATERIAL

APPROACH SLAB AT EB #1

BAR	NO.	SIZE	TYPE	LENGTH	WEIGHT
✱A1	75	#4	STR	21'-11"	1098
A2	78	#4	STR	21'-9"	1133
✱B1	94	#5	STR	24'-1"	2361
B2	94	#6	STR	24'-7"	3471
✱B3	4	#5	STR	9'-9"	41
B4	4	#6	STR	9'-9"	59
✱J1	57	#4	1	1'-5"	54
REINFORCING STEEL ✱✱				LBS.	4663
✱EPOXY COATED REINFORCING STEEL ✱✱				LBS.	3554
CLASS AA CONCRETE ✱✱				C. Y.	51.0

APPROACH SLAB AT EB #2

BAR	NO.	SIZE	TYPE	LENGTH	WEIGHT
✱A1	75	#4	STR	21'-11"	1098
A2	78	#4	STR	21'-9"	1133
✱B1	94	#5	STR	24'-1"	2361
B2	94	#6	STR	24'-7"	3471
✱B3	4	#5	STR	9'-9"	41
B4	4	#6	STR	9'-9"	59
✱J1	57	#4	1	1'-5"	54
REINFORCING STEEL ✱✱				LBS.	4663
✱EPOXY COATED REINFORCING STEEL ✱✱				LBS.	3554
CLASS AA CONCRETE ✱✱				C. Y.	51.0

BAR TYPE

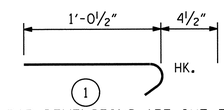

ALL BAR DIMENSIONS ARE OUT TO OUT

✱✱ QUANTITIES FOR BARRIER RAIL ARE NOT INCLUDED. SEE SHEET 2 OF 2.

THE QUANTITY OF #4 J1 BARS ON THE BILL OF MATERIAL IS BASED ON 1'-0" CENTERS. J1 BARS SHALL BE PLACED AT EACH VERTICAL STUD ANCHOR BOLT. IN THE EVENT THAT THE NUMBER OF VERTICAL STUD ANCHORS EXCEEDS THE NUMBER OF J1 BARS SPECIFIED, ADDITIONAL J1 BARS WILL NOT BE REQUIRED.

SPLICE LENGTHS

BAR SIZE	EPOXY COATED	UNCOATED
#4	2'-0"	1'-9"
#5	2'-6"	2'-2"
#6	3'-10"	2'-7"

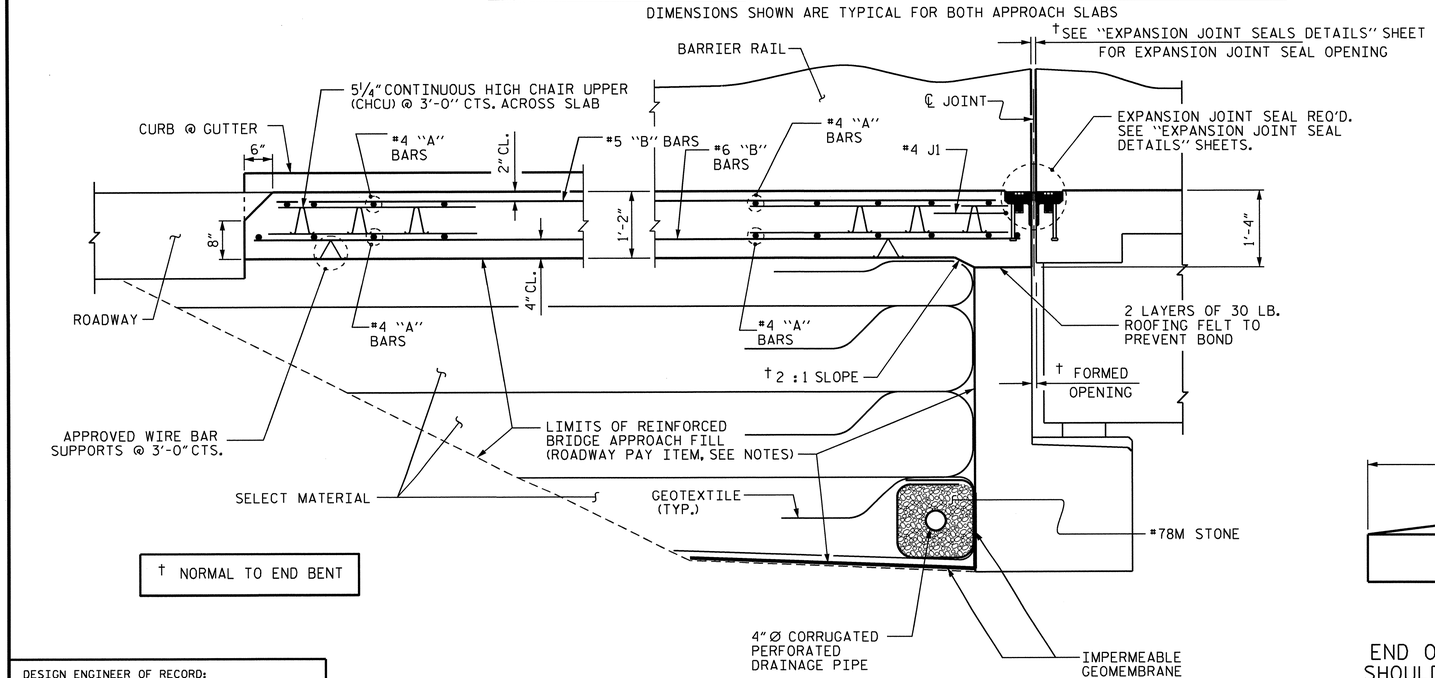

† NORMAL TO END BENT

SECTION THRU SLAB

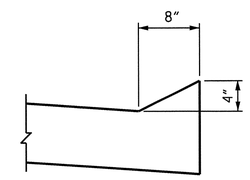

SECTION N-N

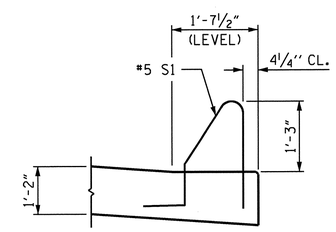

SECTION K-K

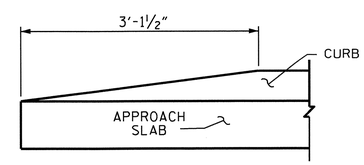

END OF CURB WITHOUT SHOULDER BERM GUTTER

CURB DETAILS

PROJECT NO. R-2707B

CLEVELAND COUNTY

STATION: 247+90.66 -L-

SHEET 1 OF 2

STATE OF NORTH CAROLINA
DEPARTMENT OF TRANSPORTATION
RALEIGH

BRIDGE APPROACH SLAB FOR FLEXIBLE PAVEMENT (RIGHT LANE)

REVISIONS						SHEET NO.
NO.	BY:	DATE:	NO.	BY:	DATE:	S-65
1			3			TOTAL SHEETS
2			4			266

DESIGN ENGINEER OF RECORD: S. T. CHAMPION		DATE : 5-13	
ASSEMBLED BY : H. T. BARBOUR		DATE : 6-4-12	
CHECKED BY : B. A. DUKE		DATE : 6-12	
DRAWN BY : EEM 3/95	REV. 5/7/03R	RWW/JTE	
CHECKED BY : VAP 3/95	REV. 5/1/06RR	KMM/GM	
	REV. 10/1/11	MAA/GM	

24-JUN-2013 08:43
K:\Structures\Plans\Bailey\STRland2\tbarbour\Microstation\str-2\R-2707B_SD_AS.dgn
tbarbour

STR #2

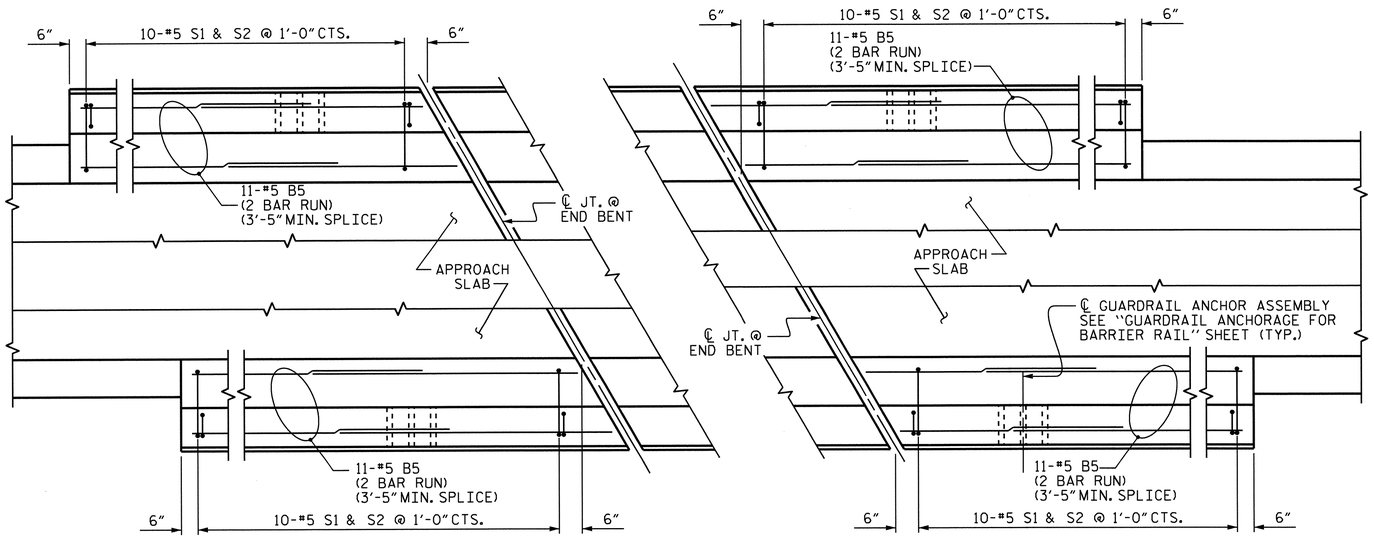

PLAN OF BARRIER RAIL

NOTES

THE COST OF THE BARRIER RAIL ON THE APPROACH SLAB SHALL BE INCLUDED IN THE LINEAR FOOT CONTRACT PRICE BID FOR "CONCRETE BARRIER RAIL".

THE BARRIER RAIL ON EACH APPROACH SLAB SHALL NOT BE CAST UNTIL ALL APPROACH SLAB CONCRETE HAS BEEN CAST AND HAS REACHED A MINIMUM COMPRESSIVE STRENGTH OF 3,000 PSI.

ALL REINFORCING STEEL IN BARRIER RAILS SHALL BE EPOXY COATED.

BAR TYPES

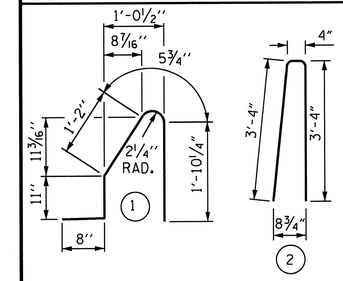

ALL BAR DIMENSIONS ARE OUT TO OUT

BILL OF MATERIAL

BARRIER RAIL ONLY

BAR	NO.	SIZE	TYPE	LENGTH	WEIGHT
* B5	88	#5	STR	7'-0"	642
* S1	40	#5	1	5'-1"	212
* S2	40	#5	2	7'-0"	292
* EPOXY COATED REINFORCING STEEL				LBS.	1146
CLASS AA CONCRETE				C.Y.	5.3
CONCRETE BARRIER RAIL				42.0	LIN. FT.

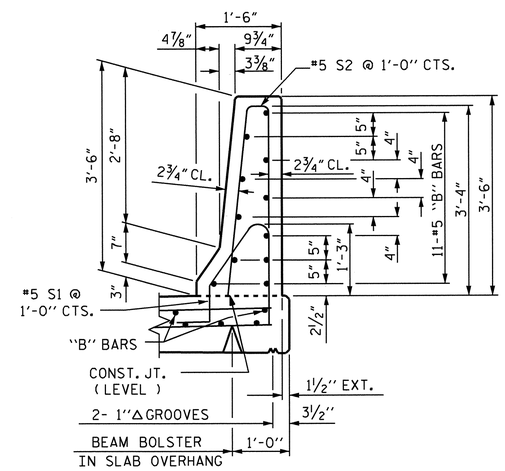

SECTION THRU RAIL

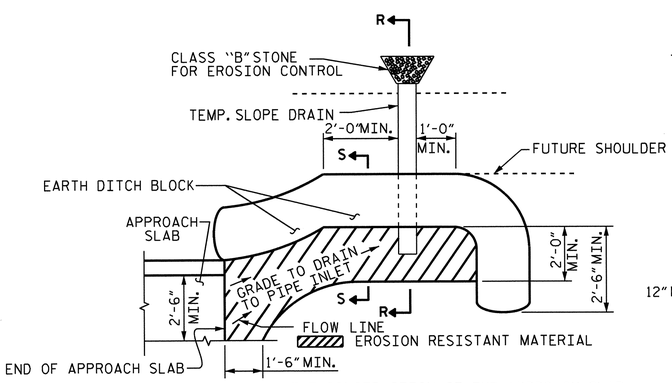

NOTE: IMMEDIATELY AFTER THE CONSTRUCTION OF THE APPROACH SLAB, THE CONTRACTOR SHALL PROVIDE TEMPORARY BERM AND SLOPE DRAIN. CONTRACTOR SHALL GRADE TO PIPE INLET AND PROVIDE EROSION RESISTANT MATERIAL AS SHOWN. THE EROSION RESISTANT MATERIAL SHALL BE EITHER 1) ASPHALT PLANT MIX, TYPE 1 OR TYPE 2, MIN. 2" DEPTH, 2) EROSION CONTROL MAT, OR 3) CONCRETE, AS DIRECTED BY THE ENGINEER. THE SLOPE DRAIN SHALL CONSIST OF A NON-PERFORATED TEMPORARY DRAINAGE PIPE, 12 INCHES IN DIAMETER.

PLAN VIEW

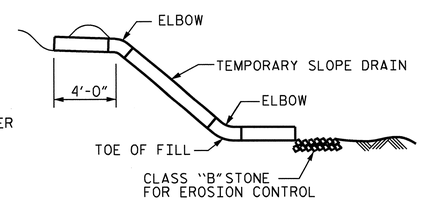

SECTION R-R

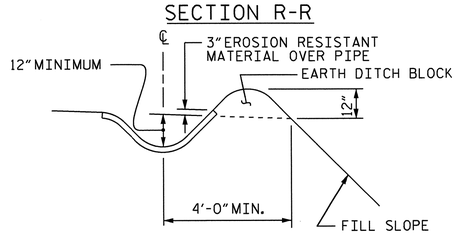

SECTION S-S

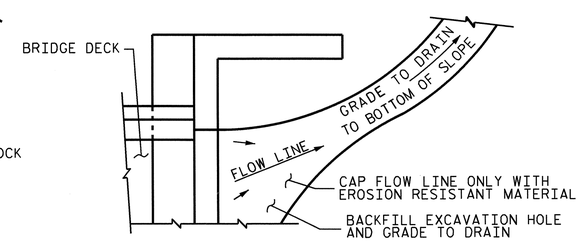

NOTE: IF THE APPROACH SLAB IS NOT CONSTRUCTED IMMEDIATELY AFTER THE BACKFILLING OF THE END BENT EXCAVATION, GRADE TO DRAIN TO THE BOTTOM OF THE SLOPE AND PROVIDE EROSION RESISTANT MATERIAL, SUCH AS FIBERGLASS ROVING OR AS DIRECTED BY THE ENGINEER TO PREVENT SOIL EROSION AND TO PROTECT THE AREA ADJACENT TO THE STRUCTURE. THE CONTRACTOR WILL BE REQUIRED TO REMOVE THESE MATERIALS PRIOR TO CONSTRUCTION OF THE APPROACH SLAB.

TEMPORARY DRAINAGE DETAIL

TEMPORARY BERM AND SLOPE DRAIN DETAILS

(TO BE USED WHEN SHOULDER BERM GUTTER IS REQUIRED)

PROJECT NO. R-2707B
CLEVELAND COUNTY
STATION: 247+90.66 -L-

SHEET 2 OF 2

STATE OF NORTH CAROLINA
DEPARTMENT OF TRANSPORTATION
RALEIGH

BRIDGE APPROACH SLAB DETAILS (RIGHT LANE)

NORTH CAROLINA PROFESSIONAL SEAL 15825 ENGINEER BRUCE D. KLAPPENBACH
6-27-2013

ASSEMBLED BY :	H. T. BARBOUR	DATE :	6-4-12
CHECKED BY :	B. A. DUKE	DATE :	6-12
DRAWN BY : FCJ	11/88	REV. 5/7/03	RWW/JTE
CHECKED BY : ARB	11/88	REV. 5/1/06RRR	MAA/KMM
		REV. 10/1/11	MAA/GM

REVISIONS								SHEET NO.
NO.	BY:	DATE:	NO.	BY:	DATE:			S-66
1			3					TOTAL SHEETS
2			4					266

STR. #2 STD. NO. BAS4 (SHT 3a)

13-MAY-2013 16:26
K:\Structures\Plans\Bolley\STRland2\tbarbour\Microstation\str-2\R-2707B_SD_AS.dgn
tbarbour

F.A. PROJECT NO. NHF-74(107)

SPAN A

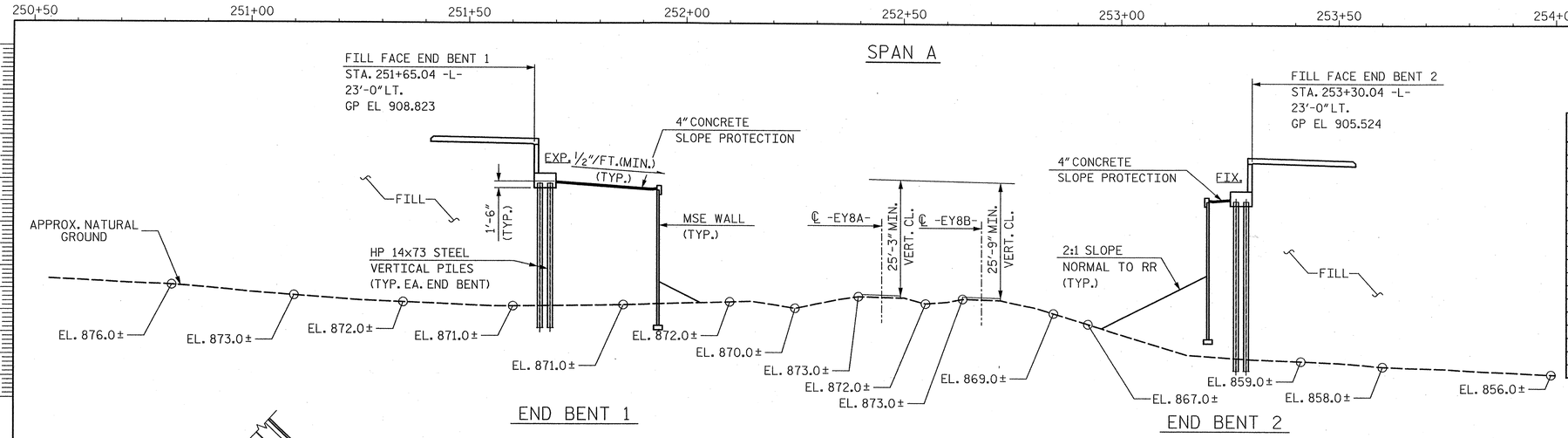

SECTION ALONG WORK LINE (LEFT LANE)

(BENTS ON SECTION AT RIGHT ANGLES TO BENTS)

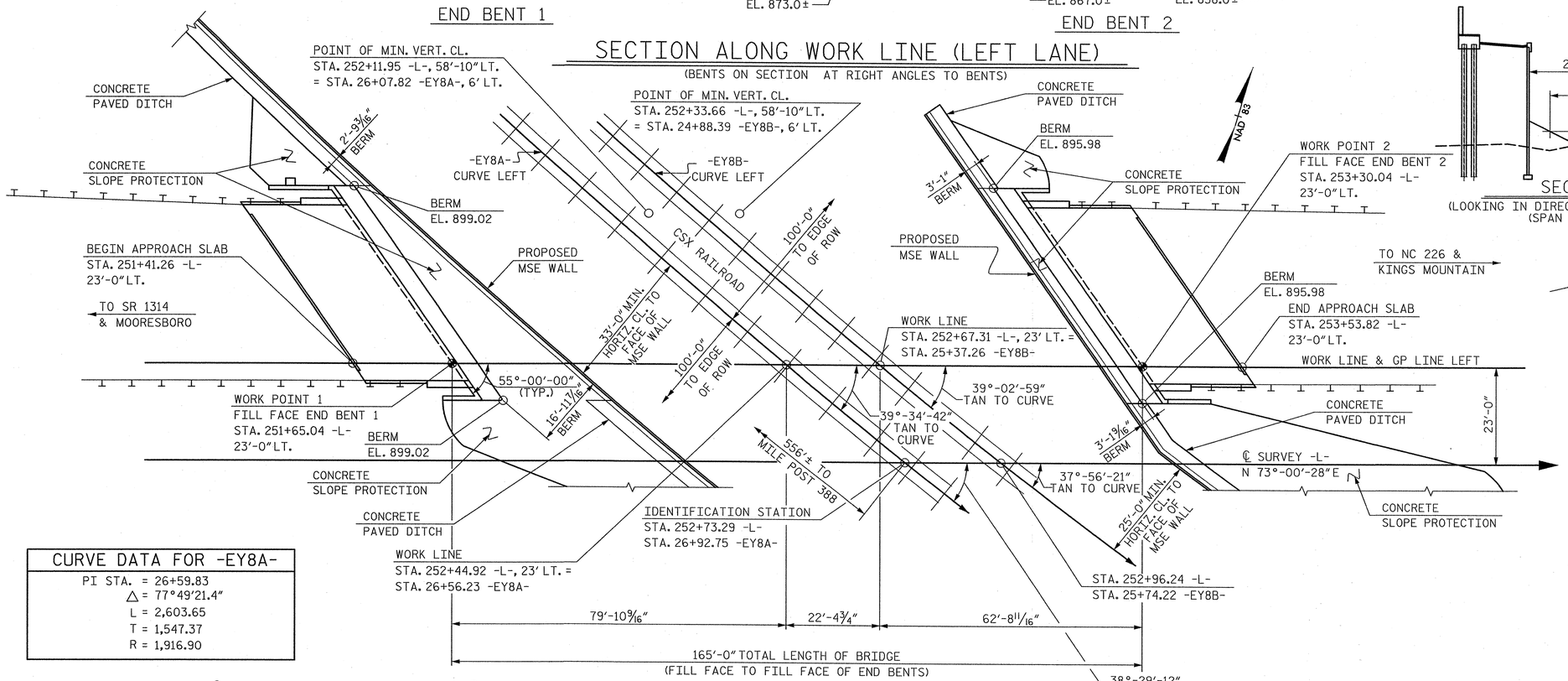

PLAN

(PILES NOT SHOWN FOR CLARITY)

NOTES:

FOR NOTES, SEE GENERAL DRAWING, SHEET 3 OF 3.

TOP OF RAIL ELEVATIONS

STATION -EY8A-	LEFT	RIGHT	STATION -EY8B-	LEFT	RIGHT
23+50	876.25	876.45	22+50	875.40	875.50
24+00	875.79	876.09	23+00	874.96	875.06
24+50	875.58	875.38	23+50	874.46	874.56
25+00	874.78	875.08	24+00	873.97	874.09
25+50	874.41	874.64	24+50	873.50	873.61
26+00	873.98	874.18	25+00	873.03	873.13
26+50	873.53	873.72	25+50	872.55	872.70
27+00	873.09	873.26	26+00	872.06	872.19
27+50	872.68	872.84	26+50	871.69	871.79
28+00	872.27	872.43	27+00	871.29	871.43
28+50	871.86	872.03	27+50	871.04	871.15
29+00	871.53	871.72	28+00	870.78	870.86
29+50	871.21	871.40	28+50	870.45	870.56
30+00	870.86	871.06	29+00	870.11	870.21
30+50	870.51	870.70	29+50	869.72	869.83
31+00	870.10	870.30	30+00	869.32	869.42
31+50	869.73	869.92			

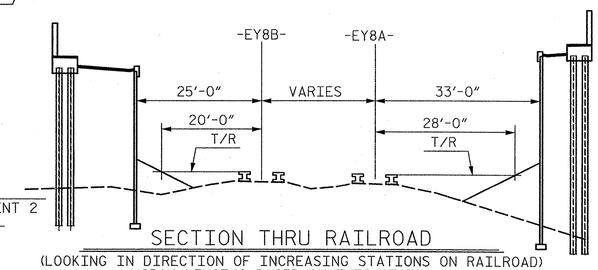

SECTION THRU RAILROAD

(LOOKING IN DIRECTION OF INCREASING STATIONS ON RAILROAD)
(SPAN LENGTHS BASED ON THIS SECTION)

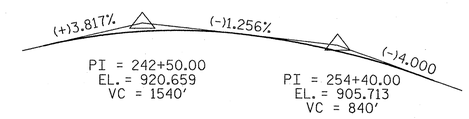

GRADE DATA -L-

CURVE DATA FOR -EY8B-

PI STA. = 25+24.50
△ = 77°-18'-13.6"
L = 2,571.80
T = 1,524.50
R = 1,906.16

CURVE DATA FOR -EY8A-

PI STA. = 26+59.83
△ = 77°49'21.4"
L = 2,603.65
T = 1,547.37
R = 1,916.90

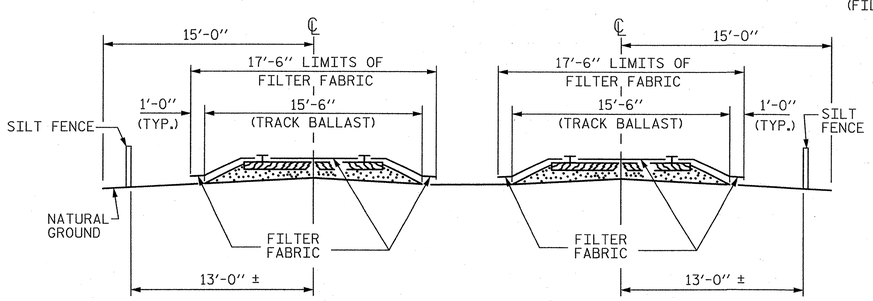

RAILROAD EROSION CONTROL DETAIL

NOTES

RAILROAD EROSION CONTROL MEASURES SHALL BE INSTALLED PRIOR TO PERFORMING ANY WORK IN THE RAILROAD RIGHT-OF-WAY.

ADDITIONAL EROSION CONTROL MEASURES FOR PROTECTION OF RAILROAD DITCHES MAY BE REQUIRED AS DIRECTED BY THE ENGINEER.

NO SEPARATE PAYMENT WILL BE MADE FOR RAILROAD EROSION CONTROL MEASURES.

LIMITS OF SILT FENCE AND FILTER FABRIC PARALLEL TO RAILROAD SHALL EXTEND A MINIMUM OF 25'-0" OUTSIDE EDGE OF SUPERSTRUCTURE OR TOE OF SLOPE ON CONSTRUCTION. A GREATER LENGTH OF SILT FENCE OR FILTER FABRIC MAY BE REQUIRED IF SO DIRECTED BY THE ENGINEER.

FILTER FABRIC TO BE NAILED TO TIMBER RAIL TIES WITH PRIME SOURCE "GRIP CAP" OR EQUIVALENT. FILTER FABRIC ON SHOULDER TO BE SECURED AS DIRECTED BY THE ENGINEER AND RAILROAD.

NORTH CAROLINA PROFESSIONAL SEAL 12916 ENGINEER PAUL J. BARBER 8/23/12

PROJECT NO. R-2707B
CLEVELAND COUNTY
STATION: 252+73.29 -L-
26+92.75 -EY8A-

BRIDGE NO. 459
SHEET 1 OF 3 CSX MILEPOST SF 387.9

STATE OF NORTH CAROLINA
DEPARTMENT OF TRANSPORTATION
RALEIGH

GENERAL DRAWING
FOR BRIDGE OVER
CSX RAILROAD ON US 74
BETWEEN SR 1314 AND NC 226
LEFT LANE

HNTB
HNTB NORTH CAROLINA, P.C.
NC License No. C-1554
343 E. Six Forks Rd., Suite 200, Raleigh, N.C. 27609

DRAWN BY M. WRIGHT DATE 6/12
CHECKED BY P. BARBER DATE 6/12
DWG. NO. 1

REVISIONS						SHEET NO.
NO.	BY	DATE	NO.	BY	DATE	S-67
1			3			TOTAL SHEETS
2			4			266

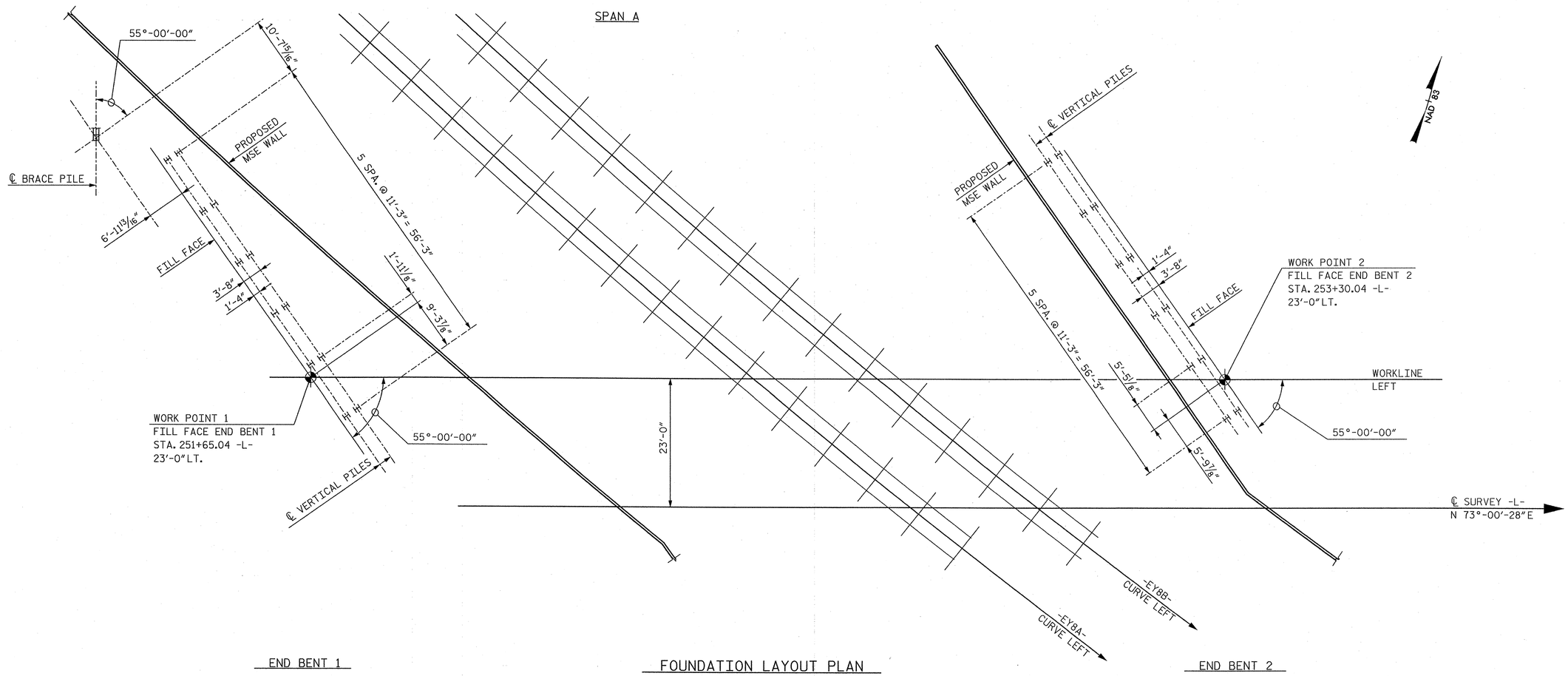

FOUNDATION NOTES:

ALL DIMENSIONS ARE PARALLEL OR NORMAL TO FILL FACES.

INDICATES PILE BATTER IN DIRECTION SHOWN. BRACE PILES @ END BENT WINGS ARE TO BE BATTERED @ 3:12.

ALL PILE DIMENSIONS ARE TO CENTERS OF PILES AT BOTTOM OF END BENT OR WINGWALL.

PILES AT END BENT 1 AND END BENT 2 ARE HP 14x73 STEEL PILES.

FOR FOUNDATION ELEVATIONS AND DETAILS, SEE END BENT DETAILS.

PROJECT NO. R-2707B

CLEVELAND COUNTY

STATION: 252+73.29 -L-

NORTH CAROLINA PROFESSIONAL SEAL 12916 ENGINEER PAUL J. BARBER 8/28/12

STATE OF NORTH CAROLINA
DEPARTMENT OF TRANSPORTATION
RALEIGH

GENERAL DRAWING

FOUNDATION LAYOUT

LEFT LANE

HNTB

HNTB NORTH CAROLINA, P.C.
NC License No. C-1554
343 E. Six Forks Rd., Suite 200, Raleigh, N.C. 27609

DRAWN BY M. WRIGHT DATE 6/12
CHECKED BY P. BARBER DATE 6/12

DWG. NO. 2

REVISIONS						SHEET NO.
NO.	BY	DATE	NO.	BY	DATE	S-68
1			3			TOTAL SHEETS
2			4			266

BENCHMARK #10 - 8" NAIL IN ROOT OF 18" WHITE PINE 91.16' LEFT OF -L- STA 249+98.11, EL = 881.23'

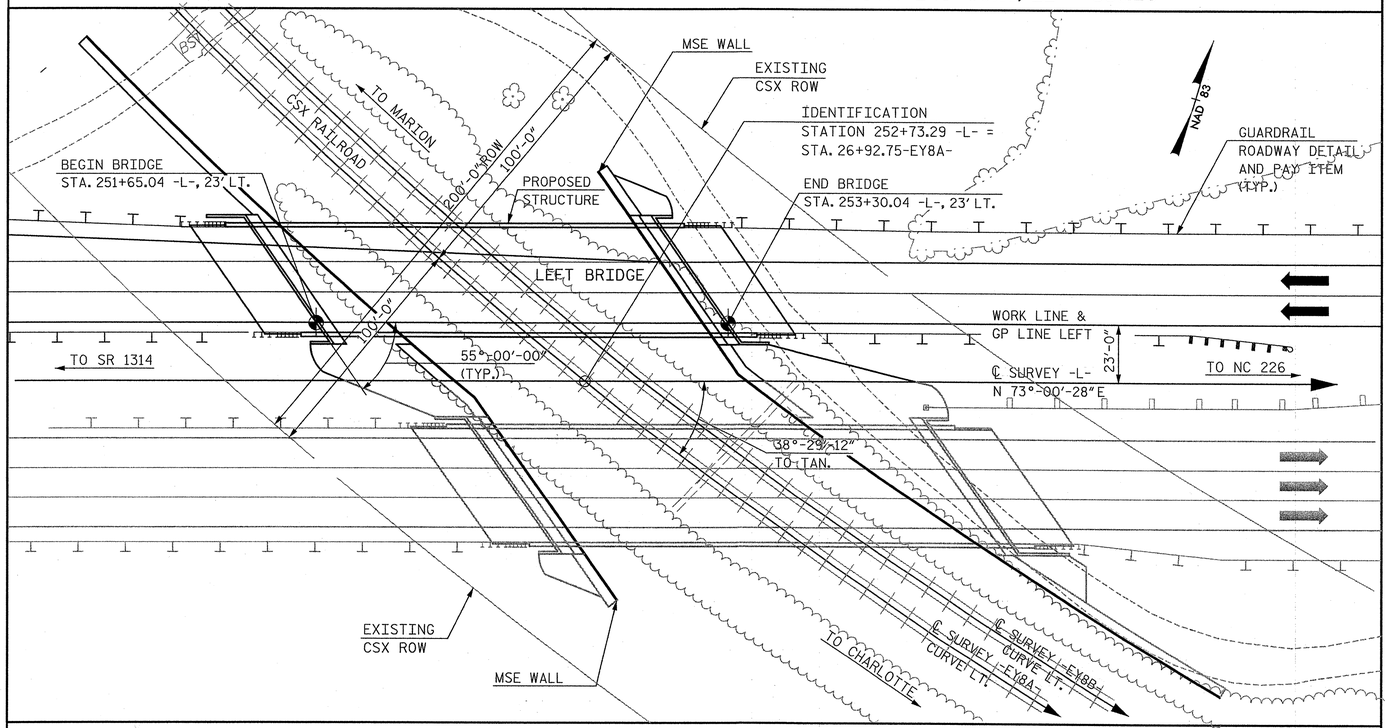

LOCATION SKETCH

NOTE: FOR UTILITY INFORMATION, SEE UTILITY PLANS AND SPECIAL PROVISIONS.

GENERAL NOTES

ASSUMED LIVE LOAD = HL-93 OR ALTERNATE LOADING.

FOR OTHER DESIGN DATA AND GENERAL NOTES, SEE SHEET SN.

FOR EROSION CONTROL MEASURES SEE EROSION CONTROL PLANS.

THIS BRIDGE HAS BEEN DESIGNED IN ACCORDANCE WITH THE AASHTO LRFD BRIDGE DESIGN SPECIFICATIONS.

ALL STRUCTURAL STEEL SHALL BE AASHTO M270 GRADE 50W AND PAINTED IN ACCORDANCE WITH SYSTEM 4 OF ARTICLE 442-8 OF THE STANDARD SPECIFICATIONS UNLESS OTHERWISE NOTED ON THE PLANS.

REMOVABLE FORMS MAY BE USED IN LIEU OF METAL STAY-IN-PLACE FORMS IN ACCORDANCE WITH ARTICLE 420-3 OF THE STANDARD SPECIFICATIONS.

FOR MAINTENANCE AND PROTECTION OF TRAFFIC BENEATH PROPOSED STRUCTURE, SEE SPECIAL PROVISIONS.

THE CLASS AA CONCRETE IN THE BRIDGE DECK SHALL CONTAIN FLY ASH OR GROUND GRANULATED BLAST FURNACE SLAG AT THE SUBSTITUTION RATE SPECIFIED IN ARTICLE 1024-1 AND IN ACCORDANCE WITH ARTICLES 1024-5 AND 1024-6 OF THE STANDARD SPECIFICATIONS. NO PAYMENT WILL BE MADE FOR THIS SUBSTITUTION AS IT IS CONSIDERED INCIDENTAL TO THE COST OF THE REINFORCED CONCRETE DECK SLAB.

THE CONTRACTOR SHALL PROVIDE INDEPENDENT ASSURANCE SAMPLES OF REINFORCING STEEL AS FOLLOWS:
FOR PROJECTS REQUIRING UP TO 400 TONS OF REINFORCING STEEL, ONE 30 INCH SAMPLE OF EACH SIZE BAR USED, AND
FOR PROJECTS REQUIRING OVER 400 TONS OF REINFORCING STEEL, TWO 30 INCH SAMPLES OF EACH SIZE BAR USED.
THE BARS FROM WHICH THE SAMPLES ARE TAKEN MUST THEN BE SPLICED WITH REPLACEMENT BARS OF THE SIZE AND LENGTH OF THE SAMPLE, PLUS A MINIMUM LAP SPLICE OF THIRTY BAR DIAMETERS. PAYMENT FOR THE SAMPLES OF REINFORCING STEEL SHALL BE CONSIDERED INCIDENTAL TO VARIOUS PAY ITEMS.

NEEDLE BEAMS WILL NOT BE ALLOWED UNLESS OTHERWISE CALLED FOR ON THE PLANS OR APPROVED BY THE ENGINEER.

FOR SUBMITTAL OF WORKING DRAWINGS, SEE SPECIAL PROVISIONS.

FOR FALSEWORK AND FORMWORK, SEE SPECIAL PROVISIONS.

FOR CRANE SAFETY, SEE SPECIAL PROVISIONS.

THE RAILROAD TRACK TOP OF RAIL ELEVATIONS SHOWN ON THE PLANS ARE FROM THE BEST INFORMATION AVAILABLE. PRIOR TO BEGINNING BRIDGE CONSTRUCTION, VERIFY THE TOP OF RAIL ELEVATIONS AND REPORT ANY VARIATIONS TO THE ENGINEER. ANY PLAN REVISIONS NECESSARY TO ACHIEVE THE REQUIRED MINIMUM VERTICAL CLEARANCE WILL BE PROVIDED BY THE DEPARTMENT.

FOR GROUT FOR STRUCTURES, SEE SPECIAL PROVISIONS.

THIS BRIDGE IS LOCATED IN SEISMIC ZONE 1.

FOR PILES, SEE SECTION 450 OF THE STANDARD SPECIFICATIONS.

PILES AT END BENT NO. 1 ARE DESIGNED FOR A FACTORED RESISTANCE OF 90 TONS PER PILE.

DRIVE PILES AT END BENT NO. 1 TO A REQUIRED DRIVING RESISTANCE OF 150 TONS PER PILE.

PILES AT END BENT NO. 2 ARE DESIGNED FOR A FACTORED RESISTANCE OF 90 TONS PER PILE.

DRIVE PILES AT END BENT NO. 2 TO A REQUIRED DRIVING RESISTANCE OF 150 TONS PER PILE.

FOR PLACING LOAD ON STRUCTURE MEMBERS, SEE SPECIAL PROVISIONS.

TOTAL BILL OF MATERIAL

	REINFORCED CONCRETE DECK SLAB	GROOVING BRIDGE FLOORS	CLASS A CONCRETE	BRIDGE APPROACH SLABS, STATION 252+73.29 -L- (LEFT LANE)	REINFORCING STEEL	STRUCTURAL STEEL	HP 14x73 STEEL PILES		CONCRETE BARRIER RAIL	72" CHAIN LINK FENCE	4" SLOPE PROTECTION	ELASTOMERIC BEARINGS	EXPANSION JOINT SEALS
	SQ. FT.	SQ. FT.	CU. YDS.	LUMP SUM	LBS.	APPROX. LBS.	NO.	L.F.	L.F.	L.F.	SQ. YD.	LUMP SUM	LUMP SUM
SUPERSTRUCTURE	7,295.2	8,067.9	—	LUMP SUM	—	322,754	—	—	366.7	322.0	—	LUMP SUM	LUMP SUM
END BENT 1	—	—	61.6	—	9,219	—	13	850	—	—	203.5	—	—
END BENT 2	—	—	58.3	—	8,976	—	12	840	—	—	134.7	—	—
TOTAL	7,295.2	8,067.9	119.9	LUMP SUM	18,195	322,754	25	1,690	366.7	322.0	338.2	LUMP SUM	LUMP SUM

NORTH CAROLINA PROFESSIONAL SEAL 12916 ENGINEER PAUL J. BARBER 8/28/12

PROJECT NO. R-2707B
CLEVELAND COUNTY
STATION: 252+73.29 -L-

SHEET 3 OF 3

STATE OF NORTH CAROLINA
DEPARTMENT OF TRANSPORTATION
RALEIGH

GENERAL DRAWING
LOCATION SKETCH,
GENERAL NOTES AND
TOTAL BILL OF MATERIAL
LEFT LANE

HNTB NORTH CAROLINA, P.C.
NC License No. C-1554
343 E. Six Forks Rd., Suite 200, Raleigh, N.C. 27609

DRAWN BY J. BAYNE DATE 6/12
CHECKED BY P. BARBER DATE 6/12
DWG. NO. 3

REVISIONS						SHEET NO.
NO.	BY	DATE	NO.	BY	DATE	S-69
1			3			TOTAL SHEETS
2			4			266

LOAD AND RESISTANCE FACTOR RATING (LRFR) SUMMARY FOR STEEL GIRDERS

LEVEL		VEHICLE	WEIGHT (W) (TONS)	CONTROLLING LOAD RATING (#)	MINIMUM RATING FACTORS (RF)	TONS = W x RF	STRENGTH I LIMIT STATE											SERVICE II LIMIT STATE						COMMENT NUMBER
								MOMENT					SHEAR						MOMENT					
							LIVE-LOAD FACTORS (γ_{LL})	DISTRIBUTION FACTORS (DF)	RATING FACTOR	SPAN	GIRDER LOCATION	DISTANCE FROM LEFT END OF SPAN (ft)	DISTRIBUTION FACTORS (DF)	RATING FACTOR	SPAN	GIRDER LOCATION	DISTANCE FROM LEFT END OF SPAN (ft)	LIVE-LOAD FACTORS (γ_{LL})	DISTRIBUTION FACTORS (DF)	RATING FACTOR	SPAN	GIRDER LOCATION	DISTANCE FROM LEFT END OF SPAN (ft)	
DESIGN LOAD RATING		HL-93 (INVENTORY)	N/A	1	1.09	--	1.75	0.81	1.17	A	EL	79.4	0.82	1.09	A	EL	23.5	1.30	0.81	1.76	A	EL	79.4	
		HL-93 (OPERATING)	N/A	--	1.42	--	1.35	0.81	1.52	A	EL	79.4	0.82	1.42	A	EL	23.5	1.00	0.81	2.29	A	EL	79.4	
		HS-20 (INVENTORY)	36.00	2	1.63	58.7	1.75	0.81	1.86	A	EL	79.4	0.82	1.63	A	EL	23.5	1.30	0.81	2.80	A	EL	79.4	
		HS-20 (OPERATING)	36.00	--	2.11	76.0	1.35	0.81	2.41	A	EL	79.4	0.82	2.11	A	EL	23.5	1.00	0.81	3.65	A	EL	79.4	
LEGAL LOAD RATING	SINGLE VEHICLE (SV)	SNSH	13.500	--	5.13	69.3	1.40	0.81	5.79	A	EL	79.4	0.82	5.13	A	EL	23.5	1.30	0.81	6.97	A	EL	79.4	
		SNGARBS2	20.000	--	3.55	71.0	1.40	0.81	4.07	A	EL	79.4	0.82	3.55	A	EL	23.5	1.30	0.81	4.91	A	EL	79.4	
		SNAGRIS2	22.000	--	3.26	71.7	1.40	0.81	3.77	A	EL	79.4	0.82	3.26	A	EL	23.5	1.30	0.81	4.53	A	EL	79.4	
		SNCOTTS3	27.250	--	2.56	69.8	1.40	0.81	2.87	A	EL	79.4	0.82	2.56	A	EL	23.5	1.30	0.81	3.46	A	EL	79.4	
		SNAGGRS4	34.925	--	2.06	71.9	1.40	0.81	2.31	A	EL	79.4	0.82	2.06	A	EL	23.5	1.30	0.81	2.78	A	EL	79.4	
		SNS5A	35.550	--	2.05	72.9	1.40	0.81	2.26	A	EL	79.4	0.82	2.05	A	EL	23.5	1.30	0.81	2.73	A	EL	79.4	
		SNS6A	39.950	--	1.85	73.9	1.40	0.81	2.04	A	EL	79.4	0.82	1.85	A	EL	23.5	1.30	0.81	2.46	A	EL	79.4	
		SNS7B	42.000	--	1.78	74.8	1.40	0.81	1.94	A	EL	79.4	0.82	1.78	A	EL	23.5	1.30	0.81	2.34	A	EL	79.4	
	TRUCK TRACTOR SEMI-TRAILER (TTST)	TNAGRIT3	33.000	--	2.21	72.9	1.40	0.81	2.48	A	EL	79.4	0.82	2.21	A	EL	23.5	1.30	0.81	2.98	A	EL	79.4	
		TNT4A	33.075	--	2.19	72.4	1.40	0.81	2.48	A	EL	79.4	0.82	2.19	A	EL	23.5	1.30	0.81	2.98	A	EL	79.4	
		TNT6A	41.600	--	1.84	76.5	1.40	0.81	1.99	A	EL	79.4	0.82	1.84	A	EL	23.5	1.30	0.81	2.40	A	EL	79.4	
		TNT7A	42.000	--	1.81	76.0	1.40	0.81	1.98	A	EL	79.4	0.82	1.81	A	EL	23.5	1.30	0.81	2.39	A	EL	79.4	
		TNT7B	42.000	--	1.76	73.9	1.40	0.81	2.01	A	EL	79.4	0.82	1.76	A	EL	23.5	1.30	0.81	2.42	A	EL	79.4	
		TNAGRIT4	43.000	--	1.71	73.5	1.40	0.81	1.94	A	EL	79.4	0.82	1.71	A	EL	23.5	1.30	0.81	2.34	A	EL	79.4	
		TNAGT5A	45.000	--	1.66	74.7	1.40	0.81	1.85	A	EL	79.4	0.82	1.66	A	EL	23.5	1.30	0.81	2.23	A	EL	79.4	
		TNAGT5B	45.000	3	1.63	73.4	1.40	0.81	1.84	A	EL	79.4	0.82	1.63	A	EL	23.5	1.30	0.81	2.21	A	EL	79.4	
FATIGUE		HL-93 (INVENTORY)	γ_{LL}=1.50	--	1.62																			

LOAD FACTORS:

DESIGN LOAD RATING FACTORS	LIMIT STATE	γ_{DC}	γ_{DW}
	STRENGTH I	1.25	1.50
	SERVICE II	1.00	1.00

NOTES:

MINIMUM RATING FACTORS ARE BASED ON THE STRENGTH I AND SERVICE II LIMIT STATES.

ALLOWABLE STRESS FOR SERVICE II LIMIT STATE ARE AS REQUIRED FOR DESIGN.

COMMENTS:

1.
2.
3.
4.

(#) CONTROLLING LOAD RATING
(1) DESIGN LOAD RATING (HL-93) **
(2) DESIGN LOAD RATING (HS-20) **
(3) LEGAL LOAD RATING **
** SEE CHART FOR VEHICLE TYPE

GIRDER LOCATION
I - INTERIOR GIRDER
EL - EXTERIOR LEFT GIRDER
ER - EXTERIOR RIGHT GIRDER

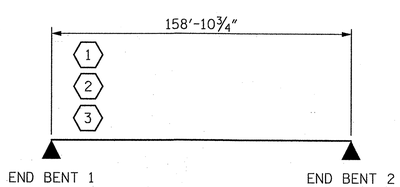

LRFR SUMMARY

NOTE: SPAN LENGTH PROVIDED IS BEARING TO BEARING LENGTH.

PROJECT NO. R-2707B

CLEVELAND COUNTY

STATION: 252+73.29 -L-

NORTH CAROLINA PROFESSIONAL SEAL 12916 ENGINEER PAUL J. BARBER 8/8/12

STATE OF NORTH CAROLINA
DEPARTMENT OF TRANSPORTATION
RALEIGH

STANDARD

LRFR SUMMARY FOR STEEL GIRDERS
(NON-INTERSTATE TRAFFIC)
LEFT LANE

ASSEMBLED BY : J. BAYNE	DATE : 6/12
CHECKED BY : D. RAGAN	DATE : 6/12
DRAWN BY : MAA 1/08	REV. 11/12/08RR MAA/GM
CHECKED BY : GM/DI 2/08	REV. 10/1/11 MAA/GM

HNTB NORTH CAROLINA, P.C.
NC License No. C-1554
343 E. Six Forks Rd., Suite 200, Raleigh, N.C. 27609

DRAWN BY J. BAYNE DATE 6/12
CHECKED BY D. RAGAN DATE 6/12

DWG. NO. 4

REVISIONS						
NO.	BY:	DATE:	NO.	BY:	DATE:	
1			3			
2			4			

SHEET NO. S-70

TOTAL SHEETS 200

STD. NO. LRFR3

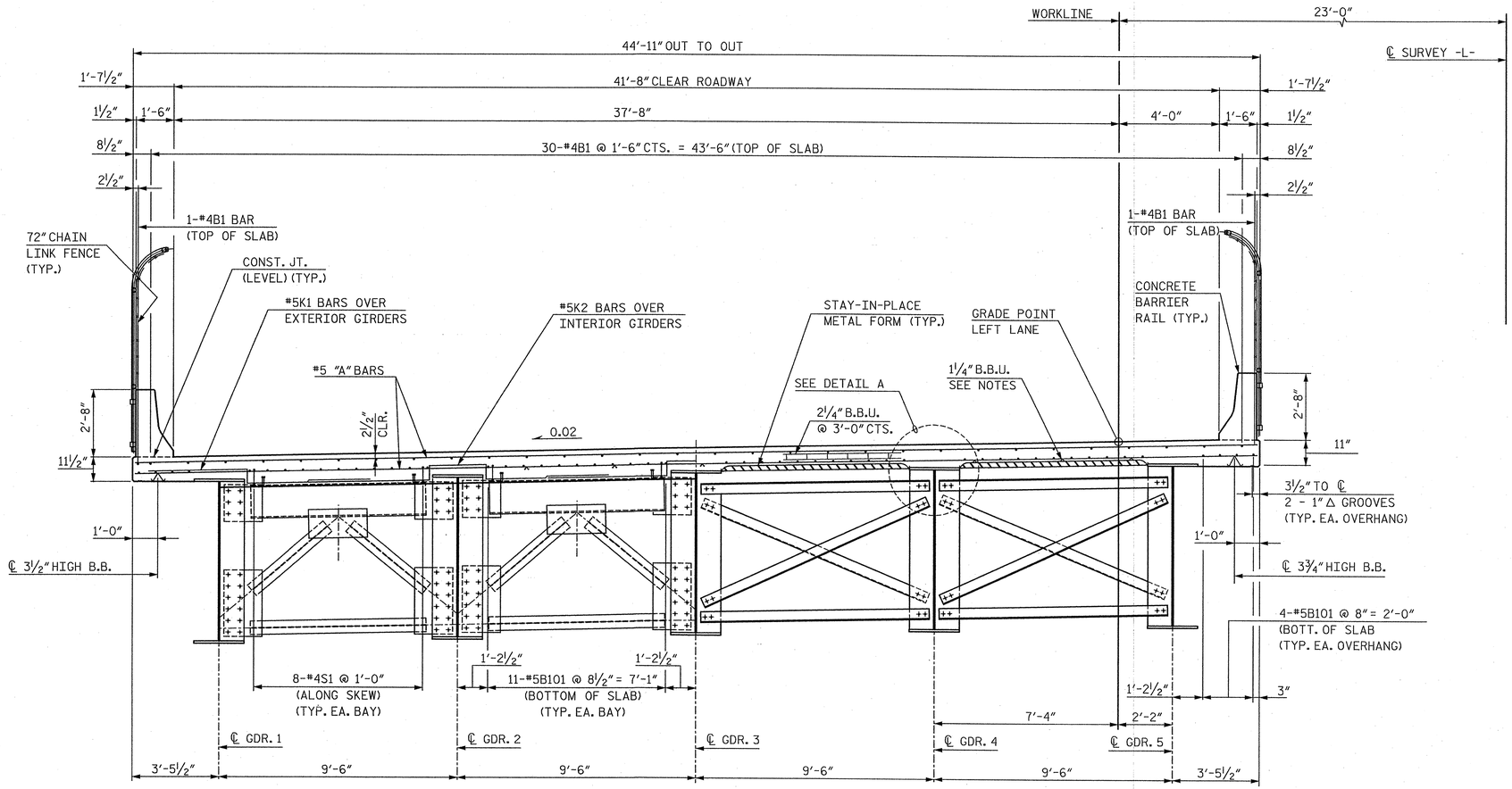

HALF SECTION AT END DIAPHRAGM

HALF SECTION AT INTERMEDIATE DIAPHRAGM

TYPICAL SECTION

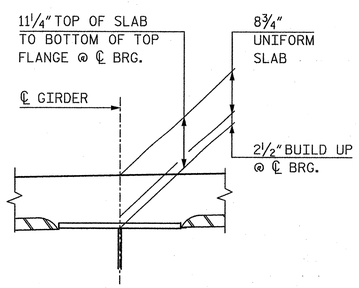

DETAIL A

NOTES:

ALL HORIZONTAL DIMENSIONS ARE SHOWN NORMAL TO ℄ SURVEY UNLESS OTHERWISE NOTED.

PROVIDE 1¼" HIGH BEAM BOLSTERS UPPER AT 4'-0" CTS. ATOP THE METAL STAY-IN-PLACE FORMS TO SUPPORT THE BOTTOM MAT OF 'A' BARS. WHEN USING REMOVABLE FORMS, PROVIDE CONTINUOUS HIGH CHAIRS FOR METAL DECK (C.H.C.M.) @ 4'-0" CTS. WITH A HEIGHT TO SUPPORT THE BOTTOM MAT OF 'A' BARS A CLEAR DISTANCE OF 2½" ABOVE THE TOP OF THE REMOVABLE FORM.

NO CHAMFER IS REQUIRED ON CORNERS OF GIRDER BUILDUPS.

#5G1 BAR MAY BE SHIFTED SLIGHTLY, AS NECESSARY, TO CLEAR REINFORCING STEEL AND STIRRUPS.

DIRECTION OF CASTING DECK CONCRETE SHALL BE FROM THE FIXED BEARING END TOWARD THE EXPANSION BEARING END OF THE SPAN.

THE CONTRACTOR MAY, WHEN NECESSARY, PROPOSE A SCHEME FOR AVOIDING INTERFERENCE BETWEEN METAL STAY-IN-PLACE FORM SUPPORTS OR FORMS AND BEAM/GIRDER STIFFENERS OR CONNECTOR PLATES. THE PROPOSAL SHALL BE INDICATED, AS APPROPRIATE, ON EITHER THE STEEL WORKING DRAWINGS OR THE METAL STAY-IN-PLACE FORM WORKING DRAWINGS.

PROJECT NO. R-2707B
CLEVELAND COUNTY
STATION: 252+73.29 -L-

SHEET 1 OF 2

NORTH CAROLINA PROFESSIONAL SEAL 12916 ENGINEER PAUL J. BARBER 05/28/12

STATE OF NORTH CAROLINA
DEPARTMENT OF TRANSPORTATION
RALEIGH

SUPERSTRUCTURE

TYPICAL SECTIONS

LEFT LANE

HNTB NORTH CAROLINA, P.C.
NC License No. C-1554
343 E. Six Forks Rd., Suite 200, Raleigh, N.C. 27609

DRAWN BY J. BAYNE DATE 5/12
CHECKED BY P. BARBER DATE 5/12
DWG. NO. 5

REVISIONS						SHEET NO.
NO.	BY	DATE	NO.	BY	DATE	S-71
1			3			TOTAL SHEETS
2			4			266

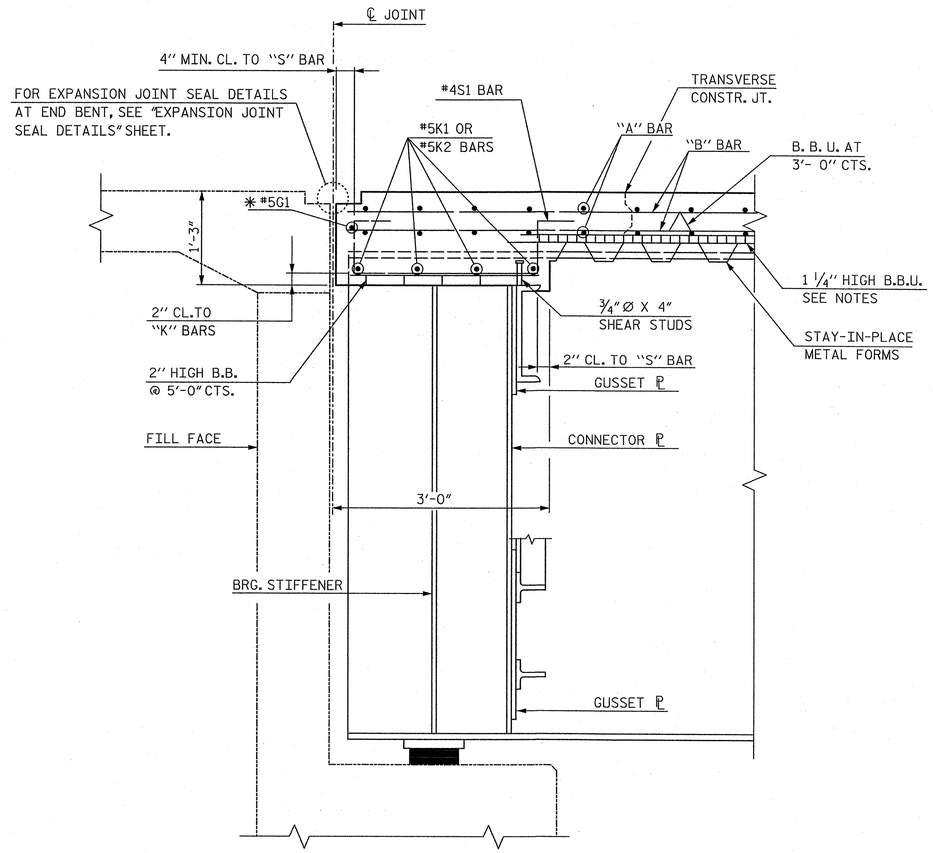

SECTION A-A

✳ #5 "G" BAR MAY BE SHIFTED SLIGHTLY, AS NECESSARY TO CLEAR DIAPHRAGM AND REINGORCING STEEL.

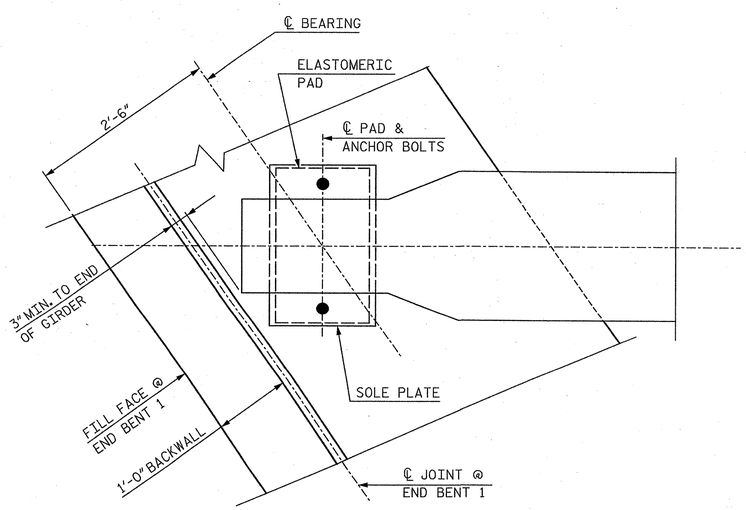

PLAN AT END BENT

END BENT 1 SHOWN, END BENT 2 SIMILAR

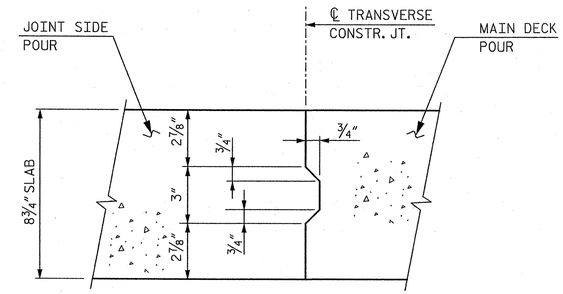

NOTE:
REINFORCING STEEL IN SLAB NOT SHOWN. REINFORCING STEEL SHALL BE CONTINUOUS THROUGH JOINT.

TRANSVERSE CONSTRUCTION JOINT

PROJECT NO. R-2707B
CLEVELAND COUNTY
STATION: 252+73.29 -L-

SHEET 2 OF 2

NORTH CAROLINA PROFESSIONAL SEAL 12916 ENGINEER PAUL J. BARBER 5/28/12

HNTB NORTH CAROLINA, P.C.
NC License No. C-1554
343 E. Six Forks Rd., Suite 200, Raleigh, N.C. 27609

DRAWN BY J. BAYNE DATE 5/12
CHECKED BY P. BARBER DATE 6/12
DWG. NO. 6

STATE OF NORTH CAROLINA
DEPARTMENT OF TRANSPORTATION
RALEIGH

SUPERSTRUCTURE

TYPICAL SECTIONS

LEFT LANE

REVISIONS						SHEET NO.
NO.	BY	DATE	NO.	BY	DATE	S-72
1			3			TOTAL SHEETS
2			4			266

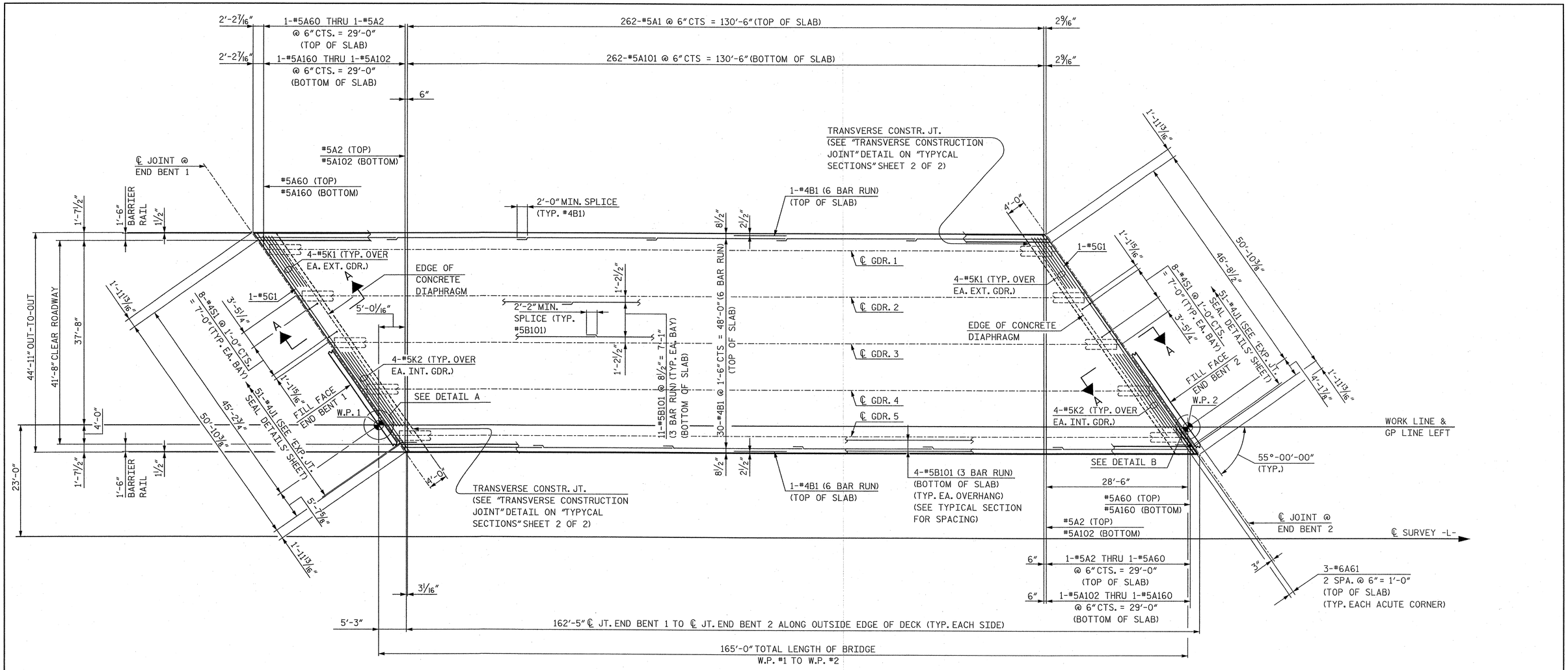

PLAN OF SPAN A

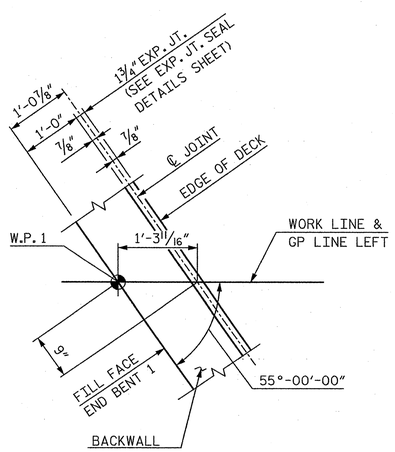

DETAIL A

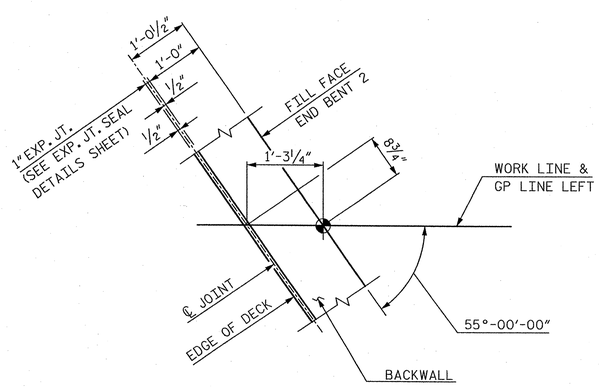

DETAIL B

PROJECT NO. R-2707B

CLEVELAND COUNTY

STATION: 252+73.29 -L-

STATE OF NORTH CAROLINA
DEPARTMENT OF TRANSPORTATION
RALEIGH

SUPERSTRUCTURE

PLAN OF SPAN A

LEFT LANE

HNTB NORTH CAROLINA, P.C.
NC License No. C-1554
343 E. Six Forks Rd., Suite 200, Raleigh, N.C. 27609

DRAWN BY J. BAYNE DATE 5/12
CHECKED BY P. BARBER DATE 5/12

DWG. NO. 7

REVISIONS						SHEET NO.
NO.	BY	DATE	NO.	BY	DATE	S-73
1			3			TOTAL SHEETS
2			4			266

NOTES:

ALL DIMENSIONS ARE MEASURED ALONG ℄ GIRDERS UNLESS NOTED.

FOR BOLTED FIELD SPLICE DETAILS AND STRUCTURAL STEEL NOTES, SEE "FIELD SPLICE AND STRUCTURAL STEEL NOTES" SHEET.

FOR DIAPHRAGM DETAILS, SEE "STRUCTURAL STEEL DETAILS" SHEET.

FOR GIRDER ELEVATION & DETAILS, SEE "GIRDER DETAILS" SHEET.

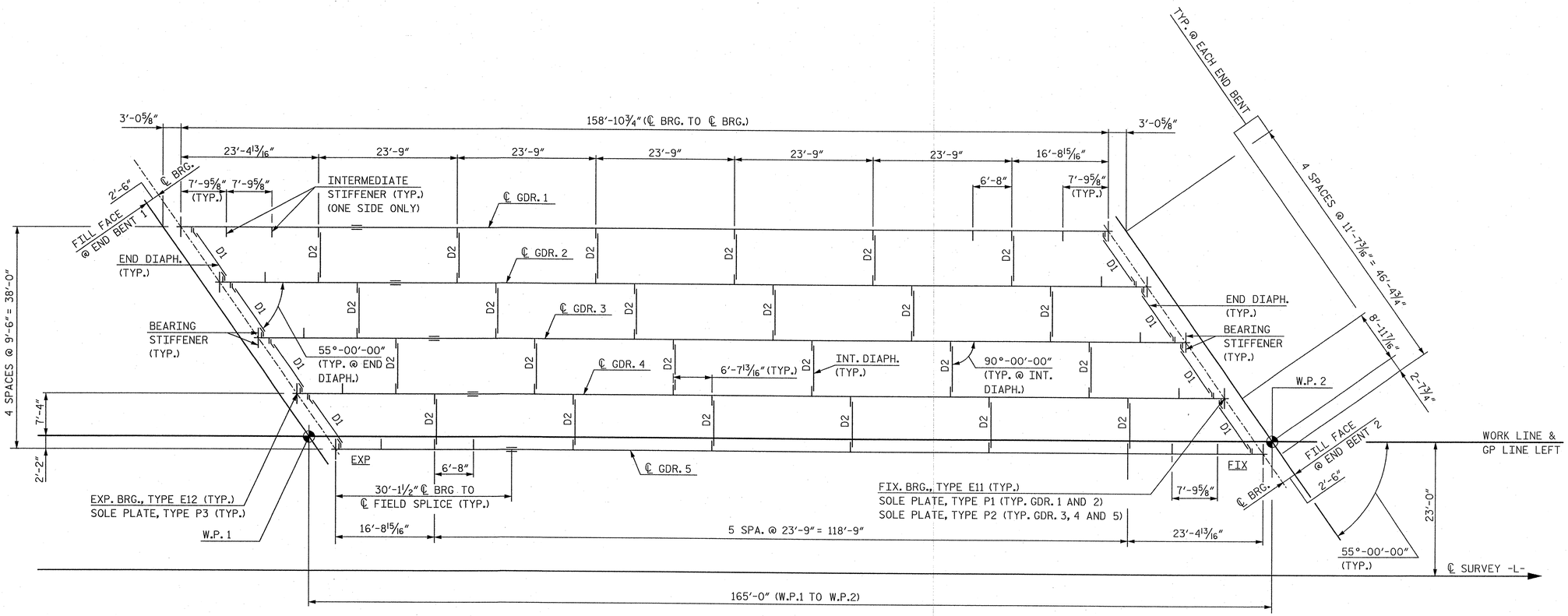

SPAN A

FRAMING PLAN

PROJECT NO. R-2707B

CLEVELAND COUNTY

STATION: 252+73.29 -L-

NORTH CAROLINA PROFESSIONAL ENGINEER SEAL 12916 PAUL J. BARBER 5/30/12

STATE OF NORTH CAROLINA
DEPARTMENT OF TRANSPORTATION
RALEIGH

SUPERSTRUCTURE

FRAMING PLAN

LEFT LANE

HNTB

HNTB NORTH CAROLINA, P.C.
NC License No. C-1554
343 E. Six Forks Rd., Suite 200, Raleigh, N.C. 27609

DRAWN BY J. BAYNE DATE 6/12
CHECKED BY P. BARBER DATE 6/12

DWG. NO. 8

REVISIONS						SHEET NO.
NO.	BY	DATE	NO.	BY	DATE	S-74
1			3			TOTAL SHEETS
2			4			266

NOTES:

FOR STRUCTURAL STEEL NOTES, SEE "FIELD SPLICE AND STRUCTURAL STEEL NOTES" SHEET.

ALL DIMENSIONS ARE HORIZONTAL OR VERTICAL UNLESS NOTED OTHERWISE.

STUDS MAY BE MOVED SLIGHTLY TO AVOID BOLTS IN FLANGE SPLICE AT BOLTED FIELD SPLICE.

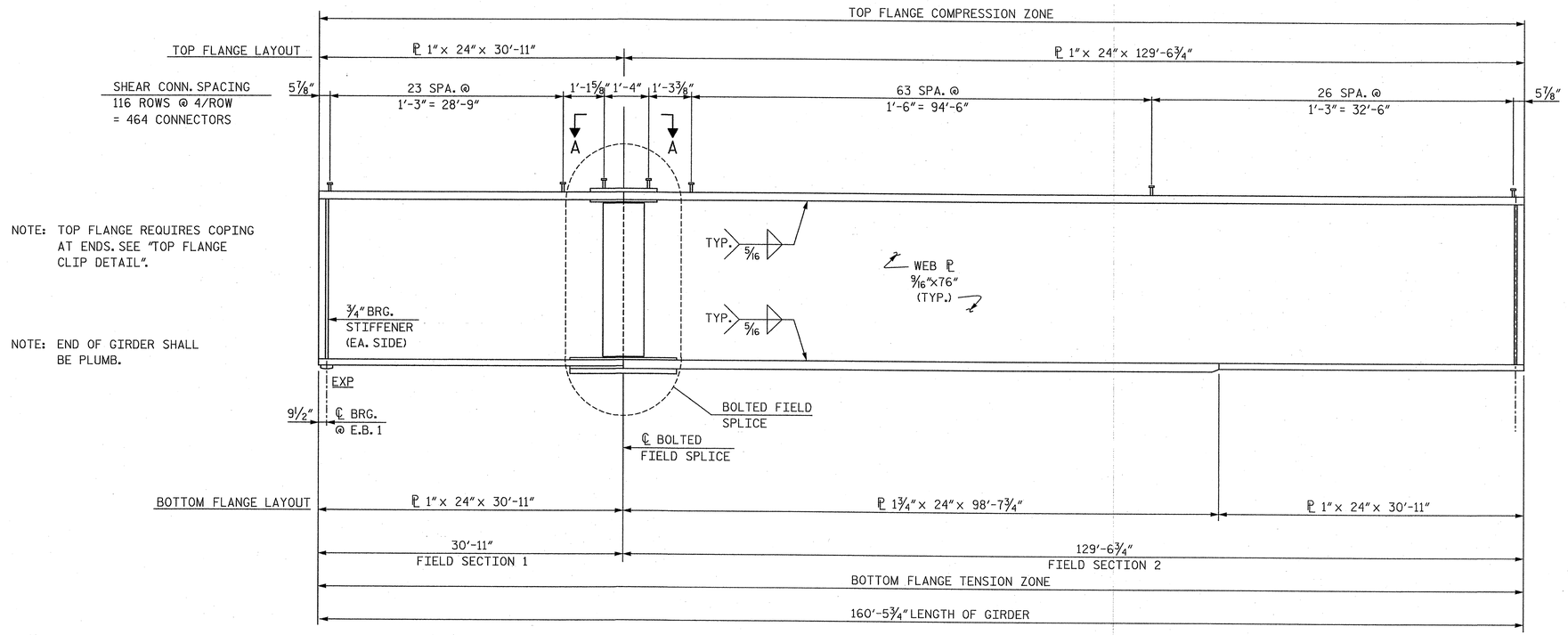

TYPICAL GIRDER ELEVATION

(INTERIOR GIRDER SHOWN, EXTERIOR GIRDER SIMILAR)
(INTERMEDIATE STIFFENERS & DIAPHRAGM CONNECTOR PLATES NOT SHOWN)

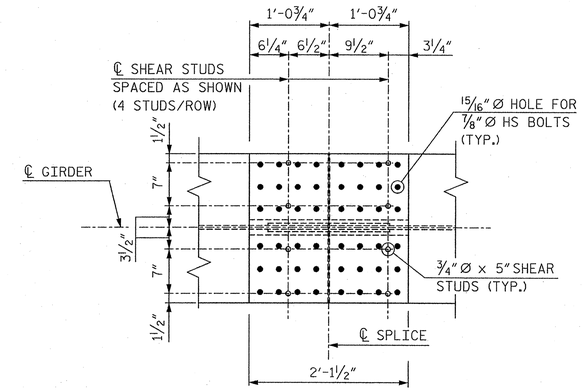

VIEW A-A

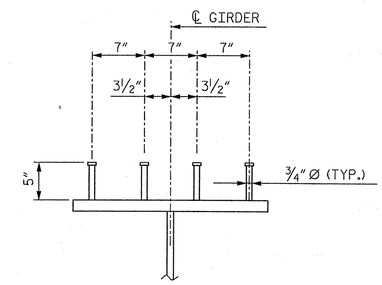

GIRDER - SHEAR CONNECTOR DETAIL

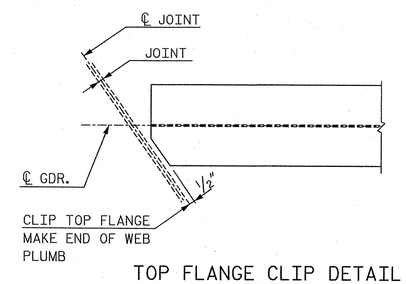

TOP FLANGE CLIP DETAIL

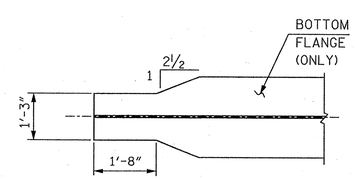

DETAIL A

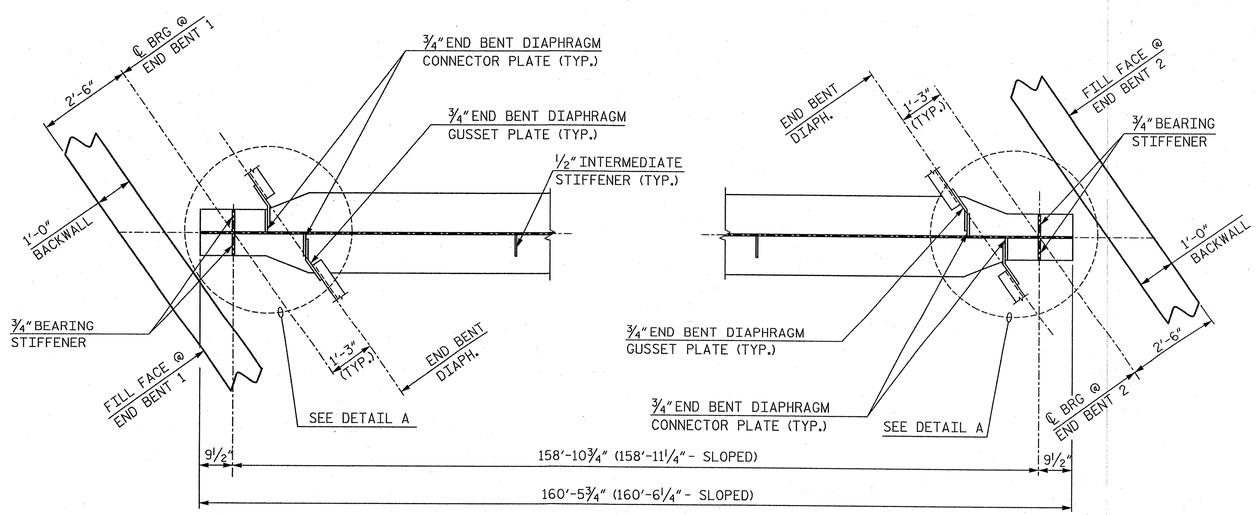

BOTTOM FLANGE GIRDER END DETAILS

PROJECT NO. R-2707B
CLEVELAND COUNTY
STATION: 252+73.29 -L-

STATE OF NORTH CAROLINA
DEPARTMENT OF TRANSPORTATION
RALEIGH

SUPERSTRUCTURE
GIRDER DETAILS
LEFT LANE

NORTH CAROLINA PROFESSIONAL SEAL 12916 ENGINEER PAUL J. BARBER 6/25/12

HNTB
HNTB NORTH CAROLINA, P.C.
NC License No. C-1554
343 E. Six Forks Rd., Suite 200, Raleigh, N.C. 27609

DRAWN BY J. BAYNE DATE 6/12
CHECKED BY P. BARBER DATE 6/12
DWG. NO. 9

REVISIONS						SHEET NO.
NO.	BY	DATE	NO.	BY	DATE	S-75
1			3			TOTAL SHEETS
2			4			266

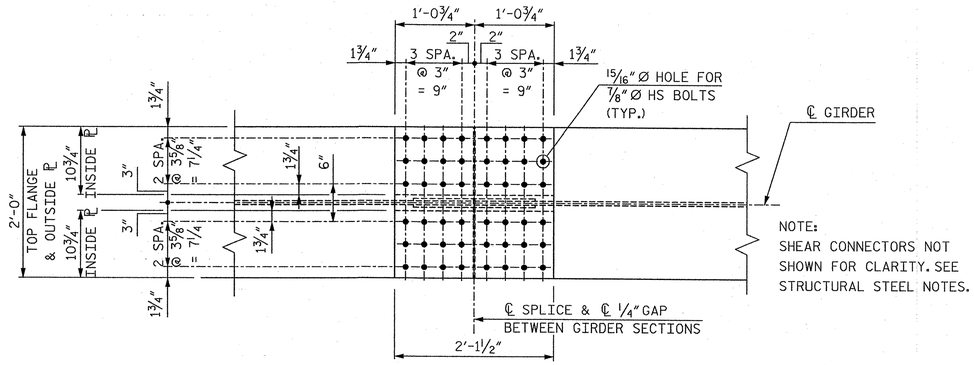

PLAN
(TOP OF TOP FLANGE)

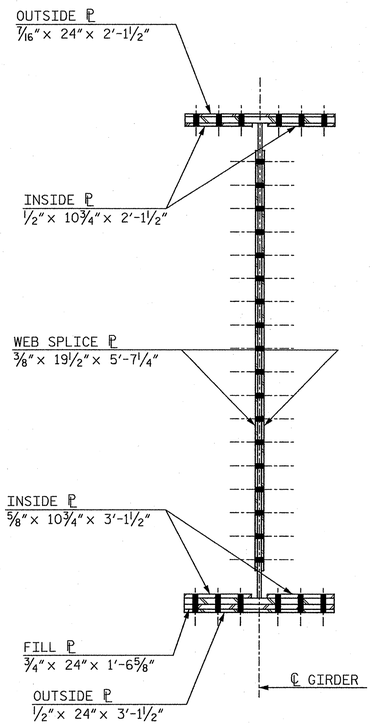

SECTION A-A

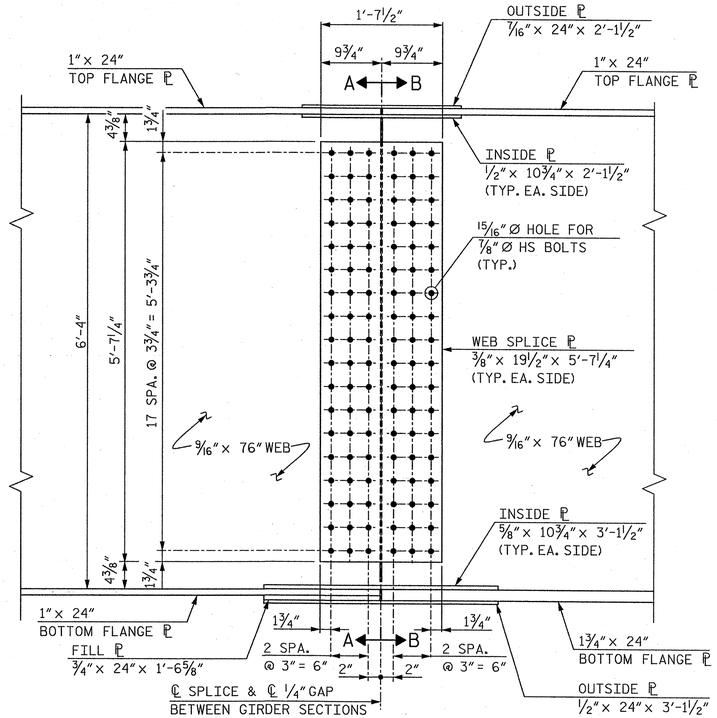

ELEVATION

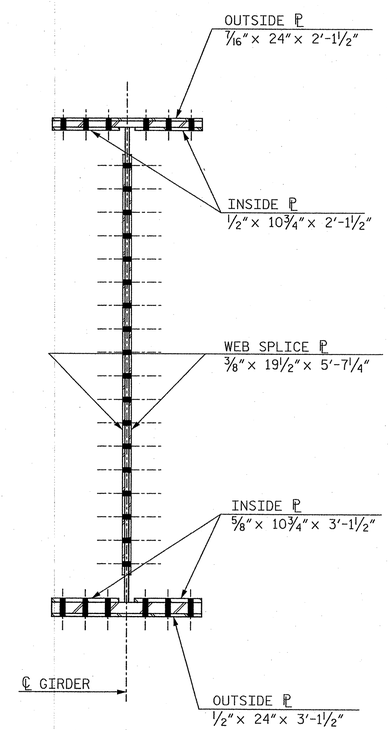

SECTION B-B

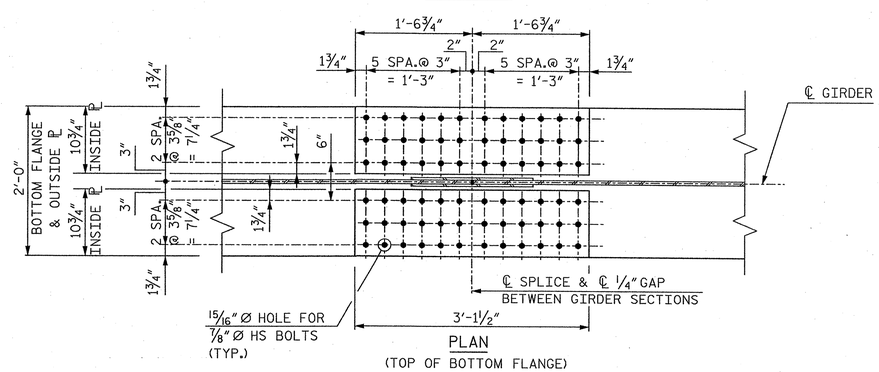

PLAN
(TOP OF BOTTOM FLANGE)

BOLTED FIELD SPLICE

STRUCTURAL STEEL NOTES

ALL STRUCTURAL STEEL SHALL BE AASHTO M270 GRADE 50W AND PAINTED IN ACCORDANCE WITH SYSTEM 4 OF ARTICLE 442-8 OF THE STANDARD SPECIFICATIONS UNLESS OTHERWISE NOTED ON THE PLANS.

ALL DIMENSIONS SHOWN ARE HORIZONTAL OR VERTICAL, UNLESS OTHERWISE NOTED.

ALL FIELD CONNECTIONS TO BE ⅞" DIA. HIGH STRENGTH BOLTS UNLESS OTHERWISE NOTED.

BEARING STIFFENERS ARE TO BE PLACED NORMAL TO THE WEB OF THE GIRDER AND SHALL BE PLUMB.

A CHARPY V-NOTCH TEST IS REQUIRED FOR WEB PLATES, BOTTOM FLANGE PLATES, BOTTOM FLANGE SPLICE PLATES AND WEB SPLICE PLATES (IF USED) FOR ALL GIRDERS AND IN ACCORDANCE WITH ARTICLE 1072-7 OF THE STANDARD SPECIFICATIONS.

ALL BEARING PLATES SHALL BE AASHTO M270 GRADE 50W.

PERMITTED FLANGE AND WEB SHOP SPLICES SHALL NOT BE LOCATED WITHIN 15 FEET OF MAXIMUM DEAD LOAD DEFLECTION (NOR WITHIN 15 FEET OF INTERMEDIATE BEARINGS OF CONTINUOUS UNITS). KEEP 2 FEET MINIMUM BETWEEN WEB AND FLANGE SHOP SPLICES. KEEP 6" MINIMUM BETWEEN CONNECTOR PLATE OR TRANSVERSE STIFFENER WELDS AND WEB OR FLANGE SHOP SPLICES.

STUDS ON GIRDERS MAY BE SHIFTED UP TO 1" IF NECESSARY TO CLEAR FLANGE SPLICE WELD.

WHEN FIELD WELDING THE SOLE PLATE TO THE GIRDER FLANGE, USE TEMPERATURE INDICATING WAX PENS, OR OTHER SUITABLE MEANS, TO ENSURE THAT THE TEMPERATURE OF THE SOLE PLATE DOES NOT EXCEED 300°F. TEMPERATURES ABOVE THIS MAY DAMAGE THE ELASTOMER.

ALL SURFACES OF BEARING PLATES SHALL BE SMOOTH AND STRAIGHT.

TENSION ON THE AASHTO M164 BOLTS SHALL BE CALIBRATED USING DIRECT TENSION INDICATOR WASHERS IN ACCORDANCE WITH ARTICLE 440-8 OF THE STANDARD SPECIFICATIONS.

END OF BEAMS AND GIRDERS SHALL BE PLUMB.

AT THE CONTRACTOR'S OPTION, THE DIAPHRAGM WITH THE WELDED GUSSET PLATES MAY BE USED IN LIEU OF THE DIAPHRAGM WITH BOLTED ANGLES AT NO ADDITIONAL COST TO THE DEPARTMENT.

FABRICATORS SHALL DETAIL DIAPHRAGM MEMBERS AND CONNECTIONS FOR FULL DEAD LOAD FIT UP. GIRDERS SHALL BE PLUMB AFTER THE FULL AMOUNT OF DEAD LOAD IS APPLIED.

STRUCTURAL STEEL ERECTION SHALL BE COMPLETE BEFORE FALSEWORK OR FORMS ARE PLACED ON THE UNIT.

PROJECT NO. R-2707B
CLEVELAND COUNTY
STATION: 252+73.29 -L-

NORTH CAROLINA PROFESSIONAL ENGINEER SEAL 12916 PAUL J. BARBER 6/28/12

STATE OF NORTH CAROLINA
DEPARTMENT OF TRANSPORTATION
RALEIGH

SUPERSTRUCTURE

FIELD SPLICE AND STRUCTURAL STEEL NOTES

LEFT LANE

HNTB
HNTB NORTH CAROLINA, P.C.
NC License No. C-1554
343 E. Six Forks Rd., Suite 200, Raleigh, N.C. 27609

DRAWN BY J. BAYNE DATE 5/12
CHECKED BY P. BARBER DATE 6/12
DWG. NO. 10

REVISIONS						SHEET NO.
NO.	BY	DATE	NO.	BY	DATE	S-76
1			3			TOTAL SHEETS
2			4			266

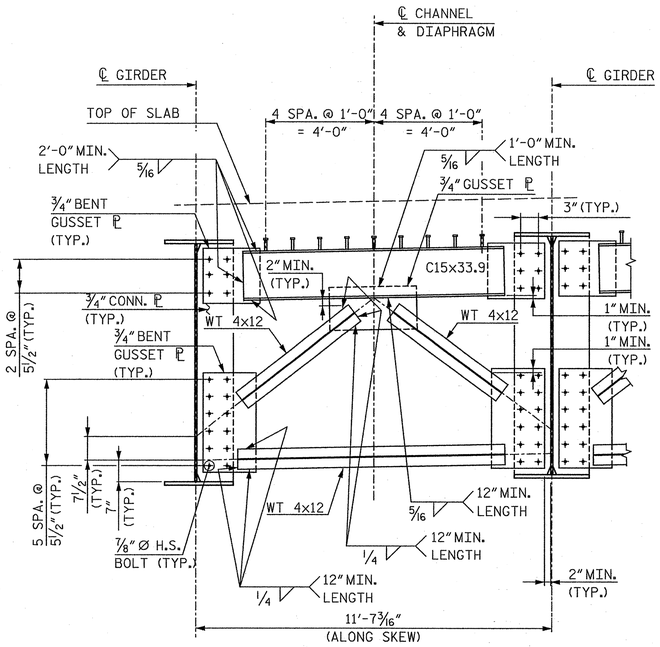

END BENT DIAPHRAGM (D1)

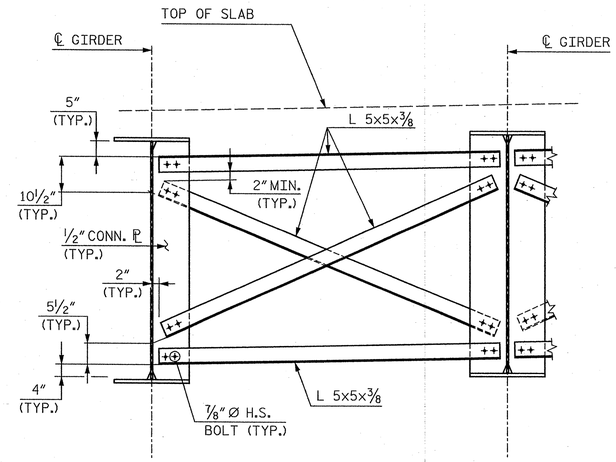

INTERMEDIATE DIAPHRAGM (D2)

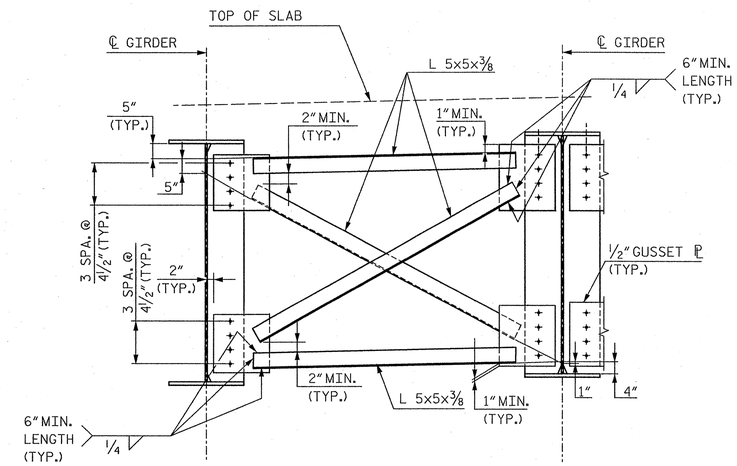

OPTIONAL INTERMEDIATE DIAPHRAGM (D2)

AT THE CONTRACTOR'S OPTION, THE DIAPHRAGM WITH THE WELDED GUSSET PLATES MAY BE USED IN LIEU OF THE DIAPHRAGM WITH THE BOLTED ANGLES AT NO ADDITIONAL COST TO THE DEPARTMENT.

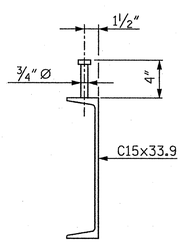

CHANNEL - SHEAR STUD DETAIL

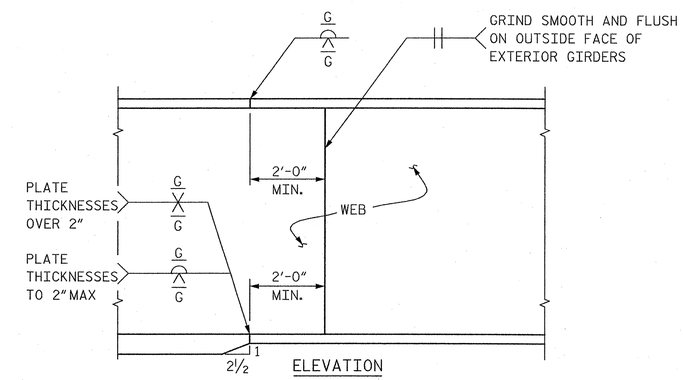

TYPICAL FLANGE AND WEB BUTT JOINT

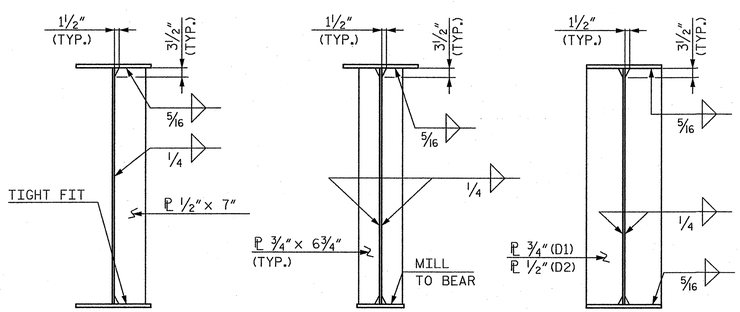

INTERMEDIATE STIFFENER

BEARING STIFFENER

CONNECTOR PLATE

STIFFENER & CONNECTOR ℙ DETAILS

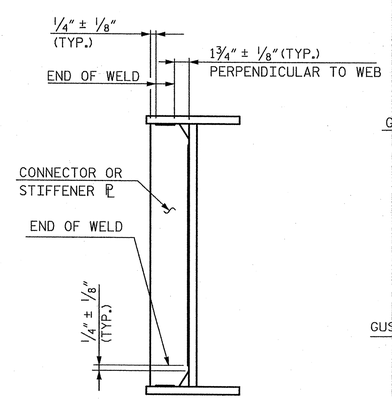

TYPICAL STIFFENER OR CONNECTOR PLATE CONNECTIONS

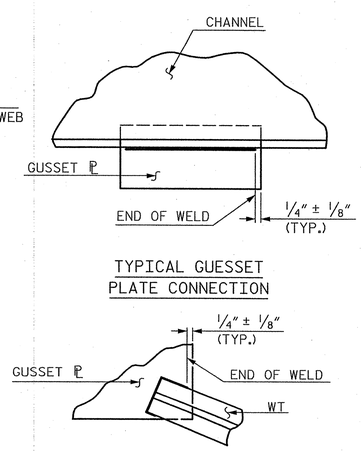

TYPICAL GUESSET PLATE CONNECTION

TYPICAL "TEE" TO GUSSET PLATE CONNECTION

WELD TERMINATION DETAILS

PROJECT NO. R-2707B

CLEVELAND COUNTY

STATION: 252+73.29 -L-

STATE OF NORTH CAROLINA
DEPARTMENT OF TRANSPORTATION
RALEIGH

SUPERSTRUCTURE

STRUCTURAL STEEL DETAILS

LEFT LANE

HNTB NORTH CAROLINA, P.C.
NC License No. C-1554
343 E. Six Forks Rd., Suite 200, Raleigh, N.C. 27609

DRAWN BY J. BAYNE DATE 6/12
CHECKED BY P. BARBER DATE 6/12
DWG. NO. 11

REVISIONS						SHEET NO.
NO.	BY	DATE	NO.	BY	DATE	S-77
1			3			TOTAL SHEETS
2			4			266

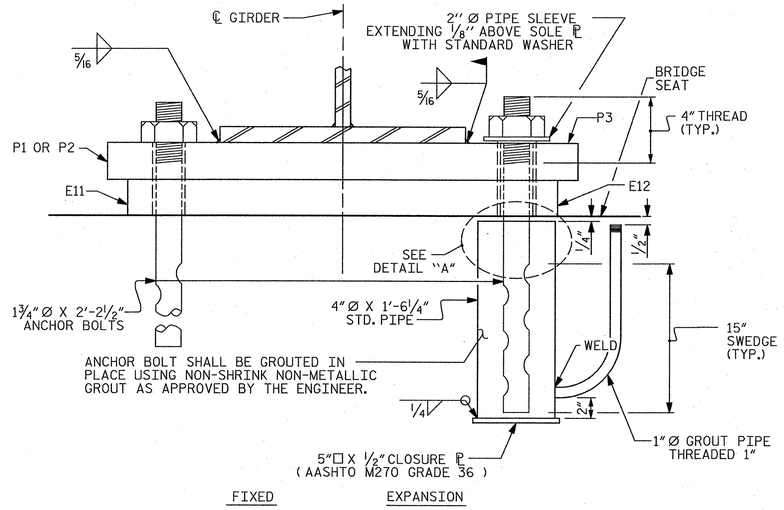

END VIEW

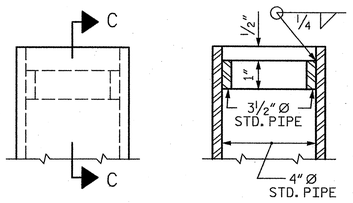

SECTION C-C

DETAIL "A"

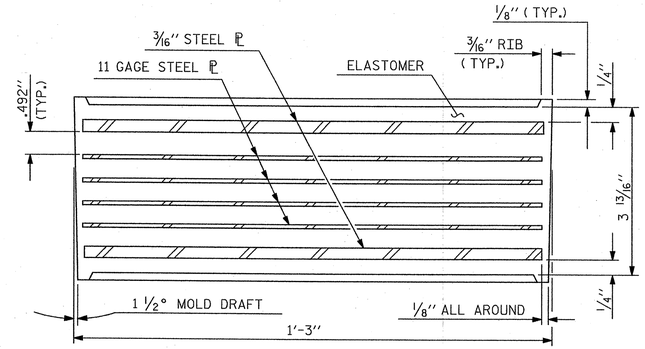

TYPICAL SECTION OF ELASTOMERIC BEARING

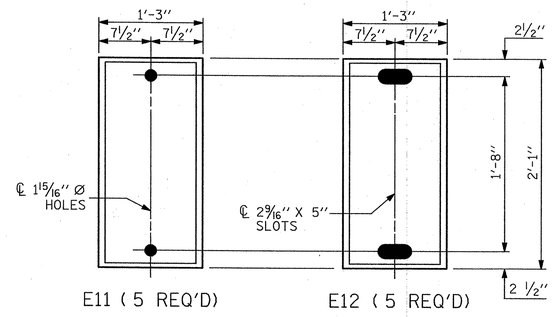

PLAN VIEW OF ELASTOMERIC BEARING

TYPE VI

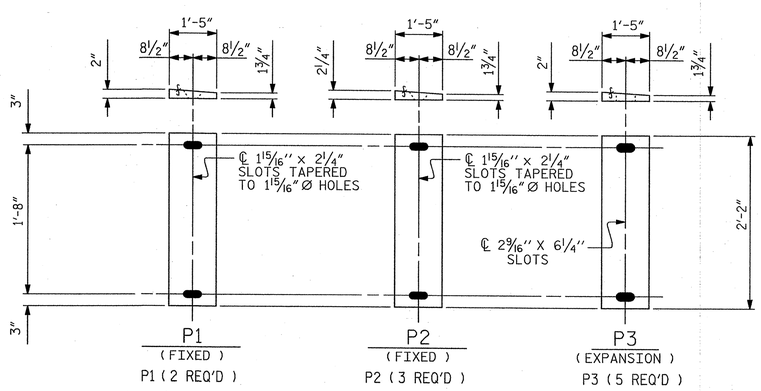

SOLE PLATE DETAILS ("P")

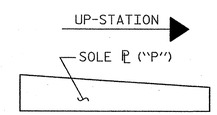

SOLE ℙ PLACEMENT DETAIL

NOTES

AT ALL FIXED POINTS OF SUPPORT, NUTS FOR ANCHOR BOLTS ARE TO BE TIGHTENED FINGER TIGHT AND THEN BACKED OFF ½ TURN. THE THREAD OF THE NUT AND BOLT SHALL THEN BE BURRED WITH A SHARP POINTED TOOL.

THE 2" Ø PIPE SLEEVE SHALL BE CUT FROM SCHEDULE 40 PVC PLASTIC PIPE. THE PVC PLASTIC PIPE SHALL MEET THE REQUIREMENTS OF ASTM D1785.

THE PAYMENT FOR THE PIPE SLEEVES SHALL BE INCLUDED IN THE SEVERAL PAY ITEMS.

~~FOR PAINTED STRUCTURAL STEEL (EXCLUDING AASHTO M270 GRADE 50W), SOLE PLATES, ANCHOR BOLTS, NUTS AND WASHERS SHALL BE GALVANIZED IN ACCORDANCE WITH THE STANDARD SPECIFICATIONS.~~

FOR AASHTO M270 GRADE 50W STRUCTURAL STEEL, SOLE PLATE SHALL BE AASHTO M270 GRADE 50W AND SHALL NOT BE GALVANIZED. ANCHOR BOLTS, NUTS AND WASHERS SHALL BE GALVANIZED IN ACCORDANCE WITH THE STANDARD SPECIFICATIONS.

ANCHOR BOLTS SHALL MEET THE REQUIREMENTS OF ASTM A449. NUTS SHALL MEET THE REQUIREMENTS OF AASHTO M291-DH OR AASHTO M292-2H. WASHERS SHALL MEET THE REQUIREMENTS OF AASHTO M293. SHOP DRAWINGS ARE NOT REQUIRED FOR ANCHOR BOLTS, NUTS AND WASHERS. SHOP INSPECTION IS REQUIRED.

WHEN FIELD WELDING THE SOLE PLATE TO THE GIRDER FLANGE, USE TEMPERATURE INDICATING WAX PENS, OR OTHER SUITABLE MEANS, TO ENSURE THAT THE TEMPERATURE OF THE SOLE PLATE DOES NOT EXCEED 300°F. TEMPERATURES ABOVE THIS MAY DAMAGE THE ELASTOMER.

ALL SURFACES OF BEARING PLATES SHALL BE SMOOTH AND STRAIGHT.

THE CLOSURE PLATE, GROUT PIPE AND STANDARD PIPE FOR THE EXPANSION ASSEMBLY NEED NOT BE GALVANIZED.

THE CONTRACTOR'S ATTENTION IS CALLED TO THE FOLLOWING PROCEDURE, WHICH MAY BE REQUIRED BY THE ENGINEER, TO RESET ELASTOMERIC BEARINGS DUE TO GIRDER TRANSLATION AND END ROTATION:

1. ONCE THE DECK HAS CURED, THE GIRDERS SHALL BE JACKED AND THEN THE ANCHOR BOLTS, AND ELASTOMERIC BEARING SLOTS CENTERED AS NEARLY AS PRACTICAL ABOUT THE BEARING STIFFENER. THIS OPERATION SHALL BE PERFORMED AT APPROXIMATELY 60° F.
2. AFTER CENTERING THE ELASTOMERIC BEARING SLOTS AND ANCHOR BOLTS, THE ANCHOR BOLTS SHALL BE GROUTED.

   THE CONTRACTOR MAY PROPOSE ALTERNATE METHODS, PROVIDED DETAILS ARE SUBMITTED TO THE ENGINEER FOR REVIEW AND APPROVAL.

—LOAD RATINGS—	
	MAX.D.L.+ L.L.
TYPE VI	262 k

PROJECT NO. R-2707B

CLEVELAND COUNTY

STATION: 252+73.29 -L-

NORTH CAROLINA PROFESSIONAL SEAL 12916 ENGINEER PAUL J. BARBER 6/20/12

STATE OF NORTH CAROLINA
DEPARTMENT OF TRANSPORTATION
RALEIGH

STANDARD

ELASTOMERIC BEARING DETAILS

(STEEL SUPERSTRUCTURE)

LEFT LANE

ASSEMBLED BY : J. BAYNE	DATE : 5/12		
CHECKED BY : P. BARBER	DATE : 6/12		
DRAWN BY : EEM 10/95	REV. 7/10/01	LES/RDR	
CHECKED BY : PEK 10/95	REV. 5/1/06	TLA/GM	
	REV. 10/1/11	MAA/GM	

HNTB
HNTB NORTH CAROLINA, P.C.
NC License No. C-1554
343 E. Six Forks Rd., Suite 200, Raleigh, N.C. 27609

DRAWN BY J. BAYNE DATE 5/12
CHECKED BY P. BARBER DATE 6/12
DWG. NO. 12

REVISIONS						SHEET NO.
NO.	BY:	DATE:	NO.	BY:	DATE:	S-78
1			3			TOTAL SHEETS
2			4			266

STD. NO. EB2

DEAD LOAD DEFLECTION AND CAMBER TABLE FOR GIRDERS 1 & 5

	SPAN A																					
	GIRDERS 1 & 5																					
TWENTIETH POINTS	0	.05	.10	.15	FS	.20	.25	.30	.35	.40	.45	.50	.55	.60	.65	.70	.75	.80	.85	.90	.95	1.00
DEFLECTION DUE TO WEIGHT OF STEEL ↓	0.000	0.025	0.050	0.073	0.090	0.093	0.111	0.127	0.139	0.148	0.153	0.155	0.153	0.148	0.139	0.127	0.111	0.093	0.073	0.050	0.025	0.000
DEFLECTION DUE TO WEIGHT OF SLAB * ↓	0.000	0.063	0.128	0.188	0.232	0.242	0.290	0.330	0.362	0.385	0.400	0.404	0.400	0.385	0.362	0.330	0.290	0.242	0.188	0.128	0.063	0.000
DEFLECTION DUE TO WEIGHT OF RAIL ↓	0.000	0.008	0.015	0.022	0.027	0.028	0.033	0.038	0.041	0.044	0.046	0.046	0.046	0.044	0.041	0.038	0.033	0.028	0.022	0.015	0.008	0.000
TOTAL DEAD LOAD DEFLECTION ↓	0.000	0.096	0.193	0.283	0.349	0.363	0.434	0.495	0.542	0.577	0.599	0.605	0.599	0.577	0.542	0.495	0.434	0.363	0.283	0.193	0.096	0.000
VERTICAL CURVE ORDINATE FOR CAMBER ↑	0.000	0.020	0.037	0.053	0.063	0.066	0.077	0.087	0.094	0.099	0.102	0.103	0.102	0.099	0.094	0.087	0.077	0.066	0.053	0.037	0.020	0.000
REQUIRED CAMBER ↑	0	1 3/8	2 3/4	4 1/16	4 15/16	5 1/8	6 1/8	7	7 5/8	8 1/8	8 7/16	8 1/2	8 7/16	8 1/8	7 5/8	7	6 1/8	5 1/8	4 1/16	2 3/4	1 3/8	0

DEAD LOAD DEFLECTION AND CAMBER TABLE FOR GIRDERS 2 & 4

	SPAN A																					
	GIRDERS 2 & 4																					
TWENTIETH POINTS	0	.05	.10	.15	FS	.20	.25	.30	.35	.40	.45	.50	.55	.60	.65	.70	.75	.80	.85	.90	.95	1.00
DEFLECTION DUE TO WEIGHT OF STEEL ↓	0.000	0.025	0.050	0.073	0.090	0.093	0.111	0.127	0.139	0.148	0.153	0.155	0.153	0.148	0.139	0.127	0.111	0.093	0.073	0.050	0.025	0.000
DEFLECTION DUE TO WEIGHT OF SLAB * ↓	0.000	0.063	0.127	0.187	0.231	0.241	0.288	0.328	0.360	0.383	0.397	0.402	0.397	0.383	0.360	0.328	0.288	0.241	0.187	0.127	0.063	0.000
DEFLECTION DUE TO WEIGHT OF RAIL ↓	0.000	0.008	0.015	0.022	0.027	0.028	0.033	0.038	0.041	0.044	0.046	0.046	0.046	0.044	0.041	0.038	0.033	0.028	0.022	0.015	0.008	0.000
TOTAL DEAD LOAD DEFLECTION ↓	0.000	0.096	0.192	0.282	0.348	0.362	0.432	0.493	0.540	0.575	0.596	0.603	0.596	0.575	0.540	0.493	0.432	0.362	0.282	0.192	0.096	0.000
VERTICAL CURVE ORDINATE FOR CAMBER ↑	0.000	0.020	0.037	0.053	0.063	0.066	0.077	0.087	0.094	0.099	0.102	0.103	0.102	0.099	0.094	0.087	0.077	0.066	0.053	0.037	0.020	0.000
REQUIRED CAMBER ↑	0	1 3/8	2 3/4	4	4 15/16	5 1/8	6 1/8	6 15/16	7 5/8	8 1/16	8 3/8	8 1/2	8 3/8	8 1/16	7 5/8	6 15/16	6 1/8	5 1/8	4	2 3/4	1 3/8	0

DEAD LOAD DEFLECTION AND CAMBER TABLE FOR GIRDER 3

	SPAN A																					
	GIRDER 3																					
TWENTIETH POINTS	0	.05	.10	.15	FS	.20	.25	.30	.35	.40	.45	.50	.55	.60	.65	.70	.75	.80	.85	.90	.95	1.00
DEFLECTION DUE TO WEIGHT OF STEEL ↓	0.000	0.025	0.050	0.073	0.090	0.093	0.111	0.127	0.139	0.148	0.153	0.155	0.153	0.148	0.139	0.127	0.111	0.093	0.073	0.050	0.025	0.000
DEFLECTION DUE TO WEIGHT OF SLAB * ↓	0.000	0.063	0.127	0.186	0.230	0.239	0.286	0.326	0.358	0.381	0.395	0.400	0.395	0.381	0.358	0.326	0.286	0.239	0.186	0.127	0.063	0.000
DEFLECTION DUE TO WEIGHT OF RAIL ↓	0.000	0.008	0.015	0.022	0.027	0.028	0.033	0.038	0.041	0.044	0.046	0.046	0.046	0.044	0.041	0.038	0.033	0.028	0.022	0.015	0.008	0.000
TOTAL DEAD LOAD DEFLECTION ↓	0.000	0.096	0.192	0.281	0.347	0.360	0.430	0.491	0.538	0.573	0.594	0.601	0.594	0.573	0.538	0.491	0.430	0.360	0.281	0.192	0.096	0.000
VERTICAL CURVE ORDINATE FOR CAMBER ↑	0.000	0.020	0.037	0.053	0.063	0.066	0.077	0.087	0.094	0.099	0.102	0.103	0.102	0.099	0.094	0.087	0.077	0.066	0.053	0.037	0.020	0.000
REQUIRED CAMBER ↑	0	1 3/8	2 3/4	4	4 15/16	5 1/8	6 1/16	6 15/16	7 9/16	8 1/16	8 3/8	8 7/16	8 3/8	8 1/16	7 9/16	6 15/16	6 1/16	5 1/8	4	2 3/4	1 3/8	0

* INCLUDES SLAB, BUILDUPS & STAY-IN-PLACE FORMS.

ALL VALUES ARE SHOWN IN FEET (DECIMAL FORM), EXCEPT " REQUIRED CAMBER ", WHICH IS GIVEN IN INCHES (FRACTION FORM).

FS DENOTES FIELD SPLICE LOCATION

TWENTIETH POINTS ARE TAKEN FROM ℄ BEARING TO ℄ BEARING.

SLOPE FOR THE ZERO CAMBER BASELINE VARIES

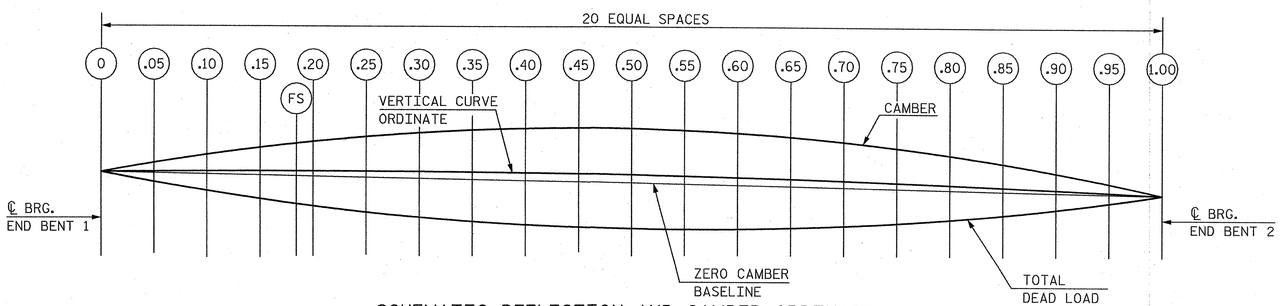

SCHEMATIC DEFLECTION AND CAMBER ORDINATES

PROJECT NO. R-2707B

CLEVELAND COUNTY

STATION: 252+73.29 -L-

NORTH CAROLINA PROFESSIONAL SEAL 12916 ENGINEER PAUL J. BARBER 6/25/12

STATE OF NORTH CAROLINA
DEPARTMENT OF TRANSPORTATION
RALEIGH

SUPERSTRUCTURE
GIRDER
DEAD LOAD DEFLECTIONS AND CAMBER
LEFT LANE

HNTB NORTH CAROLINA, P.C.
NC License No. C-1554
343 E. Six Forks Rd., Suite 200, Raleigh, N.C. 27609

DRAWN BY J. BAYNE DATE 6/12
CHECKED BY P. BARBER DATE 6/12
DWG. NO. 13

REVISIONS						SHEET NO.
NO.	BY	DATE	NO.	BY	DATE	S-79
1			3			TOTAL SHEETS
2			4			222

NOTES

THE BARRIER RAIL IN EACH SPAN SHALL NOT BE CAST UNTIL ALL SLAB CONCRETE IN THAT SPAN HAS BEEN CAST AND HAS REACHED A MINIMUM COMPRESSIVE STRENGTH OF 3,000 PSI.

~~WHEN EVAZOTE JOINT SEAL IS REQUIRED, THE JOINT IN THE DECK SHALL BE SAWED PRIOR TO THE CASTING OF BARRIER RAIL.~~

ALL REINFORCING STEEL IN BARRIER RAILS SHALL BE EPOXY COATED.

~~THE #5 S3 AND #5 S4 BARS SHALL BE INSTALLED, USING AN ADHESIVE ANCHORING SYSTEM, AFTER SAWING THE JOINT. THE YIELD LOAD FOR THE #5 S3 AND #5 S4 BARS IS 18.6 KIPS. FIELD TESTING FOR THE ADHESIVE BONDING SYSTEM IS NOT REQUIRED.~~

GROOVED CONTRACTION JOINTS, 1/2" IN DEPTH, SHALL BE TOOLED IN ALL EXPOSED FACES OF THE BARRIER RAIL AND IN ACCORDANCE WITH ARTICLE 825-10(B) OF THE STANDARD SPECIFICATIONS. THE CONTRACTION JOINT SHALL BE LOCATED AT EACH THIRD POINT BETWEEN BARRIER RAIL EXPANSION JOINTS. ONLY ONE CONTRACTION JOINT IS REQUIRED AT MIDPOINT OF BARRIER RAIL SEGMENTS LESS THAN 20 FEET IN LENGTH AND NO CONTRACTION JOINTS ARE REQUIRED FOR THOSE SEGMENTS LESS THAN 10 FEET IN LENGTH.

BAR TYPES

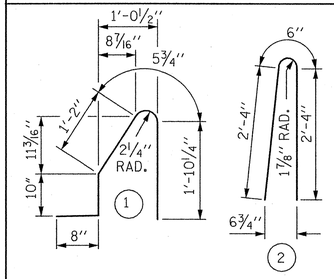

ALL BAR DIMENSIONS ARE OUT TO OUT

BILL OF MATERIAL

FOR CONCRETE BARRIER RAIL ONLY

BAR	NO.	SIZE	TYPE	LENGTH	WEIGHT
* B1	80	#5	STR.	26'-5"	2,204
* B2	16	#5	STR.	27'-1"	452
* S1	322	#5	1	5'-0"	1,679
* S2	322	#5	2	5'-2"	1,735

* EPOXY COATED REINFORCING STEEL	6,070 LBS.
CLASS AA CONCRETE	32.5 CU. YDS.
CONCRETE BARRIER RAIL	324.6 LIN. FT.

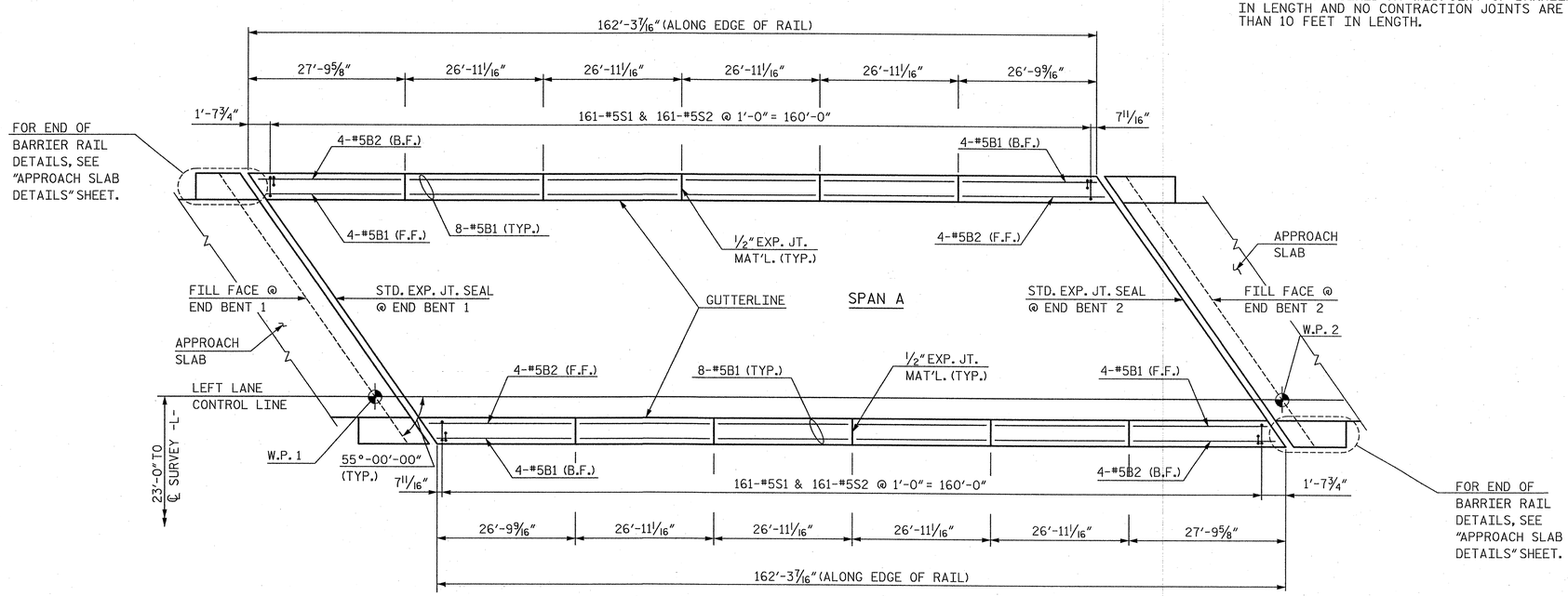

PLAN OF BARRIER RAIL

NOTE: EDGE OF SLAB NOT SHOWN FOR CLARITY.

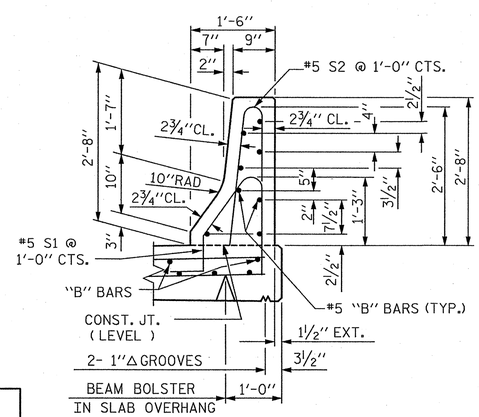

SECTION THRU RAIL

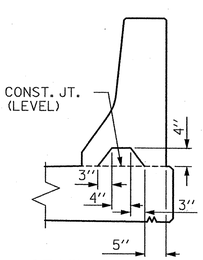

SECTION S-S

AT DAM IN OPEN JOINT (THIS IS TO BE USED ONLY WHEN SLIP FORM IS USED)

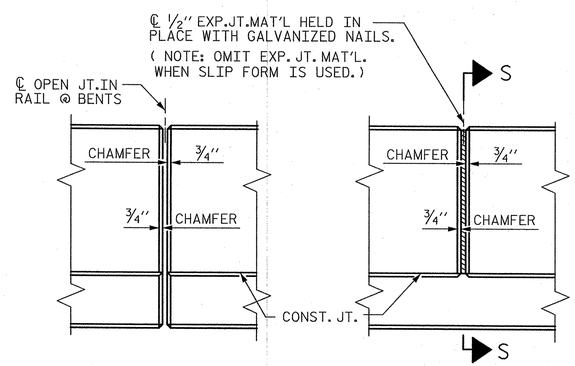

ELEVATION AT EXPANSION JOINTS

BARRIER RAIL DETAILS

PROJECT NO. R-2707B

CLEVELAND COUNTY

STATION: 252+73.29 -L-

STATE OF NORTH CAROLINA
DEPARTMENT OF TRANSPORTATION
RALEIGH

STANDARD

CONCRETE BARRIER RAIL

LEFT LANE

ASSEMBLED BY : J. BAYNE	DATE : 5/12		
CHECKED BY : D. RAGAN	DATE : 5/12		
DRAWN BY : ARB 5/87	REV. 5/7/03R	RWW/JTE	
CHECKED BY : SJD 9/87	REV. 5/1/06R	TLA/GM	
	REV. 10/1/11	MAA/GM	

HNTB

HNTB NORTH CAROLINA, P.C.
NC License No. C-1554
343 E. Six Forks Rd., Suite 200, Raleigh, N.C. 27609

DRAWN BY J. BAYNE DATE 5/12
CHECKED BY D. RAGAN DATE 5/12

DWG. NO. 14

REVISIONS

NO.	BY:	DATE:	NO.	BY:	DATE:
1			3		
2			4		

SHEET NO. S-80

TOTAL SHEETS 266

STD. NO. CBR1

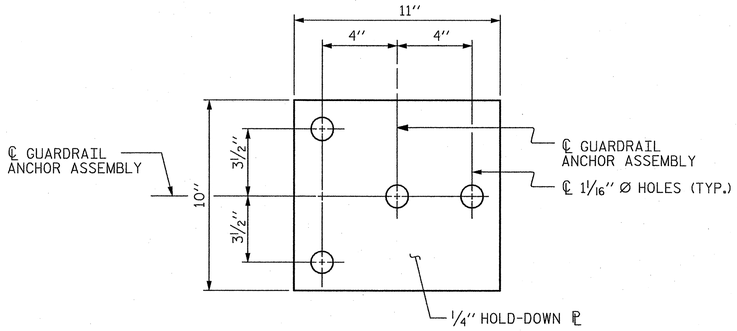

PLAN

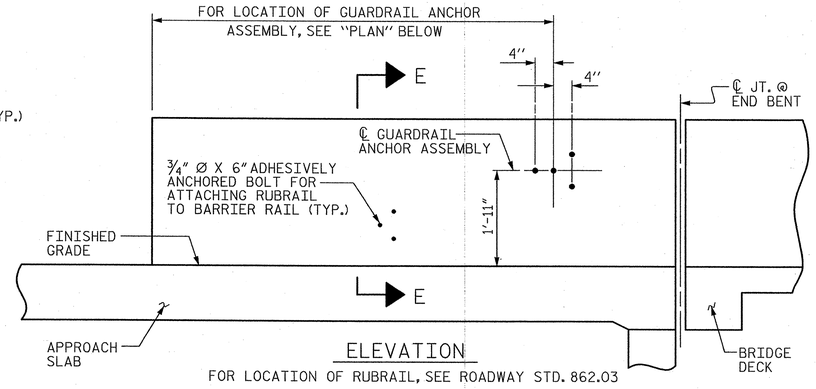

ELEVATION

FOR LOCATION OF RUBRAIL, SEE ROADWAY STD. 862.03

NOTES

THE GUARDRAIL ANCHOR ASSEMBLY SHALL CONSIST OF A 1/4" HOLD-DOWN PLATE AND 4 - 7/8" Ø BOLTS WITH NUTS AND WASHERS, RUBRAIL, AND ADHESIVELY ANCHORED BOLTS.

THE HOLD-DOWN PLATE SHALL CONFORM TO AASHTO M270 GRADE 36. AFTER FABRICATION, THE HOLD-DOWN PLATE SHALL BE HOT-DIP GALVANIZED IN ACCORDANCE WITH AASHTO M111.

BOLTS SHALL CONFORM TO THE REQUIREMENTS OF ASTM A307 AND NUTS SHALL CONFORM TO THE REQUIREMENTS OF AASHTO M291. BOLTS, NUTS AND WASHERS SHALL BE GALVANIZED. (AT THE CONTRACTOR'S OPTION, STAINLESS STEEL BOLTS, NUTS AND WASHERS MAY BE USED AS AN ALTERNATE FOR THE 7/8" Ø GALVANIZED BOLTS, NUTS AND WASHERS. THEY SHALL CONFORM TO OR EXCEED THE MECHANICAL REQUIREMENTS OF ASTM A307. THE USE OF THIS ALTERNATE SHALL BE APPROVED BY THE ENGINEER.)

THE GUARDRAIL ANCHOR ASSEMBLY IS REQUIRED AT ALL POINTS WHERE APPROACH GUARDRAIL IS TO BE ATTACHED TO THE END OF BARRIER RAIL. FOR POINTS OF ATTACHMENT, SEE SKETCH.

AFTER INSTALLATION, THE EXPOSED THREAD OF THE BOLT SHALL BE BURRED WITH A SHARP POINTED TOOL.

THE COST OF THE GUARDRAIL ANCHOR ASSEMBLY SHALL BE INCLUDED IN THE UNIT CONTRACT PRICE BID FOR CONCRETE BARRIER RAIL.

THE 1 1/4" Ø HOLES SHALL BE FORMED OR DRILLED WITH A CORE BIT. IMPACT TOOLS WILL NOT BE PERMITTED. ANY CONCRETE DAMAGED BY THIS WORK SHALL BE REPAIRED TO THE SATISFACTION OF THE ENGINEER.

THE C6 X 8.2 RUBRAIL IS TO BE ADHESIVELY ANCHORED TO THE RAIL USING THREE 3/4" Ø X 6" BOLTS WITH WASHERS. LEVEL ONE FIELD TESTING IS REQUIRED, AND THE YIELD LOAD OF THE 3/4" Ø BOLT IS 12 KIPS. FOR ADHESIVELY ANCHORED ANCHOR BOLTS OR DOWELS, SEE STANDARD SPECIFICATIONS. SEE ROADWAY STANDARD 862.03 FOR DETAILS AND LOCATION OF THE RUBRAIL.

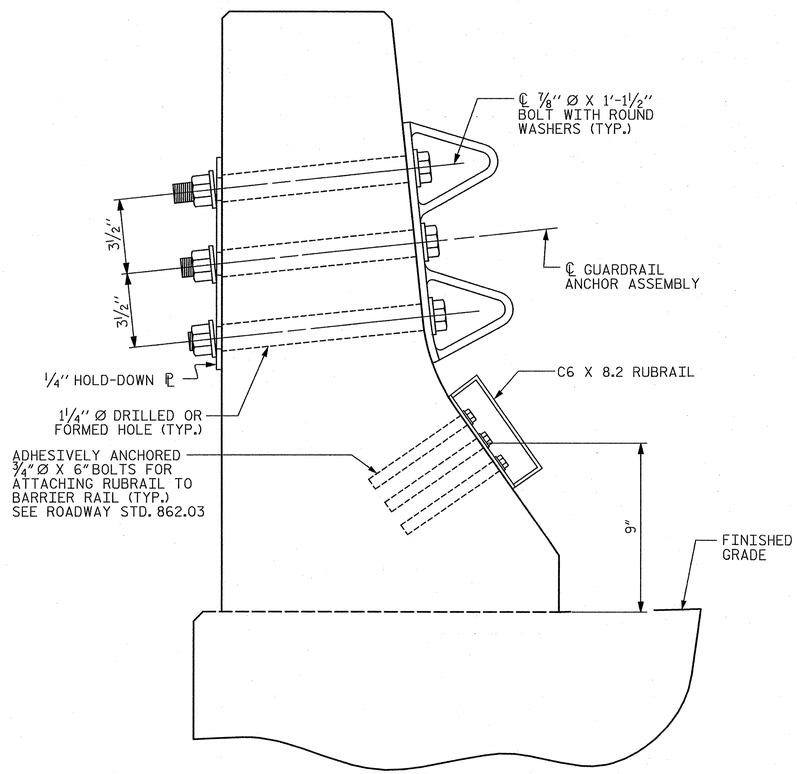

SECTION E-E

GUARDRAIL ANCHOR ASSEMBLY DETAILS

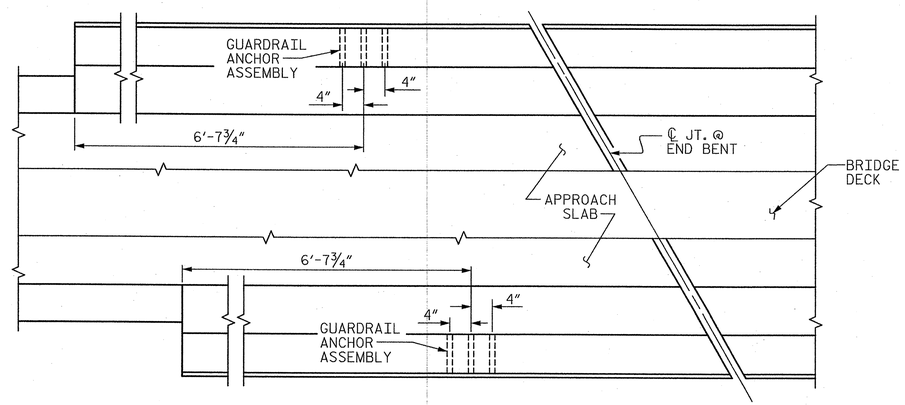

PLAN

LOCATION OF ANCHORS FOR GUARDRAIL

END BENT #1 SHOWN, END BENT #2 SIMILAR.

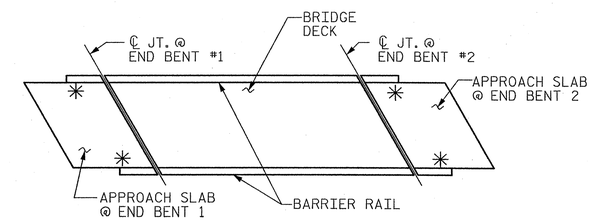

SKETCH SHOWING POINTS OF ATTACHMENTS

✳ DENOTES GUARDRAIL ANCHOR ASSEMBLY (4 REQ'D)

PROJECT NO. R-2707B

CLEVELAND COUNTY

STATION: 252+73.29 -L-

NORTH CAROLINA PROFESSIONAL SEAL 12916 ENGINEER PAUL J. BARBER 8/28/12

STATE OF NORTH CAROLINA
DEPARTMENT OF TRANSPORTATION
RALEIGH

STANDARD

GUARDRAIL ANCHORAGE FOR BARRIER RAIL

LEFT LANE

ASSEMBLED BY : J. BAYNE	DATE : 5/12		
CHECKED BY : D. RAGAN	DATE : 5/12		
DRAWN BY : TLA 5/06	ADDED 5/1/06RR KMM/GM		
CHECKED BY : GM 5/06	REV. 10/1/11 MAA/GM		

HNTB

HNTB NORTH CAROLINA, P.C.
NC License No. C-1554
343 E. Six Forks Rd., Suite 200, Raleigh, N.C. 27609

DRAWN BY J. BAYNE DATE 5/12
CHECKED BY D. RAGAN DATE 5/12

DWG. NO. 15

REVISIONS						SHEET NO.
NO.	BY	DATE	NO.	BY	DATE	S-81
1			3			TOTAL SHEETS
2			4			266

STD. NO. CBA2

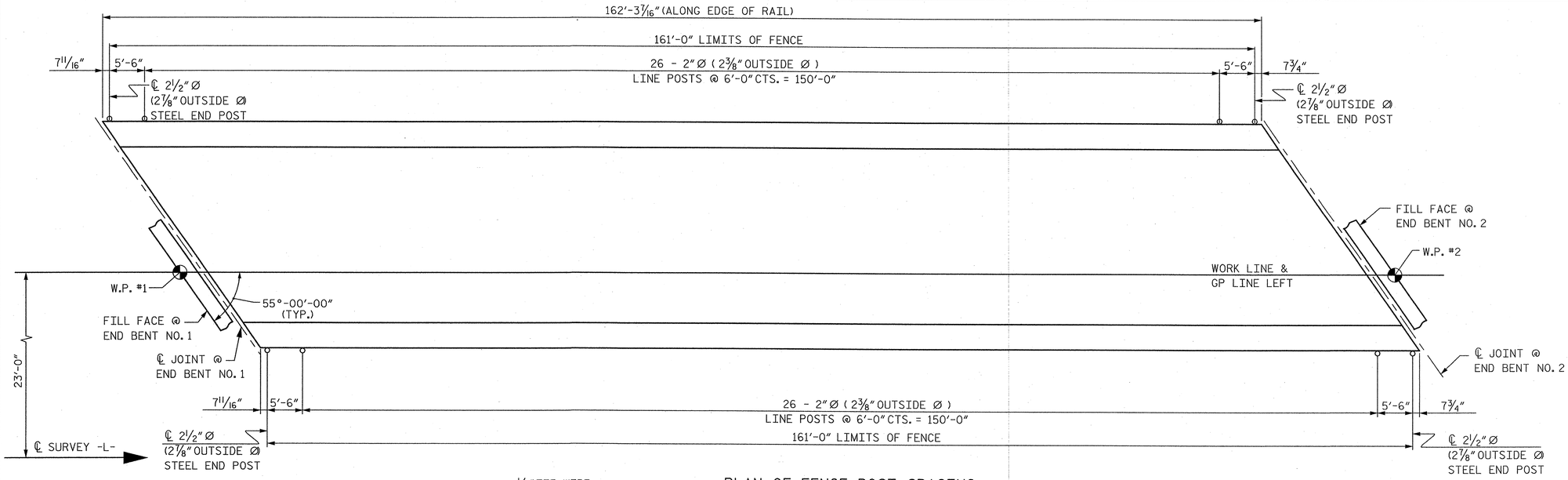

PLAN OF FENCE POST SPACING

(PAY LENGTH 322.00 FEET)

NOTE: EDGE OF SLAB NOT SHOWN FOR CLARITY.

NOTES:

FOR 72" CHAIN LINK FENCE, SEE SPECIAL PROVISIONS.

MATERIAL FOR ANCHOR BOLTS SHALL BE TYPE 304 STAINLESS STEEL WITH A MINIMUM 9000 PSI ULTIMATE STRENGTH. NUTS AND WASHERS SHALL BE TYPE 304 STAINLESS STEEL. ANCHOR BOLTS SHALL BE EMBEDDED AS PER ADHESIVE BONDING SYSTEM MANUFACTURER SPECIFICATIONS. NUTS SHALL BE AMERICAN STANDARD FINISHED HEXAGON THICK NUTS, CLASS 2B THREADS.

FOR SETTING ANCHOR BOLTS, THE CONTRACTOR SHALL USE AN ADHESIVE BONDING SYSTEM. SEE SPECIAL PROVISIONS FOR ADHESIVELY ANCHORED ANCHOR BOLTS OR DOWELS. LEVEL ONE FIELD TESTING OF BONDING SYSTEM IS REQUIRED AND THE YIELD LOAD OF THE 3/4" Ø BOLTS IS 12.0 KIPS.

ALL FENCE MATERIAL SHALL MEET THE REQUIREMENTS OF SECTION 1050 OF THE STANDARD SPECIFICATIONS, GALVANIZE ALL STEEL PARTS AND HARDWARE IN ACCORDANCE WITH ARTICLE 1076 OF THE STANDARD SPECIFICATIONS.

FENCE POST LOCATIONS SHALL BE SHIFTED, AS NECESSARY, TO MAINTAIN 12" MINIMUM DISTANCE FROM ANCHOR BOLT TO JOINTS IN BARRIER RAIL.

DIMENSIONS ARE SHOWN ALONG OUTSIDE FACE OF BARRIER RAIL.

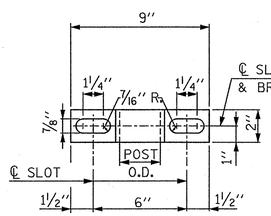

ELEVATION

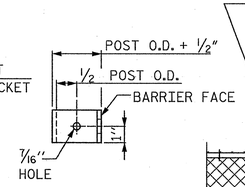

SIDE VIEW

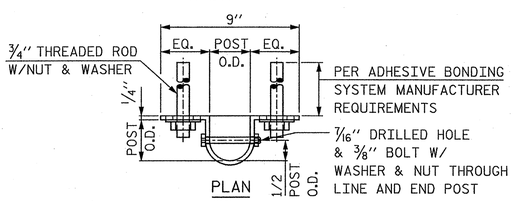

TOP POST BRACKET

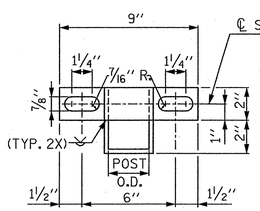

ELEVATION

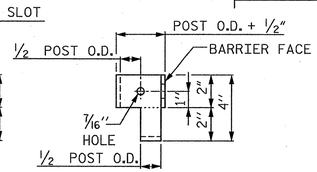

RIGHT SIDE VIEW

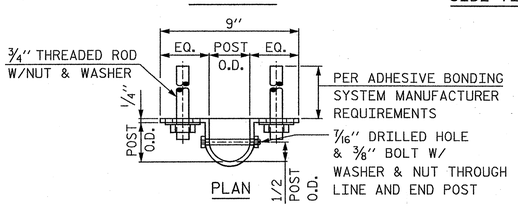

BOTTOM POST BRACKET

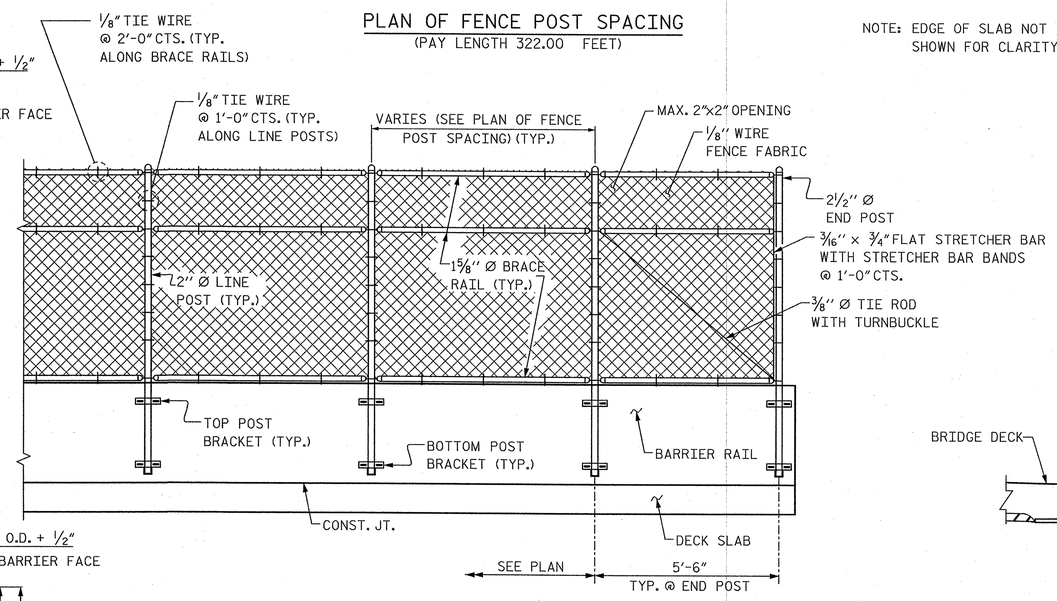

PARTIAL ELEVATION

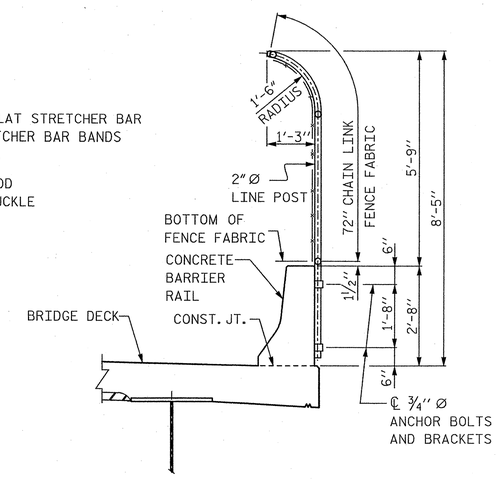

SECTION THRU FENCE

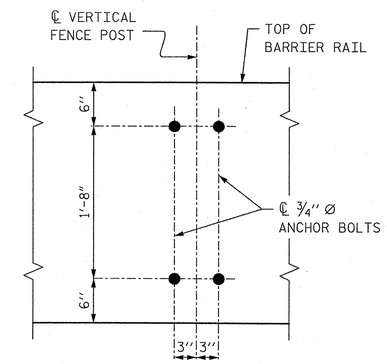

BOLT SETTING DETAIL

PROJECT NO. R-2707B

CLEVELAND COUNTY

STATION: 252+73.29 -L-

NORTH CAROLINA PROFESSIONAL SEAL 12916 ENGINEER PAUL J. BARBER 5/16/12

STATE OF NORTH CAROLINA
DEPARTMENT OF TRANSPORTATION
RALEIGH

SUPERSTRUCTURE

BRIDGE MOUNTED
CHAIN LINK FENCE
DETAILS

LEFT LANE

HNTB NORTH CAROLINA, P.C.
NC License No. C-1554
343 E. Six Forks Rd., Suite 200, Raleigh, N.C. 27609

DRAWN BY J. BAYNE DATE 5/12
CHECKED BY D. RAGAN DATE 5/12

DWG. NO. 16

REVISIONS						SHEET NO.
NO.	BY	DATE	NO.	BY	DATE	S-82
1			3			TOTAL SHEETS
2			4			266

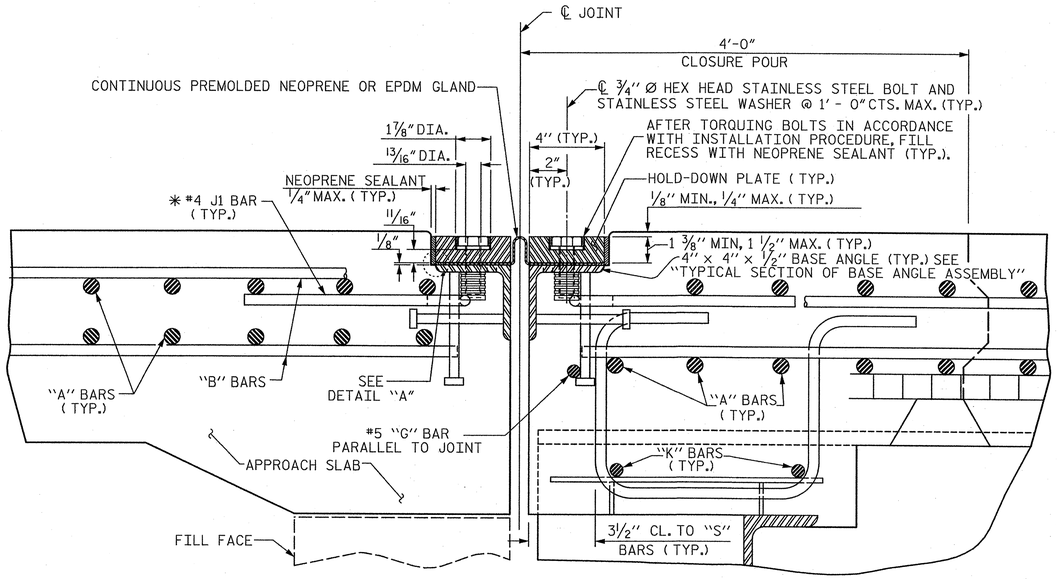

EXPANSION JOINT DETAILS

SECTION NORMAL TO JOINT -- STEEL SUPERSTRUCTURE

✳ THE QUANTITY OF #4 J1 BARS ON THE BILL OF MATERIAL IS BASED ON 1'-0" CENTERS. J1 BARS SHALL BE PLACED AT EACH VERTICAL STUD ANCHOR BOLT. IN THE EVENT THAT THE NUMBER OF VERTICAL STUD ANCHORS EXCEEDS THE NUMBER OF J1 BARS SPECIFIED, ADDITIONAL J1 BARS WILL NOT BE REQUIRED.

INSTALLATION PROCEDURE

1. A TEMPLATE OR OTHER SUITABLE DEVICE SHALL BE USED TO FORM THE TOP OF THE EXPANSION JOINT SEAL BLOCKOUT TO THE PROPER DEPTH AND WIDTH. THE TEMPLATE SHALL BE 4⅛" TO 4¼" WIDE AND OF SUCH THICKNESS AS TO PROVIDE FOR CORRECT FINAL ELEVATION OF TOP OF HOLD-DOWN PLATES. THE TEMPLATE SHALL BE ATTACHED TO THE BASE ANGLE ASSEMBLY WITH THE ¾" Ø HEX HEAD BOLTS PROVIDED FOR THE HOLD-DOWN PLATES. A 1" Ø HOLE SHALL BE PROVIDED IN THE TEMPLATE CENTERED OVER EACH WEEP HOLE IN THE 4" X 4" X ½" BASE ANGLE. OTHER METHODS OF INSURING DRAINAGE THROUGH WEEP HOLES MAY BE EMPLOYED SUBJECT TO ENGINEER'S APPROVAL.
2. AFTER THE CONCRETE HAS BEEN CAST ON BOTH SIDES OF THE JOINT, REMOVE THE TEMPLATE. THOROUGHLY CLEAN THE BOLT HOLES AND THE ANGLE PLATE. REMOVE ANY EXCESS CONCRETE THAT COMES OUT OF THE WEEP HOLES. ANY DAMAGED STEEL SHALL BE COATED WITH A MINIMUM THICKNESS OF 4 DRY MILS OF ZINC-RICH PAINT IN ACCORDANCE WITH THE STANDARD SPECIFICATIONS.
3. LAY THE GLAND ON THE BASE ANGLE AND FIELD MARK THE GLAND FOR THE BOLT HOLES. HOLES IN THE GLAND SHALL BE PUNCHED ⅞" IN DIAMETER WITH A HAND PUNCH.
4. IN ORDER TO CHECK FOR PROPER ALIGNMENT, PLACE THE GLAND AND HOLD-DOWN PLATES ON THE BASE ANGLE. DO NOT APPLY NEOPRENE SEALANT. BOLT THE HOLD-DOWN PLATES TO THE BASE ANGLE BUT DO NOT TIGHTEN. THE ENGINEER SHALL INSPECT THE JOINT SEAL DEVICE FOR PROPER ALIGNMENT.
5. AFTER INSPECTION, REMOVE THE HOLD-DOWN PLATES AND GLAND. APPLY NEOPRENE SEALANT TO THE BASE ANGLE IN ACCORDANCE WITH THE "INSTALLATION SKETCH". PLACE GLAND AND HOLD-DOWN PLATES ON THE BASE ANGLE. BOLT THE HOLD-DOWN PLATES TO THE BASE ANGLE ASSEMBLY AND TORQUE THE BOLTS TO 88 FT-LBS WITH A TORQUE WRENCH. CHECK THE TORQUE AFTER THREE (3) HOURS AND, IF NECESSARY, RETIGHTEN TO 88 FT-LBS. A FINAL CHECK SHALL BE MADE AT SEVEN (7) DAYS. TORQUE SHALL NOT BE LESS THAN 80 FT-LBS AFTER SEVEN (7) DAYS.
6. AFTER PROPER TORQUING, CLEAN THE BOLT HOLE RECESSES AND THE RECESS BETWEEN THE JOINT SEAL DEVICE AND CONCRETE, COMPLETELY FILL THESE RECESSES WITH NEOPRENE SEALANT.

GENERAL NOTES

1. FOR EXPANSION JOINT SEALS, SEE SPECIAL PROVISIONS.
2. ALL PLATES AND ANGLES SHALL CONFORM TO AASHTO M270 GRADE 36 STEEL OR APPROVED EQUAL. ALL HOLD-DOWN BOLTS SHALL CONFORM TO ASTM F593 ALLOY 304 STAINLESS STEEL AND WASHERS SHALL CONFORM TO ASTM F844 EXCEPT THEY SHALL BE MADE FROM ALLOY 304 STAINLESS STEEL. ALL STUD ANCHORS SHALL CONFORM TO AASHTO M169, GRADES 1010 THRU 1020 OR APPROVED EQUAL. ALL CONCRETE INSERTS SHALL BE CLOSED END AND SHALL CONFORM TO AASHTO M169, GRADE 12L14. TENSILE CAPACITY SHALL BE 3000 LBS. MIN.
3. A PREMOLDED CORRUGATED OR NON-CORRUGATED GLAND SHALL BE USED FOR JOINTS SKEWED BETWEEN 50° THRU 130°. FOR JOINTS SKEWED LESS THAN 50° OR MORE THAN 130°, ONLY A CORRUGATED GLAND SHALL BE USED.
4. CLOSED END FERRULES AND STUD ANCHORS SHALL BE SHOP WELDED AND ALL HOLES SHALL BE SHOP DRILLED AS SHOWN ON PLANS. STUD ANCHORS SHALL BE ELECTRIC ARC END WELDED WITH COMPLETE FUSION.
5. SURFACES COMING IN CONTACT WITH NEOPRENE SHALL BE GROUND SMOOTH PRIOR TO METALLIZING.
6. UPON COMPLETION OF SHOP FABRICATION, THE HOLD DOWN PLATE AND BASE ANGLE ASSEMBLY, AS SHOWN IN THE "TYPICAL SECTION OF BASE ANGLE ASSEMBLY", SHALL BE METALLIZED. SEE SPECIAL PROVISION FOR THERMAL SPRAYED COATINGS (METALLIZATION).
7. BASE ANGLE ASSEMBLY SHALL BE CONTINUOUS FOR THE LENGTH OF THE JOINT. AT CROWN BREAKS, THE ENDS OF THE BASE ANGLE ASSEMBLY SHALL BE CUT PARALLEL TO THE BRIDGE CENTERLINE FOR SKEWS LESS THAN 80° AND GREATER THAN 100°. FINISHED WELD SHALL BE GROUND SMOOTH AND COATED WITH A MINIMUM THICKNESS OF 4 DRY MILS OF ZINC-RICH PAINT IN ACCORDANCE WITH THE STANDARD SPECIFICATIONS.
8. FIELD SPLICES OF HOLD-DOWN PLATES SHALL BE KEPT TO A MINIMUM. CONTRACTOR SHALL FURNISH DETAILED PLANS SHOWING PROPOSED SPLICE LOCATIONS FOR APPROVAL. HOLD-DOWN PLATES SHALL NOT EXCEED 20' LENGTHS UNLESS APPROVED BY THE ENGINEER.
9. NO ALTERNATE JOINT DETAILS SHALL BE PERMITTED IN LIEU OF THOSE SHOWN ON THESE PLANS.
10. THE CONTRACTOR MAY, AT HIS OPTION, USE ADHESIVELY ANCHORED ANCHOR BOLTS IN PLACE OF CONCRETE INSERTS FOR COVER PLATES. THE YIELD LOAD OF THE ¾" Ø BOLT IS 10 KIPS. FIELD TESTING OF THE ADHESIVE BONDING SYSTEM IS NOT REQUIRED.

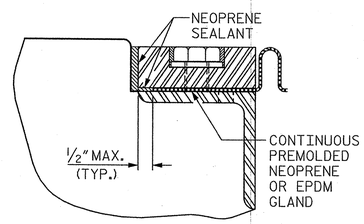

DETAIL "A"

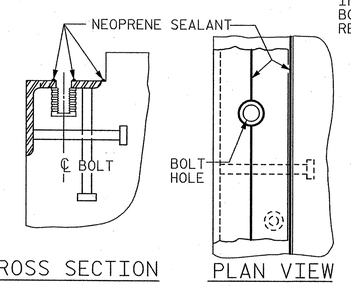

INSTALLATION SKETCH

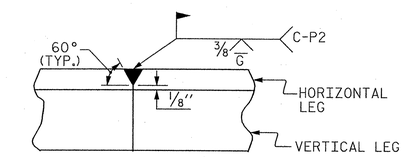

DETAIL- FIELD WELD SPLICE OF BASE ANGLE

MOVEMENT AND SETTING AT JOINT					
BENT NO.	SKEW ANGLE	TOTAL MOVEMENT (ALONG ℄ RDWY)	PERPENDICULAR JOINT OPENING AT 45° F	PERPENDICULAR JOINT OPENING AT 60° F	PERPENDICULAR JOINT OPENING AT 90° F
EB 1	55°-00'-00"	1⅝"	1⅞"	1¾"	1¼"
EB 2	55°-00'-00"	0"	1"	1"	1"

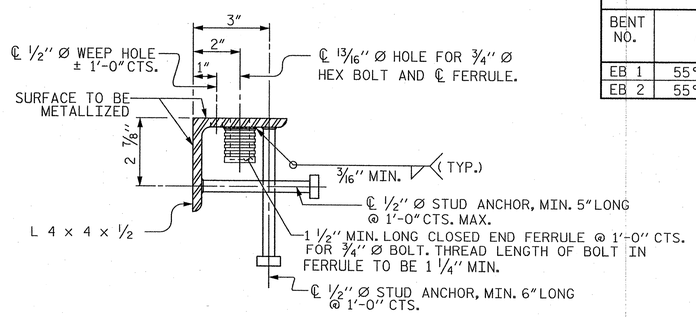

TYPICAL SECTION OF BASE ANGLE ASSEMBLY

PROJECT NO. R-2707B
CLEVELAND COUNTY
STATION: 252+73.29 -L-

NORTH CAROLINA PROFESSIONAL SEAL 12916 ENGINEER PAUL J. BARBER 8/16/12

STATE OF NORTH CAROLINA
DEPARTMENT OF TRANSPORTATION
RALEIGH

STANDARD
EXPANSION JOINT SEAL DETAILS

LEFT LANE

ASSEMBLED BY : J. BAYNE	DATE : 5/12
CHECKED BY : D. RAGAN	DATE : 5/12
DRAWN BY : REK 9/87	REV. 5/7/03R RWW/JTE
CHECKED BY : CRK 10/87	REV. 5/1/06R TLA/GM
	REV. 10/1/11 MAA/GM

HNTB
HNTB NORTH CAROLINA, P.C.
NC License No. C-1554
343 E. Six Forks Rd., Suite 200, Raleigh, N.C. 27609

DRAWN BY J. BAYNE DATE 5/12
CHECKED BY D. RAGAN DATE 5/12
DWG. NO. 17

REVISIONS						SHEET NO.
NO.	BY	DATE	NO.	BY	DATE	S-83
1			3			TOTAL SHEETS
2			4			266

STD. NO. EJS1

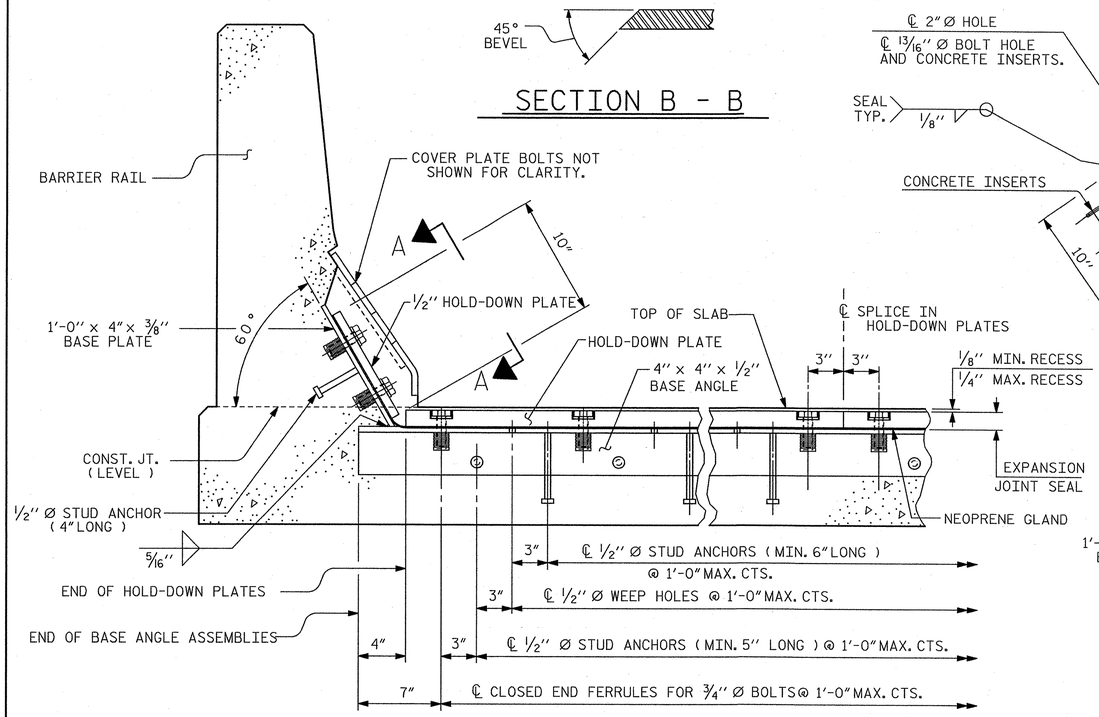

SECTION B - B

SECTION THRU RAIL NORMAL TO JOINT

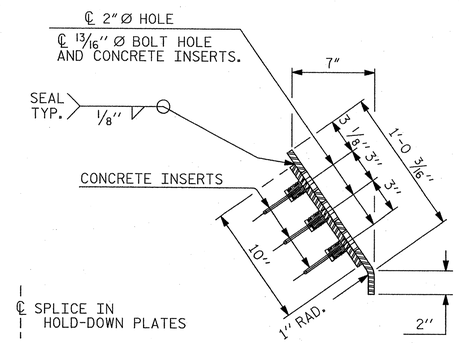

END VIEW

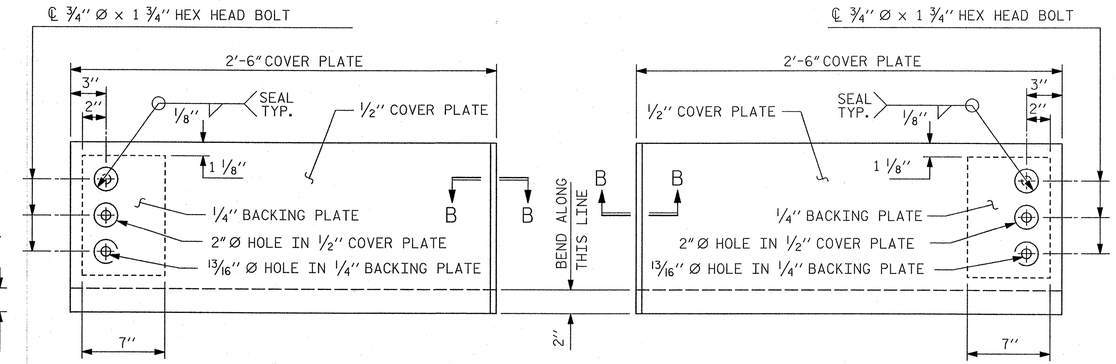

TYPE I - ELEVATION VIEW

(2 REQUIRED)

TYPE II - ELEVATION VIEW

(2 REQUIRED)

COVER PLATE DETAILS

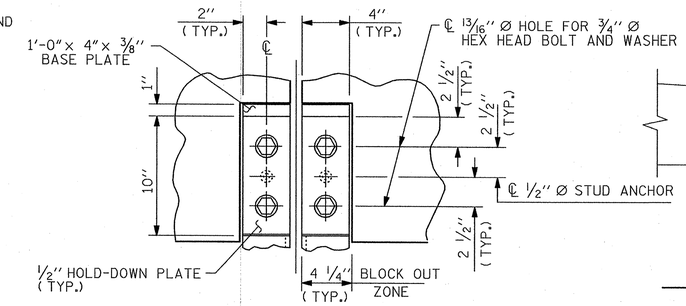

SECTION A - A

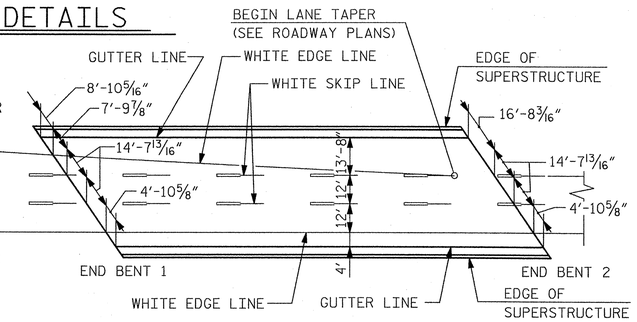

PAVEMENT MARKING ALIGNMENT

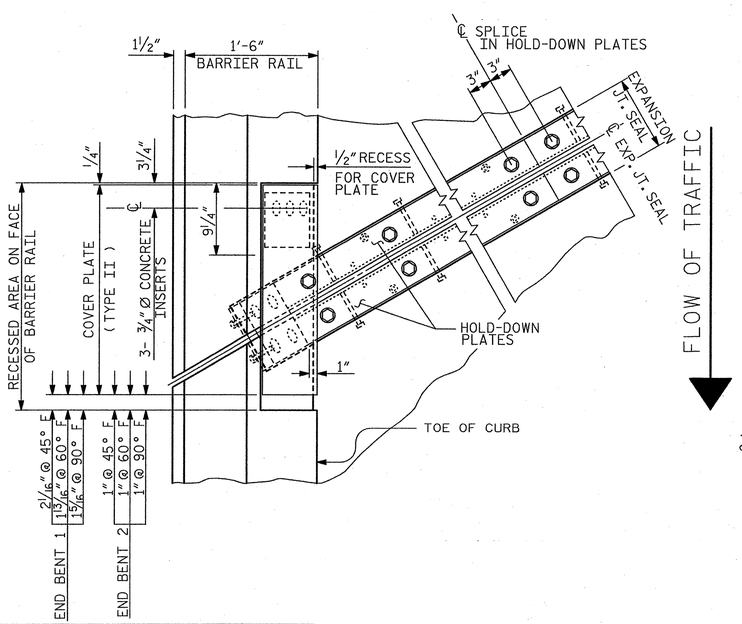

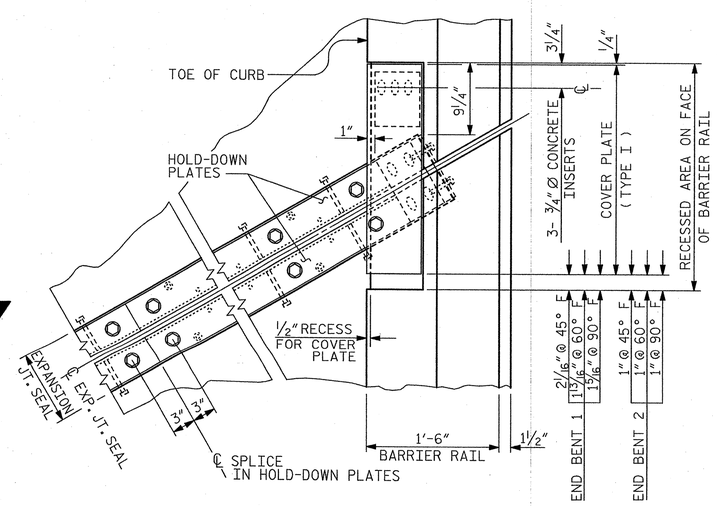

PLAN OF EXPANSION JOINT SEAL

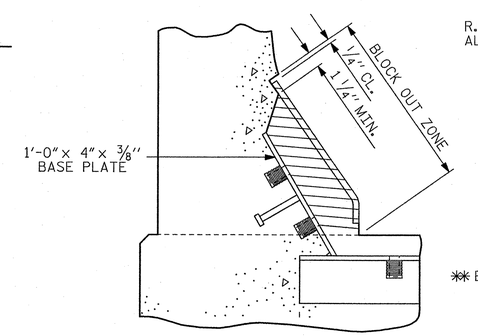

BLOCK OUT DETAIL

SEE " SECTION A - A " FOR OTHER DETAILS.

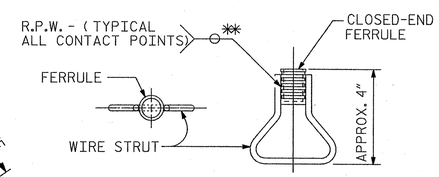

CONCRETE INSERT

** EACH WELDED ATTACHMENT OF WIRE TO FERRULE SHALL DEVELOP THE TENSILE STRENGTH OF THE WIRE.

PROJECT NO. R-2707B

CLEVELAND **COUNTY**

STATION: 252+73.29 -L-

NORTH CAROLINA PROFESSIONAL SEAL 12916 ENGINEER PAUL J. BARBER 05/22/12

STATE OF NORTH CAROLINA
DEPARTMENT OF TRANSPORTATION
RALEIGH

STANDARD

EXPANSION JOINT SEAL DETAILS FOR BARRIER RAIL

LEFT LANE

ASSEMBLED BY : J. BAYNE	DATE : 5/12		
CHECKED BY : D. RAGAN	DATE : 5/12		
DRAWN BY : REK 9/87	REV. 10/17/00	RWW/LES	
CHECKED BY : CRK 10/87	REV. 5/1/06	TLA/GM	
	REV. 10/1/11	MAA/GM	

HNTB HNTB NORTH CAROLINA, P.C.
NC License No. C-1554
343 E. Six Forks Rd., Suite 200, Raleigh, N.C. 27609

DRAWN BY J. BAYNE DATE 5/12
CHECKED BY D. RAGAN DATE 5/12
DWG. NO. 18

REVISIONS

NO.	BY	DATE	NO.	BY	DATE
1			3		
2			4		

SHEET NO. S-84
TOTAL SHEETS 266

STD. NO. EJS2

BILL OF MATERIAL

EPOXY COATED

BAR	NO.	SIZE	TYPE	LENGTH	WEIGHT
✻ A1	262	5	STR.	44'-7"	12,183
✻ A2	2	5	STR.	43'-11"	92
✻ A3	2	5	STR.	43'-3"	90
✻ A4	2	5	STR.	42'-6"	89
✻ A5	2	5	STR.	41'-9"	87
✻ A6	2	5	STR.	41'-1"	86
✻ A7	2	5	STR.	40'-4"	84
✻ A8	2	5	STR.	39'-8"	83
✻ A9	2	5	STR.	38'-11"	81
✻ A10	2	5	STR.	38'-3"	80
✻ A11	2	5	STR.	37'-6"	78
✻ A12	2	5	STR.	36'-10"	77
✻ A13	2	5	STR.	36'-1"	75
✻ A14	2	5	STR.	35'-4"	74
✻ A15	2	5	STR.	34'-8"	72
✻ A16	2	5	STR.	33'-11"	71
✻ A17	2	5	STR.	33'-3"	69
✻ A18	2	5	STR.	32'-6"	68
✻ A19	2	5	STR.	31'-10"	66
✻ A20	2	5	STR.	31'-1"	65
✻ A21	2	5	STR.	30'-4"	63
✻ A22	2	5	STR.	29'-8"	62
✻ A23	2	5	STR.	28'-11"	60
✻ A24	2	5	STR.	28'-3"	59
✻ A25	2	5	STR.	27'-6"	57
✻ A26	2	5	STR.	26'-10"	56
✻ A27	2	5	STR.	26'-1"	54
✻ A28	2	5	STR.	25'-5"	53
✻ A29	2	5	STR.	24'-8"	51
✻ A30	2	5	STR.	23'-11"	50
✻ A31	2	5	STR.	23'-3"	49
✻ A32	2	5	STR.	22'-6"	47
✻ A33	2	5	STR.	21'-10"	46
✻ A34	2	5	STR.	21'-1"	44
✻ A35	2	5	STR.	20'-5"	43
✻ A36	2	5	STR.	19'-8"	41
✻ A37	2	5	STR.	18'-11"	39
✻ A38	2	5	STR.	18'-3"	38
✻ A39	2	5	STR.	17'-6"	37
✻ A40	2	5	STR.	16'-10"	35
✻ A41	2	5	STR.	16'-1"	34
✻ A42	2	5	STR.	15'-5"	32
✻ A43	2	5	STR.	14'-8"	31
✻ A44	2	5	STR.	14'-0"	29

BILL OF MATERIAL

EPOXY COATED

BAR	NO.	SIZE	TYPE	LENGTH	WEIGHT
✻ A45	2	5	STR.	13'-3"	28
✻ A46	2	5	STR.	12'-6"	26
✻ A47	2	5	STR.	11'-10"	25
✻ A48	2	5	STR.	11'-1"	23
✻ A49	2	5	STR.	10'-5"	22
✻ A50	2	5	STR.	9'-8"	20
✻ A51	2	5	STR.	9'-0"	19
✻ A52	2	5	STR.	8'-3"	17
✻ A53	2	5	STR.	7'-6"	16
✻ A54	2	5	STR.	6'-10"	14
✻ A55	2	5	STR.	6'-1"	13
✻ A56	2	5	STR.	5'-5"	11
✻ A57	2	5	STR.	4'-8"	10
✻ A58	2	5	STR.	4'-0"	8
✻ A59	2	5	STR.	3'-3"	7
✻ A60	2	5	STR.	2'-6"	5
✻ A61	6	6	STR.	5'-9"	52
✻ B1	192	4	STR.	28'-8"	3,677
✻ G1	2	5	STR.	54'-4"	113
✻ J1	102	4	4	1'-5"	97
✻ K1	16	5	1	11'-8"	195
✻ K2	24	5	2	15'-6"	388
✻ S1	64	4	3	4'-11"	210
				TOTAL	19,776

✻ DENOTES EPOXY COATED REINFORCING STEEL

BILL OF MATERIAL

UNCOATED

BAR	NO.	SIZE	TYPE	LENGTH	WEIGHT
A101	262	5	STR.	44'-7"	12,183
A102	2	5	STR.	43'-11"	92
A103	2	5	STR.	43'-3"	90
A104	2	5	STR.	42'-6"	89
A105	2	5	STR.	41'-9"	87
A106	2	5	STR.	41'-1"	86
A107	2	5	STR.	40'-4"	84
A108	2	5	STR.	39'-8"	83
A109	2	5	STR.	38'-11"	81
A110	2	5	STR.	38'-3"	80
A111	2	5	STR.	37'-6"	78
A112	2	5	STR.	36'-10"	77
A113	2	5	STR.	36'-1"	75
A114	2	5	STR.	35'-4"	74
A115	2	5	STR.	34'-8"	72
A116	2	5	STR.	33'-11"	71
A117	2	5	STR.	33'-3"	69
A118	2	5	STR.	32'-6"	68
A119	2	5	STR.	31'-10"	66
A120	2	5	STR.	31'-1"	65
A121	2	5	STR.	30'-4"	63
A122	2	5	STR.	29'-8"	62
A123	2	5	STR.	28'-11"	60
A124	2	5	STR.	28'-3"	59
A125	2	5	STR.	27'-6"	57
A126	2	5	STR.	26'-10"	56
A127	2	5	STR.	26'-1"	54
A128	2	5	STR.	25'-5"	53
A129	2	5	STR.	24'-8"	51
A130	2	5	STR.	23'-11"	50
A131	2	5	STR.	23'-3"	49
A132	2	5	STR.	22'-6"	47
A133	2	5	STR.	21'-10"	46
A134	2	5	STR.	21'-1"	44
A135	2	5	STR.	20'-5"	43
A136	2	5	STR.	19'-8"	41
A137	2	5	STR.	18'-11"	39
A138	2	5	STR.	18'-3"	38
A139	2	5	STR.	17'-6"	37
A140	2	5	STR.	16'-10"	35
A141	2	5	STR.	16'-1"	34
A142	2	5	STR.	15'-5"	32
A143	2	5	STR.	14'-8"	31
A144	2	5	STR.	14'-0"	29

BILL OF MATERIAL

UNCOATED

BAR	NO.	SIZE	TYPE	LENGTH	WEIGHT
A145	2	5	STR.	13'-3"	28
A146	2	5	STR.	12'-6"	26
A147	2	5	STR.	11'-10"	25
A148	2	5	STR.	11'-1"	23
A149	2	5	STR.	10'-5"	22
A150	2	5	STR.	9'-8"	20
A151	2	5	STR.	9'-0"	19
A152	2	5	STR.	8'-3"	17
A153	2	5	STR.	7'-6"	16
A154	2	5	STR.	6'-10"	14
A155	2	5	STR.	6'-1"	13
A156	2	5	STR.	5'-5"	11
A157	2	5	STR.	4'-8"	10
A158	2	5	STR.	4'-0"	8
A159	2	5	STR.	3'-3"	7
A160	2	5	STR.	2'-6"	5
B101	156	5	STR.	55'-5"	9,017
				TOTAL	24,061

BAR TYPES

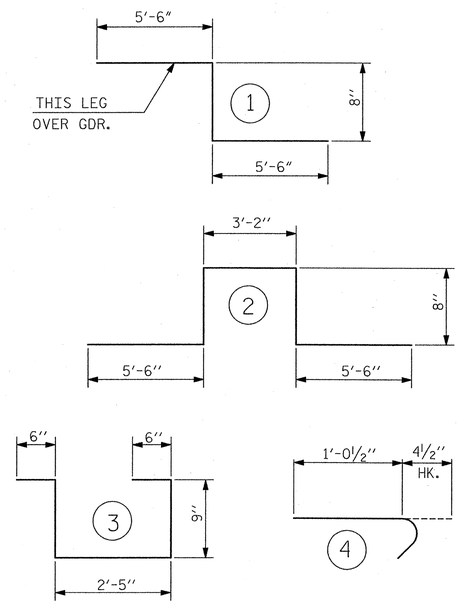

ALL BAR DIMENSIONS ARE OUT TO OUT

SUPERSTRUCTURE BILL OF MATERIAL

	CLASS AA CONCRETE	REINFORCING STEEL	EPOXY COATED REINFORCING STEEL
	(CU.YDS.)	(LBS.)	(LBS.)
SPAN "A"	230.9	24,061	19,776
TOTALS ✻✻	230.9	24,061	19,776

✻✻ QUANTITIES FOR BARRIER RAIL ARE NOT INCLUDED

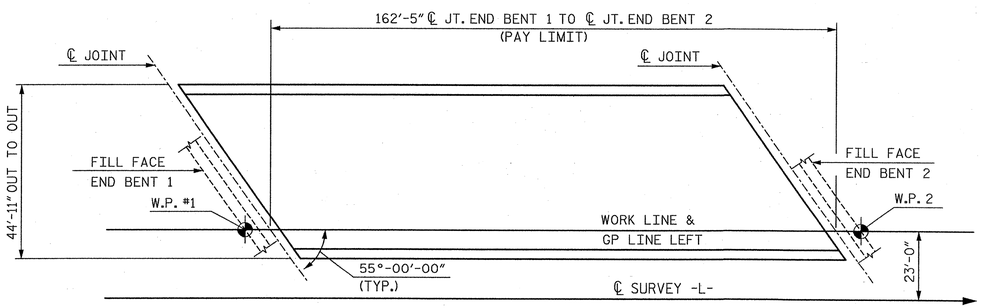

LAYOUT FOR COMPUTING AREA REINFORCED CONCRETE DECK SLAB

(SQ. FT. = 7,295.2)

SUPERSTRUCTURE REINFORCING STEEL LENGTHS ARE BASED ON THE FOLLOWING MINIMUM SPLICE LENGTHS

BAR SIZE	SUPERSTRUCTURE EXCEPT APPROACH SLABS, PARAPET, AND BARRIER RAIL		APPROACH SLABS		PARAPET AND BARRIER RAIL
	EPOXY COATED	UNCOATED	EPOXY COATED	UNCOATED	
#4	2'-0"	1'-9"	2'-0"	1'-9"	2'-9"
#5	2'-6"	2'-2"	2'-6"	2'-2"	3'-5"
#6	3'-0"	2'-7"	3'-10"	2'-7"	4'-4"
#7	5'-3"	3'-6"			
#8	6'-10"	4'-7"			

GROOVING BRIDGE FLOORS

APPROACH SLABS	1,837.0	SQ.FT.
BRIDGE DECK	6,230.9	SQ.FT.
TOTAL	8,067.9	SQ.FT.

PROJECT NO. R-2707B

CLEVELAND COUNTY

STATION: 252+73.29 -L-

NORTH CAROLINA PROFESSIONAL SEAL 12916 ENGINEER PAUL J. BARBER 03/28/12

STATE OF NORTH CAROLINA
DEPARTMENT OF TRANSPORTATION
RALEIGH

STANDARD
SUPERSTRUCTURE BILL OF MATERIAL
LEFT LANE

ASSEMBLED BY : J. BAYNE	DATE : 4/12
CHECKED BY : P. BARBER	DATE : 5/12

DRAWN BY : JMB 5/87	REV. 8/16/99	RWW/LES
CHECKED BY : SJD 9/87	REV. 5/1/06	TLA/GM
	REV. 10/1/11	MAA/GM

HNTB NORTH CAROLINA, P.C.
NC License No. C-1554
343 E. Six Forks Rd., Suite 200, Raleigh, N.C. 27609

DRAWN BY J. BAYNE DATE 5/12
CHECKED BY P. BARBER DATE 5/12
DWG. NO. 19

REVISIONS						SHEET NO.
NO.	BY	DATE	NO.	BY	DATE	S-25
1			3			TOTAL SHEETS
2			4			266

STD. NO. BOM1

NOTES:

FOR NOTES, SEE SHEET 3 OF 3.

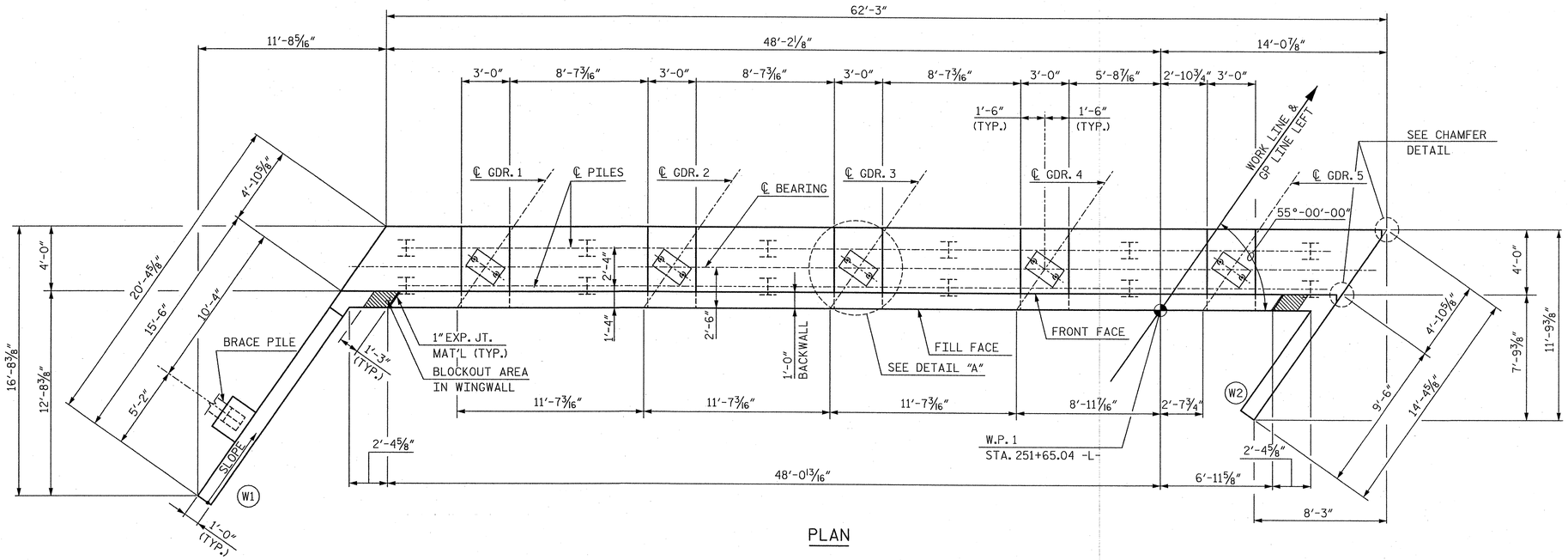

PLAN

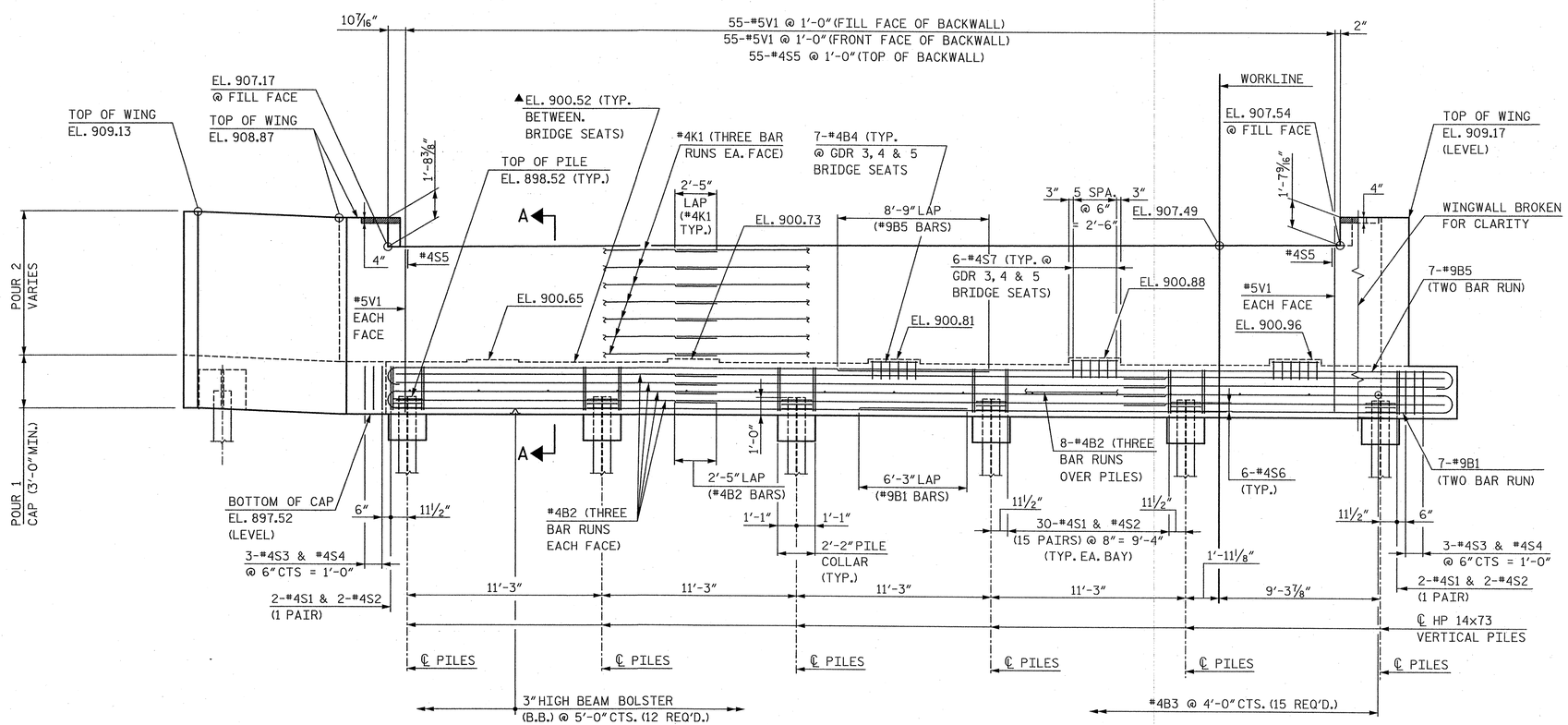

ELEVATION

▲FOR LOCATION OF ELEVATIONS BETWEEN BRIDGE SEATS, SEE SECTION A-A, SHEET 3 OF 3.

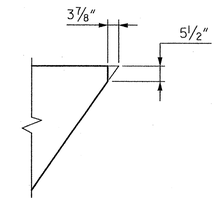

CHAMFER DETAIL

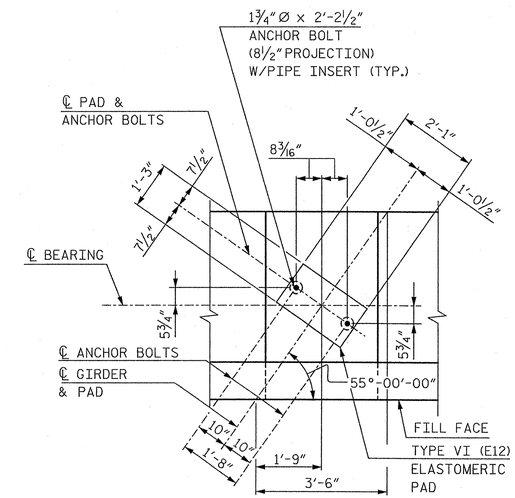

DETAIL A

NOTE: FOR PIPE INSERT DETAILS, SEE BEARING SHEET.

NORTH CAROLINA PROFESSIONAL SEAL 12916 ENGINEER PAUL J. BARBER 6/26/12

PROJECT NO. R-2707B

CLEVELAND COUNTY

STATION: 252+73.29 -L-

SHEET 1 OF 3

STATE OF NORTH CAROLINA
DEPARTMENT OF TRANSPORTATION
RALEIGH

SUBSTRUCTURE

END BENT 1

LEFT LANE

HNTB NORTH CAROLINA, P.C.
NC License No. C-1554
343 E. Six Forks Rd., Suite 200, Raleigh, N.C. 27609

DRAWN BY J. BAYNE DATE 6/12
CHECKED BY P. BARBER DATE 6/12

DWG. NO. 20

REVISIONS						SHEET NO.
NO.	BY	DATE	NO.	BY	DATE	S-86
1			3			TOTAL SHEETS
2			4			266

NOTES:

FOR NOTES, SEE SHEET 3 OF 3.

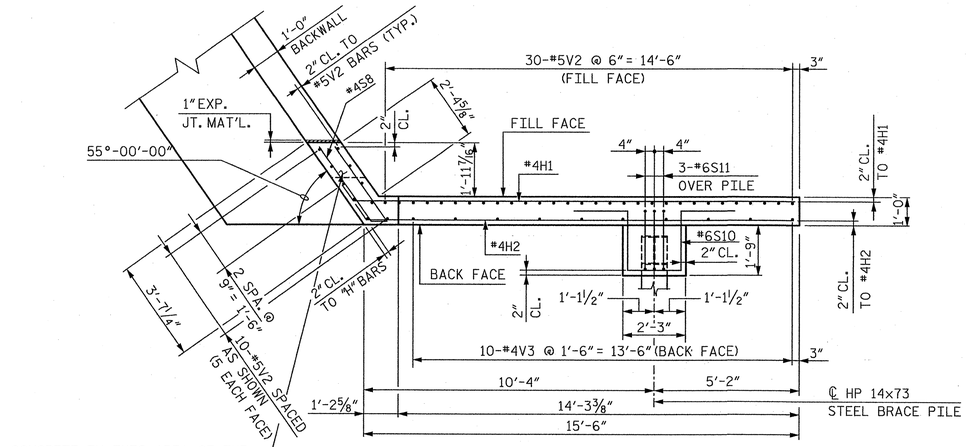

PLAN OF WING (W1)

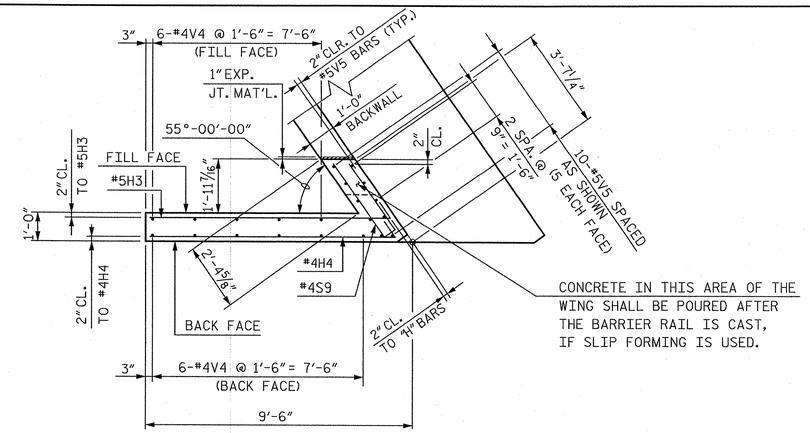

PLAN OF WING (W2)

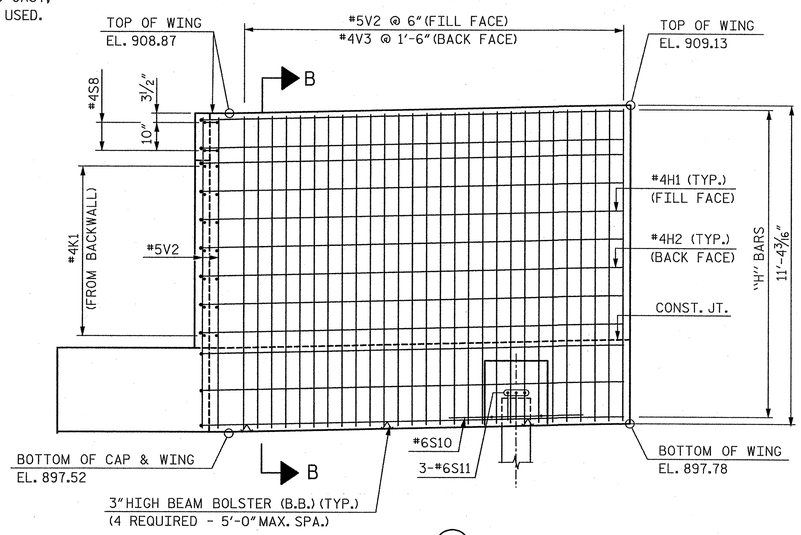

ELEVATION OF WING (W1)

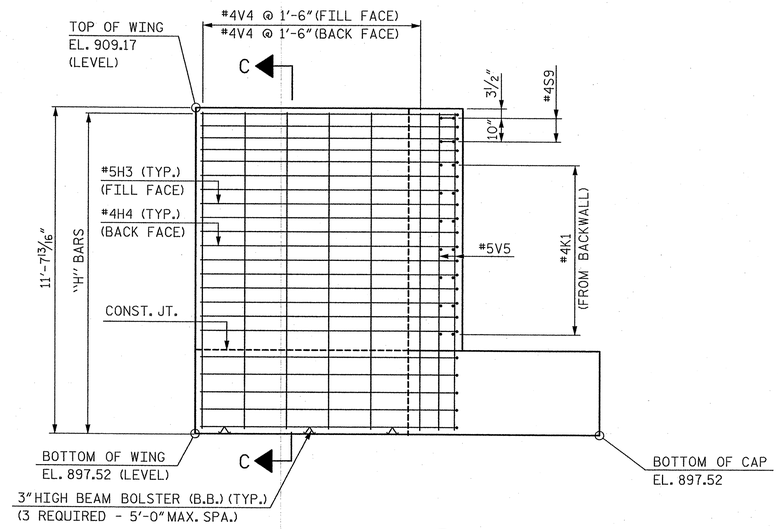

ELEVATION OF WING (W2)

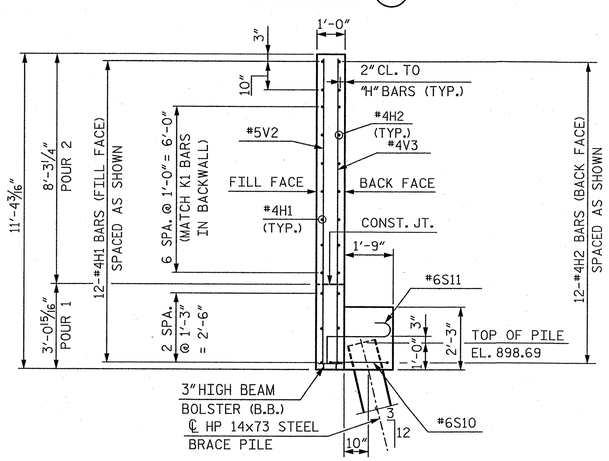

SECTION B-B

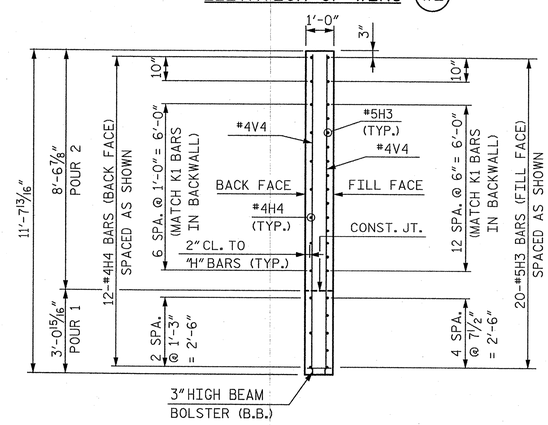

SECTION C-C

PROJECT NO. R-2707B

CLEVELAND COUNTY

STATION: 252+73.29 -L-

SHEET 2 OF 3

STATE OF NORTH CAROLINA
DEPARTMENT OF TRANSPORTATION
RALEIGH

SUBSTRUCTURE

END BENT 1

LEFT LANE

HNTB NORTH CAROLINA, P.C.
NC License No. C-0554
343 E. Six Forks Rd., Suite 200, Raleigh, N.C. 27609

DRAWN BY J. BAYNE DATE 6/12
CHECKED BY P. BARBER DATE 6/12

DWG. NO. 21

REVISIONS						SHEET NO.
NO.	BY	DATE	NO.	BY	DATE	S-87
1			3			TOTAL SHEETS
2			4			266

NORTH CAROLINA PROFESSIONAL SEAL 12916 ENGINEER PAUL J. BARBER 8/26/12

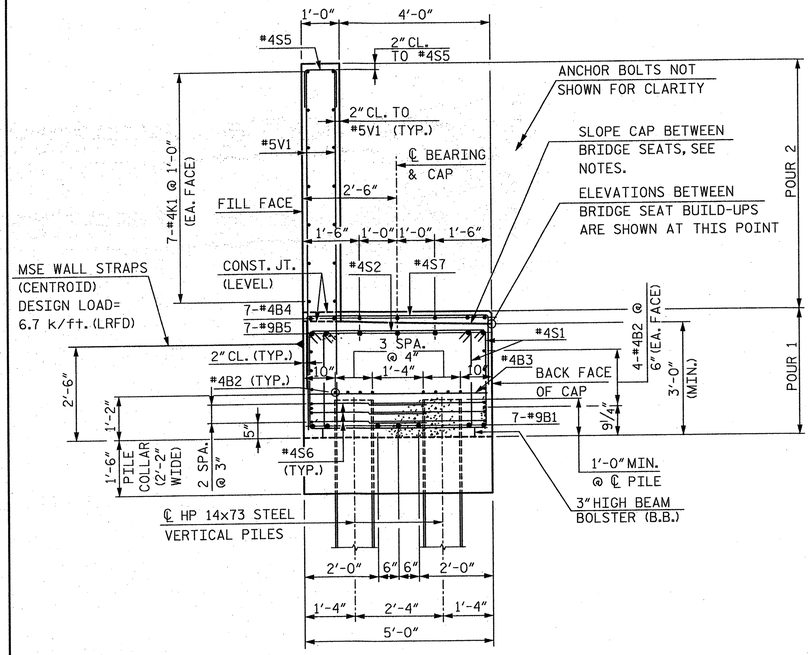

SECTION A-A

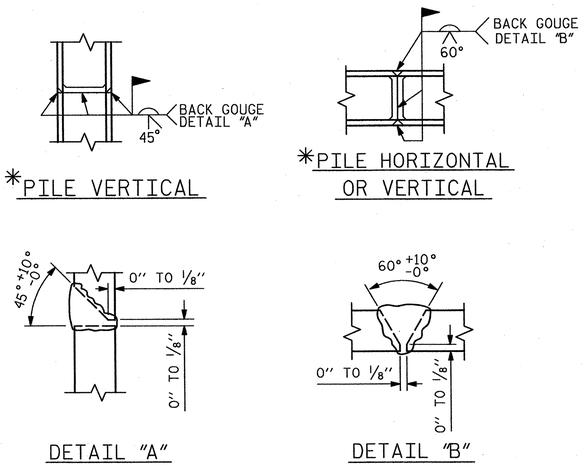

* POSITION OF PILE DURING WELDING.

PILE SPLICE DETAILS

BAR TYPES

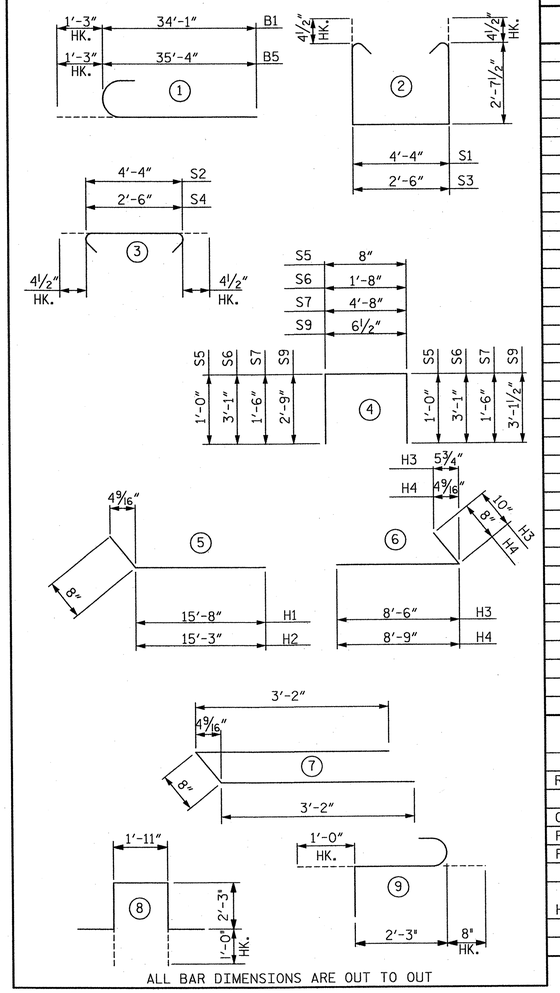

ALL BAR DIMENSIONS ARE OUT TO OUT

BILL OF REINFORCING

END BENT 1

BAR	NO.	SIZE	TYPE	LENGTH	WEIGHT
B1	14	9	1	35'-4"	1,682
B2	48	4	STR.	22'-3"	713
B3	15	4	STR.	4'-8"	47
B4	21	4	STR.	2'-8"	37
B5	14	9	1	36'-7"	1,741
H1	12	4	5	16'-4"	131
H2	12	4	5	15'-11"	128
H3	20	5	6	9'-4"	195
H4	12	4	6	9'-5"	75
K1	42	4	STR.	22'-3"	624
S1	154	4	2	10'-4"	1,063
S2	154	4	3	5'-1"	523
S3	6	4	2	8'-6"	34
S4	6	4	3	3'-3"	13
S5	55	4	4	2'-8"	98
S6	36	4	4	7'-10"	188
S7	18	4	4	7'-8"	92
S8	2	4	7	7'-0"	9
S9	2	4	4	6'-5"	9
S10	1	6	8	8'-5"	13
S11	3	6	9	3'-11"	18
V1	110	5	STR.	9'-2"	1,052
V2	40	5	STR.	10'-11"	455
V3	10	4	STR.	10'-11"	73
V4	12	4	STR.	11'-2"	90
V5	10	5	STR.	11'-2"	116

QUANTITIES

REINFORCING STEEL	LBS.	9,219
CLASS "A" CONCRETE BREAKDOWN		
POUR 1 - CAP & BOTT. OF WINGS	CU. YDS.	38.6
POUR 2 - TOP OF WINGS & BACKWALL	CU. YDS.	23.0
TOTAL	CU. YDS.	61.6
HP 14x73 STEEL PILES	NO.	13
	FEET	850

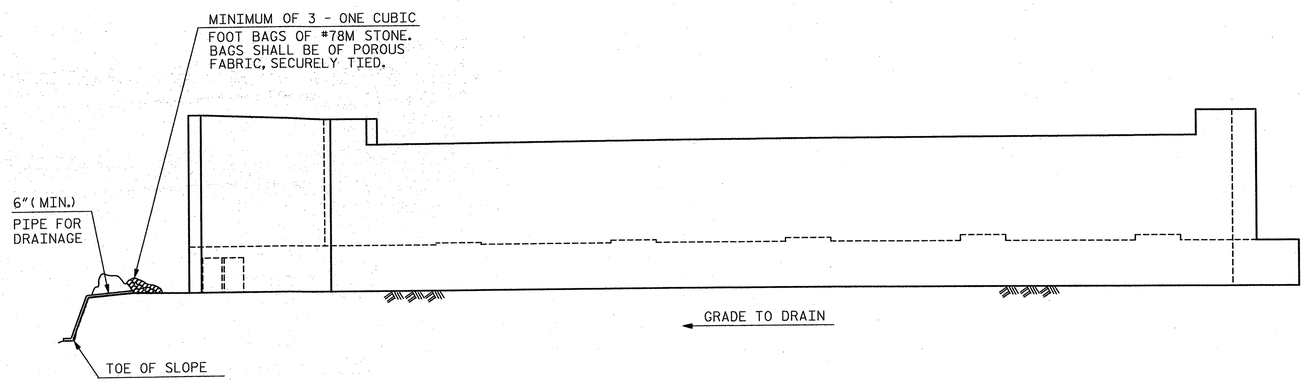

BAGGED STONE AND PIPE SHALL BE PLACED IMMEDIATELY AFTER COMPLETION OF END BENT EXCAVATION. PIPE MAY BE EITHER CONCRETE, CORRUGATED STEEL, CORRUGATED ALUMINUM ALLOY OR CORRUGATED PLASTIC. PERFORATED PIPE WILL NOT BE ALLOWED.

BAGGED STONE SHALL REMAIN IN PLACE UNTIL THE ENGINEER DIRECTS THAT IT BE REMOVED. THE CONTRACTOR SHALL REMOVE AND DISPOSE OF SILT ACCUMULATIONS AT BAGGED STONE WHEN SO DIRECTED BY THE ENGINEER. BAGS SHALL BE REMOVED AND REPLACED WHENEVER THE ENGINEER DETERMINES THAT THEY HAVE DETERIORATED AND LOST THEIR EFFECTIVENESS.

NO SEPARATE PAYMENT WILL BE MADE FOR THIS WORK AND THE ENTIRE COST OF THIS WORK SHALL BE INCLUDED IN THE UNIT CONTRACT PRICE FOR THE SEVERAL PAY ITEMS.

TEMPORARY DRAINAGE AT END BENT 1

NOTES:

STIRRUPS IN CAP MAY BE SHIFTED AS NECESSARY TO CLEAR ANCHOR BOLTS.

BACKWALL SHALL BE PLACED BEFORE APPLYING THE EPOXY PROTECTIVE COATING. THE TOP SURFACE AREAS OF THE END BENT CAP SHALL BE CURED IN ACCORDANCE WITH THE STANDARD SPECIFICATIONS, EXCEPT THAT THE MEMBRANE CURING COMPOUND METHOD SHALL NOT BE USED.

THE TOP SURFACE OF THE END BENT CAP EXCEPT THE BRIDGE SEAT BUILDUPS SHALL BE SLOPED TRANSVERSELY FROM THE FILL FACE TO THE BACK FACE AT THE RATE OF 2%.

EPOXY COAT THE END BENT CAP AFTER ADJUSTMENTS ARE MADE TO BEARINGS AND ANCHOR BOLTS ARE GROUTED.

PROJECT NO. R-2707B

CLEVELAND COUNTY

STATION: 252+73.29 -L-

SHEET 3 OF 3

NORTH CAROLINA PROFESSIONAL SEAL 12916 ENGINEER PAUL J. BARBER 3/18/14

STATE OF NORTH CAROLINA
DEPARTMENT OF TRANSPORTATION
RALEIGH

SUBSTRUCTURE

END BENT 1

LEFT LANE

HNTB NORTH CAROLINA, P.C.
NC License No. C-1554
343 E. Six Forks Rd., Suite 200, Raleigh, N.C. 27609

DRAWN BY J. BAYNE DATE 3/14
CHECKED BY P. BARBER DATE 3/14

DWG. NO. 22

REVISIONS						
NO.	BY	DATE	NO.	BY	DATE	
1			3			
2			4			

SHEET NO. S-88

TOTAL SHEETS 266

NOTES:

FOR NOTES, SEE SHEET 3 OF 3.

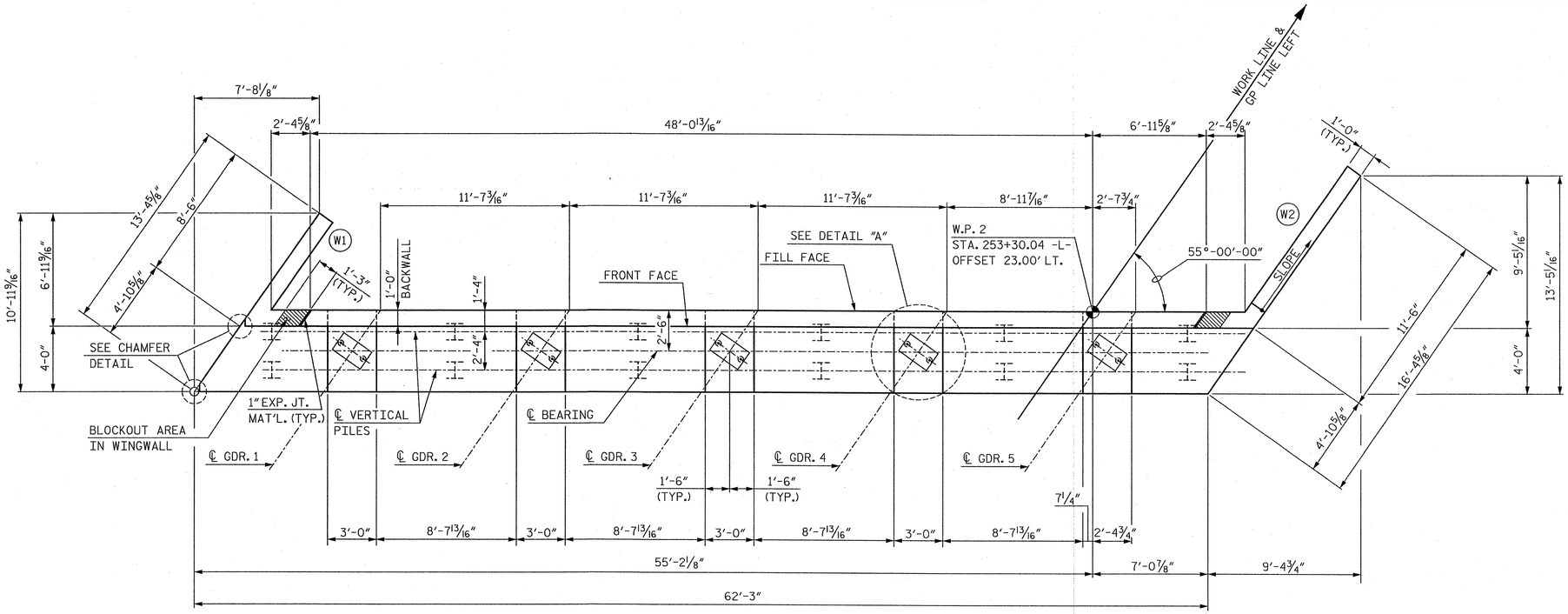

PLAN

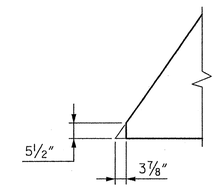

CHAMFER DETAIL

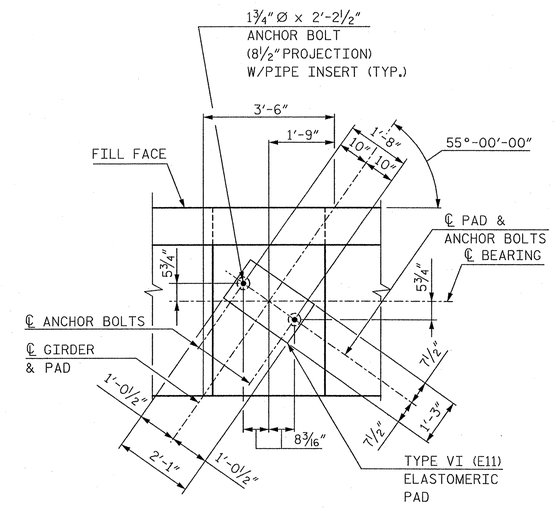

DETAIL A

NOTE: FOR PIPE INSERT DETAILS, SEE BEARING SHEET.

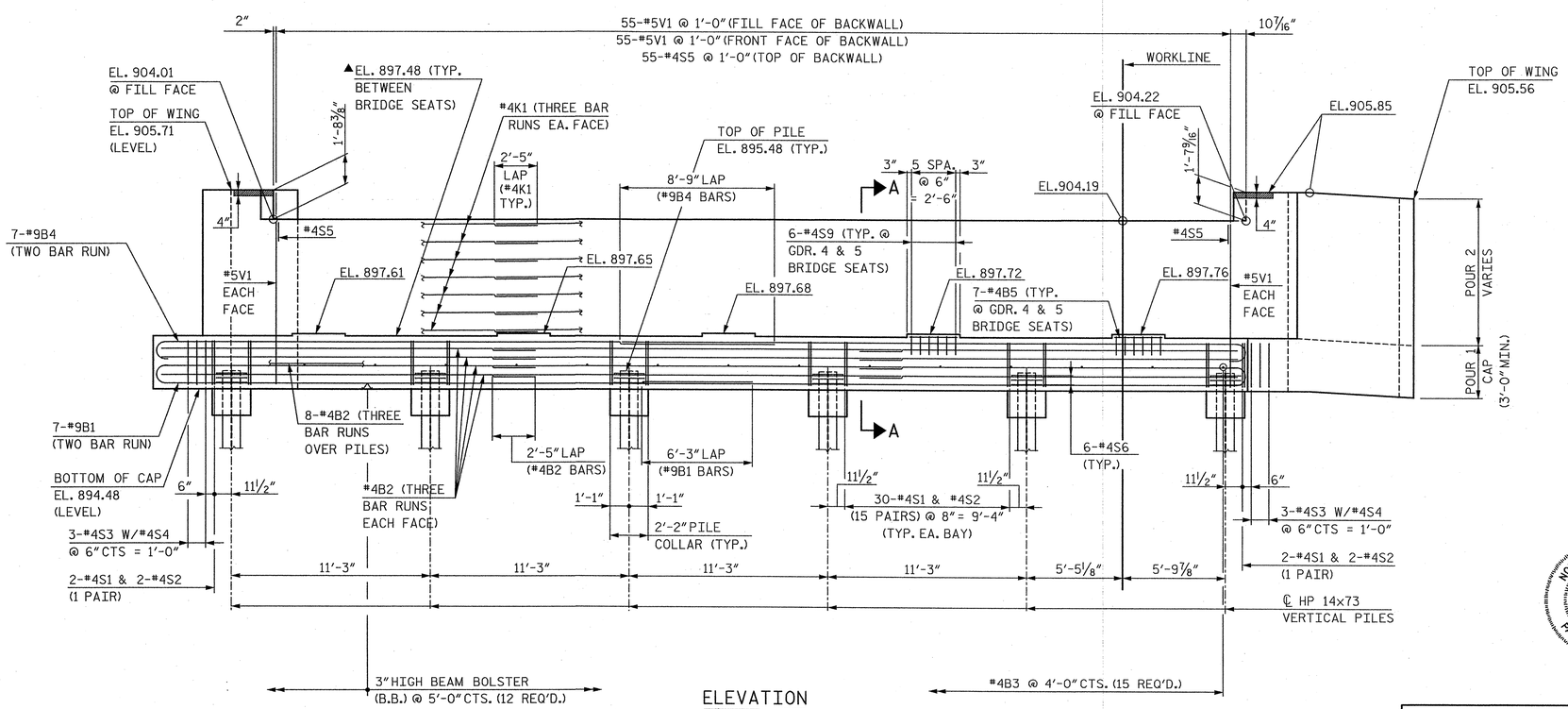

ELEVATION

▲FOR LOCATION OF ELEVATIONS BETWEEN BRIDGE SEATS, SEE SECTION A-A, SHEET 3 OF 3.

PROJECT NO. R-2707B

CLEVELAND COUNTY

STATION: 252+73.29 -L-

SHEET 1 OF 3

STATE OF NORTH CAROLINA
DEPARTMENT OF TRANSPORTATION
RALEIGH

SUBSTRUCTURE

END BENT 2

LEFT LANE

HNTB NORTH CAROLINA, P.C.
NC License No. C-1554
343 E. Six Forks Rd., Suite 200, Raleigh, N.C. 27609

DRAWN BY J. BAYNE DATE 6/12
CHECKED BY D. HAWKINS DATE 6/12

DWG. NO. 23

REVISIONS						SHEET NO.
NO.	BY	DATE	NO.	BY	DATE	S-89
1			3			TOTAL SHEETS
2			4			266

NORTH CAROLINA PROFESSIONAL SEAL 12916 ENGINEER PAUL J. BARBER 8/28/12

NOTES:

FOR NOTES, SEE SHEET 3 OF 3.

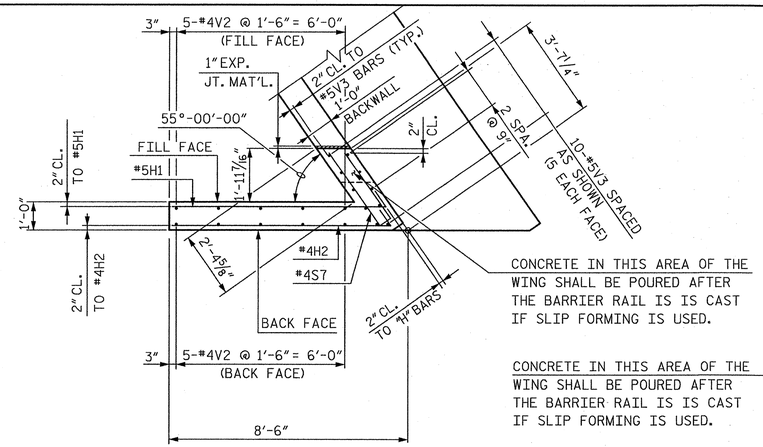

PLAN OF WING (W1)

CONCRETE IN THIS AREA OF THE WING SHALL BE POURED AFTER THE BARRIER RAIL IS IS CAST IF SLIP FORMING IS USED.

CONCRETE IN THIS AREA OF THE WING SHALL BE POURED AFTER THE BARRIER RAIL IS IS CAST IF SLIP FORMING IS USED.

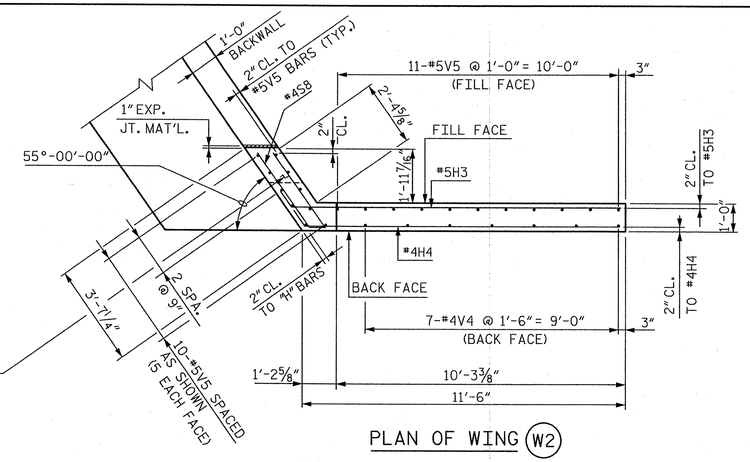

PLAN OF WING (W2)

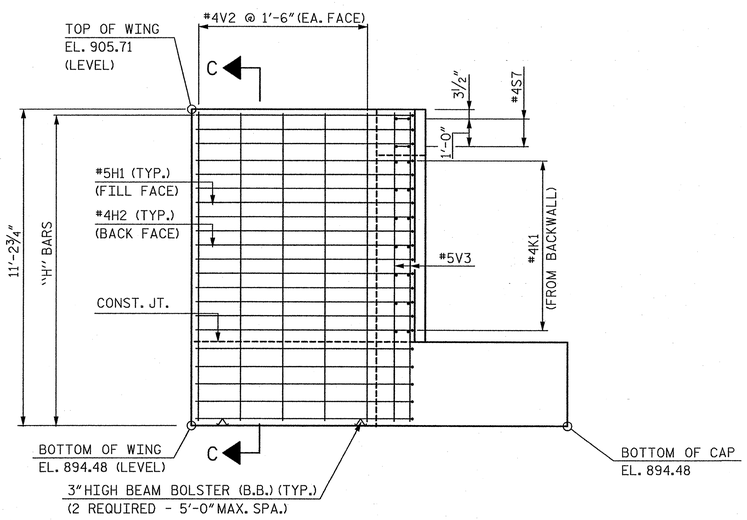

ELEVATION OF WING (W1)

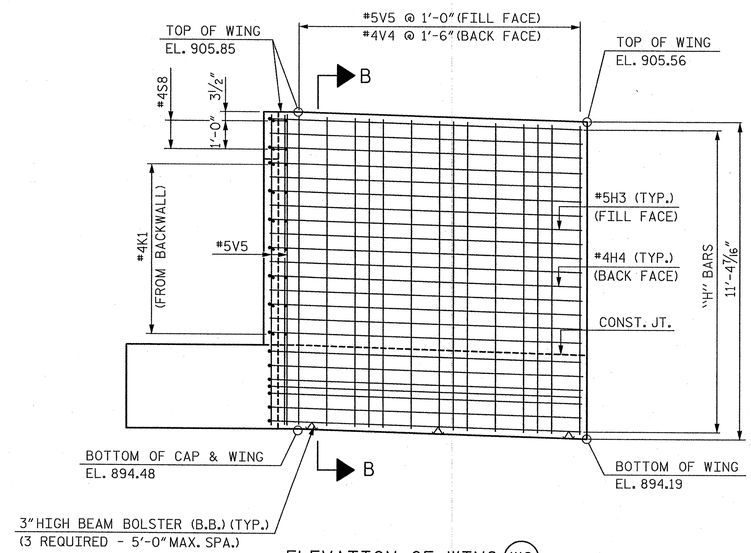

ELEVATION OF WING (W2)

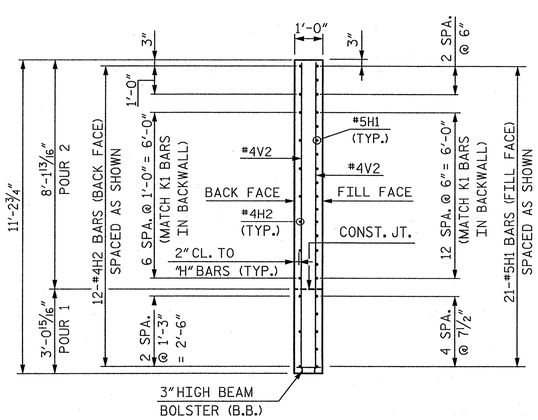

SECTION C-C

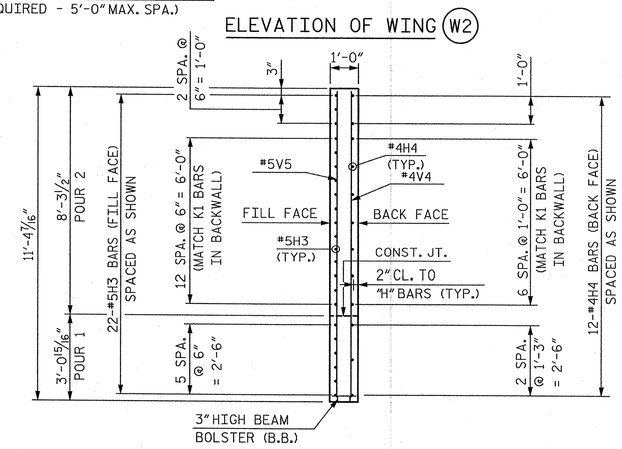

SECTION B-B

PROJECT NO. R-2707B

CLEVELAND COUNTY

STATION: 252+73.29 -L-

SHEET 2 OF 3

STATE OF NORTH CAROLINA
DEPARTMENT OF TRANSPORTATION
RALEIGH

SUBSTRUCTURE

END BENT 2

LEFT LANE

NORTH CAROLINA PROFESSIONAL ENGINEER SEAL 12916 PAUL J. BARBER 8/28/12

HNTB NORTH CAROLINA, P.C.
NC License No. C-1554
343 E. Six Forks Rd., Suite 200, Raleigh, N.C. 27609

DRAWN BY J. BAYNE DATE 6/12
CHECKED BY D. HAWKINS DATE 6/12

DWG. NO. 24

REVISIONS						SHEET NO.
NO.	BY	DATE	NO.	BY	DATE	S-90
1			3			TOTAL SHEETS
2			4			266

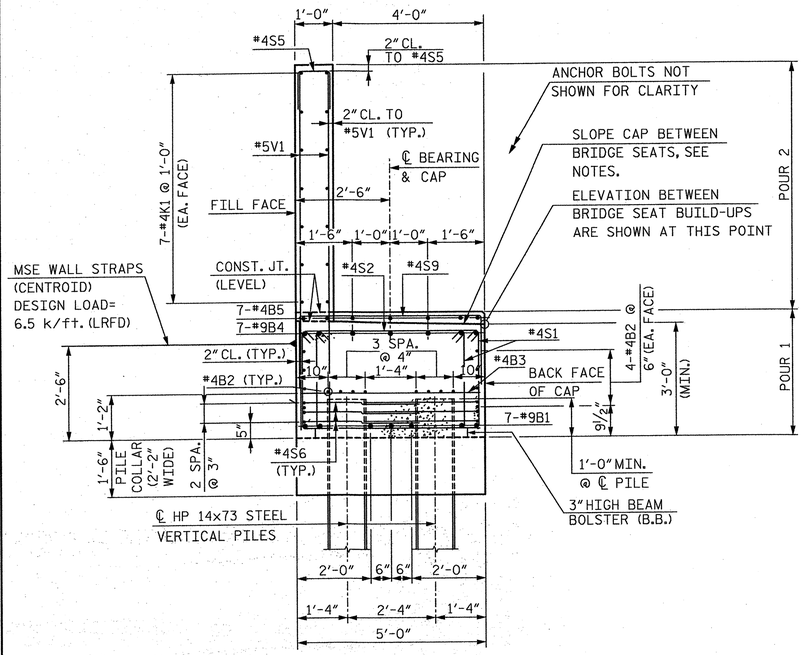

SECTION A-A

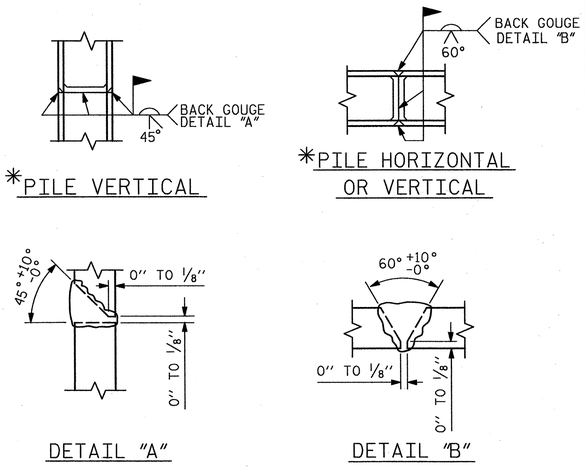

* POSITION OF PILE DURING WELDING.

PILE SPLICE DETAILS

BAR TYPES

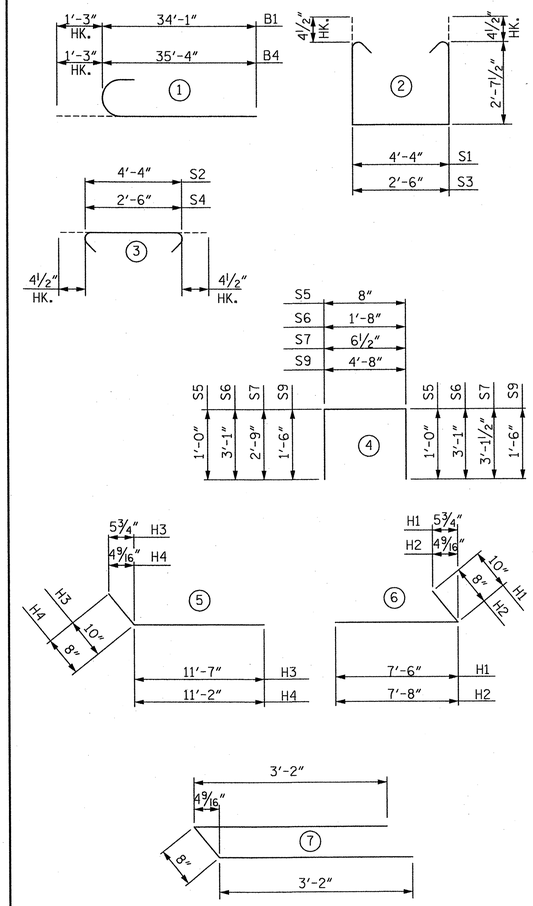

ALL BAR DIMENSIONS ARE OUT TO OUT

BILL OF REINFORCING

END BENT 2

BAR	NO.	SIZE	TYPE	LENGTH	WEIGHT
B1	14	9	1	35'-4"	1,682
B2	48	4	STR	22'-3"	713
B3	15	4	STR.	4'-8"	47
B4	14	9	1	36'-7"	1,741
B5	14	4	STR.	2'-8"	25
H1	21	5	6	8'-4"	183
H2	12	4	6	8'-4"	67
H3	22	5	5	12'-5"	285
H4	12	4	5	11'-10"	95
K1	42	4	STR,	22'-3"	624
S1	154	4	2	10'-4"	1,063
S2	154	4	3	5'-1"	523
S3	6	4	2	8'-6"	34
S4	6	4	3	3'-3"	13
S5	55	4	4	2'-8"	98
S6	36	4	4	7'-10"	188
S7	2	4	4	6'-5"	9
S8	2	4	7	7'-0"	9
S9	12	4	4	7'-8"	61
V1	110	5	STR.	9'-1"	1,042
V2	10	4	STR.	10'-9"	72
V3	10	5	STR.	10'-9"	112
V4	7	4	STR.	10'-11"	51
V5	21	5	STR.	10'-11"	239

QUANTITIES

REINFORCING STEEL	LBS.	8,976
CLASS "A" CONCRETE BREAKDOWN		
POUR 1 - CAP & BOTT. OF WINGS	CU. YDS.	37.5
POUR 2 - TOP OF WINGS & BACKWALL	CU. YDS.	20.8
TOTAL	CU. YDS.	58.3
HP 14x73 STEEL PILES	NO.	12
	FEET	840

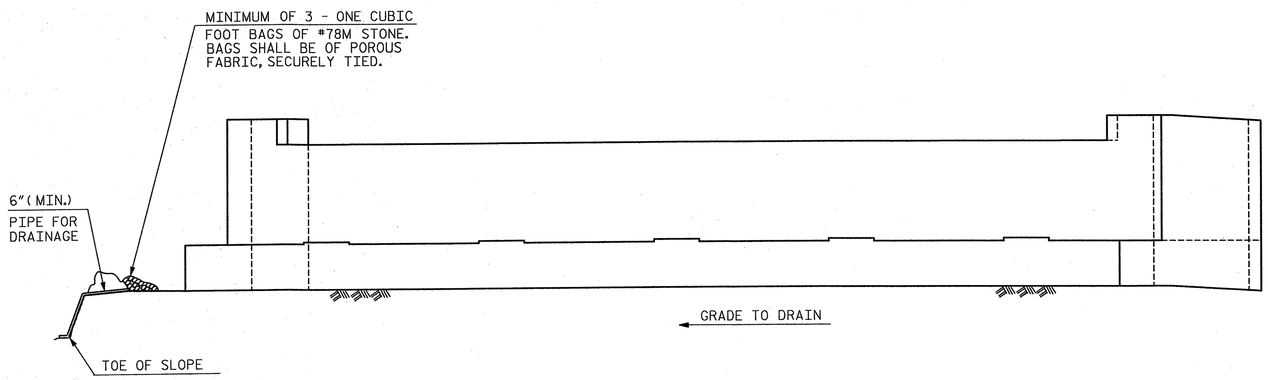

BAGGED STONE AND PIPE SHALL BE PLACED IMMEDIATELY AFTER COMPLETION OF END BENT EXCAVATION. PIPE MAY BE EITHER CONCRETE, CORRUGATED STEEL, CORRUGATED ALUMINUM ALLOY OR CORRUGATED PLASTIC. PERFORATED PIPE WILL NOT BE ALLOWED.

BAGGED STONE SHALL REMAIN IN PLACE UNTIL THE ENGINEER DIRECTS THAT IT BE REMOVED. THE CONTRACTOR SHALL REMOVE AND DISPOSE OF SILT ACCUMULATIONS AT BAGGED STONE WHEN SO DIRECTED BY THE ENGINEER. BAGS SHALL BE REMOVED AND REPLACED WHENEVER THE ENGINEER DETERMINES THAT THEY HAVE DETERIORATED AND LOST THEIR EFFECTIVENESS.

NO SEPARATE PAYMENT WILL BE MADE FOR THIS WORK AND THE ENTIRE COST OF THIS WORK SHALL BE INCLUDED IN THE UNIT CONTRACT PRICE FOR THE SEVERAL PAY ITEMS.

TEMPORARY DRAINAGE AT END BENT 2

NOTES:

STIRRUPS IN CAP MAY BE SHIFTED AS NECESSARY TO CLEAR ANCHOR BOLTS.

BACKWALL SHALL BE PLACED BEFORE APPLYING THE EPOXY PROTECTIVE COATING.

THE TOP SURFACE AREAS OF THE END BENT CAP SHALL BE CURED IN ACCORDANCE WITH THE STANDARD SPECIFICATIONS EXCEPT THAT THE MEMBRANE CURING COMPOUND METHOD SHALL NOT BE USED.

THE TOP SURFACE OF THE END BENT CAP EXCEPT THE BRIDGE SEAT BUILDUPS SHALL BE SLOPED TRANSVERSELY FROM THE FILL FACE TO THE BACK FACE AT THE RATE OF 2%.

PROJECT NO. R-2707B
CLEVELAND COUNTY
STATION: 252+73.29 -L-

SHEET 3 OF 3

NORTH CAROLINA PROFESSIONAL SEAL 12916 ENGINEER PAUL J. BARBER 3/28/14

STATE OF NORTH CAROLINA
DEPARTMENT OF TRANSPORTATION
RALEIGH

SUBSTRUCTURE

END BENT 2

LEFT LANE

HNTB NORTH CAROLINA, P.C.
NC License No. C-1554
343 E. Six Forks Rd., Suite 200, Raleigh, N.C. 27609

DRAWN BY J. BAYNE DATE 3/14
CHECKED BY D. HAWKINS DATE 3/14
DWG. NO. 25

REVISIONS						SHEET NO.
NO.	BY	DATE	NO.	BY	DATE	S-91
1			3			TOTAL SHEETS
2			4			266

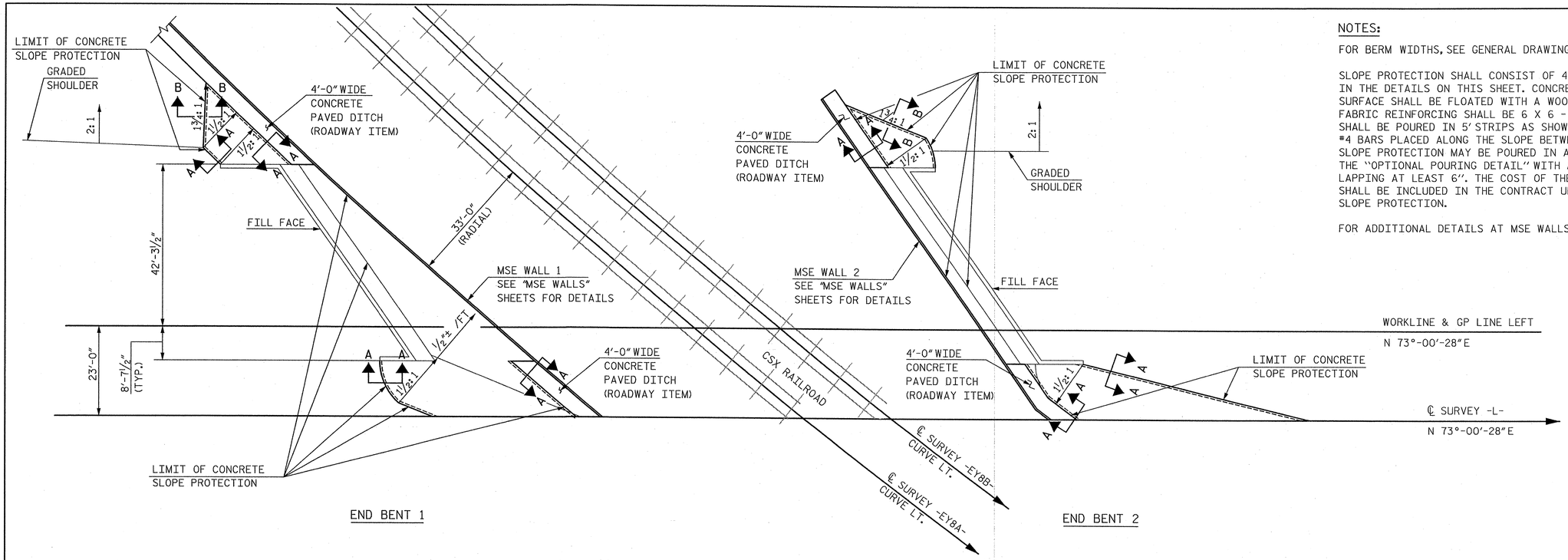

SEE RIGHT BRIDGE FOR SLOPE PROTECTION RIGHT OF ℄ SURVEY -L-

PLAN

NOTES:

FOR BERM WIDTHS, SEE GENERAL DRAWING.

SLOPE PROTECTION SHALL CONSIST OF 4" POURED-IN-PLACE CONCRETE PAVING AS SHOWN IN THE DETAILS ON THIS SHEET. CONCRETE SHALL BE CLASS "B". THE CONCRETE SURFACE SHALL BE FLOATED WITH A WOODEN FLOAT AND FINISHED. WELDED WIRE FABRIC REINFORCING SHALL BE 6 X 6 - W1.4 X W1.4, 60" WIDE. SLOPE PROTECTION SHALL BE POURED IN 5' STRIPS AS SHOWN IN THE "POURING DETAIL" WITH 2'-0" LONG #4 BARS PLACED ALONG THE SLOPE BETWEEN STRIPS AT 1'-6" MAXIMUM SPACING. SLOPE PROTECTION MAY BE POURED IN ALTERNATE 4' AND 5' STRIPS AS SHOWN IN THE "OPTIONAL POURING DETAIL" WITH ADJACENT RUNS OF WELDED WIRE FABRIC LAPPING AT LEAST 6". THE COST OF THE WELDED WIRE FABRIC AND #4 BARS, IF USED, SHALL BE INCLUDED IN THE CONTRACT UNIT PRICE BID PER SQUARE YARD FOR SLOPE PROTECTION.

FOR ADDITIONAL DETAILS AT MSE WALLS, SEE "MSE WALLS", SHEET 2 OF 3.

BRIDGE @ STA. 252+73.29 -L- LEFT LANE	4 INCH SLOPE PROTECTION	* WELDED WIRE FABRIC 60 INCHES WIDE
	SQUARE YARDS	APPROX. L.F.
END BENT 1	203.5	428.0
END BENT 2	134.7	278.4

* QUANTITY SHOWN IS BASED ON 5' POURS.

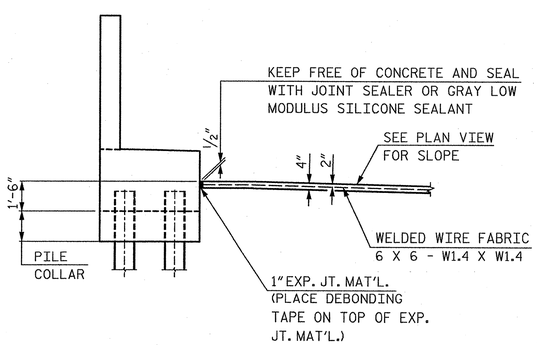

SECTION AT END BENT

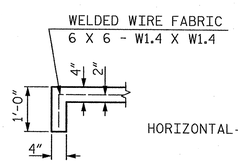

SECTION A-A

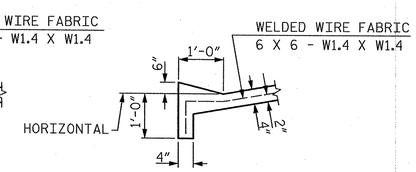

SECTION B-B

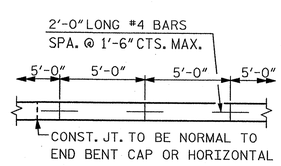

STRIP WIDTHS MAY VARY IN CURVED PORTION.

POURING DETAIL

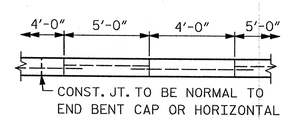

POUR A 4'-0" STRIP FIRST. STRIP WIDTHS MAY VARY IN CURVED PORTION.

OPTIONAL POURING DETAIL

PROJECT NO. R-2707B

CLEVELAND COUNTY

STATION: 252+73.29 -L-

NORTH CAROLINA PROFESSIONAL SEAL 12916 ENGINEER PAUL J. BARBER 6/26/12

STATE OF NORTH CAROLINA
DEPARTMENT OF TRANSPORTATION
RALEIGH

SLOPE PROTECTION DETAILS

LEFT LANE

HNTB NORTH CAROLINA, P.C.
NC License No. C-1554
343 E. Six Forks Rd., Suite 200, Raleigh, N.C. 27609

DRAWN BY J. BAYNE DATE 6/12
CHECKED BY P. BARBER DATE 6/12

DWG. NO. 26

REVISIONS						
NO.	BY	DATE	NO.	BY	DATE	
1			3			
2			4			

SHEET NO. S-92

TOTAL SHEETS 266

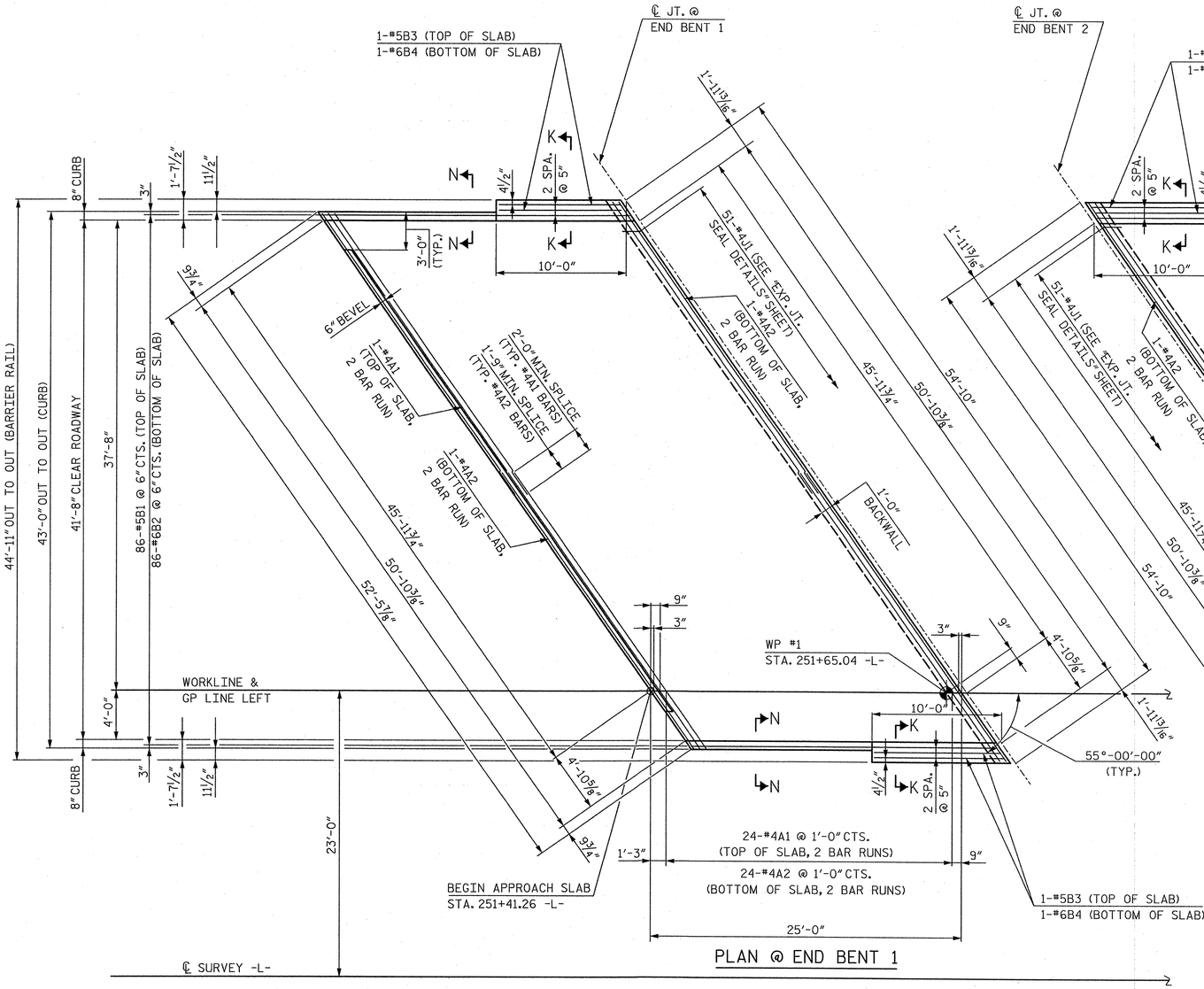

PLAN @ END BENT 1

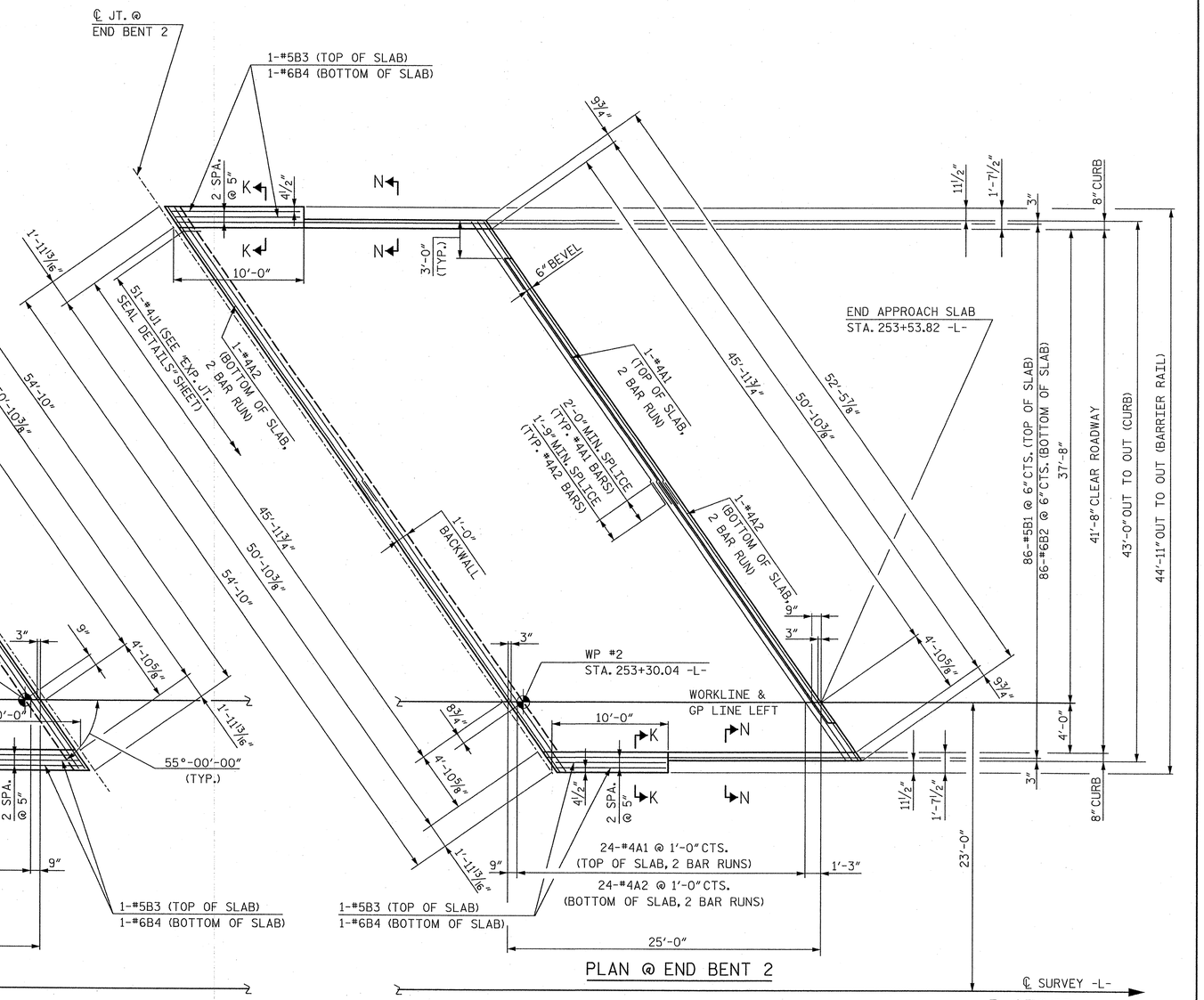

PLAN @ END BENT 2

PROJECT NO. R-2707B

CLEVELAND **COUNTY**

STATION: 252+73.29 -L-

SHEET 1 OF 3

NOTES:

FOR SECTION K-K AND SECTION N-N, SEE "BRIDGE APPROACH SLAB FOR FLEXIBLE PAVEMENT" SHEET 2 OF 3.

FOR APPROACH SLAB BILL OF MATERIAL, SEE BRIDGE APPROACH SLAB FOR FLEXIBLE PAVEMENT" SHEET 2 OF 3.

FOR BARRIER RAIL REINFORCING STEEL PLACEMENT AND BILL OF MATERIAL, SEE "BRIDGE APPROACH SLAB DETAILS" SHEET 3 OF 3.

FOR STANDARD EXPANSION JOINT SEAL DETAILS, SEE "EXPANSION JOINT SEAL DETAILS" SHEET.

NORTH CAROLINA PROFESSIONAL SEAL 12916 ENGINEER PAUL J. BARBER 6/26/12

STATE OF NORTH CAROLINA
DEPARTMENT OF TRANSPORTATION
RALEIGH

BRIDGE APPROACH SLAB FOR FLEXIBLE PAVEMENT

LEFT LANE

HNTB NORTH CAROLINA, P.C.
NC License No. C-1554
343 E. Six Forks Rd., Suite 200, Raleigh, N.C. 27609

DRAWN BY J. BAYNE DATE 6/12
CHECKED BY D. HAWKINS DATE 6/12

DWG. NO. 27

REVISIONS						SHEET NO.
NO.	BY	DATE	NO.	BY	DATE	S-93
1			3			TOTAL SHEETS
2			4			266

NOTES

APPROACH SLAB SHALL NOT BE CONSTRUCTED PRIOR TO COMPLETION OF THE BRIDGE DECK.

AREA BETWEEN THE WINGWALL AND APPROACH SLAB SHALL BE GRADED TO DRAIN THE WATER AWAY FROM THE FILL FACE OF THE BRIDGE AND SHALL BE PAVED. SEE ROADWAY PLANS.

FOR EXPANSION JOINT SEALS, SEE SPECIAL PROVISIONS.

FOR PLAN VIEW OF APPROACH SLABS AT END BENT 1 AND END BENT 2, SEE SHEET 1 OF 3.

BILL OF MATERIAL

APPROACH SLAB AT EB #1

BAR	NO.	SIZE	TYPE	LENGTH	WEIGHT
∗A1	50	#4	STR	28′-3″	944
A2	52	#4	STR	28′-1″	975
∗B1	86	#5	STR	24′-3″	2,175
B2	86	#6	STR	24′-6″	3,165
∗B3	4	#5	STR	9′-10″	41
B4	4	#6	STR	9′-10″	59
∗J1	51	#4	1	1′-5″	48
REINFORCING STEEL ∗∗				LBS.	4,199
∗EPOXY COATED REINFORCING STEEL ∗∗				LBS.	3,208
CLASS AA CONCRETE ∗∗				C. Y.	47.6

APPROACH SLAB AT EB #2

BAR	NO.	SIZE	TYPE	LENGTH	WEIGHT
∗A1	50	#4	STR	28′-3″	944
A2	52	#4	STR	28′-1″	975
∗B1	86	#5	STR	24′-3″	2,175
B2	86	#6	STR	24′-6″	3,165
∗B3	4	#5	STR	9′-10″	41
B4	4	#6	STR	9′-10″	59
∗J1	51	#4	1	1′-5″	48
REINFORCING STEEL ∗∗				LBS.	4,199
∗EPOXY COATED REINFORCING STEEL ∗∗				LBS.	3,208
CLASS AA CONCRETE ∗∗				C. Y.	47.6

BAR TYPE

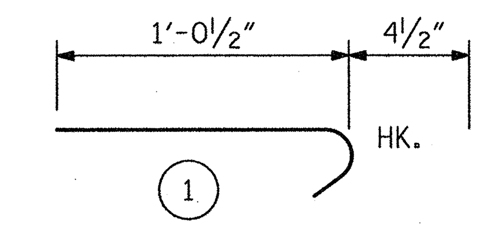

ALL BAR DIMENSIONS ARE OUT TO OUT

∗∗ QUANTITIES FOR BARRIER RAIL ARE NOT INCLUDED. SEE SHEET 3 OF 3.

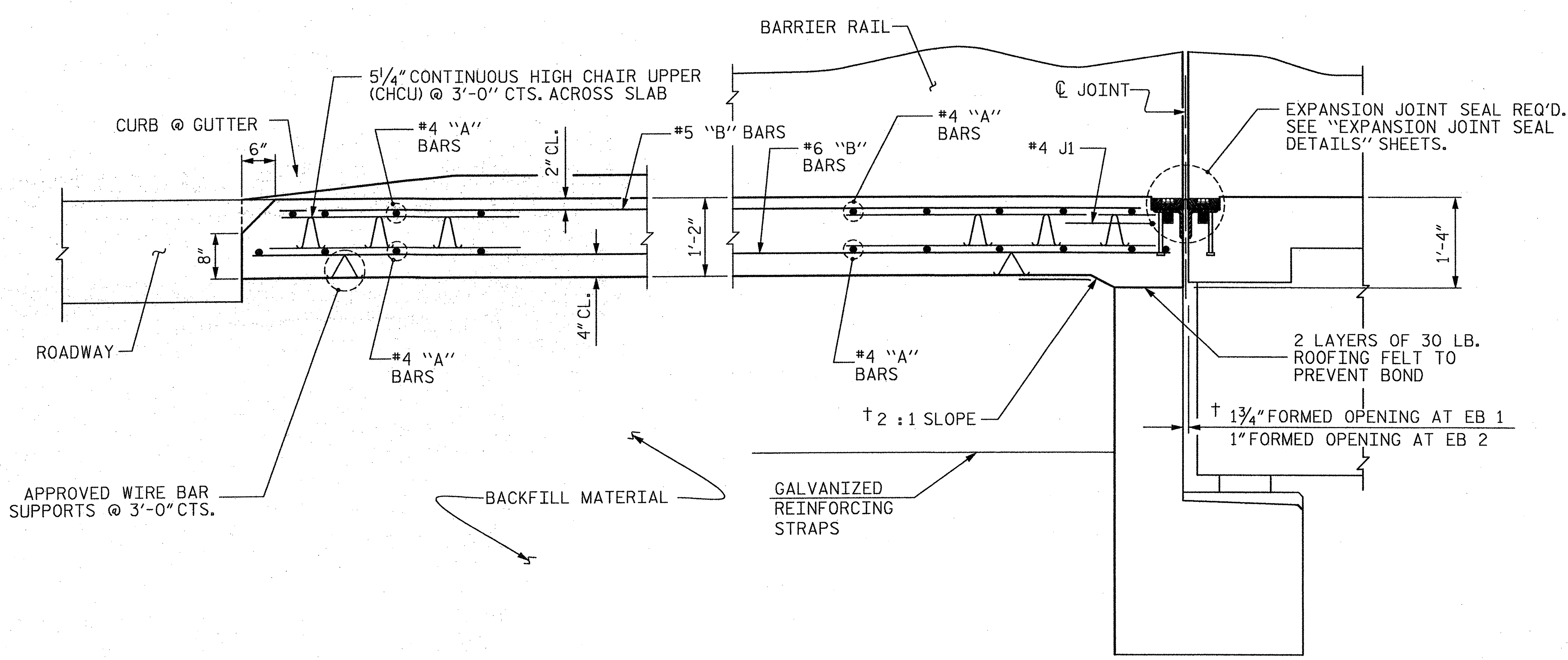

† NORMAL TO END BENT

SECTION THRU SLAB

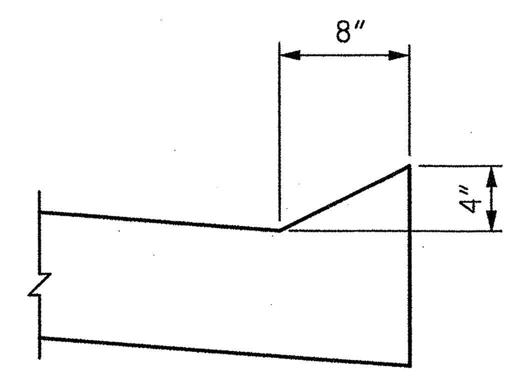

SECTION N-N

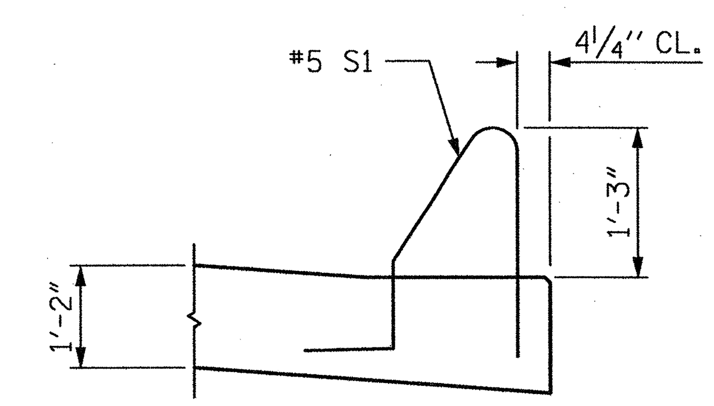

SECTION K-K

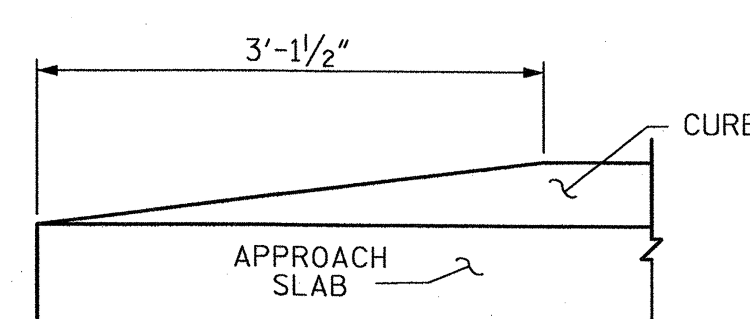

END OF CURB WITHOUT SHOULDER BERM GUTTER

CURB DETAILS

SPLICE LENGTHS

BAR SIZE	EPOXY COATED	UNCOATED
#4	2′-0″	1′-9″
#5	2′-6″	2′-2″
#6	3′-10″	2′-7″

PROJECT NO. R-2707B

CLEVELAND COUNTY

STATION: 252+73.29 -L-

SHEET 2 OF 3

STATE OF NORTH CAROLINA
DEPARTMENT OF TRANSPORTATION
RALEIGH

STANDARD

BRIDGE APPROACH SLAB FOR FLEXIBLE PAVEMENT

LEFT LANE

NORTH CAROLINA PROFESSIONAL SEAL 12916 ENGINEER PAUL J. BARBER 3/18/14

REVISIONS						SHEET NO.
NO.	BY:	DATE:	NO.	BY:	DATE:	S-94
1			3			TOTAL SHEETS
2			4			266

HNTB NORTH CAROLINA, P.C.
NC License No. C-1554
343 E. Six Forks Rd., Suite 200, Raleigh, N.C. 27609

DRAWN BY J. BAYNE DATE 3/14
CHECKED BY D. HAWKINS DATE 3/14
DWG. NO. 28

ASSEMBLED BY : DATE :
CHECKED BY : DATE :
DRAWN BY : EEM 3/95
CHECKED BY : VAP 3/95
REV. 5/7/03R RWW/JTE
REV. 5/1/06RR KMM/GM
REV. 10/1/11 MAA/GM

$$$$$$SYSTIME$$$$$
$$$$$$$$$$$$$$$$$$$$$$$DGN$$$$$$$$$$$$$$$$$$$$$$$$

STD. NO. BAS2

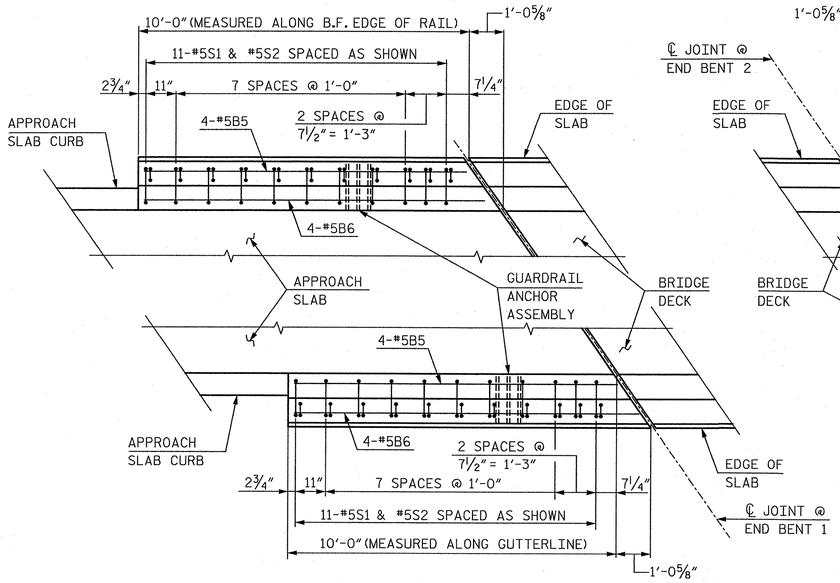

@ END BENT 1

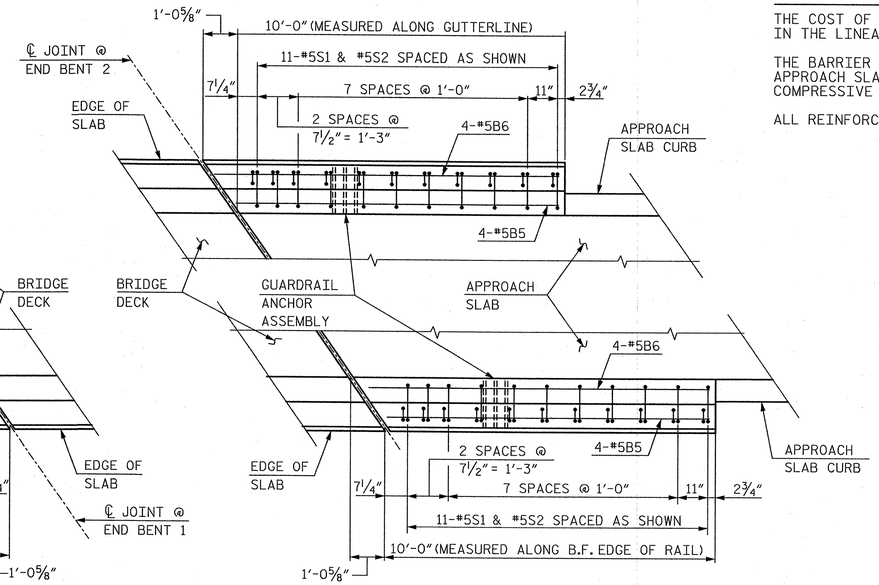

@ END BENT 2

NOTE: SEE "GUARDRAIL ANCHORAGE FOR BARRIER RAIL" SHEET FOR LOCATION OF ANCHORS AND POINTS OF ATTACHMENT.

PLAN - BARRIER RAIL EXTENSION

NOTES

THE COST OF THE BARRIER RAIL ON THE APPROACH SLAB SHALL BE INCLUDED IN THE LINEAR FOOT CONTRACT PRICE BID FOR "CONCRETE BARRIER RAIL".

THE BARRIER RAIL ON EACH APPROACH SLAB SHALL NOT BE CAST UNTIL ALL APPROACH SLAB CONCRETE HAS BEEN CAST AND HAS REACHED A MINIMUM COMPRESSIVE STRENGTH OF 3,000 PSI.

ALL REINFORCING STEEL IN BARRIER RAILS SHALL BE EPOXY COATED.

BAR TYPES

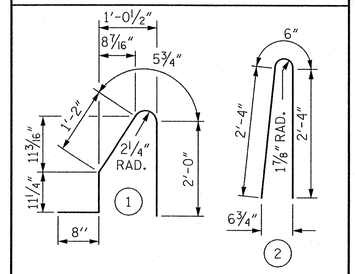

ALL BAR DIMENSIONS ARE OUT TO OUT

BILL OF MATERIAL

BARRIER RAIL ONLY

BAR	NO.	SIZE	TYPE	LENGTH	WEIGHT
*B5	16	#5	STR	9'-8"	161
*B6	16	#5	STR	9'-11"	165
*S1	44	#5	1	5'-3"	241
*S2	44	#5	2	5'-2"	237
*EPOXY COATED REINFORCING STEEL				LBS.	804
CLASS AA CONCRETE				C. Y.	4.2
CONCRETE BARRIER RAIL				42.1	LIN. FT.

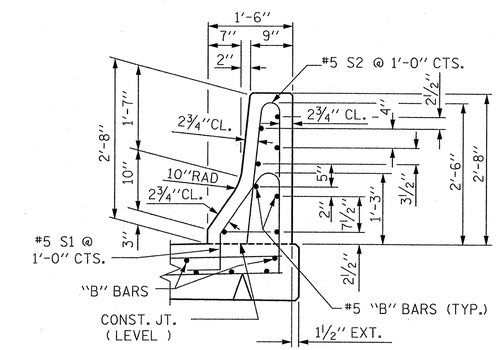

SECTION THRU RAIL

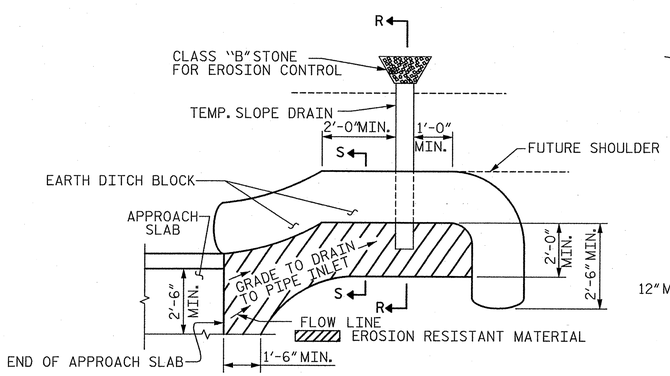

NOTE: IMMEDIATELY AFTER THE CONSTRUCTION OF THE APPROACH SLAB, THE CONTRACTOR SHALL PROVIDE TEMPORARY BERM AND SLOPE DRAIN. CONTRACTOR SHALL GRADE TO PIPE INLET AND PROVIDE EROSION RESISTANT MATERIAL AS SHOWN. THE EROSION RESISTANT MATERIAL SHALL BE EITHER 1) ASPHALT PLANT MIX, TYPE 1 OR TYPE 2, MIN. 2" DEPTH, 2) EROSION CONTROL MAT, OR 3) CONCRETE, AS DIRECTED BY THE ENGINEER. THE SLOPE DRAIN SHALL CONSIST OF A NON-PERFORATED TEMPORARY DRAINAGE PIPE, 12 INCHES IN DIAMETER.

PLAN VIEW

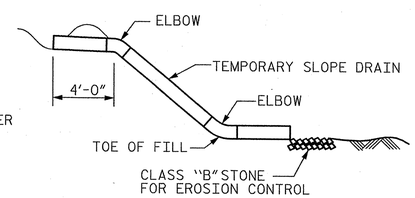

SECTION R-R

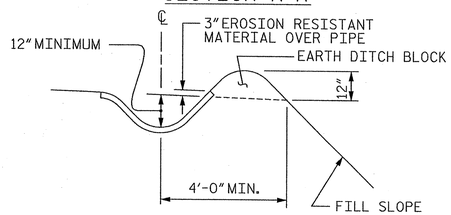

SECTION S-S

TEMPORARY BERM AND SLOPE DRAIN DETAILS

(TO BE USED WHEN SHOULDER BERM GUTTER IS REQUIRED)

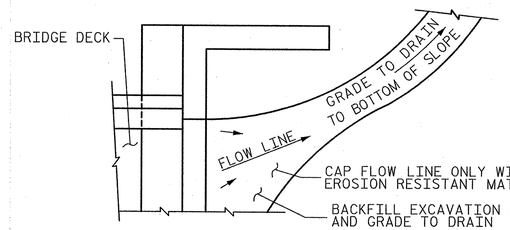

NOTE: IF THE APPROACH SLAB IS NOT CONSTRUCTED IMMEDIATELY AFTER THE BACKFILLING OF THE END BENT EXCAVATION, GRADE TO DRAIN TO THE BOTTOM OF THE SLOPE AND PROVIDE EROSION RESISTANT MATERIAL, SUCH AS FIBERGLASS ROVING OR AS DIRECTED BY THE ENGINEER TO PREVENT SOIL EROSION AND TO PROTECT THE AREA ADJACENT TO THE STRUCTURE. THE CONTRACTOR WILL BE REQUIRED TO REMOVE THESE MATERIALS PRIOR TO CONSTRUCTION OF THE APPROACH SLAB.

TEMPORARY DRAINAGE DETAIL

PROJECT NO. R-2707B

CLEVELAND COUNTY

STATION: 252+73.29 -L-

SHEET 3 OF 3

STATE OF NORTH CAROLINA
DEPARTMENT OF TRANSPORTATION
RALEIGH

STANDARD

BRIDGE APPROACH SLAB DETAILS

LEFT LANE

NORTH CAROLINA PROFESSIONAL SEAL 12916 ENGINEER PAUL J. BARBER 6/05/12

ASSEMBLED BY : J. BAYNE	DATE : 6/12		
CHECKED BY : D. HAWKINS	DATE : 6/12		
DRAWN BY : FCJ 11/88	REV. 5/7/03	RWW/JTE	
CHECKED BY : ARB 11/88	REV. 5/1/06	RRR MAA/KMM	
	REV. 10/1/11	MAA/GM	

HNTB
HNTB NORTH CAROLINA, P.C.
NC License No. C-1554
343 E. Six Forks Rd., Suite 200, Raleigh, N.C. 27609

DRAWN BY J. BAYNE DATE 6/12
CHECKED BY D. HAWKINS DATE 6/12
DWG. NO. 29

REVISIONS

NO.	BY:	DATE:	NO.	BY:	DATE:
1			3		
2			4		

SHEET NO. S-95

TOTAL SHEETS 266

STD. NO. BAS4

F.A. PROJECT NO. NHF-74(107)

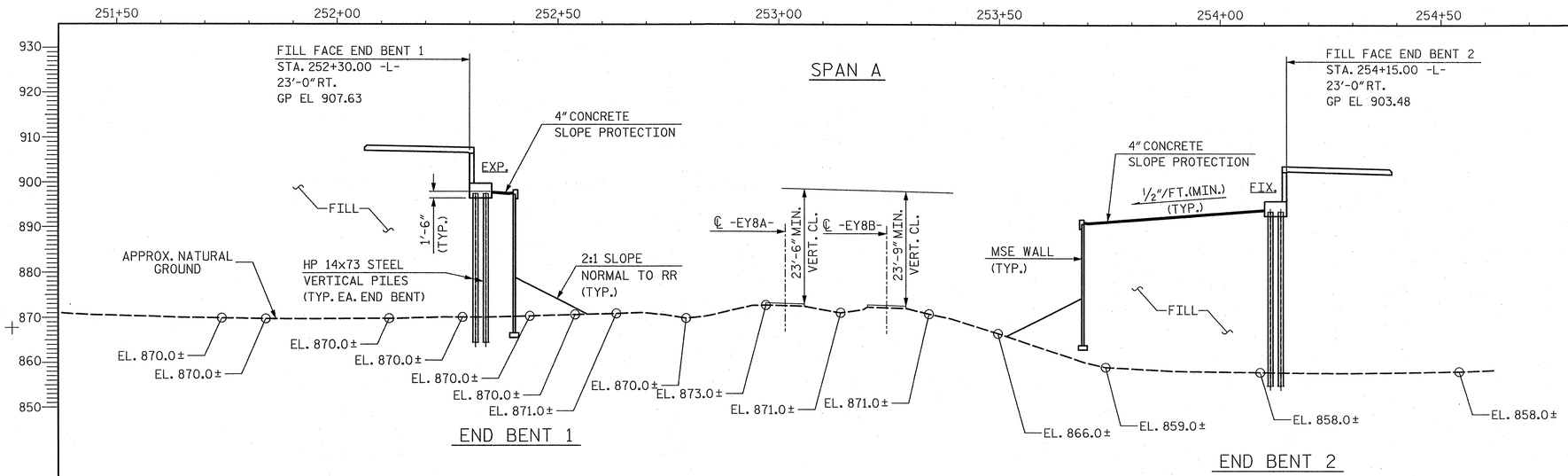

SECTION ALONG WORK LINE (RIGHT LANE)

(BENTS ON SECTION AT RIGHT ANGLES TO BENTS)

NOTES:

FOR NOTES, SEE GENERAL DRAWING, SHEET 3 OF 3.

TOP OF RAIL ELEVATIONS

STATION -EY8A-	LEFT	RIGHT	STATION -EY8B-	LEFT	RIGHT
23+50	876.25	876.45	22+50	875.40	875.50
24+00	875.79	876.09	23+00	874.96	875.06
24+50	875.58	875.38	23+50	874.46	874.56
25+00	874.78	875.08	24+00	873.97	874.09
25+50	874.41	874.64	24+50	873.50	873.61
26+00	873.98	874.18	25+00	873.03	873.13
26+50	873.53	873.72	25+50	872.55	872.70
27+00	873.09	873.26	26+00	872.06	872.19
27+50	872.68	872.84	26+50	871.69	871.79
28+00	872.27	872.43	27+00	871.29	871.43
28+50	871.86	872.03	27+50	871.04	871.15
29+00	871.53	871.72	28+00	870.78	870.86
29+50	871.21	871.40	28+50	870.45	870.56
30+00	870.86	871.06	29+00	870.11	870.21
30+50	870.51	870.70	29+50	869.72	869.83
31+00	870.10	870.30	30+00	869.32	869.42
31+50	869.73	869.92			

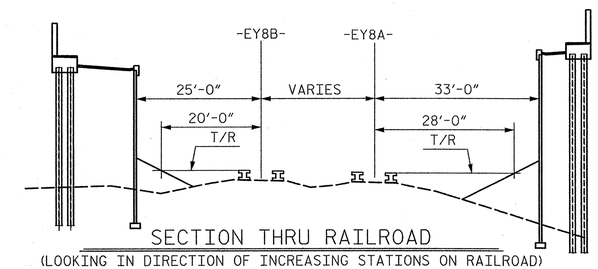

SECTION THRU RAILROAD

(LOOKING IN DIRECTION OF INCREASING STATIONS ON RAILROAD)
(SPAN LENGTHS BASED ON THIS SECTION)

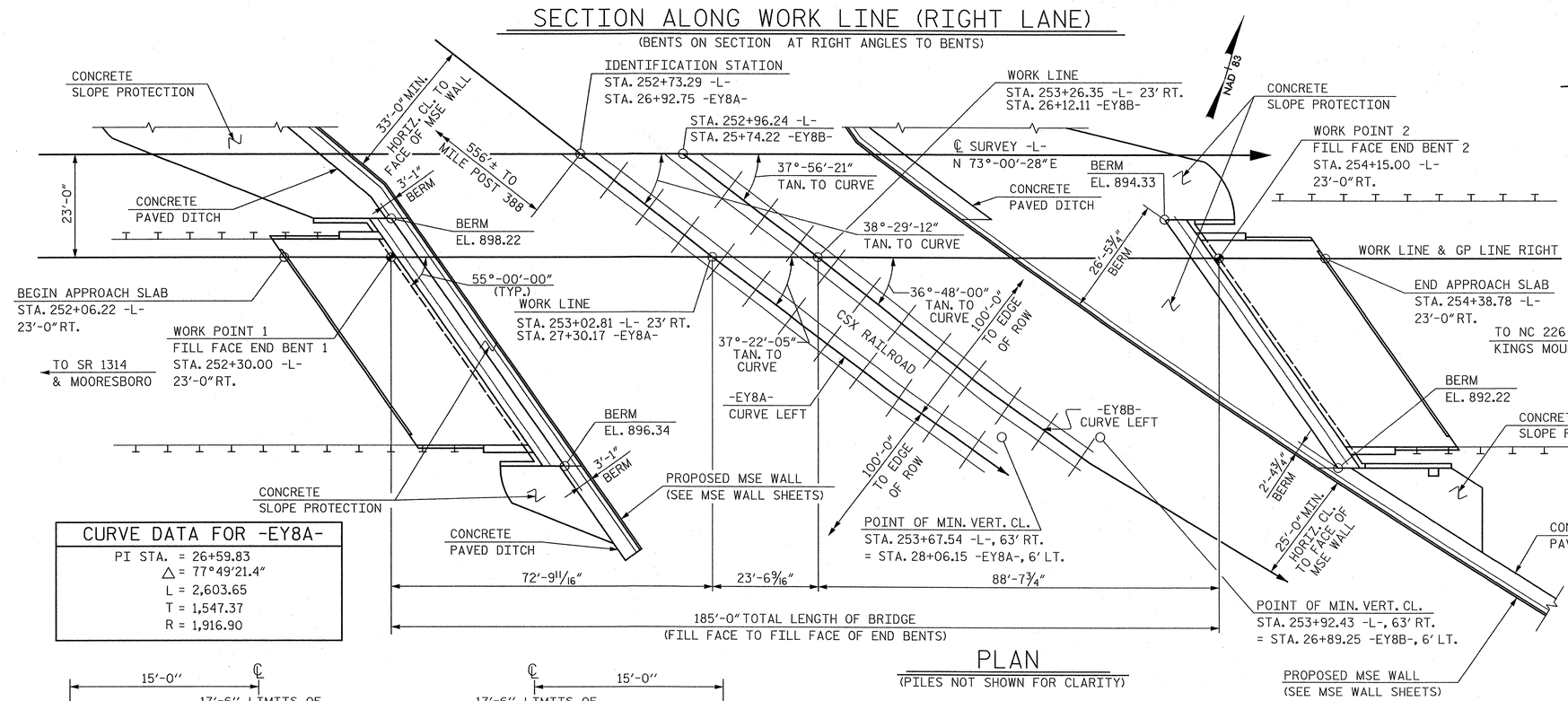

CURVE DATA FOR -EY8A-

PI STA. = 26+59.83
△ = 77°49'21.4"
L = 2,603.65
T = 1,547.37
R = 1,916.90

PLAN

(PILES NOT SHOWN FOR CLARITY)

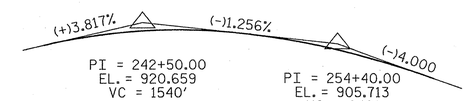

GRADE DATA -L-

CURVE DATA FOR -EY8B-

PI STA. = 25+24.50
△ = 77°-18'-13.6"
L = 2,571.80
T = 1,524.50
R = 1,906.16

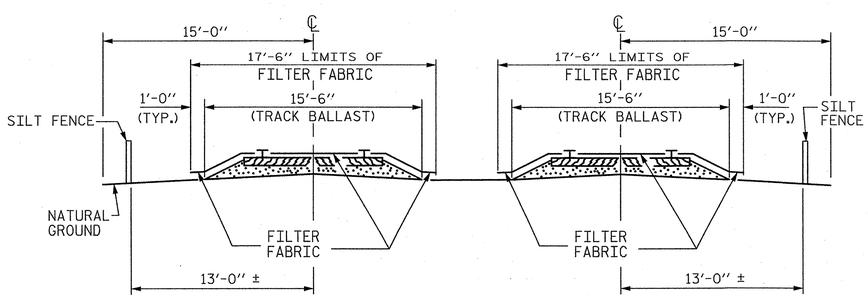

RAILROAD EROSION CONTROL DETAIL

NOTES

RAILROAD EROSION CONTROL MEASURES SHALL BE INSTALLED PRIOR TO PERFORMING ANY WORK IN THE RAILROAD RIGHT-OF-WAY.

ADDITIONAL EROSION CONTROL MEASURES FOR PROTECTION OF RAILROAD DITCHES MAY BE REQUIRED AS DIRECTED BY THE ENGINEER.

NO SEPARATE PAYMENT WILL BE MADE FOR RAILROAD EROSION CONTROL MEASURES.

LIMITS OF SILT FENCE AND FILTER FABRIC PARALLEL TO RAILROAD SHALL EXTEND A MINIMUM OF 25'-0" OUTSIDE EDGE OF SUPERSTRUCTURE OR TOE OF SLOPE ON CONSTRUCTION. A GREATER LENGTH OF SILT FENCE OR FILTER FABRIC MAY BE REQUIRED IF SO DIRECTED BY THE ENGINEER.

FILTER FABRIC TO BE NAILED TO TIMBER RAIL TIES WITH PRIME SOURCE "GRIP CAP" OR EQUIVALENT. FILTER FABRIC ON SHOULDER TO BE SECURED AS DIRECTED BY THE ENGINEER AND RAILROAD.

PROJECT NO. R-2707B
CLEVELAND COUNTY
STATION: 252+73.29 -L-
26+92.75 -EY8A-

BRIDGE NO. 460
SHEET 1 OF 3 CSX MILEPOST SF 387.9

STATE OF NORTH CAROLINA
DEPARTMENT OF TRANSPORTATION
RALEIGH

GENERAL DRAWING
FOR BRIDGE OVER
CSX RAILROAD ON US 74
BETWEEN SR 1314 AND NC 226
RIGHT LANE

NORTH CAROLINA PROFESSIONAL SEAL 12916 ENGINEER PAUL J. BARBER 6/25/12

HNTB
HNTB NORTH CAROLINA, P.C.
NC License No. C-1554
343 E. Six Forks Rd., Suite 200, Raleigh, N.C. 27609

DRAWN BY M. WRIGHT DATE 6/12
CHECKED BY P. BARBER DATE 6/12
DWG. NO. 1

REVISIONS						SHEET NO.
NO.	BY	DATE	NO.	BY	DATE	S-96
1			3			TOTAL SHEETS
2			4			266

STR. #4

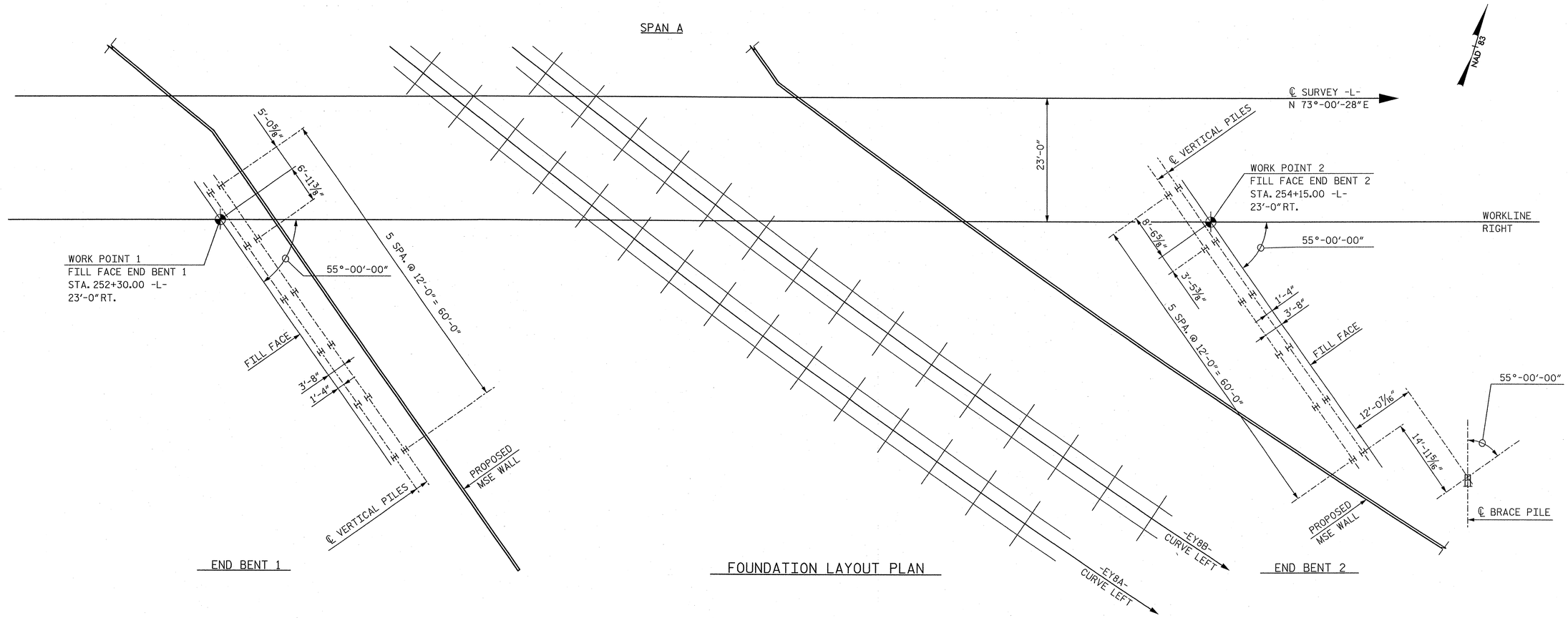

FOUNDATION NOTES:

ALL DIMENSIONS ARE PARALLEL OR NORMAL TO FILL FACES.

INDICATES PILE BATTER IN DIRECTION SHOWN. BRACE PILES @ END BENT WINGS ARE TO BE BATTERED @ 3:12.

ALL PILE DIMENSIONS ARE TO CENTERS OF PILES AT BOTTOM OF END BENT OR WINGWALL.

PILES AT END BENT 1 AND END BENT 2 ARE HP 14x73 STEEL PILES.

FOR FOUNDATION ELEVATIONS AND DETAILS, SEE END BENT DETAILS.

PROJECT NO. R-2707B
CLEVELAND COUNTY
STATION: 252+73.29 -L-

NORTH CAROLINA PROFESSIONAL SEAL 12916 ENGINEER PAUL J. BARBER 8/20/12

STATE OF NORTH CAROLINA
DEPARTMENT OF TRANSPORTATION
RALEIGH

GENERAL DRAWING

FOUNDATION LAYOUT

RIGHT LANE

HNTB
HNTB NORTH CAROLINA, P.C.
NC License No. C-1554
343 E. Six Forks Rd., Suite 200, Raleigh, N.C. 27609

DRAWN BY M. WRIGHT DATE 6/12
CHECKED BY P. BARBER DATE 6/12
DWG. NO. 2

REVISIONS						SHEET NO.
NO.	BY	DATE	NO.	BY	DATE	S-97
1			3			TOTAL SHEETS
2			4			266

BENCHMARK #10 - 8" NAIL IN ROOT OF 18" WHITE PINE 91.16' LEFT OF -L- STA 249+98.11, EL = 881.23'

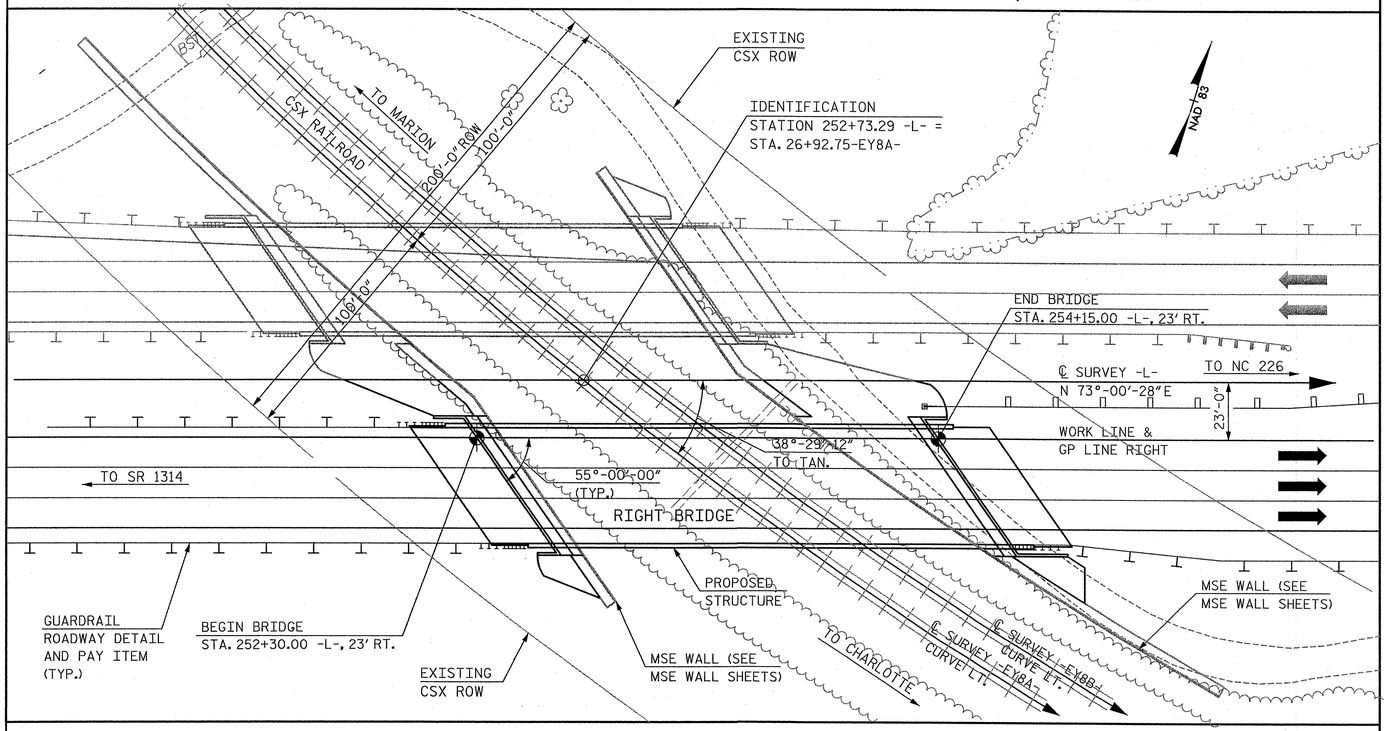

LOCATION SKETCH

NOTE: FOR UTILITY INFORMATION, SEE UTILITY PLANS AND SPECIAL PROVISIONS.

GENERAL NOTES

ASSUMED LIVE LOAD = HL-93 OR ALTERNATE LOADING.

FOR OTHER DESIGN DATA AND GENERAL NOTES, SEE SHEET SN.

FOR EROSION CONTROL MEASURES SEE EROSION CONTROL PLANS.

THIS BRIDGE HAS BEEN DESIGNED IN ACCORDANCE WITH THE AASHTO LRFD BRIDGE DESIGN SPECIFICATIONS.

ALL STRUCTURAL STEEL SHALL BE AASHTO M270 GRADE 50W AND PAINTED IN ACCORDANCE WITH SYSTEM 4 OF ARTICLE 442-8 OF THE STANDARD SPECIFICATIONS UNLESS OTHERWISE NOTED ON THE PLANS.

REMOVABLE FORMS MAY BE USED IN LIEU OF METAL STAY-IN-PLACE FORMS IN ACCORDANCE WITH ARTICLE 420-3 OF THE STANDARD SPECIFICATIONS.

FOR MAINTENANCE AND PROTECTION OF TRAFFIC BENEATH PROPOSED STRUCTURE, SEE SPECIAL PROVISIONS.

THE CLASS AA CONCRETE IN THE BRIDGE DECK SHALL CONTAIN FLY ASH OR GROUND GRANULATED BLAST FURNACE SLAG AT THE SUBSTITUTION RATE SPECIFIED IN ARTICLE 1024-1 AND IN ACCORDANCE WITH ARTICLES 1024-5 AND 1024-6 OF THE STANDARD SPECIFICATIONS. NO PAYMENT WILL BE MADE FOR THIS SUBSTITUTION AS IT IS CONSIDERED INCIDENTAL TO THE COST OF THE REINFORCED CONCRETE DECK SLAB.

THE CONTRACTOR SHALL PROVIDE INDEPENDENT ASSURANCE SAMPLES OF REINFORCING STEEL AS FOLLOWS:
FOR PROJECTS REQUIRING UP TO 400 TONS OF REINFORCING STEEL, ONE 30 INCH SAMPLE OF EACH SIZE BAR USED, AND
FOR PROJECTS REQUIRING OVER 400 TONS OF REINFORCING STEEL, TWO 30 INCH SAMPLES OF EACH SIZE BAR USED.
THE BARS FROM WHICH THE SAMPLES ARE TAKEN MUST THEN BE SPLICED WITH REPLACEMENT BARS OF THE SIZE AND LENGTH OF THE SAMPLE, PLUS A MINIMUM LAP SPLICE OF THIRTY BAR DIAMETERS. PAYMENT FOR THE SAMPLES OF REINFORCING STEEL SHALL BE CONSIDERED INCIDENTAL TO VARIOUS PAY ITEMS.

NEEDLE BEAMS WILL NOT BE ALLOWED UNLESS OTHERWISE CALLED FOR ON THE PLANS OR APPROVED BY THE ENGINEER.

FOR SUBMITTAL OF WORKING DRAWINGS, SEE SPECIAL PROVISIONS.

FOR FALSEWORK AND FORMWORK, SEE SPECIAL PROVISIONS.

FOR CRANE SAFETY, SEE SPECIAL PROVISIONS.

THE RAILROAD TRACK TOP OF RAIL ELEVATIONS SHOWN ON THE PLANS ARE FROM THE BEST INFORMATION AVAILABLE. PRIOR TO BEGINNING BRIDGE CONSTRUCTION, VERIFY THE TOP OF RAIL ELEVATIONS AND REPORT ANY VARIATIONS TO THE ENGINEER. ANY PLAN REVISIONS NECESSARY TO ACHIEVE THE REQUIRED MINIMUM VERTICAL CLEARANCE WILL BE PROVIDED BY THE DEPARTMENT.

FOR GROUT FOR STRUCTURES, SEE SPECIAL PROVISIONS.

THIS BRIDGE IS LOCATED IN SEISMIC ZONE 1.

FOR PILES, SEE SECTION 450 OF THE STANDARD SPECIFICATIONS.

PILES AT END BENT NO. 1 ARE DESIGNED FOR A FACTORED RESISTANCE OF 105 TONS PER PILE.

DRIVE PILES AT END BENT NO. 1 TO A REQUIRED DRIVING RESISTANCE OF 175 TONS PER PILE.

PILES AT END BENT NO. 2 ARE DESIGNED FOR A FACTORED RESISTANCE OF 105 TONS PER PILE.

DRIVE PILES AT END BENT NO. 2 TO A REQUIRED DRIVING RESISTANCE OF 175 TONS PER PILE.

TOTAL BILL OF MATERIAL

	REINFORCED CONCRETE DECK SLAB	GROOVING BRIDGE FLOORS	CLASS A CONCRETE	BRIDGE APPROACH SLABS, STATION 252+73.29 -L- (RIGHT LANE)	REINFORCING STEEL	STRUCTURAL STEEL	HP 14x73 STEEL PILES		CONCRETE BARRIER RAIL	72" CHAIN LINK FENCE	4" SLOPE PROTECTION	ELASTOMERIC BEARINGS	EXPANSION JOINT SEALS
	SQ. FT.	SQ. FT.	CU. YDS.	LUMP SUM	LBS.	APPROX. LBS	NO.	L.F.	L.F.	L.F.	SQ. YD.	LUMP SUM	LUMP SUM
SUPERSTRUCTURE	8,984.0	9,832.0	—	LUMP SUM	—	469,814	—	—	406.4	358.0	—	LUMP SUM	LUMP SUM
END BENT 1	—	—	63.9	—	11,357	—	12	720	—	—	117.4	—	—
END BENT 2	—	—	68.1	—	11,950	—	13	1,105	—	—	310.8	—	—
TOTAL	8,984.0	9,832.0	132.0	LUMP SUM	23,307	469,814	25	1,825	406.4	358.0	428.2	LUMP SUM	LUMP SUM

PROJECT NO. R-2707B
CLEVELAND COUNTY
STATION: 252+73.29 -L-

SHEET 3 OF 3

NORTH CAROLINA PROFESSIONAL SEAL 12916 ENGINEER PAUL J. BARBER 8/25/12

STATE OF NORTH CAROLINA
DEPARTMENT OF TRANSPORTATION
RALEIGH

GENERAL DRAWING
LOCATION SKETCH,
GENERAL NOTES AND
TOTAL BILL OF MATERIAL
RIGHT LANE

HNTB NORTH CAROLINA, P.C.
NC License No. C-1554
343 E. Six Forks Rd., Suite 200, Raleigh, N.C. 27609

DRAWN BY J. BAYNE DATE 6/12
CHECKED BY P. BARBER DATE 6/12
DWG. NO. 3

REVISIONS						SHEET NO.
NO.	BY	DATE	NO.	BY	DATE	S-98
1			3			TOTAL SHEETS
2			4			266

LOAD AND RESISTANCE FACTOR RATING (LRFR) SUMMARY FOR STEEL GIRDERS

LEVEL		VEHICLE	WEIGHT (W) (TONS)	CONTROLLING LOAD RATING (#)	MINIMUM RATING FACTORS (RF)	TONS = W × RF	STRENGTH I LIMIT STATE											SERVICE II LIMIT STATE						COMMENT NUMBER
							LIVE-LOAD FACTORS (γ_{LL})	MOMENT					SHEAR					LIVE-LOAD FACTORS (γ_{LL})	MOMENT					
								DISTRIBUTION FACTORS (DF)	RATING FACTOR	SPAN	GIRDER LOCATION	DISTANCE FROM LEFT END OF SPAN (ft)	DISTRIBUTION FACTORS (DF)	RATING FACTOR	SPAN	GIRDER LOCATION	DISTANCE FROM LEFT END OF SPAN (ft)		DISTRIBUTION FACTORS (DF)	RATING FACTOR	SPAN	GIRDER LOCATION	DISTANCE FROM LEFT END OF SPAN (ft)	
DESIGN LOAD RATING		HL-93 (INVENTORY)	N/A	1	1.09	--	1.75	0.86	1.09	A	EL	89.4	0.86	1.10	A	EL	163.5	1.30	0.86	1.70	A	EL	89.4	
		HL-93 (OPERATING)	N/A	--	1.41	--	1.35	0.86	1.41	A	EL	89.4	0.86	1.43	A	EL	163.5	1.00	0.86	2.21	A	EL	89.4	
		HS-20 (INVENTORY)	36.00	2	1.74	62.6	1.75	0.86	1.81	A	EL	89.4	0.86	1.74	A	EL	163.5	1.30	0.86	2.82	A	EL	89.4	
		HS-20 (OPERATING)	36.00	--	2.26	81.4	1.35	0.86	2.34	A	EL	89.4	0.86	2.26	A	EL	163.5	1.00	0.86	3.67	A	EL	89.4	
LEGAL LOAD RATING	SINGLE VEHICLE (SV)	SNSH	13.500	--	5.57	75.2	1.40	0.86	5.66	A	EL	89.4	0.86	5.57	A	EL	163.5	1.30	0.86	7.08	A	EL	89.4	
		SNGARBS2	20.000	--	3.84	76.8	1.40	0.86	3.96	A	EL	89.4	0.86	3.84	A	EL	163.5	1.30	0.86	4.96	A	EL	89.4	
		SNAGRIS2	22.000	--	3.52	77.4	1.40	0.86	3.66	A	EL	89.4	0.86	3.52	A	EL	163.5	1.30	0.86	4.58	A	EL	89.4	
		SNCOTTS3	27.250	--	2.77	75.5	1.40	0.86	2.81	A	EL	89.4	0.86	2.77	A	EL	163.5	1.30	0.86	3.51	A	EL	89.4	
		SNAGGRS4	34.925	--	2.21	77.2	1.40	0.86	2.25	A	EL	89.4	0.86	2.21	A	EL	163.5	1.30	0.86	2.81	A	EL	89.4	
		SNS5A	35.550	--	2.20	78.2	1.40	0.86	2.21	A	EL	89.4	0.86	2.20	A	EL	163.5	1.30	0.86	2.76	A	EL	89.4	
		SNS6A	39.950	--	1.97	78.7	1.40	0.86	1.98	A	EL	89.4	0.86	1.97	A	EL	163.5	1.30	0.86	2.48	A	EL	89.4	
		SNS7B	42.000	--	1.89	79.4	1.40	0.86	1.89	A	EL	89.4	0.86	1.90	A	EL	163.5	1.30	0.86	2.36	A	EL	89.4	
	TRUCK TRACTOR SEMI-TRAILER (TTST)	TNAGRIT3	33.000	--	2.37	78.2	1.40	0.86	2.41	A	EL	89.4	0.86	2.37	A	EL	163.5	1.30	0.86	3.02	A	EL	89.4	
		TNT4A	33.075	--	2.35	77.7	1.40	0.86	2.41	A	EL	89.4	0.86	2.35	A	EL	163.5	1.30	0.86	3.02	A	EL	89.4	
		TNT6A	41.600	--	1.93	80.3	1.40	0.86	1.93	A	EL	89.4	0.86	1.95	A	EL	163.5	1.30	0.86	2.42	A	EL	89.4	
		TNT7A	42.000	--	1.93	81.1	1.40	0.86	1.93	A	EL	89.4	0.86	1.93	A	EL	163.5	1.30	0.86	2.41	A	EL	89.4	
		TNT7B	42.000	--	1.88	79.0	1.40	0.86	1.95	A	EL	89.4	0.86	1.88	A	EL	163.5	1.30	0.86	2.44	A	EL	89.4	
		TNAGRIT4	43.000	--	1.83	78.7	1.40	0.86	1.89	A	EL	89.4	0.86	1.83	A	EL	163.5	1.30	0.86	2.36	A	EL	89.4	
		TNAGT5A	45.000	--	1.78	80.1	1.40	0.86	1.79	A	EL	89.4	0.86	1.78	A	EL	163.5	1.30	0.86	2.25	A	EL	89.4	
		TNAGT5B	45.000	3	1.75	78.8	1.40	0.86	1.79	A	EL	89.4	0.86	1.75	A	EL	163.5	1.30	0.86	2.24	A	EL	89.4	
FATIGUE		HL-93 (INVENTORY)	γ_{LL}=1.50	--	1.73																			

LOAD FACTORS:

DESIGN LOAD RATING FACTORS	LIMIT STATE	γ_{DC}	γ_{DW}
	STRENGTH I	1.25	1.50
	SERVICE II	1.00	1.00

NOTES:

MINIMUM RATING FACTORS ARE BASED ON THE STRENGTH I AND SERVICE II LIMIT STATES.

ALLOWABLE STRESS FOR SERVICE II LIMIT STATE ARE AS REQUIRED FOR DESIGN.

COMMENTS:

1.
2.
3.
4.

(#) CONTROLLING LOAD RATING

(1) DESIGN LOAD RATING (HL-93) **

(2) DESIGN LOAD RATING (HS-20) **

(3) LEGAL LOAD RATING **

** SEE CHART FOR VEHICLE TYPE

GIRDER LOCATION

I - INTERIOR GIRDER
EL - EXTERIOR LEFT GIRDER
ER - EXTERIOR RIGHT GIRDER

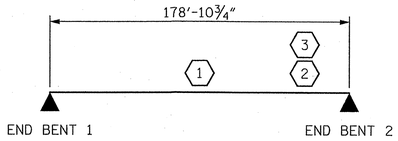

LRFR SUMMARY

NOTE: SPAN LENGTH PROVIDED IS BEARING TO BEARING LENGTH.

PROJECT NO. R-2707B
CLEVELAND COUNTY
STATION: 252+73.29 -L-

NORTH CAROLINA PROFESSIONAL SEAL 12916 ENGINEER PAUL J. BARBER 6/28/12

STATE OF NORTH CAROLINA
DEPARTMENT OF TRANSPORTATION
RALEIGH

STANDARD

LRFR SUMMARY FOR STEEL GIRDERS
(NON-INTERSTATE TRAFFIC)
RIGHT LANE

ASSEMBLED BY : J. BAYNE	DATE : 6/12
CHECKED BY : D. RAGAN	DATE : 6/12
DRAWN BY : MAA 1/08	REV. 11/12/08RR MAA/GM
CHECKED BY : GM/DI 2/08	REV. 10/1/11 MAA/GM

HNTB
HNTB NORTH CAROLINA, P.C.
NC License No. C-1554
343 E. Six Forks Rd., Suite 200, Raleigh, N.C. 27609

DRAWN BY J. BAYNE DATE 6/12
CHECKED BY D. RAGAN DATE 6/12
DWG. NO. 4

REVISIONS						SHEET NO.
NO.	BY:	DATE:	NO.	BY:	DATE:	S-99
1			3			TOTAL SHEETS
2			4			266

STD. NO. LRFR3

NOTES:

ALL HORIZONTAL DIMENSIONS ARE SHOWN NORMAL TO ℄ SURVEY UNLESS OTHERWISE NOTED.

PROVIDE 1¼″ HIGH BEAM BOLSTERS UPPER AT 4′-0″ CTS. ATOP THE METAL STAY-IN-PLACE FORMS TO SUPPORT THE BOTTOM MAT OF 'A' BARS. WHEN USING REMOVABLE FORMS, PROVIDE CONTINUOUS HIGH CHAIRS FOR METAL DECK (C.H.C.M.) @ 4′-0″ CTS. WITH A HEIGHT TO SUPPORT THE BOTTOM MAT OF 'A' BARS A CLEAR DISTANCE OF 2½″ ABOVE THE TOP OF THE REMOVABLE FORM.

NO CHAMFER IS REQUIRED ON CORNERS OF GIRDER BUILDUPS.

#5G1 BAR MAY BE SHIFTED SLIGHTLY, AS NECESSARY, TO CLEAR REINFORCING STEEL AND STIRRUPS.

DIRECTION OF CASTING DECK CONCRETE SHALL BE FROM THE FIXED BEARING END TOWARD THE EXPANSION BEARING END OF THE SPAN.

THE CONTRACTOR MAY, WHEN NECESSARY, PROPOSE A SCHEME FOR AVOIDING INTERFERENCE BETWEEN METAL STAY-IN-PLACE FORM SUPPORTS OR FORMS AND BEAM/GIRDER STIFFENERS OR CONNECTOR PLATES. THE PROPOSAL SHALL BE INDICATED, AS APPROPRIATE, ON EITHER THE STEEL WORKING DRAWINGS OR THE METAL STAY-IN-PLACE FORM WORKING DRAWINGS.

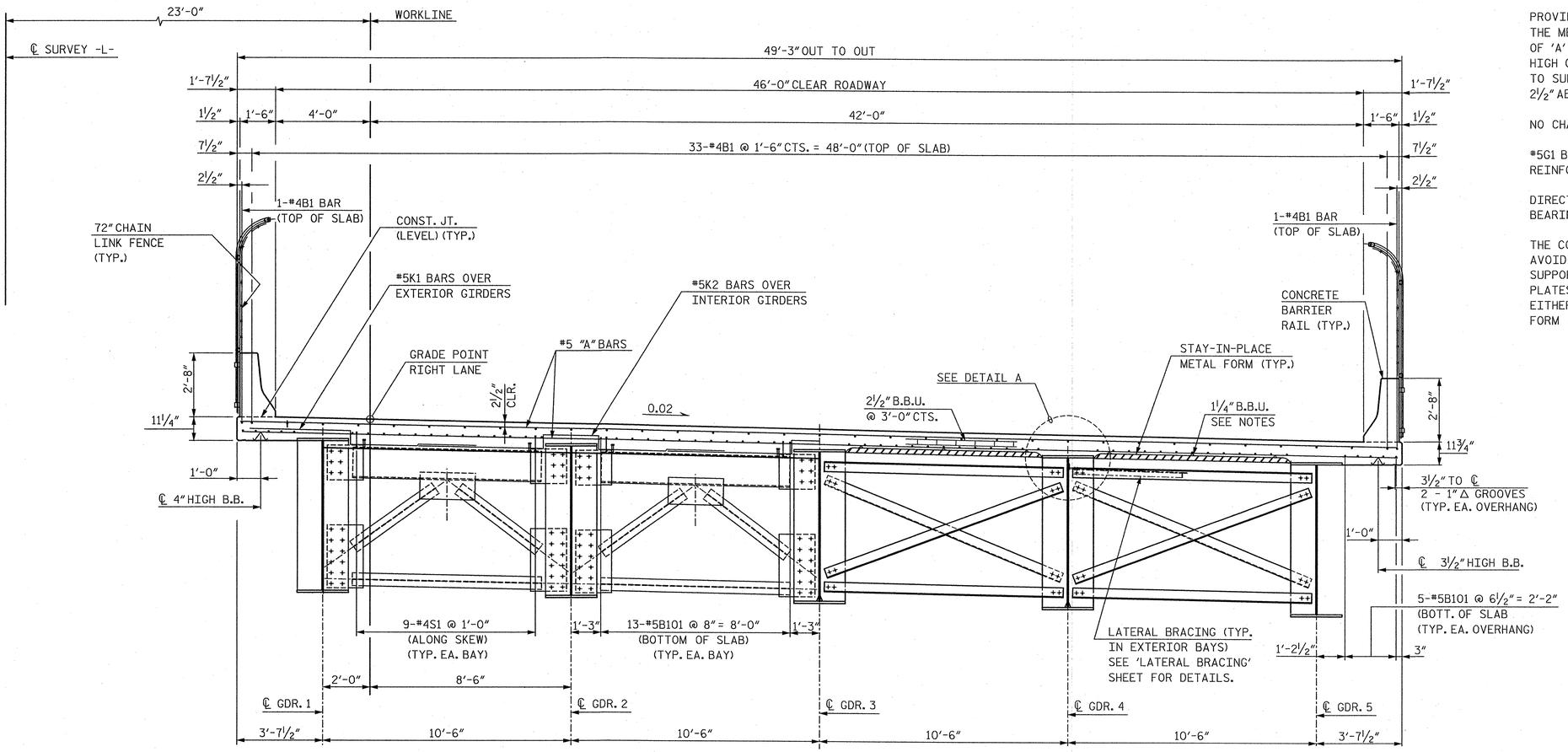

HALF SECTION AT END DIAPHRAGM

HALF SECTION AT INTERMEDIATE DIAPHRAGM

TYPICAL SECTION

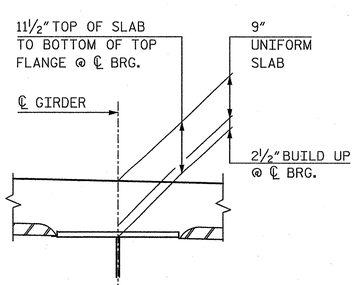

DETAIL A

PROJECT NO. R-2707B

CLEVELAND COUNTY

STATION: 252+73.29 -L-

SHEET 1 OF 2

STATE OF NORTH CAROLINA
DEPARTMENT OF TRANSPORTATION
RALEIGH

SUPERSTRUCTURE

TYPICAL SECTIONS

RIGHT LANE

HNTB NORTH CAROLINA, P.C.
NC License No. C-1554
343 E. Six Forks Rd., Suite 200, Raleigh, N.C. 27609

DRAWN BY J. BAYNE DATE 4/12
CHECKED BY P. BARBER DATE 4/12

DWG. NO. 5

REVISIONS						SHEET NO.
NO.	BY	DATE	NO.	BY	DATE	S-100
1			3			TOTAL SHEETS
2			4			2666

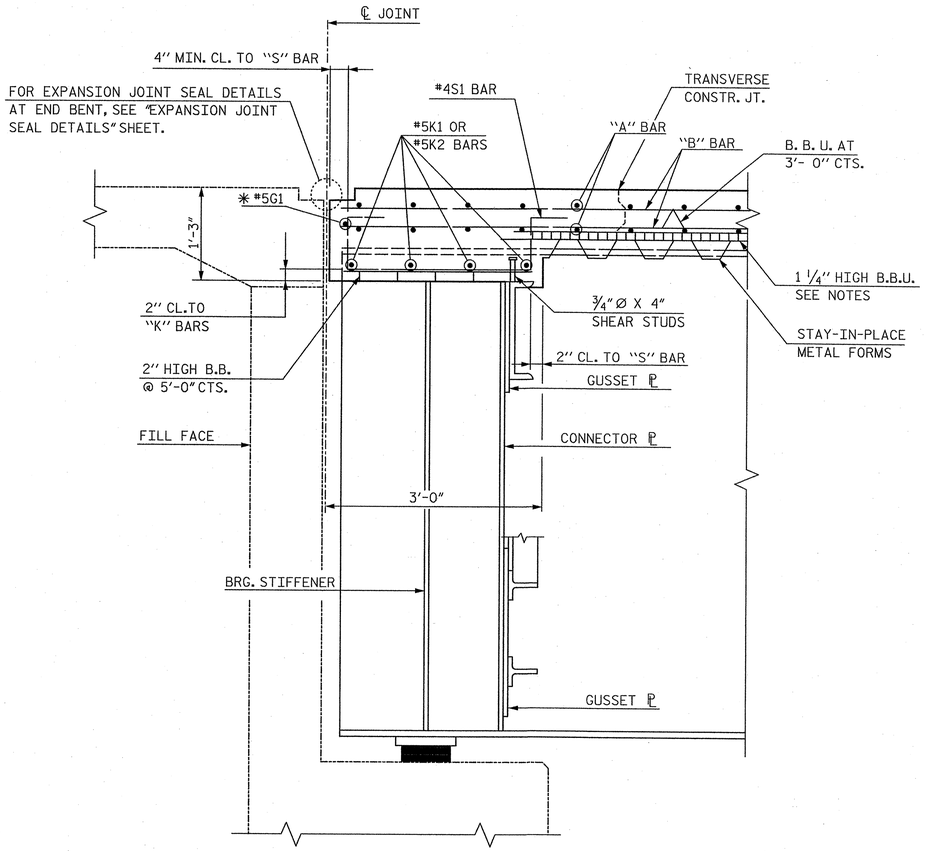

SECTION A-A

✳ #5 "G" BAR MAY BE SHIFTED SLIGHTLY, AS NECESSARY TO CLEAR REINFORCING STEEL AND STIRRUPS.

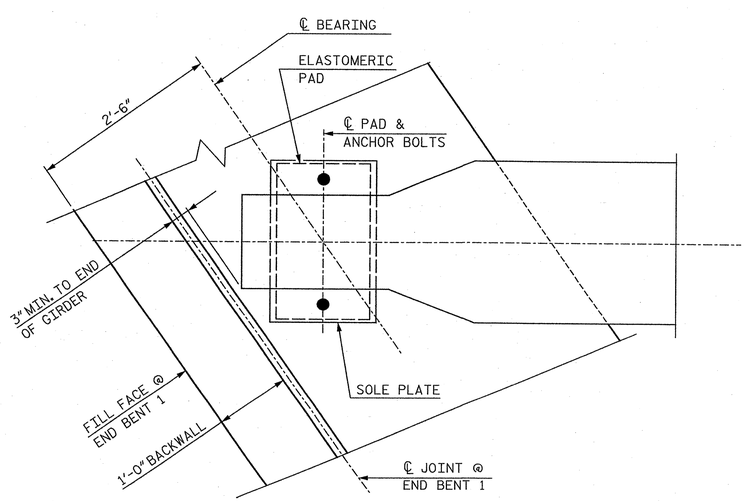

PLAN AT END BENT

END BENT 1 SHOWN, END BENT 2 SIMILAR

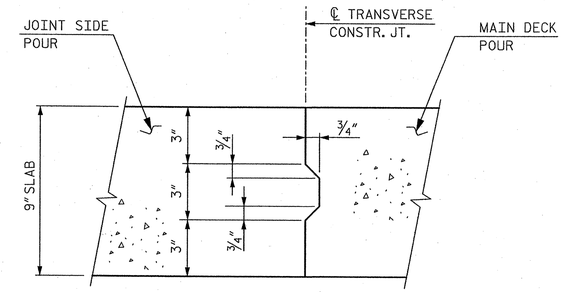

NOTE:
REINFORCING STEEL IN SLAB NOT SHOWN. REINFORCING STEEL SHALL BE CONTINUOUS THROUGH JOINT.

TRANSVERSE CONSTRUCTION JOINT

PROJECT NO. R-2707B
CLEVELAND COUNTY
STATION: 252+73.29 -L-

SHEET 2 OF 2

STATE OF NORTH CAROLINA
DEPARTMENT OF TRANSPORTATION
RALEIGH

SUPERSTRUCTURE

TYPICAL SECTIONS

RIGHT LANE

NORTH CAROLINA PROFESSIONAL SEAL 12916 ENGINEER PAUL J. BARBER 8/28/12

HNTB NORTH CAROLINA, P.C.
NC License No. C-1554
343 E. Six Forks Rd., Suite 200, Raleigh, N.C. 27609

DRAWN BY J. BAYNE DATE 5/12
CHECKED BY P. BARBER DATE 5/12
DWG. NO. 6

REVISIONS						SHEET NO.
NO.	BY	DATE	NO.	BY	DATE	S-101
1			3			TOTAL SHEETS
2			4			266

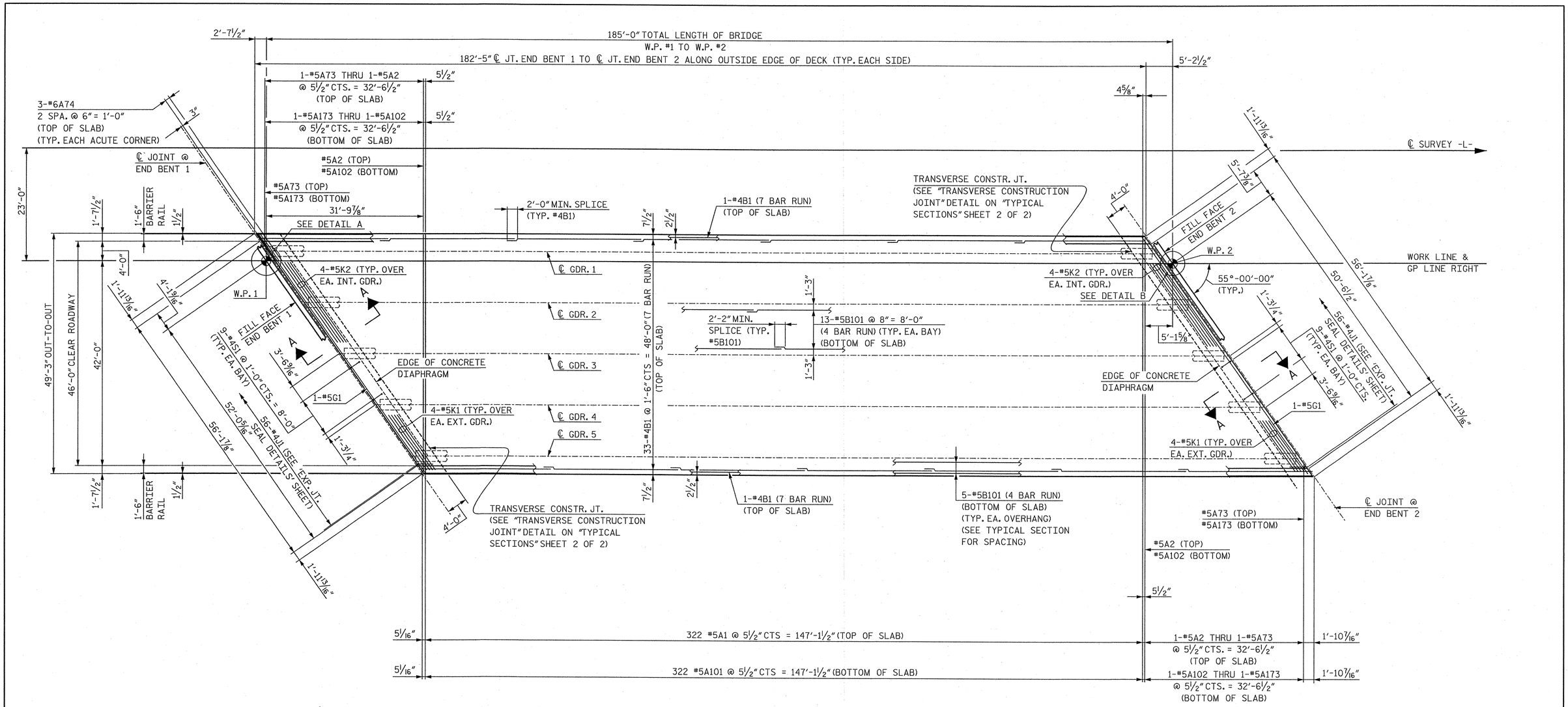

PLAN OF SPAN A

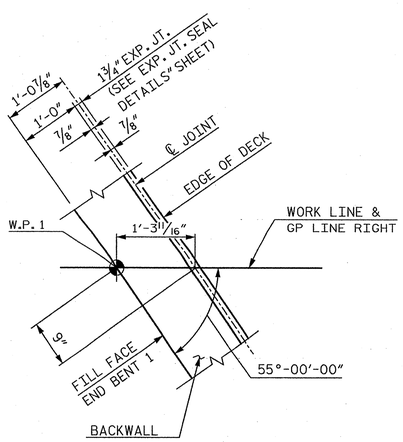

DETAIL A

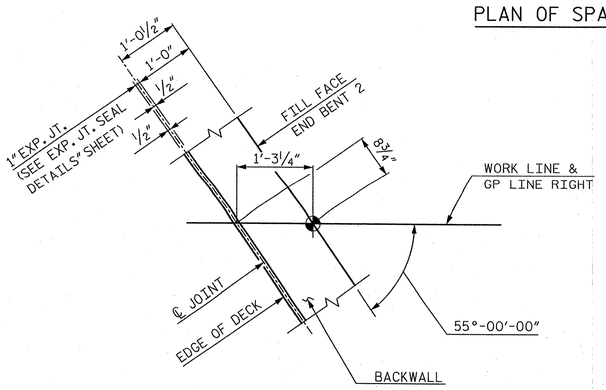

DETAIL B

PROJECT NO. R-2707B

CLEVELAND COUNTY

STATION: 252+73.29 -L-

STATE OF NORTH CAROLINA
DEPARTMENT OF TRANSPORTATION
RALEIGH

SUPERSTRUCTURE

PLAN OF SPAN A

RIGHT LANE

NORTH CAROLINA PROFESSIONAL SEAL 12916 ENGINEER PAUL J. BARBER 8/28/12

HNTB

HNTB NORTH CAROLINA, P.C.
NC License No. C-1554
343 E. Six Forks Rd., Suite 200, Raleigh, N.C. 27609

DRAWN BY J. BAYNE DATE 4/12
CHECKED BY P. BARBER DATE 5/12

DWG. NO. 7

REVISIONS						
NO.	BY	DATE	NO.	BY	DATE	
1			3			
2			4			

SHEET NO. S-102

TOTAL SHEETS 266

NOTES:

ALL DIMENSIONS ARE MEASURED ALONG ℄ GIRDERS UNLESS NOTED.

FOR BOLTED FIELD SPLICE DETAILS AND STRUCTURAL STEEL NOTES, SEE "FIELD SPLICE AND STRUCTURAL STEEL NOTES" SHEET.

FOR DIAPHRAGM DETAILS, SEE "STRUCTURAL STEEL DETAILS" SHEET.

FOR GIRDER ELEVATION & DETAILS, SEE "GIRDER DETAILS" SHEET.

FOR TOP FLANGE LATERAL BRACING DETAILS, SEE "TOP FLANGE LATERAL BRACING" SHEET.

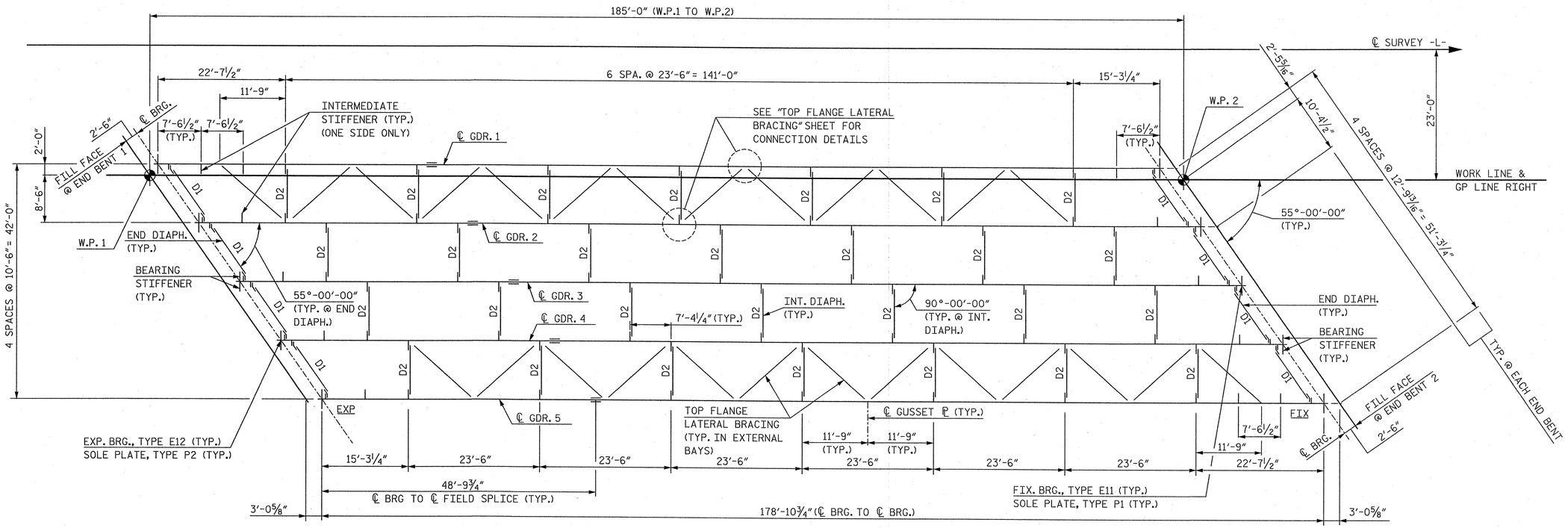

SPAN A

FRAMING PLAN

PROJECT NO. R-2707B

CLEVELAND COUNTY

STATION: 252+73.29 -L-

NORTH CAROLINA PROFESSIONAL SEAL 12916 ENGINEER PAUL J. BARBER 5/23/12

STATE OF NORTH CAROLINA
DEPARTMENT OF TRANSPORTATION
RALEIGH

SUPERSTRUCTURE

FRAMING PLAN

RIGHT LANE

HNTB NORTH CAROLINA, P.C.
NC License No. C-1554
343 E. Six Forks Rd., Suite 200, Raleigh, N.C. 27609

DRAWN BY J. BAYNE DATE 5/12
CHECKED BY P. BARBER DATE 5/12

DWG. NO. 8

REVISIONS						SHEET NO.
NO.	BY	DATE	NO.	BY	DATE	S-103
1			3			TOTAL SHEETS
2			4			266

NOTES:

FOR STRUCTURAL STEEL NOTES, SEE "FIELD SPLICE AND STRUCTURAL STEEL NOTES" SHEET.

ALL DIMENSIONS ARE HORIZONTAL OR VERTICAL UNLESS NOTED OTHERWISE.

STUDS MAY BE MOVED SLIGHTLY TO AVOID BOLTS IN FLANGE SPLICE AT BOLTED FIELD SPLICE.

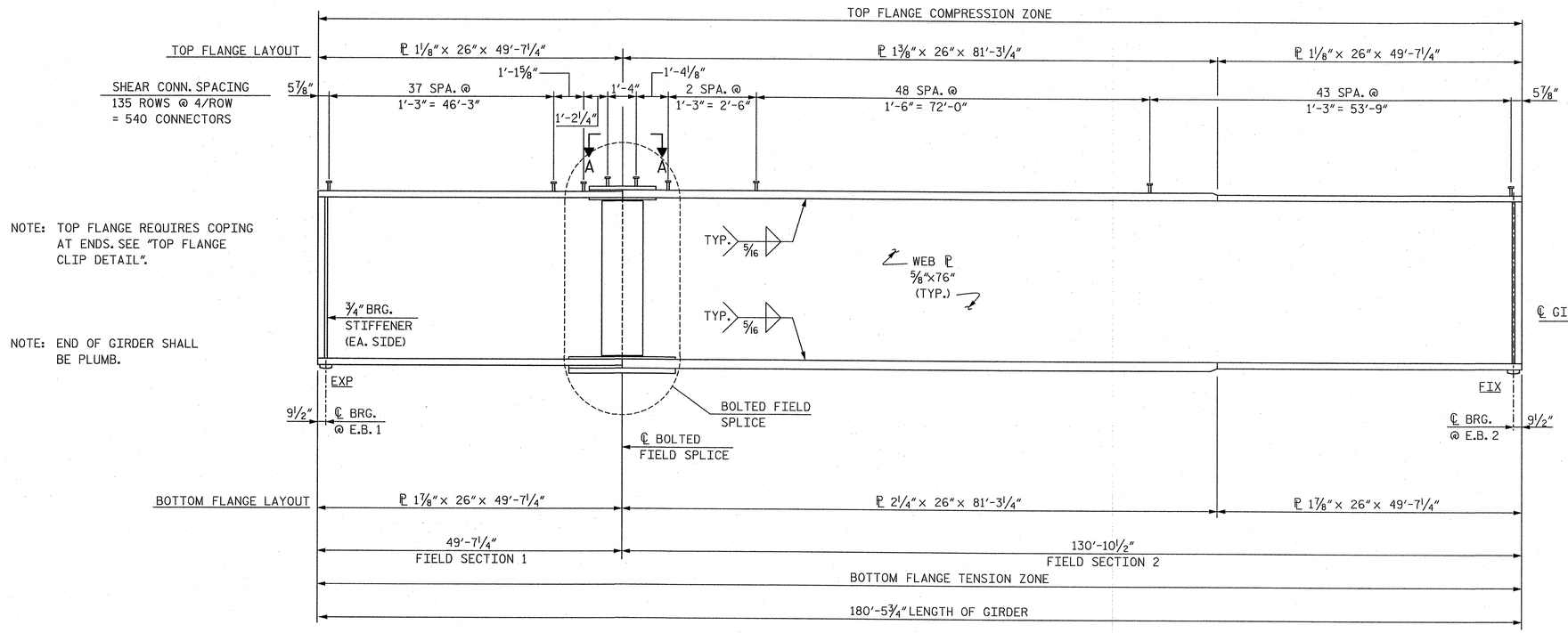

TYPICAL GIRDER ELEVATION

(INTERIOR GIRDER SHOWN, EXTERIOR GIRDER SIMILAR)
(INTERMEDIATE STIFFENERS & DIAPHRAGM CONNECTOR PLATES NOT SHOWN)

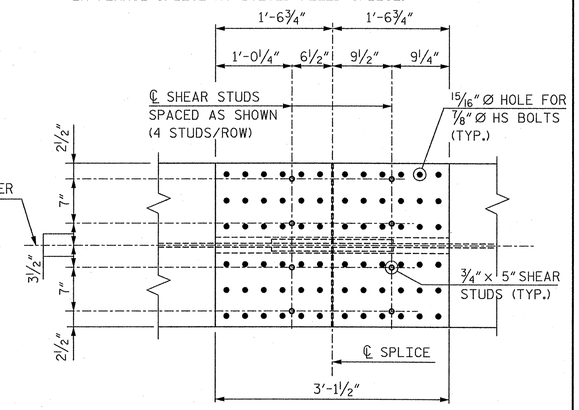

VIEW A-A

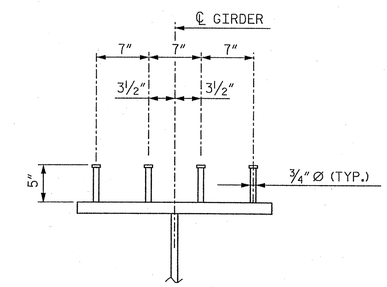

GIRDER - SHEAR CONNECTOR DETAIL

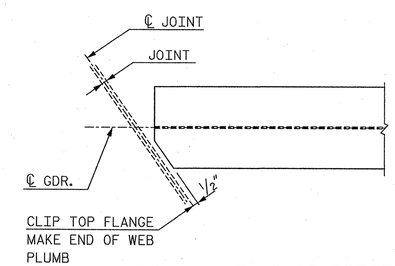

TOP FLANGE CLIP DETAIL

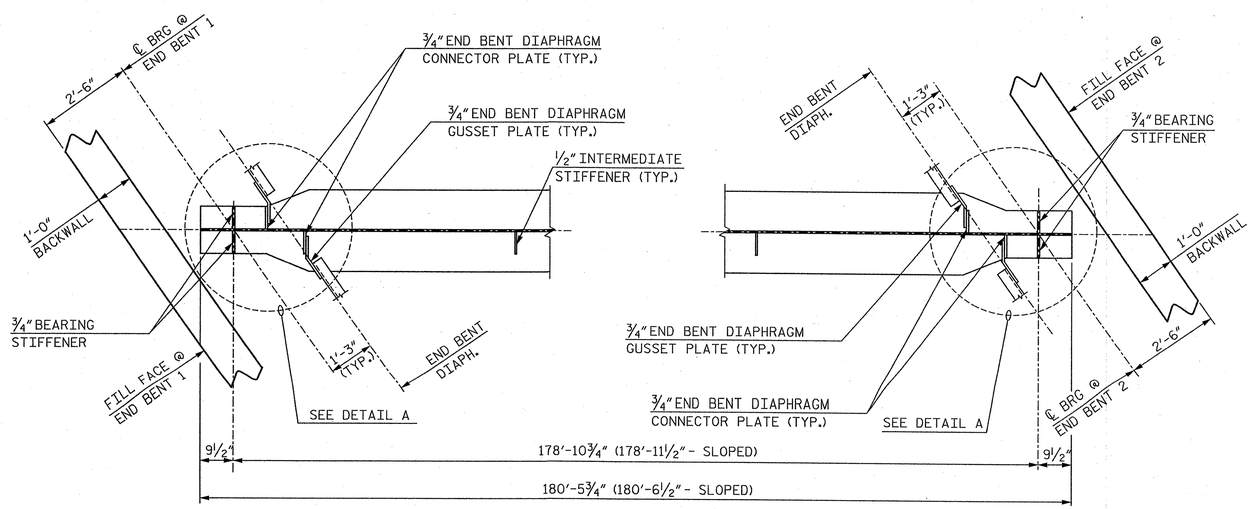

BOTTOM FLANGE GIRDER END DETAILS

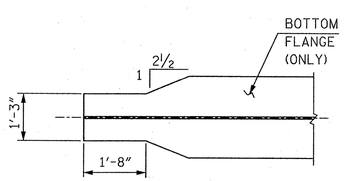

DETAIL A

PROJECT NO. R-2707B

CLEVELAND COUNTY

STATION: 252+73.29 -L-

STATE OF NORTH CAROLINA
DEPARTMENT OF TRANSPORTATION
RALEIGH

SUPERSTRUCTURE

GIRDER DETAILS

RIGHT LANE

HNTB NORTH CAROLINA, P.C.
NC License No. C-1554
343 E. Six Forks Rd., Suite 200, Raleigh, N.C. 27609

DRAWN BY J. BAYNE DATE 5/12
CHECKED BY P. BARBER DATE 5/12

DWG. NO. 9

REVISIONS						SHEET NO.
NO.	BY	DATE	NO.	BY	DATE	S-104
1			3			TOTAL SHEETS
2			4			266

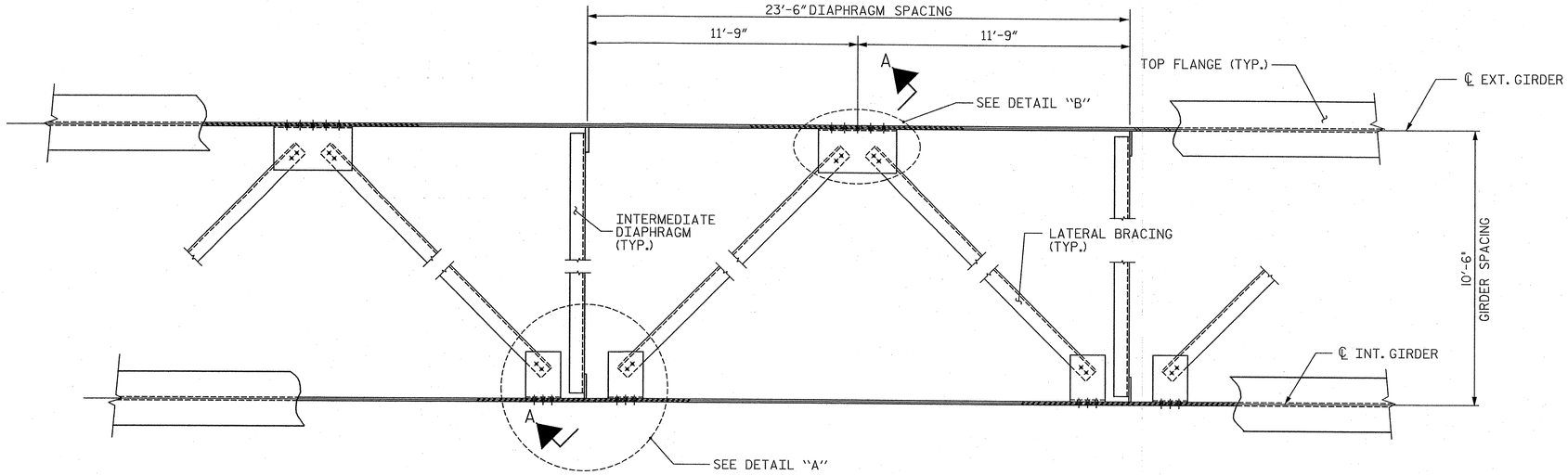

PART PLAN - TOP FLANGE LATERAL BRACING

(THROUGHOUT EXTERIOR BAYS ONLY)

NOTES

LATERAL BRACING ASSEMBLY SHALL COMPLY WITH SECTION 1072 OF THE STANDARD SPECIFICATIONS.

ALL STRUCTURAL STEEL SHALL BE AASHTO M270 GRADE 50W OR APPROVED EQUAL.

TENSION ON THE ASTM A325 BOLTS SHALL BE CALIBRATED USING DIRECT TENSION INDICATOR WASHERS IN ACCORDANCE WITH THE STANDARD SPECIFICATIONS.

ALL BOLTED CONNECTIONS SHALL BE 7/8" Ø HIGH STRENGTH BOLTS UNLESS OTHERWISE SPECIFIED.

THE CONTRACTOR HAS THE OPTION TO CLIP THE PROTRUDING CORNERS OF THE GUSSET PLATES, AT NO ADDITIONAL COST TO THE DEPARTMENT.

BENT GUSSET PLATES OR ROLLED ANGLE SHAPES MAY BE SUBSTITUTED FOR THE WELDED GUSSET PLATES DETAILED IF APPROVED BY THE ENGINEER, AT NO ADDITIONAL COST TO THE DEPARTMENT.

INSTALL THE LATERAL BRACING AFTER ERECTING THE EXTERIOR GIRDER AND THE ADJACENT INTERIOR GIRDER AND INSTALLING THE INTERMEDIATE DIAPHRAGMS.

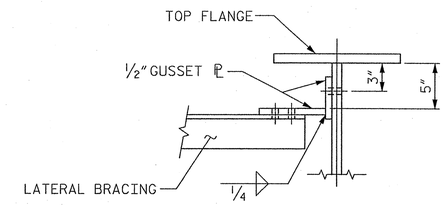

SECTION THRU CONNECTION

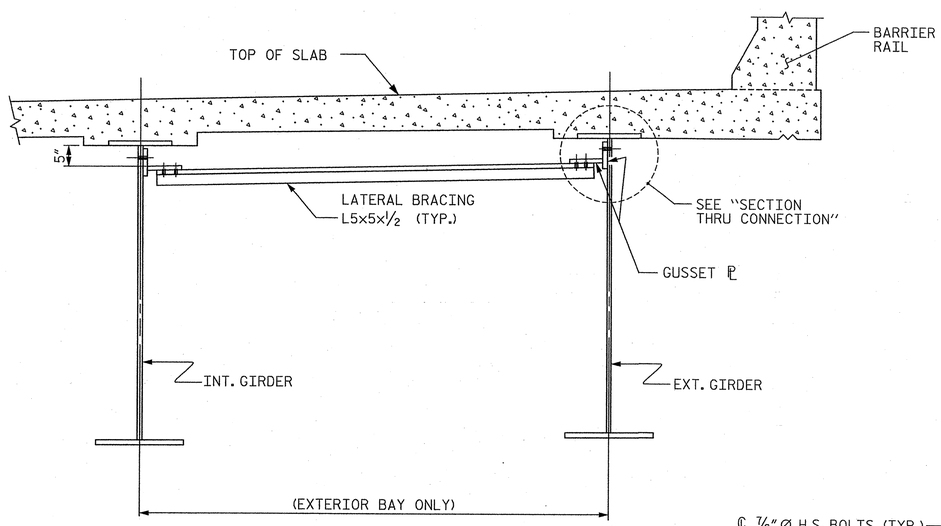

SECTION A-A

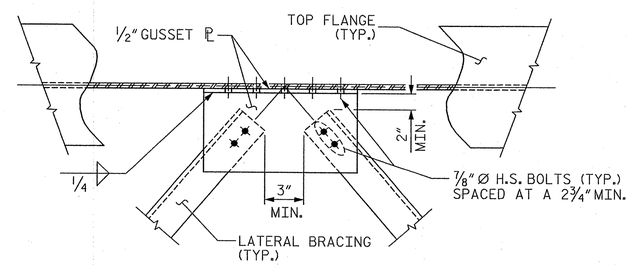

ENSURE BRACING PROJECTION LINES INTERSECT AT ℄ OF WEB

DETAIL "B"

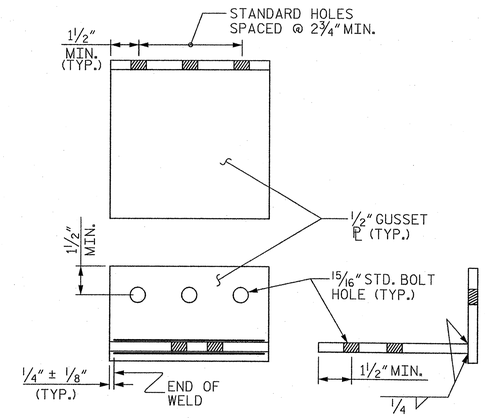

CONNECTION DETAIL

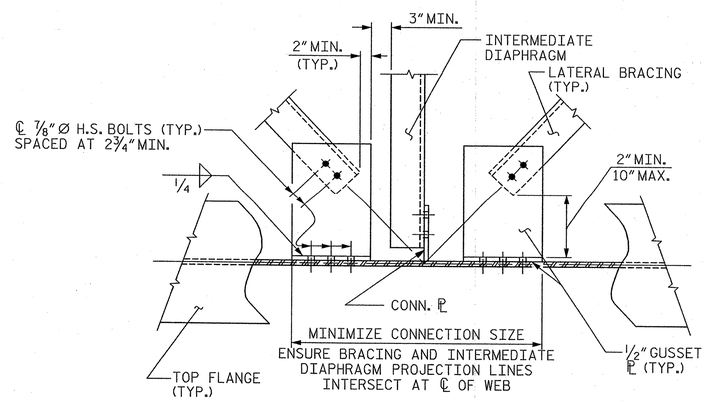

DETAIL "A"

PROJECT NO. R-2707B

CLEVELAND COUNTY

STATION: 252+73.29 -L-

STATE OF NORTH CAROLINA
DEPARTMENT OF TRANSPORTATION
RALEIGH

STANDARD

TOP FLANGE LATERAL BRACING

RIGHT LANE

NORTH CAROLINA PROFESSIONAL ENGINEER SEAL 12916 PAUL J. BARBER 6/26/12

ASSEMBLED BY: J. BAYNE		DATE: 5/12	
CHECKED BY : P. BARBER		DATE: 5/12	
DRAWN BY : WMC	6/11	ADDED: 10/31/11	
CHECKED BY : GM	6/11		

HNTB NORTH CAROLINA, P.C.
NC License No. C-1554
343 E. Six Forks Rd., Suite 200, Raleigh, N.C. 27609

DRAWN BY J. BAYNE DATE 5/12
CHECKED BY P. BARBER DATE 5/12

DWG. NO. 10

REVISIONS						
NO.	BY:	DATE:	NO.	BY:	DATE:	
1			3			
2			4			

SHEET NO. S-105

TOTAL SHEETS 266

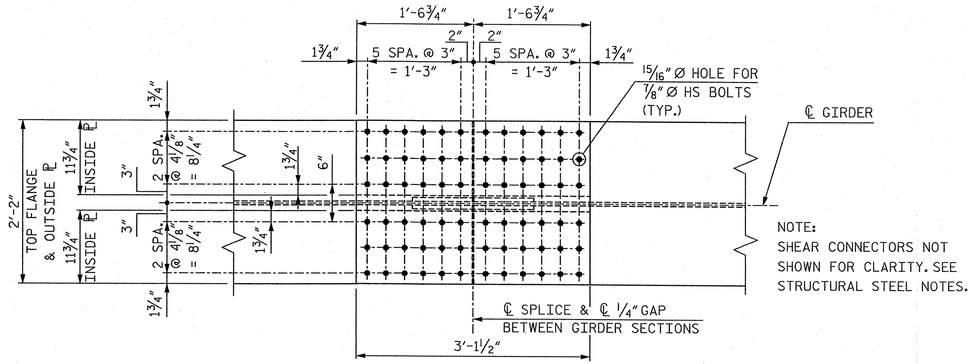

PLAN
(TOP OF TOP FLANGE)

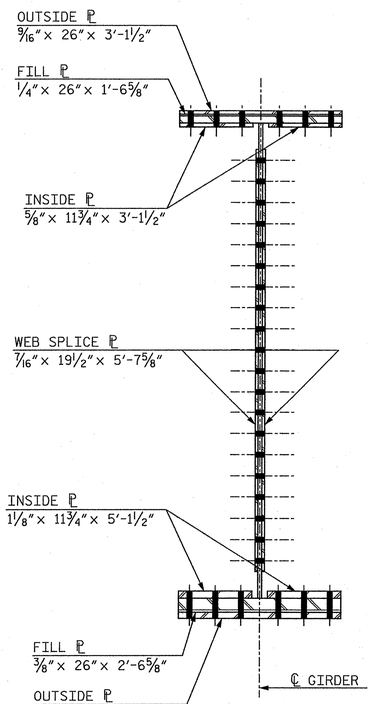

SECTION A-A

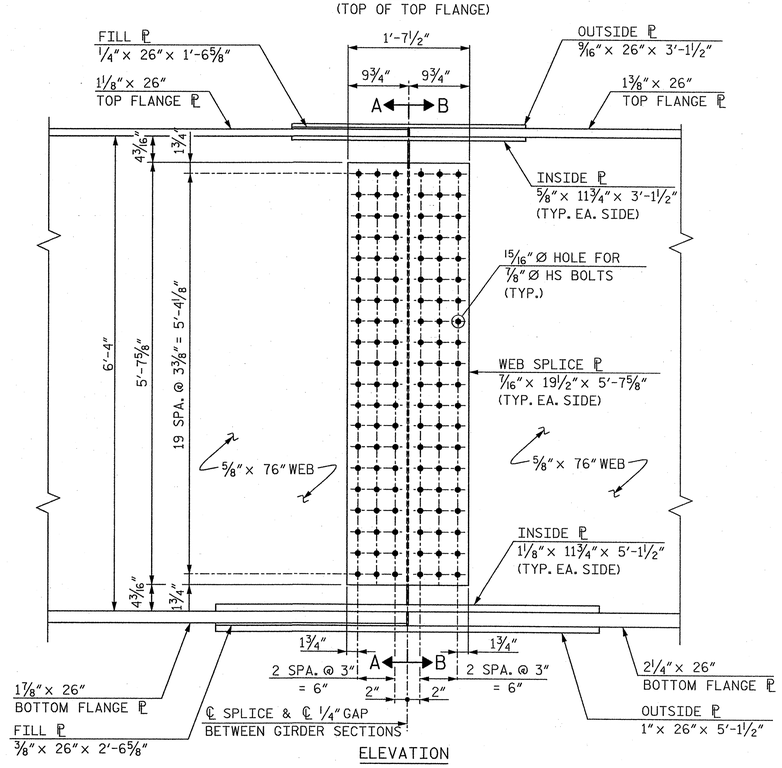

ELEVATION

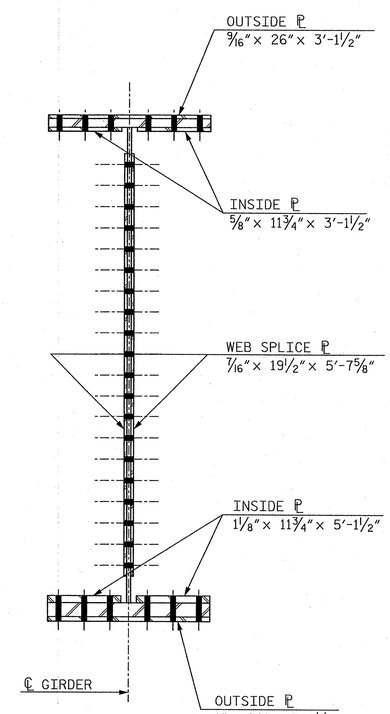

SECTION B-B

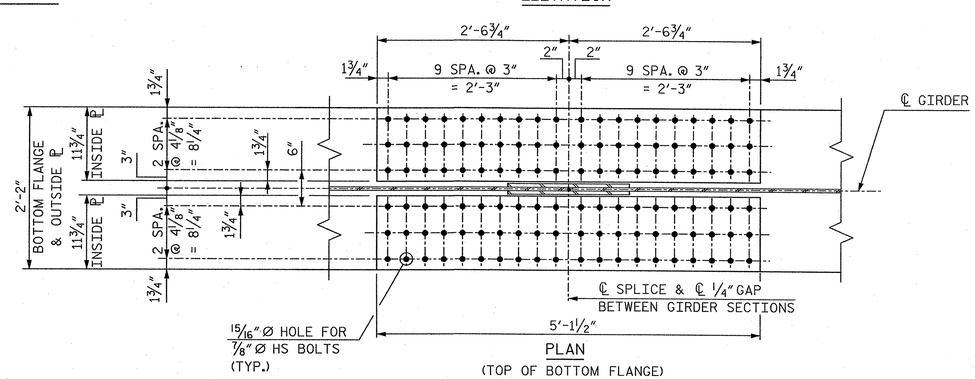

PLAN
(TOP OF BOTTOM FLANGE)

BOLTED FIELD SPLICE

STRUCTURAL STEEL NOTES

ALL STRUCTURAL STEEL SHALL BE AASHTO M270 GRADE 50W AND PAINTED IN ACCORDANCE WITH SYSTEM 4 OF ARTICLE 442-8 OF THE STANDARD SPECIFICATIONS UNLESS OTHERWISE NOTED ON THE PLANS.

ALL DIMENSIONS SHOWN ARE HORIZONTAL OR VERTICAL, UNLESS OTHERWISE NOTED.

ALL FIELD CONNECTIONS TO BE 7/8" DIA. HIGH STRENGTH BOLTS UNLESS OTHERWISE NOTED.

BEARING STIFFENERS ARE TO BE PLACED NORMAL TO THE WEB OF THE GIRDER AND SHALL BE PLUMB.

A CHARPY V-NOTCH TEST IS REQUIRED FOR WEB PLATES, BOTTOM FLANGE PLATES, BOTTOM FLANGE SPLICE PLATES AND WEB SPLICE PLATES (IF USED) FOR ALL GIRDERS AND IN ACCORDANCE WITH ARTICLE 1072-7 OF THE STANDARD SPECIFICATIONS.

ALL BEARING PLATES SHALL BE AASHTO M270 GRADE 50W.

PERMITTED FLANGE AND WEB SHOP SPLICES SHALL NOT BE LOCATED WITHIN 15 FEET OF MAXIMUM DEAD LOAD DEFLECTION (NOR WITHIN 15 FEET OF INTERMEDIATE BEARINGS OF CONTINUOUS UNITS). KEEP 2 FEET MINIMUM BETWEEN WEB AND FLANGE SHOP SPLICES. KEEP 6" MINIMUM BETWEEN CONNECTOR PLATE OR TRANSVERSE STIFFENER WELDS AND WEB OR FLANGE SHOP SPLICES.

STUDS ON GIRDERS MAY BE SHIFTED UP TO 1" IF NECESSARY TO CLEAR FLANGE SPLICE WELD.

WHEN FIELD WELDING THE SOLE PLATE TO THE GIRDER FLANGE, USE TEMPERATURE INDICATING WAX PENS, OR OTHER SUITABLE MEANS, TO ENSURE THAT THE TEMPERATURE OF THE SOLE PLATE DOES NOT EXCEED 300°F. TEMPERATURES ABOVE THIS MAY DAMAGE THE ELASTOMER.

ALL SURFACES OF BEARING PLATES SHALL BE SMOOTH AND STRAIGHT.

TENSION ON THE AASHTO M164 BOLTS SHALL BE CALIBRATED USING DIRECT TENSION INDICATOR WASHERS IN ACCORDANCE WITH ARTICLE 440-8 OF THE STANDARD SPECIFICATIONS.

END OF BEAMS AND GIRDERS SHALL BE PLUMB.

AT THE CONTRACTOR'S OPTION, THE DIAPHRAGM WITH THE WELDED GUSSET PLATES MAY BE USED IN LIEU OF THE DIAPHRAGM WITH BOLTED ANGLES AT NO ADDITIONAL COST TO THE DEPARTMENT.

FABRICATORS SHALL DETAIL DIAPHRAGM MEMBERS AND CONNECTIONS FOR FULL DEAD LOAD FIT UP. GIRDERS SHALL BE PLUMB AFTER THE FULL AMOUNT OF DEAD LOAD IS APPLIED.

STRUCTURAL STEEL ERECTION SHALL BE COMPLETE BEFORE FALSEWORK OR FORMS ARE PLACED ON THE UNIT.

PROJECT NO. R-2707B
CLEVELAND COUNTY
STATION: 252+73.29 -L-

NORTH CAROLINA PROFESSIONAL SEAL 12916 ENGINEER PAUL J. BARBER 12/28/12

STATE OF NORTH CAROLINA
DEPARTMENT OF TRANSPORTATION
RALEIGH

SUPERSTRUCTURE

FIELD SPLICE AND STRUCTURAL STEEL NOTES

RIGHT LANE

HNTB NORTH CAROLINA, P.C.
NC License No. C-1554
343 E. Six Forks Rd., Suite 200, Raleigh, N.C. 27609

DRAWN BY J. BAYNE DATE 5/12
CHECKED BY P. BARBER DATE 5/12
DWG. NO. II

REVISIONS						SHEET NO.
NO.	BY	DATE	NO.	BY	DATE	S-106
1			3			TOTAL SHEETS
2			4			266

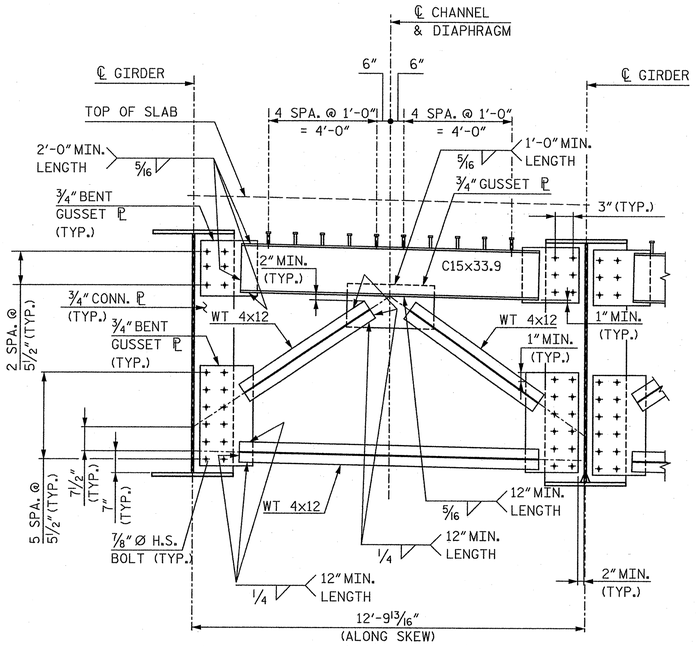

END BENT DIAPHRAGM (D1)

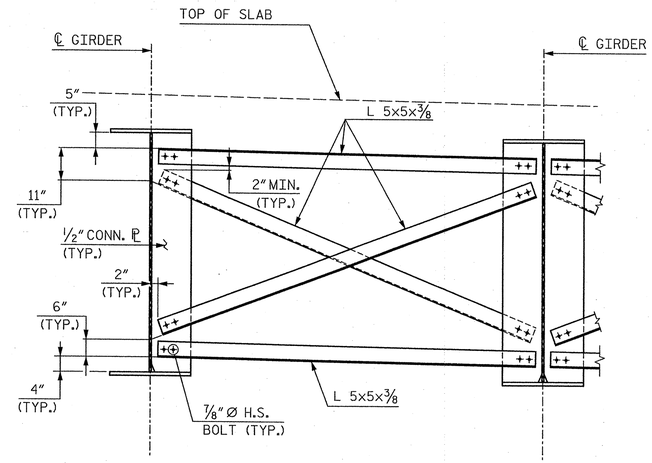

INTERMEDIATE DIAPHRAGM (D2)

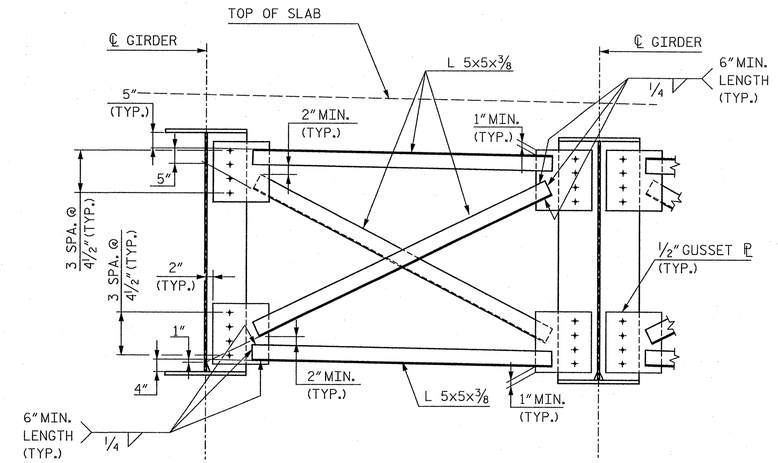

OPTIONAL INTERMEDIATE DIAPHRAGM (D2)

AT THE CONTRACTOR'S OPTION, THE DIAPHRAGM WITH THE WELDED GUSSET PLATES MAY BE USED IN LIEU OF THE DIAPHRAGM WITH THE BOLTED ANGLES AT NO ADDITIONAL COST TO THE DEPARTMENT.

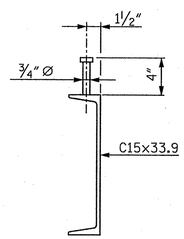

CHANNEL - SHEAR STUD DETAIL

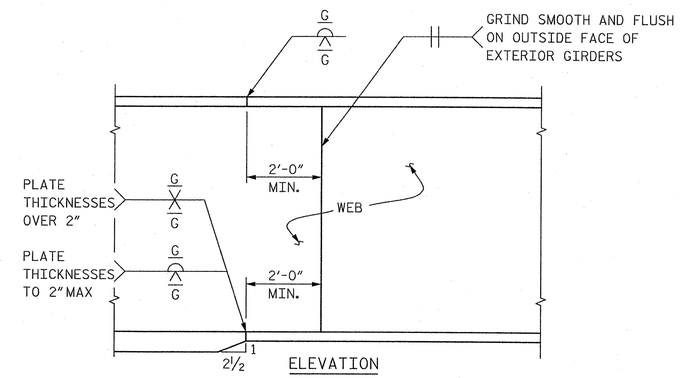

TYPICAL FLANGE AND WEB BUTT JOINT

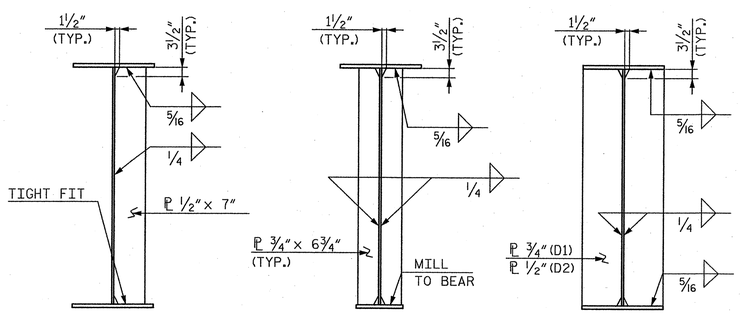

INTERMEDIATE STIFFENER

BEARING STIFFENER

CONNECTOR PLATE

STIFFENER & CONNECTOR ℙ DETAILS

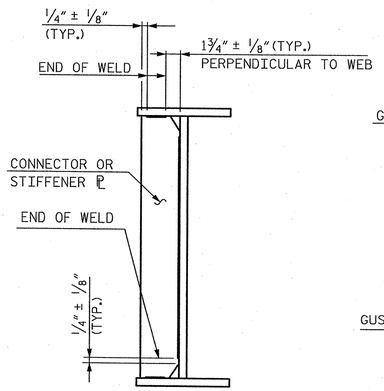

TYPICAL STIFFENER OR CONNECTOR PLATE CONNECTIONS

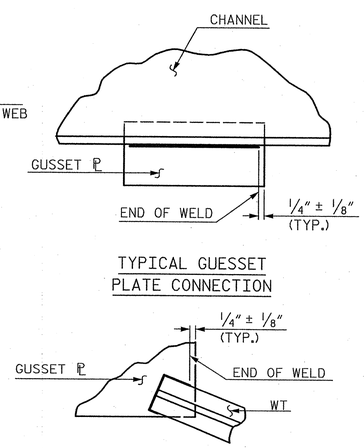

TYPICAL GUESSET PLATE CONNECTION

TYPICAL "TEE" TO GUSSET PLATE CONNECTION

WELD TERMINATION DETAILS

PROJECT NO. R-2707B

CLEVELAND COUNTY

STATION: 252+73.29 -L-

STATE OF NORTH CAROLINA
DEPARTMENT OF TRANSPORTATION
RALEIGH

SUPERSTRUCTURE

STRUCTURAL STEEL DETAILS

RIGHT LANE

NORTH CAROLINA PROFESSIONAL SEAL 12916 ENGINEER PAUL J. BARBER 5/28/12

HNTB

HNTB NORTH CAROLINA, P.C.
NC License No. C-1554
343 E. Six Forks Rd., Suite 200, Raleigh, N.C. 27609

DRAWN BY J. BAYNE DATE 5/12
CHECKED BY P. BARBER DATE 5/12

DWG. NO. 12

REVISIONS						
NO.	BY	DATE	NO.	BY	DATE	
1			3			
2			4			

SHEET NO. S-107

TOTAL SHEETS 266

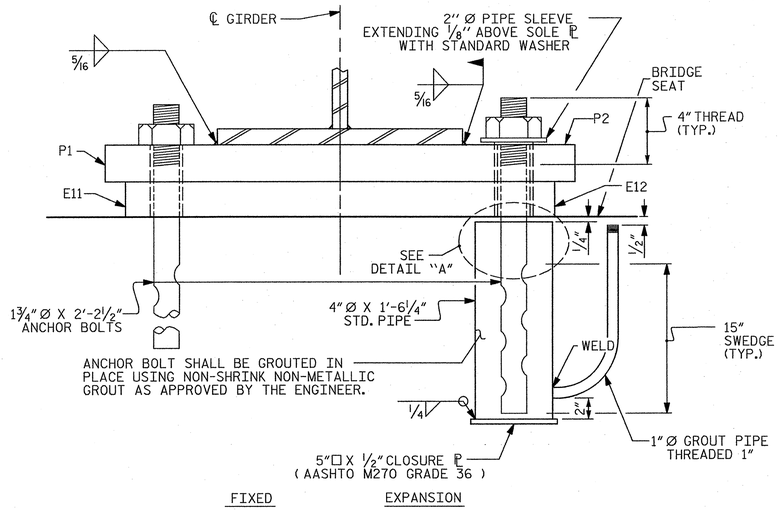

END VIEW

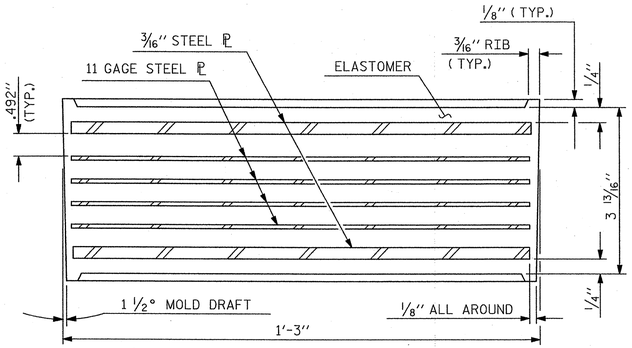

TYPICAL SECTION OF ELASTOMERIC BEARING

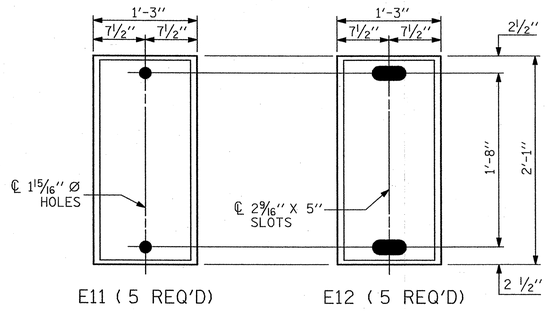

PLAN VIEW OF ELASTOMERIC BEARING

TYPE VI

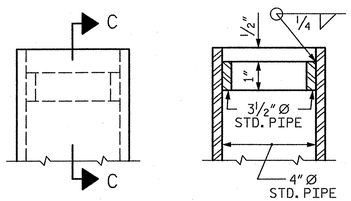

SECTION C-C

DETAIL "A"

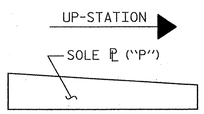

SOLE ℙ PLACEMENT DETAIL

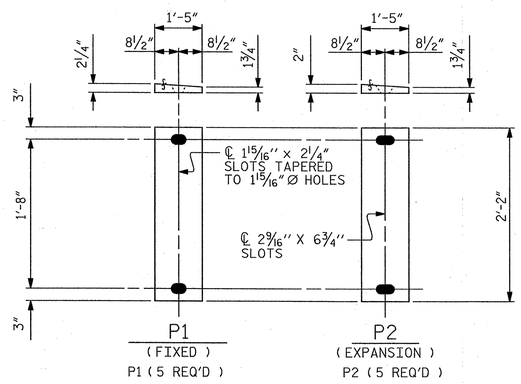

SOLE PLATE DETAILS ("P")

NOTES

AT ALL FIXED POINTS OF SUPPORT, NUTS FOR ANCHOR BOLTS ARE TO BE TIGHTENED FINGER TIGHT AND THEN BACKED OFF ½ TURN. THE THREAD OF THE NUT AND BOLT SHALL THEN BE BURRED WITH A SHARP POINTED TOOL.

THE 2" Ø PIPE SLEEVE SHALL BE CUT FROM SCHEDULE 40 PVC PLASTIC PIPE. THE PVC PLASTIC PIPE SHALL MEET THE REQUIREMENTS OF ASTM D1785.

THE PAYMENT FOR THE PIPE SLEEVES SHALL BE INCLUDED IN THE SEVERAL PAY ITEMS.

~~FOR PAINTED STRUCTURAL STEEL (EXCLUDING AASHTO M270 GRADE 50W), SOLE PLATES, ANCHOR BOLTS, NUTS AND WASHERS SHALL BE GALVANIZED IN ACCORDANCE WITH THE STANDARD SPECIFICATIONS.~~

FOR AASHTO M270 GRADE 50W STRUCTURAL STEEL, SOLE PLATE SHALL BE AASHTO M270 GRADE 50W AND SHALL NOT BE GALVANIZED. ANCHOR BOLTS, NUTS AND WASHERS SHALL BE GALVANIZED IN ACCORDANCE WITH THE STANDARD SPECIFICATIONS.

ANCHOR BOLTS SHALL MEET THE REQUIREMENTS OF ASTM A449. NUTS SHALL MEET THE REQUIREMENTS OF AASHTO M291-DH OR AASHTO M292-2H. WASHERS SHALL MEET THE REQUIREMENTS OF AASHTO M293. SHOP DRAWINGS ARE NOT REQUIRED FOR ANCHOR BOLTS, NUTS AND WASHERS. SHOP INSPECTION IS REQUIRED.

WHEN FIELD WELDING THE SOLE PLATE TO THE GIRDER FLANGE, USE TEMPERATURE INDICATING WAX PENS, OR OTHER SUITABLE MEANS, TO ENSURE THAT THE TEMPERATURE OF THE SOLE PLATE DOES NOT EXCEED 300°F. TEMPERATURES ABOVE THIS MAY DAMAGE THE ELASTOMER.

ALL SURFACES OF BEARING PLATES SHALL BE SMOOTH AND STRAIGHT.

THE CLOSURE PLATE, GROUT PIPE AND STANDARD PIPE FOR THE EXPANSION ASSEMBLY NEED NOT BE GALVANIZED.

THE CONTRACTOR'S ATTENTION IS CALLED TO THE FOLLOWING PROCEDURE, WHICH MAY BE REQUIRED BY THE ENGINEER, TO RESET ELASTOMERIC BEARINGS DUE TO GIRDER TRANSLATION AND END ROTATION:

1. ONCE THE DECK HAS CURED, THE GIRDERS SHALL BE JACKED AND THEN THE ANCHOR BOLTS, AND ELASTOMERIC BEARING SLOTS CENTERED AS NEARLY AS PRACTICAL ABOUT THE BEARING STIFFENER. THIS OPERATION SHALL BE PERFORMED AT APPROXIMATELY 60° F.
2. AFTER CENTERING THE ELASTOMERIC BEARING SLOTS AND ANCHOR BOLTS, THE ANCHOR BOLTS SHALL BE GROUTED.

   THE CONTRACTOR MAY PROPOSE ALTERNATE METHODS, PROVIDED DETAILS ARE SUBMITTED TO THE ENGINEER FOR REVIEW AND APPROVAL.

—LOAD RATINGS—	
	MAX.D.L.+ L.L.
TYPE VI	262 k

PROJECT NO. R-2707B

CLEVELAND COUNTY

STATION: 252+73.29 -L-

STATE OF NORTH CAROLINA
DEPARTMENT OF TRANSPORTATION
RALEIGH

STANDARD

ELASTOMERIC BEARING DETAILS

(STEEL SUPERSTRUCTURE)

RIGHT LANE

NORTH CAROLINA PROFESSIONAL SEAL 12916 ENGINEER PAUL J. BARBER 2/24/12

ASSEMBLED BY : J. BAYNE		DATE : 5/12	
CHECKED BY :		DATE :	
DRAWN BY : EEM 10/95	REV. 7/10/01	LES/RDR	
CHECKED BY : PEK 10/95	REV. 5/1/06	TLA/GM	
	REV. 10/1/11	MAA/GM	

HNTB

HNTB NORTH CAROLINA, P.C.
NC License No. C-0554
343 E. Six Forks Rd., Suite 200, Raleigh, N.C. 27609

DRAWN BY J. BAYNE DATE 5/12
CHECKED BY P. BARBER DATE 5/12

DWG. NO. 13

REVISIONS						
NO.	BY:	DATE:	NO.	BY:	DATE:	
1			3			
2			4			

SHEET NO. S-108

TOTAL SHEETS 266

STD NO. EB2

DEAD LOAD DEFLECTION AND CAMBER TABLE FOR GIRDERS 1 & 5

	SPAN A																					
	GIRDERS 1 & 5																					
TWENTIETH POINTS	0	.05	.10	.15	.20	.25	FS	.30	.35	.40	.45	.50	.55	.60	.65	.70	.75	.80	.85	.90	.95	1.00
DEFLECTION DUE TO WEIGHT OF STEEL ↓	0.000	0.038	0.075	0.110	0.142	0.169	0.182	0.192	0.211	0.224	0.232	0.235	0.232	0.224	0.211	0.192	0.169	0.142	0.110	0.075	0.038	0.000
DEFLECTION DUE TO WEIGHT OF SLAB * ↓	0.000	0.089	0.175	0.255	0.328	0.391	0.420	0.444	0.486	0.516	0.535	0.541	0.535	0.516	0.486	0.444	0.391	0.328	0.255	0.175	0.089	0.000
DEFLECTION DUE TO WEIGHT OF RAIL ↓	0.000	0.009	0.018	0.027	0.034	0.041	0.044	0.047	0.051	0.054	0.056	0.057	0.056	0.054	0.051	0.047	0.041	0.034	0.027	0.018	0.009	0.000
TOTAL DEAD LOAD DEFLECTION ↓	0.000	0.136	0.268	0.392	0.504	0.601	0.646	0.683	0.748	0.794	0.823	0.833	0.823	0.794	0.748	0.683	0.601	0.504	0.392	0.268	0.136	0.000
VERTICAL CURVE ORDINATE FOR CAMBER ↑	0.000	0.025	0.047	0.067	0.084	0.098	0.104	0.110	0.119	0.125	0.129	0.131	0.129	0.125	0.119	0.110	0.098	0.084	0.067	0.047	0.025	0.000
REQUIRED CAMBER ↑	0	1 15/16	3 3/4	5 1/2	7 1/16	8 3/8	9	9 1/2	10 3/8	11	11 7/16	11 9/16	11 7/16	11	10 3/8	9 1/2	8 3/8	7 1/16	5 1/2	3 3/4	1 15/16	0

DEAD LOAD DEFLECTION AND CAMBER TABLE FOR GIRDERS 2 & 4

	SPAN A																					
	GIRDERS 2 & 4																					
TWENTIETH POINTS	0	.05	.10	.15	.20	.25	FS	.30	.35	.40	.45	.50	.55	.60	.65	.70	.75	.80	.85	.90	.95	1.00
DEFLECTION DUE TO WEIGHT OF STEEL ↓	0.000	0.038	0.075	0.110	0.142	0.169	0.182	0.192	0.211	0.224	0.232	0.235	0.232	0.224	0.211	0.192	0.169	0.142	0.110	0.075	0.038	0.000
DEFLECTION DUE TO WEIGHT OF SLAB * ↓	0.000	0.089	0.174	0.254	0.327	0.390	0.418	0.442	0.484	0.514	0.532	0.539	0.532	0.514	0.484	0.442	0.390	0.327	0.254	0.174	0.089	0.000
DEFLECTION DUE TO WEIGHT OF RAIL ↓	0.000	0.009	0.018	0.027	0.034	0.041	0.044	0.047	0.051	0.054	0.056	0.057	0.056	0.054	0.051	0.047	0.041	0.034	0.027	0.018	0.009	0.000
TOTAL DEAD LOAD DEFLECTION ↓	0.000	0.136	0.267	0.391	0.503	0.600	0.644	0.681	0.746	0.792	0.820	0.831	0.820	0.792	0.746	0.681	0.600	0.503	0.391	0.267	0.136	0.000
VERTICAL CURVE ORDINATE FOR CAMBER ↑	0.000	0.025	0.047	0.067	0.084	0.098	0.104	0.110	0.119	0.125	0.129	0.131	0.129	0.125	0.119	0.110	0.098	0.084	0.067	0.047	0.025	0.000
REQUIRED CAMBER ↑	0	1 15/16	3 3/4	5 1/2	7 1/16	8 3/8	9	9 1/2	10 3/8	11	11 3/8	11 9/16	11 3/8	11	10 3/8	9 1/2	8 3/8	7 1/16	5 1/2	3 3/4	1 15/16	0

DEAD LOAD DEFLECTION AND CAMBER TABLE FOR GIRDER 3

	SPAN A																					
	GIRDER 3																					
TWENTIETH POINTS	0	.05	.10	.15	.20	.25	FS	.30	.35	.40	.45	.50	.55	.60	.65	.70	.75	.80	.85	.90	.95	1.00
DEFLECTION DUE TO WEIGHT OF STEEL ↓	0.000	0.038	0.075	0.11	0.142	0.169	0.182	0.192	0.211	0.224	0.232	0.235	0.232	0.224	0.211	0.192	0.169	0.142	0.110	0.075	0.038	0.000
DEFLECTION DUE TO WEIGHT OF SLAB * ↓	0.000	0.089	0.174	0.253	0.326	0.388	0.417	0.440	0.482	0.512	0.530	0.536	0.530	0.512	0.482	0.440	0.388	0.326	0.253	0.174	0.089	0.000
DEFLECTION DUE TO WEIGHT OF RAIL ↓	0.000	0.009	0.018	0.027	0.034	0.041	0.044	0.047	0.051	0.054	0.056	0.057	0.056	0.054	0.051	0.047	0.041	0.034	0.027	0.018	0.009	0.000
TOTAL DEAD LOAD DEFLECTION ↓	0.000	0.136	0.267	0.390	0.502	0.598	0.643	0.679	0.744	0.790	0.818	0.828	0.818	0.790	0.744	0.679	0.598	0.502	0.390	0.267	0.136	0.000
VERTICAL CURVE ORDINATE FOR CAMBER ↑	0.000	0.025	0.047	0.067	0.084	0.098	0.104	0.110	0.119	0.125	0.129	0.131	0.129	0.125	0.119	0.110	0.098	0.084	0.067	0.047	0.025	0.000
REQUIRED CAMBER ↑	0	1 15/16	3 3/4	5 1/2	7 1/16	8 3/8	8 15/16	9 7/16	10 3/8	11	11 3/8	11 1/2	11 3/8	11	10 3/8	9 7/16	8 3/8	7 1/16	5 1/2	3 3/4	1 15/16	0

* INCLUDES SLAB, BUILDUPS & STAY-IN-PLACE FORMS.

ALL VALUES ARE SHOWN IN FEET (DECIMAL FORM), EXCEPT " REQUIRED CAMBER ", WHICH IS GIVEN IN INCHES (FRACTION FORM).

FS DENOTES FIELD SPLICE LOCATION

TWENTIETH POINTS ARE TAKEN FROM ℄ BEARING TO ℄ BEARING.

SLOPE FOR THE ZERO CAMBER BASELINE VARIES

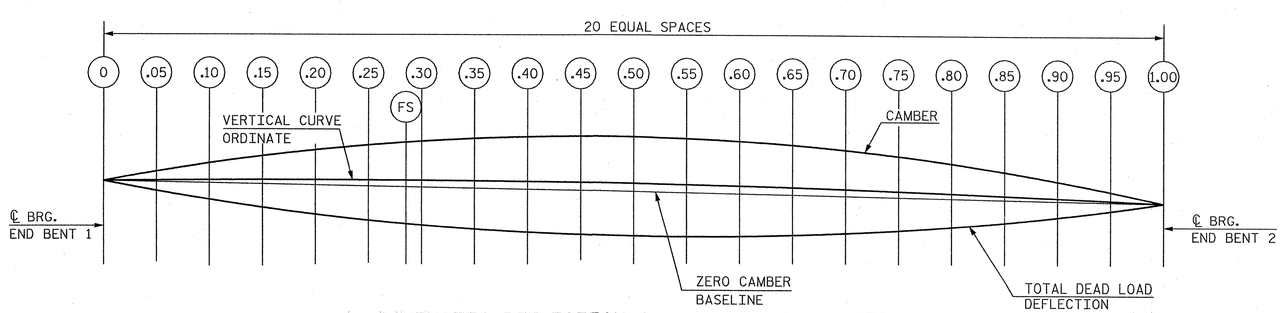

SCHEMATIC DEFLECTION AND CAMBER ORDINATES

PROJECT NO. R-2707B

CLEVELAND COUNTY

STATION: 252+73.29 -L-

NORTH CAROLINA PROFESSIONAL SEAL 12916 ENGINEER PAUL J. BARBER 8/16/12

STATE OF NORTH CAROLINA
DEPARTMENT OF TRANSPORTATION
RALEIGH

SUPERSTRUCTURE

DEAD LOAD DEFLECTIONS AND CAMBER TABLES

RIGHT LANE

HNTB NORTH CAROLINA, P.C.
NC License No. C-1554
343 E. Six Forks Rd., Suite 200, Raleigh, N.C. 27609

DRAWN BY J. BAYNE DATE 6/12
CHECKED BY P. BARBER DATE 6/12
DWG. NO. 14

REVISIONS						SHEET NO.
NO.	BY	DATE	NO.	BY	DATE	S-169
1			3			TOTAL SHEETS
2			4			266

NOTES

THE BARRIER RAIL IN EACH SPAN SHALL NOT BE CAST UNTIL ALL SLAB CONCRETE IN THAT SPAN HAS BEEN CAST AND HAS REACHED A MINIMUM COMPRESSIVE STRENGTH OF 3,000 PSI.

~~WHEN EVAZOTE JOINT SEAL IS REQUIRED, THE JOINT IN THE DECK SHALL BE SAWED PRIOR TO THE CASTING OF BARRIER RAIL.~~

ALL REINFORCING STEEL IN BARRIER RAILS SHALL BE EPOXY COATED.

~~THE #5 S3 AND #5 S4 BARS SHALL BE INSTALLED, USING AN ADHESIVE ANCHORING SYSTEM, AFTER SAWING THE JOINT. THE YIELD LOAD FOR THE #5 S3 AND #5 S4 BARS IS 18.6 KIPS. FIELD TESTING FOR THE ADHESIVE BONDING SYSTEM IS NOT REQUIRED.~~

GROOVED CONTRACTION JOINTS, 1/2" IN DEPTH, SHALL BE TOOLED IN ALL EXPOSED FACES OF THE BARRIER RAIL AND IN ACCORDANCE WITH ARTICLE 825-10(B) OF THE STANDARD SPECIFICATIONS. THE CONTRACTION JOINT SHALL BE LOCATED AT EACH THIRD POINT BETWEEN BARRIER RAIL EXPANSION JOINTS. ONLY ONE CONTRACTION JOINT IS REQUIRED AT MIDPOINT OF BARRIER RAIL SEGMENTS LESS THAN 20 FEET IN LENGTH AND NO CONTRACTION JOINTS ARE REQUIRED FOR THOSE SEGMENTS LESS THAN 10 FEET IN LENGTH.

BAR TYPES

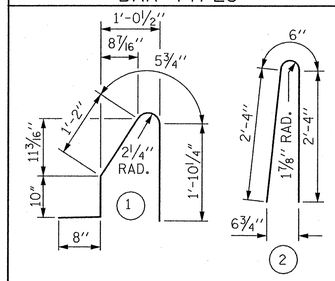

ALL BAR DIMENSIONS ARE OUT TO OUT

BILL OF MATERIAL

FOR CONCRETE BARRIER RAIL ONLY

BAR	NO.	SIZE	TYPE	LENGTH	WEIGHT
* B1	96	5	STR.	25'-5"	2,545
* B2	16	5	STR.	26'-1"	435
* S1	362	5	1	5'-0"	1,888
* S2	362	5	2	5'-2"	1,951

* EPOXY COATED REINFORCING STEEL	6,819	LBS.
CLASS AA CONCRETE	36.5	CU. YDS.
CONCRETE BARRIER RAIL	364.6	LIN. FT.

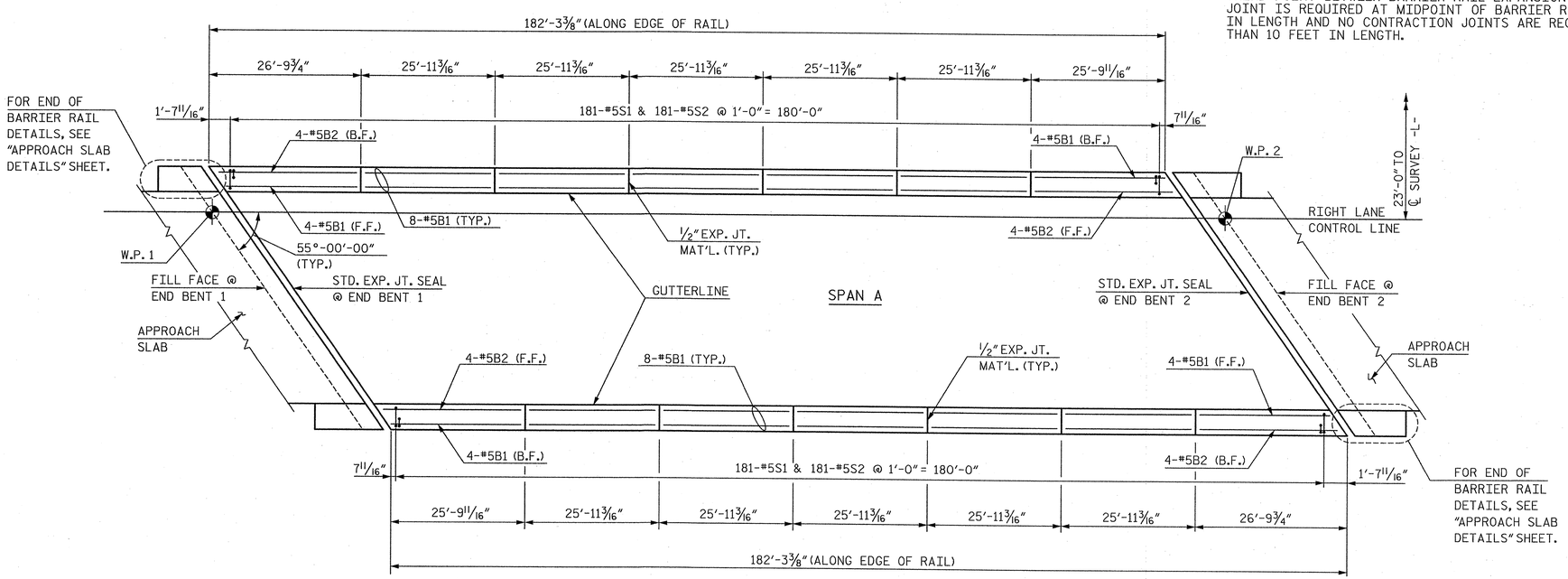

PLAN OF BARRIER RAIL

NOTE: EDGE OF SLAB NOT SHOWN FOR CLARITY.

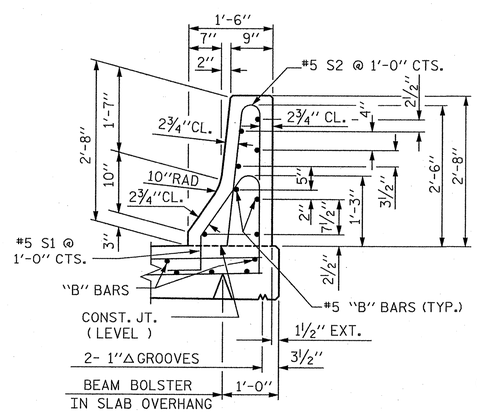

SECTION THRU RAIL

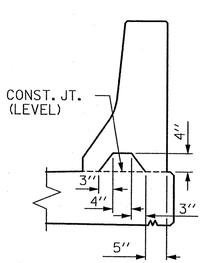

SECTION S-S

AT DAM IN OPEN JOINT (THIS IS TO BE USED ONLY WHEN SLIP FORM IS USED)

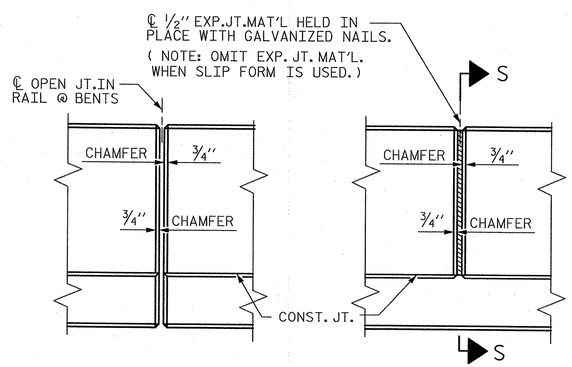

ELEVATION AT EXPANSION JOINTS

BARRIER RAIL DETAILS

PROJECT NO. R-2707B

CLEVELAND COUNTY

STATION: 252+73.29 -L-

STATE OF NORTH CAROLINA
DEPARTMENT OF TRANSPORTATION
RALEIGH

STANDARD

CONCRETE BARRIER RAIL

RIGHT LANE

ASSEMBLED BY : M. WRIGHT	DATE : 4/12		
CHECKED BY : P. BARBER	DATE : 5/12		
DRAWN BY : ARB 5/87	REV. 5/7/03R	RWW/JTE	
CHECKED BY : SJD 9/87	REV. 5/1/06R	TLA/GM	
	REV. 10/1/11	MAA/GM	

HNTB NORTH CAROLINA, P.C.
NC License No. C-1554
343 E. Six Forks Rd., Suite 200, Raleigh, N.C. 27609

DRAWN BY M. WRIGHT DATE 4/12
CHECKED BY P. BARBER DATE 5/12

DWG. NO. 15

REVISIONS

NO.	BY	DATE	NO.	BY	DATE
1			3		
2			4		

SHEET NO. S-110

TOTAL SHEETS 266

STD. NO. CBR1

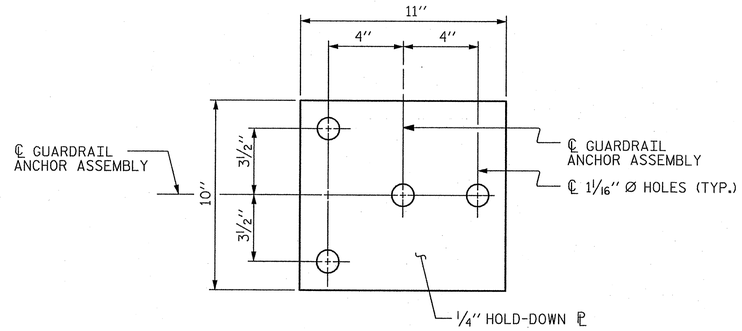

PLAN

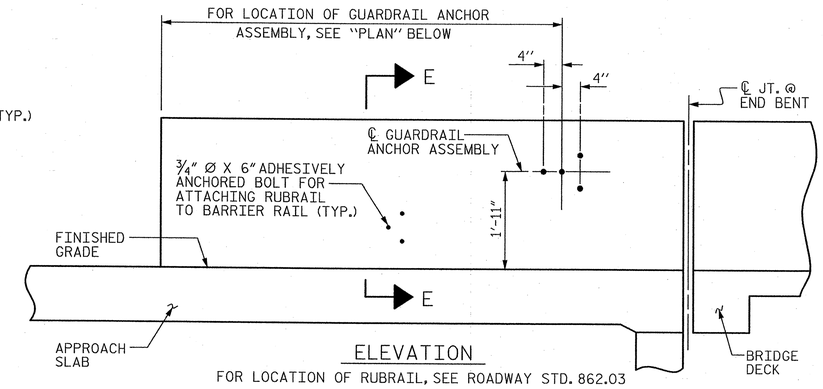

ELEVATION

FOR LOCATION OF RUBRAIL, SEE ROADWAY STD. 862.03

NOTES

THE GUARDRAIL ANCHOR ASSEMBLY SHALL CONSIST OF A 1/4" HOLD-DOWN PLATE AND 4 - 7/8" Ø BOLTS WITH NUTS AND WASHERS, RUBRAIL, AND ADHESIVELY ANCHORED BOLTS.

THE HOLD-DOWN PLATE SHALL CONFORM TO AASHTO M270 GRADE 36. AFTER FABRICATION, THE HOLD-DOWN PLATE SHALL BE HOT-DIP GALVANIZED IN ACCORDANCE WITH AASHTO M111.

BOLTS SHALL CONFORM TO THE REQUIREMENTS OF ASTM A307 AND NUTS SHALL CONFORM TO THE REQUIREMENTS OF AASHTO M291. BOLTS, NUTS AND WASHERS SHALL BE GALVANIZED. (AT THE CONTRACTOR'S OPTION, STAINLESS STEEL BOLTS, NUTS AND WASHERS MAY BE USED AS AN ALTERNATE FOR THE 7/8" Ø GALVANIZED BOLTS, NUTS AND WASHERS. THEY SHALL CONFORM TO OR EXCEED THE MECHANICAL REQUIREMENTS OF ASTM A307. THE USE OF THIS ALTERNATE SHALL BE APPROVED BY THE ENGINEER.)

THE GUARDRAIL ANCHOR ASSEMBLY IS REQUIRED AT ALL POINTS WHERE APPROACH GUARDRAIL IS TO BE ATTACHED TO THE END OF BARRIER RAIL. FOR POINTS OF ATTACHMENT, SEE SKETCH.

AFTER INSTALLATION, THE EXPOSED THREAD OF THE BOLT SHALL BE BURRED WITH A SHARP POINTED TOOL.

THE COST OF THE GUARDRAIL ANCHOR ASSEMBLY SHALL BE INCLUDED IN THE UNIT CONTRACT PRICE BID FOR CONCRETE BARRIER RAIL.

THE 1 1/4" Ø HOLES SHALL BE FORMED OR DRILLED WITH A CORE BIT. IMPACT TOOLS WILL NOT BE PERMITTED. ANY CONCRETE DAMAGED BY THIS WORK SHALL BE REPAIRED TO THE SATISFACTION OF THE ENGINEER.

THE C6 X 8.2 RUBRAIL IS TO BE ADHESIVELY ANCHORED TO THE RAIL USING THREE 3/4" Ø X 6" BOLTS WITH WASHERS. LEVEL ONE FIELD TESTING IS REQUIRED, AND THE YIELD LOAD OF THE 3/4" Ø BOLT IS 12 KIPS. FOR ADHESIVELY ANCHORED ANCHOR BOLTS OR DOWELS, SEE STANDARD SPECIFICATIONS. SEE ROADWAY STANDARD 862.03 FOR DETAILS AND LOCATION OF THE RUBRAIL.

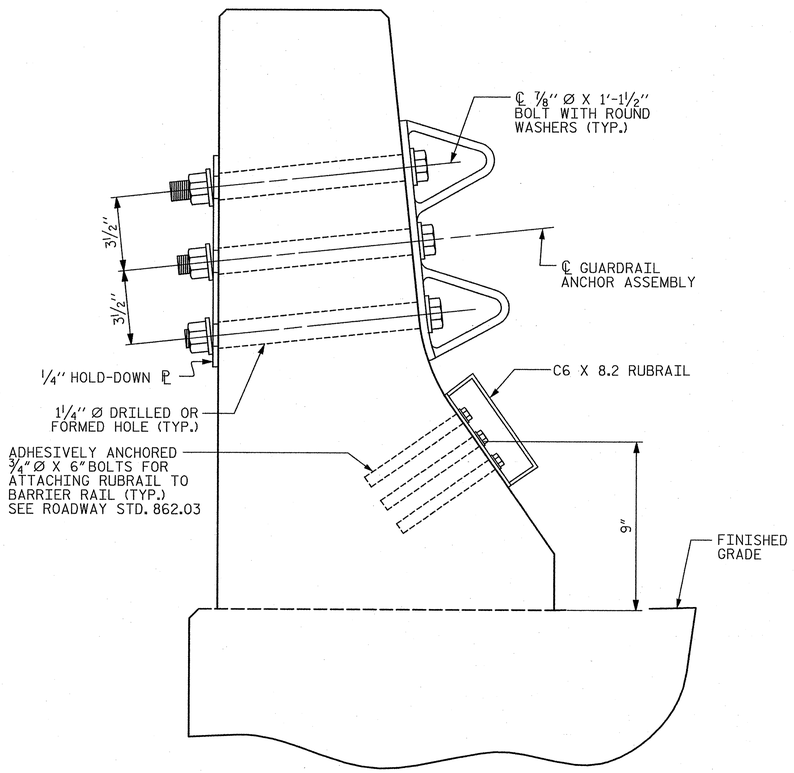

SECTION E-E

GUARDRAIL ANCHOR ASSEMBLY DETAILS

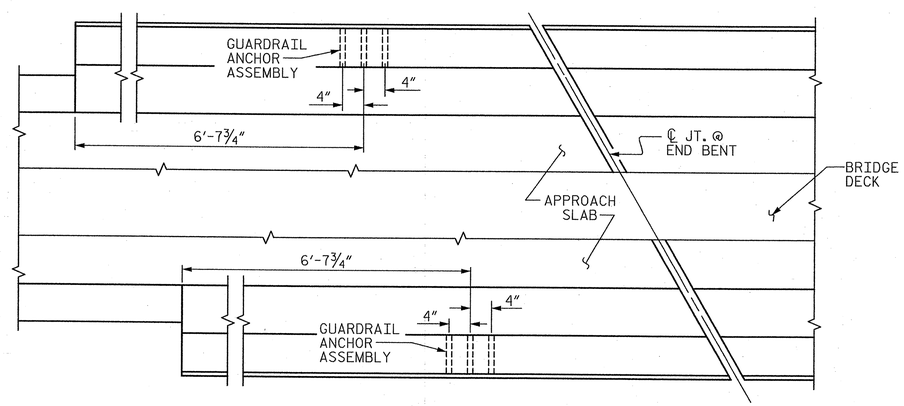

PLAN

LOCATION OF ANCHORS FOR GUARDRAIL

END BENT #1 SHOWN, END BENT #2 SIMILAR.

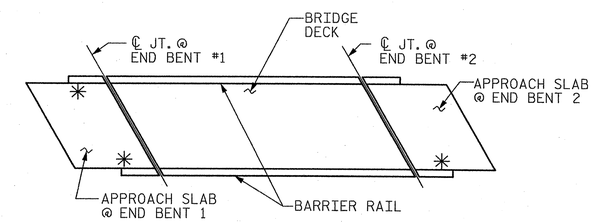

SKETCH SHOWING POINTS OF ATTACHMENTS

✳ DENOTES GUARDRAIL ANCHOR ASSEMBLY (3 REQ'D)

PROJECT NO. R-2707B

CLEVELAND COUNTY

STATION: 252+73.29 -L-

NORTH CAROLINA PROFESSIONAL SEAL 12916 ENGINEER PAUL J. BARBER 8/28/12

STATE OF NORTH CAROLINA
DEPARTMENT OF TRANSPORTATION
RALEIGH

STANDARD

GUARDRAIL ANCHORAGE FOR BARRIER RAIL

RIGHT LANE

ASSEMBLED BY : M. WRIGHT	DATE : 4/12
CHECKED BY : P. BARBER	DATE : 5/12
DRAWN BY : TLA 5/06	ADDED 5/1/06RR KMM/GM
CHECKED BY : GM 5/06	REV. 10/1/11 MAA/GM

HNTB NORTH CAROLINA, P.C.
NC License No. C-1554
343 E. Six Forks Rd., Suite 200, Raleigh, N.C. 27609

DRAWN BY M. WRIGHT DATE 4/12
CHECKED BY P. BARBER DATE 5/12

DWG. NO. 16

REVISIONS						SHEET NO.
NO.	BY	DATE	NO.	BY	DATE	S-111
1			3			TOTAL SHEETS
2			4			266

STD. NO. CRA2

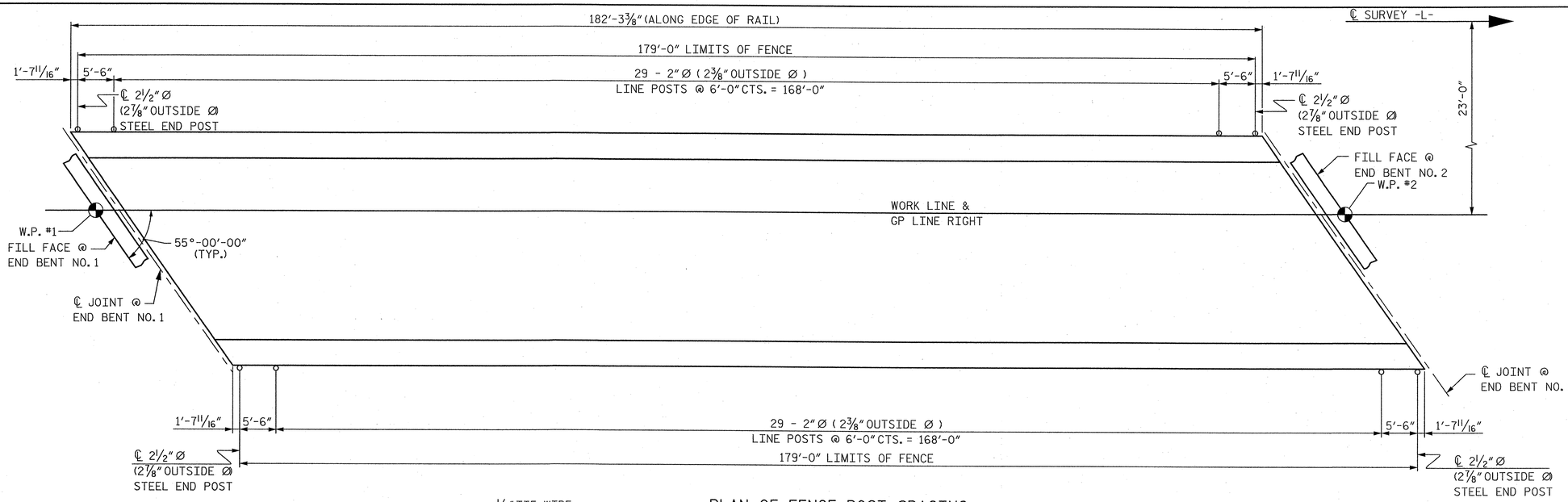

PLAN OF FENCE POST SPACING

(PAY LENGTH 358.00 FEET)

NOTES:

FOR 72" CHAIN LINK FENCE, SEE SPECIAL PROVISIONS.

MATERIAL FOR ANCHOR BOLTS SHALL BE TYPE 304 STAINLESS STEEL WITH A MINIMUM 9000 PSI ULTIMATE STRENGTH. NUTS AND WASHERS SHALL BE TYPE 304 STAINLESS STEEL. ANCHOR BOLTS SHALL BE EMBEDDED AS PER ADHESIVE BONDING SYSTEM MANUFACTURER SPECIFICATIONS. NUTS SHALL BE AMERICAN STANDARD FINISHED HEXAGON THICK NUTS, CLASS 2B THREADS.

FOR SETTING ANCHOR BOLTS, THE CONTRACTOR SHALL USE AN ADHESIVE BONDING SYSTEM. SEE SPECIAL PROVISIONS FOR ADHESIVELY ANCHORED ANCHOR BOLTS OR DOWELS. LEVEL ONE FIELD TESTING OF BONDING SYSTEM IS REQUIRED AND THE YIELD LOAD OF THE 3/4" Ø BOLTS IS 12.0 KIPS.

ALL FENCE MATERIAL SHALL MEET THE REQUIREMENTS OF SECTION 1050 OF THE STANDARD SPECIFICATIONS, GALVANIZE ALL STEEL PARTS AND HARDWARE IN ACCORDANCE WITH ARTICLE 1076 OF THE STANDARD SPECIFICATIONS.

FENCE POST LOCATIONS SHALL BE SHIFTED, AS NECESSARY, TO MAINTAIN 12" MINIMUM DISTANCE FROM ANCHOR BOLT TO JOINTS IN BARRIER RAIL.

DIMENSIONS ARE SHOWN ALONG OUTSIDE FACE OF BARRIER RAIL.

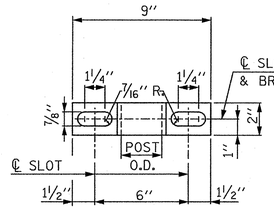

ELEVATION

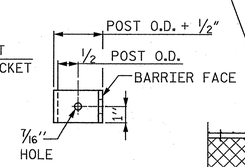

SIDE VIEW

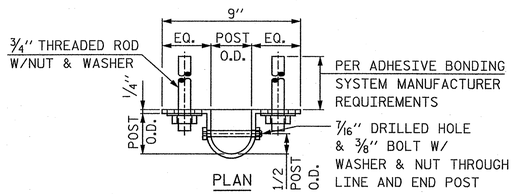

TOP POST BRACKET

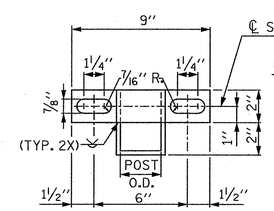

ELEVATION

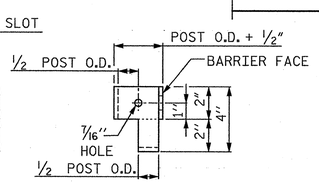

RIGHT SIDE VIEW

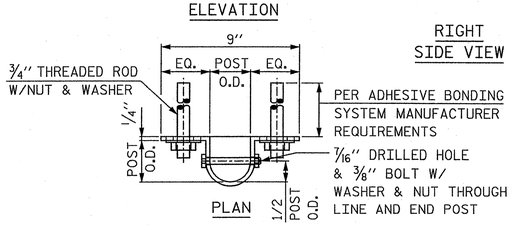

BOTTOM POST BRACKET

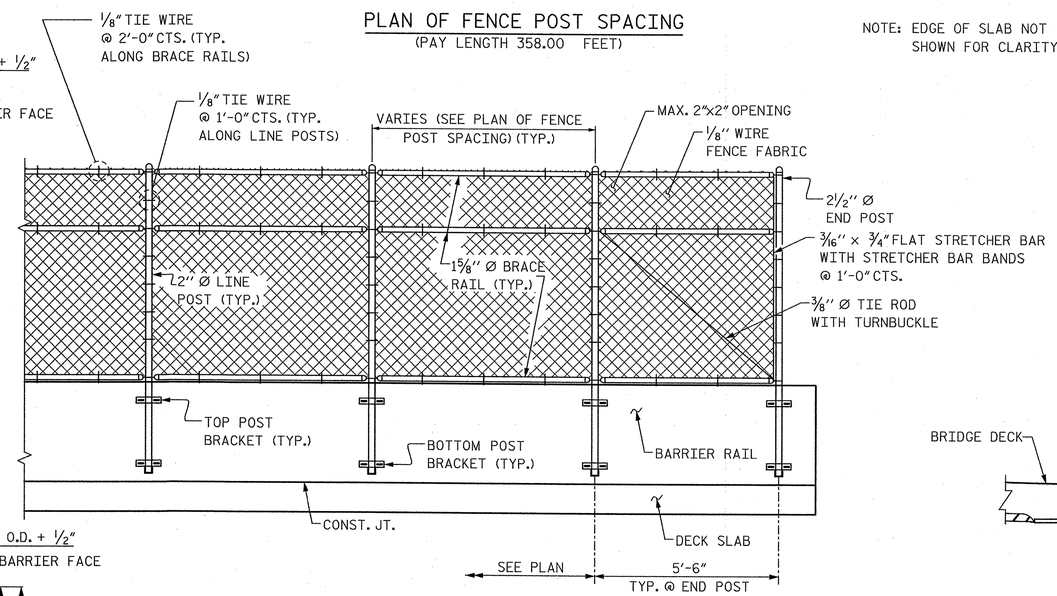

PARTIAL ELEVATION

NOTE: EDGE OF SLAB NOT SHOWN FOR CLARITY.

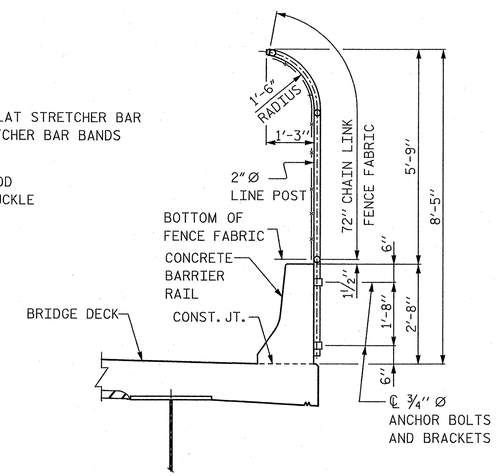

SECTION THRU FENCE

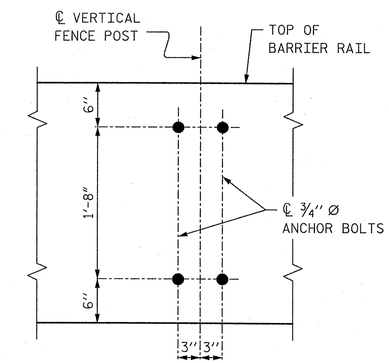

BOLT SETTING DETAIL

PROJECT NO. R-2707B

CLEVELAND COUNTY

STATION: 252+73.29 -L-

STATE OF NORTH CAROLINA
DEPARTMENT OF TRANSPORTATION
RALEIGH

SUPERSTRUCTURE

BRIDGE MOUNTED CHAIN LINK FENCE DETAILS

RIGHT LANE

HNTB

HNTB NORTH CAROLINA, P.C.
NC License No. C-1554
343 E. Six Forks Rd., Suite 200, Raleigh, N.C. 27609

DRAWN BY M. WRIGHT DATE 4/12
CHECKED BY P. BARBER DATE 5/12

DWG. NO. 17

REVISIONS						SHEET NO.
NO.	BY	DATE	NO.	BY	DATE	S-112
1			3			TOTAL SHEETS
2			4			266

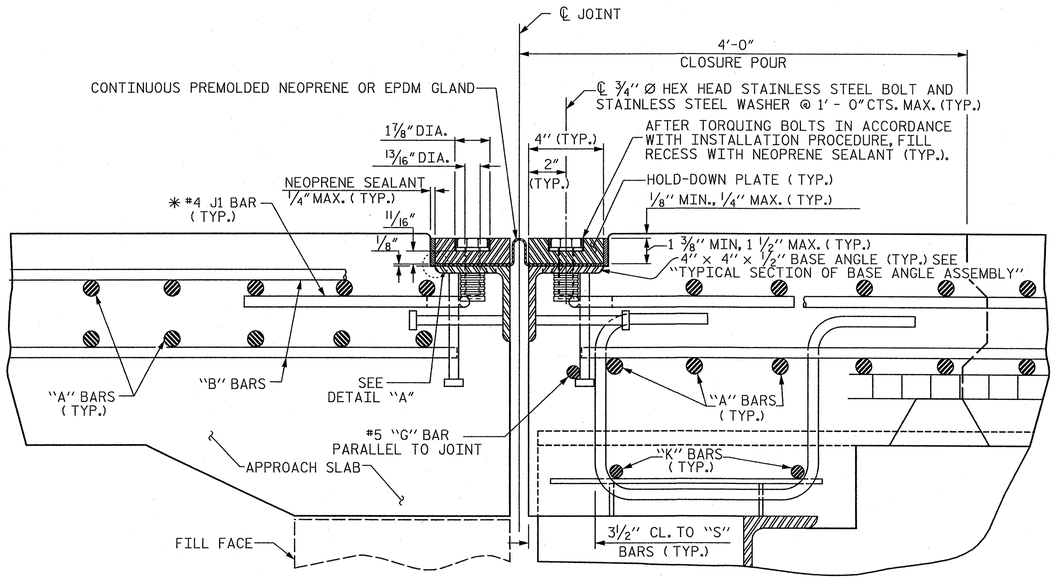

EXPANSION JOINT DETAILS

SECTION NORMAL TO JOINT -- STEEL SUPERSTRUCTURE

✱ THE QUANTITY OF #4 J1 BARS ON THE BILL OF MATERIAL IS BASED ON 1'-0" CENTERS. J1 BARS SHALL BE PLACED AT EACH VERTICAL STUD ANCHOR BOLT. IN THE EVENT THAT THE NUMBER OF VERTICAL STUD ANCHORS EXCEEDS THE NUMBER OF J1 BARS SPECIFIED, ADDITIONAL J1 BARS WILL NOT BE REQUIRED.

INSTALLATION PROCEDURE

1. A TEMPLATE OR OTHER SUITABLE DEVICE SHALL BE USED TO FORM THE TOP OF THE EXPANSION JOINT SEAL BLOCKOUT TO THE PROPER DEPTH AND WIDTH. THE TEMPLATE SHALL BE 4 1/8" TO 4 1/4" WIDE AND OF SUCH THICKNESS AS TO PROVIDE FOR CORRECT FINAL ELEVATION OF TOP OF HOLD-DOWN PLATES. THE TEMPLATE SHALL BE ATTACHED TO THE BASE ANGLE ASSEMBLY WITH THE ¾" Ø HEX HEAD BOLTS PROVIDED FOR THE HOLD-DOWN PLATES. A 1" Ø HOLE SHALL BE PROVIDED IN THE TEMPLATE CENTERED OVER EACH WEEP HOLE IN THE 4" X 4" X ½" BASE ANGLE. OTHER METHODS OF INSURING DRAINAGE THROUGH WEEP HOLES MAY BE EMPLOYED SUBJECT TO ENGINEER'S APPROVAL.
2. AFTER THE CONCRETE HAS BEEN CAST ON BOTH SIDES OF THE JOINT, REMOVE THE TEMPLATE. THOROUGHLY CLEAN THE BOLT HOLES AND THE ANGLE PLATE. REMOVE ANY EXCESS CONCRETE THAT COMES OUT OF THE WEEP HOLES. ANY DAMAGED STEEL SHALL BE COATED WITH A MINIMUM THICKNESS OF 4 DRY MILS OF ZINC-RICH PAINT IN ACCORDANCE WITH THE STANDARD SPECIFICATIONS.
3. LAY THE GLAND ON THE BASE ANGLE AND FIELD MARK THE GLAND FOR THE BOLT HOLES. HOLES IN THE GLAND SHALL BE PUNCHED ⅞" IN DIAMETER WITH A HAND PUNCH.
4. IN ORDER TO CHECK FOR PROPER ALIGNMENT, PLACE THE GLAND AND HOLD-DOWN PLATES ON THE BASE ANGLE. DO NOT APPLY NEOPRENE SEALANT. BOLT THE HOLD-DOWN PLATES TO THE BASE ANGLE BUT DO NOT TIGHTEN. THE ENGINEER SHALL INSPECT THE JOINT SEAL DEVICE FOR PROPER ALIGNMENT.
5. AFTER INSPECTION, REMOVE THE HOLD-DOWN PLATES AND GLAND. APPLY NEOPRENE SEALANT TO THE BASE ANGLE IN ACCORDANCE WITH THE "INSTALLATION SKETCH". PLACE GLAND AND HOLD-DOWN PLATES ON THE BASE ANGLE. BOLT THE HOLD-DOWN PLATES TO THE BASE ANGLE ASSEMBLY AND TORQUE THE BOLTS TO 88 FT-LBS WITH A TORQUE WRENCH. CHECK THE TORQUE AFTER THREE (3) HOURS AND, IF NECESSARY, RETIGHTEN TO 88 FT-LBS. A FINAL CHECK SHALL BE MADE AT SEVEN (7) DAYS. TORQUE SHALL NOT BE LESS THAN 80 FT-LBS AFTER SEVEN (7) DAYS.
6. AFTER PROPER TORQUING, CLEAN THE BOLT HOLE RECESSES AND THE RECESS BETWEEN THE JOINT SEAL DEVICE AND CONCRETE, COMPLETELY FILL THESE RECESSES WITH NEOPRENE SEALANT.

GENERAL NOTES

1. FOR EXPANSION JOINT SEALS, SEE SPECIAL PROVISIONS.
2. ALL PLATES AND ANGLES SHALL CONFORM TO AASHTO M270 GRADE 36 STEEL OR APPROVED EQUAL. ALL HOLD-DOWN BOLTS SHALL CONFORM TO ASTM F593 ALLOY 304 STAINLESS STEEL AND WASHERS SHALL CONFORM TO ASTM F844 EXCEPT THEY SHALL BE MADE FROM ALLOY 304 STAINLESS STEEL. ALL STUD ANCHORS SHALL CONFORM TO AASHTO M169, GRADES 1010 THRU 1020 OR APPROVED EQUAL. ALL CONCRETE INSERTS SHALL BE CLOSED END AND SHALL CONFORM TO AASHTO M169, GRADE 12L14. TENSILE CAPACITY SHALL BE 3000 LBS. MIN.
3. A PREMOLDED CORRUGATED OR NON-CORRUGATED GLAND SHALL BE USED FOR JOINTS SKEWED BETWEEN 50° THRU 130°. FOR JOINTS SKEWED LESS THAN 50° OR MORE THAN 130°, ONLY A CORRUGATED GLAND SHALL BE USED.
4. CLOSED END FERRULES AND STUD ANCHORS SHALL BE SHOP WELDED AND ALL HOLES SHALL BE SHOP DRILLED AS SHOWN ON PLANS. STUD ANCHORS SHALL BE ELECTRIC ARC END WELDED WITH COMPLETE FUSION.
5. SURFACES COMING IN CONTACT WITH NEOPRENE SHALL BE GROUND SMOOTH PRIOR TO METALLIZING.
6. UPON COMPLETION OF SHOP FABRICATION, THE HOLD DOWN PLATE AND BASE ANGLE ASSEMBLY, AS SHOWN IN THE "TYPICAL SECTION OF BASE ANGLE ASSEMBLY", SHALL BE METALLIZED. SEE SPECIAL PROVISION FOR THERMAL SPRAYED COATINGS (METALLIZATION).
7. BASE ANGLE ASSEMBLY SHALL BE CONTINUOUS FOR THE LENGTH OF THE JOINT. AT CROWN BREAKS, THE ENDS OF THE BASE ANGLE ASSEMBLY SHALL BE CUT PARALLEL TO THE BRIDGE CENTERLINE FOR SKEWS LESS THAN 80° AND GREATER THAN 100°. FINISHED WELD SHALL BE GROUND SMOOTH AND COATED WITH A MINIMUM THICKNESS OF 4 DRY MILS OF ZINC-RICH PAINT IN ACCORDANCE WITH THE STANDARD SPECIFICATIONS.
8. FIELD SPLICES OF HOLD-DOWN PLATES SHALL BE KEPT TO A MINIMUM. CONTRACTOR SHALL FURNISH DETAILED PLANS SHOWING PROPOSED SPLICE LOCATIONS FOR APPROVAL. HOLD-DOWN PLATES SHALL NOT EXCEED 20' LENGTHS UNLESS APPROVED BY THE ENGINEER.
9. NO ALTERNATE JOINT DETAILS SHALL BE PERMITTED IN LIEU OF THOSE SHOWN ON THESE PLANS.
10. THE CONTRACTOR MAY, AT HIS OPTION, USE ADHESIVELY ANCHORED ANCHOR BOLTS IN PLACE OF CONCRETE INSERTS FOR COVER PLATES. THE YIELD LOAD OF THE ¾" Ø BOLT IS 10 KIPS. FIELD TESTING OF THE ADHESIVE BONDING SYSTEM IS NOT REQUIRED.

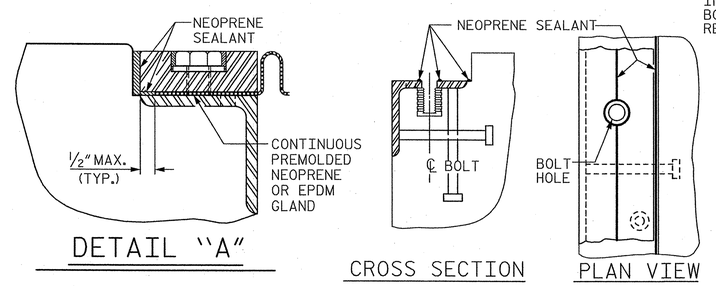

DETAIL "A"

INSTALLATION SKETCH

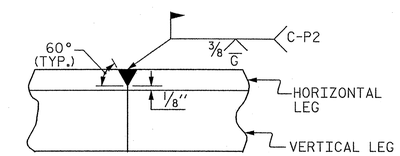

DETAIL- FIELD WELD SPLICE OF BASE ANGLE

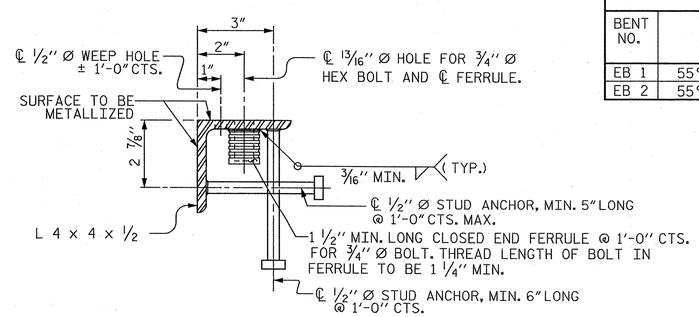

TYPICAL SECTION OF BASE ANGLE ASSEMBLY

MOVEMENT AND SETTING AT JOINT					
BENT NO.	SKEW ANGLE	TOTAL MOVEMENT (ALONG ℄ RDWY)	PERPENDICULAR JOINT OPENING AT 45° F	PERPENDICULAR JOINT OPENING AT 60° F	PERPENDICULAR JOINT OPENING AT 90° F
EB 1	55°-00'-00"	1 13/16"	2"	1 3/4"	1 5/16"
EB 2	55°-00'-00"	0"	1"	1"	1"

PROJECT NO. R-2707B

CLEVELAND COUNTY

STATION: 252+73.29 -L-

NORTH CAROLINA PROFESSIONAL SEAL 12916 ENGINEER PAUL J. BARBER 8/28/12

STATE OF NORTH CAROLINA
DEPARTMENT OF TRANSPORTATION
RALEIGH

STANDARD

EXPANSION JOINT SEAL DETAILS

RIGHT LANE

HNTB NORTH CAROLINA, P.C.
NC License No. C-1554
343 E. Six Forks Rd., Suite 200, Raleigh, N.C. 27609

DRAWN BY M. WRIGHT DATE 4/12
CHECKED BY P. BARBER DATE 5/12
DWG. NO. 18

REVISIONS						SHEET NO.
NO.	BY	DATE	NO.	BY	DATE	S-113
1			3			TOTAL SHEETS
2			4			266

STD. NO. E 1S1

ASSEMBLED BY : M. WRIGHT DATE : 4/12
CHECKED BY : P. BARBER DATE : 5/12

DRAWN BY : REK 9/87
CHECKED BY : CRK 10/87

REV. 5/7/03R RWW/JTE
REV. 5/1/06R TLA/GM
REV. 10/1/11 MAA/GM

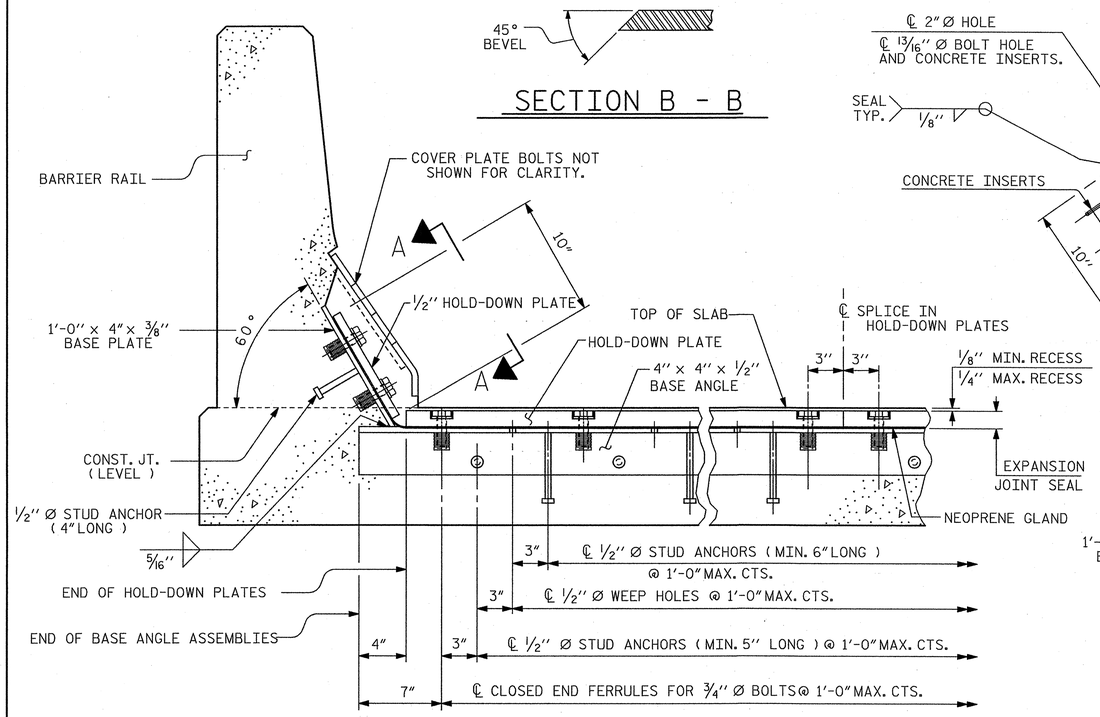

SECTION THRU RAIL NORMAL TO JOINT

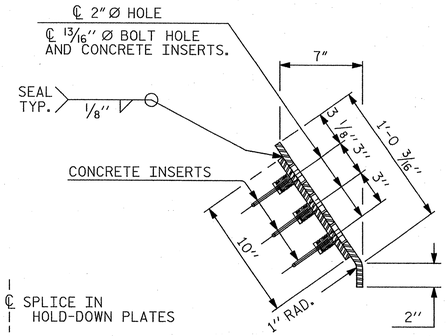

END VIEW

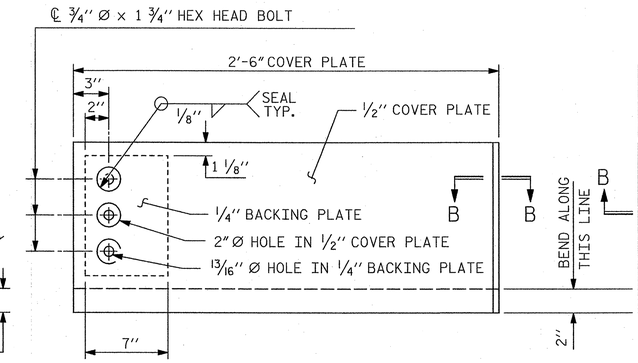

TYPE I - ELEVATION VIEW

(2 REQUIRED)

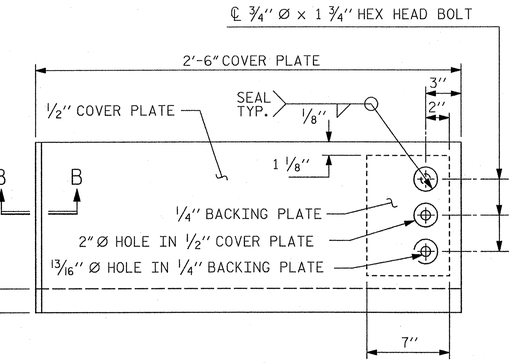

TYPE II - ELEVATION VIEW

(2 REQUIRED)

COVER PLATE DETAILS

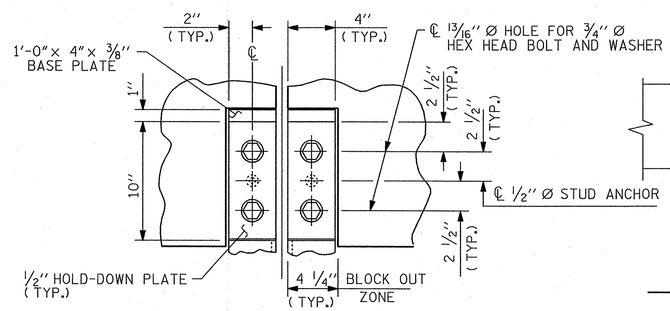

SECTION A - A

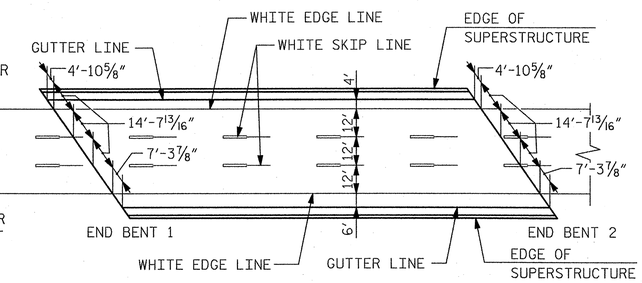

PAVEMENT MARKING ALIGNMENT

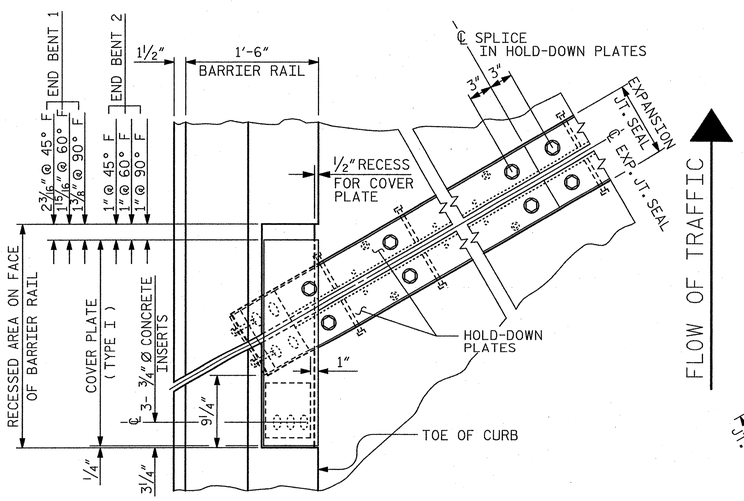

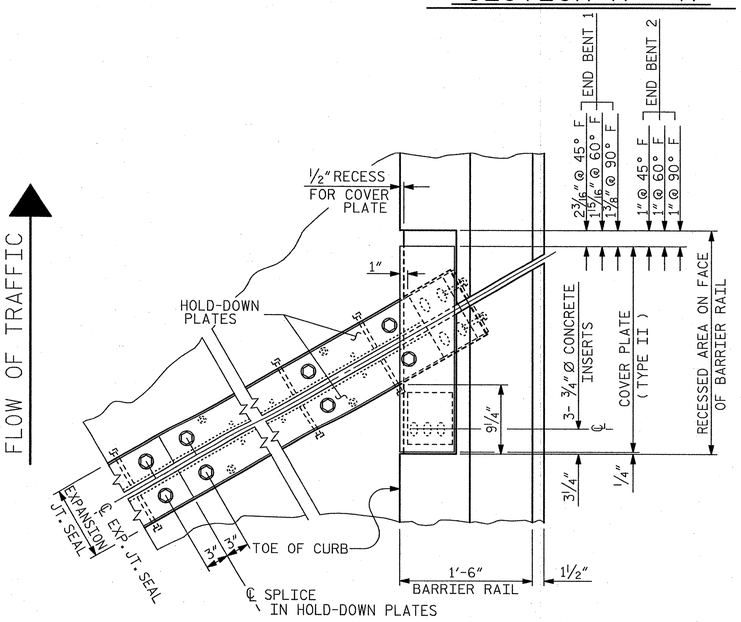

PLAN OF EXPANSION JOINT SEAL

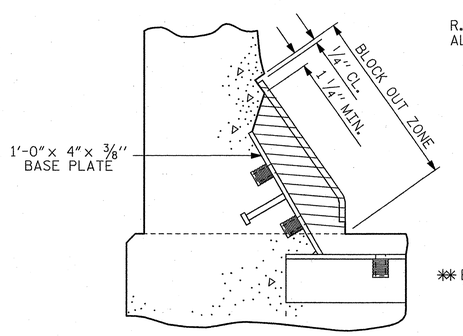

BLOCK OUT DETAIL

SEE " SECTION A - A " FOR OTHER DETAILS.

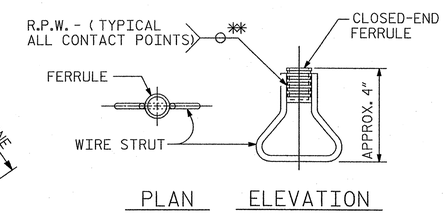

CONCRETE INSERT

** EACH WELDED ATTACHMENT OF WIRE TO FERRULE SHALL DEVELOP THE TENSILE STRENGTH OF THE WIRE.

PROJECT NO. R-2707B

CLEVELAND COUNTY

STATION: 252+73.29 -L-

STATE OF NORTH CAROLINA
DEPARTMENT OF TRANSPORTATION
RALEIGH

STANDARD

EXPANSION JOINT SEAL DETAILS FOR BARRIER RAIL

RIGHT LANE

NORTH CAROLINA PROFESSIONAL SEAL 12916 ENGINEER PAUL J. BARBER 8/28/12

ASSEMBLED BY : M. WRIGHT	DATE : 4/12		
CHECKED BY : P. BARBER	DATE : 5/12		
DRAWN BY : REK 9/87	REV. 10/17/00	RWW/LES	
CHECKED BY : CRK 10/87	REV. 5/1/06	TLA/GM	
	REV. 10/1/11	MAA/GM	

HNTB NORTH CAROLINA, P.C.
NC License No. C-1554
343 E. Six Forks Rd., Suite 200, Raleigh, N.C. 27609

DRAWN BY M. WRIGHT DATE 4/12
CHECKED BY P. BARBER DATE 5/12
DWG. NO. 19

REVISIONS

NO.	BY	DATE	NO.	BY	DATE
1			3		
2			4		

SHEET NO. S-114

TOTAL SHEETS

STD. NO. EJS2

BILL OF MATERIAL
EPOXY COATED

BAR	NO.	SIZE	TYPE	LENGTH	WEIGHT
✳ A1	322	5	STR.	48'-11"	16,428
✳ A2	2	5	STR.	48'-7"	101
✳ A3	2	5	STR.	47'-11"	100
✳ A4	2	5	STR.	47'-3"	99
✳ A5	2	5	STR.	46'-7"	97
✳ A6	2	5	STR.	45'-11"	96
✳ A7	2	5	STR.	45'-3"	94
✳ A8	2	5	STR.	44'-8"	93
✳ A9	2	5	STR.	44'-0"	92
✳ A10	2	5	STR.	43'-4"	90
✳ A11	2	5	STR.	42'-8"	89
✳ A12	2	5	STR.	42'-0"	88
✳ A13	2	5	STR.	41'-4"	86
✳ A14	2	5	STR.	40'-8"	85
✳ A15	2	5	STR.	40'-1"	84
✳ A16	2	5	STR.	39'-5"	82
✳ A17	2	5	STR.	38'-9"	81
✳ A18	2	5	STR.	38'-1"	79
✳ A19	2	5	STR.	37'-5"	78
✳ A20	2	5	STR.	36'-9"	77
✳ A21	2	5	STR.	36'-2"	75
✳ A22	2	5	STR.	35'-6"	74
✳ A23	2	5	STR.	34'-10"	73
✳ A24	2	5	STR.	34'-2"	71
✳ A25	2	5	STR.	33'-6"	70
✳ A26	2	5	STR.	32'-10"	68
✳ A27	2	5	STR.	32'-2"	67
✳ A28	2	5	STR.	31'-7"	66
✳ A29	2	5	STR.	30'-11"	64
✳ A30	2	5	STR.	30'-3"	63
✳ A31	2	5	STR.	29'-7"	62
✳ A32	2	5	STR.	28'-11"	60
✳ A33	2	5	STR.	28'-3"	59
✳ A34	2	5	STR.	27'-7"	58
✳ A35	2	5	STR.	27'-0"	56
✳ A36	2	5	STR.	26'-4"	55
✳ A37	2	5	STR.	25'-8"	54
✳ A38	2	5	STR.	25'-0"	52
✳ A39	2	5	STR.	24'-4"	51
✳ A40	2	5	STR.	23'-8"	49
✳ A41	2	5	STR.	23'-0"	48
✳ A42	2	5	STR.	22'-5"	47
✳ A43	2	5	STR.	21'-9"	45
✳ A44	2	5	STR.	21'-1"	44

BILL OF MATERIAL
EPOXY COATED

BAR	NO.	SIZE	TYPE	LENGTH	WEIGHT
✳ A45	2	5	STR.	20'-5"	43
✳ A46	2	5	STR.	19'-9"	41
✳ A47	2	5	STR.	19'-1"	40
✳ A48	2	5	STR.	18'-5"	38
✳ A49	2	5	STR.	17'-10"	37
✳ A50	2	5	STR.	17'-2"	36
✳ A51	2	5	STR.	16'-6"	34
✳ A52	2	5	STR.	15'-10"	33
✳ A53	2	5	STR.	15'-2"	32
✳ A54	2	5	STR.	14'-6"	30
✳ A55	2	5	STR.	13'-10"	29
✳ A56	2	5	STR.	13'-3"	28
✳ A57	2	5	STR.	12'-7"	26
✳ A58	2	5	STR.	11'-11"	25
✳ A59	2	5	STR.	11'-3"	23
✳ A60	2	5	STR.	10'-7"	22
✳ A61	2	5	STR.	9'-11"	21
✳ A62	2	5	STR.	9'-3"	19
✳ A63	2	5	STR.	8'-8"	18
✳ A64	2	5	STR.	8'-0"	17
✳ A65	2	5	STR.	7'-4"	15
✳ A66	2	5	STR.	6'-8"	14
✳ A67	2	5	STR.	6'-0"	13
✳ A68	2	5	STR.	5'-4"	11
✳ A69	2	5	STR.	4'-8"	10
✳ A70	2	5	STR.	4'-1"	9
✳ A71	2	5	STR.	3'-5"	7
✳ A72	2	5	STR.	2'-9"	6
✳ A73	2	5	STR.	2'-1"	4
✳ A74	6	6	STR.	6'-0"	54
✳ B1	245	4	STR.	27'-9"	4,542
✳ G1	2	5	STR.	59'-8"	124
✳ J1	112	4	4	1'-5"	106
✳ K1	16	5	1	12'-6"	209
✳ K2	24	5	2	16'-8"	417
✳ S1	72	4	3	4'-11"	236
				TOTAL	25,919

✳ DENOTES EPOXY COATED REINFORCING STEEL

BILL OF MATERIAL
UNCOATED

BAR	NO.	SIZE	TYPE	LENGTH	WEIGHT
A101	322	5	STR.	48'-11"	16,428
A102	2	5	STR.	48'-7"	101
A103	2	5	STR.	47'-11"	100
A104	2	5	STR.	47'-3"	99
A105	2	5	STR.	46'-7"	97
A106	2	5	STR.	45'-11"	96
A107	2	5	STR.	45'-3"	94
A108	2	5	STR.	44'-8"	93
A109	2	5	STR.	44'-0"	92
A110	2	5	STR.	43'-4"	90
A111	2	5	STR.	42'-8"	89
A112	2	5	STR.	42'-0"	88
A113	2	5	STR.	41'-4"	86
A114	2	5	STR.	40'-8"	85
A115	2	5	STR.	40'-1"	84
A116	2	5	STR.	39'-5"	82
A117	2	5	STR.	38'-9"	81
A118	2	5	STR.	38'-1"	79
A119	2	5	STR.	37'-5"	78
A120	2	5	STR.	36'-9"	77
A121	2	5	STR.	36'-2"	75
A122	2	5	STR.	35'-6"	74
A123	2	5	STR.	34'-10"	73
A124	2	5	STR.	34'-2"	71
A125	2	5	STR.	33'-6"	70
A126	2	5	STR.	32'-10"	68
A127	2	5	STR.	32'-2"	67
A128	2	5	STR.	31'-7"	66
A129	2	5	STR.	30'-11"	64
A130	2	5	STR.	30'-3"	63
A131	2	5	STR.	29'-7"	62
A132	2	5	STR.	28'-11"	60
A133	2	5	STR.	28'-3"	59
A134	2	5	STR.	27'-7"	58
A135	2	5	STR.	27'-0"	56
A136	2	5	STR.	26'-4"	55
A137	2	5	STR.	25'-8"	54
A138	2	5	STR.	25'-0"	52
A139	2	5	STR.	24'-4"	51
A140	2	5	STR.	23'-8"	49
A141	2	5	STR.	23'-0"	48
A142	2	5	STR.	22'-5"	47
A143	2	5	STR.	21'-9"	45
A144	2	5	STR.	21'-1"	44

BILL OF MATERIAL
UNCOATED

BAR	NO.	SIZE	TYPE	LENGTH	WEIGHT
A145	2	5	STR.	20'-5"	43
A146	2	5	STR.	19'-9"	41
A147	2	5	STR.	19'-1"	40
A148	2	5	STR.	18'-5"	38
A149	2	5	STR.	17'-10"	37
A150	2	5	STR.	17'-2"	36
A151	2	5	STR.	16'-6"	34
A152	2	5	STR.	15'-10"	33
A153	2	5	STR.	15'-2"	32
A154	2	5	STR.	14'-6"	30
A155	2	5	STR.	13'-10"	29
A156	2	5	STR.	13'-3"	28
A157	2	5	STR.	12'-7"	26
A158	2	5	STR.	11'-11"	25
A159	2	5	STR.	11'-3"	23
A160	2	5	STR.	10'-7"	22
A161	2	5	STR.	9'-11"	21
A162	2	5	STR.	9'-3"	19
A163	2	5	STR.	8'-8"	18
A164	2	5	STR.	8'-0"	17
A165	2	5	STR.	7'-4"	15
A166	2	5	STR.	6'-8"	14
A167	2	5	STR.	6'-0"	13
A168	2	5	STR.	5'-4"	11
A169	2	5	STR.	4'-8"	10
A170	2	5	STR.	4'-1"	9
A171	2	5	STR.	3'-5"	7
A172	2	5	STR.	2'-9"	6
A173	2	5	STR.	2'-1"	4
B101	248	5	STR.	47'-2"	12,200
				TOTAL	32,431

BAR TYPES

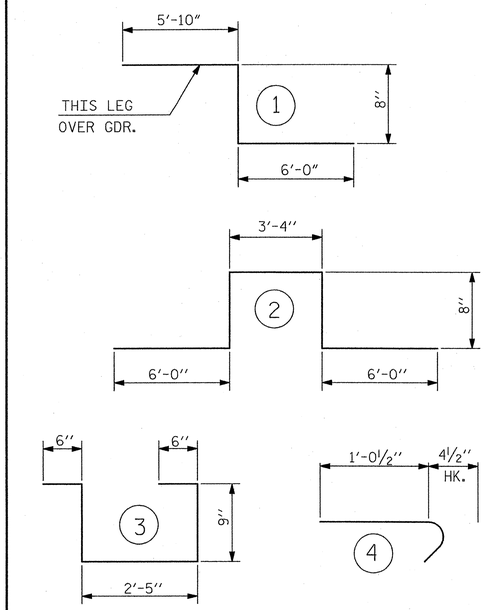

ALL BAR DIMENSIONS ARE OUT TO OUT

SUPERSTRUCTURE BILL OF MATERIAL

	CLASS AA CONCRETE	REINFORCING STEEL	EPOXY COATED REINFORCING STEEL
	(CU.YDS.)	(LBS.)	(LBS.)
SPAN "A"	275.6	32,431	25,919
TOTALS ✳✳	275.6	32,431	25,919

✳✳ QUANTITIES FOR BARRIER RAIL ARE NOT INCLUDED

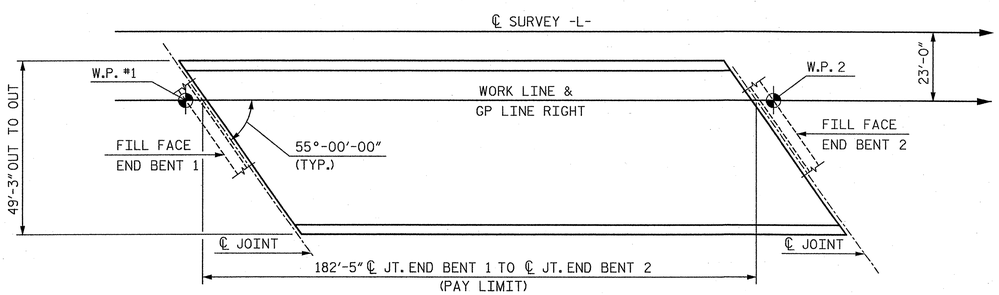

LAYOUT FOR COMPUTING AREA REINFORCED CONCRETE DECK SLAB
(SQ. FT. = 8,984.0)

SUPERSTRUCTURE REINFORCING STEEL LENGTHS ARE BASED ON THE FOLLOWING MINIMUM SPLICE LENGTHS

BAR SIZE	SUPERSTRUCTURE EXCEPT APPROACH SLABS, PARAPET, AND BARRIER RAIL		APPROACH SLABS		PARAPET AND BARRIER RAIL
	EPOXY COATED	UNCOATED	EPOXY COATED	UNCOATED	
#4	2'-0"	1'-9"	2'-0"	1'-9"	2'-9"
#5	2'-6"	2'-2"	2'-6"	2'-2"	3'-5"
#6	3'-0"	2'-7"	3'-10"	2'-7"	4'-4"
#7	5'-3"	3'-6"			
#8	6'-10"	4'-7"			

GROOVING BRIDGE FLOORS

APPROACH SLABS	2042.8	SQ.FT.
BRIDGE DECK	7,789.2	SQ.FT.
TOTAL	9,832.0	SQ.FT.

NORTH CAROLINA PROFESSIONAL SEAL 12916 ENGINEER PAUL J. BARBER 5/25/12

PROJECT NO. R-2707B
CLEVELAND COUNTY
STATION: 252+73.29 -L-

STATE OF NORTH CAROLINA
DEPARTMENT OF TRANSPORTATION
RALEIGH

STANDARD
SUPERSTRUCTURE
BILL OF MATERIAL
RIGHT LANE

ASSEMBLED BY : J. BAYNE	DATE : 4/12	
CHECKED BY : P. BARBER	DATE : 5/12	
DRAWN BY : JMB 5/87	REV. 8/16/99	RWW/LES
CHECKED BY : SJD 9/87	REV. 5/1/06	TLA/GM
	REV. 10/1/11	MAA/GM

HNTB
HNTB NORTH CAROLINA, P.C.
NC License No. C-1554
343 E. Six Forks Rd., Suite 200, Raleigh, N.C. 27609
DRAWN BY J. BAYNE DATE 4/12
CHECKED BY P. BARBER DATE 5/12
DWG. NO. 20

REVISIONS						SHEET NO.
NO.	BY	DATE	NO.	BY	DATE	S-115
1			3			TOTAL SHEETS
2			4			266

STD. NO. BOM1

NOTES:

FOR NOTES, SEE SHEET 3 OF 3.

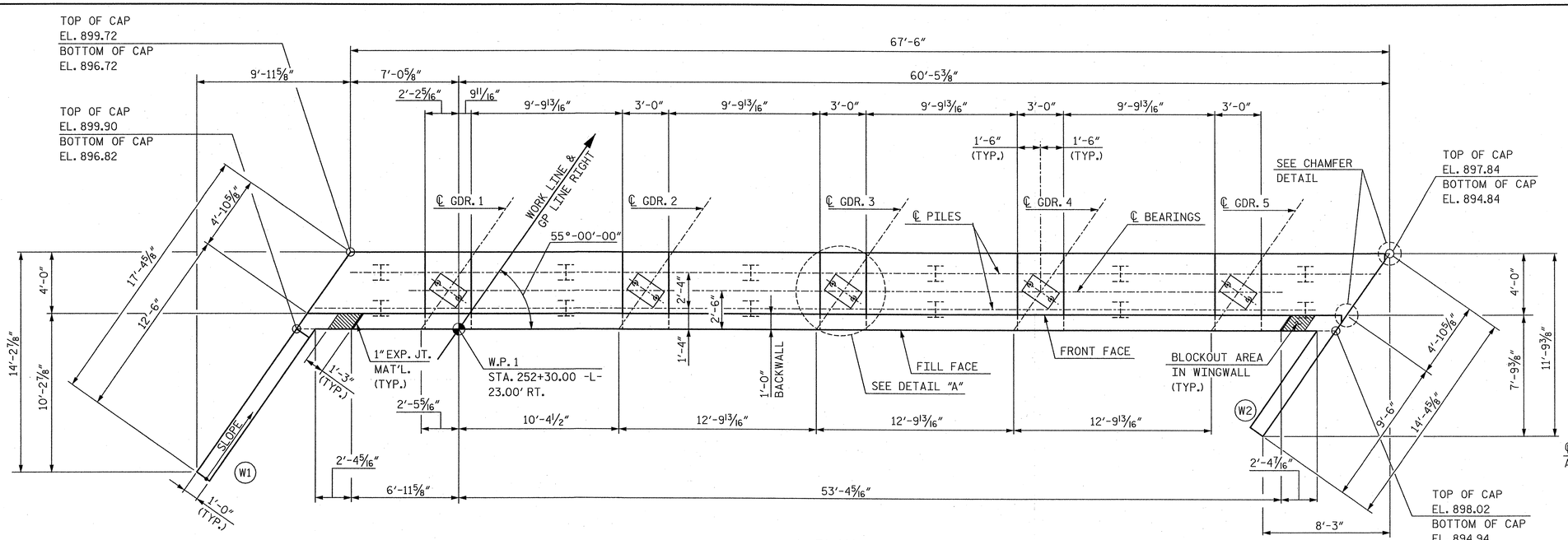

PLAN

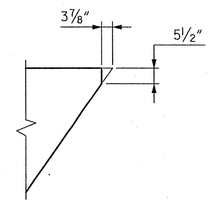

CHAMFER DETAIL

TOP OF PILE ELEVATIONS	
PILE GROUP	ELEVATION
1	897.67
2	897.33
3	897.00
4	896.66
5	896.33
6	896.00

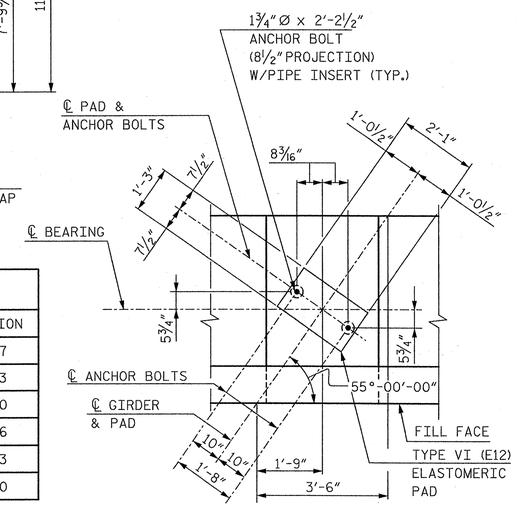

DETAIL A

NOTE: FOR PIPE INSERT DETAILS, SEE BEARING SHEET.

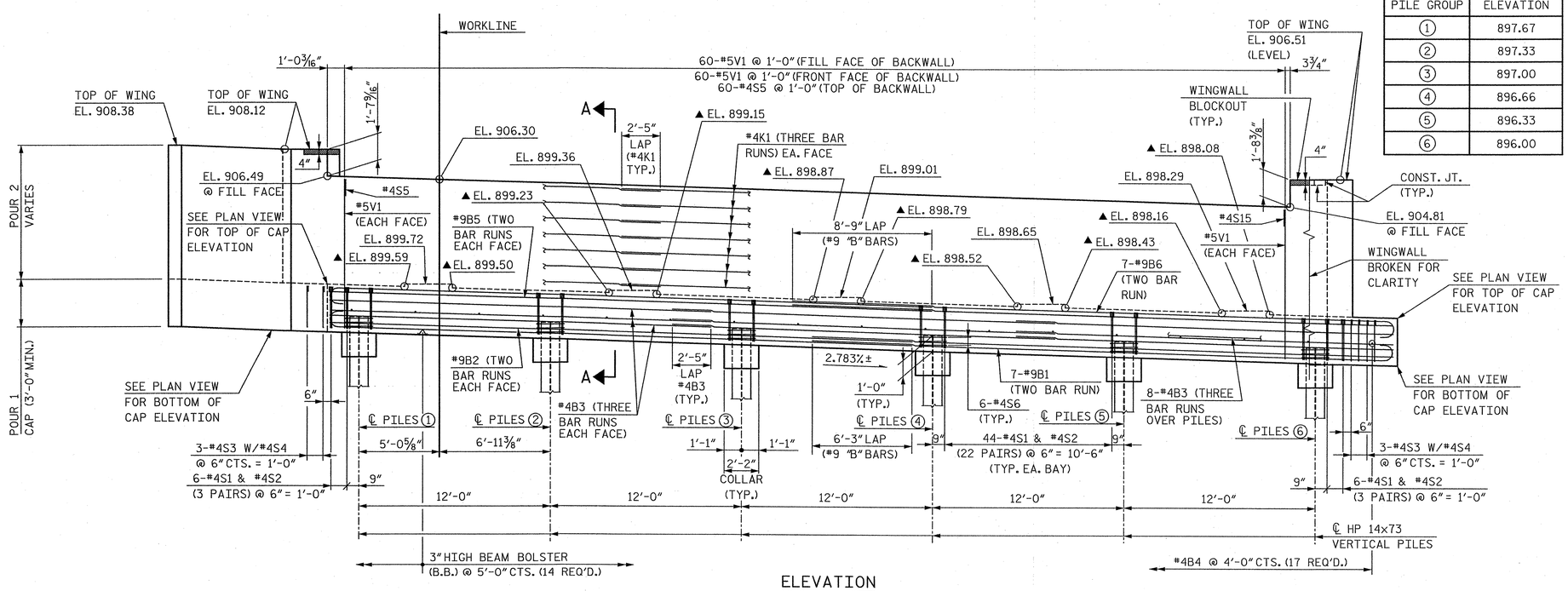

ELEVATION

▲FOR LOCATION OF ELEVATIONS BETWEEN BRIDGE SEATS, SEE SECTION A-A, SHEET 3 OF 3.

NORTH CAROLINA PROFESSIONAL SEAL 12916 ENGINEER PAUL J. BARBER 8/28/12

PROJECT NO. R-2707B

CLEVELAND COUNTY

STATION: 252+73.29 -L-

SHEET 1 OF 3

STATE OF NORTH CAROLINA
DEPARTMENT OF TRANSPORTATION
RALEIGH

SUBSTRUCTURE

END BENT 1

RIGHT LANE

HNTB NORTH CAROLINA, P.C.
NC License No. C-1554
343 E. Six Forks Rd., Suite 200, Raleigh, N.C. 27609

DRAWN BY M. WRIGHT DATE 6/12
CHECKED BY P. BARBER DATE 6/12

DWG. NO. 21

REVISIONS						SHEET NO.
NO.	BY	DATE	NO.	BY	DATE	S-116
1			3			TOTAL SHEETS
2			4			266

NOTES:

FOR NOTES, SEE SHEET 3 OF 3.

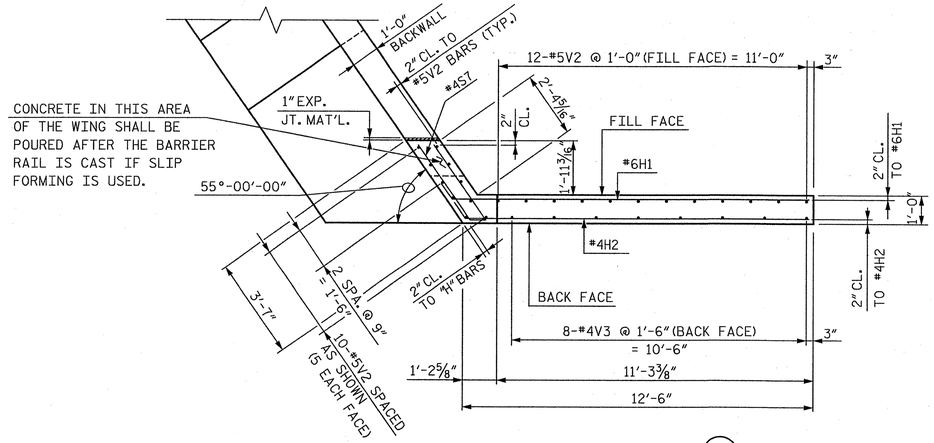

PLAN OF WING (W1)

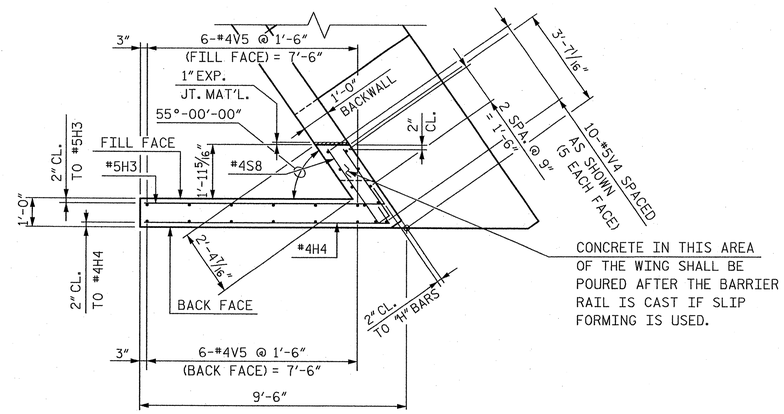

PLAN OF WING (W2)

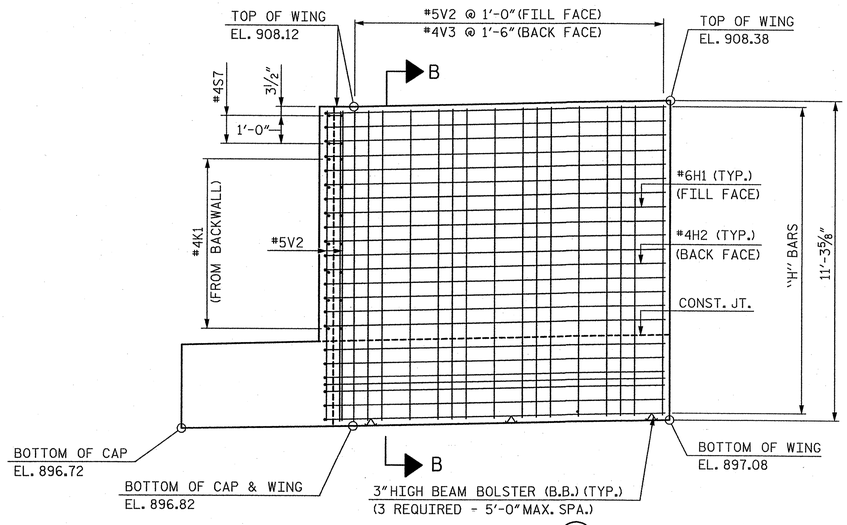

ELEVATION OF WING (W1)

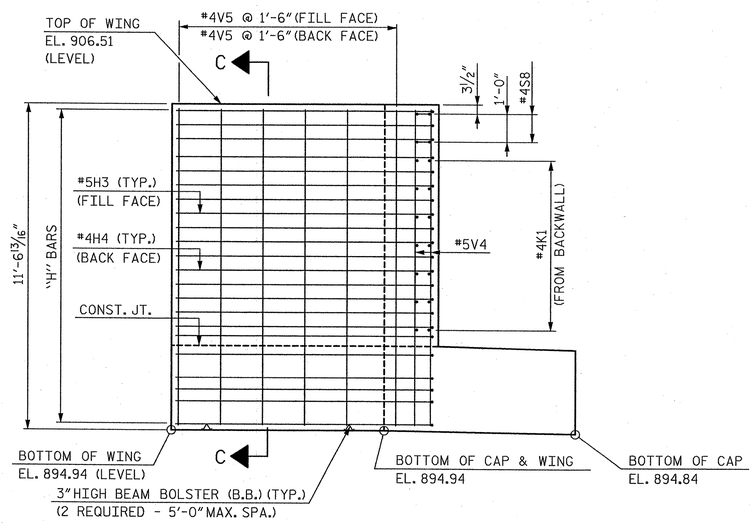

ELEVATION OF WING (W2)

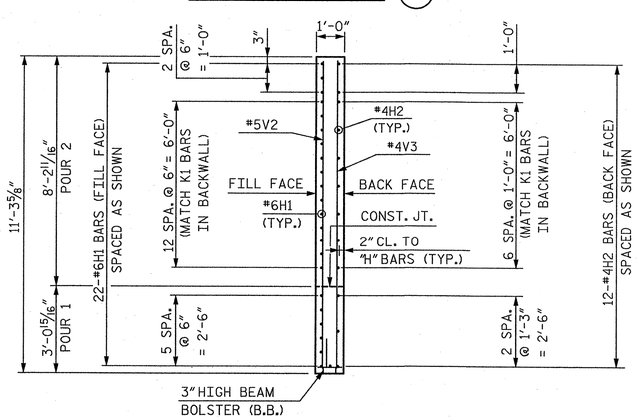

SECTION B-B

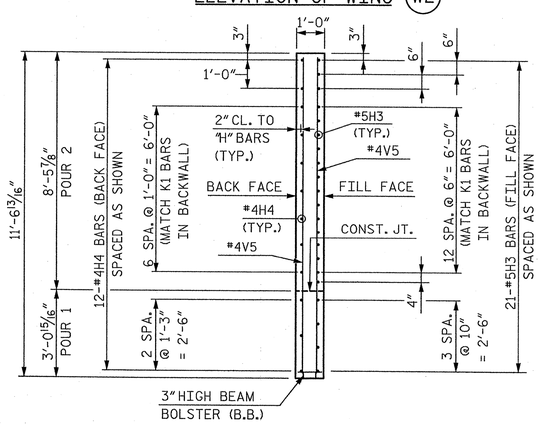

SECTION C-C

PROJECT NO. R-2707B

CLEVELAND COUNTY

STATION: 252+73.29 -L-

SHEET 2 OF 3

STATE OF NORTH CAROLINA
DEPARTMENT OF TRANSPORTATION
RALEIGH

SUBSTRUCTURE

END BENT 1

RIGHT LANE

NORTH CAROLINA PROFESSIONAL SEAL 12916 ENGINEER PAUL J. BARBER 8/28/12

HNTB

HNTB NORTH CAROLINA, P.C.
NC License No. C-1554
343 E. Six Forks Rd., Suite 200, Raleigh, N.C. 27609

DRAWN BY M. WRIGHT DATE 6/12
CHECKED BY P. BARBER DATE 6/12

DWG. NO. 22

REVISIONS						SHEET NO.
NO.	BY	DATE	NO.	BY	DATE	S-117
1			3			TOTAL SHEETS
2			4			266

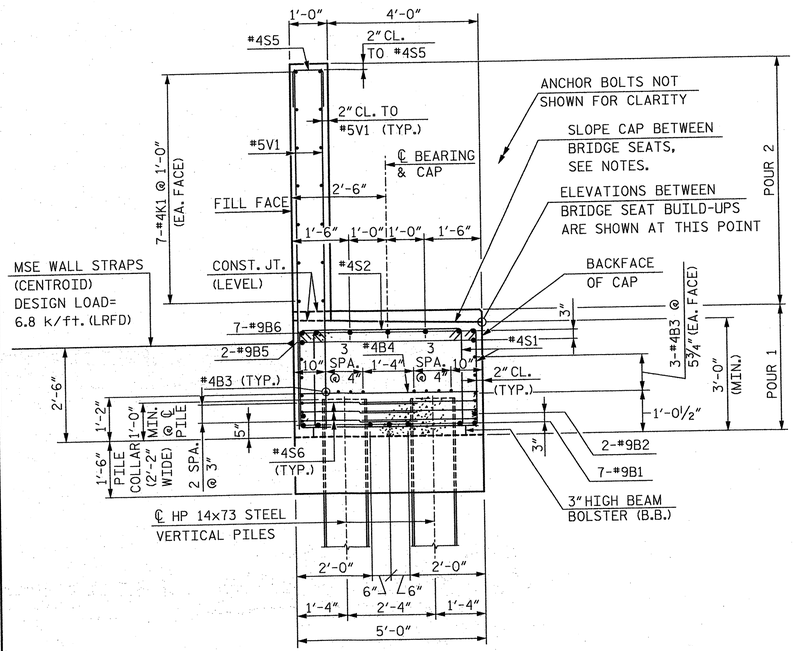

SECTION A-A

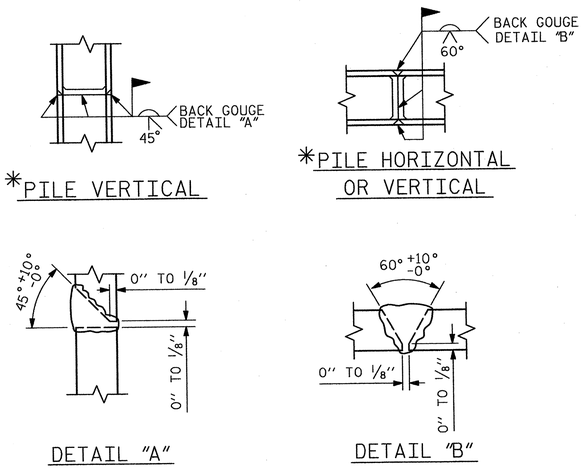

* POSITION OF PILE DURING WELDING.

PILE SPLICE DETAILS

BAR TYPES

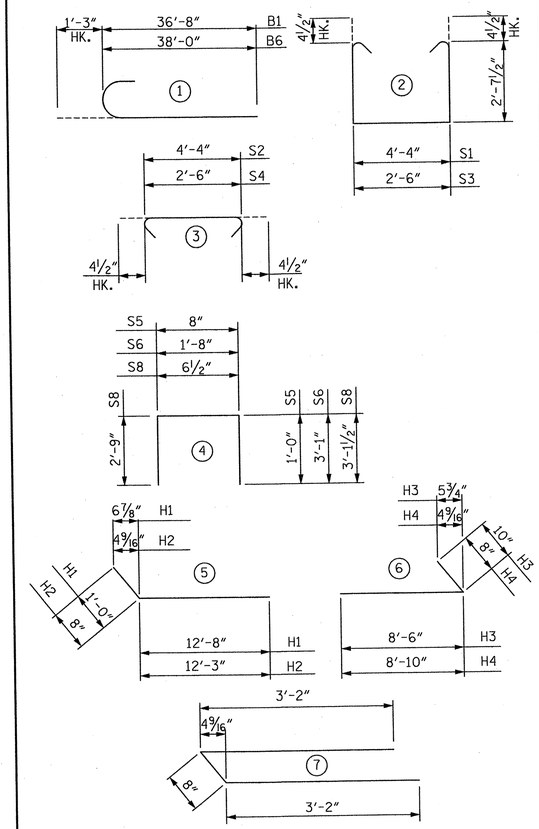

ALL BAR DIMENSIONS ARE OUT TO OUT

BILL OF REINFORCING

END BENT 1

MARK	NO.	SIZE	TYPE	LENGTH	WEIGHT
B1	14	9	1	38'-0"	1.809
B2	4	9	STR.	36'-9"	500
B3	42	4	STR.	24'-0"	673
B4	17	4	STR.	4'-8"	53
B5	4	9	STR.	38'-0"	517
B6	14	9	1	39'-3"	1,868
H1	22	6	5	13'-8"	452
H2	12	4	5	12'-11"	104
H3	21	5	6	9'-4"	204
H4	12	4	6	9'-6"	76
K1	42	4	STR.	24'-0"	673
S1	232	4	2	10'-4"	1,601
S2	232	4	3	5'-1"	788
S3	6	4	2	8'-6"	34
S4	6	4	3	3'-3"	13
S5	60	4	4	2'-8"	107
S6	36	4	4	7'-10"	188
S7	2	4	7	7'-0"	9
S8	2	4	4	6'-5"	9
V1	120	5	STR.	9'-4"	1,168
V2	22	5	STR.	10'-10"	249
V3	8	4	STR.	10'-10"	58
V4	10	5	STR.	11'-0"	115
V5	12	4	STR.	11'-1"	89

QUANTITIES

REINFORCING STEEL	LBS.	11,357
CLASS A CONCRETE BREAKDOWN		
POUR 1 - CAP & BOTT. OF WINGS	CU. YDS.	40.7
POUR 2 - TOP OF WINGS & BACKWALL	CU. YDS.	23.2
TOTAL	CU. YDS.	63.9
HP 14x73 STEEL PILES	NO.	12
	FEET	720

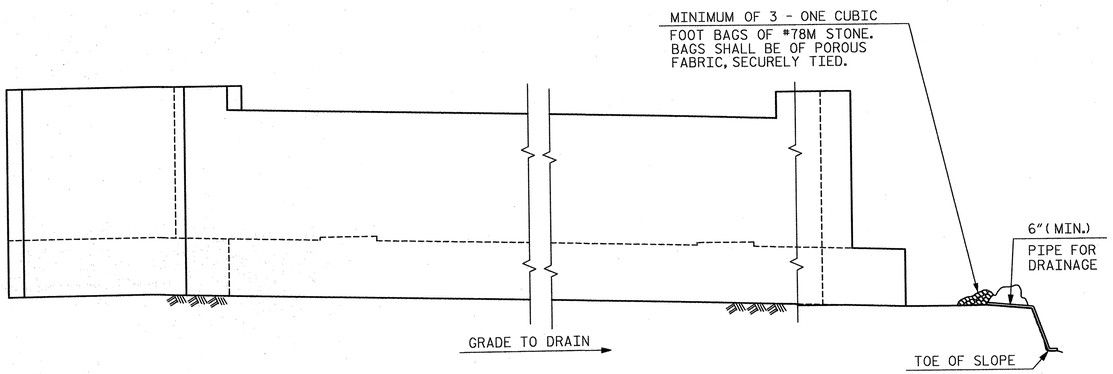

BAGGED STONE AND PIPE SHALL BE PLACED IMMEDIATELY AFTER COMPLETION OF END BENT EXCAVATION. PIPE MAY BE EITHER CONCRETE, CORRUGATED STEEL, CORRUGATED ALUMINUM ALLOY OR CORRUGATED PLASTIC. PERFORATED PIPE WILL NOT BE ALLOWED.

BAGGED STONE SHALL REMAIN IN PLACE UNTIL THE ENGINEER DIRECTS THAT IT BE REMOVED. THE CONTRACTOR SHALL REMOVE AND DISPOSE OF SILT ACCUMULATIONS AT BAGGED STONE WHEN SO DIRECTED BY THE ENGINEER. BAGS SHALL BE REMOVED AND REPLACED WHENEVER THE ENGINEER DETERMINES THAT THEY HAVE DETERIORATED AND LOST THEIR EFFECTIVENESS.

NO SEPARATE PAYMENT WILL BE MADE FOR THIS WORK AND THE ENTIRE COST OF THIS WORK SHALL BE INCLUDED IN THE UNIT CONTRACT PRICE FOR THE SEVERAL PAY ITEMS.

TEMPORARY DRAINAGE AT END BENT 1

NOTES:

STIRRUPS IN CAP MAY BE SHIFTED AS NECESSARY TO CLEAR ANCHOR BOLTS.

BACKWALL SHALL BE PLACED BEFORE APPLYING THE EPOXY PROTECTIVE COATING.

THE TOP SURFACE AREAS OF THE END BENT CAP SHALL BE CURED IN ACCORDANCE WITH THE STANDARD SPECIFICATIONS, EXCEPT THAT THE MEMBRANE CURING COMPOUND METHOD SHALL NOT BE USED.

THE TOP SURFACE OF THE END BENT CAP EXCEPT THE BRIDGE SEAT BUILDUPS SHALL BE SLOPED TRANSVERSELY FROM THE FILL FACE TO THE BACK FACE AT THE RATE OF 2%.

EPOXY COAT THE END BENT CAP AFTER ADJUSTMENTS ARE MADE TO BEARINGS AND ANCHOR BOLTS ARE GROUTED.

PROJECT NO. R-2707B
CLEVELAND COUNTY
STATION: 252+73.29 -L-

SHEET 3 OF 3

STATE OF NORTH CAROLINA
DEPARTMENT OF TRANSPORTATION
RALEIGH

SUBSTRUCTURE

END BENT 1

RIGHT LANE

NORTH CAROLINA PROFESSIONAL SEAL 12916 ENGINEER PAUL J. BARBER 3/25/14

HNTB NORTH CAROLINA, P.C.
NC License No. C-1554
343 E. Six Forks Rd., Suite 200, Raleigh, N.C. 27609

DRAWN BY M. WRIGHT DATE 3/14
CHECKED BY P. BARBER DATE 3/14
DWG. NO. 23

REVISIONS						
NO.	BY	DATE	NO.	BY	DATE	
1			3			
2			4			

SHEET NO. S-118
TOTAL SHEETS 266

NOTES:

FOR NOTES, SEE SHEET 3 OF 3.

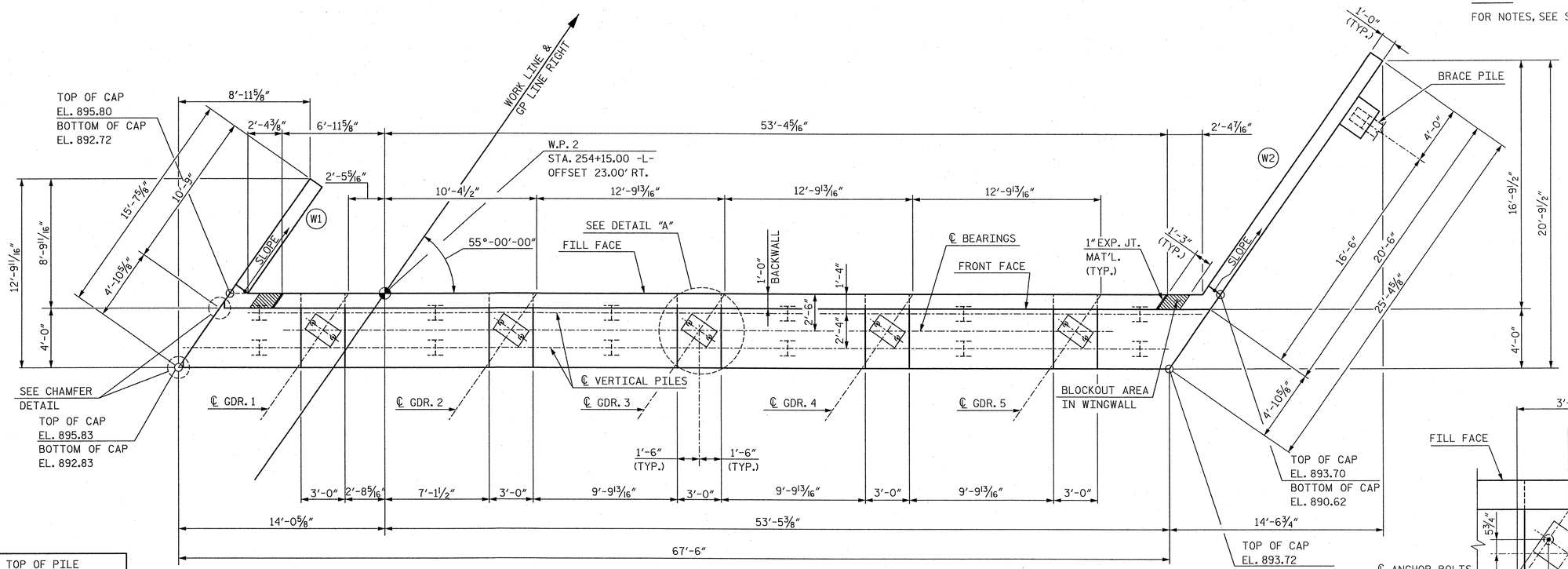

PLAN

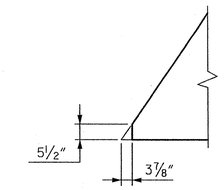

CHAMFER DETAIL

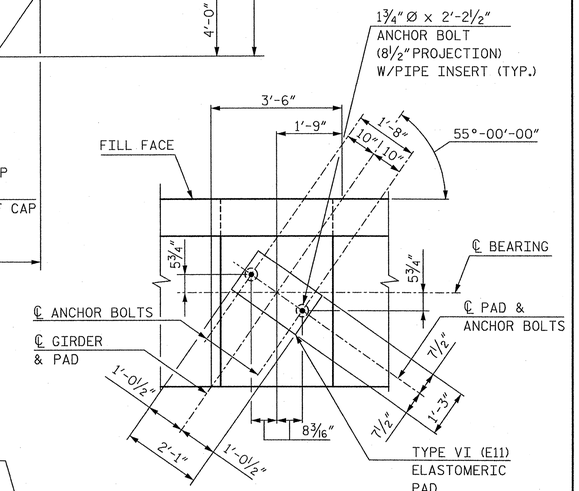

DETAIL A

NOTE: FOR PIPE INSERT DETAILS, SEE BEARING SHEET.

TOP OF PILE ELEVATIONS	
PILE GROUP	ELEVATION
1	893.66
2	893.28
3	892.91
4	892.54
5	892.16
6	891.79

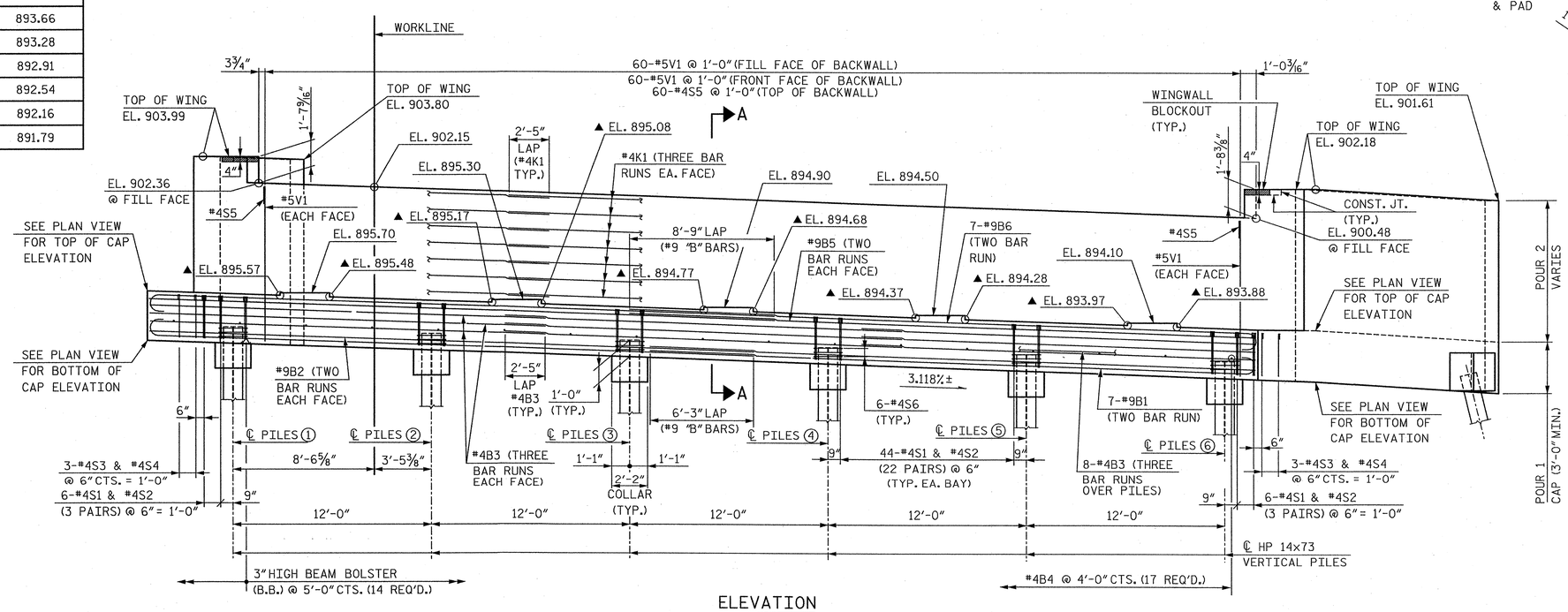

ELEVATION

▲FOR LOCATION OF ELEVATIONS BETWEEN BRIDGE SEATS, SEE SECTION A-A, SHEET 3 OF 3.

NORTH CAROLINA PROFESSIONAL SEAL 12916 ENGINEER PAUL J. BARBER 6/28/12

PROJECT NO. R-2707B

CLEVELAND COUNTY

STATION: 252+73.29 -L-

SHEET 1 OF 3

STATE OF NORTH CAROLINA
DEPARTMENT OF TRANSPORTATION
RALEIGH

SUBSTRUCTURE

END BENT 2

RIGHT LANE

HNTB NORTH CAROLINA, P.C.
NC License No. C-1554
343 E. Six Forks Rd., Suite 200, Raleigh, N.C. 27609

DRAWN BY M. WRIGHT DATE 6/12
CHECKED BY D. HAWKINS DATE 6/12

DWG. NO. 24

REVISIONS						SHEET NO.
NO.	BY	DATE	NO.	BY	DATE	S-119
1			3			TOTAL SHEETS
2			4			[illegible]

NOTES:

FOR NOTES, SEE SHEET 3 OF 3.

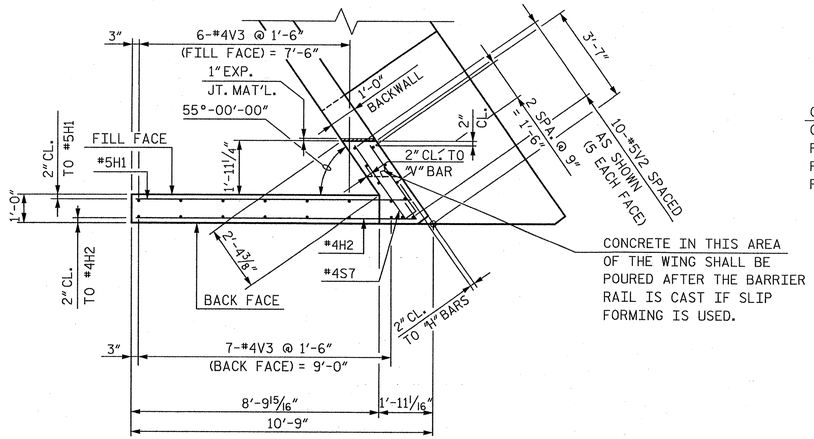

PLAN OF WING (W1)

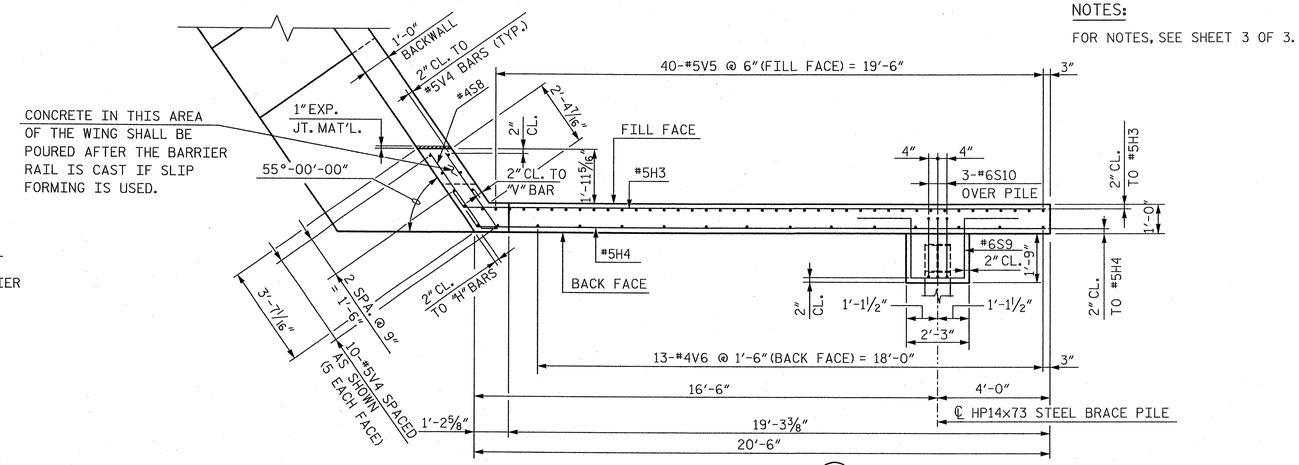

PLAN OF WING (W2)

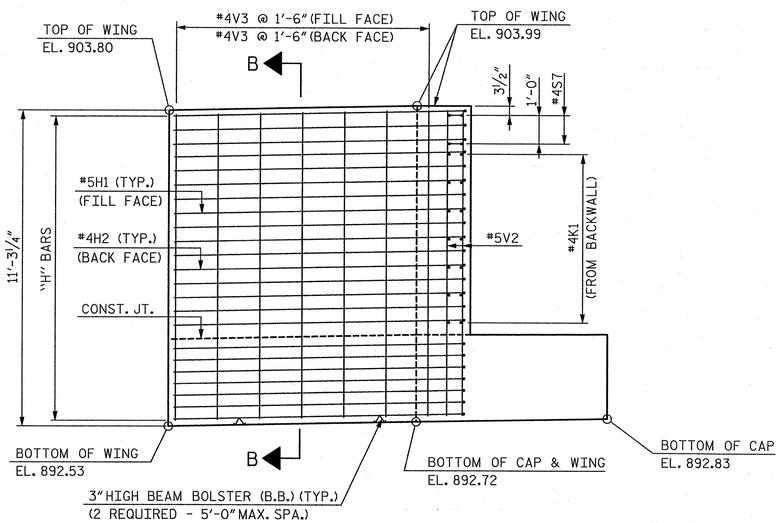

ELEVATION OF WING (W1)

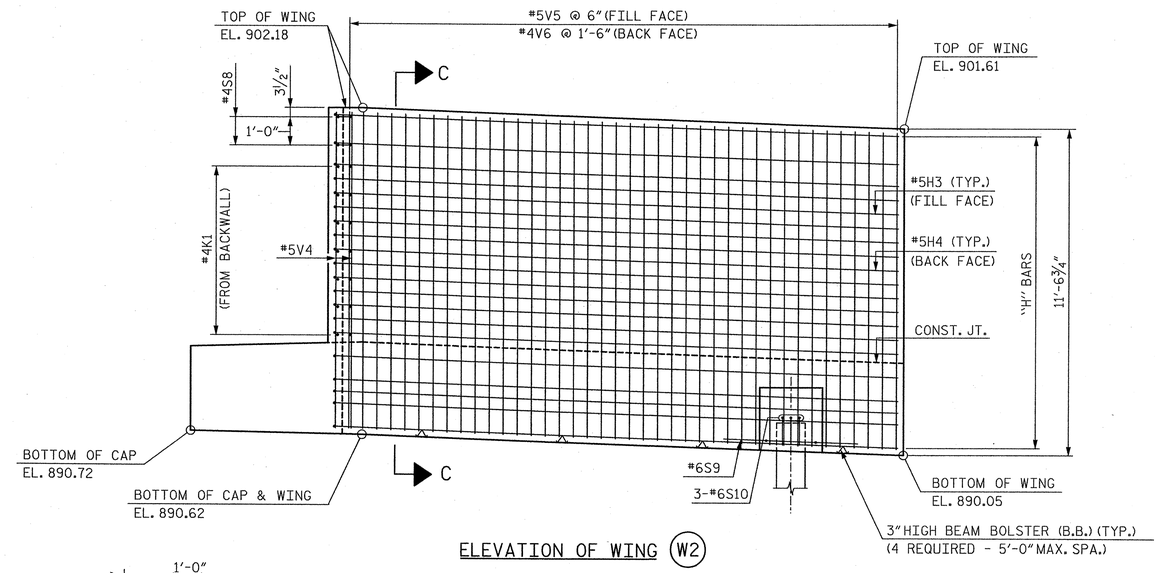

ELEVATION OF WING (W2)

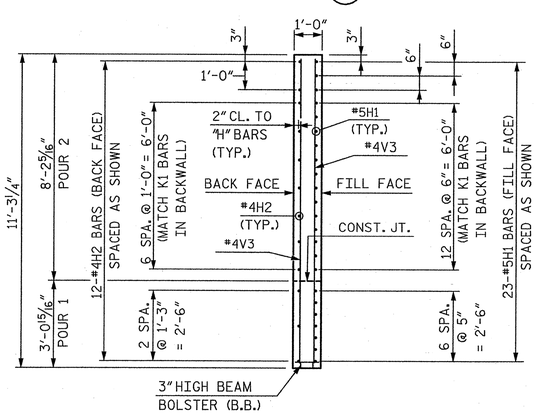

SECTION B-B

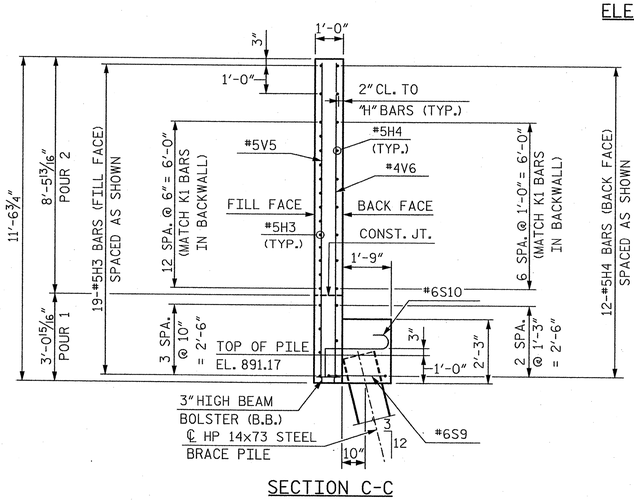

SECTION C-C

PROJECT NO. R-2707B

CLEVELAND COUNTY

STATION: 252+73.29 -L-

SHEET 2 OF 3

STATE OF NORTH CAROLINA
DEPARTMENT OF TRANSPORTATION
RALEIGH

SUBSTRUCTURE

END BENT 2

RIGHT LANE

NORTH CAROLINA PROFESSIONAL SEAL 12916 ENGINEER PAUL J. BARBER 6/25/12

HNTB NORTH CAROLINA, P.C.
NC License No. C-1554
343 E. Six Forks Rd., Suite 200, Raleigh, N.C. 27609

DRAWN BY M. WRIGHT DATE 6/12
CHECKED BY D. HAWKINS DATE 6/12

DWG. NO. 25

REVISIONS						SHEET NO.
NO.	BY	DATE	NO.	BY	DATE	S-125
1			3			TOTAL SHEETS
2			4			266

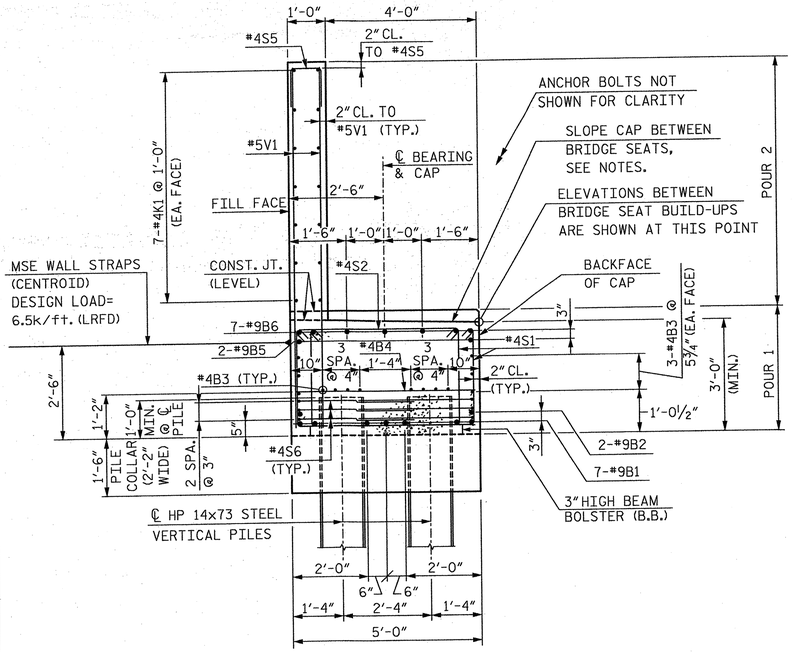

SECTION A-A

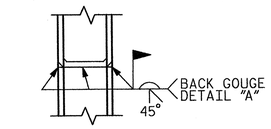

*PILE VERTICAL

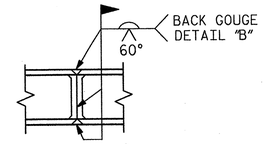

*PILE HORIZONTAL OR VERTICAL

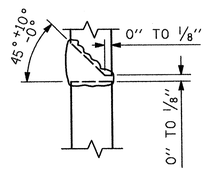

DETAIL "A"

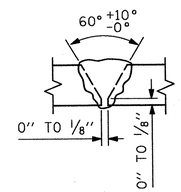

DETAIL "B"

* POSITION OF PILE DURING WELDING.

PILE SPLICE DETAILS

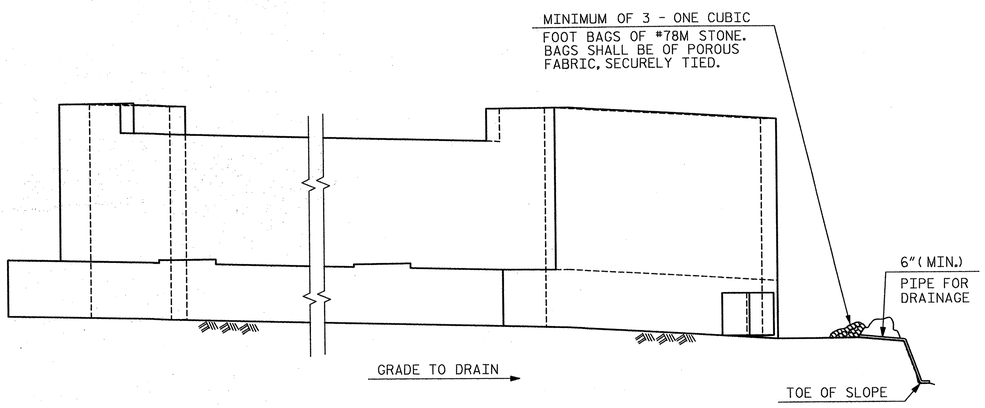

BAGGED STONE AND PIPE SHALL BE PLACED IMMEDIATELY AFTER COMPLETION OF END BENT EXCAVATION. PIPE MAY BE EITHER CONCRETE, CORRUGATED STEEL, CORRUGATED ALUMINUM ALLOY OR CORRUGATED PLASTIC. PERFORATED PIPE WILL NOT BE ALLOWED.

BAGGED STONE SHALL REMAIN IN PLACE UNTIL THE ENGINEER DIRECTS THAT IT BE REMOVED. THE CONTRACTOR SHALL REMOVE AND DISPOSE OF SILT ACCUMULATIONS AT BAGGED STONE WHEN SO DIRECTED BY THE ENGINEER. BAGS SHALL BE REMOVED AND REPLACED WHENEVER THE ENGINEER DETERMINES THAT THEY HAVE DETERIORATED AND LOST THEIR EFFECTIVENESS.

NO SEPARATE PAYMENT WILL BE MADE FOR THIS WORK AND THE ENTIRE COST OF THIS WORK SHALL BE INCLUDED IN THE UNIT CONTRACT PRICE FOR THE SEVERAL PAY ITEMS.

TEMPORARY DRAINAGE AT END BENT 2

BAR TYPES

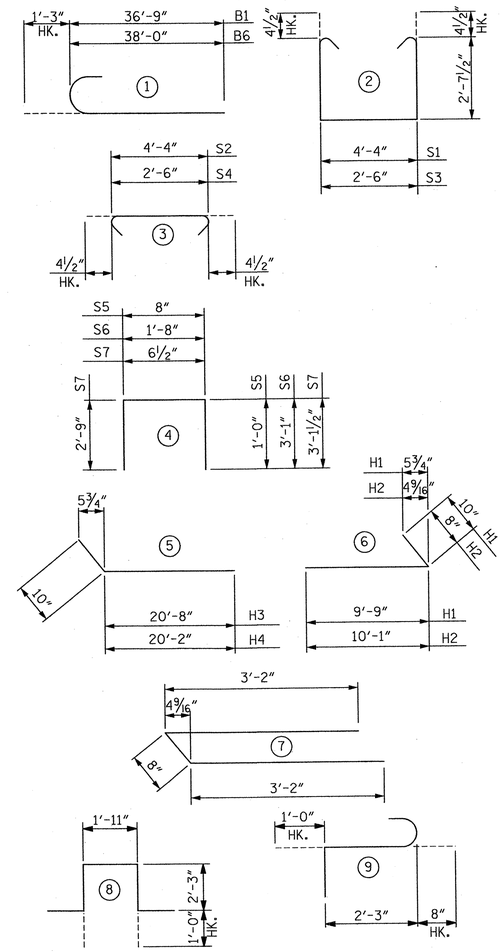

ALL BAR DIMENSIONS ARE OUT TO OUT

BILL OF REINFORCING

END BENT 2

MARK	NO.	SIZE	TYPE	LENGTH	WEIGHT
B1	14	9	1	38'-0"	1,809
B2	4	9	STR.	36'-9"	500
B3	42	4	STR.	24'-0"	673
B4	17	4	STR.	4'-8"	53
B5	4	9	STR.	38'-0"	517
B6	14	9	1	39'-3"	1,868
H1	23	5	6	10'-7"	254
H2	12	4	6	10'-9"	86
H3	19	5	5	21'-6"	426
H4	12	5	5	21'-0"	263
K1	42	4	STR.	24'-0"	673
S1	232	4	2	10'-4"	1,601
S2	232	4	3	5'-1"	788
S3	6	4	2	8'-6"	34
S4	6	4	3	3'-3"	13
S5	60	4	4	2'-8"	107
S6	36	4	4	7'-10"	188
S7	2	4	4	6'-5"	9
S8	2	4	7	7'-0"	9
S9	1	6	8	8'-5"	13
S10	3	6	9	3'-11"	18
V1	120	5	STR.	9'-4"	1,168
V2	10	5	STR.	10'-10"	113
V3	13	4	STR.	10'-10"	94
V4	10	5	STR.	11'-0"	115
V5	40	5	STR.	11'-1"	462
V6	13	4	STR.	11'-1"	96

QUANTITIES

REINFORCING STEEL	LBS.	11,950
CLASS A CONCRETE BREAKDOWN		
POUR 1 - CAP & BOTT. OF WINGS	CU. YDS.	42.1
POUR 2 - TOP OF WINGS & BACKWALL	CU. YDS.	26.0
TOTAL	CU. YDS.	68.1
HP 14x73 STEEL PILES	NO.	13
	FEET	1,105

NOTES:

STIRRUPS IN CAP MAY BE SHIFTED AS NECESSARY TO CLEAR ANCHOR BOLTS.

BACKWALL SHALL BE PLACED BEFORE APPLYING THE EPOXY PROTECTIVE COATING.

THE TOP SURFACE AREAS OF THE END BENT CAP SHALL BE CURED IN ACCORDANCE WITH THE STANDARD SPECIFICATIONS, EXCEPT THAT THE MEMBRANE CURING COMPOUND METHOD SHALL NOT BE USED.

THE TOP SURFACE OF THE END BENT CAP EXCEPT THE BRIDGE SEAT BUILDUPS SHALL BE SLOPED TRANSVERSELY FROM THE FILL FACE TO THE BACK FACE AT THE RATE OF 2%.

PROJECT NO. R-2707B

CLEVELAND COUNTY

STATION: 252+73.29 -L-

SHEET 3 OF 3

NORTH CAROLINA PROFESSIONAL SEAL 12916 ENGINEER PAUL J. BARBER 3/26/14

STATE OF NORTH CAROLINA
DEPARTMENT OF TRANSPORTATION
RALEIGH

SUBSTRUCTURE

END BENT 2

RIGHT LANE

HNTB NORTH CAROLINA, P.C.
NC License No. C-1554
343 E. Six Forks Rd., Suite 200, Raleigh, N.C. 27609

DRAWN BY M. WRIGHT DATE 3/14
CHECKED BY D. HAWKINS DATE 3/14

DWG. NO. 26

REVISIONS						
NO.	BY	DATE	NO.	BY	DATE	
1			3			
2			4			

SHEET NO. S-121

TOTAL SHEETS 266

NOTES:

FOR BERM WIDTHS, SEE GENERAL DRAWING.

SLOPE PROTECTION SHALL CONSIST OF 4" POURED-IN-PLACE CONCRETE PAVING AS SHOWN IN THE DETAILS ON THIS SHEET. CONCRETE SHALL BE CLASS "B". THE CONCRETE SURFACE SHALL BE FLOATED WITH A WOODEN FLOAT AND FINISHED. WELDED WIRE FABRIC REINFORCING SHALL BE 6 X 6 - W1.4 X W1.4, 60" WIDE. SLOPE PROTECTION SHALL BE POURED IN 5' STRIPS AS SHOWN IN THE "POURING DETAIL" WITH 2'-0" LONG #4 BARS PLACED ALONG THE SLOPE BETWEEN STRIPS AT 1'-6" MAXIMUM SPACING. SLOPE PROTECTION MAY BE POURED IN ALTERNATE 4' AND 5' STRIPS AS SHOWN IN THE "OPTIONAL POURING DETAIL" WITH ADJACENT RUNS OF WELDED WIRE FABRIC LAPPING AT LEAST 6". THE COST OF THE WELDED WIRE FABRIC AND #4 BARS, IF USED, SHALL BE INCLUDED IN THE CONTRACT UNIT PRICE BID PER SQUARE YARD FOR SLOPE PROTECTION.

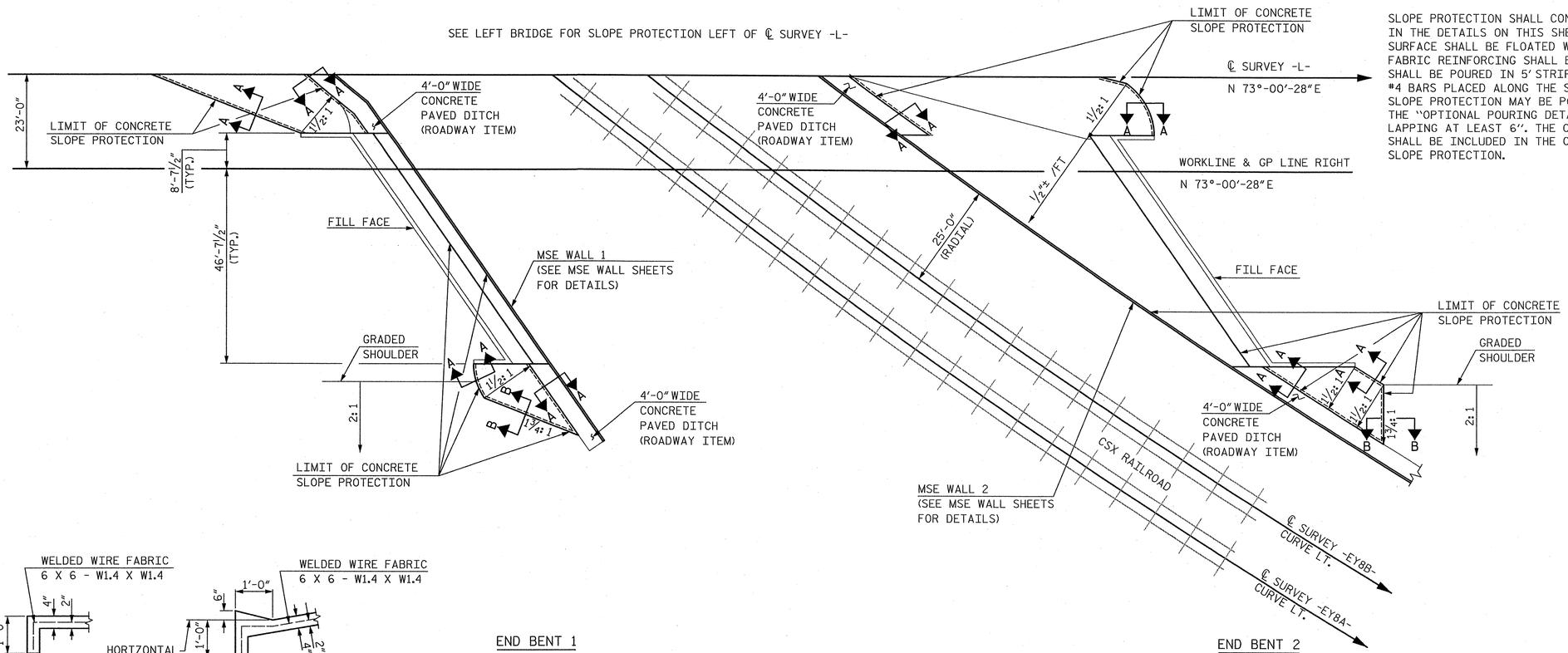

END BENT 1

END BENT 2

PLAN

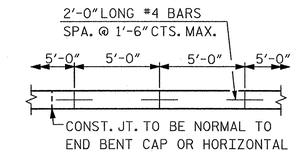

STRIP WIDTHS MAY VARY IN CURVED PORTION.

POURING DETAIL

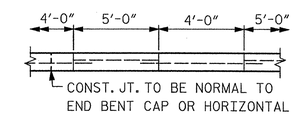

POUR A 4'-0" STRIP FIRST. STRIP WIDTHS MAY VARY IN CURVED PORTION.

OPTIONAL POURING DETAIL

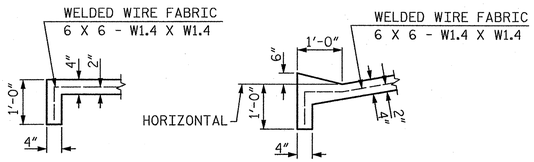

SECTION A-A

SECTION B-B

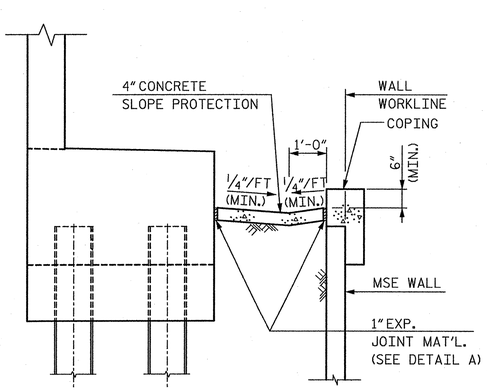

SECTION AT END BENT

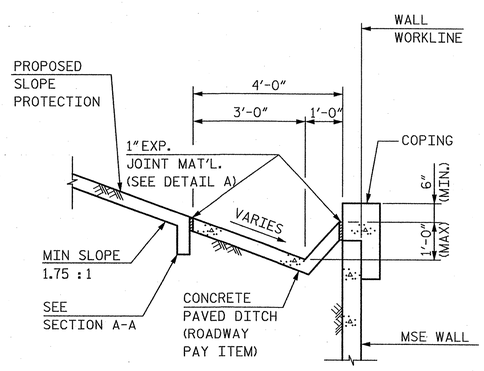

SECTION AT SLOPE PROTECTED FILL SLOPE

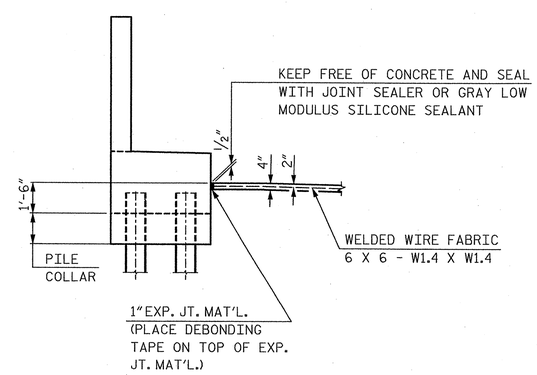

DETAIL A

BRIDGE @ STA. 252+73.29 -L- RIGHT LANE	4 INCH SLOPE PROTECTION	* WELDED WIRE FABRIC 60 INCHES WIDE
	SQUARE YARDS	APPROX. L.F.
END BENT 1	117.4	260.0
END BENT 2	310.8	633.6

* QUANTITY SHOWN IS BASED ON 5' POURS.

PROJECT NO. R-2707B

CLEVELAND COUNTY

STATION: 252+73.29 -L-

NORTH CAROLINA PROFESSIONAL SEAL 12916 ENGINEER PAUL J. BARBER 6/28/12

STATE OF NORTH CAROLINA
DEPARTMENT OF TRANSPORTATION
RALEIGH

SLOPE PROTECTION DETAILS

RIGHT LANE

HNTB NORTH CAROLINA, P.C.
NC License No. C-1554
343 E. Six Forks Rd., Suite 200, Raleigh, N.C. 27609

DRAWN BY J. BAYNE DATE 6/12
CHECKED BY P. BARBER DATE 6/12

DWG. NO. 27

REVISIONS						
NO.	BY	DATE	NO.	BY	DATE	
1			3			
2			4			

SHEET NO. S-122

TOTAL SHEETS 266

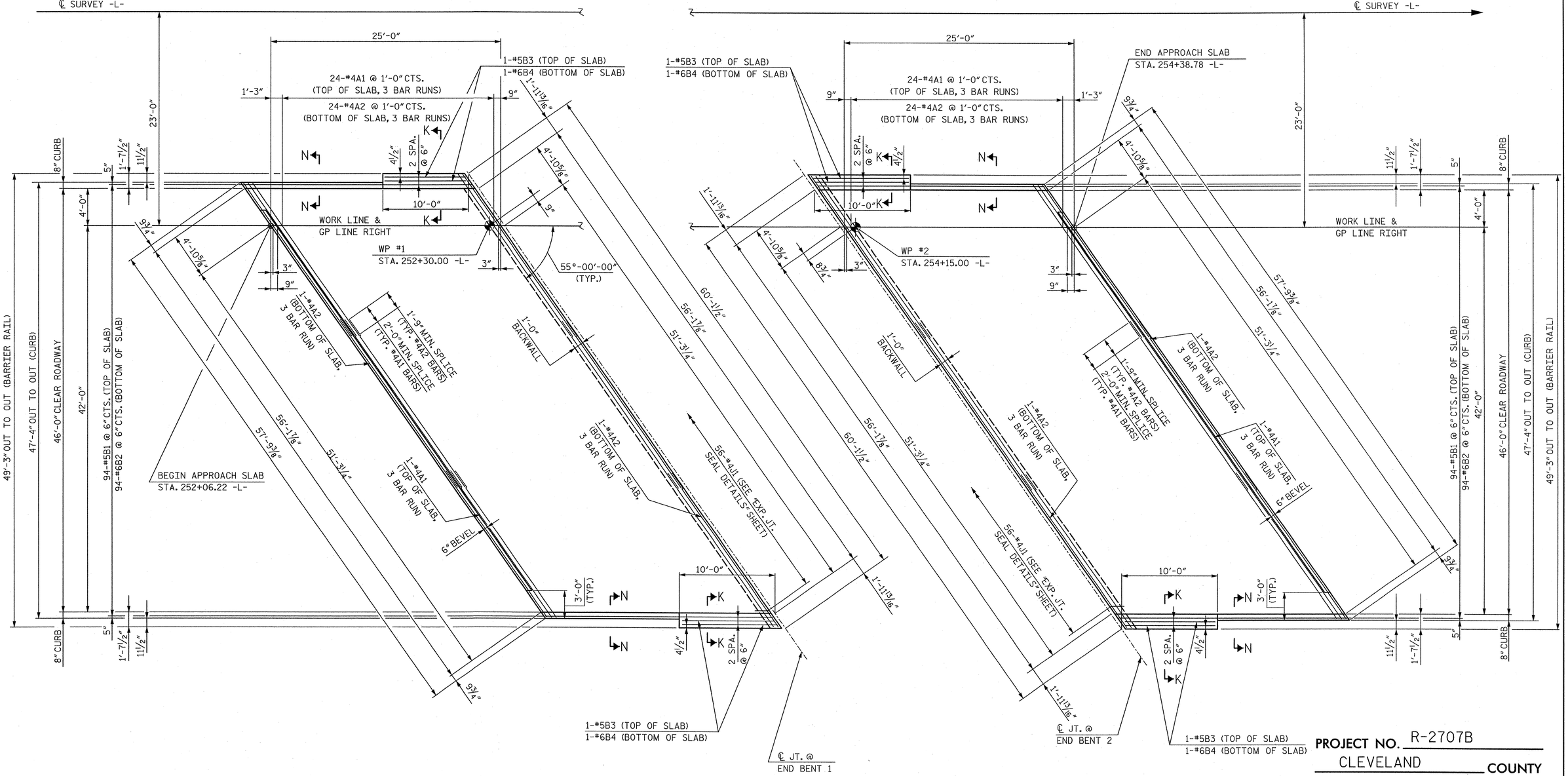

PLAN @ END BENT 1

PLAN @ END BENT 2

PROJECT NO. R-2707B

CLEVELAND **COUNTY**

STATION: 252+73.29 -L-

NOTES:

FOR SECTION K-K AND SECTION N-N, SEE "BRIDGE APPROACH SLAB FOR FLEXIBLE PAVEMENT" SHEET 2 OF 3.

FOR APPROACH SLAB BILL OF MATERIAL, SEE BRIDGE APPROACH SLAB FOR FLEXIBLE PAVEMENT" SHEET 2 OF 3.

FOR BARRIER RAIL REINFORCING STEEL PLACEMENT AND BILL OF MATERIAL, SEE "BRIDGE APPROACH SLAB DETAILS" SHEET 3 OF 3.

FOR STANDARD EXPANSION JOINT SEAL DETAILS, SEE "EXPANSION JOINT SEAL DETAILS" SHEET.

SHEET 1 OF 3

NORTH CAROLINA PROFESSIONAL SEAL 12916 ENGINEER PAUL J. BARBER 6/12/12

STATE OF NORTH CAROLINA
DEPARTMENT OF TRANSPORTATION
RALEIGH

BRIDGE APPROACH SLAB FOR FLEXIBLE PAVEMENT

RIGHT LANE

HNTB

HNTB NORTH CAROLINA, P.C.
NC License No. C-1554
343 E. Six Forks Rd., Suite 200, Raleigh, N.C. 27609

DRAWN BY J. BAYNE DATE 6/12
CHECKED BY K. DICKENS DATE 6/12

DWG. NO. 28

REVISIONS						SHEET NO.
NO.	BY	DATE	NO.	BY	DATE	S-123
1			3			TOTAL SHEETS
2			4			206

NOTES

APPROACH SLAB SHALL NOT BE CONSTRUCTED PRIOR TO COMPLETION OF THE BRIDGE DECK.

AREA BETWEEN THE WINGWALL AND APPROACH SLAB SHALL BE GRADED TO DRAIN THE WATER AWAY FROM THE FILL FACE OF THE BRIDGE AND SHALL BE PAVED. SEE ROADWAY PLANS.

FOR EXPANSION JOINT SEALS, SEE SPECIAL PROVISIONS.

FOR PLAN VIEW OF APPROACH SLABS AT END BENT 1 AND END BENT 2, SEE SHEET 1 OF 3.

BILL OF MATERIAL

APPROACH SLAB AT EB #1

BAR	NO.	SIZE	TYPE	LENGTH	WEIGHT
✳ A1	75	#4	STR	21'-3"	1,065
A2	78	#4	STR	21'-1"	1,099
✳ B1	94	#5	STR	24'-3"	2,378
B2	94	#6	STR	24'-6"	3,459
✳ B3	4	#5	STR	9'-10"	41
B4	4	#6	STR	9'-10"	59
✳ J1	56	#4	1	1'-5"	53
REINFORCING STEEL ✳✳ LBS.					4,617
✳ EPOXY COATED REINFORCING STEEL ✳✳ LBS.					3,537
CLASS AA CONCRETE ✳✳ C. Y.					52.3

APPROACH SLAB AT EB #2

BAR	NO.	SIZE	TYPE	LENGTH	WEIGHT
✳ A1	75	#4	STR	21'-3"	1,065
A2	78	#4	STR	21'-1"	1,099
✳ B1	94	#5	STR	24'-3"	2,378
B2	94	#6	STR	24'-6"	3,459
✳ B3	4	#5	STR	9'-10"	41
B4	4	#6	STR	9'-10"	59
✳ J1	56	#4	1	1'-5"	53
REINFORCING STEEL ✳✳ LBS.					4,617
✳ EPOXY COATED REINFORCING STEEL ✳✳ LBS.					3,537
CLASS AA CONCRETE ✳✳ C. Y.					52.3

BAR TYPE

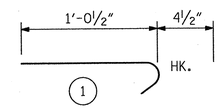

ALL BAR DIMENSIONS ARE OUT TO OUT

✳✳ QUANTITIES FOR BARRIER RAIL ARE NOT INCLUDED. SEE SHEET 3 OF 3.

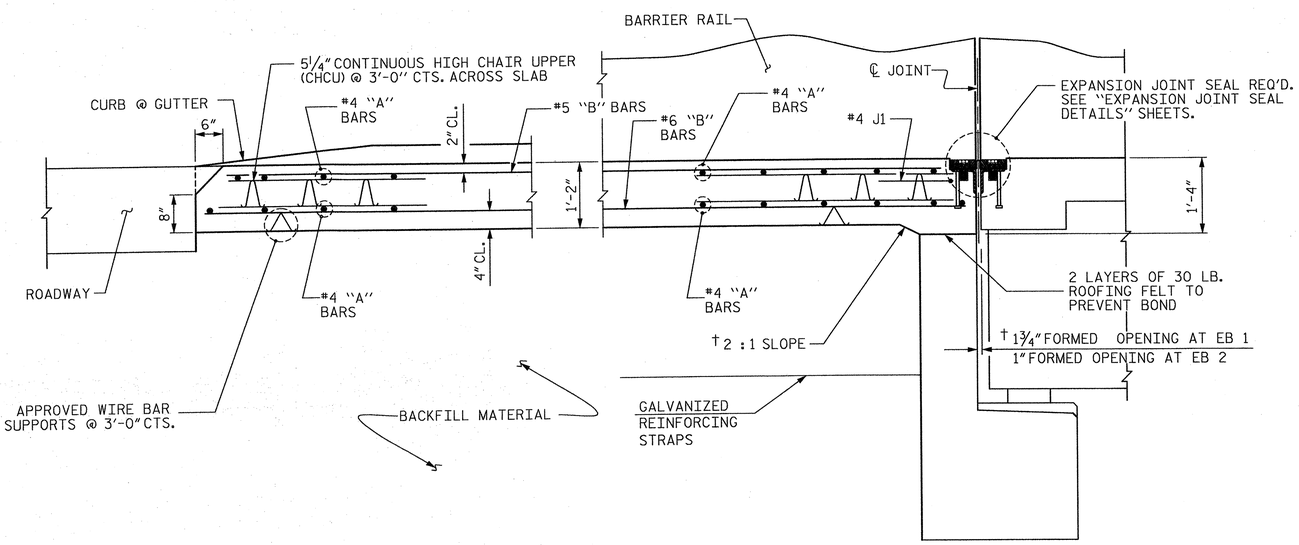

† NORMAL TO END BENT

SECTION THRU SLAB

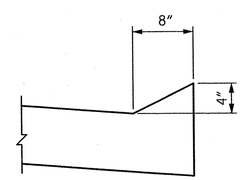

SECTION N-N

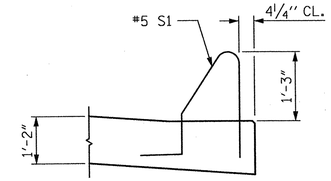

SECTION K-K

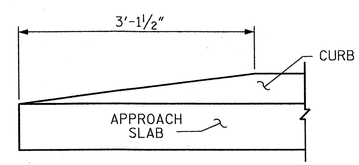

END OF CURB WITHOUT SHOULDER BERM GUTTER

CURB DETAILS

SPLICE LENGTHS		
BAR SIZE	EPOXY COATED	UNCOATED
#4	2'-0"	1'-9"
#5	2'-6"	2'-2"
#6	3'-10"	2'-7"

PROJECT NO. R-2707B

CLEVELAND COUNTY

STATION: 252+73.29 -L-

SHEET 2 OF 3

STATE OF NORTH CAROLINA
DEPARTMENT OF TRANSPORTATION
RALEIGH

BRIDGE APPROACH SLAB FOR FLEXIBLE PAVEMENT

RIGHT LANE

NORTH CAROLINA PROFESSIONAL SEAL 12916 ENGINEER PAUL J. BARBER 3/18/14

ASSEMBLED BY : J. BAYNE	DATE : 6/12		
CHECKED BY : K. DICKENS	DATE : 6/12		
DRAWN BY : EEM 3/95	REV. 5/7/03R	RWW/JTE	
CHECKED BY : VAP 3/95	REV. 5/1/06RR	KMM/GM	
	REV. 10/1/11	MAA/GM	

HNTB NORTH CAROLINA, P.C.
NC License No. C-1554
343 E. Six Forks Rd., Suite 200, Raleigh, N.C. 27609

DRAWN BY J. BAYNE DATE 3/14
CHECKED BY K. DICKENS DATE 3/14

DWG. NO. 29

REVISIONS						SHEET NO.
NO.	BY	DATE	NO.	BY	DATE	S-124
1			3			TOTAL SHEETS
2			4			266

STD. NO. BAS2

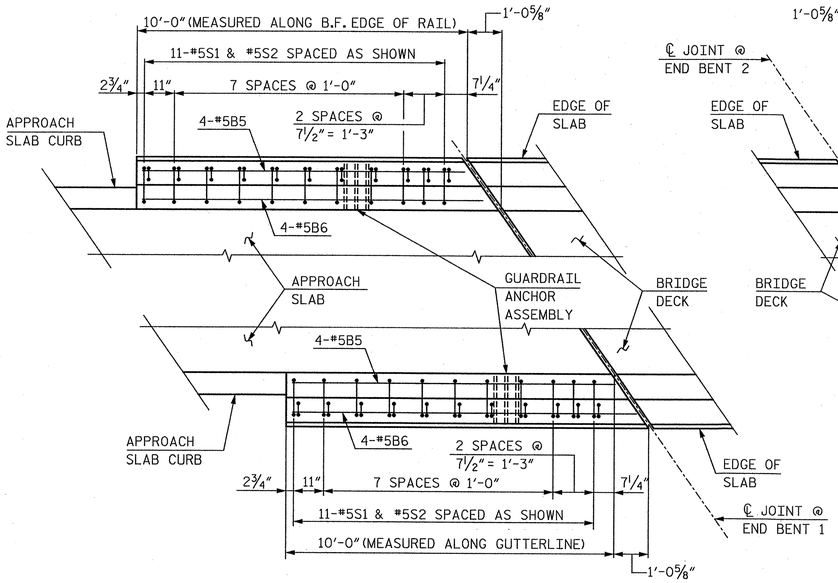

@ END BENT 1

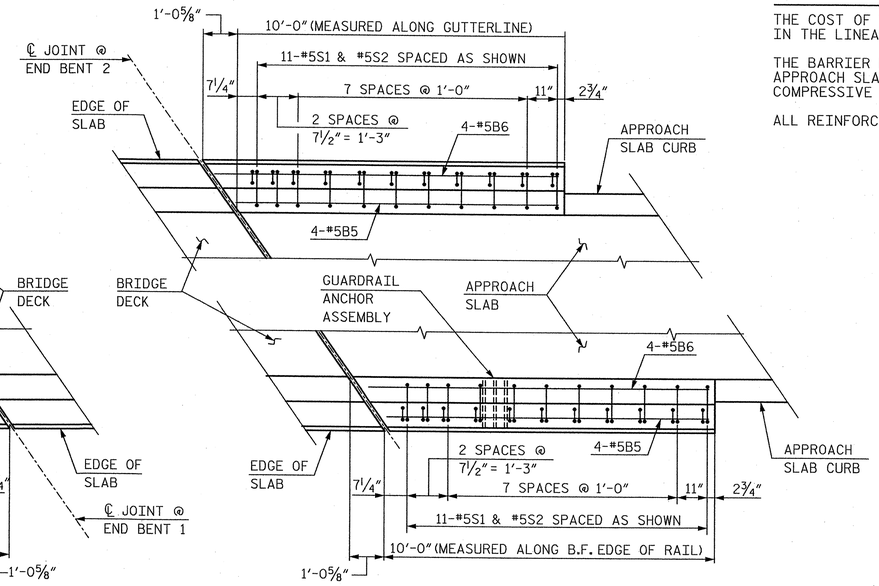

@ END BENT 2

NOTE: SEE "GUARDRAIL ANCHORAGE FOR BARRIER RAIL" SHEET FOR LOCATION OF ANCHORS AND POINTS OF ATTACHMENT.

PLAN - BARRIER RAIL EXTENSION

NOTES

THE COST OF THE BARRIER RAIL ON THE APPROACH SLAB SHALL BE INCLUDED IN THE LINEAR FOOT CONTRACT PRICE BID FOR "CONCRETE BARRIER RAIL".

THE BARRIER RAIL ON EACH APPROACH SLAB SHALL NOT BE CAST UNTIL ALL APPROACH SLAB CONCRETE HAS BEEN CAST AND HAS REACHED A MINIMUM COMPRESSIVE STRENGTH OF 3,000 PSI.

ALL REINFORCING STEEL IN BARRIER RAILS SHALL BE EPOXY COATED.

BAR TYPES

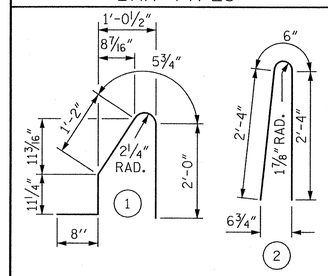

ALL BAR DIMENSIONS ARE OUT TO OUT

BILL OF MATERIAL

BARRIER RAIL ONLY

BAR	NO.	SIZE	TYPE	LENGTH	WEIGHT
✳B5	16	#5	STR	9'-8"	161
✳B6	16	#5	STR	9'-11"	165
✳S1	44	#5	1	5'-3"	241
✳S2	44	#5	2	5'-2"	237
✳EPOXY COATED REINFORCING STEEL				LBS.	804
CLASS AA CONCRETE				C.Y.	4.2
CONCRETE BARRIER RAIL				41.8	LIN. FT.

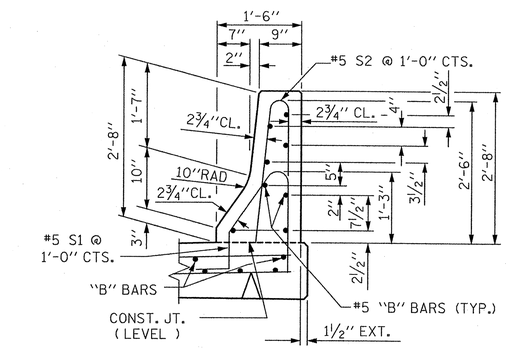

SECTION THRU RAIL

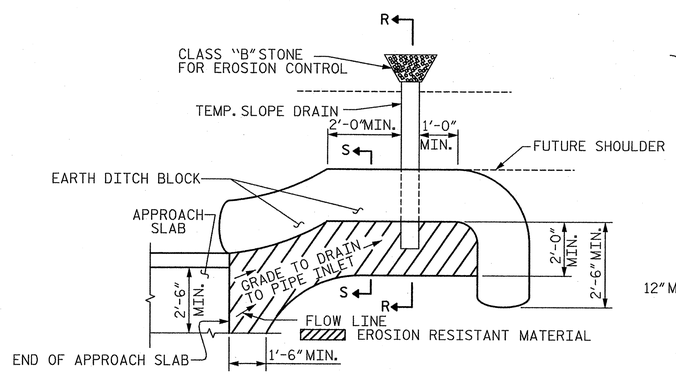

NOTE: IMMEDIATELY AFTER THE CONSTRUCTION OF THE APPROACH SLAB, THE CONTRACTOR SHALL PROVIDE TEMPORARY BERM AND SLOPE DRAIN. CONTRACTOR SHALL GRADE TO PIPE INLET AND PROVIDE EROSION RESISTANT MATERIAL AS SHOWN. THE EROSION RESISTANT MATERIAL SHALL BE EITHER 1) ASPHALT PLANT MIX, TYPE 1 OR TYPE 2, MIN. 2" DEPTH, 2) EROSION CONTROL MAT, OR 3) CONCRETE, AS DIRECTED BY THE ENGINEER. THE SLOPE DRAIN SHALL CONSIST OF A NON-PERFORATED TEMPORARY DRAINAGE PIPE, 12 INCHES IN DIAMETER.

PLAN VIEW

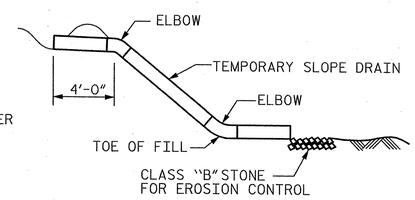

SECTION R-R

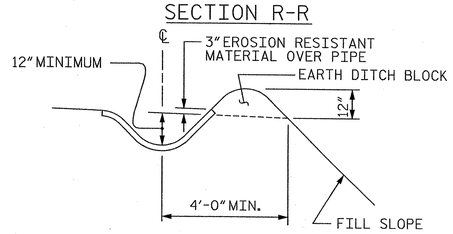

SECTION S-S

TEMPORARY BERM AND SLOPE DRAIN DETAILS

(TO BE USED WHEN SHOULDER BERM GUTTER IS REQUIRED)

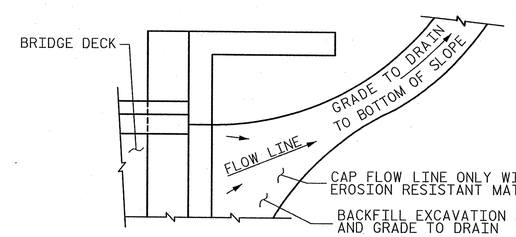

NOTE: IF THE APPROACH SLAB IS NOT CONSTRUCTED IMMEDIATELY AFTER THE BACKFILLING OF THE END BENT EXCAVATION, GRADE TO DRAIN TO THE BOTTOM OF THE SLOPE AND PROVIDE EROSION RESISTANT MATERIAL, SUCH AS FIBERGLASS ROVING OR AS DIRECTED BY THE ENGINEER TO PREVENT SOIL EROSION AND TO PROTECT THE AREA ADJACENT TO THE STRUCTURE. THE CONTRACTOR WILL BE REQUIRED TO REMOVE THESE MATERIALS PRIOR TO CONSTRUCTION OF THE APPROACH SLAB.

TEMPORARY DRAINAGE DETAIL

PROJECT NO. R-2707B

CLEVELAND COUNTY

STATION: 252+73.29 -L-

SHEET 3 OF 3

STATE OF NORTH CAROLINA
DEPARTMENT OF TRANSPORTATION
RALEIGH

STANDARD

BRIDGE APPROACH SLAB DETAILS

RIGHT LANE

NORTH CAROLINA PROFESSIONAL ENGINEER SEAL 12916 PAUL J. BARBER 8/28/12

ASSEMBLED BY : J. BAYNE		DATE : 6/12	
CHECKED BY : K. DICKENS		DATE : 6/12	
DRAWN BY : FCJ	11/88	REV. 5/7/03	RWW/JTE
CHECKED BY : ARB	11/88	REV. 5/1/06RRR	MAA/KMM
		REV. 10/1/11	MAA/GM

HNTB NORTH CAROLINA, P.C.
NC License No. C-1554
343 E. Six Forks Rd., Suite 200, Raleigh, N.C. 27609

DRAWN BY J. BAYNE DATE 6/12
CHECKED BY K. DICKENS DATE 6/12

DWG. NO. 30

REVISIONS

NO.	BY	DATE	NO.	BY	DATE
1			3		
2			4		

SHEET NO. S-125

TOTAL SHEETS 200

STR. NO. BAS4

F.A. PROJECT: NHF-74 (107)

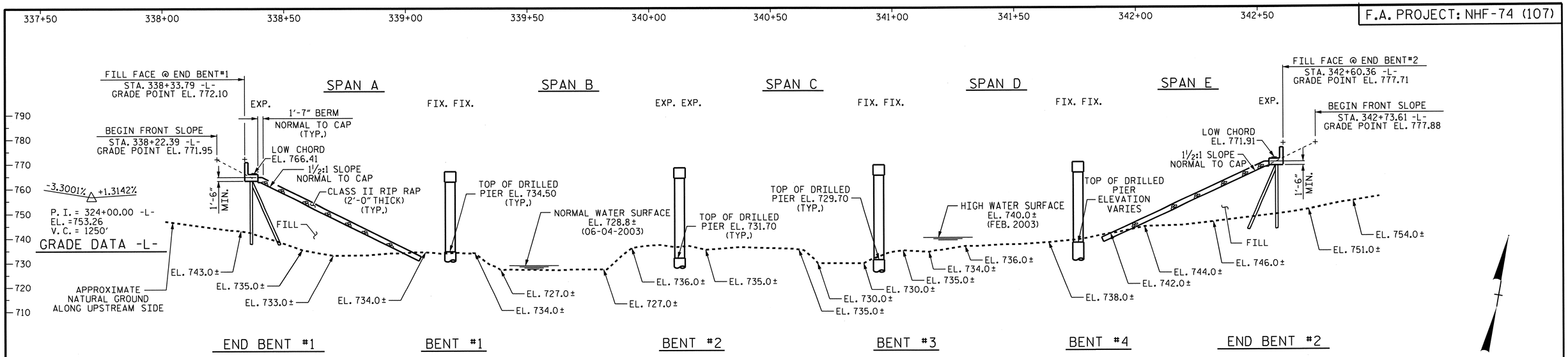

SECTION ALONG CONTROL LINE (LEFT LANE)

(SECTION TAKEN AT RIGHT ANGLES TO BENTS AND END BENTS)
(APPROXIMATE GROUND LINE ELEVATIONS ARE ALONG THE BRIDGE ON THE UPSTREAM SIDE)

HORIZONTAL CURVE DATA

PI. STA. 340+60.60
Δ = 06°-41'-40" (RT)
D = 1°-00'-00"
L = 669.44'
T = 335.10'
R = 5729.58'

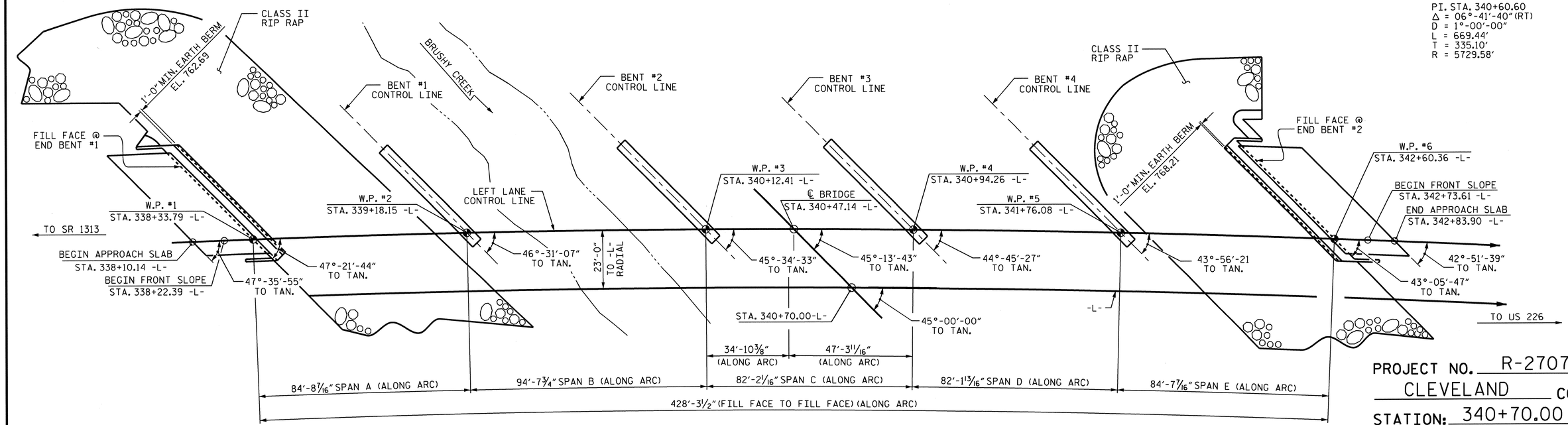

PLAN (LEFT LANE)

(PILES NOT SHOWN IN PLAN VIEW)

I HEREBY CERTIFY THESE PLANS
ARE THE AS-BUILT PLANS

NORTH CAROLINA PROFESSIONAL SEAL 13014 ENGINEER QUANG H. NGUYEN
Quang H. Nguyen 6-27-13

NORTH CAROLINA PROFESSIONAL SEAL 15825 ENGINEER BRUCE D. KLAPPENBACH
6-27-2013

PROJECT NO. R-2707B
CLEVELAND COUNTY
STATION: 340+70.00 -L-

SHEET 1 OF 4 BRIDGE No. 461

STATE OF NORTH CAROLINA
DEPARTMENT OF TRANSPORTATION
RALEIGH

GENERAL DRAWING
FOR BRIDGE ON US 74
OVER BRUSHY CREEK
BETWEEN SR 1313
AND US 226
(LEFT LANE)

REVISIONS								SHEET NO.
NO.	BY:	DATE:	NO.	BY:	DATE:			S-126
1			3					TOTAL SHEETS
2			4					266

DESIGN ENGINEER OF RECORD: B. A. DUKE DATE: 5-13
DRAWN BY: H. T. BARBOUR DATE: 03-15-12
CHECKED BY: D. A. GLADDEN DATE: 03-13

24-JUN-2013 12:23
K:\Structures\Plans\Bolley\STR5and6\TBARBOUR\Microstation\LEFT LANE\misc\R-2707B_SD_GD.dgn
tbarbour

STR #5

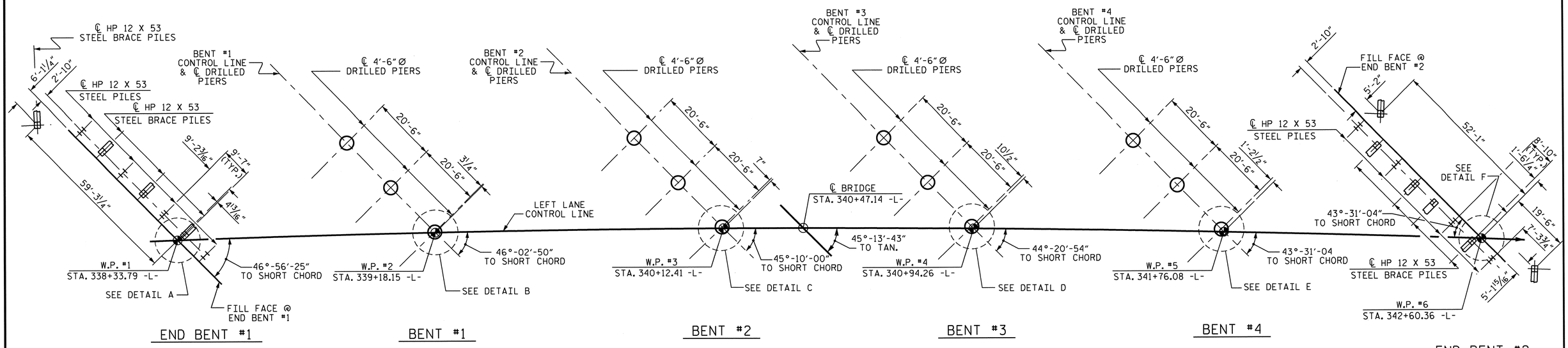

FOUNDATION LAYOUT

DIMENSIONS LOCATING PILES ARE TO THE PILE CENTERLINE AT THE BOTTOM OF CAP

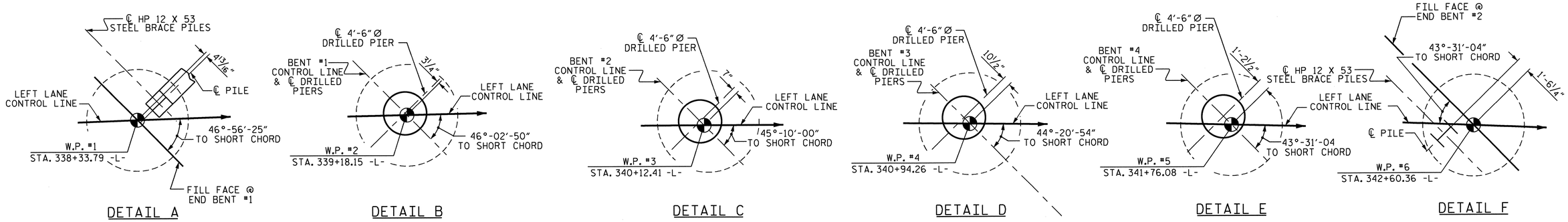

NOTES

FOR DRILLED PIERS, SEE SECTION 411 OF THE STANDARD SPECIFICATIONS.

DRILLED PIERS AT BENT NO. 1 THROUGH BENT NO. 4 ARE DESIGNED FOR A FACTORED RESISTANCE OF 540 TONS PER PIER. CHECK FIELD CONDITIONS FOR THE REQUIRED TIP RESISTANCE OF 35 TSF.

INSTALL DRILLED PIERS AT BENT NO. 1 THAT EXTEND TO AN ELEVATION NO HIGHER THAN 708 FT. AND SATISFY THE REQUIRED TIP RESISTANCE.

INSTALL DRILLED PIERS AT BENT NO. 2 THAT EXTEND TO AN ELEVATION NO HIGHER THAN 701 FT. AND SATISFY THE REQUIRED TIP RESISTANCE.

INSTALL DRILLED PIERS AT BENT NO. 3 THAT EXTEND TO AN ELEVATION NO HIGHER THAN 700 FT. AND SATISFY THE REQUIRED TIP RESISTANCE.

INSTALL DRILLED PIERS AT BENT NO. 4 THAT EXTEND TO AN ELEVATION NO HIGHER THAN 713 FT. AND SATISFY THE REQUIRED TIP RESISTANCE.

THE SCOUR CRITICAL ELEVATION FOR BENT NO. 1 THROUGH BENT NO. 4 IS ELEVATION 717 FT. (BENT 1), 714 FT. (BENT 2), 712 FT. (BENT 3) AND 720 FT. (BENT 4). SCOUR CRITICAL ELEVATIONS ARE USED TO MONITOR POSSIBLE SCOUR PROBLEMS DURING THE LIFE OF THE STRUCTURE.

SPT IS REQUIRED FOR DRILLED PIERS AT BENT NO. 1 THROUGH BENT NO. 4. FOR SPT TESTING, SEE SECTION 411 OF THE STANDARD SPECIFICATIONS.

SID INSPECTIONS ARE REQUIRED FOR DRILLED PIERS AT BENT NO. 1 THROUGH BENT NO. 4. FOR SID INSPECTIONS, SEE SECTION 411 OF THE STANDARD SPECIFICATIONS.

CSL TUBES ARE REQUIRED AND CSL TESTING MAY BE REQUIRED FOR DRILLED PIERS. THE ENGINEER WILL DETERMINE THE NEED FOR CSL TESTING. FOR CSL TESTING, SEE SECTION 411 OF THE STANDARD SPECIFICATIONS.

PERMANENT STEEL CASINGS MAY BE REQUIRED FOR DRILLED PIERS AT BENT NO. 1 AND BENT NO. 2. IF REQUIRED, DO NOT EXTEND PERMANENT CASINGS BELOW ELEVATION 718 FT. (BENT NO. 1 AND BENT NO. 2).

FOR PILES, SEE SECTION 450 OF THE STANDARD SPECIFICATIONS.

PILES AT END BENT NO. 1 AND END BENT NO. 2 ARE DESIGNED FOR A FACTORED RESISTANCE OF 110 TONS PER PILE.

DRIVE PILES AT END BENT NO. 1 AND END BENT NO. 2 TO A REQUIRED DRIVING RESISTANCE OF 185 TONS PER PILE.

PROJECT NO. R-2707B
CLEVELAND COUNTY
STATION: 340+70.00 -L-

SHEET 2 OF 4

STATE OF NORTH CAROLINA
DEPARTMENT OF TRANSPORTATION
RALEIGH

GENERAL DRAWING FOR BRIDGE ON US 74 OVER BRUSHY CREEK BETWEEN SR 1313 AND US 226 (LEFT LANE)

NORTH CAROLINA PROFESSIONAL SEAL 15825 ENGINEER D. KL APPENZELLER
6-27-2013

REVISIONS						SHEET NO.
NO.	BY:	DATE:	NO.	BY:	DATE:	S-127
1			3			TOTAL SHEETS
2			4			266

DESIGN ENGINEER OF RECORD: B. A. DUKE	DATE : 5-13	
DRAWN BY : H. T. BARBOUR	DATE : 03-21-12	
CHECKED BY : D. A. GLADDEN	DATE : 03-13	

25-JUN-2013 10:20
K:\Structures\Plans\Bailey\STR5and6\TBARBOUR\Microstation\LEFT LANE\misc\R-2707B_SD_GD.dgn
tbarbour

STR #5

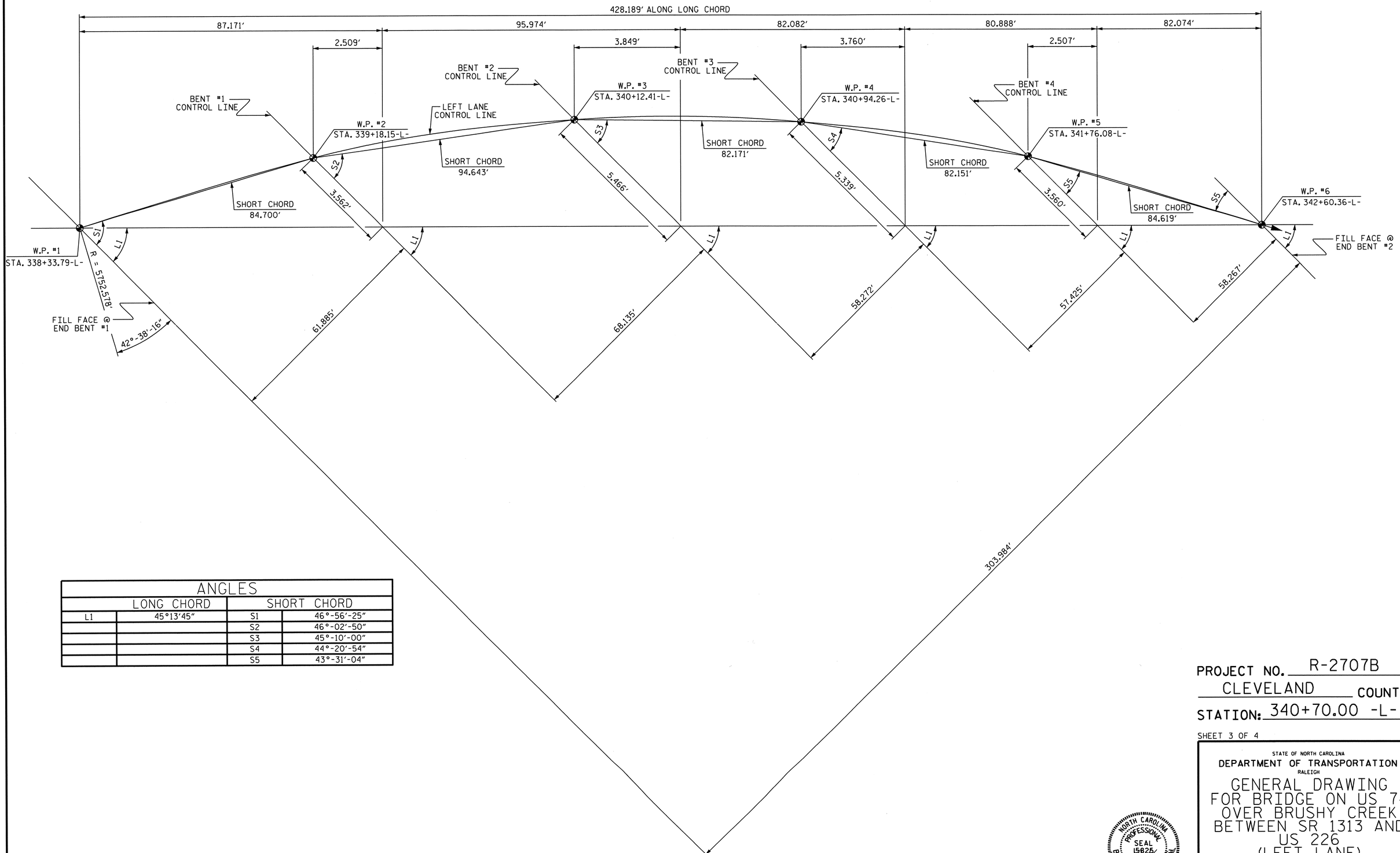

ANGLES			
LONG CHORD		SHORT CHORD	
L1	45°13'45"	S1	46°-56'-25"
		S2	46°-02'-50"
		S3	45°-10'-00"
		S4	44°-20'-54"
		S5	43°-31'-04"

LONG CHORD LAYOUT

ALL BENTS ARE PARALLEL

PROJECT NO. R-2707B

CLEVELAND COUNTY

STATION: 340+70.00 -L-

SHEET 3 OF 4

STATE OF NORTH CAROLINA
DEPARTMENT OF TRANSPORTATION
RALEIGH

GENERAL DRAWING FOR BRIDGE ON US 74 OVER BRUSHY CREEK BETWEEN SR 1313 AND US 226 (LEFT LANE)

NORTH CAROLINA PROFESSIONAL SEAL 15825 ENGINEER D. KLAPPENBACH
6-27-2013

REVISIONS						SHEET NO. S-128
NO.	BY:	DATE:	NO.	BY:	DATE:	TOTAL SHEETS 266
1			3			
2			4			

DESIGN ENGINEER OF RECORD: B. A. DUKE DATE : 5-13

DRAWN BY : H. T. BARBOUR DATE : 05-10-12

CHECKED BY : D. A. GLADDEN DATE : 03-13

14-MAY-2013 08:57
K:\Structures\Plans\Bolley\STR5and6\TBARBOUR\Microstation\LEFT LANE\misc\R-2707B_SD_GD.dgn
tbarbour

STR #5

NCDOS

BENCHMARK #16 : 8" NAIL IN BASE OF 24" Ø RED OAK TREE; STA. 342+82.56-L-, 228.27' RT. EL.735.980

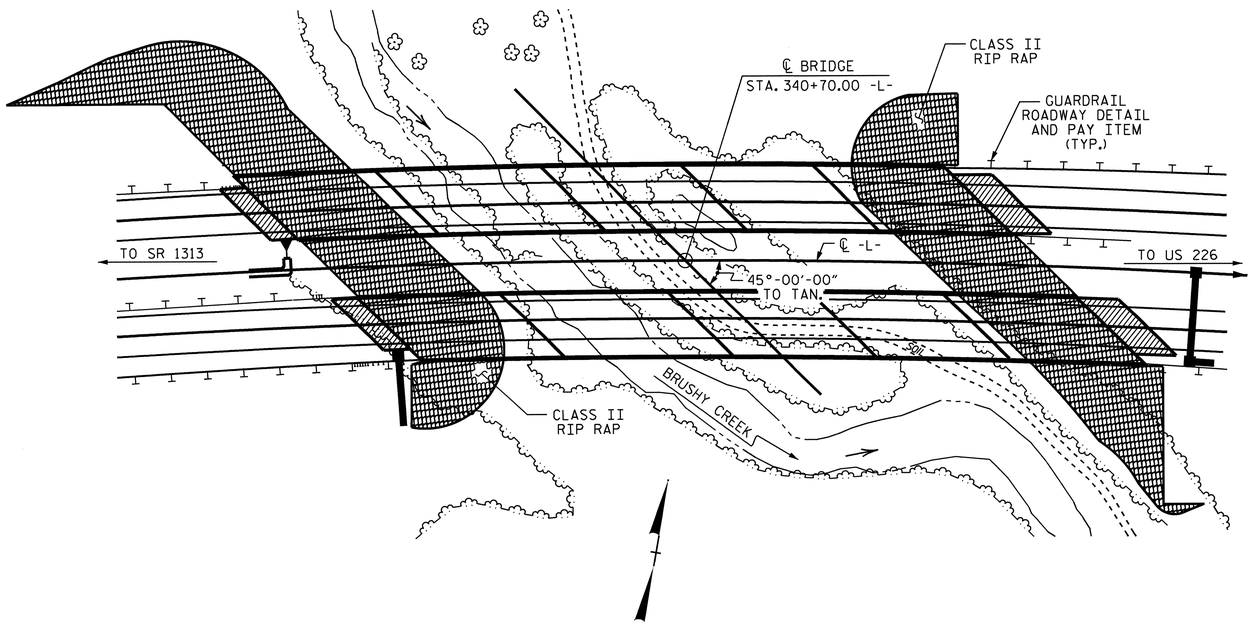

NOTE: FOR UTILITY INFORMATION, SEE UTILITY PLANS AND SPECIAL PROVISIONS.

LOCATION SKETCH

NOTES

ASSUMED LIVE LOAD = HL 93 OR ALTERNATE LOADING.

FOR OTHER DESIGN DATA AND GENERAL NOTES, SEE SHEET SN.

FOR EROSION CONTROL MEASURES SEE EROSION CONTROL PLANS.

THIS BRIDGE HAS BEEN DESIGNED IN ACCORDANCE WITH THE AASHTO LRFD BRIDGE DESIGN SPECIFICATIONS.

REMOVABLE FORMS MAY BE USED IN LIEU OF METAL STAY-IN-PLACE FORMS IN ACCORDANCE WITH ARTICLE 420-3 OF THE STANDARD SPECIFICATIONS.

THIS STRUCTURE HAS BEEN DESIGNED IN ACCORDANCE WITH "HEC 18, EVALUATING SCOUR AT BRIDGES".

THE CONTRACTOR SHALL PROVIDE INDEPENDENT ASSURANCE SAMPLES OF REINFORCING STEEL AS FOLLOWS: FOR PROJECTS REQUIRING UP TO 400 TONS OF REINFORCING STEEL, ONE 30 INCH SAMPLE OF EACH SIZE BAR USED, AND FOR PROJECTS REQUIRING OVER 400 TONS OF REINFORCING STEEL, TWO 30 INCH SAMPLES OF EACH SIZE BAR USED. THE BARS FROM WHICH THE SAMPLES ARE TAKEN MUST THEN BE SPLICED WITH REPLACEMENT BARS OF THE SIZE AND LENGTH OF THE SAMPLE, PLUS A MINIMUM LAP SPLICE OF THIRTY BAR DIAMETERS. PAYMENT FOR THE SAMPLES OF REINFORCING STEEL SHALL BE CONSIDERED INCIDENTAL TO VARIOUS PAY ITEMS.

THE LOCATION OF THE CONSTRUCTION JOINT IN THE DRILLED PIERS IS BASED ON AN APPROXIMATE GROUND LINE ELEVATION. IF THE CONSTRUCTION JOINT IS ABOVE THE ACTUAL GROUND ELEVATION, THE CONTRACTOR SHALL PLACE THE CONSTRUCTION JOINT 1 FT. BELOW THE GROUND LINE.

THE USE OF NEEDLE BEAMS TO SUPPORT THE DECK SLAB WILL ONLY BE ALLOWED IN THE ACUTE CORNERS OF THE SLAB.

FOR SUBMITTAL OF WORKING DRAWINGS, SEE SPECIAL PROVISIONS.

FOR FALSEWORK AND FORMWORK, SEE SPECIAL PROVISIONS.

FOR CRANE SAFETY, SEE SPECIAL PROVISIONS.

FOR GROUT FOR STRUCTURES, SEE SPECIAL PROVISIONS.

THIS BRIDGE IS LOCATED IN SEISMIC ZONE 1.

THE CLASS AA CONCRETE IN THE BRIDGE DECK SHALL CONTAIN FLY ASH OR GROUND GRANULATED BLAST FURNACE SLAG AT THE SUBSTITUTION RATE SPECIFIED IN ARTICLE 1024-1 AND IN ACCORDANCE WITH ARTICLES 1024-5 AND 1024-6 OF THE STANDARD SPECIFICATIONS. NO PAYMENT WILL BE MADE FOR THIS SUBSTITUTION AS IT IS CONSIDERED INCIDENTAL TO THE COST OF THE REINFORCED CONCRETE DECK SLAB.

FOR PLACING LOAD ON STRUCTURES, SEE SPECIAL PROVISIONS.

HYDRAULIC DATA

DESIGN DISCHARGE	= 4700 C.F.S.
FREQUENCY OF DESIGN FLOOD	= 50 YR.
DESIGN HIGH WATER ELEVATION	= 741.100
DRAINAGE AREA	= 25.5 SQ. MI.
BASIC DISCHARGE (Q100)	= 5600 C.F.S.
BASIC HIGH WATER ELEVATION	= 742.100

OVERTOPPING FLOOD DATA

OVERTOPPING DISCHARGE	= 8200+ C.F.S.
FREQUENCY OF OVERTOPPING FLOOD	= 500 YR. +
OVERTOPPING FLOOD ELEVATION	= 778.700

TOTAL BILL OF MATERIAL

	4'-6" Ø DRILLED PIERS IN SOIL	4'-6" Ø DRILLED PIERS NOT IN SOIL	PERMANENT STEEL CASING FOR 4'-6" Ø DRILLED PIER	SID INSPECTIONS	SPT TESTING	CSL TESTING	REINFORCED CONCRETE DECK SLAB	GROOVING BRIDGE FLOORS	CLASS A CONCRETE	BRIDGE APPROACH SLABS
	LIN. FT.	LIN. FT.	LIN. FT.	EA.	EA.	EA.	SQ. FT.	SQ. FT.	CU. YDS.	LUMP SUM
SUPERSTRUCTURE							17500	16400		LUMP SUM
END BENT NO. 1									52.5	
BENT NO. 1	51.00	28.50	49.50	3	3				85.5	
BENT NO. 2	51.60	40.50	41.10	3	3				91.1	
BENT NO. 3	56.10	33.00		3	3				95.4	
BENT NO. 4	55.95	9.00		3	3				90.0	
END BENT NO. 2									54.5	
TOTAL	214.65	111.00	90.6	12	12	4	17500	16400	469.0	LUMP SUM

TOTAL BILL OF MATERIAL

	REINFORCING STEEL	SPIRAL COLUMN REINFORCING STEEL	54" PRESTRESSED CONCRETE GIRDERS		HP 12 X 53 STEEL PILES		CONCRETE BARRIER RAIL	RIP RAP CLASS II (2'- 0" THICK)	GEOTEXTILE FOR DRAINAGE	ELASTOMERIC BEARINGS	EXPANSION JOINT SEALS	APPLICATION OF BRIDGE COATING *
	LBS.	LBS.	NO.	LIN. FT.	NO.	LIN. FT.	LIN. FT.	TONS	SQ. YDS.	LUMP SUM	LUMP SUM	LUMP SUM
SUPERSTRUCTURE			20	1671.25			891.47			LUMP SUM	LUMP SUM	LUMP SUM
END BENT NO. 1	8951				8	325		1295	1438			
BENT NO. 1	25192	4907										
BENT NO. 2	27559	5635										
BENT NO. 3	28156	5833										
BENT NO. 4	24737	4792										
END BENT NO. 2	9863				10	300		810	900			
TOTAL	124458	21167	20	1671.25	18	625	891.47	2105	2338	LUMP SUM	LUMP SUM	LUMP SUM

* APPROXIMATE SURFACE AREA TO BE PAINTED = 7029 SF

PROJECT NO. R-2707B
CLEVELAND COUNTY
STATION: 340+70.00 -L-

SHEET 4 OF 4

STATE OF NORTH CAROLINA
DEPARTMENT OF TRANSPORTATION
RALEIGH

GENERAL DRAWING FOR BRIDGE ON US 74 OVER BRUSHY CREEK BETWEEN SR 1313 AND US 226 (LEFT LANE)

NORTH CAROLINA PROFESSIONAL SEAL 15825 BRIDGE ENGINEER D. K. LAPPENBACH 3-5-2014

REVISIONS						SHEET NO.
NO.	BY:	DATE:	NO.	BY:	DATE:	S-129
1			3			TOTAL SHEETS
2			4			266

DRAWN BY : H. T. BARBOUR DATE : 03-15-12
CHECKED BY : D. A. GLADDEN DATE : 03-13

05-MAR-2014 15:46
R:\Structures\Plans\Bailey\STR5and6\TBARBOUR\Microstation\LEFT LANE\misc\R-2707B_SD_GD.dgn
bklappenbach

STR #5

LOAD AND RESISTANCE FACTOR RATING (LRFR) SUMMARY FOR PRESTRESSED CONCRETE GIRDERS

LEVEL		VEHICLE	WEIGHT (W) (TONS)	CONTROLLING LOAD RATING (#)	MINIMUM RATING FACTORS (RF)	TONS = W X RF	STRENGTH I LIMIT STATE											SERVICE III LIMIT STATE						COMMENT NUMBER
								MOMENT					SHEAR						MOMENT					
							LIVELOAD FACTORS	DISTRIBUTION FACTORS (DF)	RATING FACTOR	SPAN	GIRDER LOCATION	DISTANCE FROM LEFT END OF SPAN (ft)	DISTRIBUTION FACTORS (DF)	RATING FACTOR	SPAN	GIRDER LOCATION	DISTANCE FROM LEFT END OF SPAN (ft)	LIVELOAD FACTORS	DISTRIBUTION FACTORS (DF)	RATING FACTOR	SPAN	GIRDER LOCATION	DISTANCE FROM LEFT END OF SPAN (ft)	
DESIGN LOAD RATING		HL-93(Inv)	N/A	1	1.09	--	1.75	0.83	1.67	C	ER	40.099	1.208	2.31	C	I	32.015	0.80	1.203	1.09	B	I	46.250	
		HL-93(Opr)	N/A	--	2.16	--	1.35	0.83	2.16	C	ER	40.099	1.208	3.00	C	I	32.015	N/A	--	--	--	--	--	
		HS-20(Inv)	36.000	2	1.47	52.889	1.75	0.83	2.21	C	ER	40.099	1.208	2.77	C	I	32.015	0.80	0.782	1.47	C	I	40.019	
		HS-20(Opr)	36.000	--	2.87	103.353	1.35	0.83	2.87	C	ER	40.099	1.208	3.60	C	I	32.015	N/A	--	--	--	--	--	
LEGAL LOAD RATING	SV	SNSH	13.500	--	3.38	45.561	1.4	0.83	6.36	C	ER	40.099	1.208	7.88	C	I	32.015	0.80	0.782	3.37	C	I	40.019	
		SNGARBS2	20.000	--	2.49	49.796	1.4	0.83	4.69	C	ER	40.099	1.208	5.72	C	I	32.015	0.80	0.782	2.49	C	I	40.019	
		SNAGRIS2	22.000	--	2.35	51.643	1.4	0.83	4.42	C	ER	40.099	1.208	5.35	C	I	32.015	0.80	0.782	2.35	C	I	40.019	
		SNCOTTS3	27.250	--	1.68	45.745	1.4	0.83	3.16	C	ER	40.099	1.208	3.94	C	I	32.015	0.80	0.782	1.68	C	I	40.019	
		SNAGGRS4	34.925	--	1.39	48.657	1.4	0.83	2.63	C	ER	40.099	1.208	3.35	C	I	32.015	0.80	0.782	1.39	C	I	40.019	
		SNS5A	35.550	--	1.36	48.456	1.4	0.83	2.57	C	ER	40.099	1.208	3.44	C	I	32.015	0.80	0.782	1.36	C	I	40.019	
		SNS6A	39.950	--	1.25	49.801	1.4	0.83	2.35	C	ER	40.099	1.208	3.18	C	I	32.015	0.80	0.782	1.25	C	I	40.019	
		SNS7B	42.000	--	1.19	49.853	1.4	0.83	2.24	C	ER	40.099	1.208	3.17	C	I	32.015	0.80	0.782	1.19	C	I	40.019	
	TTST	TNAGRIT3	33.000	--	1.52	50.125	1.4	0.83	2.86	C	ER	40.099	1.208	3.75	C	I	32.015	0.80	0.782	1.52	C	I	40.019	
		TNT4A	33.075	--	1.53	50.424	1.4	0.83	2.87	C	ER	40.099	1.208	3.62	C	I	32.015	0.80	0.782	1.52	C	I	40.019	
		TNT6A	41.600	--	1.24	51.696	1.4	0.83	2.34	C	ER	40.099	1.208	3.46	C	I	32.015	0.80	0.782	1.24	C	I	40.019	
		TNT7A	42.000	--	1.25	52.368	1.4	0.83	2.35	C	ER	40.099	1.208	3.38	C	I	32.015	0.80	0.782	1.25	C	I	40.019	
		TNT7B	42.000	--	1.29	53.966	1.4	0.83	2.42	C	ER	40.099	1.208	3.06	C	I	32.015	0.80	0.782	1.28	C	I	40.019	
		TNAGRIT4	43.000	--	1.23	52.720	1.4	0.83	2.31	C	ER	40.099	1.208	2.95	C	I	32.015	0.80	0.782	1.23	C	I	40.019	
		TNAGT5A	45.000	--	1.16	52.099	1.4	0.83	2.18	C	ER	40.099	1.208	2.99	C	I	32.015	0.80	0.782	1.16	C	I	40.019	
		TNAGT5B	45.000	3	1.15	51.539	1.4	0.83	2.16	C	ER	40.099	1.208	2.80	C	I	32.015	0.80	0.782	1.15	C	I	40.019	

LOAD FACTORS:

DESIGN LOAD RATING FACTORS	LIMIT STATE	γ_{DC}	γ_{DW}
	STRENGTH I	1.25	1.50
	SERVICE III	1.00	1.00

NOTES:

MINIMUM RATING FACTORS ARE BASED ON THE STRENGTH I AND SERVICE III LIMIT STATES.

ALLOWABLE STRESSES FOR SERVICE III LIMIT STATE ARE AS REQUIRED FOR DESIGN.

COMMENTS:

1.
2.
3.
4.

(#) CONTROLLING LOAD RATING

(1) DESIGN LOAD RATING (HL-93)
(2) DESIGN LOAD RATING (HS-20)
(3) LEGAL LOAD RATING **

** SEE CHART FOR VEHICLE TYPE

GIRDER LOCATION

I - INTERIOR GIRDER
EL - EXTERIOR LEFT GIRDER
ER - EXTERIOR RIGHT GIRDER

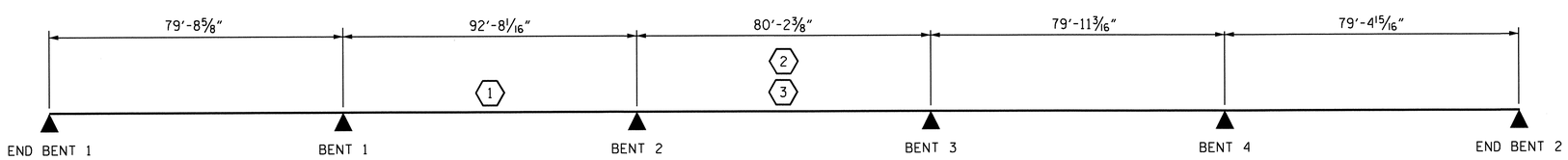

LRFR SUMMARY

PROJECT NO. R-2707B
CLEVELAND COUNTY
STATION: 340+70.00 -L-

STATE OF NORTH CAROLINA
DEPARTMENT OF TRANSPORTATION
RALEIGH

LRFR SUMMARY FOR PRESTRESSED CONCRETE GIRDERS
(NON-INTERSTATE TRAFFIC)
(LEFT LANE)

NORTH CAROLINA PROFESSIONAL SEAL 15828 ENGINEER BRUCE O. KLAPPENBACH
6-27-2013

REVISIONS						SHEET NO.
NO.	BY:	DATE:	NO.	BY:	DATE:	S-130
1			3			TOTAL SHEETS
2			4			266

STD. NO. LRFR1

ASSEMBLED BY : B. A. DUKE DATE : 6-25-13
CHECKED BY : S. T. CHAMPION DATE : 6-27-13
DRAWN BY : MAA 1/08
CHECKED BY : GM/DI 2/08
REV. 11/12/08RR MAA/GM
REV. 10/1/11 MAA/GM
DESIGN ENGINEER OF RECORD: B. A. DUKE DATE : 6-27-13

27-JUN-2013 12:56
R:\Structures\Plans\Bailey\STR5and6\baduke\Microstation\R-2707B_SD_LRFR.dgn
bklappenbach

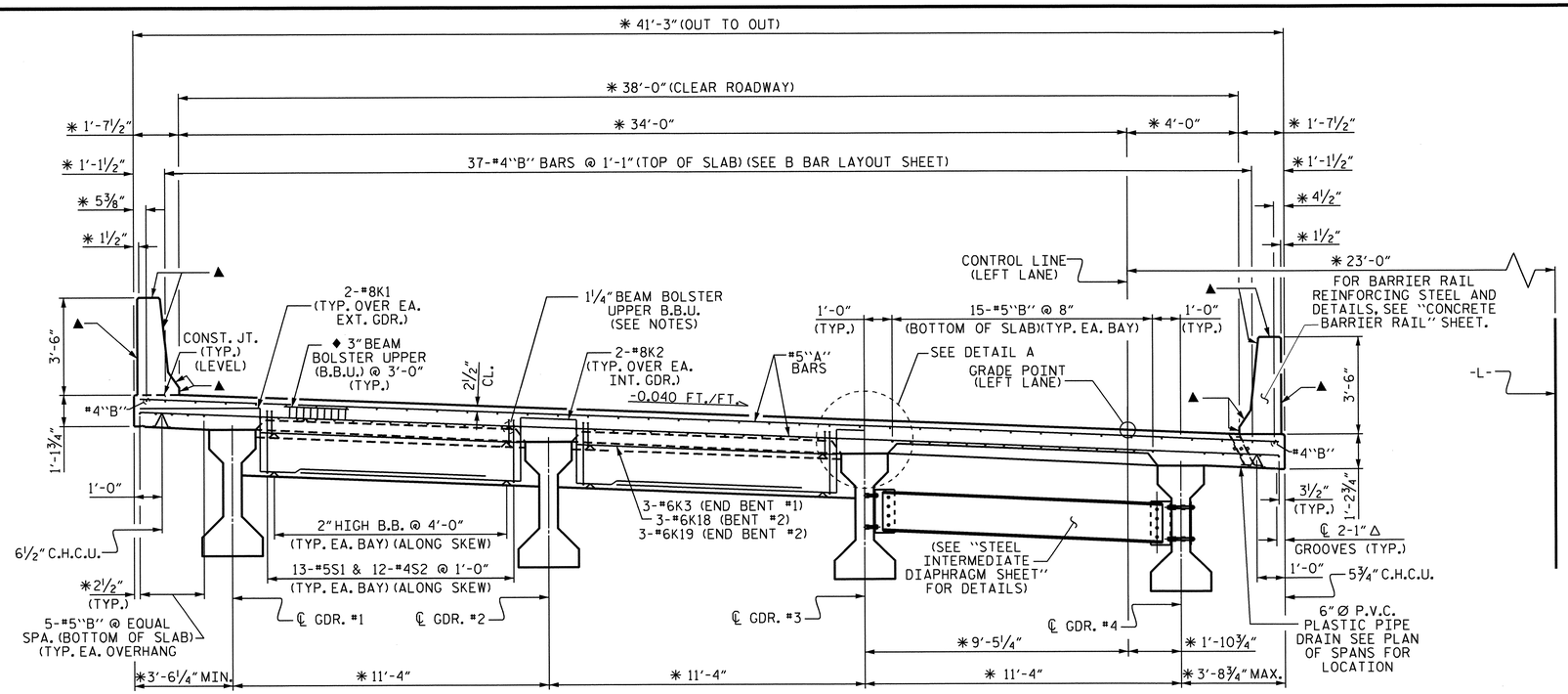

AT END BENT DIAPHRAGMS & BENT #2

AT INTERMEDIATE DIAPHRAGM

TYPICAL SECTION

NOTES

LONGITUDINAL STEEL MAY BE SHIFTED SLIGHTLY, AS NECESSARY, TO AVOID INTERFERENCE WITH STIRRUPS IN PRESTRESSED CONCRETE GIRDERS.

PREVIOUSLY CAST CONCRETE IN A CONTINUOUS UNIT SHALL HAVE ATTAINED A MINIMUM COMPRESSIVE STRENGTH OF 3,000 PSI BEFORE ADDITIONAL CONCRETE IS CAST IN THE UNIT.

BARRIER RAIL IN A CONTINUOUS UNIT SHALL NOT BE CAST UNTIL ALL SLAB CONCRETE IN THE UNIT HAS BEEN CAST AND HAS REACHED A MINIMUM COMPRESSIVE STRENGTH OF 3,000 PSI.

PROVIDE 1¼" HIGH BEAM BOLSTERS UPPER AT 4'-0" CTS. ATOP THE METAL STAY-IN-PLACE FORMS TO SUPPORT THE BOTTOM MAT OF 'A' BARS. WHEN USING REMOVABLE FORMS, PROVIDE CONTINUOUS HIGH CHAIRS FOR METAL DECK (C.H.C.M.) @ 4'-0" CTS. WITH A HEIGHT TO SUPPORT THE BOTTOM MAT OF 'A' BARS A CLEAR DISTANCE OF 2½" ABOVE THE TOP OF THE REMOVABLE FORM.

◆ USE THIS SIZE BAR SUPPORT IN THE AREAS WITH #4"B" BARS. FOR OTHER AREAS WITH #6"B" BARS, USE THE BAR SUPPORT AS SHOWN IN TYPICAL SECTION AT BENT.

▲ ALL EXPOSED SURFACES OF THE BARRIER RAILS TO BE PAINTED, SEE SPECIAL PROVISION FOR "APPLICATION OF BRIDGE COATING".

✱ DIMENSIONS ARE TO CIRCLES CONCENTRIC WITH -L-. GIRDERS ARE ON THE CHORDS OF THESE CIRCLES.

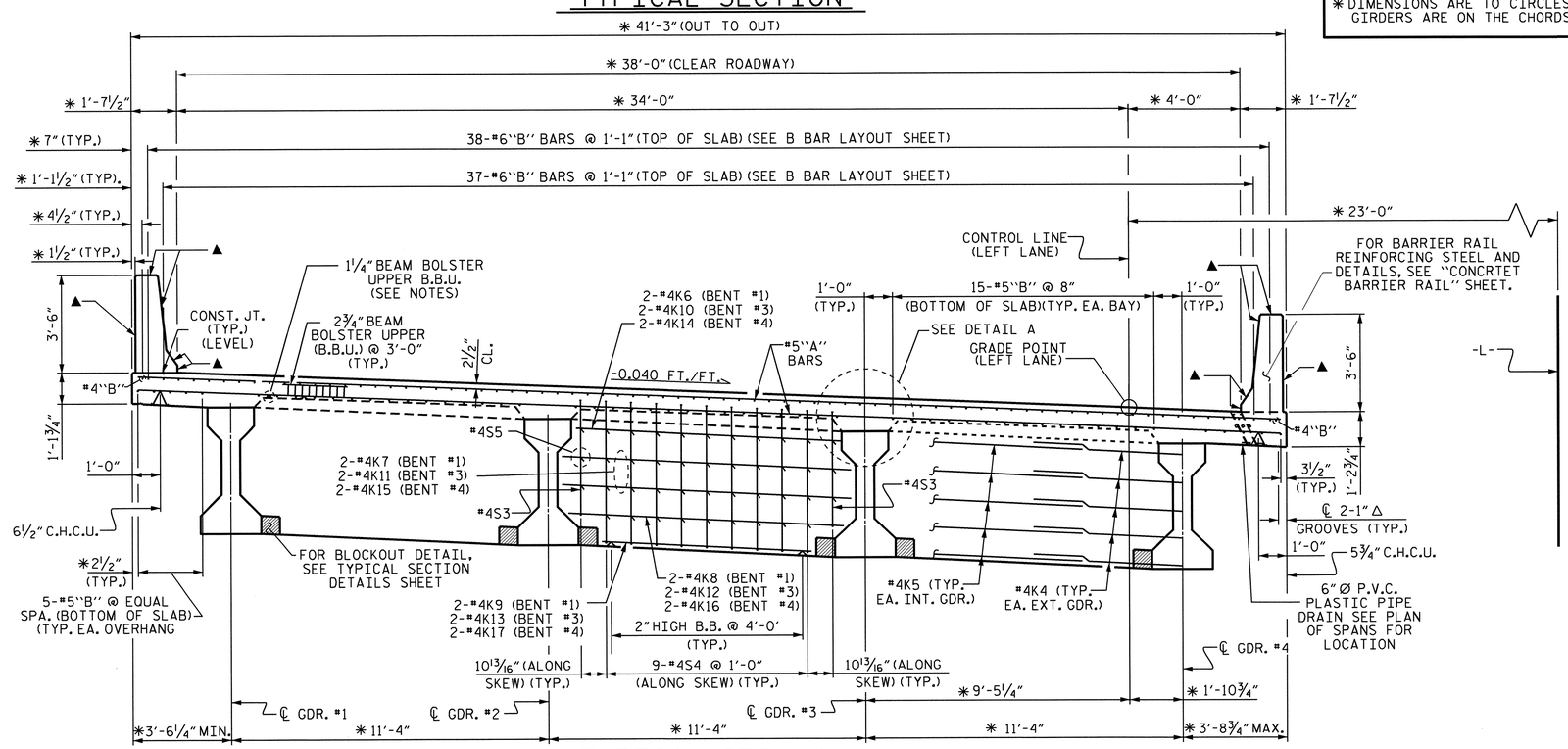

TYPICAL SECTION @ BENTS 1, 3 & 4

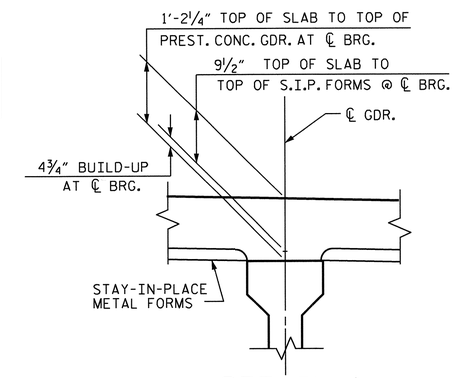

DETAIL A

PROJECT NO. R2707B

CLEVELAND COUNTY

STATION: 340+70.00 -L-

SHEET 1 OF 3

STATE OF NORTH CAROLINA
DEPARTMENT OF TRANSPORTATION
RALEIGH

SUPERSTRUCTURE TYPICAL SECTION (LEFT LANE)

NORTH CAROLINA PROFESSIONAL SEAL 15825 ENGINEER BRUCE O. KLAPPENBACH
3-5-2014

REVISIONS						SHEET NO.
NO.	BY:	DATE:	NO.	BY:	DATE:	S-131
1			3			TOTAL SHEETS
2			4			266

DRAWN BY : H. T. BARBOUR DATE : 7-11-11
CHECKED BY : D. A. GLADDEN DATE : 2-12

DESIGN ENGINEER OF RECORD: B. A. DUKE DATE : 5-13

05-MAR-2014 15:42
R:\Structures\Plans\Bailey\STR5and6\TBARBOUR\Microstation\LEFT LANE\SUPERSTRUCTURE\R2707B_SD_TS.dgn
bklappenbach

STR. #5

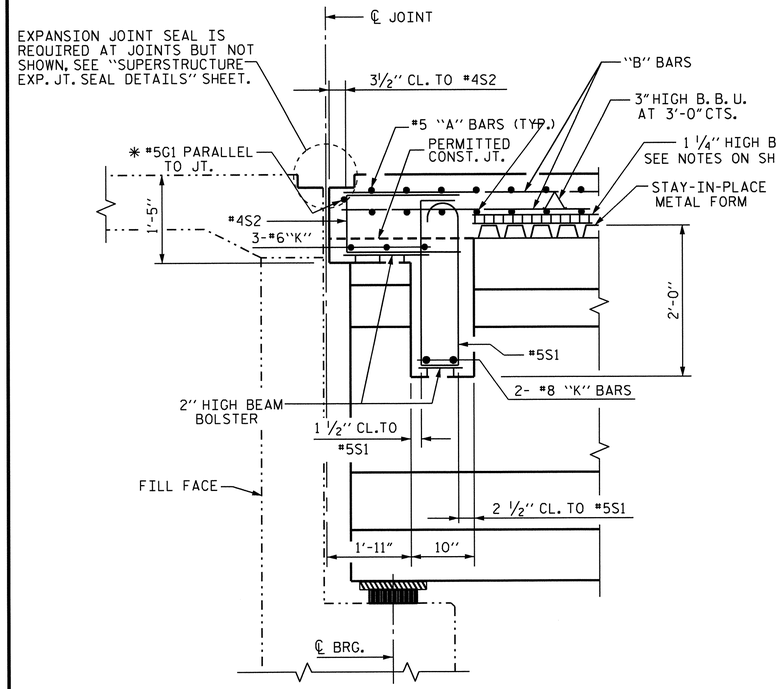

SECTION AT END BENT DIAPHRAGM

✱ #5 G1 MAY BE SHIFTED SLIGHTLY, AS NECESSARY, TO CLEAR REINFORCING STEEL AND STIRRUPS.

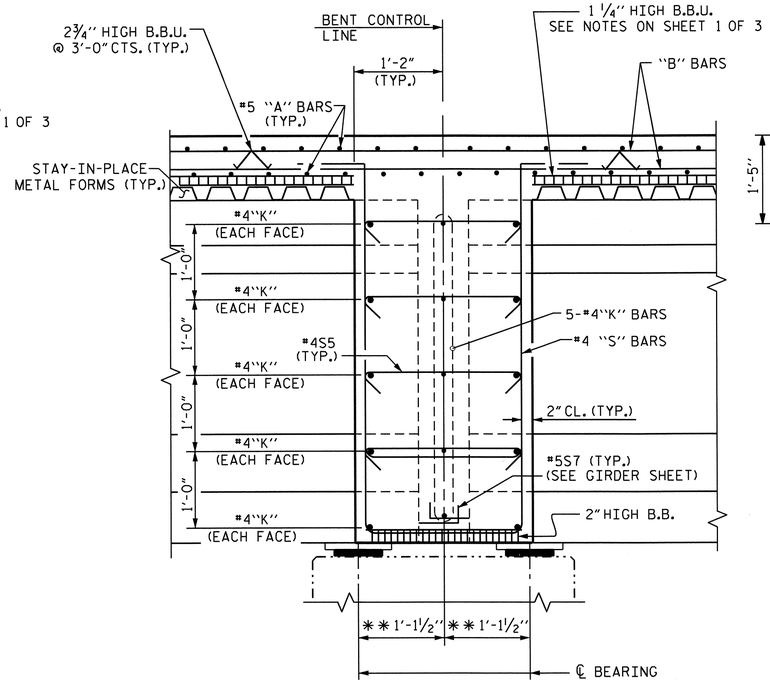

SECTION AT BENT DIAPHRAGMS 1, 3 & 4

✱✱ MEASURED ALONG ℄ GIRDER

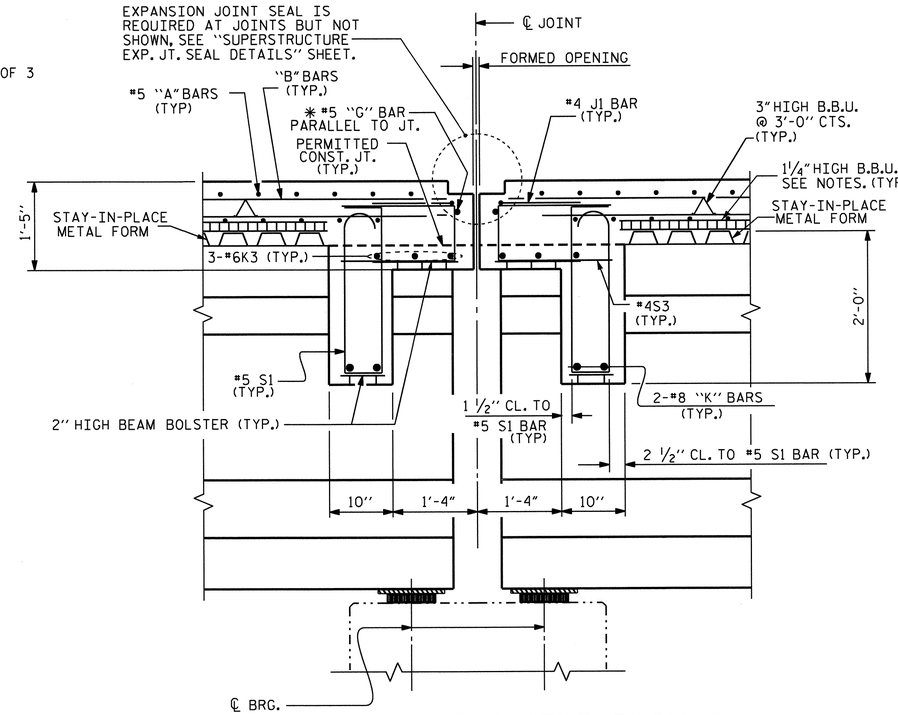

SECTION AT BENT DIAPHRAGM 2

✱ #5G BAR MAY BE SHIFTED SLIGHTLY, AS NECESSARY, TO CLEAR REINFORCING STEEI AND STIRRUPS.

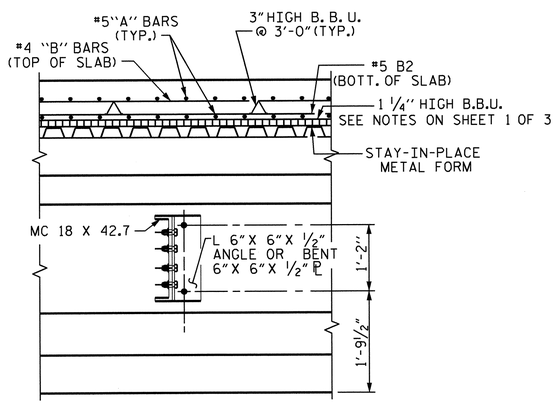

SECTION AT INTERMEDIATE STEEL DIAPHRAGM

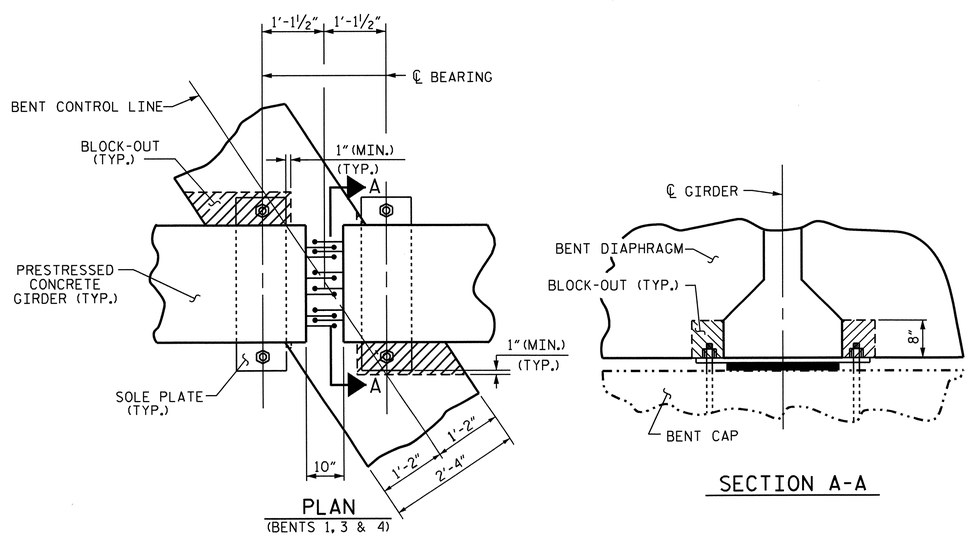

BENT DIAPHRAGM BLOCK-OUT DETAIL

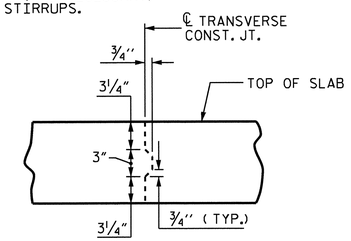

TRANSVERSE CONSTRUCTION JOINT DETAIL

NOTE: REINFORCING STEEL IN SLAB NOT SHOWN. LONGITUDINAL REINFORCING STEEL SHALL BE CONTINUOUS THROUGH JOINT.

PROJECT NO. R-2707B

CLEVELAND COUNTY

STATION: 340+70.00-L-

SHEET 2 OF 3

STATE OF NORTH CAROLINA
DEPARTMENT OF TRANSPORTATION
RALEIGH

SUPERSTRUCTURE TYPICAL SECTION DETAILS (LEFT LANE)

NORTH CAROLINA PROFESSIONAL SEAL 15825 ENGINEER B. A. DUKE
BRUCE A. DUKE
D. K. LADDEN
6-27-2013

REVISIONS						SHEET NO.
NO.	BY:	DATE:	NO.	BY:	DATE:	S-132
1			3			TOTAL SHEETS
2			4			266

STR. #5

DRAWN BY : H. T. BARBOUR DATE : 6-15-11
CHECKED BY : D. A. GLADDEN DATE : 2-12

DESIGN ENGINEER OF RECORD: B. A. DUKE DATE : 5-13

14-MAY-2013 08:57
K:\Structures\Plans\Bailey\STR5and6\TBARBOUR\Microstation\LEFT LANE\SUPERSTRUCTURE\R2707B_SD_TS.dgn
tbarbour

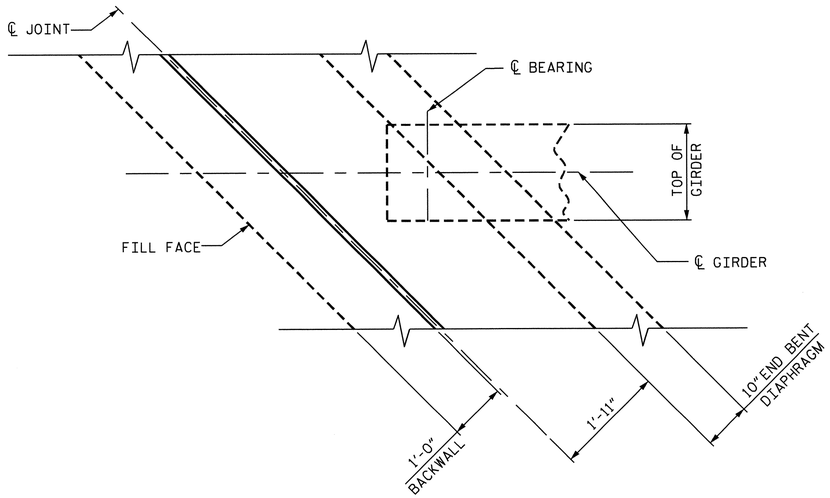

END BENT DIAPHRAGM

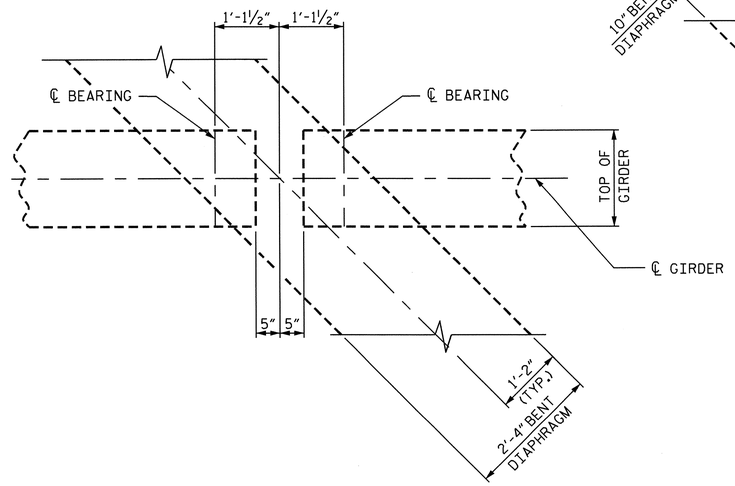

BENTS #1, #3 AND #4 DIAPHRAGMS

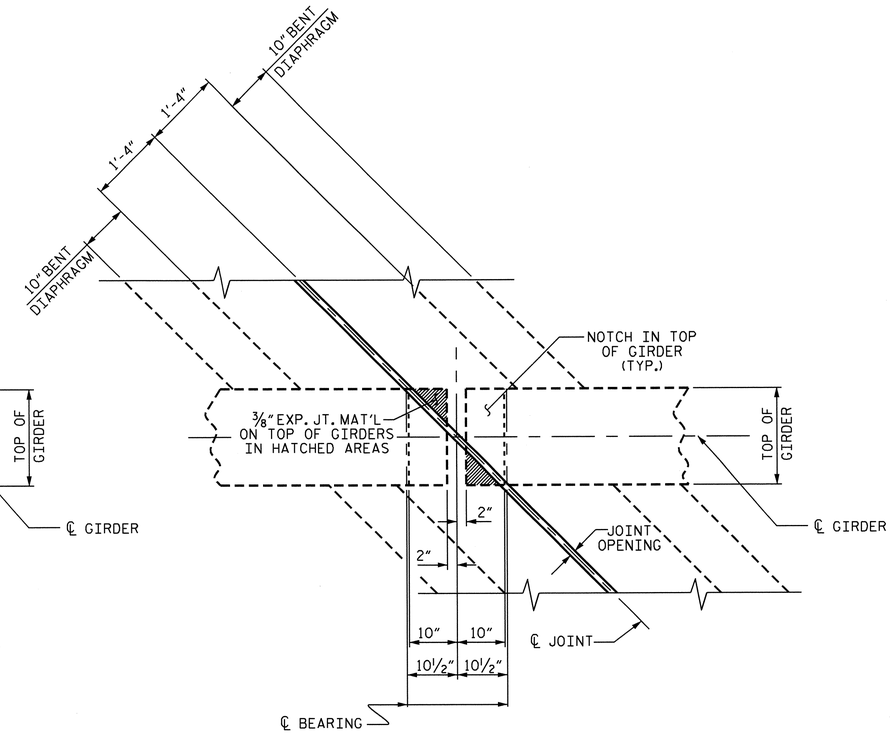

BENT #2 DIAPHRAGM

PLAN

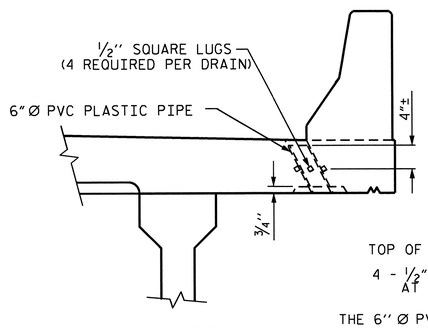

ELEVATION

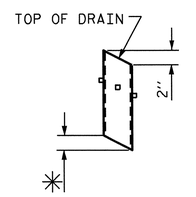

TO BE SET TO MATCH SLOPE ✳ OF BOTTOM OF OVERHANG (14 DRAINS REQUIRED)

PIPE DETAIL

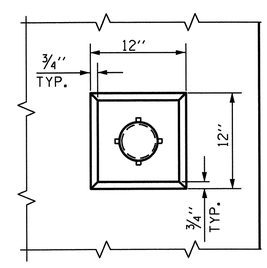

PLAN OF RECESS

TOP OF FLOOR DRAINS TO BE SET ⅜" BELOW SURFACE OF SLAB.

4 - ½" SQUARE LUGS TO BE GLUED TO THE P.V.C. PLASTIC PIPE AT EQUAL SPACES AROUND THE PIPE DRAIN APPROXIMATELY 4" FROM THE TOP OF THE PIPE.

THE 6" Ø PVC PLASTIC PIPE AND FITTINGS SHALL BE SCHEDULE 40 AND CONFORM TO ASTM D1785.

DRAIN DETAILS

PROJECT NO. R-2707B
CLEVELAND COUNTY
STATION: 340+70.00-L-

SHEET 3 OF 3

STATE OF NORTH CAROLINA
DEPARTMENT OF TRANSPORTATION
RALEIGH

SUPERSTRUCTURE TYPICAL SECTION DETAILS (LEFT LANE)

NORTH CAROLINA PROFESSIONAL SEAL 15825 ENGINEER BRUCE A. KLAPPENBACH
6-27-2013

REVISIONS						SHEET NO.
NO.	BY:	DATE:	NO.	BY:	DATE:	S-133
1			3			TOTAL SHEETS
2			4			266

DESIGN ENGINEER OF RECORD: B. A. DUKE DATE: 5-13
DRAWN BY: H. T. BARBOUR DATE: 7-11-11
CHECKED BY: D. A. GLADDEN DATE: 2-12

14-MAY-2013 08:56
K:\Structures\Plans\Bailey\STR5and6\TBARBOUR\Microstation\LEFT LANE\SUPERSTRUCTURE\R2707B_SD_TS.dgn
tbarbour

STR. #5

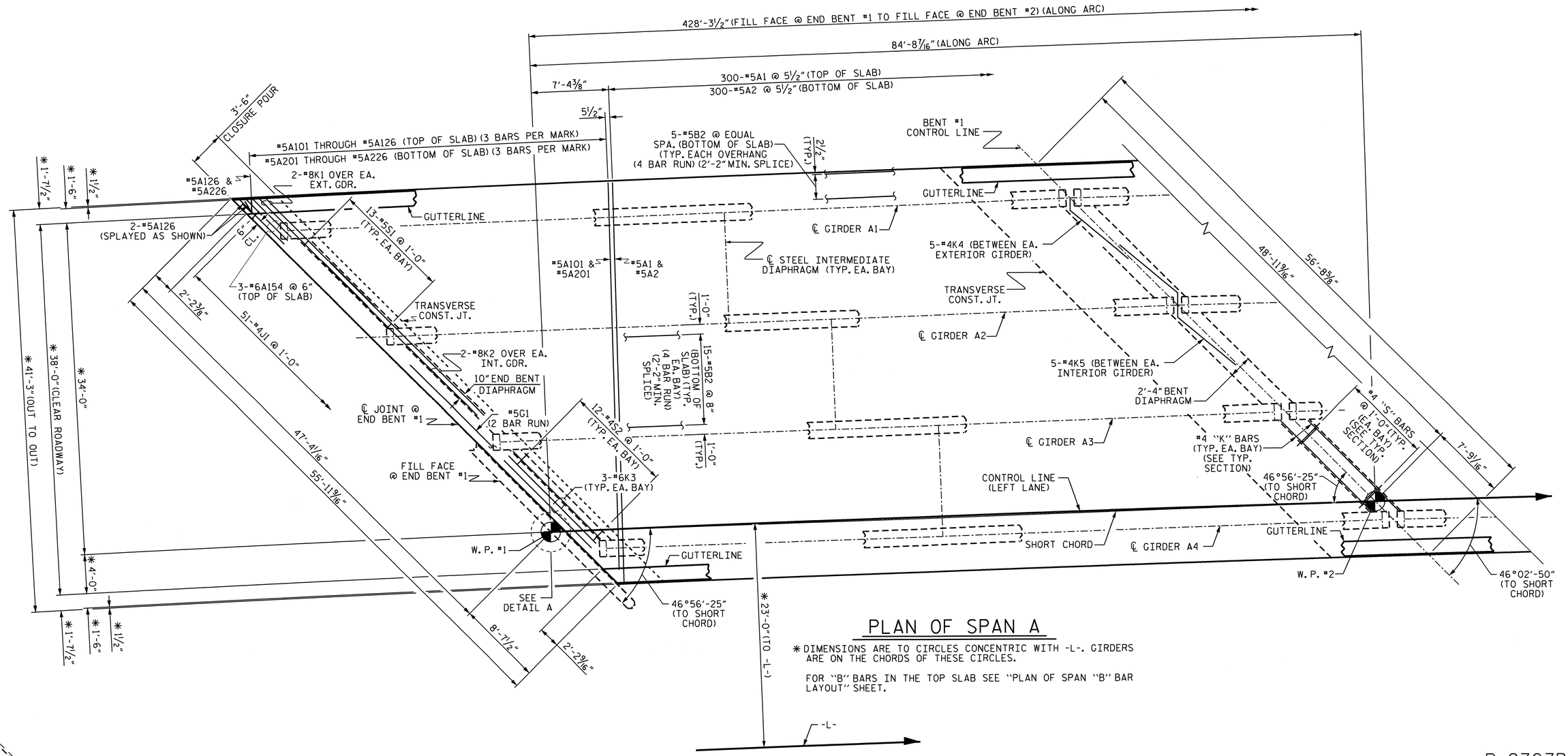

PLAN OF SPAN A

✱ DIMENSIONS ARE TO CIRCLES CONCENTRIC WITH -L-. GIRDERS ARE ON THE CHORDS OF THESE CIRCLES.

FOR "B" BARS IN THE TOP SLAB SEE "PLAN OF SPAN "B" BAR LAYOUT" SHEET.

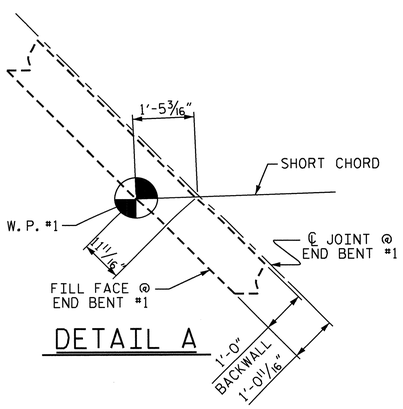

DETAIL A

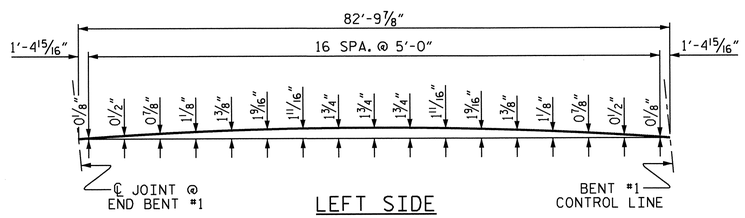

LEFT SIDE

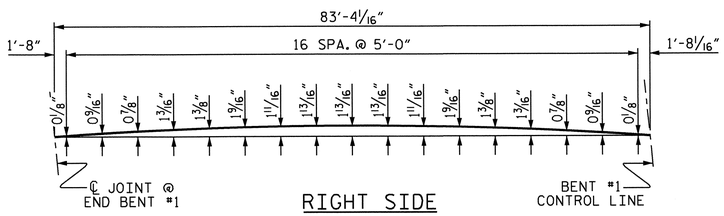

RIGHT SIDE

ARC OFFSETS

PROJECT NO. R-2707B

CLEVELAND COUNTY

STATION: 340+70.00-L-

SHEET 1 OF 5

STATE OF NORTH CAROLINA
DEPARTMENT OF TRANSPORTATION
RALEIGH

SUPERSTRUCTURE PLAN OF SPAN A (LEFT LANE)

NORTH CAROLINA PROFESSIONAL SEAL 15823 ENGINEER BRADFORD D. KLAPPENBACH 6-27-2013

REVISIONS								SHEET NO.
NO.	BY:	DATE:	NO.	BY:	DATE:			S-134
1			3					TOTAL SHEETS
2			4					266

STR. #5

DRAWN BY : H. T. BARBOUR	DATE : 6-29-11	DESIGN ENGINEER OF RECORD:
CHECKED BY : D. A. GLADDEN	DATE : 2-12	B. A. DUKE DATE : 5-13

24-JUN-2013 09:33
K:\Structures\Plans\Bailey\STR5and6\TBARBOUR\Microstation\LEFT LANE\SUPERSTRUCTURE\R2707B_SD_S*.dgn
tbarbour

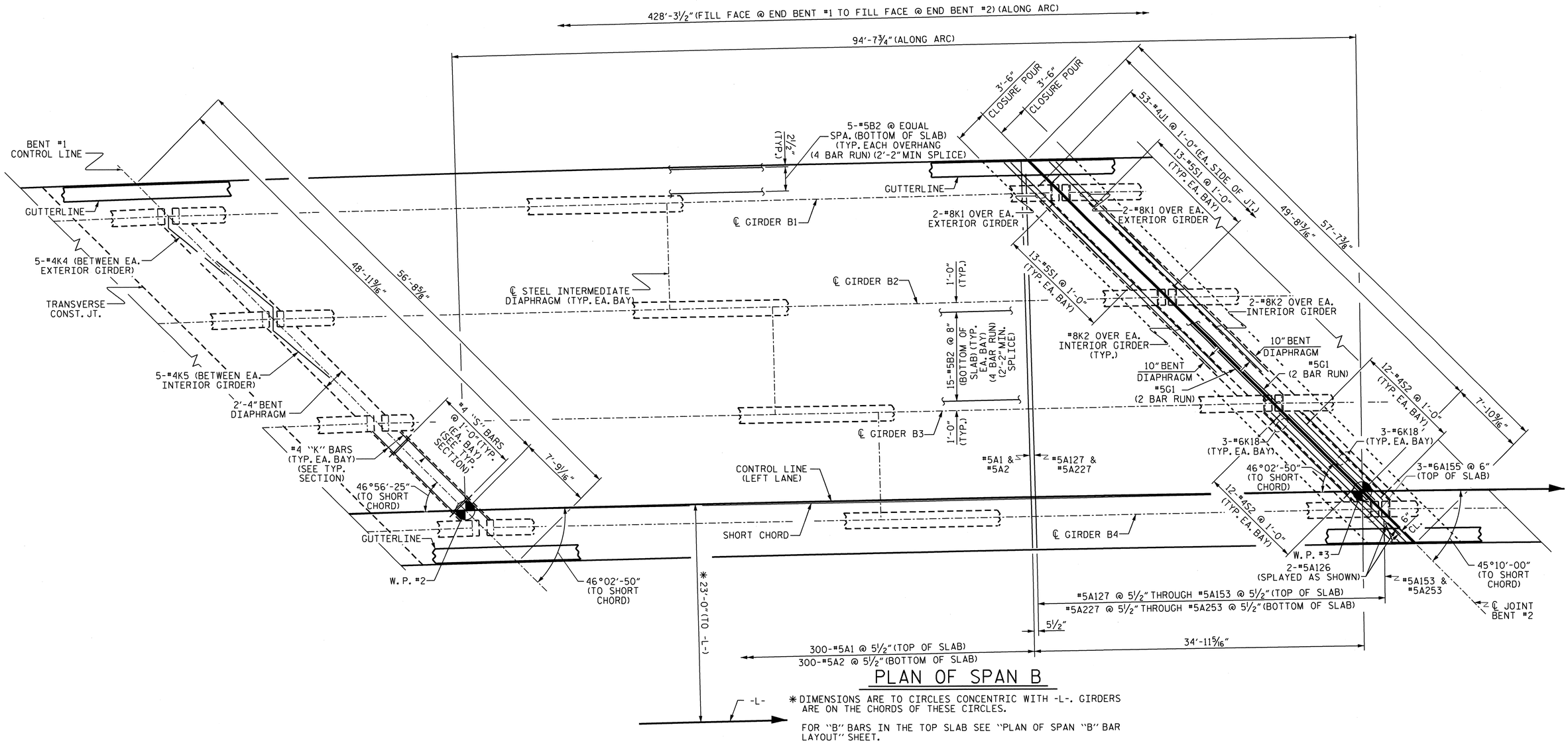

PLAN OF SPAN B

* DIMENSIONS ARE TO CIRCLES CONCENTRIC WITH -L-. GIRDERS ARE ON THE CHORDS OF THESE CIRCLES.

FOR "B" BARS IN THE TOP SLAB SEE "PLAN OF SPAN "B" BAR LAYOUT" SHEET.

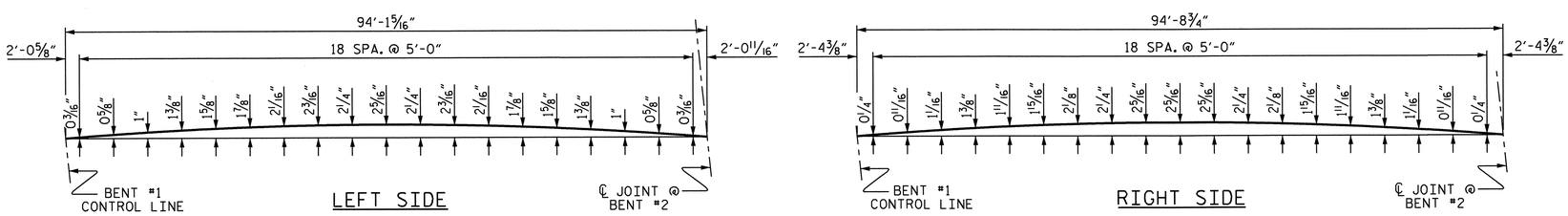

LEFT SIDE

RIGHT SIDE

ARC OFFSETS

PROJECT NO. R-2707B

CLEVELAND COUNTY

STATION: 340+70.00-L-

SHEET 2 OF 5

STATE OF NORTH CAROLINA
DEPARTMENT OF TRANSPORTATION
RALEIGH

SUPERSTRUCTURE PLAN OF SPAN B (LEFT LANE)

NORTH CAROLINA PROFESSIONAL SEAL 15825 ENGINEER BRUCE D. KLAPPENBACH 6-25-2012

REVISIONS								SHEET NO.
NO.	BY:	DATE:	NO.	BY:	DATE:			S-135
1			3					TOTAL SHEETS
2			4					266

STR. #5

DRAWN BY : H. T. BARBOUR DATE : 6-29-11	DESIGN ENGINEER OF RECORD:
CHECKED BY : D. A. GLADDEN DATE : 2-12	B. A. DUKE DATE : 5-13

25-JUN-2013 10:18
K:\Structures\Plans\Bolley\STR5and6\TBARBOUR\Microstation\LEFT LANE\SUPERSTRUCTURE\R2707B_SD_S*.dgn
tbarbour

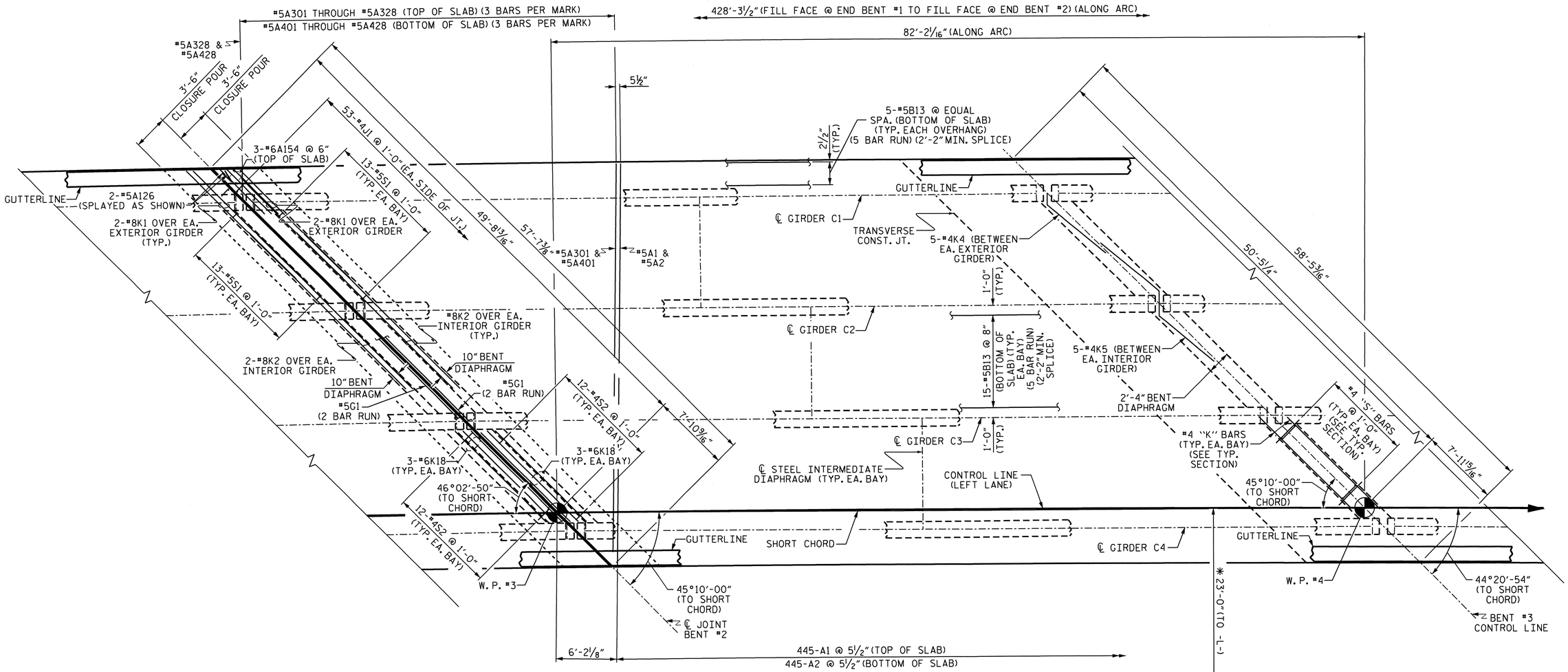

PLAN OF SPAN C

* DIMENSIONS ARE TO CIRCLES CONCENTRIC WITH -L-. GIRDERS ARE ON THE CHORDS OF THESE CIRCLES.

FOR "B" BARS IN THE TOP SLAB SEE "PLAN OF SPAN "B" BAR LAYOUT" SHEET.

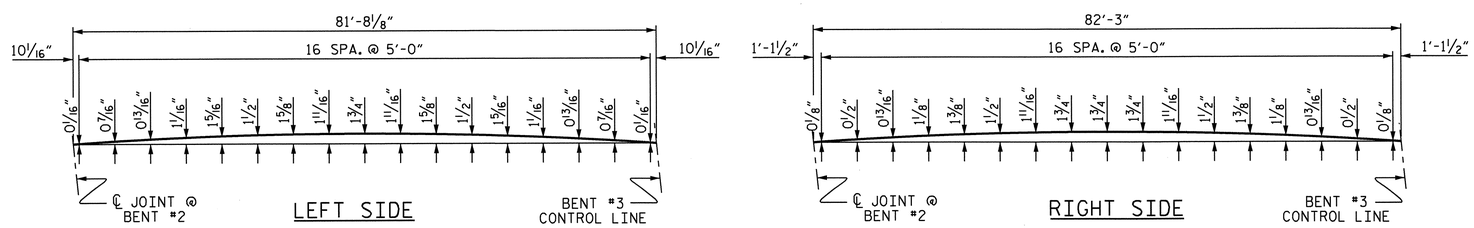

ARC OFFSETS

PROJECT NO. R-2707B
CLEVELAND COUNTY
STATION: 340+70.00-L-

SHEET 3 OF 5

STATE OF NORTH CAROLINA
DEPARTMENT OF TRANSPORTATION
RALEIGH

SUPERSTRUCTURE
PLAN OF SPAN C
(LEFT LANE)

NORTH CAROLINA PROFESSIONAL SEAL 5825 ENGINEER D. KLAPPENBACH 6-28-2013

REVISIONS						SHEET NO.
NO.	BY:	DATE:	NO.	BY:	DATE:	S-136
1			3			TOTAL SHEETS
2			4			266

STR. #5

DRAWN BY : H. T. BARBOUR DATE : 6-29-11
CHECKED BY : D. A. GLADDEN DATE : 2-12
DESIGN ENGINEER OF RECORD: B. A. DUKE DATE : 5-13

24-JUN-2013 09:38
K:\Structures\Plans\Bailey\STR5and6\TBARBOUR\Microstation\LEFT LANE\SUPERSTRUCTURE\R2707B_SD_S*.dgn
tbarbour

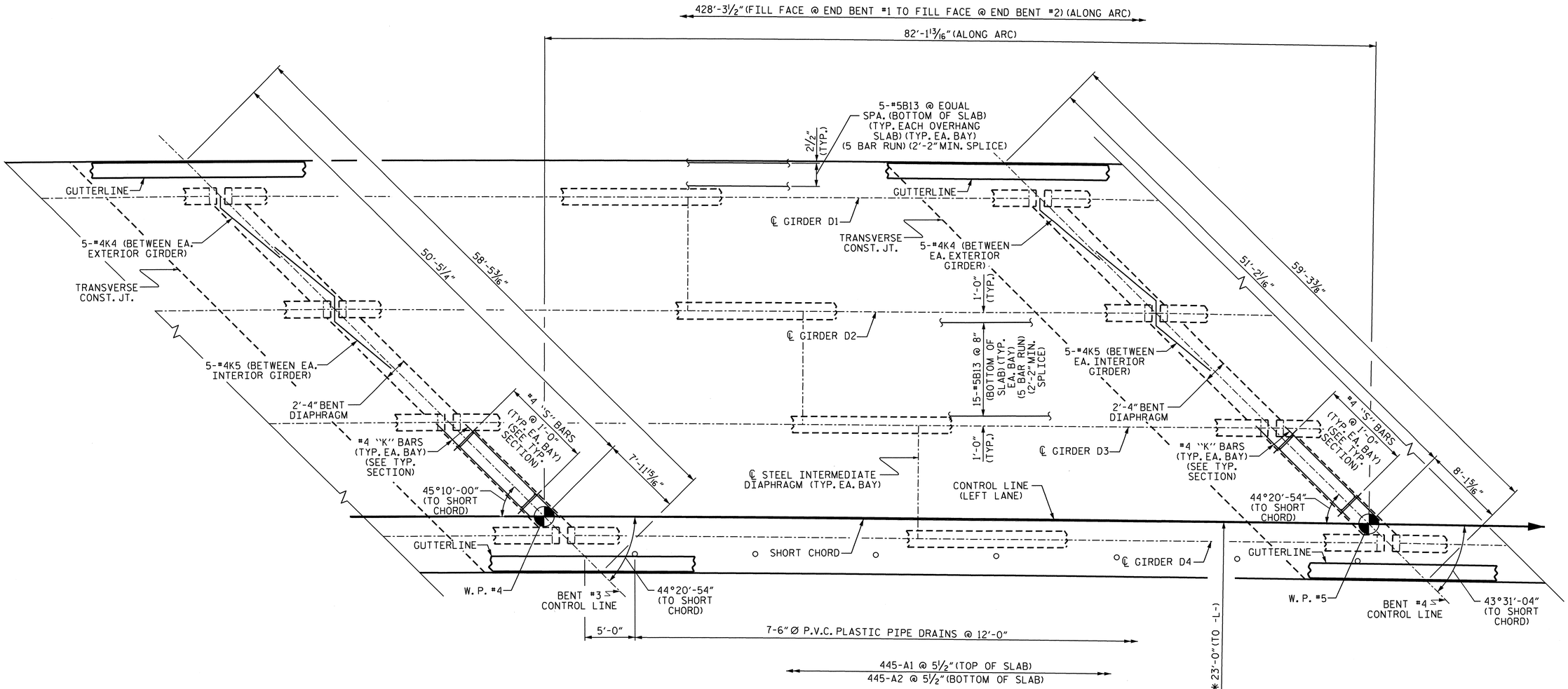

PLAN OF SPAN D

* DIMENSIONS ARE TO CIRCLES CONCENTRIC WITH -L-. GIRDERS ARE ON THE CHORDS OF THESE CIRCLES.

FOR "B" BARS IN THE TOP SLAB SEE "PLAN OF SPAN "B" BAR LAYOUT" SHEET.

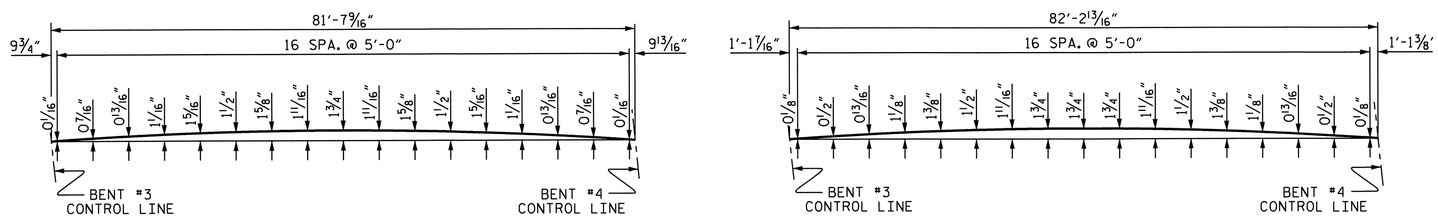

LEFT SIDE

RIGHT SIDE

ARC OFFSETS

PROJECT NO. R-2707B

CLEVELAND COUNTY

STATION: 340+70.00-L-

SHEET 4 OF 5

STATE OF NORTH CAROLINA
DEPARTMENT OF TRANSPORTATION
RALEIGH

SUPERSTRUCTURE PLAN OF SPAN D (LEFT LANE)

REVISIONS						SHEET NO.
NO.	BY:	DATE:	NO.	BY:	DATE:	S-137
1			3			TOTAL SHEETS
2			4			266

STR. #5

NORTH CAROLINA PROFESSIONAL SEAL 15825 ENGINEER D. KLAPPENBACH

DRAWN BY : H. T. BARBOUR DATE : 6-29-11
CHECKED BY : D. A. GLADDEN DATE : 2-12

DESIGN ENGINEER OF RECORD: B. A. DUKE DATE : 5-13

14-MAY-2013 08:55
K:\Structures\Plans\Bailey\STR5and6\TBARBOUR\Microstation\LEFT LANE\SUPERSTRUCTURE\R2707B_SD_S*.dgn
tbarbour

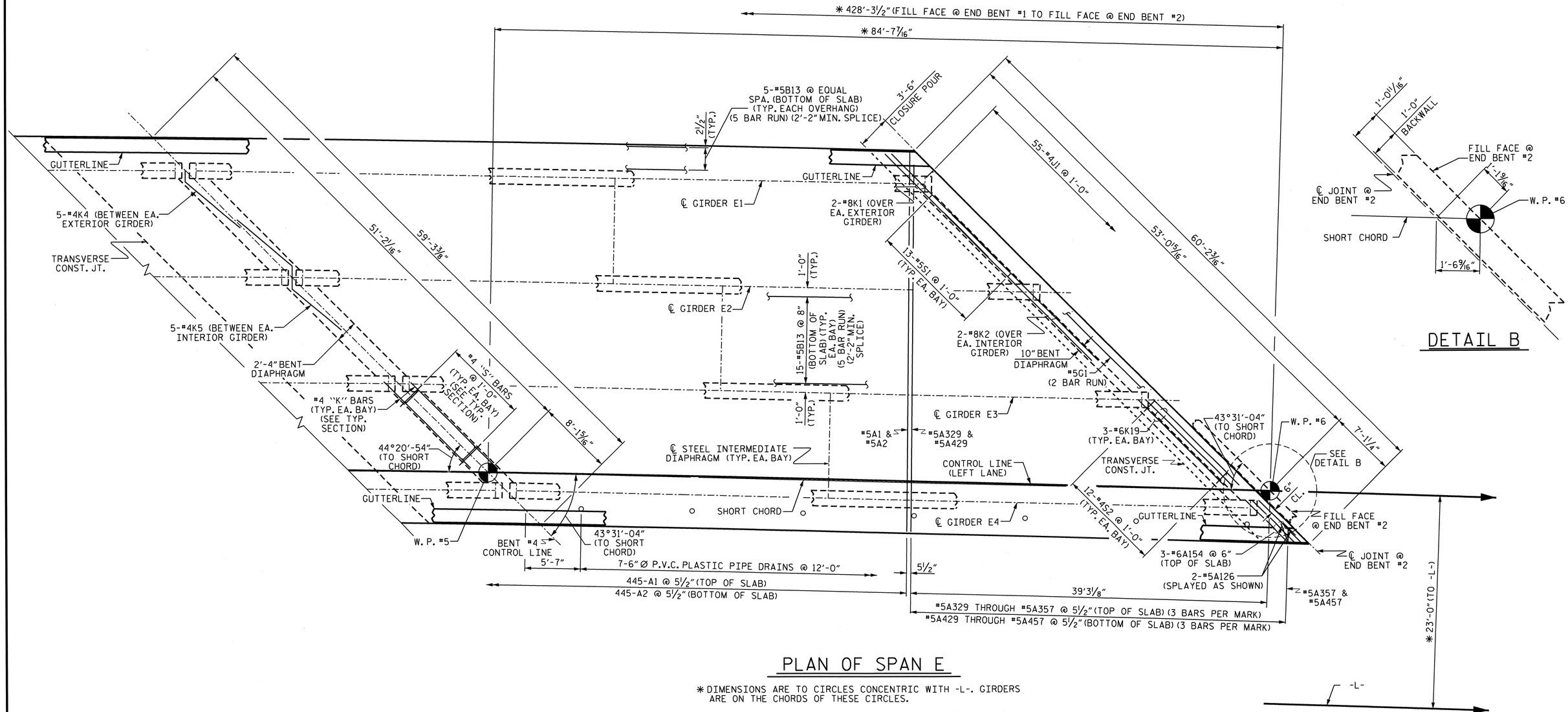

PLAN OF SPAN E

* DIMENSIONS ARE TO CIRCLES CONCENTRIC WITH -L-. GIRDERS ARE ON THE CHORDS OF THESE CIRCLES.

FOR "B" BARS IN THE TOP SLAB SEE "PLAN OF SPAN "B" BAR LAYOUT" SHEET.

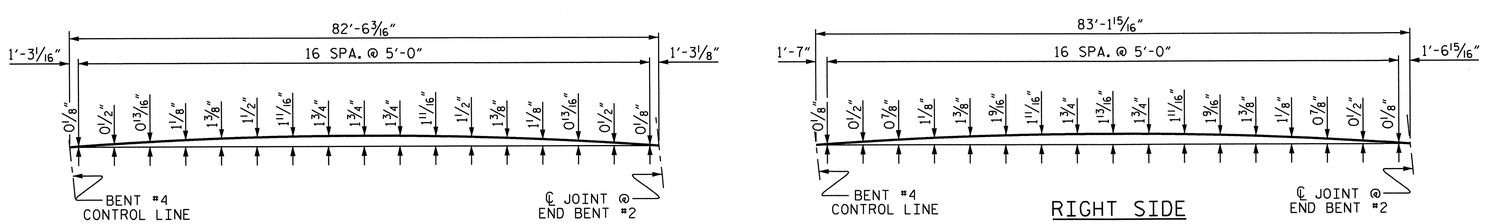

ARC OFFSETS

PROJECT NO. R-2707B
CLEVELAND COUNTY
STATION: 340+70.00-L-

SHEET 5 OF 5

STATE OF NORTH CAROLINA
DEPARTMENT OF TRANSPORTATION
RALEIGH

SUPERSTRUCTURE PLAN OF SPAN E (LEFT LANE)

NORTH CAROLINA PROFESSIONAL SEAL 15825 ENGINEER BRUCE D. KLAPPENBACH 6-27-2012

REVISIONS						SHEET NO.
NO.	BY:	DATE:	NO.	BY:	DATE:	S-138
1			3			TOTAL SHEETS
2			4			266

STR. #5

DRAWN BY : H. T. BARBOUR DATE : 6-29-11
CHECKED BY : D. A. GLADDEN DATE : 2-12

DESIGN ENGINEER OF RECORD:
B. A. DUKE DATE : 5-13

24-JUN-2013 09:38
K:\Structures\Plans\Bailey\STR5and6\TBARBOUR\Microstation\LEFT LANE\SUPERSTRUCTURE\R2707B_SD_S*.dgn
tbarbour

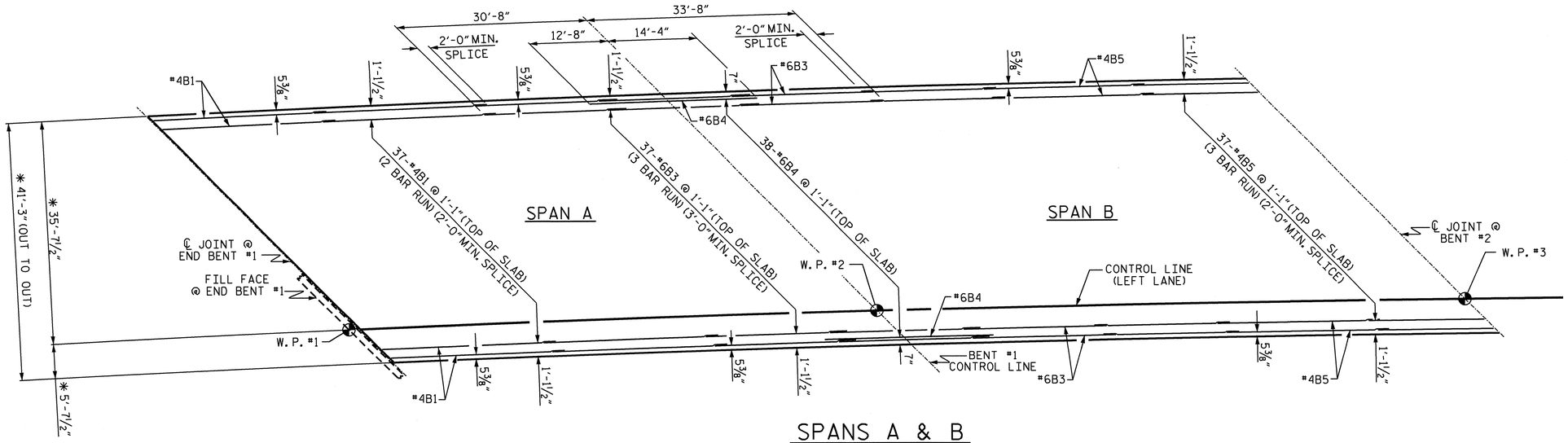

SPANS A & B

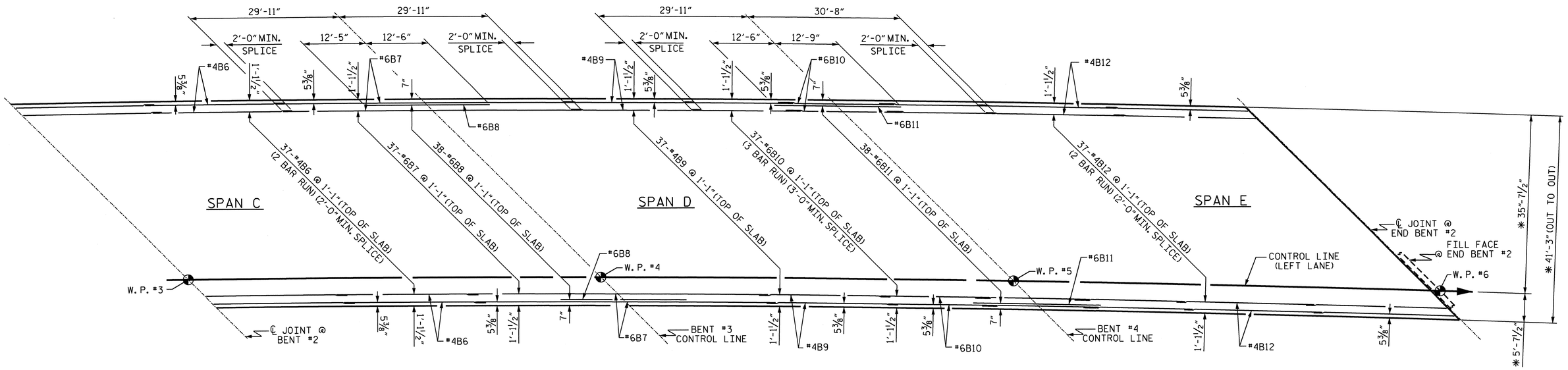

SPANS C, D & E

✱ DIMENSIONS ARE TO CIRCLES CONCENTRIC WITH -L-. GIRDERS ARE ON THE CHORDS OF THESE CIRCLES.

PROJECT NO. R-2707B
CLEVELAND COUNTY
STATION: 340+70.00-L-

STATE OF NORTH CAROLINA
DEPARTMENT OF TRANSPORTATION
RALEIGH

SUPERSTRUCTURE B BAR LAYOUT (LEFT LANE)

NORTH CAROLINA PROFESSIONAL SEAL 15828 ENGINEER DANIELLE D. KLAPPENBACH
6-27-2013

REVISIONS						SHEET NO.
NO.	BY:	DATE:	NO.	BY:	DATE:	S-139
1			3			TOTAL SHEETS
2			4			266

STR. #5

DESIGN ENGINEER OF RECORD: B. A. DUKE DATE: 5-13
DRAWN BY: H. T. BARBOUR DATE: 7-8-11
CHECKED BY: D. A. GLADDEN DATE: 2-12

14-MAY-2013 08:55
K:\Structures\Plans\Bailey\STR5and6\TBARBOUR\Microstation\LEFT LANE\SUPERSTRUCTURE\R2707B_SD_S*.dgn
tbarbour

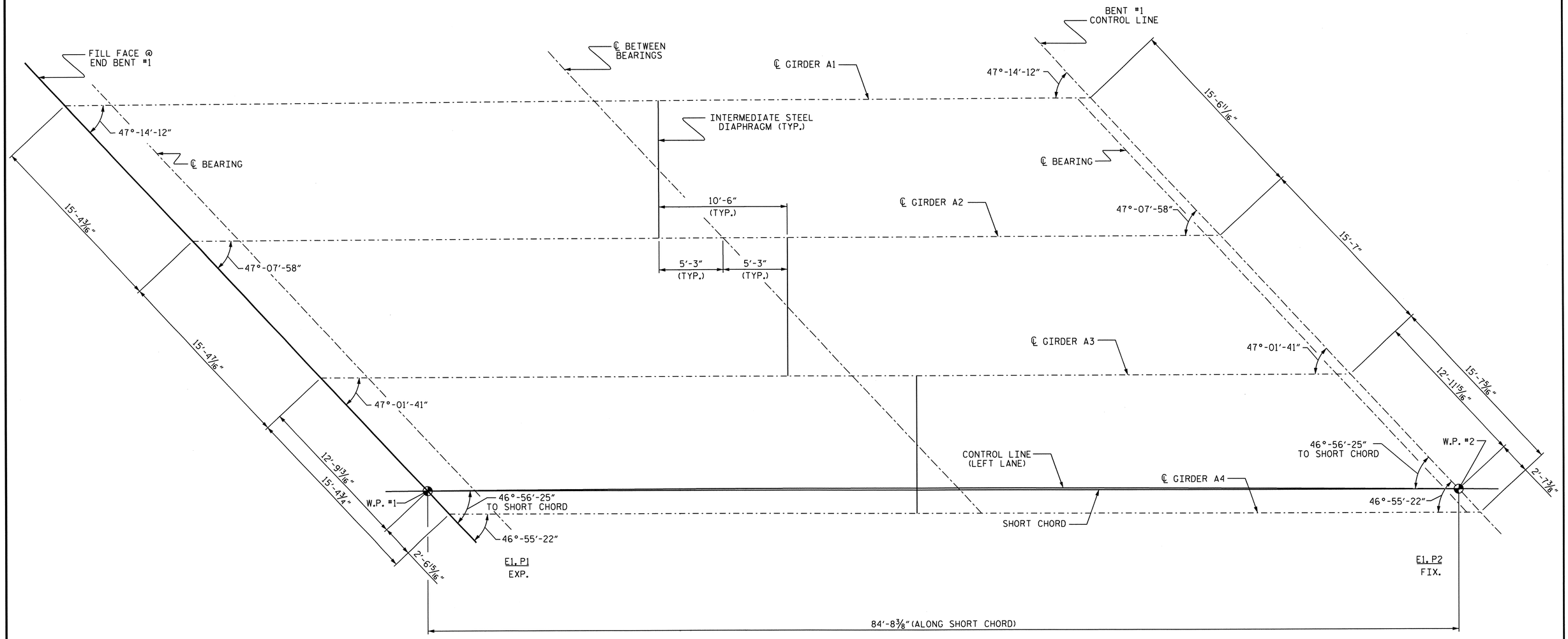

FRAMING PLAN SPAN A

PROJECT NO. R2707B

CLEVELAND COUNTY

STATION: 340+70.00-L-

SHEET 1 OF 5

STATE OF NORTH CAROLINA
DEPARTMENT OF TRANSPORTATION
RALEIGH

SUPERSTRUCTURE FRAMING PLAN (LEFT LANE)

NORTH CAROLINA PROFESSIONAL SEAL 15828 ENGINEER D. KLAPPENBACH
6-27-2013

REVISIONS						SHEET NO.
NO.	BY:	DATE:	NO.	BY:	DATE:	S-140
1			3			TOTAL SHEETS
2			4			266

DESIGN ENGINEER OF RECORD: B. A. DUKE DATE : 5-13

DRAWN BY : H. T. BARBOUR DATE : 7-13-11

CHECKED BY : D. A. GLADDEN DATE : 12-11

14-MAY-2013 18:56
K:\Structures\Plans\Bailey\STR5and6\TBARBOUR\Microstation\LEFT LANE\SUPERSTRUCTURE\R2707B_SD_FP.dgn
tbarbour

STR #5

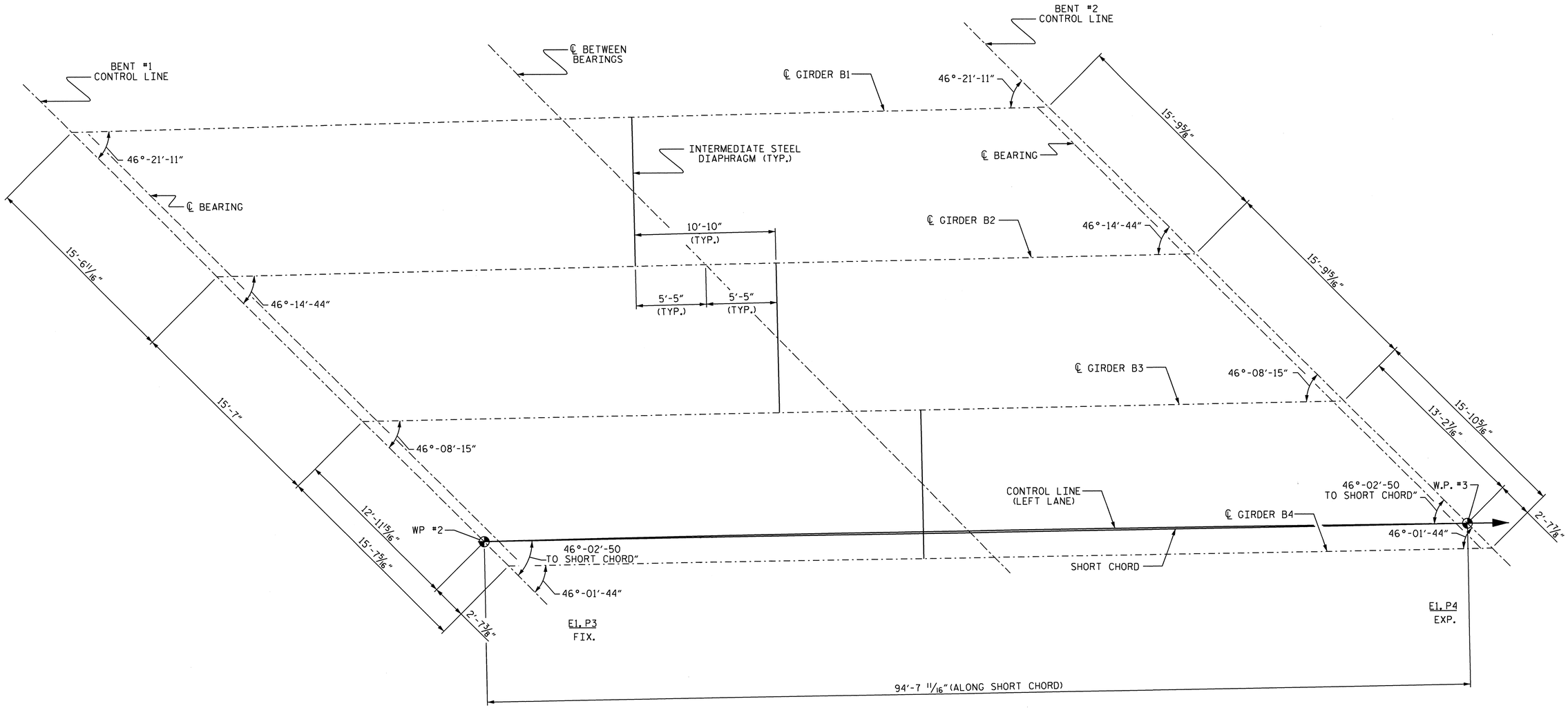

FRAMING PLAN SPAN B

PROJECT NO. R2707B

CLEVELAND COUNTY

STATION: 340+70.00-L-

SHEET 2 OF 5

STATE OF NORTH CAROLINA
DEPARTMENT OF TRANSPORTATION
RALEIGH

SUPERSTRUCTURE FRAMING PLAN (LEFT LANE)

NORTH CAROLINA PROFESSIONAL SEAL 15825 ENGINEER BRUCE D. KLAPPENBACH 6-27-2013

REVISIONS						SHEET NO.
NO.	BY:	DATE:	NO.	BY:	DATE:	S-141
1			3			TOTAL SHEETS
2			4			266

DESIGN ENGINEER OF RECORD: B. A. DUKE DATE : 5-13

DRAWN BY : H. T. BARBOUR DATE : 7-13-11

CHECKED BY : D. A. GLADDEN DATE : 12-11

14-MAY-2013 18:56
K:\Structures\Plans\Bailey\STR5and6\TBARBOUR\Microstation\LEFT LANE\SUPERSTRUCTURE\R2707B_SD_FP.dgn
tbarbour

STR #5

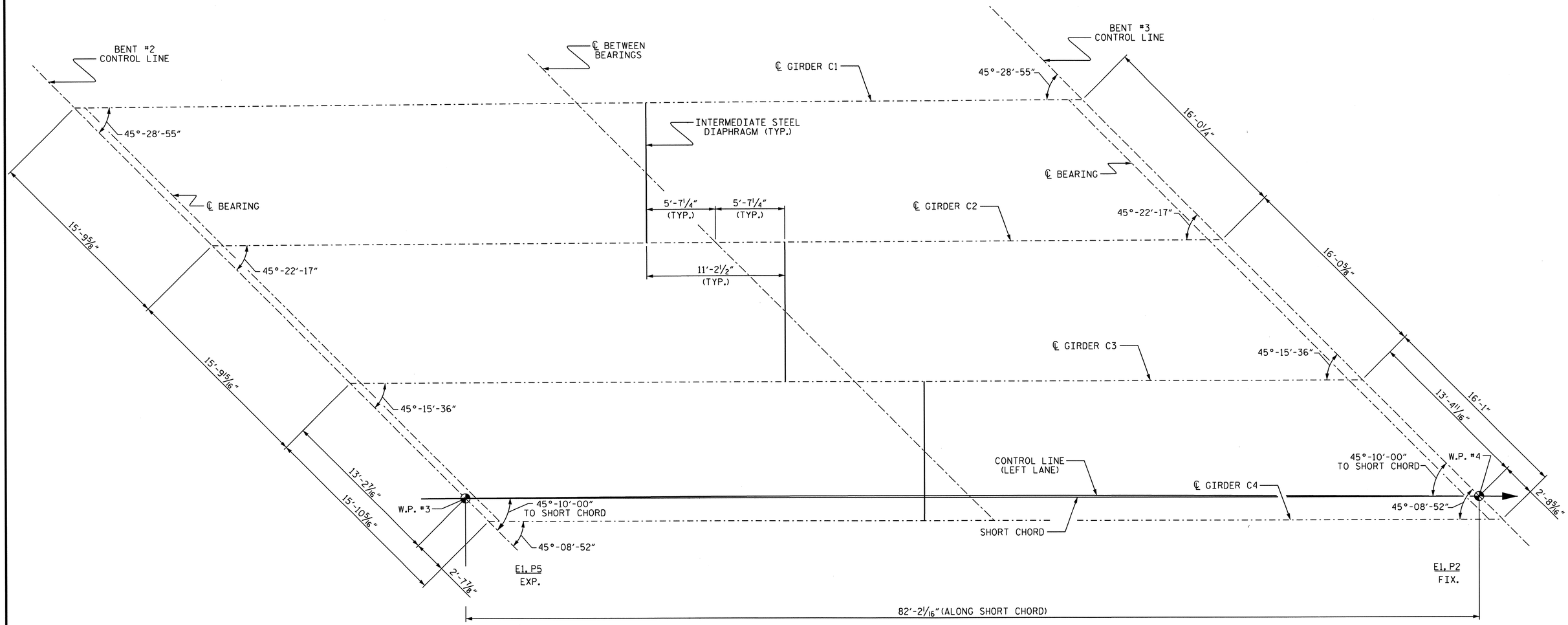

FRAMING PLAN SPAN C

PROJECT NO. R2707B

CLEVELAND COUNTY

STATION: 340+70.00-L-

SHEET 3 OF 5

STATE OF NORTH CAROLINA
DEPARTMENT OF TRANSPORTATION
RALEIGH

SUPERSTRUCTURE FRAMING PLAN (LEFT LANE)

NORTH CAROLINA PROFESSIONAL SEAL 15825 ENGINEER BRUCE O. KLAPPENBACH
6-27-2013

REVISIONS						SHEET NO.
NO.	BY:	DATE:	NO.	BY:	DATE:	S-142
1			3			TOTAL SHEETS
2			4			266

DESIGN ENGINEER OF RECORD: B. A. DUKE DATE: 5-13

DRAWN BY: H. T. BARBOUR DATE: 7-13-11

CHECKED BY: D. A. GLADDEN DATE: 12-11

14-MAY-2013 18:55
K:\Structures\Plans\Bailey\STR5and6\TBARBOUR\Microstation\LEFT LANE\SUPERSTRUCTURE\R2707B_SD_FP.dgn
tbarbour

STR #5

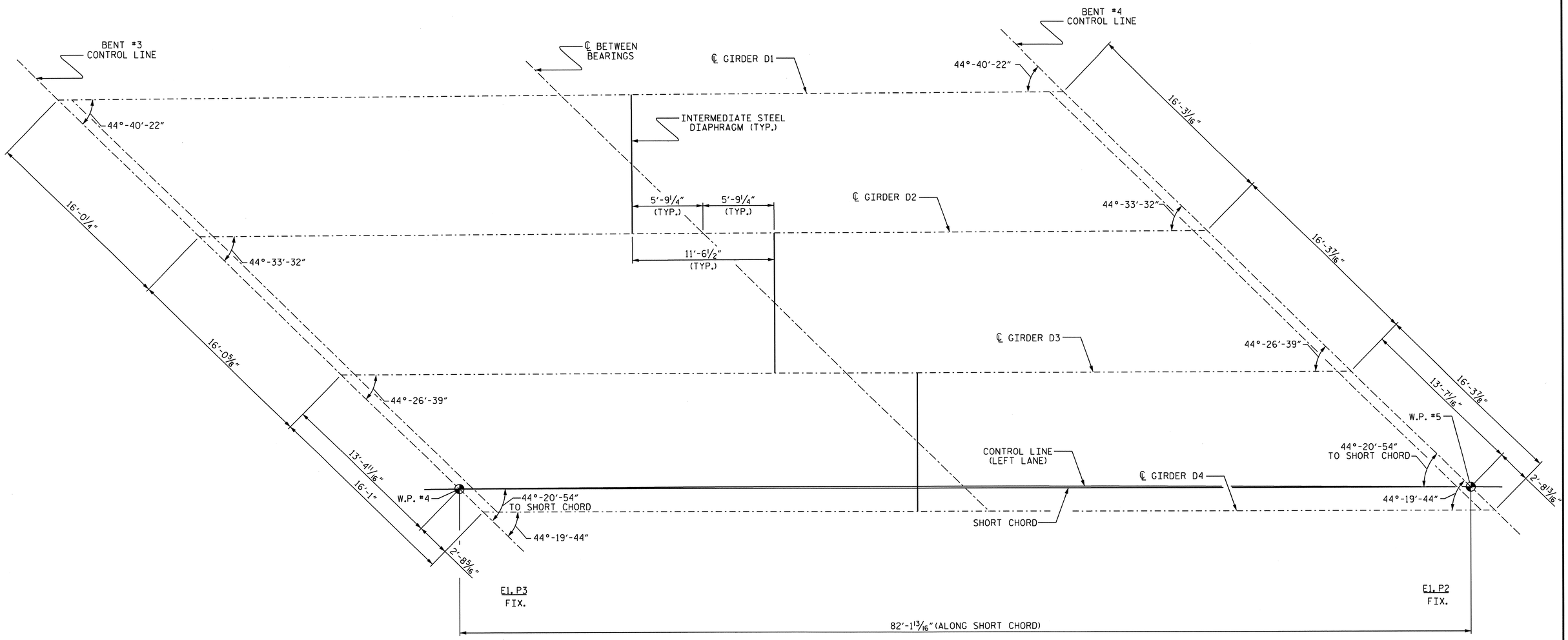

FRAMING PLAN SPAN D

PROJECT NO. R2707B

CLEVELAND COUNTY

STATION: 340+70.00-L-

SHEET 4 OF 5

STATE OF NORTH CAROLINA
DEPARTMENT OF TRANSPORTATION
RALEIGH

SUPERSTRUCTURE FRAMING PLAN (LEFT LANE)

NORTH CAROLINA PROFESSIONAL SEAL 15825 ENGINEER BRUCE A. DUKE DAVID A. KLAPPENBACH 6-27-2013

REVISIONS						SHEET NO.
NO.	BY:	DATE:	NO.	BY:	DATE:	S-143
1			3			TOTAL SHEETS
2			4			266

DESIGN ENGINEER OF RECORD: B. A. DUKE DATE : 5-13

DRAWN BY : H. T. BARBOUR DATE : 7-13-11

CHECKED BY : D. A. GLADDEN DATE : 12-11

14-MAY-2013 18:55
K:\Structures\Plans\Bailey\STR5and6\TBARBOUR\Microstation\LEFT LANE\SUPERSTRUCTURE\R2707B_SD_FP.dgn
tbarbour

STR #5

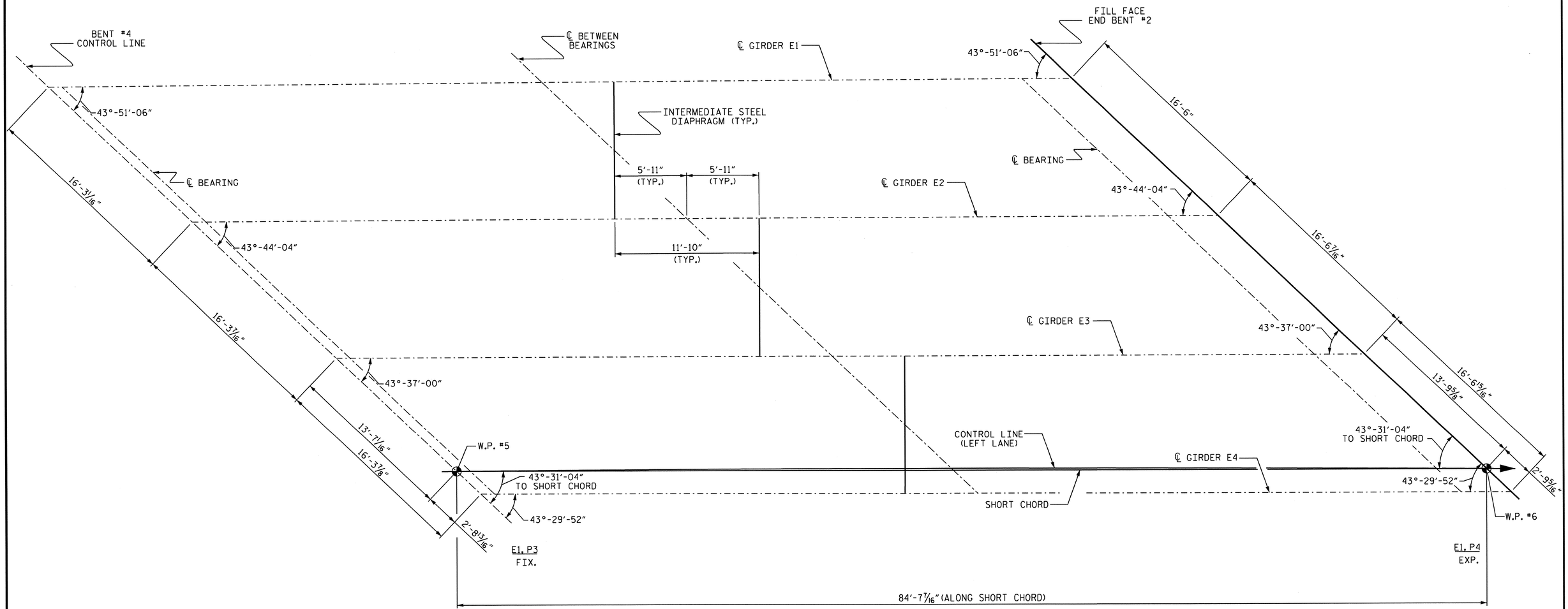

FRAMING PLAN SPAN E

PROJECT NO. R2707B

CLEVELAND COUNTY

STATION: 340+70.00-L-

SHEET 5 OF 5

STATE OF NORTH CAROLINA
DEPARTMENT OF TRANSPORTATION
RALEIGH

SUPERSTRUCTURE FRAMING PLAN (LEFT LANE)

NORTH CAROLINA PROFESSIONAL SEAL 15825 ENGINEER BRUCE D. KLAPPENBACH 6-27-2013

REVISIONS						SHEET NO.
NO.	BY:	DATE:	NO.	BY:	DATE:	S-144
1			3			TOTAL SHEETS
2			4			266

DESIGN ENGINEER OF RECORD: B. A. DUKE DATE : 5-13

DRAWN BY : H. T. BARBOUR DATE : 7-13-11

CHECKED BY : D. A. GLADDEN DATE : 12-11

14-MAY-2013 18:55
K:\Structures\Plans\Bailey\STR5and6\TBARBOUR\Microstation\LEFT LANE\SUPERSTRUCTURE\R2707B_SD_FP.dgn
tbarbour

STR #5

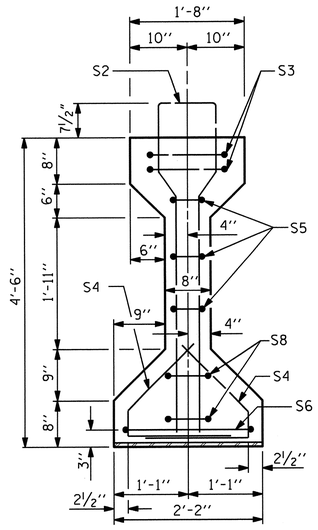

SECTION A-A

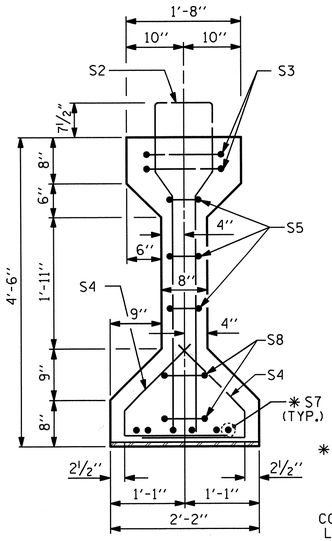

SECTION B-B

✱ FOR S7 BARS, SEE DETAIL "A" OF PRESTRESSED CONCRETE GIRDER CONTINUOUS FOR LIVE LOAD DETAILS SHEET

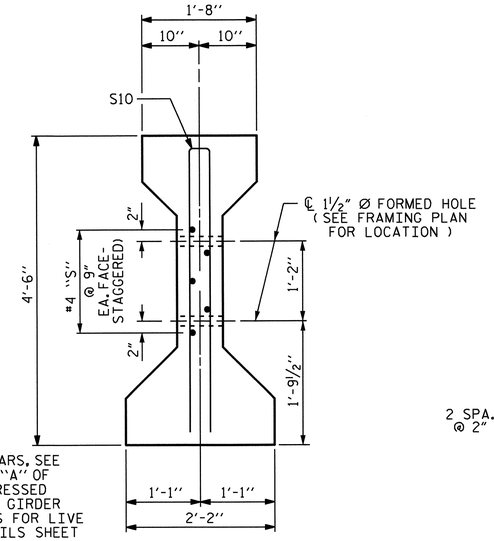

SECTION C-C

(S1 BARS NOT SHOWN)

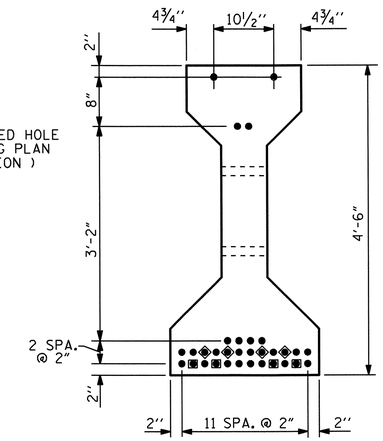

AT END & ℄ OF GIRDER

0.6" Ø LOW RELAXATION STRAND LAYOUT

	GIRDER DIMENSIONS		
	DIM. A	DIM. B	DIM. C
GIRDER #1	80'-8¾"	40'-4⅜"	6⅞"
GIRDER #2	80'-10⅜"	40'-5 3/16"	7 11/16"
GIRDER #3	81'-0"	40'-6"	8½"
GIRDER #4	81'-1⅝"	40'-6 13/16"	9 5/16"

DEBONDING LEGEND

- ● FULLY BONDED STRANDS
- ■ STRANDS DEBONDED FOR 10'-8½" FROM ENDS OF GIRDER
- ◆ STRANDS DEBONDED FOR 8'-8½" FROM ENDS OF GIRDER

0.6" Ø L. R. GRADE 270 STRANDS		
AREA (SQUARE INCHES)	ULTIMATE STRENGTH (LBS. PER STRAND)	APPLIED PRESTRESS (LBS. PER STRAND)
0.217	58,600	43,950

REINFORCING STEEL FOR ONE GIRDER

	BAR	NUMBER	SIZE	TYPE	LENGTH	WEIGHT
	S1	105	#5	1	10'-11"	1196
	S2	12	#6	1	10'-11"	197
	S3	4	#4	2	9'-1"	24
	S4	68	#4	3	3'-5"	155
	S5	6	#4	2	8'-5"	34
	S6	1	#4	2	9'-11"	7
	✱ S7	6	#5	STR	3'-8"	23
	S8	4	#4	2	8'-7"	23
	S9	1	#3	STR	1'-10"	1
EXTERIOR GDR.	S10	2	#5	2	8'-8"	18
INTERIOR GDR.	S10	4	#5	2	8'-8"	36
EXTERIOR GDR.	S11	5	#4	STR	7'-0"	23
INTERIOR GDR.	S12	5	#4	STR	17'-6"	58

✱ NOTE: S7 BARS SHALL BE BENT BEFORE SHIPMENT. HEAT BENDING SHALL NOT BE ALLOWED.

BAR TYPES

ALL BAR DIMENSIONS ARE OUT-TO-OUT

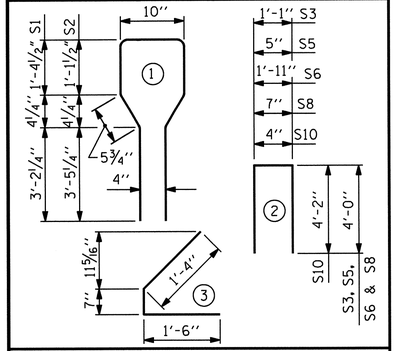

QUANTITIES FOR ONE GIRDER

	REINFORCING STEEL	6000 PSI CONCRETE	0.6" Ø L.R. STRANDS
	LB.	C.Y.	No.
GIRDER #1	1701	16.4	32
GIRDER #2	1754	16.4	32
GIRDER #3	1754	16.4	32
GIRDER #4	1701	16.5	32
TOTAL	6910	65.7	128

GIRDERS REQUIRED

SPAN A	NUMBER	LENGTH
GIRDER #1	1	80'-8¾"
GIRDER #2	1	80'-10⅜"
GIRDER #3	1	81'-0"
GIRDER #4	1	81'-1⅝"
TOTAL	4	323'-8¾"

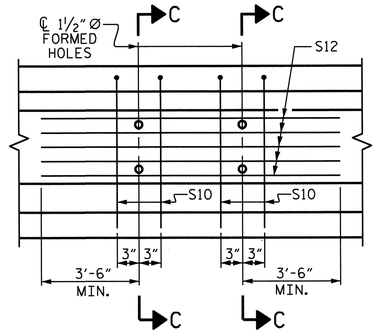

PARTIAL ELEVATION

SHOWING INTERMEDIATE DIAPHRAGM REINFORCING STEEL FOR INTERIOR GIRDERS

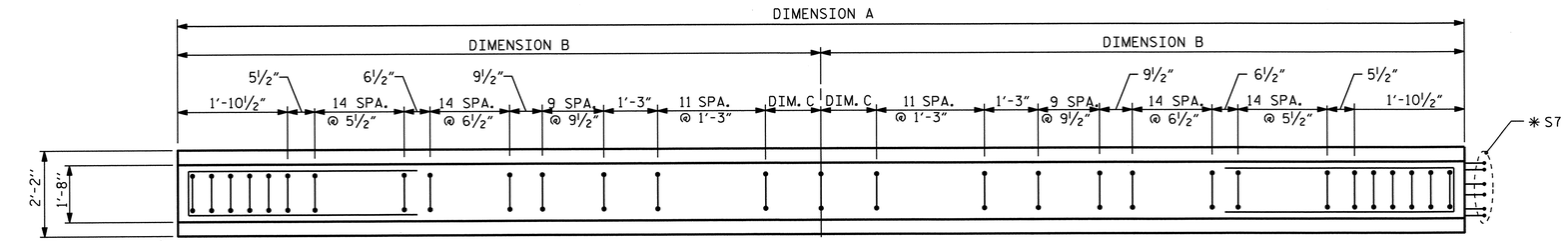

PLAN OF GIRDER

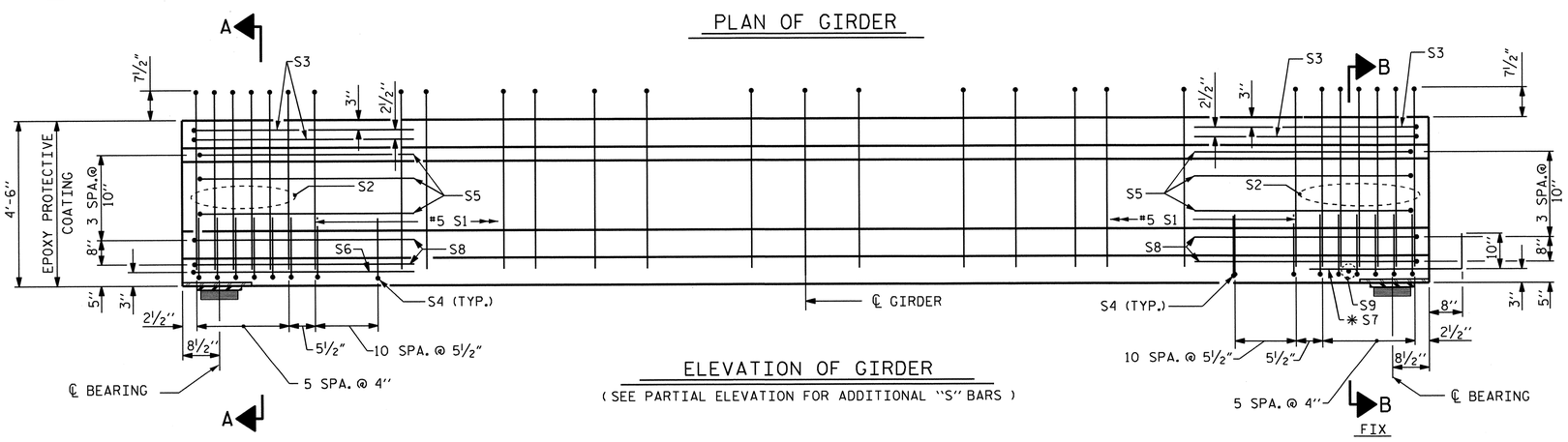

ELEVATION OF GIRDER

(SEE PARTIAL ELEVATION FOR ADDITIONAL "S" BARS)

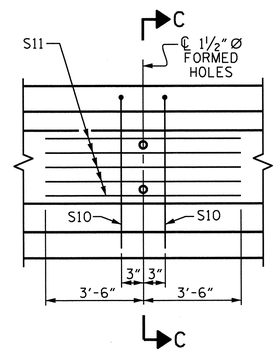

PARTIAL ELEVATION

SHOWING INTERMEDIATE DIAPHRAGM REINFORCING STEEL FOR EXTERIOR GIRDER

PROJECT NO. R2707B

CLEVELAND COUNTY

STATION: 340+70.00-L-

SHEET 1 OF 6

STATE OF NORTH CAROLINA
DEPARTMENT OF TRANSPORTATION
RALEIGH

AASHTO TYPE IV PRESTRESSED CONCRETE GIRDER CONTINUOUS FOR LIVE LOAD (LEFT LANE) (SPAN A)

NORTH CAROLINA PROFESSIONAL SEAL 15825 ENGINEER BRUCE D. KLAPPENBACH
6-27-2013

ASSEMBLED BY : H. T. BARBOUR DATE : 8-16-11
CHECKED BY : D. A. GLADDEN DATE : 12-11

DRAWN BY : ELR 8/91	REV. 7/17/98 RWW/LES
CHECKED BY : GRP 8/91	REV. 10/17/00R RWW/LES
	REV. 5/1/06R TLA/GM

DESIGN ENGINEER OF RECORD: B. A. DUKE DATE : 5-13

REVISIONS

NO.	BY:	DATE:	NO.	BY:	DATE:
1			3		
2			4		

SHEET NO. S-145

TOTAL SHEETS 266

STR. #5

STD. NO. PCG6 (Sht. 1)

14-MAY-2013 08:54
K:\Structures\Plans\Bailey\STR5and6\TBARBOUR\Microstation\LEFT LANE\SUPERSTRUCTURE\R2707B_SD_G*.dgn
tbarbour

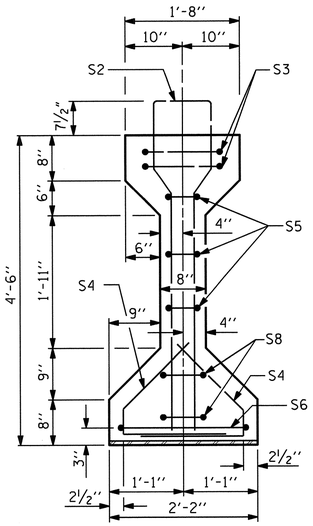

SECTION A-A

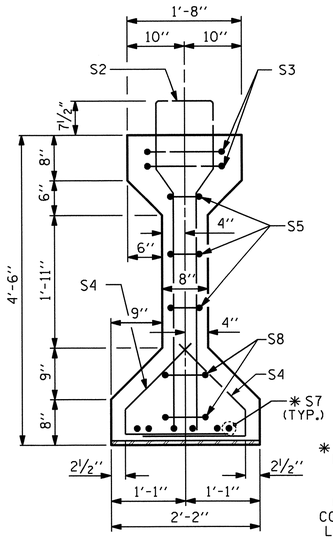

SECTION B-B

✱ FOR S7 BARS, SEE DETAIL "A" OF PRESTRESSED CONCRETE GIRDER CONTINUOUS FOR LIVE LOAD DETAILS SHEET

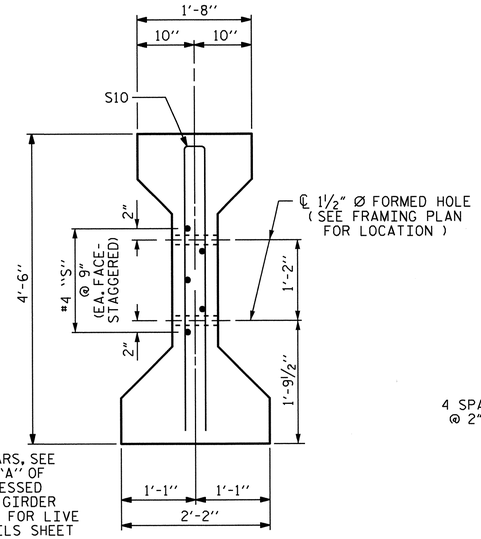

SECTION C-C

(S1 BARS NOT SHOWN)

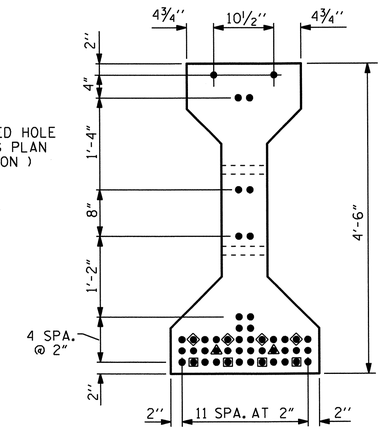

AT END & ℄ OF GIRDER

0.6" Ø LOW RELAXATION STRAND LAYOUT

	GIRDER DIMENSIONS		
	DIM. A	DIM. B	DIM. C
GIRDER #1	93'-7"	46'-9½"	1'-5½"
GIRDER #2	93'-9"	46'-10½"	1'-6½"
GIRDER #3	93'-11"	46'-11½"	1'-7½"
GIRDER #4	94'-1⅛"	47'-0 9/16"	1'-8 9/16"

DEBONDING LEGEND

- ● FULLY BONDED STRANDS
- ■ STRANDS DEBONDED FOR 14'-8½" FROM ENDS OF GIRDER
- ▲ STRANDS DEBONDED FOR 12'-8½" FROM ENDS OF GIRDER
- ◆ STRANDS DEBONDED FOR 10'-8½" FROM ENDS OF GIRDER

0.6" Ø L. R. GRADE 270 STRANDS

AREA (SQUARE INCHES)	ULTIMATE STRENGTH (LBS. PER STRAND)	APPLIED PRESTRESS (LBS. PER STRAND)
0.217	58,600	43,950

REINFORCING STEEL FOR ONE GIRDER

	BAR	NUMBER	SIZE	TYPE	LENGTH	WEIGHT
	S1	137	#5	1	10'-11"	1560
	S2	9	#6	1	10'-11"	148
	S3	4	#4	2	9'-1"	24
	S4	76	#4	3	3'-5"	173
	S5	6	#4	2	8'-5"	34
	S6	1	#4	2	9'-11"	7
	✱ S7	6	#5	STR	3'-8"	23
	S8	4	#4	2	8'-7"	23
	S9	1	#3	STR	1'-10"	1
EXTERIOR GDR.	S10	2	#5	2	8'-8"	18
INTERIOR GDR.	S10	4	#5	2	8'-8"	36
EXTERIOR GDR.	S11	5	#4	STR	7'-0"	23
INTERIOR GDR.	S12	5	#4	STR	17'-10"	60
	S13	6	#6	STR	3'-9"	34

✱ NOTE: S7 BARS SHALL BE BENT BEFORE SHIPMENT. HEAT BENDING SHALL NOT BE ALLOWED.

BAR TYPES

ALL BAR DIMENSIONS ARE OUT-TO-OUT

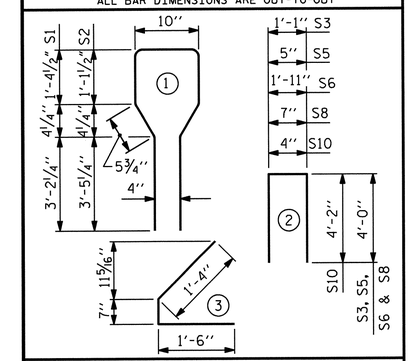

QUANTITIES FOR ONE GIRDER

	REINFORCING STEEL LB.	8000 PSI CONCRETE C.Y.	0.6" Ø L.R. STRANDS No.
GIRDER #1	2068	19.0	48
GIRDER #2	2123	19.0	48
GIRDER #3	2123	19.1	48
GIRDER #4	2068	19.1	48
TOTAL	8382	76.2	192

GIRDERS REQUIRED

SPAN B	NUMBER	LENGTH
GIRDER #1	1	93'-7"
GIRDER #2	1	93'-9"
GIRDER #3	1	93'-11"
GIRDER #4	1	94'-1⅛"
TOTAL	4	375'-4⅛"

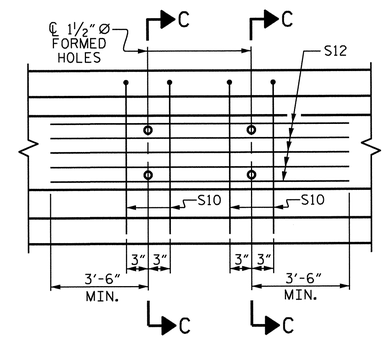

PARTIAL ELEVATION

SHOWING INTERMEDIATE DIAPHRAGM REINFORCING STEEL FOR INTERIOR GIRDERS

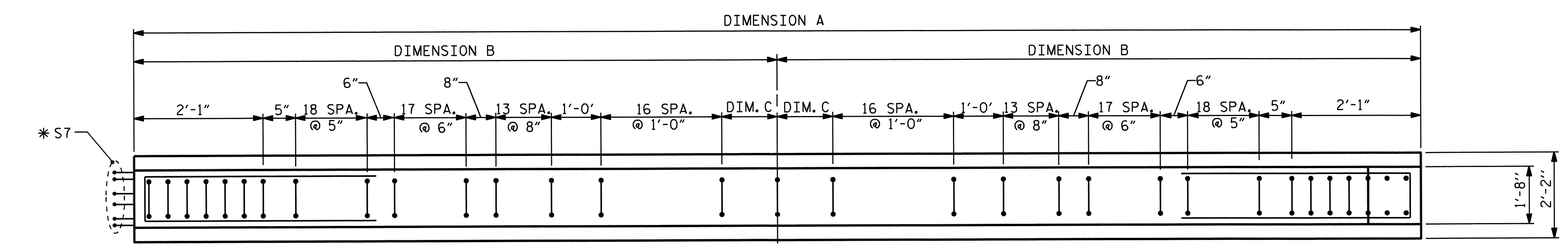

PLAN OF GIRDER

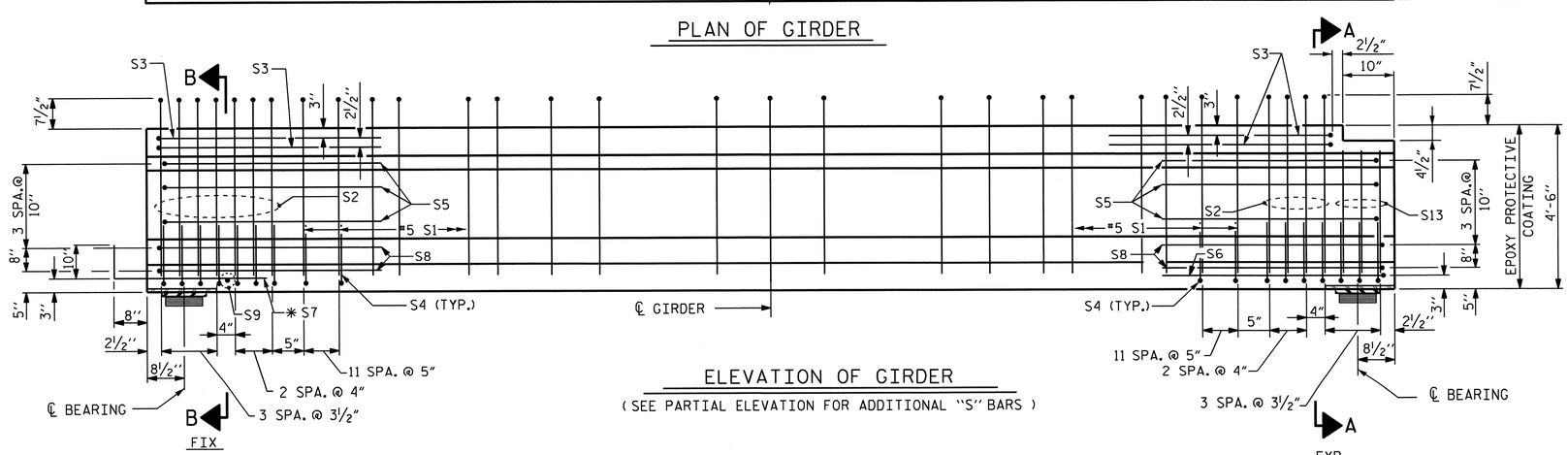

ELEVATION OF GIRDER

(SEE PARTIAL ELEVATION FOR ADDITIONAL "S" BARS)

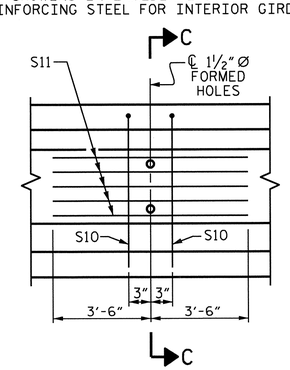

PARTIAL ELEVATION

SHOWING INTERMEDIATE DIAPHRAGM REINFORCING STEEL FOR EXTERIOR GIRDER

PROJECT NO. R2707B

CLEVELAND COUNTY

STATION: 340+70.00-L-

SHEET 2 OF 6

STATE OF NORTH CAROLINA
DEPARTMENT OF TRANSPORTATION
RALEIGH

AASHTO TYPE IV PRESTRESSED CONCRETE GIRDER CONTINUOUS FOR LIVE LOAD (LEFT LANE) (SPAN B)

NORTH CAROLINA PROFESSIONAL SEAL 15825 ENGINEER BRUCE D. KLAPPENBACH 6-27-2012

REVISIONS						SHEET NO.
NO.	BY:	DATE:	NO.	BY:	DATE:	S-146
1			3			TOTAL SHEETS
2			4			266

ASSEMBLED BY : H. T. BARBOUR	DATE : 8-18-11			
CHECKED BY : D. A. GLADDEN	DATE : 12-11			
DRAWN BY : ELR 8/91	REV. 7/17/98	RWW/LES	DESIGN ENGINEER OF RECORD: B. A. DUKE DATE : 5-13	
CHECKED BY : GRP 8/91	REV. 10/17/00R	RWW/LES		
	REV. 5/1/06R	TLA/GM		

24-JUN-2013 09:41
K:\Structures\Plans\Bailey\STR5and6\TBARBOUR\Microstation\LEFT LANE\SUPERSTRUCTURE\R2707B_SD_G*.dgn
tbarbour

STR. #5

STD. NO. PCG6 (Sht. 1)

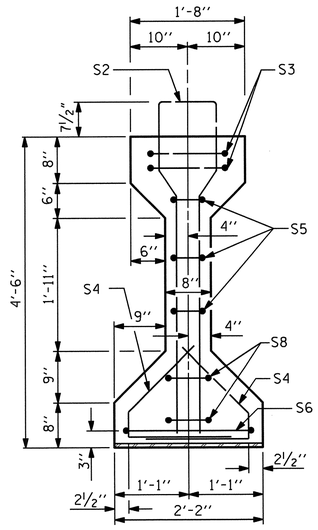

SECTION A-A

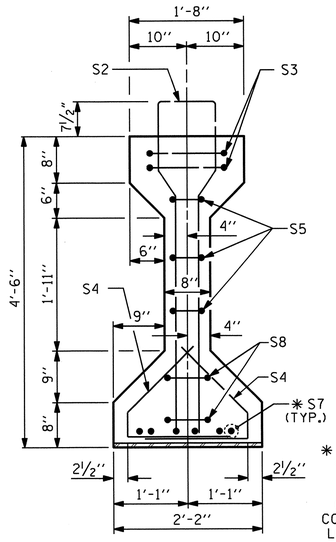

SECTION B-B

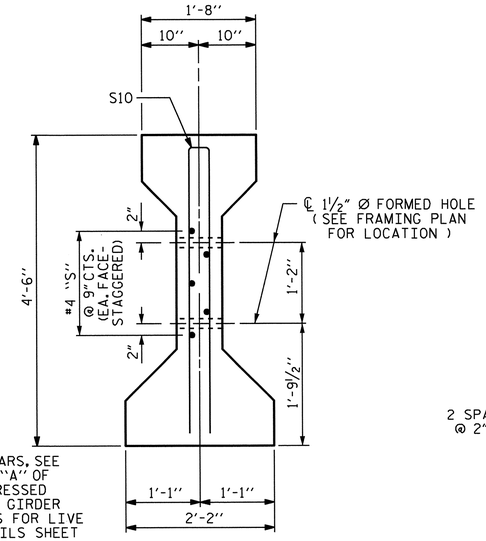

✱ FOR S7 BARS, SEE DETAIL "A" OF PRESTRESSED CONCRETE GIRDER CONTINUOUS FOR LIVE LOAD DETAILS SHEET

SECTION C-C

(S1 BARS NOT SHOWN)

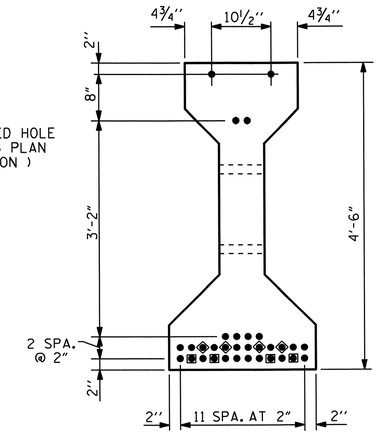

AT END & ℄ OF GIRDER

0.6" Ø LOW RELAXATION STRAND LAYOUT

	GIRDER DIMENSIONS		
	DIM. A	DIM. B	DIM. C
GIRDER #1	81'-1¾"	40'-6⅞"	9⅜"
GIRDER #2	81'-3⅝"	40'-7 13/16"	10 5/16"
GIRDER #3	81'-5½"	40'-8¾"	11¼"
GIRDER #4	81'-7⅜"	40'-9 11/16"	1'-0 3/16"

DEBONDING LEGEND

- ● FULLY BONDED STRANDS
- ■ STRANDS DEBONDED FOR 10'-8½" FROM ENDS OF GIRDER
- ◆ STRANDS DEBONDED FOR 8'-8½" FROM ENDS OF GIRDER

0.6" Ø L. R. GRADE 270 STRANDS

AREA (SQUARE INCHES)	ULTIMATE STRENGTH (LBS. PER STRAND)	APPLIED PRESTRESS (LBS. PER STRAND)
0.217	58,600	43,950

REINFORCING STEEL FOR ONE GIRDER

	BAR	NUMBER	SIZE	TYPE	LENGTH	WEIGHT
	S1	105	#5	1	10'-11"	1196
	S2	9	#6	1	10'-11"	148
	S3	4	#4	2	9'-1"	24
	S4	68	#4	3	3'-5"	155
	S5	6	#4	2	8'-5"	34
	S6	1	#4	2	9'-11"	7
	✱ S7	6	#5	STR	3'-8"	23
	S8	4	#4	2	8'-7"	23
	S9	1	#3	STR	1'-10"	1
EXTERIOR GDR.	S10	2	#5	2	8'-8"	18
INTERIOR GDR.	S10	4	#5	2	8'-8"	36
EXTERIOR GDR.	S11	5	#4	STR	7'-0"	23
INTERIOR GDR.	S12	5	#4	STR	18'-3"	61
	S13	6	#6	STR	3'-9"	34

✱ NOTE: S7 BARS SHALL BE BENT BEFORE SHIPMENT. HEAT BENDING SHALL NOT BE ALLOWED.

BAR TYPES

ALL BAR DIMENSIONS ARE OUT-TO-OUT

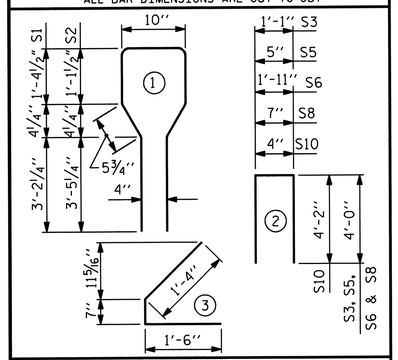

QUANTITIES FOR ONE GIRDER

	REINFORCING STEEL	6000 PSI CONCRETE	0.6" Ø L.R. STRANDS
	LB.	C.Y.	No.
GIRDER #1	1686	16.5	32
GIRDER #2	1742	16.5	32
GIRDER #3	1686	16.5	32
GIRDER #4	1742	16.6	32
TOTAL	6856	66.1	128

GIRDERS REQUIRED

SPAN C	NUMBER	LENGTH
GIRDER #1	1	81'-1¾"
GIRDER #2	1	81'-3⅝"
GIRDER #3	1	81'-5½"
GIRDER #4	1	81'-7⅜"
TOTAL	4	325'-6¼"

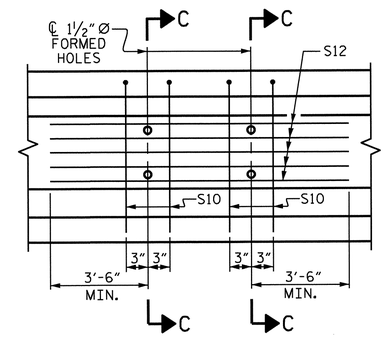

PARTIAL ELEVATION

SHOWING INTERMEDIATE DIAPHRAGM REINFORCING STEEL FOR INTERIOR GIRDERS

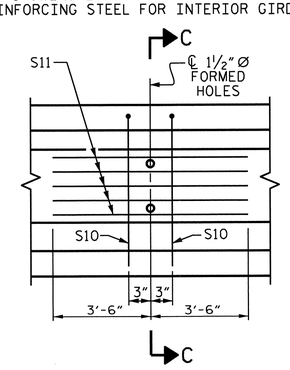

PARTIAL ELEVATION

SHOWING INTERMEDIATE DIAPHRAGM REINFORCING STEEL FOR EXTERIOR GIRDER

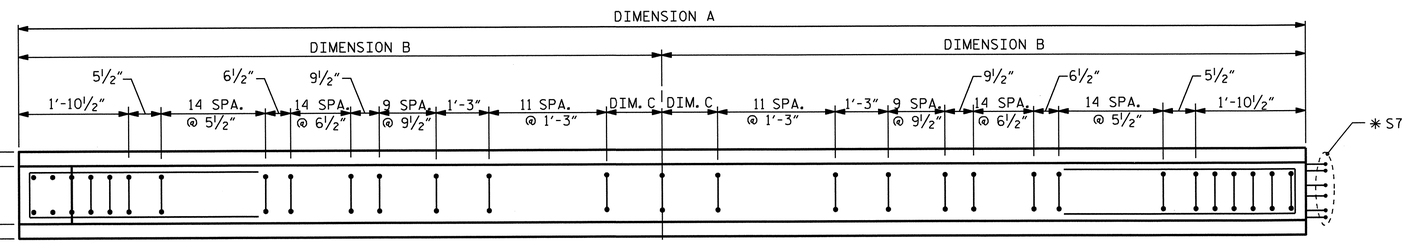

PLAN OF GIRDER

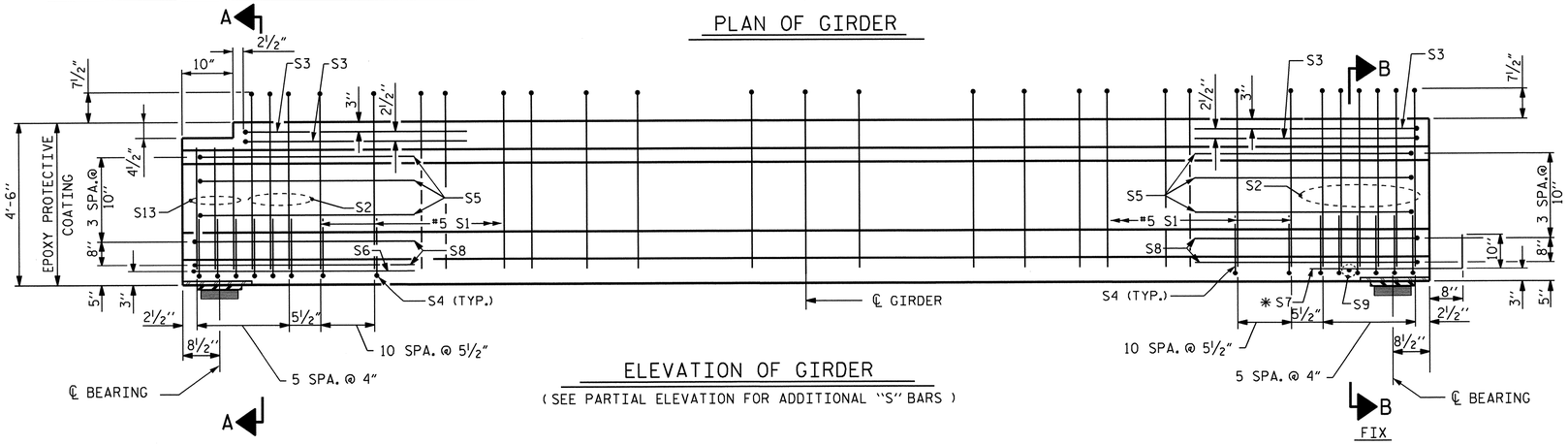

ELEVATION OF GIRDER

(SEE PARTIAL ELEVATION FOR ADDITIONAL "S" BARS)

PROJECT NO. R2707B

CLEVELAND COUNTY

STATION: 340+70.00-L-

SHEET 3 OF 6

STATE OF NORTH CAROLINA
DEPARTMENT OF TRANSPORTATION
RALEIGH

AASHTO TYPE IV PRESTRESSED CONCRETE GIRDER CONTINUOUS FOR LIVE LOAD (LEFT LANE) (SPAN C)

REVISIONS						SHEET NO.
NO.	BY:	DATE:	NO.	BY:	DATE:	S-147
1			3			TOTAL SHEETS
2			4			266

NORTH CAROLINA PROFESSIONAL SEAL 5825 ENGINEER BRIAN CLAY KLAPPENBACH 6-21-2013

ASSEMBLED BY : H. T. BARBOUR	DATE : 8-18-11		
CHECKED BY : D. A. GLADDEN	DATE : 12-11		
DRAWN BY : ELR 8/91	REV. 7/17/98	RWW/LES	DESIGN ENGINEER OF RECORD: B. A. DUKE DATE : 5-13
CHECKED BY : GRP 8/91	REV. 10/17/00R	RWW/LES	
	REV. 5/1/06R	TLA/GM	

24-JUN-2013 09:43
K:\Structures\Plans\Bailey\STR5and6\TBARBOUR\Microstation\LEFT LANE\SUPERSTRUCTURE\R2707B_SD_G*.dgn
tbarbour

STR. #5

STD. NO. PCG6 (Sht. 1)

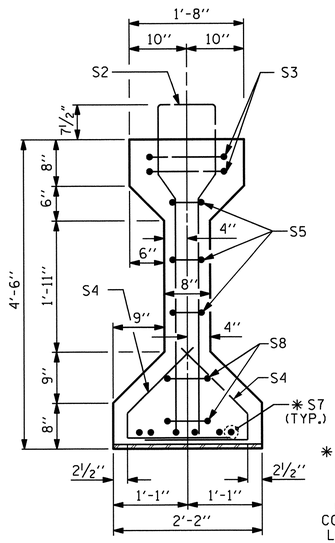

SECTION B-B

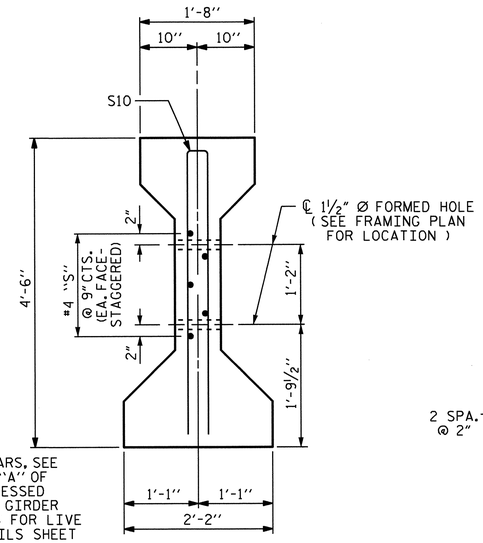

✱ FOR S7 BARS, SEE DETAIL "A" OF PRESTRESSED CONCRETE GIRDER CONTINUOUS FOR LIVE LOAD DETAILS SHEET

SECTION C-C

(S1 BARS NOT SHOWN)

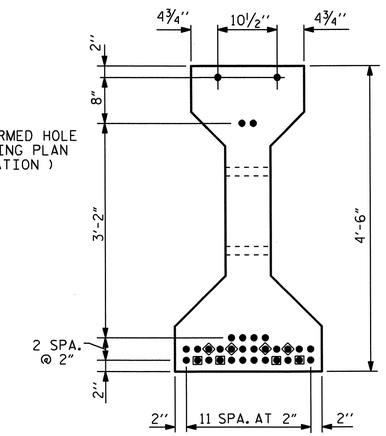

AT END & ℄ OF GIRDER

0.6" Ø LOW RELAXATION STRAND LAYOUT

	GIRDER DIMENSIONS		
	DIM. A	DIM. B	DIM. C
GIRDER #1	80'-10⅛"	40'-5 1/16"	7 9/16"
GIRDER #2	81'-0⅛"	40'-6 1/16"	8 9/16"
GIRDER #3	81'-2⅛'	40'-7 1/16"	9 9/16"
GIRDER #4	81'-4⅛"	40'-8 1/16"	10 9/16"

DEBONDING LEGEND

- ● FULLY BONDED STRANDS
- ■ STRANDS DEBONDED FOR 10'-8½" FROM ENDS OF GIRDER
- ◆ STRANDS DEBONDED FOR 8'-8½" FROM ENDS OF GIRDER

0.6" Ø L. R. GRADE 270 STRANDS		
AREA (SQUARE INCHES)	ULTIMATE STRENGTH (LBS. PER STRAND)	APPLIED PRESTRESS (LBS. PER STRAND)
0.217	58,600	43,950

REINFORCING STEEL FOR ONE GIRDER

	BAR	NUMBER	SIZE	TYPE	LENGTH	WEIGHT
	S1	105	#5	1	10'-11"	1196
	S2	12	#6	1	10'-11"	197
	S3	4	#4	2	9'-1"	24
	S4	68	#4	3	3'-5"	155
	S5	6	#4	2	8'-5"	34
	✱ S7	12	#5	STR	3'-8"	46
	S8	4	#4	2	8'-7"	23
	S9	2	#3	STR	1'-10"	1
EXTERIOR GDR.	S10	2	#5	2	8'-8"	18
INTERIOR GDR.	S10	4	#5	2	8'-8"	36
EXTERIOR GDR.	S11	5	#4	STR	7'-0"	23
INTERIOR GDR.	S12	5	#4	STR	18'-7"	62

✱ NOTE: S7 BARS SHALL BE BENT BEFORE SHIPMENT. HEAT BENDING SHALL NOT BE ALLOWED.

BAR TYPES

ALL BAR DIMENSIONS ARE OUT-TO-OUT

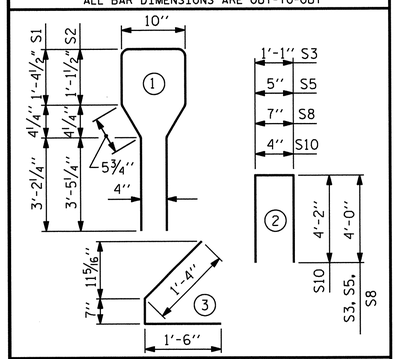

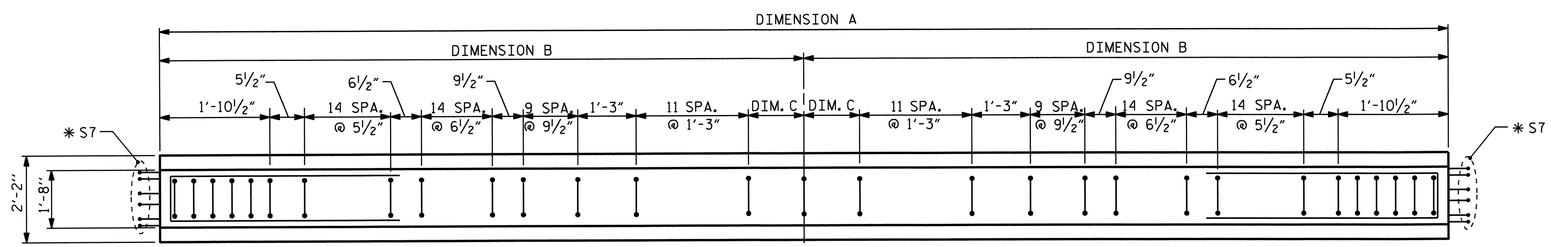

PLAN OF GIRDER

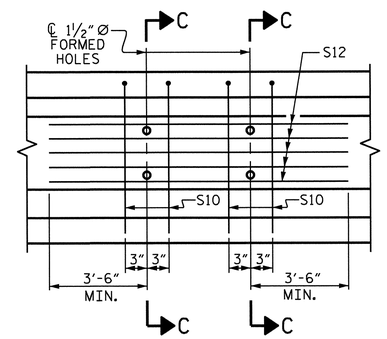

PARTIAL ELEVATION

SHOWING INTERMEDIATE DIAPHRAGM REINFORCING STEEL FOR INTERIOR GIRDERS

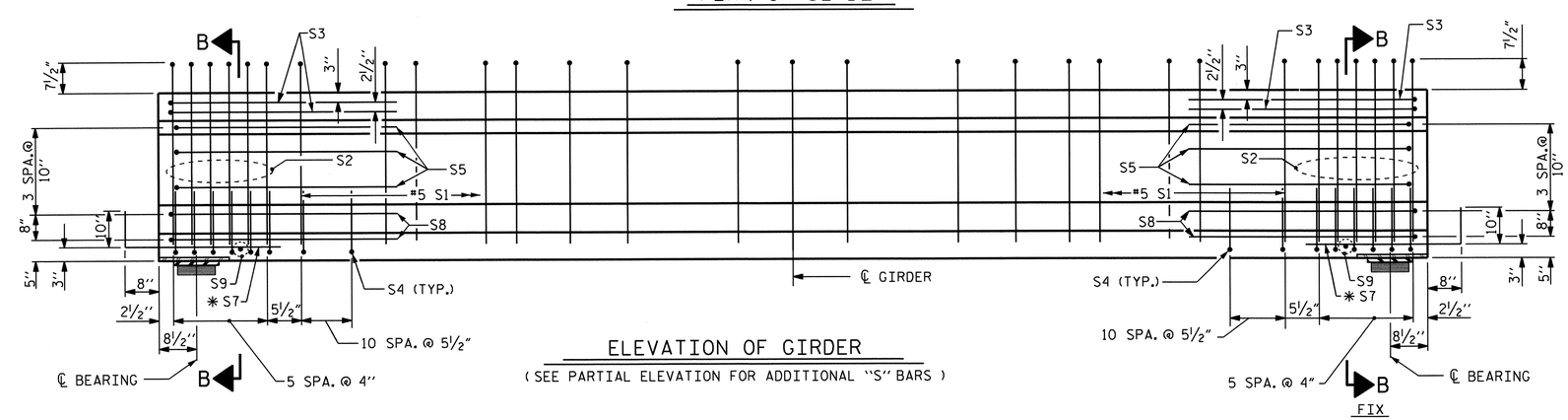

ELEVATION OF GIRDER

(SEE PARTIAL ELEVATION FOR ADDITIONAL "S" BARS)

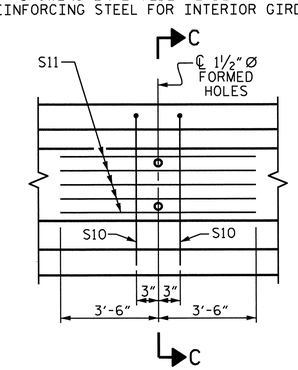

PARTIAL ELEVATION

SHOWING INTERMEDIATE DIAPHRAGM REINFORCING STEEL FOR EXTERIOR GIRDER

QUANTITIES FOR ONE GIRDER

	REINFORCING STEEL LB.	6000 PSI CONCRETE C.Y.	0.6" Ø L.R. STRANDS No.
GIRDER #1	1717	16.4	32
GIRDER #2	1774	16.4	32
GIRDER #3	1774	16.5	32
GIRDER #4	1717	16.5	32
TOTAL	6982	65.8	128

GIRDERS REQUIRED

SPAN D	NUMBER	LENGTH
GIRDER #1	1	80'-10⅛"
GIRDER #2	1	81'-0⅛"
GIRDER #3	1	81'-2⅛'
GIRDER #4	1	81'-4⅛"
TOTAL	4	324'-4½"

PROJECT NO. R2707B

CLEVELAND COUNTY

STATION: 340+70.00-L-

SHEET 4 OF 6

STATE OF NORTH CAROLINA
DEPARTMENT OF TRANSPORTATION
RALEIGH

AASHTO TYPE IV PRESTRESSED CONCRETE GIRDER CONTINUOUS FOR LIVE LOAD (LEFT LANE) (SPAN D)

NORTH CAROLINA PROFESSIONAL SEAL 15825 ENGINEER BRIAN D. KLAPPENBACH
6-27-2013

REVISIONS								SHEET NO. S-148
NO.	BY:	DATE:	NO.	BY:	DATE:			TOTAL SHEETS 266
1			3					
2			4					

ASSEMBLED BY : H. T. BARBOUR	DATE : 8-18-11		
CHECKED BY : D. A. GLADDEN	DATE : 12-11		
DRAWN BY : ELR 8/91	REV. 7/17/98 RWW/LES	DESIGN ENGINEER OF RECORD: B. A. DUKE DATE : 5-13	
CHECKED BY : GRP 8/91	REV. 10/17/00R RWW/LES		
	REV. 5/1/06R TLA/GM		

14-MAY-2013 08:54
K:\Structures\Plans\Bailey\STR5and6\TBARBOUR\Microstation\LEFT LANE\SUPERSTRUCTURE\R2707B_SD_G*.dgn
tbarbour

STR. #5

STD. NO. PCG6 (Sht. 1)

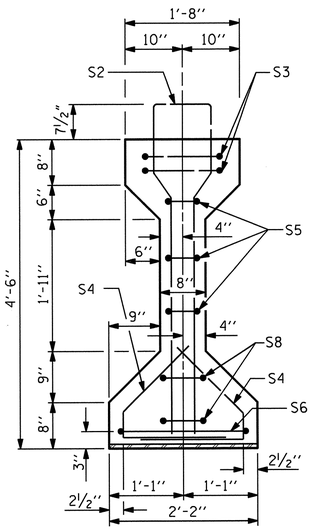

SECTION A-A

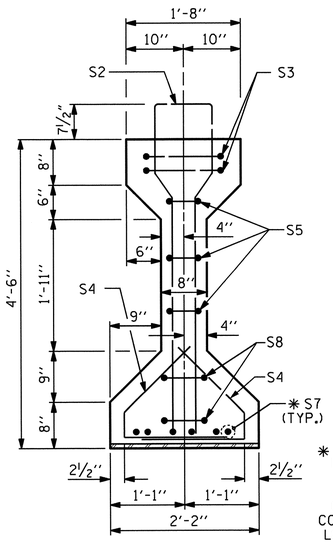

SECTION B-B

* FOR S7 BARS, SEE DETAIL "A" OF PRESTRESSED CONCRETE GIRDER CONTINUOUS FOR LIVE LOAD DETAILS SHEET

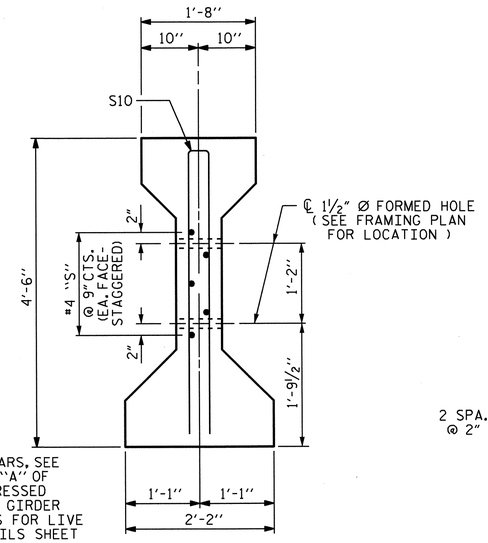

SECTION C-C

(S1 BARS NOT SHOWN)

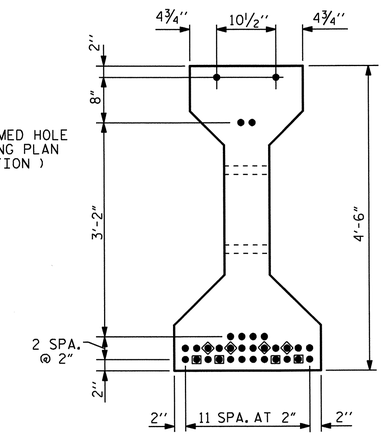

AT END & ℄ OF GIRDER

0.6" Ø LOW RELAXATION STRAND LAYOUT

	GIRDER DIMENSIONS		
	DIM. A	DIM. B	DIM. C
GIRDER #1	80'-3¾"	40'-1⅞"	4⅜"
GIRDER #2	80'-5¾"	40'-2⅞"	5⅜"
GIRDER #3	80'-7⅞"	40'-3 15/16"	6 7/16"
GIRDER #4	80'-10"	40'-5"	7½"

DEBONDING LEGEND

- ● FULLY BONDED STRANDS
- ■ STRANDS DEBONDED FOR 10'-8½" FROM ENDS OF GIRDER
- ◆ STRANDS DEBONDED FOR 8'-8½" FROM ENDS OF GIRDER

0.6" Ø L. R. GRADE 270 STRANDS					
AREA (SQUARE INCHES)		ULTIMATE STRENGTH (LBS. PER STRAND)		APPLIED PRESTRESS (LBS. PER STRAND)	
0.217		58,600		43,950	
REINFORCING STEEL FOR ONE GIRDER					
BAR	NUMBER	SIZE	TYPE	LENGTH	WEIGHT
S1	105	#5	1	10'-11"	1196
S2	12	#6	1	10'-11"	197
S3	4	#4	2	9'-1"	24
S4	68	#4	3	3'-5"	155
S5	6	#4	2	8'-5"	34
S6	1	#4	2	9'-11"	7
* S7	6	#5	STR	3'-8"	23
S8	4	#4	2	8'-7"	23
S9	1	#3	STR	1'-10"	1
EXTERIOR GDR. S10	2	#5	2	8'-8"	18
INTERIOR GDR. S10	4	#5	2	8'-8"	36
EXTERIOR GDR. S11	5	#4	STR	7'-0"	23
INTERIOR GDR. S12	5	#4	STR	18'-10"	63

* NOTE: S7 BARS SHALL BE BENT BEFORE SHIPMENT. HEAT BENDING SHALL NOT BE ALLOWED.

BAR TYPES

ALL BAR DIMENSIONS ARE OUT-TO-OUT

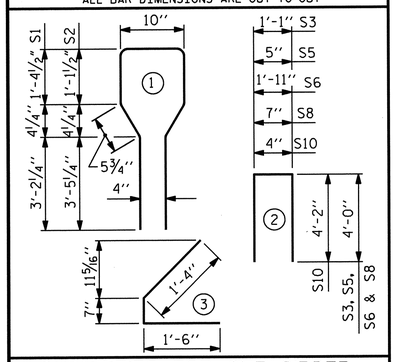

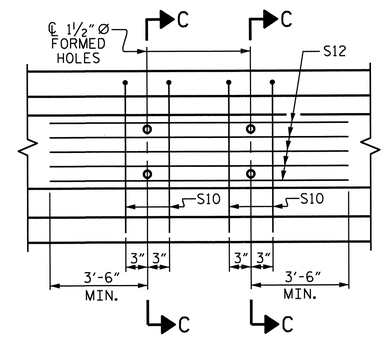

PARTIAL ELEVATION

SHOWING INTERMEDIATE DIAPHRAGM REINFORCING STEEL FOR INTERIOR GIRDERS

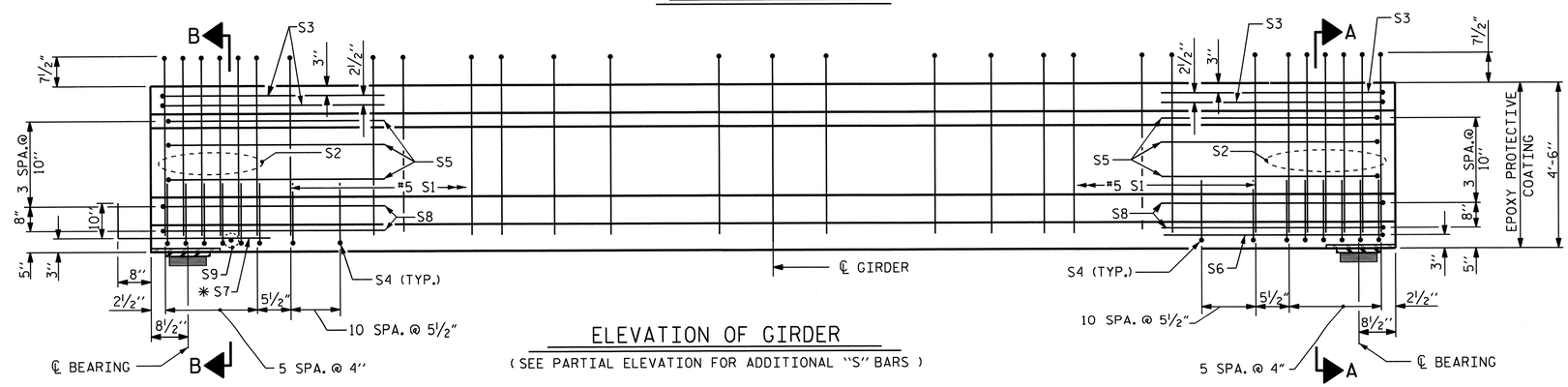

PLAN OF GIRDER

ELEVATION OF GIRDER

(SEE PARTIAL ELEVATION FOR ADDITIONAL "S" BARS)

FIX

EXP.

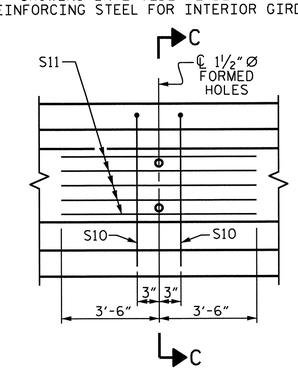

PARTIAL ELEVATION

SHOWING INTERMEDIATE DIAPHRAGM REINFORCING STEEL FOR EXTERIOR GIRDER

	REINFORCING STEEL	6000 PSI CONCRETE	0.6" Ø L.R. STRANDS
	LB.	C.Y.	No.
GIRDER #1	1701	16.3	32
GIRDER #2	1759	16.3	32
GIRDER #3	1759	16.4	32
GIRDER #4	1701	16.4	32
TOTAL	6920	65.4	128

QUANTITIES FOR ONE GIRDER

GIRDERS REQUIRED		
SPAN E	NUMBER	LENGTH
GIRDER #1	1	80'-3¾"
GIRDER #2	1	80'-5¾"
GIRDER #3	1	80'-7⅞"
GIRDER #4	1	80'-10"
TOTAL	4	322'-3⅜"

PROJECT NO. R-2707B

CLEVELAND COUNTY

STATION: 340+70.00-L-

SHEET 5 OF 6

STATE OF NORTH CAROLINA
DEPARTMENT OF TRANSPORTATION
RALEIGH

AASHTO TYPE IV
PRESTRESSED CONCRETE GIRDER
CONTINUOUS FOR LIVE LOAD
(LEFT LANE) (SPAN E)

NORTH CAROLINA PROFESSIONAL SEAL 15825 ENGINEER D. KLAPPENBACH
6-27-2013

REVISIONS						SHEET NO.
NO.	BY:	DATE:	NO.	BY:	DATE:	S-149
1			3			TOTAL SHEETS
2			4			266

ASSEMBLED BY : H. T. BARBOUR	DATE : 7-15-11			
CHECKED BY : D. A. GLADDEN	DATE : 12-11			
DRAWN BY : ELR 8/91	REV. 7/17/98	RWW/LES	DESIGN ENGINEER OF RECORD:	
CHECKED BY : GRP 8/91	REV. 10/17/00R	RWW/LES	B. A. DUKE	DATE : 5-13
	REV. 5/1/06R	TLA/GM		

24-JUN-2013 09:44
K:\Structures\Plans\Bailey\STR5and6\TBARBOUR\Microstation\LEFT LANE\SUPERSTRUCTURE\R2707B_SD_G*.dgn
tbarbour

STR. #5

STD. NO. PCG6 (Sht. 1)

DEAD LOAD DEFLECTION TABLE FOR GIRDERS

0.6" Ø LOW RELAXATION — SPAN A

SPAN A — GIRDER 1

TENTH POINTS	0	.1	.2	.3	.4	.5	.6	.7	.8	.9	0
CAMBER (GIRDER ALONE IN PLACE) ↑	0	0.078	0.147	0.201	0.235	0.247	0.235	0.201	0.147	0.078	0
* DEFLECTION DUE TO SUPERIMPOSED D.L. ↓	0	0.032	0.060	0.082	0.096	0.101	0.096	0.082	0.060	0.032	0
FINAL CAMBER ↑	0	9/16"	1 1/16"	1 7/16"	1 11/16"	1 3/4"	1 11/16"	1 7/16"	1 1/16"	9/16"	0

SPAN A — GIRDERS 2 & 3

TENTH POINTS	0	.1	.2	.3	.4	.5	.6	.7	.8	.9	0
CAMBER (GIRDER ALONE IN PLACE) ↑	0	0.078	0.147	0.202	0.236	0.248	0.236	0.202	0.147	0.078	0
* DEFLECTION DUE TO SUPERIMPOSED D.L. ↓	0	0.035	0.067	0.091	0.107	0.112	0.107	0.091	0.067	0.035	0
FINAL CAMBER ↑	0	1/2"	15/16"	1 5/16"	1 9/16"	1 5/8"	1 9/16"	1 5/16"	15/16"	1/2"	0

SPAN A — GIRDER 4

TENTH POINTS	0	.1	.2	.3	.4	.5	.6	.7	.8	.9	0
CAMBER (GIRDER ALONE IN PLACE) ↑	0	0.078	0.148	0.202	0.237	0.249	0.237	0.202	0.148	0.078	0
* DEFLECTION DUE TO SUPERIMPOSED D.L. ↓	0	0.032	0.061	0.083	0.097	0.102	0.097	0.083	0.061	0.032	0
FINAL CAMBER ↑	0	9/16"	1 1/16"	1 7/16"	1 11/16"	1 3/4"	1 11/16"	1 7/16"	1 1/16"	9/16"	0

0.6" Ø LOW RELAXATION — SPAN B

SPAN B — GIRDER 1

TENTH POINTS	0	.1	.2	.3	.4	.5	.6	.7	.8	.9	0
CAMBER (GIRDER ALONE IN PLACE) ↑	0	0.124	0.234	0.320	0.375	0.394	0.375	0.320	0.234	0.124	0
* DEFLECTION DUE TO SUPERIMPOSED D.L. ↓	0	0.050	0.095	0.130	0.152	0.160	0.152	0.130	0.095	0.050	0
FINAL CAMBER ↑	0	7/8"	1 11/16"	2 1/4"	2 11/16"	2 13/16"	2 11/16"	2 1/4"	1 11/16"	7/8"	0

SPAN B — GIRDERS 2 & 3

TENTH POINTS	0	.1	.2	.3	.4	.5	.6	.7	.8	.9	0
CAMBER (GIRDER ALONE IN PLACE) ↑	0	0.124	0.235	0.321	0.376	0.395	0.376	0.321	0.235	0.124	0
* DEFLECTION DUE TO SUPERIMPOSED D.L. ↓	0	0.056	0.106	0.145	0.170	0.178	0.170	0.145	0.106	0.056	0
FINAL CAMBER ↑	0	13/16"	1 9/16"	2 1/8"	2 1/2"	2 5/8"	2 1/2"	2 1/8"	1 9/16"	13/16"	0

SPAN B — GIRDER 4

TENTH POINTS	0	.1	.2	.3	.4	.5	.6	.7	.8	.9	0
CAMBER (GIRDER ALONE IN PLACE) ↑	0	0.124	0.235	0.322	0.377	0.396	0.377	0.322	0.235	0.124	0
* DEFLECTION DUE TO SUPERIMPOSED D.L. ↓	0	0.051	0.096	0.131	0.154	0.161	0.154	0.131	0.096	0.051	0
FINAL CAMBER ↑	0	7/8"	1 11/16"	2 5/16"	2 11/16"	2 13/16"	2 11/16"	2 5/16"	1 11/16"	7/8"	0

0.6" Ø LOW RELAXATION — SPAN C

SPAN C — GIRDER 1

TENTH POINTS	0	.1	.2	.3	.4	.5	.6	.7	.8	.9	0
CAMBER (GIRDER ALONE IN PLACE) ↑	0	0.078	0.148	0.202	0.237	0.249	0.237	0.202	0.148	0.078	0
* DEFLECTION DUE TO SUPERIMPOSED D.L. ↓	0	0.032	0.061	0.084	0.098	0.103	0.098	0.084	0.061	0.032	0
FINAL CAMBER ↑	0	9/16"	1 1/16"	1 7/16"	1 11/16"	1 3/4"	1 11/16"	1 7/16"	1 1/16"	9/16"	0

SPAN C — GIRDERS 2 & 3

TENTH POINTS	0	.1	.2	.3	.4	.5	.6	.7	.8	.9	0
CAMBER (GIRDER ALONE IN PLACE) ↑	0	0.078	0.148	0.203	0.238	0.250	0.238	0.203	0.148	0.078	0
* DEFLECTION DUE TO SUPERIMPOSED D.L. ↓	0	0.036	0.068	0.093	0.109	0.115	0.109	0.093	0.068	0.036	0
FINAL CAMBER ↑	0	1/2"	15/16"	1 5/16"	1 9/16"	1 5/8"	1 9/16"	1 5/16"	15/16"	1/2"	0

SPAN C — GIRDER 4

TENTH POINTS	0	.1	.2	.3	.4	.5	.6	.7	.8	.9	0
CAMBER (GIRDER ALONE IN PLACE) ↑	0	0.079	0.149	0.204	0.238	0.250	0.238	0.204	0.149	0.079	0
* DEFLECTION DUE TO SUPERIMPOSED D.L. ↓	0	0.033	0.062	0.085	0.099	0.104	0.099	0.085	0.062	0.033	0
FINAL CAMBER ↑	0	9/16"	1 1/16"	1 7/16"	1 11/16"	1 3/4"	1 11/16"	1 7/16"	1 1/16"	9/16"	0

0.6" Ø LOW RELAXATION — SPAN D

SPAN D — GIRDER 1

TENTH POINTS	0	.1	.2	.3	.4	.5	.6	.7	.8	.9	0
CAMBER (GIRDER ALONE IN PLACE) ↑	0	0.078	0.147	0.201	0.236	0.248	0.236	0.201	0.147	0.078	0
* DEFLECTION DUE TO SUPERIMPOSED D.L. ↓	0	0.032	0.060	0.082	0.096	0.101	0.096	0.082	0.060	0.032	0
FINAL CAMBER ↑	0	9/16"	1 1/16"	1 7/16"	1 11/16"	1 3/4"	1 11/16"	1 7/16"	1 1/16"	9/16"	0

SPAN D — GIRDERS 2 & 3

TENTH POINTS	0	.1	.2	.3	.4	.5	.6	.7	.8	.9	0
CAMBER (GIRDER ALONE IN PLACE) ↑	0	0.078	0.148	0.202	0.237	0.249	0.237	0.202	0.148	0.078	0
* DEFLECTION DUE TO SUPERIMPOSED D.L. ↓	0	0.036	0.067	0.092	0.108	0.113	0.108	0.092	0.067	0.036	0
FINAL CAMBER ↑	0	1/2"	15/16"	1 5/16"	1 9/16"	1 5/8"	1 9/16"	1 5/16"	15/16"	1/2"	0

SPAN D — GIRDER 4

TENTH POINTS	0	.1	.2	.3	.4	.5	.6	.7	.8	.9	0
CAMBER (GIRDER ALONE IN PLACE) ↑	0	0.078	0.148	0.203	0.238	0.249	0.238	0.203	0.148	0.078	0
* DEFLECTION DUE TO SUPERIMPOSED D.L. ↓	0	0.032	0.061	0.084	0.098	0.103	0.098	0.084	0.061	0.032	0
FINAL CAMBER ↑	0	9/16"	1 1/16"	1 7/16"	1 11/16'	1 3/4"	1 11/16'	1 7/16"	1 1/16"	9/16"	0

0.6" Ø LOW RELAXATION — SPAN E

SPAN E — GIRDER 1

TENTH POINTS	0	.1	.2	.3	.4	.5	.6	.7	.8	.9	0
CAMBER (GIRDER ALONE IN PLACE) ↑	0	0.077	0.146	0.200	0.234	0.246	0.234	0.200	0.146	0.077	0
* DEFLECTION DUE TO SUPERIMPOSED D.L. ↓	0	0.031	0.059	0.080	0.094	0.099	0.094	0.080	0.059	0.031	0
FINAL CAMBER ↑	0	9/16"	1 1/16"	1 7/16"	1 11/16"	1 3/4"	1 11/16"	1 7/16"	1 1/16"	9/16"	0

SPAN E — GIRDERS 2 & 3

TENTH POINTS	0	.1	.2	.3	.4	.5	.6	.7	.8	.9	0
CAMBER (GIRDER ALONE IN PLACE) ↑	0	0.078	0.147	0.201	0.235	0.247	0.235	0.201	0.147	0.078	0
* DEFLECTION DUE TO SUPERIMPOSED D.L. ↓	0	0.035	0.066	0.090	0.105	0.110	0.105	0.090	0.066	0.035	0
FINAL CAMBER ↑	0	1/2"	1"	1 5/16"	1 9/16"	1 5/8"	1 9/16"	1 5/16"	1"	1/2"	0

SPAN E — GIRDER 4

TENTH POINTS	0	.1	.2	.3	.4	.5	.6	.7	.8	.9	0
CAMBER (GIRDER ALONE IN PLACE) ↑	0	0.078	0.147	0.201	0.236	0.248	0.236	0.201	0.147	0.078	0
* DEFLECTION DUE TO SUPERIMPOSED D.L. ↓	0	0.032	0.060	0.082	0.096	0.100	0.096	0.082	0.060	0.032	0
FINAL CAMBER ↑	0	9/16"	1 1/16"	1 7/16"	1 11/16"	1 3/4"	1 11/16"	1 7/16"	1 1/16"	9/16"	0

* INCLUDES FUTURE WEARING SURFACE
ALL VALUES ARE SHOWN IN FEET (DECIMAL FORM), EXCEPT "FINAL CAMBER", WHICH IS GIVEN IN INCHES (FRACTION FORM).

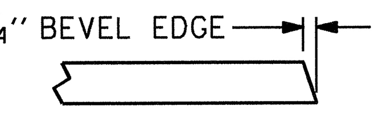

SECTION "G"

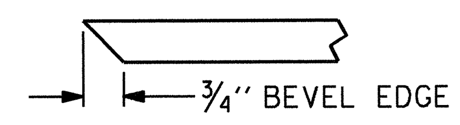

SECTION "F"
(SEE NOTES)

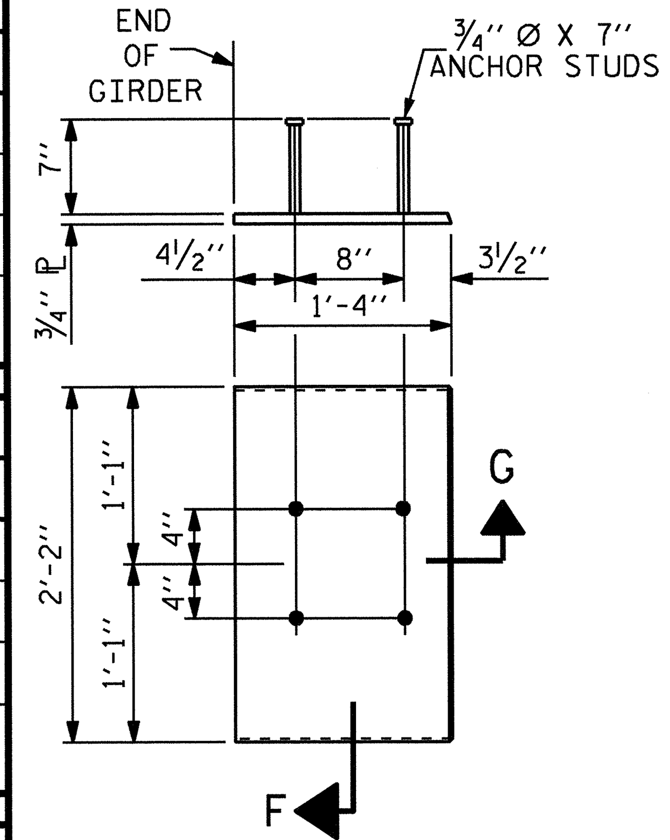

EMBEDDED PLATE "B-1" DETAILS FOR AASHTO TYPE IV GIRDER
(2 REQ'D PER GIRDER)

NOTES

ALL PRESTRESSING STRANDS SHALL BE 7-WIRE LOW-RELAXATION GRADE 270 STRANDS AND SHALL CONFORM TO AASHTO M203 EXCEPT FOR SAMPLING REQUIREMENTS WHICH SHALL BE IN ACCORDANCE WITH THE STANDARD SPECIFICATIONS.

ALL REINFORCING STEEL SHALL BE GRADE 60.

APPLY EPOXY PROTECTIVE COATING TO END OF GIRDER SURFACES INDICATED IN ELEVATION VIEW.

EMBEDDED PLATE "B-1" SHALL BE GALVANIZED IN ACCORDANCE WITH THE STANDARD SPECIFICATIONS. BEVEL EDGES OF PLATE "B-1" TO GIVE CLOSE FIT BUT NOT TIGHT FIT TO STEEL CASTING FORM.

ANCHOR STUDS SHALL CONFORM TO AASHTO M169 GRADES 1010 THROUGH 1020 OR APPROVED EQUAL, AND SHALL MEET THE TYPE "B" REQUIREMENTS OF SUBSECTION 7.3 OF THE ANSI/AASHTO/AWS D1.5 BRIDGE WELDING CODE.

AT ENDS OF GIRDERS TO BE EMBEDDED IN CONCRETE DIAPHRAGMS OR END WALLS, PRESTRESSING STRANDS MAY EXTEND A MAXIMUM OF 2" BEYOND THE GIRDER ENDS. OTHERWISE, PRESTRESSING STRANDS SHALL BE CUT FLUSH WITH THE GIRDER ENDS.

THE TRANSFER OF LOAD FROM THE ANCHORAGES TO THE GIRDER SHALL BE DONE WHEN CONCRETE HAS REACHED A COMPRESSIVE STRENGTH OF NOT LESS THAN 5400 PSI. FOR SPANS A, C, D AND E AND 7400 PSI. FOR SPAN B.

DEPENDING ON THE TYPE OF SYSTEM USED TO SUPPORT THE DECK SLAB FORMS, PRESET ANCHORS MAY BE NECESSARY IN THE PRESTRESSED CONCRETE GIRDER.

THE TOP SURFACE OF THE GIRDER, EXCLUDING THE OUTSIDE 4", SHALL BE RAKED TO A DEPTH OF 1/4".

THE CONTRACTOR HAS THE OPTION TO PROVIDE, AT NO ADDITIONAL COST TO THE DEPARTMENT, 2 ADDITIONAL STRANDS AT THE TOP OF THE GIRDER TO FACILITATE TYING OF THE REINFORCING STEEL. THESE STRANDS SHALL BE PULLED TO A LOAD OF 4500 lbs.

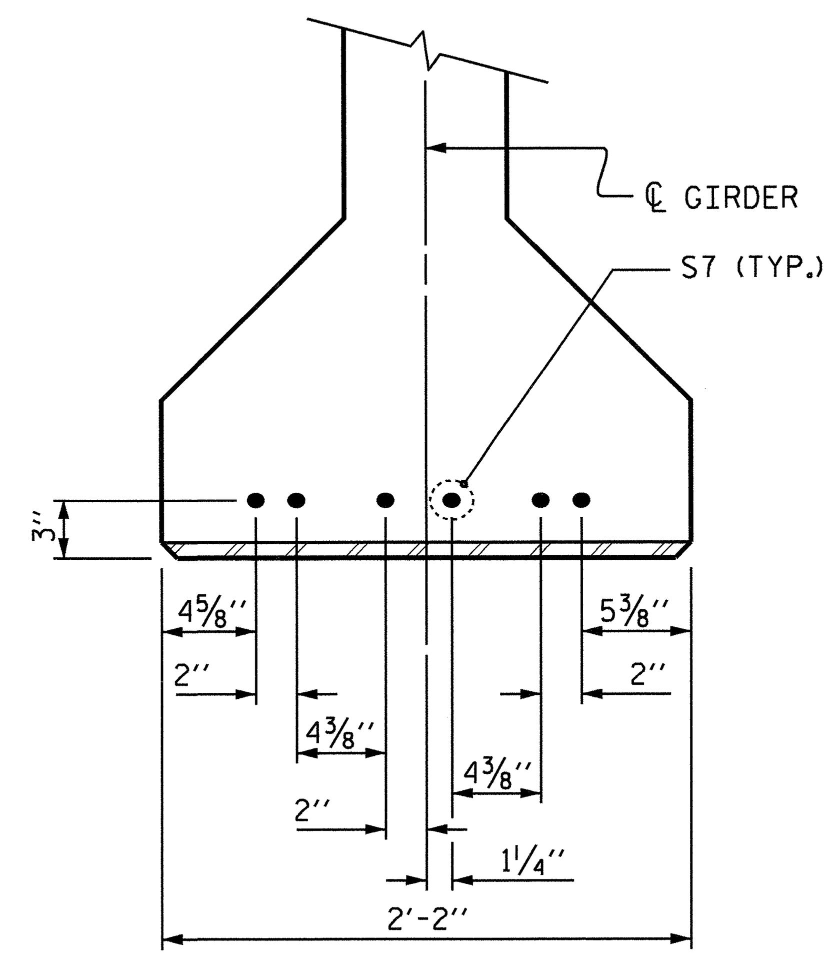

DETAIL "A"
(FOR AASHTO TYPE IV GIRDERS)

PROJECT NO. R-2707B
CLEVELAND COUNTY
STATION: 340+70.00-L-

SHEET 6 OF 6

STATE OF NORTH CAROLINA
DEPARTMENT OF TRANSPORTATION
RALEIGH

PRESTRESSED CONCRETE GIRDER CONTINUOUS FOR LIVE LOAD AND DEAD LOAD DEFLECTIONS DETAILS (LEFT LANE)

REVISIONS						SHEET NO.
NO.	BY:	DATE:	NO.	BY:	DATE:	S-150
1			3			TOTAL SHEETS 266
2			4			

ASSEMBLED BY : H. T. BARBOUR	DATE : 8-22-11	
CHECKED BY : D. A. GLADDEN	DATE : 12-11	
DRAWN BY : ELR 11/91	REV. 10/17/00 RWW/LES	DESIGN ENGINEER OF RECORD: B. A. DUKE DATE : 5-13
CHECKED BY : GRP 11/91	REV. 7/10/01RR LES/RDR	
	REV. 5/1/06 TLA/GM	

14-MAY-2013 08:53
K:\Structures\Plans\Bailey\STR5and6\TBARBOUR\Microstation\LEFT LANE\SUPERSTRUCTURE\R2707B_SD_G*.dgn
tbarbour

STR. #5

STD. NO. PCG11 (Sht. 3)

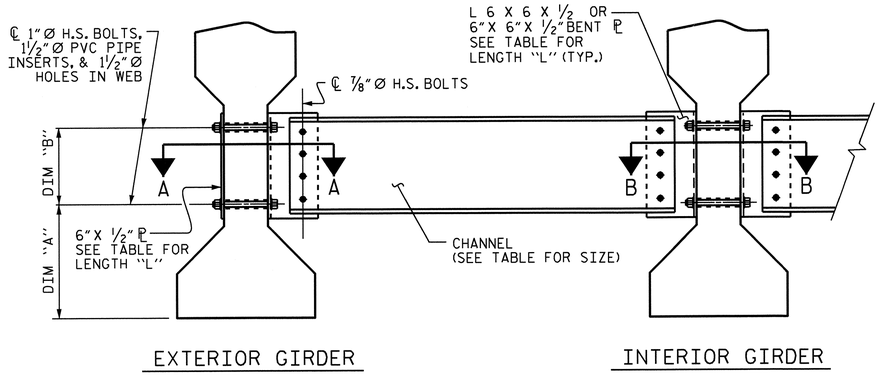

PART SECTION AT INTERMEDIATE DIAPHRAGM

(TYPE III OR TYPE IV GIRDER SHOWN)

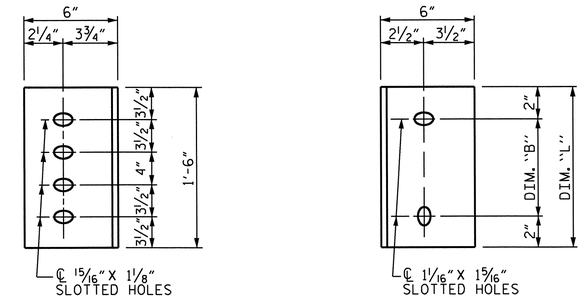

DIAPHRAGM FACE

(TYPE III OR TYPE IV GDR.)

WEB FACE

CONNECTOR PLATE DETAILS

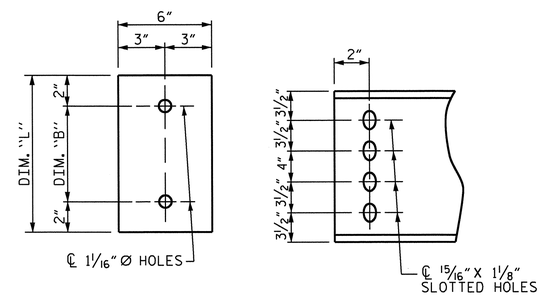

PLATE DETAILS

CHANNEL END

(TYPE III OR TYPE IV GDR.)

STRUCTURAL STEEL NOTES

ALL INTERMEDIATE DIAPHRAGM STEEL AND CONNECTOR PLATES SHALL BE AASHTO M270 GRADE 50 OR APPROVED EQUAL.

TENSION ON THE ASTM A325 BOLTS THROUGH THE CHANNEL MEMBER SHALL BE CALIBRATED USING DIRECT TENSION INDICATOR WASHERS IN ACCORDANCE WITH THE STANDARD SPECIFICATIONS.

TENSION ON THE ASTM A449 BOLTS THROUGH THE GIRDER WEB SHALL BE SNUG TIGHTENED FOLLOWED BY AN ADDITIONAL ¼ TURN.

THE PLATES, BENT PLATES, CHANNELS, AND ANGLES SHALL BE GALVANIZED OR METALLIZED IN ACCORDANCE WITH THE STANDARD SPECIFICATIONS. FOR THERMAL SPRAYED COATINGS (METALLIZATION), SEE SPECIAL PROVISIONS.

FOR METALLIZATION, APPLY AN 8 MIL THICK 99.99 PERCENT ZINC (W-Zn-1) THERMAL SPRAYED COATING WITH A 0.5 MIL THICK SEAL COAT TO ALL STEEL DIAPHRAGM SURFACES IN ACCORDANCE WITH THE THERMAL SPRAYED COATINGS SPECIAL PROVISION AND SECTION 442 OF THE STANDARD SPECIFICATIONS.

GALVANIZE THE HIGH STRENGTH BOLTS, NUTS, WASHERS AND DIRECT TENSION INDICATORS IN ACCORDANCE WITH THE STANDARD SPECIFICATIONS.

USE AN ASTM F436 HARDENED WASHER WITH STANDARD AND SLOTTED HOLES UNDER EACH BOLT HEAD AND NUT.

FOR BOLTS THROUGH THE GIRDER WEB, PROVIDE SUFFICIENT LENGTH OF THREADS ON ALL BOLTS TO ACCOMMODATE WASHERS AND THE THICKNESS OF CONNECTING MEMBER PLUS AT LEAST ¼" PROJECTION BEYOND THE NUT.

INTERMEDIATE DIAPHRAGM ASSEMBLY SHALL COMPLY WITH SECTION 1072 OF THE STANDARD SPECIFICATIONS.

SUBMIT TWO SETS OF WORKING DRAWINGS FOR THE INTERMEDIATE DIAPHRAGM ASSEMBLY FOR REVIEW, COMMENTS AND ACCEPTANCE. AFTER REVIEW, COMMENTS, AND ACCEPTANCE, SUBMIT SEVEN SETS FOR DISTRIBUTION.

IN THE EXTERIOR BAYS, PLACE TEMPORARY STRUTS BETWEEN PRESTRESSED GIRDERS ADJACENT TO THE STEEL DIAPHRAGMS. STRUTS SHALL REMAIN IN PLACE 3 DAYS AFTER CONCRETE IS PLACED.

THE COST OF THE STEEL DIAPHRAGMS AND ASSEMBLIES SHALL BE INCLUDED IN THE UNIT PRICE BID FOR PRESTRESSED CONCRETE GIRDERS.

TABLE

GIRDER TYPE	CHANNEL SIZE	DIM "A"	DIM "B"	DIM "L"
IV	MC 18 x 42.7	1'-9½"	1'-2"	1'-6"

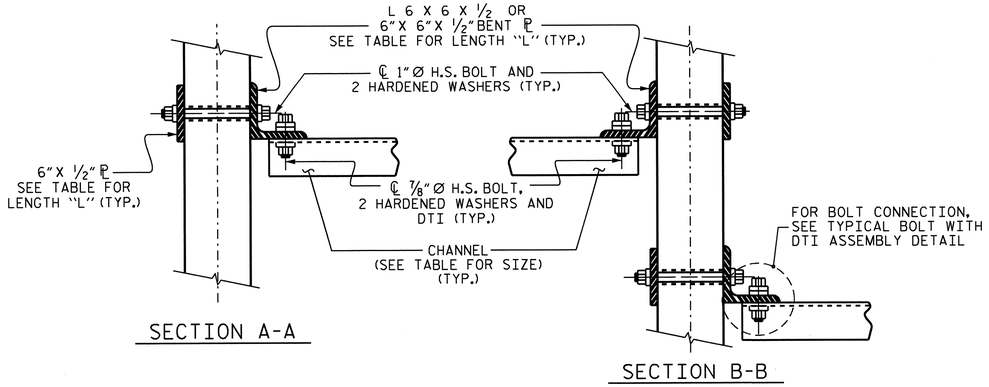

CONNECTION DETAILS

(FOR SKEW < 70° OR SKEW > 110°)

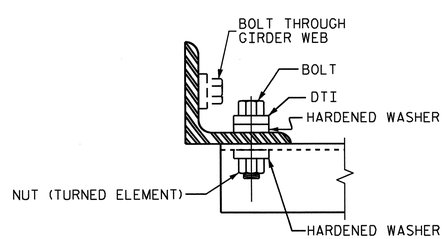

BOLT WITH DTI ASSEMBLY DETAIL

PROJECT NO. R-2707B

CLEVELAND COUNTY

STATION: 340+70.00 -L-

STATE OF NORTH CAROLINA
DEPARTMENT OF TRANSPORTATION
RALEIGH

INTERMEDIATE STEEL DIAPHRAGMS FOR TYPE IV PRESTRESSED CONCRETE GIRDERS (LEFT LANE)

NORTH CAROLINA PROFESSIONAL SEAL 15825 ENGINEER BRUCE D. KLAPPENBACH
6-27-2013

REVISIONS						SHEET NO.
NO.	BY:	DATE:	NO.	BY:	DATE:	S-151
1			3			TOTAL SHEETS
2			4			266

STR. #5 STD. NO. PCG10

DESIGN ENGINEER OF RECORD: B. A. DUKE		DATE : 5-13	
ASSEMBLED BY : H. T. BARBOUR		DATE : 8-16-11	
CHECKED BY : D. A. GLADDEN		DATE : 12-11	
DRAWN BY : TLA 6/05	ADDED 10/21/05		
CHECKED BY : VC 6/05	REV. 5/1/06RRR	KMM/GM	
	REV. 10/1/11	MAA/GM	

14-MAY-2013 08:53
K:\Structures\Plans\Bailey\STR5and6\TBARBOUR\Microstation\LEFT LANE\SUPERSTRUCTURE\R2707B_SD_G*.dgn
tbarbour

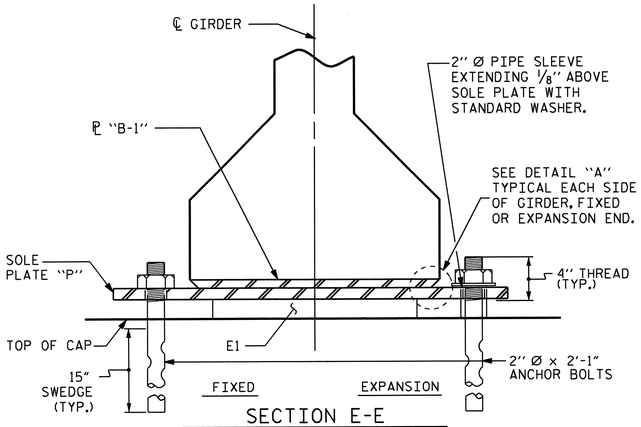

SECTION E-E

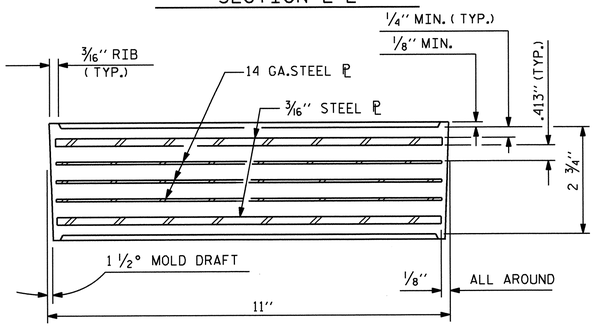

TYPICAL SECTION OF ELASTOMERIC BEARINGS

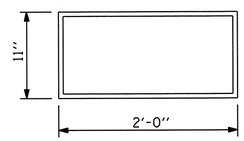

E1 (40 REQ'D)

PLAN VIEW OF ELASTOMERIC BEARING

TYPE VII

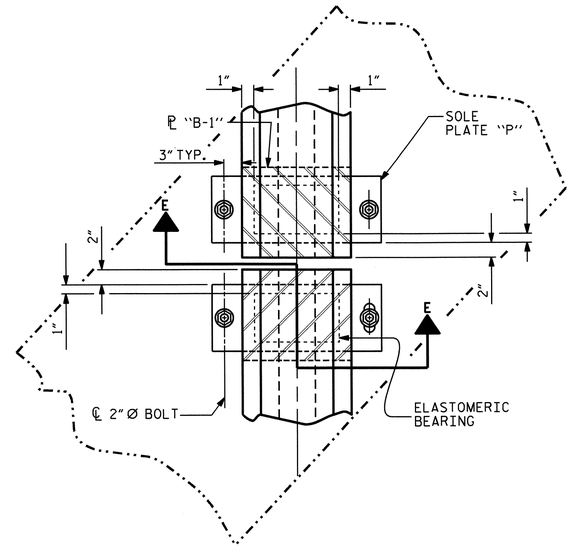

TYPICAL HALF-PLAN (SHOWING CONTINUOUS BENT)

TYPICAL HALF-PLAN (SHOWING SIMPLE SPAN BENT)

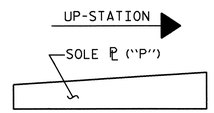

SOLE ℗ PLACEMENT DETAIL

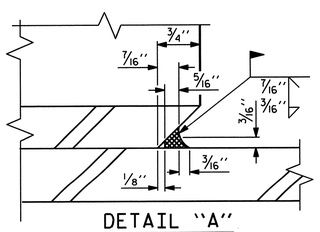

DETAIL "A"

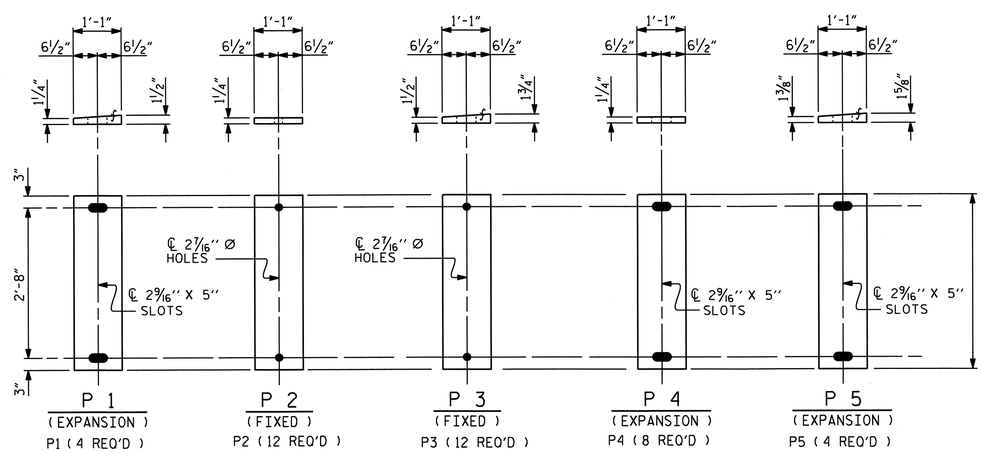

SOLE PLATE DETAILS ("P")

NOTES

AT ALL FIXED POINTS OF SUPPORT, NUTS FOR ANCHOR BOLTS ARE TO BE TIGHTENED FINGER TIGHT AND THEN BACKED OFF 1/2 TURN. THE THREAD OF THE NUT AND BOLT SHALL THEN BE BURRED WITH A SHARP POINTED TOOL.

THE 2" Ø PIPE SLEEVE SHALL BE CUT FROM SCHEDULE 40 PVC PLASTIC PIPE. THE PVC PLASTIC PIPE SHALL MEET THE REQUIREMENTS OF ASTM D1785.

STEEL SOLE PLATES, ANCHOR BOLTS, NUTS, AND WASHERS SHALL BE GALVANIZED IN ACCORDANCE WITH THE STANDARD SPECIFICATIONS.

PRIOR TO WELDING, GRIND THE GALVANIZED SURFACE OF THE PORTION OF THE EMBEDDED PLATE AND SOLE PLATE THAT ARE TO BE WELDED. AFTER WELDING, DAMAGED GALVANIZED SURFACES SHALL BE REPAIRED IN ACCORDANCE WITH THE STANDARD SPECIFICATIONS.

WHEN WELDING THE SOLE PLATE TO THE EMBEDDED PLATE IN THE GIRDER, USE TEMPERATURE INDICATING WAX PENS, OR OTHER SUITABLE MEANS, TO ENSURE THAT THE TEMPERATURE OF THE SOLE PLATE DOES NOT EXCEED 300°F. TEMPERATURES ABOVE THIS MAY DAMAGE THE ELASTOMER.

SOLE PLATE "P", BOLTS, NUTS, WASHERS, AND PIPE SLEEVE SHALL BE INCLUDED IN THE PAY ITEM FOR PRESTRESSED CONCRETE GIRDERS.

ANCHOR BOLTS SHALL MEET THE REQUIREMENTS OF ASTM A449. NUTS SHALL MEET THE REQUIREMENTS OF AASHTO M291-DH OR AASHTO M292-2H. WASHERS SHALL MEET THE REQUIREMENTS OF AASHTO M293. NO SHOP DRAWINGS ARE REQUIRED FOR ANCHOR BOLTS, NUTS AND WASHERS. SHOP INSPECTION IS REQUIRED.

ALL SURFACES OF BEARING PLATES SHALL BE SMOOTH AND STRAIGHT.

THE ELASTOMER IN THE STEEL REINFORCED BEARINGS SHALL HAVE A SHEAR MODULUS OF 0.160 KSI, IN ACCORDANCE WITH AASHTO M251.

FOR STEEL REINFORCED ELASTOMERIC BEARINGS, SEE SPECIAL PROVISIONS.

— LOAD RATINGS —	
	MAX.D.L.+ L.L.
TYPE VII	264 K

PROJECT NO. R-2707B
CLEVELAND COUNTY
STATION: 340+70.00-L-

DESIGN ENGINEER OF RECORD: B. A. DUKE	DATE : 5-13	
ASSEMBLED BY : H. T. BARBOUR CHECKED BY : D. A. GLADDEN	DATE : 7-27-11 DATE : 12-11	
DRAWN BY : EEM 2/97 CHECKED BY : VAP 2/97	REV. 5/1/06 TLA/GM REV. 10/1/11 MAA/GM REV. 10/24/12 AAC/MAA	

STATE OF NORTH CAROLINA
DEPARTMENT OF TRANSPORTATION
RALEIGH

ELASTOMERIC BEARING DETAILS

PRESTRESSED CONCRETE GIRDER SUPERSTRUCTURE (LEFT LANE)

NORTH CAROLINA PROFESSIONAL SEAL 15825 ENGINEER BRYAN D. KLAPPENBACH
6-27-2013

REVISIONS								SHEET NO. S-152
NO.	BY:	DATE:	NO.	BY:	DATE:			
1			3					TOTAL SHEETS 266
2			4					

STR. #5 STD. NO. EB4 (SHT 3)

14-MAY-2013 08:51
K:\Structures\Plans\Bailey\STR5and6\TBARBOUR\Microstation\LEFT LANE\SUPERSTRUCTURE\R2707B_SD_BG.dgn
tbarbour

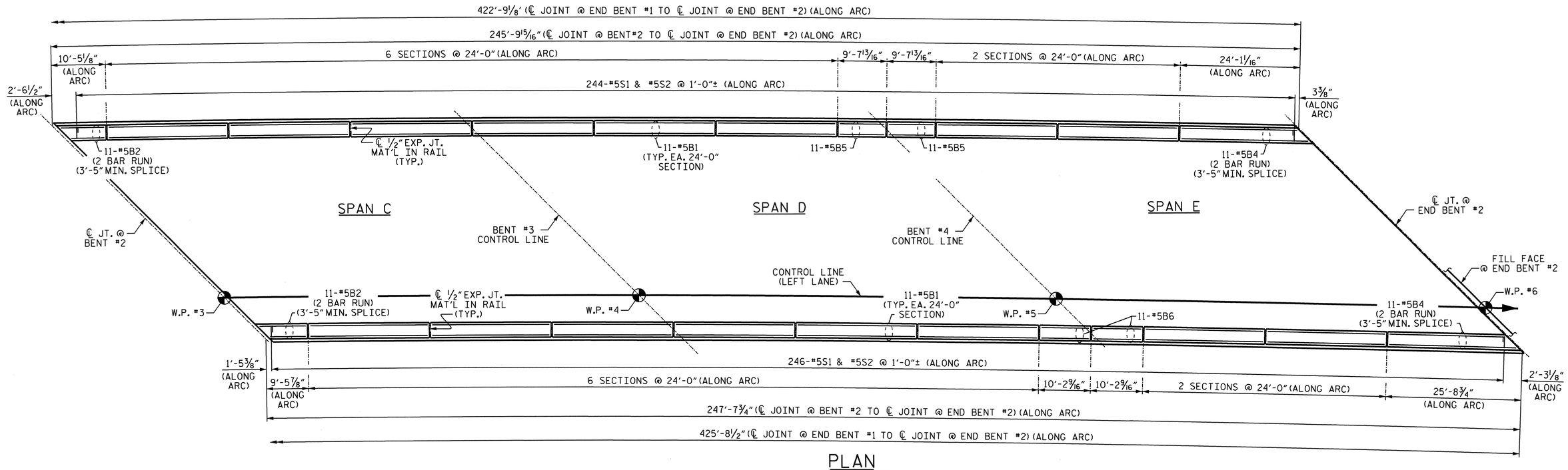

PLAN
(SPANS C, D & E)

BARRIER RAIL DIMENSIONS ARE MEASURED ALONG ARC
AT OUTSIDE FACE OF BARRIER RAIL

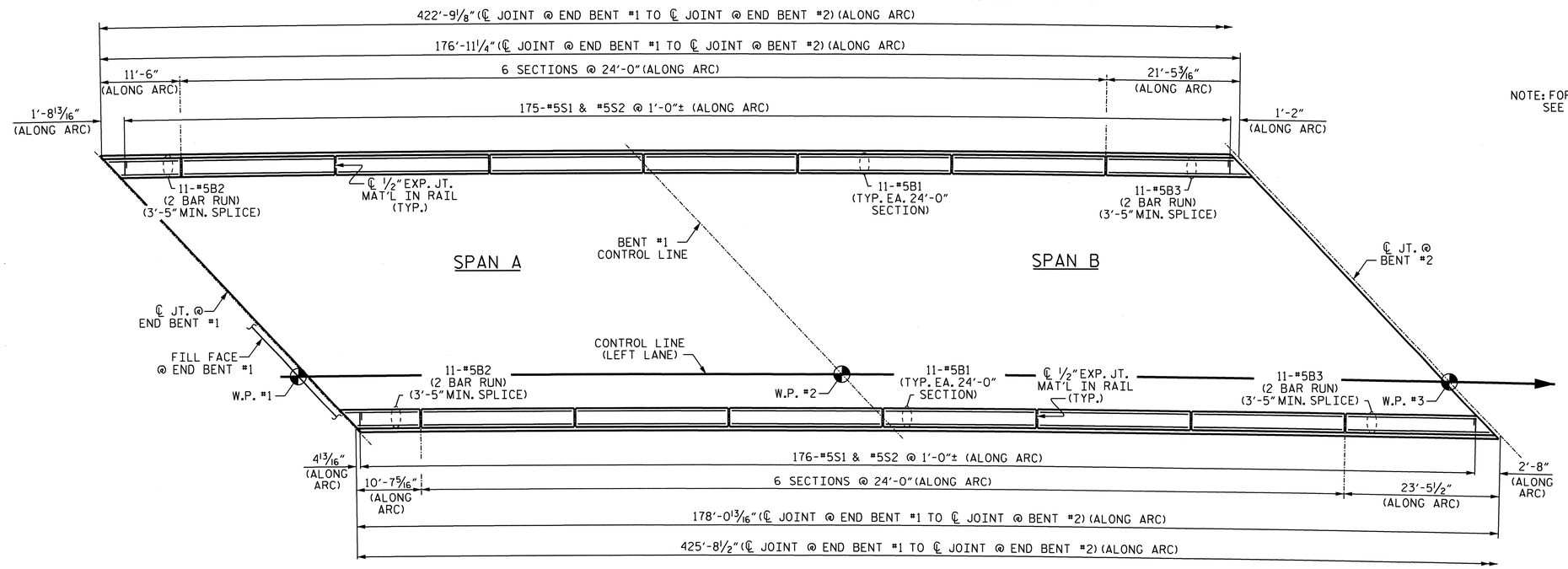

PLAN
(SPANS A & B)

BARRIER RAIL DIMENSIONS ARE MEASURED ALONG ARC
AT OUTSIDE FACE OF BARRIER RAIL

NOTE: FOR BARRIER RAIL ON APPROACH SLABS,
SEE BRIDGE APPROACH SLAB SHEETS.

PROJECT NO. R-2707B
CLEVELAND COUNTY
STATION: 340+70.00-L-

SHEET 1 OF 2

STATE OF NORTH CAROLINA
DEPARTMENT OF TRANSPORTATION
RALEIGH

CONCRETE BARRIER RAIL (LEFT LANE)

NORTH CAROLINA PROFESSIONAL SEAL 15825 ENGINEER BRUCE D. KLAPPENBACH
6-27-2013

REVISIONS								SHEET NO.
NO.	BY:	DATE:	NO.	BY:	DATE:			S-153
1			3					TOTAL SHEETS
2			4					266

STR. #5

DRAWN BY : H. T. BARBOUR DATE : 7-22-11
CHECKED BY : D. A. GLADDEN DATE : 12-11

24-JUN-2013 09:47
K:\Structures\Plans\Bailey\STR5and6\TBARBOUR\Microstation\LEFT LANE\SUPERSTRUCTURE\R2707B_SD_BR.dgn
tbarbour

NOTES

THE BARRIER RAIL IN EACH CONTINUOUS UNIT SHALL NOT BE CAST UNTIL ALL SLAB CONCRETE IN THAT UNIT HAS BEEN CAST AND HAS REACHED A MINIMUM COMPRESSIVE STRENGTH OF 3,000 PSI.

ALL REINFORCING STEEL IN BARRIER RAILS SHALL BE EPOXY COATED.

GROOVED CONTRACTION JOINTS, 1/2" IN DEPTH, SHALL BE TOOLED IN ALL EXPOSED FACES OF THE BARRIER RAIL AND IN ACCORDANCE WITH ARTICLE 825-10(B) OF THE STANDARD SPECIFICATIONS. THE CONTRACTION JOINT SHALL BE LOCATED AT EACH THIRD POINT BETWEEN BARRIER RAIL EXPANSION JOINTS. ONLY ONE CONTRACTION JOINT IS REQUIRED AT MIDPOINT OF BARRIER RAIL SEGMENTS LESS THAN 20 FEET IN LENGTH AND NO CONTRACTION JOINTS ARE REQUIRED FOR THOSE SEGMENTS LESS THAN 10 FEET IN LENGTH.

BAR TYPES

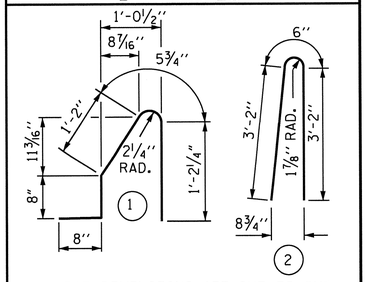

ALL BAR DIMENSIONS ARE OUT TO OUT

BILL OF MATERIAL

FOR CONCRETE BARRIER RAIL ONLY

BAR	NO.	SIZE	TYPE	LENGTH	WEIGHT
* S1	841	#5	1	4'-8"	4093
* S2	841	#5	2	6'-10"	5994
* B1	308	#5	STR	23'-8"	7603
* B2	88	#5	STR	7'-2"	568
* B3	44	#5	STR	12'-9"	585
* B4	44	#5	STR	14'-3"	654
* B5	22	#5	STR	9'-3"	212
* B6	22	#5	STR	9'-10"	226

* EPOXY COATED REINFORCING STEEL	19935 LBS.
CLASS AA CONCRETE	115.4 CU. YDS.
CONCRETE BARRIER RAIL	848.47 LIN. FT.

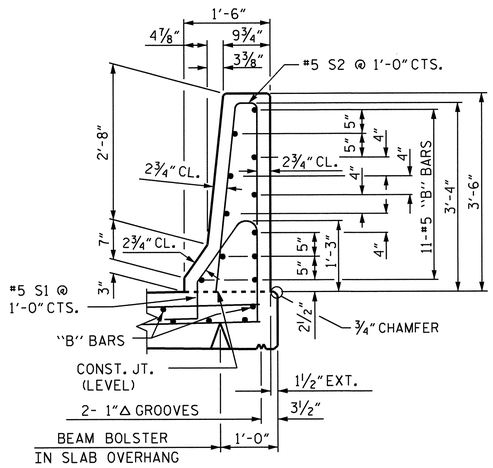

SECTION THRU RAIL

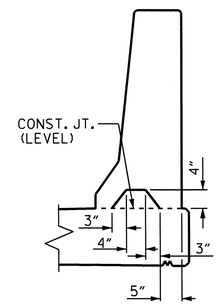

SECTION S-S

AT DAM IN OPEN JOINT (THIS IS TO BE USED ONLY WHEN SLIP FORM IS USED)

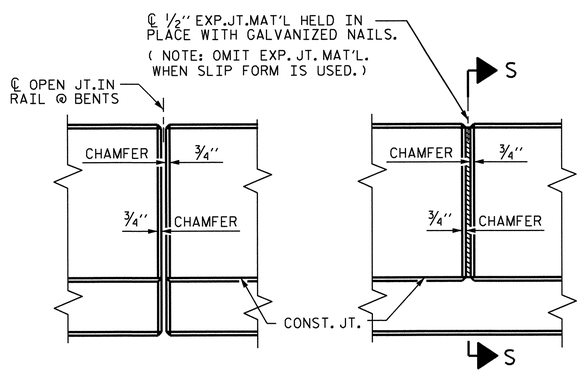

ELEVATION AT EXPANSION JOINTS

BARRIER RAIL DETAILS

PROJECT NO. R-2707B

CLEVELAND COUNTY

STATION: 340+70.00-L-

SHEET 2 OF 2

STATE OF NORTH CAROLINA
DEPARTMENT OF TRANSPORTATION
RALEIGH

CONCRETE BARRIER RAIL (LEFT LANE)

NORTH CAROLINA PROFESSIONAL SEAL 15825 ENGINEER BRUCE D. KLAPPENBACH
6-27-2013

REVISIONS							SHEET NO. S-154
NO.	BY:	DATE:	NO.	BY:	DATE:		TOTAL SHEETS 266
1			3				
2			4				

ASSEMBLED BY : H. T. BARBOUR	DATE : 7-26-11		
CHECKED BY : D. A. GLADDEN	DATE : 12-11		
DRAWN BY : ARB 5/87	REV. 10/17/00	RWW/LES	
CHECKED BY : SJD 9/87	REV. 5/7/03R	RWW/JTE	
	REV. 5/1/06R	TLA/GM	

14-MAY-2013 08:51
K:\Structures\Plans\Bailey\STR5and6\TBARBOUR\Microstation\LEFT LANE\SUPERSTRUCTURE\R2707B_SD_BR.dgn
tbarbour

STR. #5

STD. NO. CBR1 (SHT 3)

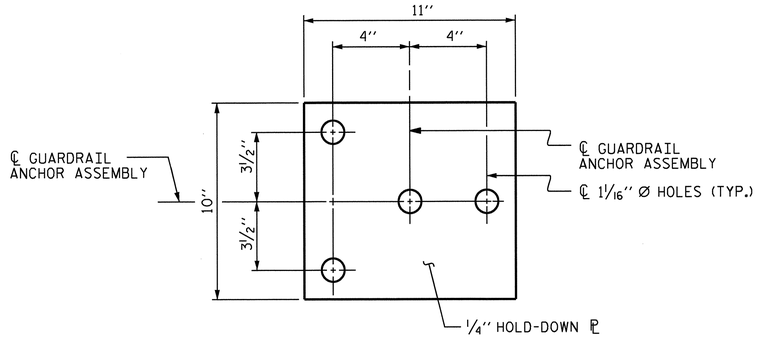

PLAN

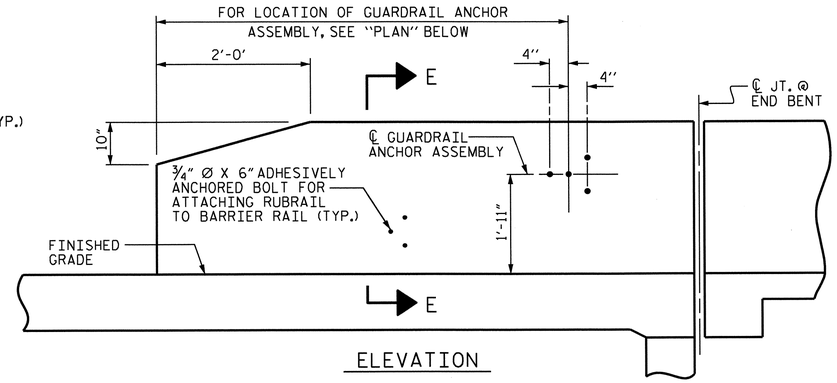

ELEVATION

NOTES

THE GUARDRAIL ANCHOR ASSEMBLY SHALL CONSIST OF A 1/4'' HOLD-DOWN PLATE AND 4 - 7/8'' Ø BOLTS WITH NUTS AND WASHERS, RUBRAIL, AND ADHESIVELY ANCHORED BOLTS.

THE HOLD-DOWN PLATE SHALL CONFORM TO AASHTO M270 GRADE 36. AFTER FABRICATION, THE HOLD-DOWN PLATE SHALL BE HOT-DIP GALVANIZED IN ACCORDANCE WITH AASHTO M111.

BOLTS SHALL CONFORM TO THE REQUIREMENTS OF ASTM A307 AND NUTS SHALL CONFORM TO THE REQUIREMENTS OF AASHTO M291. BOLTS, NUTS AND WASHERS SHALL BE GALVANIZED. (AT THE CONTRACTOR'S OPTION, STAINLESS STEEL BOLTS, NUTS AND WASHERS MAY BE USED AS AN ALTERNATE FOR THE 7/8'' Ø GALVANIZED BOLTS, NUTS AND WASHERS. THEY SHALL CONFORM TO OR EXCEED THE MECHANICAL REQUIREMENTS OF ASTM A307. THE USE OF THIS ALTERNATE SHALL BE APPROVED BY THE ENGINEER.)

THE GUARDRAIL ANCHOR ASSEMBLY IS REQUIRED AT ALL POINTS WHERE APPROACH GUARDRAIL IS TO BE ATTACHED TO THE END OF BARRIER RAIL. FOR POINTS OF ATTACHMENT, SEE SKETCH.

AFTER INSTALLATION, THE EXPOSED THREAD OF THE BOLT SHALL BE BURRED WITH A SHARP POINTED TOOL.

THE COST OF THE GUARDRAIL ANCHOR ASSEMBLY SHALL BE INCLUDED IN THE UNIT CONTRACT PRICE BID FOR CONCRETE BARRIER RAIL.

THE 1 1/4'' Ø HOLES SHALL BE FORMED OR DRILLED WITH A CORE BIT. IMPACT TOOLS WILL NOT BE PERMITTED. ANY CONCRETE DAMAGED BY THIS WORK SHALL BE REPAIRED TO THE SATISFACTION OF THE ENGINEER.

THE C6 X 8.2 RUBRAIL IS TO BE ADHESIVELY ANCHORED TO THE RAIL USING THREE 3/4'' Ø X 6'' BOLTS WITH WASHERS. LEVEL ONE FIELD TESTING IS REQUIRED, AND THE YIELD LOAD OF THE 3/4'' Ø BOLT IS 12 KIPS. FOR ADHESIVELY ANCHORED ANCHOR BOLTS OR DOWELS, SEE STANDARD SPECIFICATIONS. SEE ROADWAY STANDARD 862.03 FOR DETAILS AND LOCATION OF THE RUBRAIL.

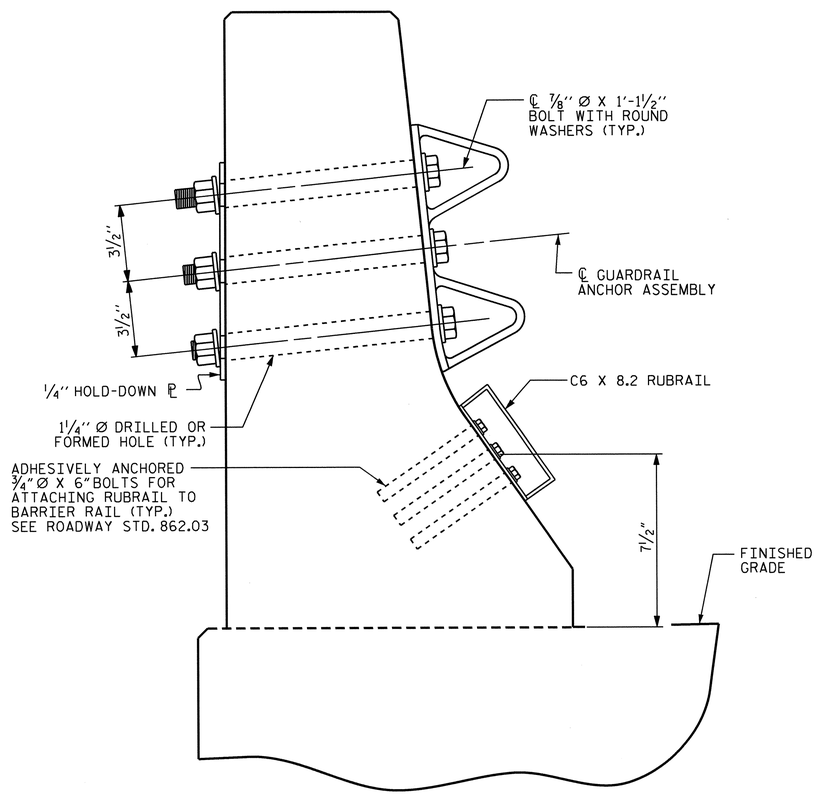

SECTION E-E

GUARDRAIL ANCHOR ASSEMBLY DETAILS

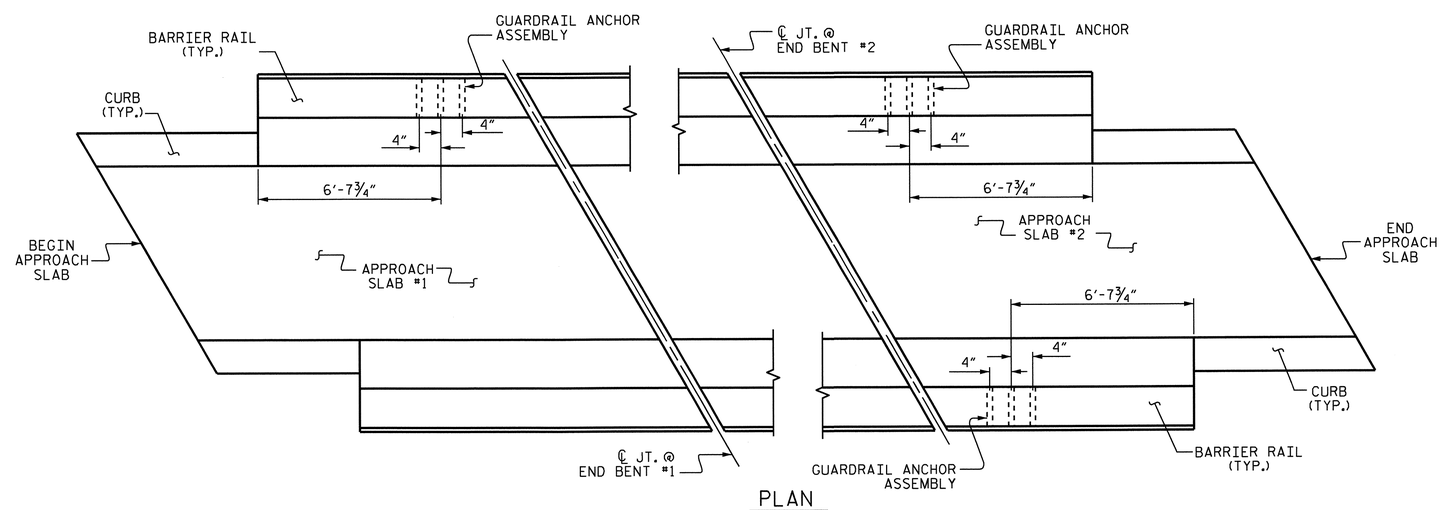

PLAN

LOCATION OF ANCHORS FOR GUARDRAIL

PROJECT NO. R-2707B
CLEVELAND COUNTY
STATION: 340+70.00-L-

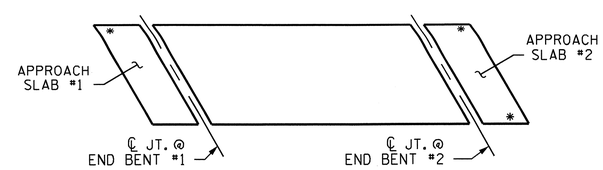

SKETCH SHOWING POINTS OF ATTACHMENTS

✳ DENOTES GUARDRAIL ANCHOR ASSEMBLY

NORTH CAROLINA PROFESSIONAL SEAL 15828 ENGINEER BRUCE D. KLAPPENBACH
6-27-2013

STATE OF NORTH CAROLINA
DEPARTMENT OF TRANSPORTATION
RALEIGH

GUARDRAIL ANCHORAGE FOR BARRIER RAIL (LEFT LANE)

REVISIONS								SHEET NO. S-155
NO.	BY:	DATE:	NO.	BY:	DATE:			
1			3					TOTAL SHEETS 266
2			4					

STR. #5

STD. NO. GRA2

ASSEMBLED BY :	H. T. BARBOUR		DATE :	7-18-11	
CHECKED BY :	D. A. GLADDEN		DATE :	12-11	
DRAWN BY :	TLA	5/06	REV. 10/11/11		MAA/GM
CHECKED BY :	GM	5/06	REV. 7/12		MAA/GM
			REV. 10/12		MAA/GM

24-JUN-2013 09:51
K:\Structures\Plans\Bailey\STR5and6\TBARBOUR\Microstation\LEFT LANE\SUPERSTRUCTURE\R2707B_SD_GR.dgn
tbarbour

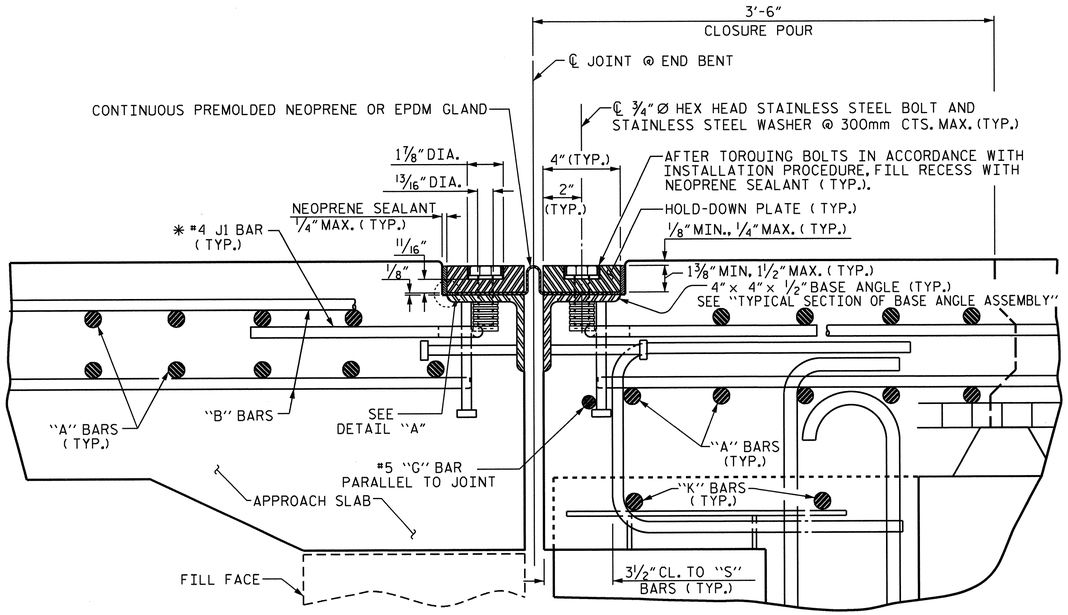

EXPANSION JOINT DETAILS

SECTION NORMAL TO JOINT -- PRESTRESSED GIRDER SUPERSTRUCTURE
END BENT #1 SHOWN, END BENT #2 SIMILAR

* THE QUANTITY OF #4 J1 BARS ON THE BILL OF MATERIAL IS BASED ON 1'-0" CENTERS. J1 BARS SHALL BE PLACED AT EACH VERTICAL STUD ANCHOR BOLT. IN THE EVENT THAT THE NUMBER OF VERTICAL STUD ANCHORS EXCEEDS THE NUMBER OF J1 BARS SPECIFIED, ADDITIONAL J1 BARS WILL NOT BE REQUIRED.

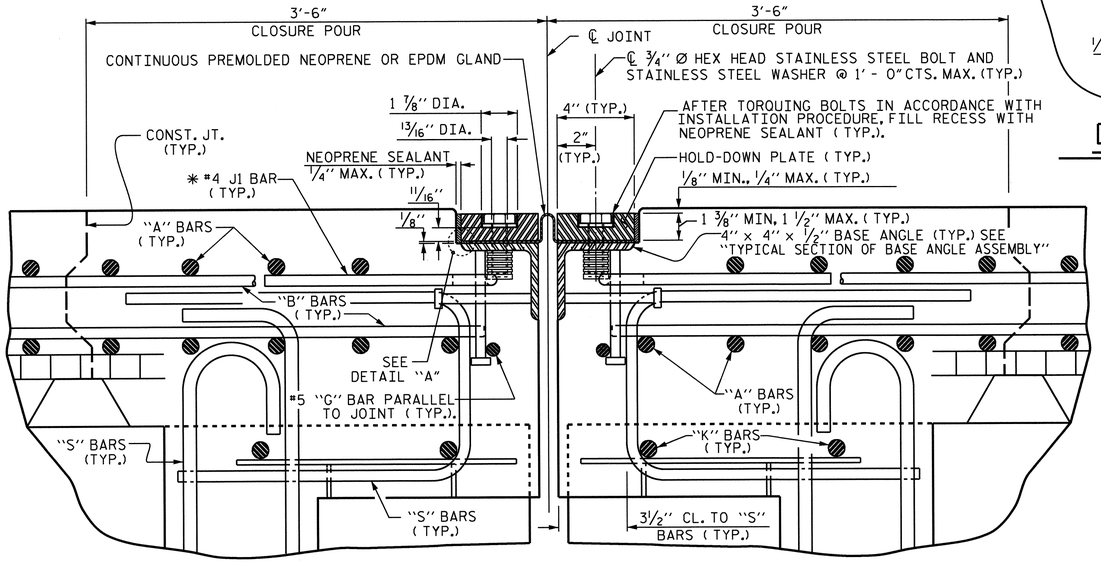

EXPANSION JOINT DETAIL @ BENT #2

SECTION NORMAL TO JOINT -- PRESTRESSED GIRDER SUPERSTRUCTURE

* THE QUANTITY OF #4 J1 BARS ON THE BILL OF MATERIAL IS BASED ON 1'-0" CENTERS. J1 BARS SHALL BE PLACED AT EACH VERTICAL STUD ANCHOR BOLT. IN THE EVENT THAT THE NUMBER OF VERTICAL STUD ANCHORS EXCEEDS THE NUMBER OF J1 BARS SPECIFIED, ADDITIONAL J1 BARS WILL NOT BE REQUIRED.

INSTALLATION PROCEDURE

1. A TEMPLATE OR OTHER SUITABLE DEVICE SHALL BE USED TO FORM THE TOP OF THE EXPANSION JOINT SEAL BLOCKOUT TO THE PROPER DEPTH AND WIDTH. THE TEMPLATE SHALL BE 4 1/8" TO 4 1/4" WIDE AND OF SUCH THICKNESS AS TO PROVIDE FOR CORRECT FINAL ELEVATION OF TOP OF HOLD-DOWN PLATES. THE TEMPLATE SHALL BE ATTACHED TO THE BASE ANGLE ASSEMBLY WITH THE 3/4" Ø HEX HEAD BOLTS PROVIDED FOR THE HOLD-DOWN PLATES. A 1" Ø HOLE SHALL BE PROVIDED IN THE TEMPLATE CENTERED OVER EACH WEEP HOLE IN THE 4" X 4" X 1/2" BASE ANGLE. OTHER METHODS OF INSURING DRAINAGE THROUGH WEEP HOLES MAY BE EMPLOYED SUBJECT TO ENGINEER'S APPROVAL.
2. AFTER THE CONCRETE HAS BEEN CAST ON BOTH SIDES OF THE JOINT, REMOVE THE TEMPLATE. THOROUGHLY CLEAN THE BOLT HOLES AND THE ANGLE PLATE. REMOVE ANY EXCESS CONCRETE THAT COMES OUT OF THE WEEP HOLES. ANY DAMAGED STEEL SHALL BE COATED WITH A MINIMUM THICKNESS OF 4 DRY MILS OF ZINC-RICH PAINT IN ACCORDANCE WITH THE STANDARD SPECIFICATIONS.
3. LAY THE GLAND ON THE BASE ANGLE AND FIELD MARK THE GLAND FOR THE BOLT HOLES. HOLES IN THE GLAND SHALL BE PUNCHED 7/8" IN DIAMETER WITH A HAND PUNCH.
4. IN ORDER TO CHECK FOR PROPER ALIGNMENT, PLACE THE GLAND AND HOLD-DOWN PLATES ON THE BASE ANGLE. DO NOT APPLY NEOPRENE SEALANT. BOLT THE HOLD-DOWN PLATES TO THE BASE ANGLE BUT DO NOT TIGHTEN. THE ENGINEER SHALL INSPECT THE JOINT SEAL DEVICE FOR PROPER ALIGNMENT.
5. AFTER INSPECTION, REMOVE THE HOLD-DOWN PLATES AND GLAND. APPLY NEOPRENE SEALANT TO THE BASE ANGLE IN ACCORDANCE WITH THE "INSTALLATION SKETCH". PLACE GLAND AND HOLD-DOWN PLATES ON THE BASE ANGLE. BOLT THE HOLD-DOWN PLATES TO THE BASE ANGLE ASSEMBLY AND TOROUE THE BOLTS TO 88 FT-LBS WITH A TOROUE WRENCH. CHECK THE TOROUE AFTER THREE (3) HOURS AND, IF NECESSARY, RETIGHTEN TO 88 FT-LBS. A FINAL CHECK SHALL BE MADE AT SEVEN (7) DAYS. TOROUE SHALL NOT BE LESS THAN 80 FT-LBS AFTER SEVEN (7) DAYS.
6. AFTER PROPER TOROUING, CLEAN THE BOLT HOLE RECESSES AND THE RECESS BETWEEN THE JOINT SEAL DEVICE AND CONCRETE, COMPLETELY FILL THESE RECESSES WITH NEOPRENE SEALANT.

GENERAL NOTES

1. FOR EXPANSION JOINT SEALS, SEE SPECIAL PROVISIONS.
2. ALL PLATES AND ANGLES SHALL CONFORM TO AASHTO M270 GRADE 36 STEEL OR APPROVED EQUAL. ALL HOLD-DOWN BOLTS SHALL CONFORM TO ASTM F593 ALLOY 304 STAINLESS STEEL AND WASHERS SHALL CONFORM TO ASTM F844 EXCEPT THEY SHALL BE MADE FROM ALLOY 304 STAINLESS STEEL. ALL STUD ANCHORS SHALL CONFORM TO AASHTO M169, GRADES 1010 THRU 1020 OR APPROVED EQUAL. ALL CONCRETE INSERTS SHALL BE CLOSED END AND SHALL CONFORM TO AASHTO M169, GRADE 12L14. TENSILE CAPACITY SHALL BE 3000 LBS. MIN.
3. A PREMOLDED CORRUGATED OR NON-CORRUGATED GLAND SHALL BE USED FOR JOINTS SKEWED BETWEEN 50° THRU 130°. FOR JOINTS SKEWED LESS THAN 50° OR MORE THAN 130°, ONLY A CORRUGATED GLAND SHALL BE USED.
4. CLOSED END FERRULES AND STUD ANCHORS SHALL BE SHOP WELDED AND ALL HOLES SHALL BE SHOP DRILLED AS SHOWN ON PLANS. STUD ANCHORS SHALL BE ELECTRIC ARC END WELDED WITH COMPLETE FUSION.
5. SURFACES COMING IN CONTACT WITH NEOPRENE SHALL BE GROUND SMOOTH PRIOR TO METALLIZING.
6. UPON COMPLETION OF SHOP FABRICATION, THE HOLD DOWN PLATE AND BASE ANGLE ASSEMBLY, AS SHOWN IN THE "TYPICAL SECTION OF BASE ANGLE ASSEMBLY", SHALL BE METALLIZED. SEE SPECIAL PROVISION FOR THERMAL SPRAYED COATINGS (METALLIZATION).
7. BASE ANGLE ASSEMBLY SHALL BE CONTINUOUS FOR THE LENGTH OF THE JOINT. AT CROWN BREAKS, THE ENDS OF THE BASE ANGLE ASSEMBLY SHALL BE CUT PARALLEL TO THE BRIDGE CENTERLINE FOR SKEWS LESS THAN 80° AND GREATER THAN 100°. FINISHED WELD SHALL BE GROUND SMOOTH AND COATED WITH A MINIMUM THICKNESS OF 4 DRY MILS OF ZINC-RICH PAINT IN ACCORDANCE WITH THE STANDARD SPECIFICATIONS.
8. FIELD SPLICES OF HOLD-DOWN PLATES SHALL BE KEPT TO A MINIMUM. CONTRACTOR SHALL FURNISH DETAILED PLANS SHOWING PROPOSED SPLICE LOCATIONS FOR APPROVAL. HOLD-DOWN PLATES SHALL NOT EXCEED 20' LENGTHS UNLESS APPROVED BY THE ENGINEER.
9. NO ALTERNATE JOINT DETAILS SHALL BE PERMITTED IN LIEU OF THOSE SHOWN ON THESE PLANS.
10. THE CONTRACTOR MAY, AT HIS OPTION, USE ADHESIVELY ANCHORED ANCHOR BOLTS IN PLACE OF CONCRETE INSERTS FOR COVER PLATES. THE YIELD LOAD OF THE 3/4" Ø BOLT IS 10 KIPS. FIELD TESTING OF THE ADHESIVE BONDING SYSTEM IS NOT REQUIRED.

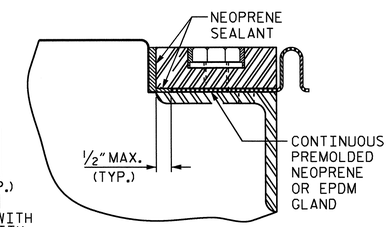

DETAIL "A"

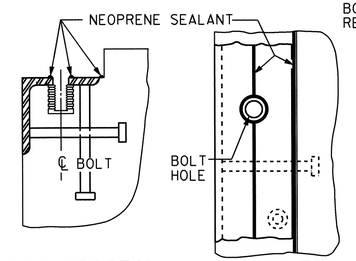

CROSS SECTION PLAN VIEW

INSTALLATION SKETCH

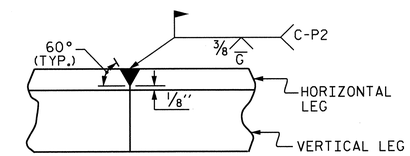

DETAIL- FIELD WELD SPLICE OF BASE ANGLE

MOVEMENT AND SETTING AT JOINT					
BENT NO.	SKEW ANGLE TO TANGENT	TOTAL MOVEMENT (ALONG ℄ RDWY)	PERPENDICULAR JOINT OPENING AT 45° F	PERPENDICULAR JOINT OPENING AT 60° F	PERPENDICULAR JOINT OPENING AT 90° F
END BENT #1	47°-21'-44"	3/4"	1 3/8"	1 5/16"	1 1/8"
BENT #2	45°-34'-33"	1 3/4"	1 7/8"	1 11/16"	1 1/4"
END BENT #2	43°-05'-47"	1"	1 1/2"	1 3/8"	1 1/8"

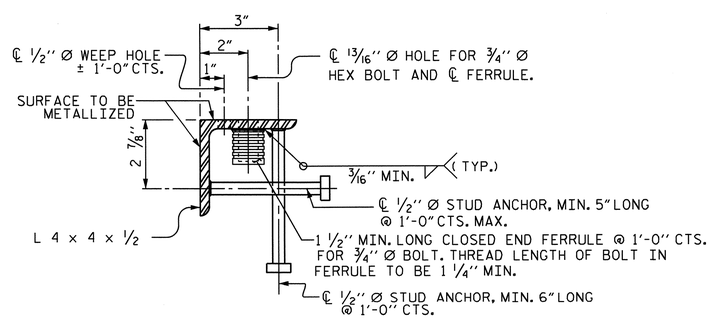

TYPICAL SECTION OF BASE ANGLE ASSEMBLY

PROJECT NO. R-2707B
CLEVELAND COUNTY
STATION: 340+70.00-L-

SHEET 1 OF 2

STATE OF NORTH CAROLINA
DEPARTMENT OF TRANSPORTATION
RALEIGH

EXPANSION JOINT SEAL DETAILS (LEFT LANE)

REVISIONS								SHEET NO.
NO.	BY:	DATE:	NO.	BY:	DATE:			S-156
1			3					TOTAL SHEETS
2			4					266

DESIGN ENGINEER OF RECORD: B. A. DUKE	DATE : 5-13		
ASSEMBLED BY : H. T. BARBOUR	DATE : 8-04-11		
CHECKED BY : D. A. GLADDEN	DATE : 12-11		
DRAWN BY : REK 9/87	REV. 5/7/03R	RWW/JTE	
CHECKED BY : CRK 10/87	REV. 5/1/06R	TLA/GM	
	REV. 10/1/11	MAA/GM	

STR. #5 STD. NO. EJS1 (SHT 2)

14-MAY-2013 08:50
K:\Structures\Plans\Bailey\STR5and6\TBARBOUR\Microstation\LEFT LANE\SUPERSTRUCTURE\R2707B_SD_JS.dgn
tbarbour

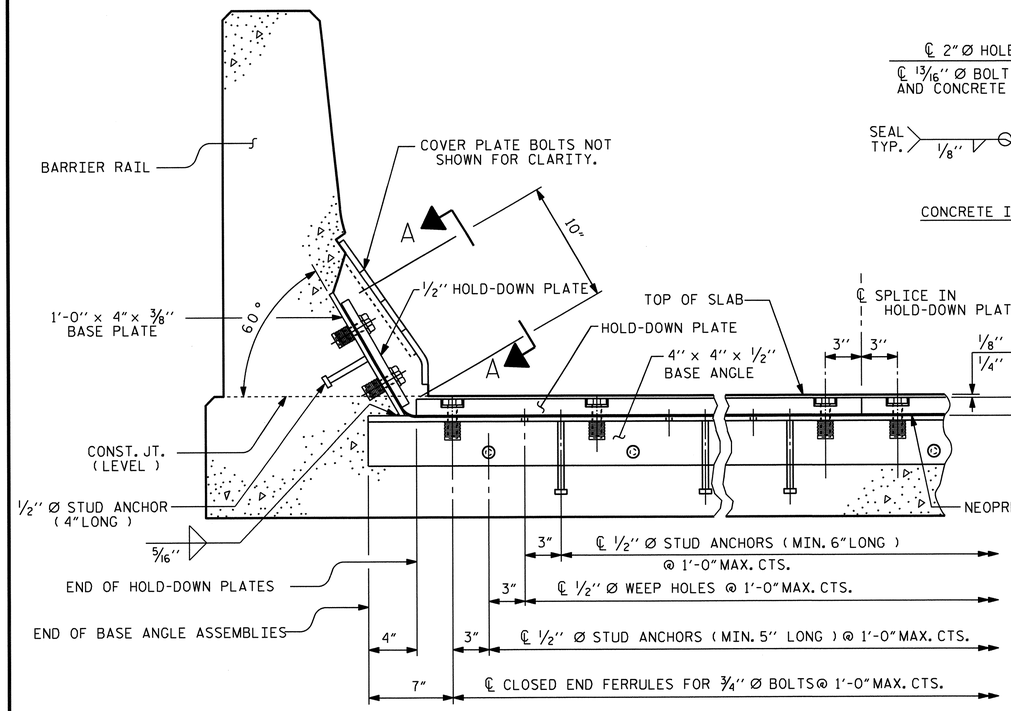

SECTION THRU RAIL NORMAL TO JOINT

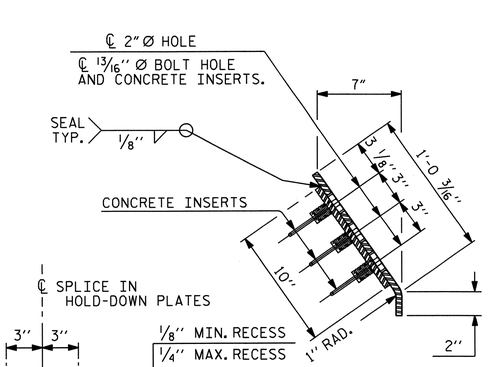

END VIEW

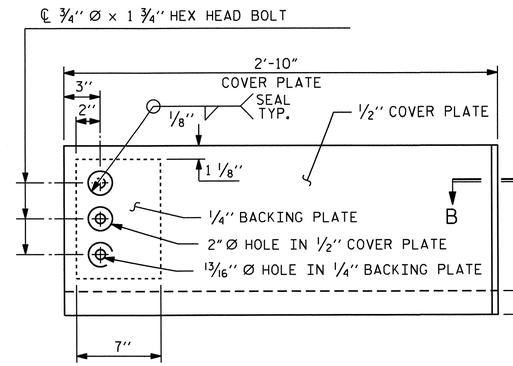

TYPE I - ELEVATION VIEW

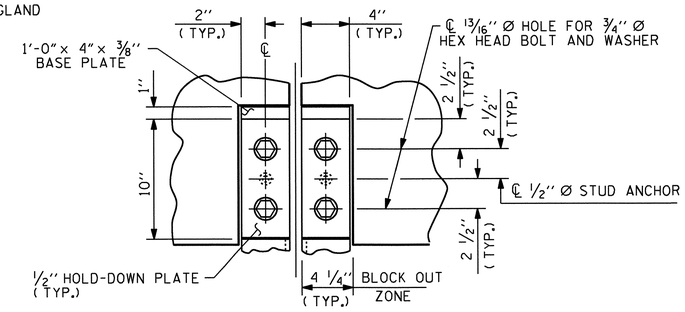

SECTION A - A

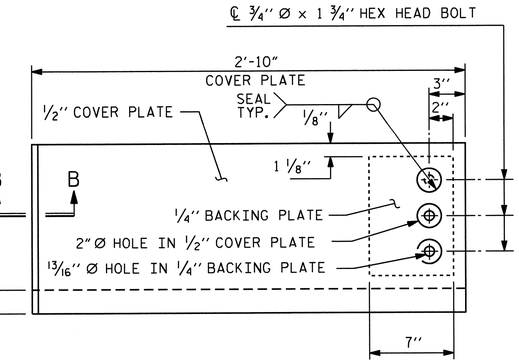

TYPE II - ELEVATION VIEW

COVER PLATE DETAILS

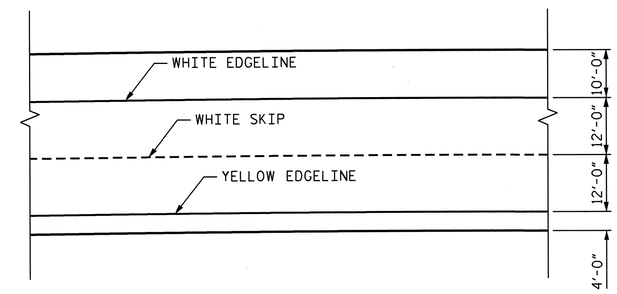

PAVEMENT MARKING ALIGNMENT

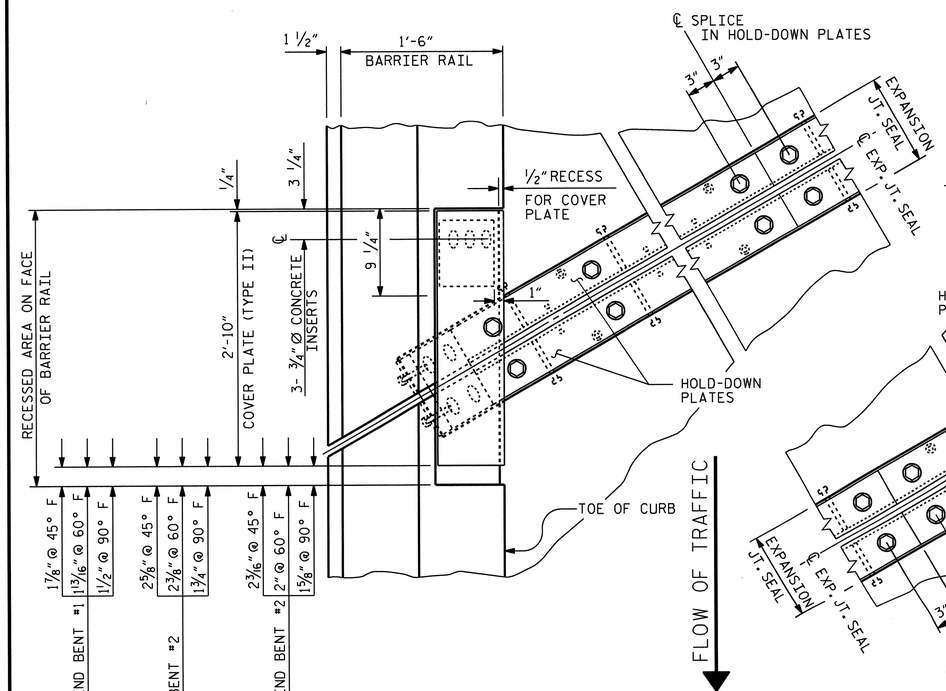

PLAN OF EXPANSION JOINT SEAL - LEFT SIDE

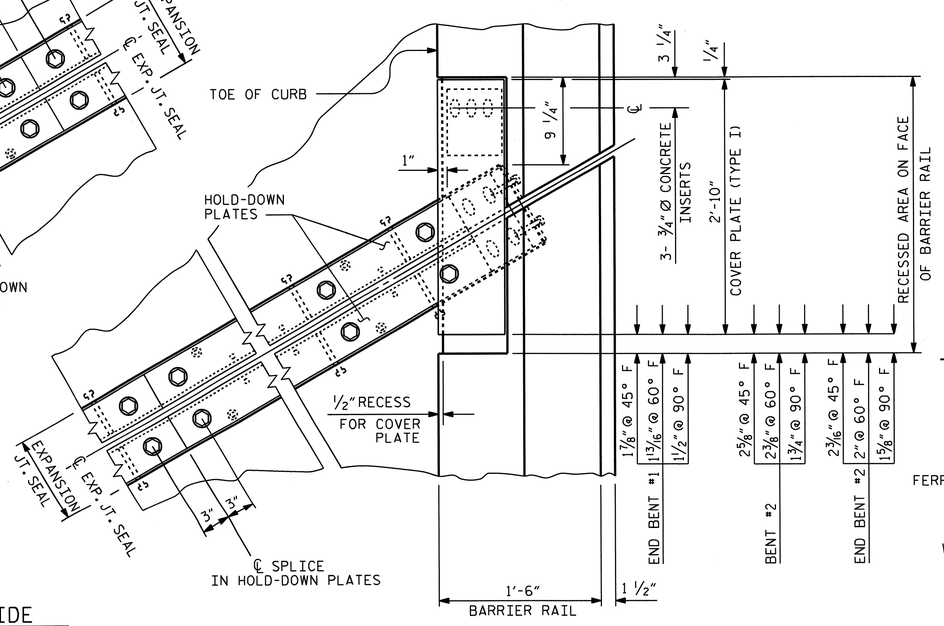

PLAN OF EXPANSION JOINT SEAL - RIGHT SIDE

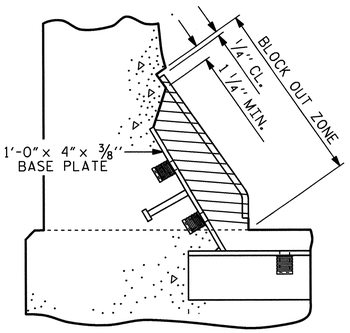

BLOCK OUT DETAIL

SEE "SECTION A - A" FOR OTHER DETAILS.

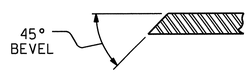

SECTION B - B

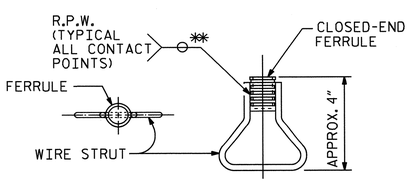

CONCRETE INSERT

** EACH WELDED ATTACHMENT OF WIRE TO FERRULE SHALL DEVELOP THE TENSILE STRENGTH OF THE WIRE.

NORTH CAROLINA PROFESSIONAL SEAL 15825 ENGINEER B. D. KLAPPENBACH
6-27-2013

PROJECT NO. R-2707B
CLEVELAND COUNTY
STATION: 340+70.00-L-

SHEET 2 OF 2

STATE OF NORTH CAROLINA
DEPARTMENT OF TRANSPORTATION
RALEIGH

EXPANSION JOINT SEAL DETAILS FOR BARRIER RAIL (LEFT LANE)

REVISIONS						SHEET NO.
NO.	BY:	DATE:	NO.	BY:	DATE:	S-157
1			3			TOTAL SHEETS
2			4			266

ASSEMBLED BY : H. T. BARBOUR	DATE : 8-05-11		
CHECKED BY :	DATE :		
DRAWN BY : REK 9/87	REV. 7/17/98	RWW/LES	DESIGN ENGINEER OF RECORD: B. A. DUKE DATE : 5-13
CHECKED BY : CRK 10/87	REV. 10/17/00	RWW/LES	
	REV. 5/1/06	TLA/GM	

14-MAY-2013 08:50
K:\Structures\Plans\Bailey\STR5and6\TBARBOUR\Microstation\LEFT LANE\SUPERSTRUCTURE\R2707B_SD_JS.dgn
tbarbour

STR. #5

STD. NO. EJS2

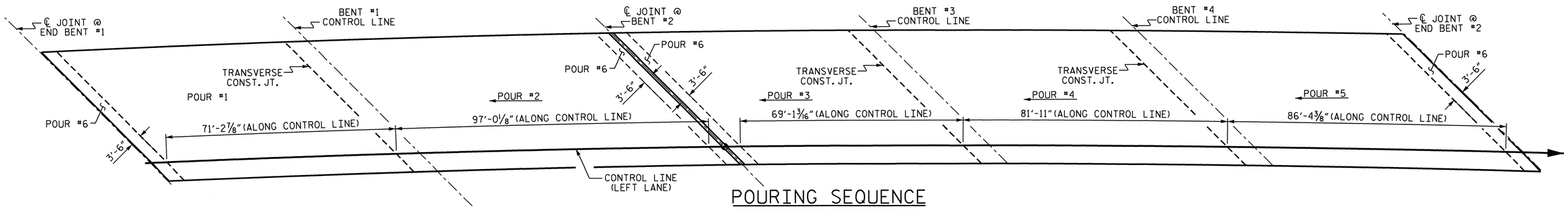

POURING SEQUENCE

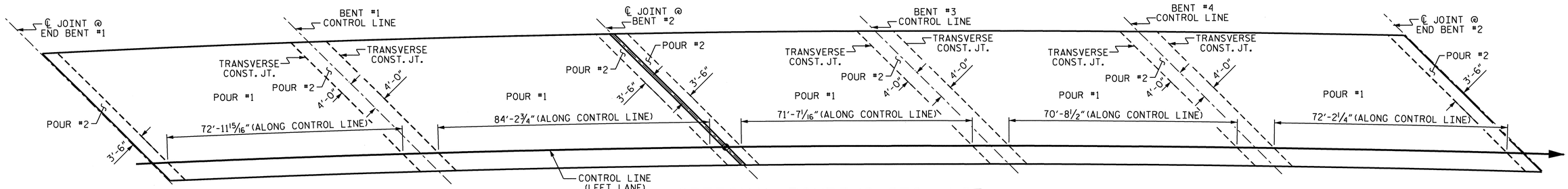

OPTIONAL POURING SEQUENCE

POUR #2 CANNOT BE STARTED UNTIL BOTH ADJACENT #1 POURS REACH A MINIMUM OF 3000 PSI.

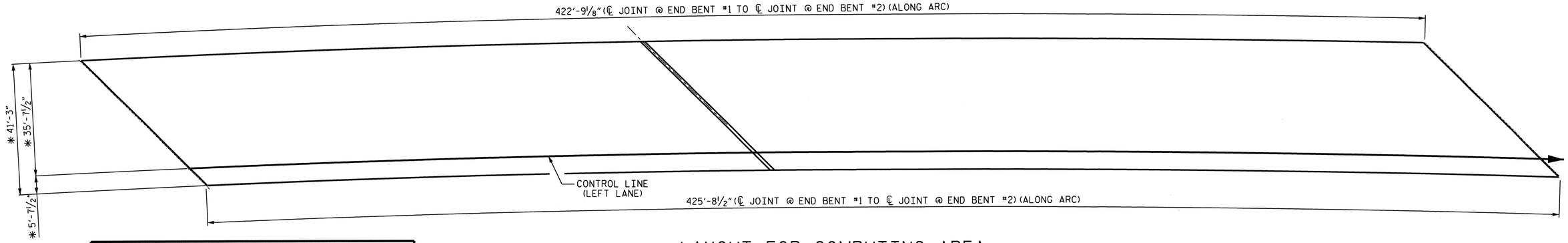

LAYOUT FOR COMPUTING AREA REINFORCED CONCRETE DECK SLAB SQ. FT. = 17500

✱ DIMENSIONS ARE TO CIRCLES CONCENTRIC WITH -L-.

SUPERSTRUCTURE REINFORCING STEEL LENGTHS ARE BASED ON THE FOLLOWING MINIMUM SPLICE LENGTHS

BAR SIZE	SUPERSTRUCTURE EXCEPT APPROACH SLABS, PARAPET, AND BARRIER RAIL		APPROACH SLABS		PARAPET AND BARRIER RAIL
	EPOXY COATED	UNCOATED	EPOXY COATED	UNCOATED	
#4	2'-0"	1'-9"	2'-0"	1'-9"	2'-9"
#5	2'-6"	2'-2"	2'-6"	2'-2"	3'-5"
#6	3'-0"	2'-7"	3'-10"	2'-7"	4'-4"
#7	5'-3"	3'-6"			
#8	6'-10"	4'-7"			

SUPERSTRUCTURE BILL OF MATERIAL

		CLASS AA CONCRETE	REINFORCING STEEL	EPOXY COATED REINFORCING STEEL
		(CU. YDS.)	(LBS.)	(LBS.)
SPANS A, B, C, D AND E	POUR #1	106.5		
	POUR #2	163.1		
	POUR #3	102.4		
	POUR #4	140.9		
	POUR #5	147.9		
	POUR #6	43.5		
TOTALS✱✱		704.3	67180	66425

✱✱ QUANTITIES FOR BARRIER RAIL ARE NOT INCLUDED

GROOVING BRIDGE FLOORS

BRIDGE DECK	14,762	SQ.FT.
APPROACH SLABS	1,638	SQ.FT.
TOTAL	16,400	SQ.FT.

NORTH CAROLINA PROFESSIONAL SEAL 15825 ENGINEER BRUCE D. KLAPPENBACH
6-27-2013

PROJECT NO. R-2707B
CLEVELAND COUNTY
STATION: 340+70.00-L-

SHEET 1 OF 2

STATE OF NORTH CAROLINA
DEPARTMENT OF TRANSPORTATION
RALEIGH

SUPERSTRUCTURE BILL OF MATERIAL LEFT LANE

REVISIONS						SHEET NO.
NO.	BY:	DATE:	NO.	BY:	DATE:	S-158
1			3			TOTAL SHEETS 266
2			4			

DRAWN BY : H. T. BARBOUR DATE : 7-28-11
CHECKED BY : D. A. GLADDEN DATE : 2-12

25-JUN-2013 10:18
K:\Structures\Plans\Bolley\STR5and6\TBARBOUR\Microstation\LEFT LANE\SUPERSTRUCTURE\R2707B_SD_BM.dgn
tbarbour

STR. #5

REINFORCING BAR SCHEDULE
SPANS A THRU E

BAR	NO.	SIZE	TYPE	LENGTH	WEIGHT
* A1	745	#5	STR	40'-11"	31794
A2	745	#5	STR	40'-11"	31794
*A101	3	#5	STR	39'-7"	124
*A102	3	#5	STR	38'-1"	119
*A103	3	#5	STR	36'-8"	115
*A104	3	#5	STR	35'-2"	110
*A105	3	#5	STR	33'-8"	105
*A106	3	#5	STR	32'-3"	101
*A107	3	#5	STR	30'-9"	96
*A108	3	#5	STR	29'-3"	92
*A109	3	#5	STR	27'-10"	87
*A110	3	#5	STR	26'-4"	82
*A111	3	#5	STR	24'-11"	78
*A112	3	#5	STR	23'-5"	73
*A113	3	#5	STR	21'-11"	69
*A114	3	#5	STR	20'-6"	64
*A115	3	#5	STR	19'-0"	59
*A116	3	#5	STR	17'-6"	55
*A117	3	#5	STR	16'-1"	50
*A118	3	#5	STR	14'-7"	46
*A119	3	#5	STR	13'-1"	41
*A120	3	#5	STR	11'-8"	37
*A121	3	#5	STR	10'-2"	32
*A122	3	#5	STR	8'-8"	27
*A123	3	#5	STR	7'-3"	23
*A124	3	#5	STR	5'-9"	18
*A125	3	#5	STR	4'-3"	13
*A126	9	#5	STR	2'-9"	26
*A127	3	#5	STR	39'-7"	124
*A128	3	#5	STR	38'-2"	119
*A129	3	#5	STR	36'-9"	115
*A130	3	#5	STR	35'-3"	110
*A131	3	#5	STR	33'-10"	106
*A132	3	#5	STR	32'-5"	101
*A133	3	#5	STR	31'-0"	97
*A134	3	#5	STR	29'-7"	93
*A135	3	#5	STR	28'-2"	88
*A136	3	#5	STR	26'-8"	83
*A137	3	#5	STR	25'-3"	79
*A138	3	#5	STR	23'-10"	75
*A139	3	#5	STR	22'-5"	70
*A140	3	#5	STR	21'-0"	66
*A141	3	#5	STR	19'-7"	61
*A142	3	#5	STR	18'-1"	57
*A143	3	#5	STR	16'-8"	52
*A144	3	#5	STR	15'-3"	48
*A145	3	#5	STR	13'-10"	43
*A146	3	#5	STR	12'-5"	39
*A147	3	#5	STR	11'-0"	34
*A148	3	#5	STR	9'-7"	30
*A149	3	#5	STR	8'-2"	26
*A150	3	#5	STR	6'-8"	21
* A151	3	#5	STR	5'-3"	16
* A152	3	#5	STR	3'-10"	12
* A153	3	#5	STR	2'-4"	7
* A154	12	#6	STR	7'-2"	129
A201	3	#5	STR	39'-7"	124
A202	3	#5	STR	38'-1"	119
A203	3	#5	STR	36'-8"	115

BAR	NO.	SIZE	TYPE	LENGTH	WEIGHT
A204	3	#5	STR	35'-2"	110
A205	3	#5	STR	33'-8"	105
A206	3	#5	STR	32'-3"	101
A207	3	#5	STR	30'-9"	96
A208	3	#5	STR	29'-3"	92
A209	3	#5	STR	27'-10"	87
A210	3	#5	STR	26'-4"	82
A211	3	#5	STR	24'-11"	78
A212	3	#5	STR	23'-5"	73
A213	3	#5	STR	21'-11"	69
A214	3	#5	STR	20'-6"	64
A215	3	#5	STR	19'-0"	59
A216	3	#5	STR	17'-6"	55
A217	3	#5	STR	16'-1"	50
A218	3	#5	STR	14'-7"	46
A219	3	#5	STR	13'-1"	41
A220	3	#5	STR	11'-8"	37
A221	3	#5	STR	10'-2"	32
A222	3	#5	STR	8'-8"	27
A223	3	#5	STR	7'-3"	23
A224	3	#5	STR	5'-9"	18
A225	3	#5	STR	4'-3"	13
A226	3	#5	STR	2'-9"	9
A227	3	#5	STR	39'-7"	124
A228	3	#5	STR	38'-2"	119
A229	3	#5	STR	36'-9"	115
A230	3	#5	STR	35'-3"	110
A231	3	#5	STR	33'-10"	106
A232	3	#5	STR	32'-5"	101
A233	3	#5	STR	31'-0"	97
A234	3	#5	STR	29'-7"	93
A235	3	#5	STR	28'-2"	88
A236	3	#5	STR	26'-8"	83
A237	3	#5	STR	25'-3"	79
A238	3	#5	STR	23'-10"	75
A239	3	#5	STR	22'-5"	70
A240	3	#5	STR	21'-0"	66
A241	3	#5	STR	19'-7"	61
A242	3	#5	STR	18'-1"	57
A243	3	#5	STR	16'-8"	52
A244	3	#5	STR	15'-3"	48
A245	3	#5	STR	13'-10"	43
A246	3	#5	STR	12'-5"	39
A247	3	#5	STR	11'-0"	34
A248	3	#5	STR	9'-7"	30
A249	3	#5	STR	8'-2"	26
A250	3	#5	STR	6'-8"	21
A251	3	#5	STR	5'-3"	16
A252	3	#5	STR	3'-10"	12
A253	3	#5	STR	2'-4"	7
*A301	3	#5	STR	39'-6"	124
*A302	3	#5	STR	38'-2"	119
*A303	3	#5	STR	36'-9"	115
*A304	3	#5	STR	35'-5"	111
*A305	3	#5	STR	34'-0"	106
*A306	3	#5	STR	32'-8"	102
*A307	3	#5	STR	31'-3"	98
*A308	3	#5	STR	29'-11"	94
*A309	3	#5	STR	28'-6"	89
*A310	3	#5	STR	27'-2"	85
*A311	3	#5	STR	25'-9"	81
*A312	3	#5	STR	24'-5"	76
*A313	3	#5	STR	23'-0"	72

BAR	NO.	SIZE	TYPE	LENGTH	WEIGHT
*A314	3	#5	STR	21'-8"	68
*A315	3	#5	STR	20'-3"	63
*A316	3	#5	STR	18'-11"	59
*A317	3	#5	STR	17'-6"	55
*A318	3	#5	STR	16'-2"	51
*A319	3	#5	STR	14'-9"	46
*A320	3	#5	STR	13'-5"	42
*A321	3	#5	STR	12'-0"	38
*A322	3	#5	STR	10'-8"	33
*A323	3	#5	STR	9'-3"	29
*A324	3	#5	STR	7'-11"	25
*A325	3	#5	STR	6'-6"	20
*A326	3	#5	STR	5'-1"	16
*A327	3	#5	STR	3'-9"	12
*A328	3	#5	STR	2'-4"	7
*A329	3	#5	STR	39'-7"	124
*A330	3	#5	STR	38'-3"	120
*A331	3	#5	STR	36'-11"	116
*A332	3	#5	STR	35'-7"	111
*A333	3	#5	STR	34'-3"	107
*A334	3	#5	STR	33'-0"	103
*A335	3	#5	STR	31'-8"	99
*A336	3	#5	STR	30'-4"	95
*A337	3	#5	STR	29'-0"	91
*A338	3	#5	STR	27'-8"	87
*A339	3	#5	STR	26'-4"	82
*A340	3	#5	STR	25'-0"	78
*A341	3	#5	STR	23'-9"	74
*A342	3	#5	STR	22'-5"	70
*A343	3	#5	STR	21'-1"	66
*A344	3	#5	STR	19'-9"	62
*A345	3	#5	STR	18'-5"	58
*A346	3	#5	STR	17'-2"	54
*A347	3	#5	STR	15'-10"	50
*A348	3	#5	STR	14'-6"	45
*A349	3	#5	STR	13'-2"	41
*A350	3	#5	STR	11'-10"	37
* A351	3	#5	STR	10'-7"	33
* A352	3	#5	STR	9'-3"	29
* A353	3	#5	STR	7'-11"	25
* A354	3	#5	STR	6'-7"	21
* A355	3	#5	STR	5'-3"	16
* A356	3	#5	STR	4'-0"	13
* A357	3	#5	STR	2'-8"	8
A401	3	#5	STR	39'-6"	124
A402	3	#5	STR	38'-2"	119
A403	3	#5	STR	36'-9"	115
A404	3	#5	STR	35'-5"	111
A405	3	#5	STR	34'-0"	106
A406	3	#5	STR	32'-8"	102
A407	3	#5	STR	31'-3"	98
A408	3	#5	STR	29'-11"	94
A409	3	#5	STR	28'-6"	89
A410	3	#5	STR	27'-2"	85
A411	3	#5	STR	25'-9"	81
A412	3	#5	STR	24'-5"	76
A413	3	#5	STR	23'-0"	72
A414	3	#5	STR	21'-8"	68
A415	3	#5	STR	20'-3"	63
A416	3	#5	STR	18'-11"	59
A417	3	#5	STR	17'-6"	55
A418	3	#5	STR	16'-2"	51
A419	3	#5	STR	14'-9"	46

BAR	NO.	SIZE	TYPE	LENGTH	WEIGHT
A420	3	#5	STR	13'-5"	42
A421	3	#5	STR	12'-0"	38
A422	3	#5	STR	10'-8"	33
A423	3	#5	STR	9'-3"	29
A424	3	#5	STR	7'-11"	25
A425	3	#5	STR	6'-6"	20
A426	3	#5	STR	5'-1"	16
A427	3	#5	STR	3'-9"	12
A428	3	#5	STR	2'-4"	7
A429	3	#5	STR	39'-7"	124
A430	3	#5	STR	38'-3"	120
A431	3	#5	STR	36'-11"	116
A432	3	#5	STR	35'-7"	111
A433	3	#5	STR	34'-3"	107
A434	3	#5	STR	33'-0"	103
A435	3	#5	STR	31'-8"	99
A436	3	#5	STR	30'-4"	95
A437	3	#5	STR	29'-0"	91
A438	3	#5	STR	27'-8"	87
A439	3	#5	STR	26'-4"	82
A440	3	#5	STR	25'-0"	78
A441	3	#5	STR	23'-9"	74
A442	3	#5	STR	22'-5"	70
A443	3	#5	STR	21'-1"	66
A444	3	#5	STR	19'-9"	62
A445	3	#5	STR	18'-5"	58
A446	3	#5	STR	17'-2"	54
A447	3	#5	STR	15'-10"	50
A448	3	#5	STR	14'-6"	45
A449	3	#5	STR	13'-2"	41
A450	3	#5	STR	11'-10"	37
A451	3	#5	STR	10'-7"	33
A452	3	#5	STR	9'-3"	29
A453	3	#5	STR	7'-11"	25
A454	3	#5	STR	6'-7"	21
A455	3	#5	STR	5'-3"	16
A456	3	#5	STR	4'-0"	13
A457	3	#5	STR	2'-8"	8
* B1	78	#4	STR	24'-6"	1277
B2	220	#5	STR	46'-2"	10593
* B3	117	#6	STR	23'-6"	4130
* B4	38	#6	STR	27'-0"	1541
* B5	117	#4	STR	22'-4"	1745
* B6	78	#4	STR	28'-2"	1468
* B7	39	#6	STR	59'-10"	3505
* B8	38	#6	STR	24'-11"	1422
* B9	39	#4	STR	26'-5"	688
* B10	117	#6	STR	22'-3"	3910
* B11	38	#6	STR	25'-3"	1441
* B12	78	#4	STR	28'-2"	1468
B13	275	#5	STR	51'-2"	14676
* G1	8	#5	STR	31'-2"	260
* J1	212	#4	STR	1'-5"	201
* K1	16	#8	1	18'-2"	776
* K2	16	#8	2	27'-5"	1171
* K3	9	#6	STR	12'-8"	171
K4	30	#4	6	9'-4"	187
K5	30	#4	7	18'-7"	372
K6	6	#4	STR	12'-10"	51
K7	12	#4	STR	13'-3"	106

BAR TYPES

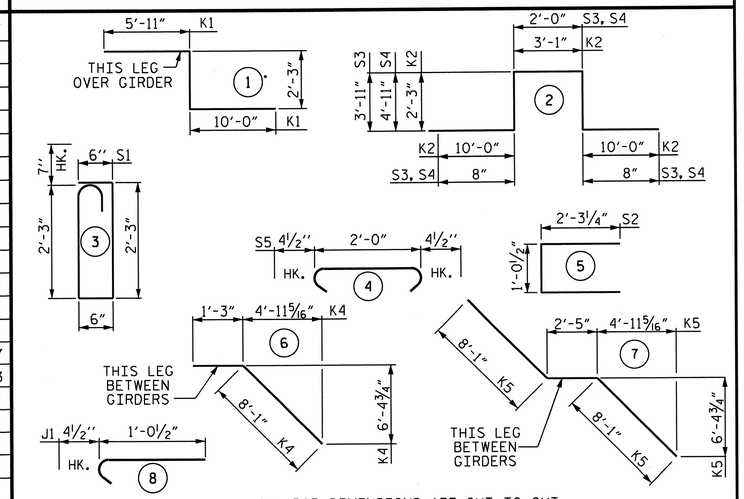

ALL BAR DIMENSIONS ARE OUT TO OUT

BAR	NO.	SIZE	TYPE	LENGTH	WEIGHT
K8	6	#4	STR	13'-6"	54
K9	6	#4	STR	10'-4"	41
K10	6	#4	STR	13'-0"	52
K11	12	#4	STR	13'-6"	108
K12	6	#4	STR	13'-9"	55
K13	6	#4	STR	10'-6"	42
K14	6	#4	STR	13'-3"	53
K15	12	#4	STR	13'-8"	110
K16	6	#4	STR	13'-11"	56
K17	6	#4	STR	10'-7"	42
*K18	18	#6	STR	13'-1"	354
*K19	9	#6	STR	13'-6"	182
* S1	156	#5	3	6'-1"	990
* S2	144	#4	5	5'-7"	537
S3	18	#4	2	11'-2"	134
S4	81	#4	2	13'-2"	712
S5	378	#4	4	2'-9"	694
REINFORCING STEEL				=	67180 LBS.
* EPOXY COATED REINF. STEEL				=	66425 LBS.

PROJECT NO. R-2707B
CLEVELAND COUNTY
STATION: 340+70.00-L-

SHEET 2 OF 2

STATE OF NORTH CAROLINA
DEPARTMENT OF TRANSPORTATION
RALEIGH

SUPERSTRUCTURE
BILL OF MATERIAL
LEFT LANE

NORTH CAROLINA PROFESSIONAL SEAL 15625 ENGINEER BRIAN K. KLAPPENBACH
6-27-2013

REVISIONS						SHEET NO.
NO.	BY:	DATE:	NO.	BY:	DATE:	S-159
1			3			TOTAL SHEETS
2			4			266

DRAWN BY : H. T. BARBOUR DATE : 8-2-11
CHECKED BY : D. A. GLADDEN DATE : 2-12
DESIGN ENGINEER OF RECORD: - DATE : -

STR. #5

STD. NO. BOM2

NOTES

STIRRUPS IN CAP MAY BE SHIFTED AS NECESSARY TO CLEAR ANCHOR BOLTS.

FOR PILE SPLICE DETAILS, SEE END BENT SHEET 3 OF 3.

BACKWALL SHALL BE PLACED BEFORE APPLYING THE EPOXY PROTECTIVE COATING.

THE TOP SURFACE AREAS OF THE END BENT CAPS SHALL BE CURED IN ACCORDANCE WITH THE STANDARD SPECIFICATIONS EXCEPT THE MEMBRANE CURING COMPOUND METHOD SHALL NOT BE USED.

THE TOP SURFACE OF THE CAP EXCEPT THE BRIDGE SEAT BUILDUPS SHALL BE SLOPED TRANSVERSELY FROM THE FILL FACE TO THE BACK FACE AT THE RATE OF 2%.

THE CONCRETE IN THE SHADED AREA OF THE WING SHALL BE POURED AFTER THE BARRIER RAILS ARE CAST IF SLIP FORMING IS USED.

INSTALL THE 4"DIA. DRAIN PIPE THROUGH THE WING WALL AS REQUIRED FOR REINFORCED BRIDGE APPROACH FILLS. SEE THE ROADWAY PLANS. REINFORCING STEEL IN THE WING WALL MAY BE SHIFTED AS NECESSARY TO CLEAR THE DRAIN PIPE.

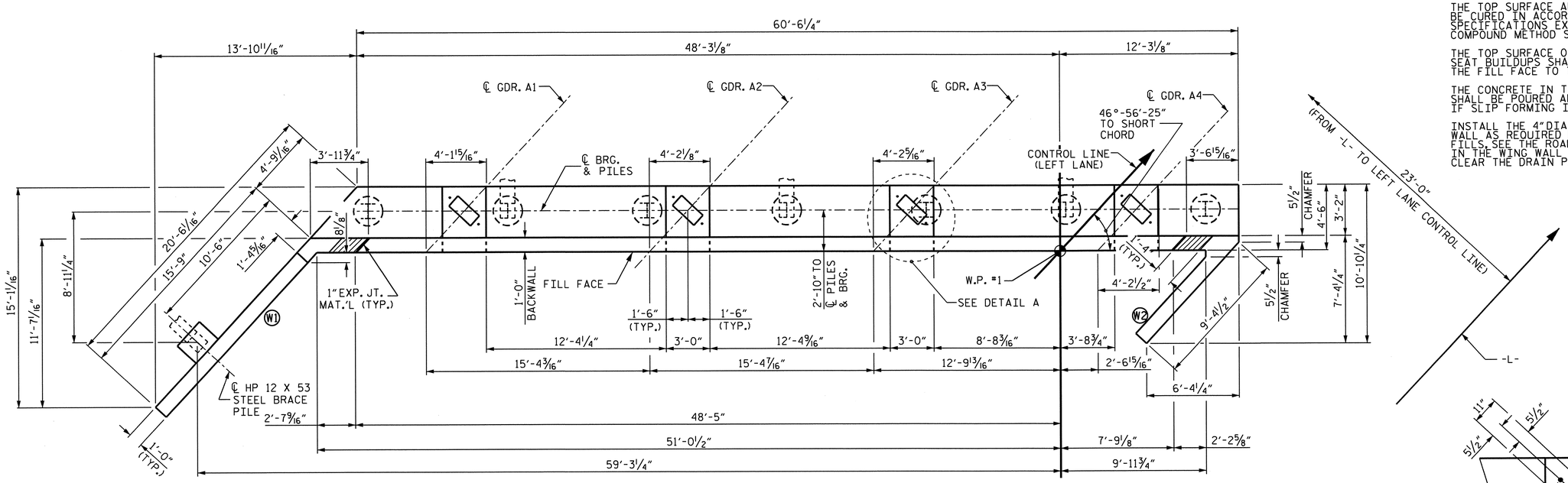

PLAN

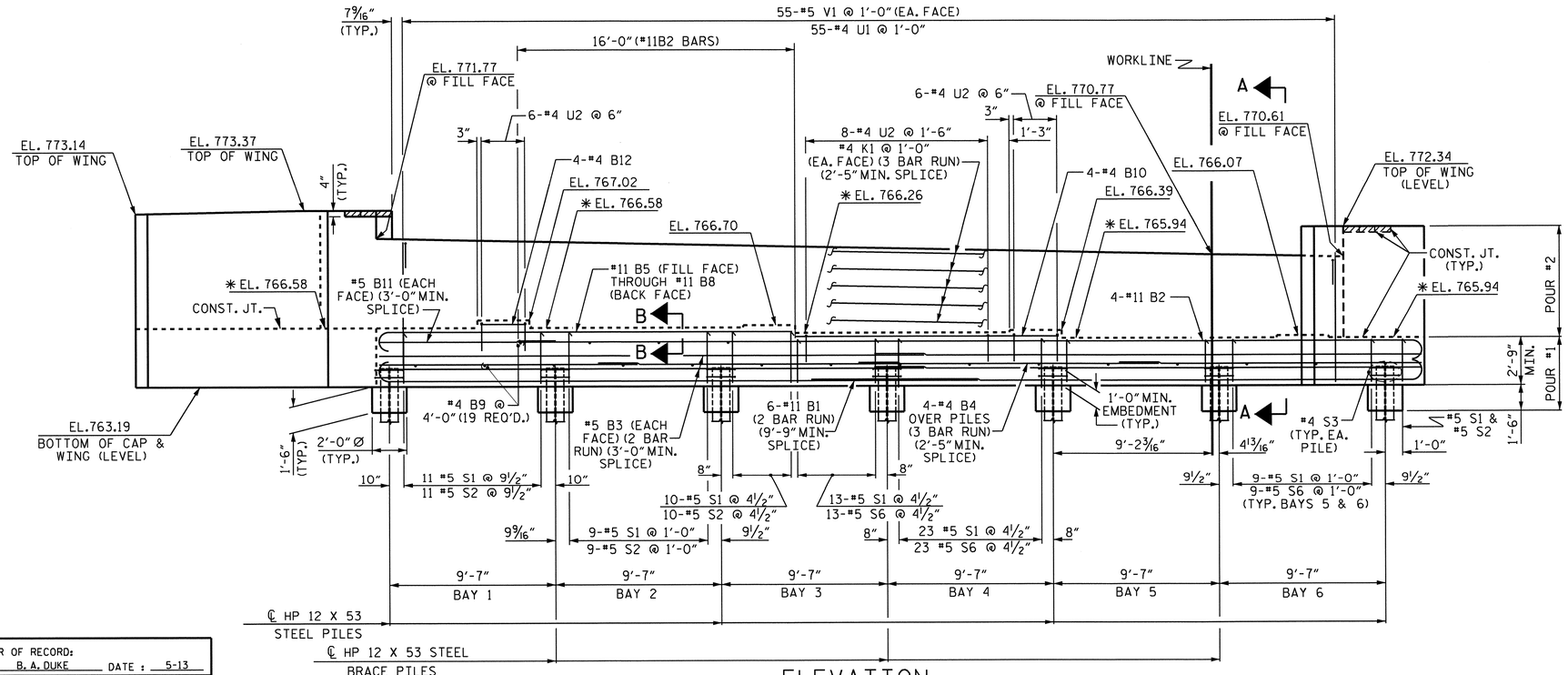

ELEVATION

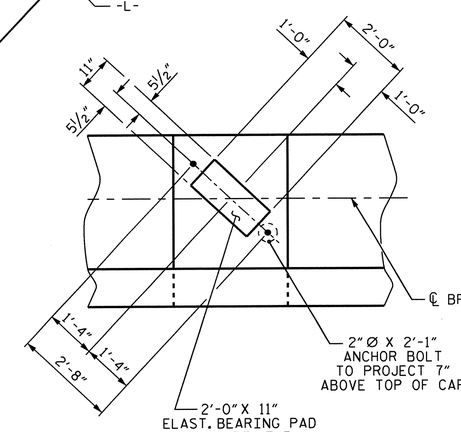

DETAIL A

(DIMENSIONS TYP. EA. BRG.)
(PILE NOT SHOWN FOR CLARITY)

PROJECT NO. R-2707B
CLEVELAND COUNTY
STATION: 340+70.00 -L-

SHEET 1 OF 3

STATE OF NORTH CAROLINA
DEPARTMENT OF TRANSPORTATION
RALEIGH

SUBSTRUCTURE END BENT #1 (LEFT LANE)

NORTH CAROLINA PROFESSIONAL SEAL 15825 ENGINEER BRUCE D. KLAPPENBERGER
6-27-2013

DESIGN ENGINEER OF RECORD: B. A. DUKE	DATE: 5-13
DRAWN BY: H. T. BARBOUR	DATE: 4-20-12
CHECKED BY: D. A. GLADDEN	DATE: 1-20-13

REVISIONS								SHEET NO.
NO.	BY:	DATE:	NO.	BY:	DATE:			S-160
1			3					TOTAL SHEETS
2			4					266

STR. #5

24-JUN-2013 11:15
K:\Structures\Plans\Bailey\STR5and6\TBARBOUR\Microstation\LEFT LANE\SUBSTRUCTURE\R-2707B_SD_E*.dgn
tbarbour

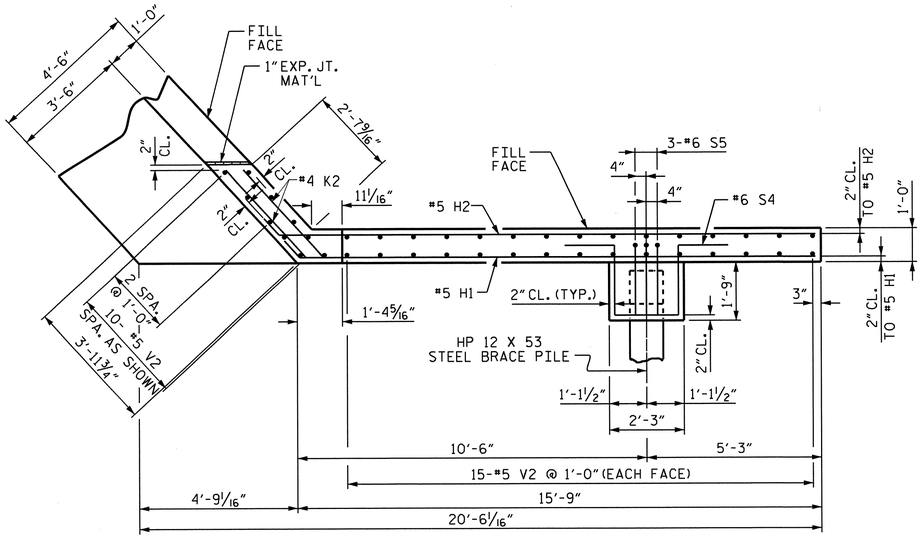

PLAN OF LEFT WING (W1)

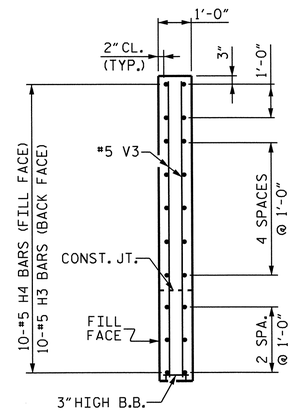

SECTION X-X

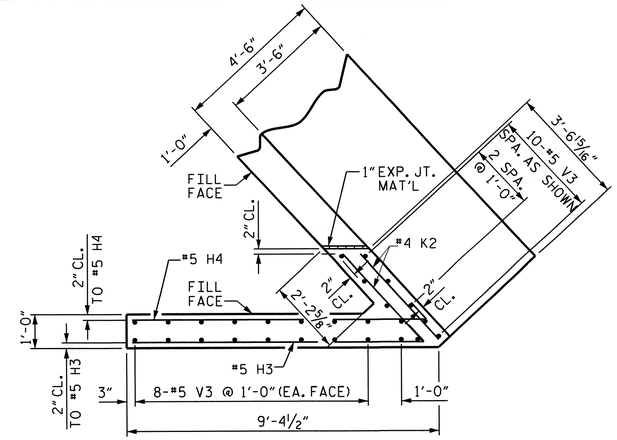

PLAN OF RIGHT WING (W2)

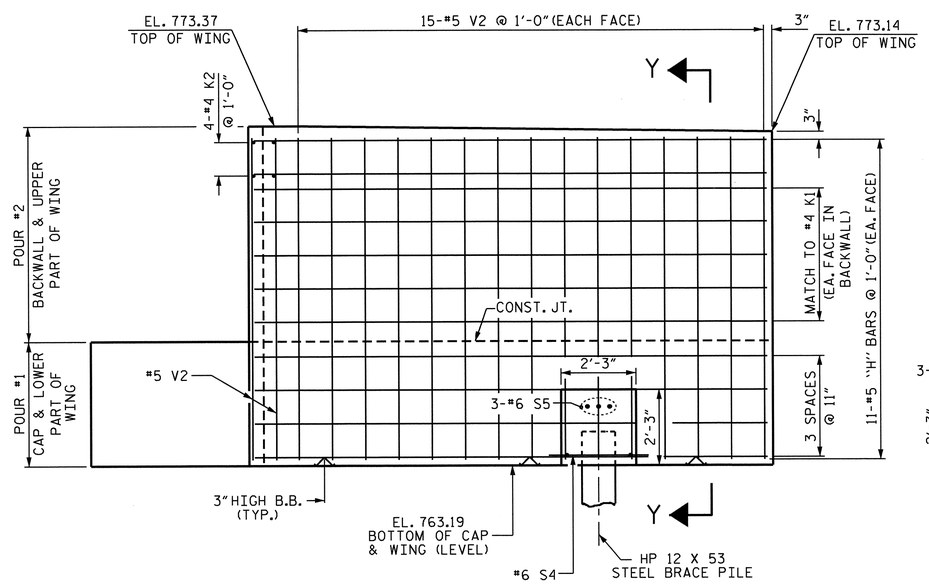

ELEVATION OF LEFT WING (W1)

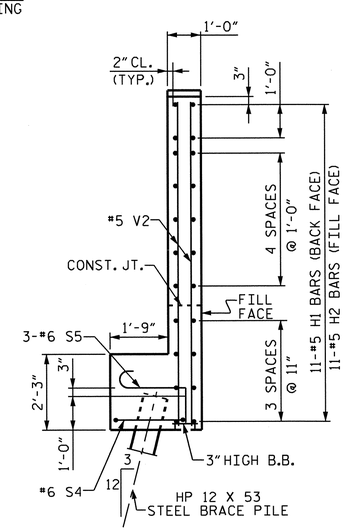

SECTION Y-Y

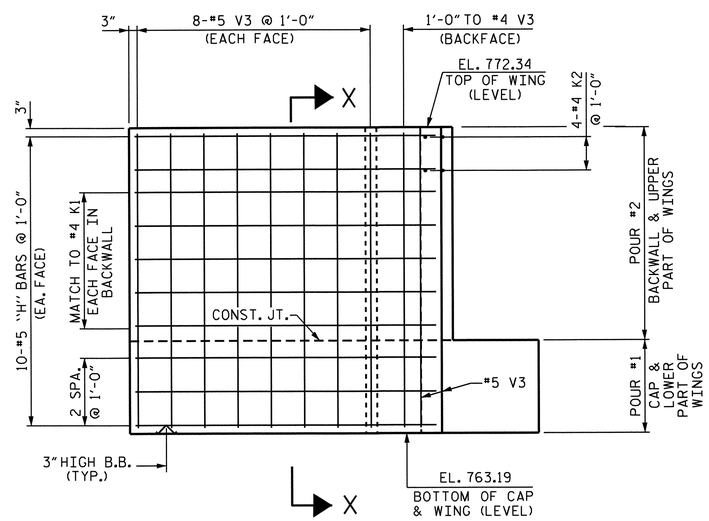

ELEVATION OF RIGHT WING (W2)

NORTH CAROLINA PROFESSIONAL SEAL 15825 ENGINEER BRACE D. KLAPPENBACH
6-27-2013

PROJECT NO. R-2707B
CLEVELAND COUNTY
STATION: 340+70.00 -L-

SHEET 2 OF 3

STATE OF NORTH CAROLINA
DEPARTMENT OF TRANSPORTATION
RALEIGH

SUBSTRUCTURE
END BENT #1
(LEFT LANE)

REVISIONS						SHEET NO.
NO.	BY:	DATE:	NO.	BY:	DATE:	S-161
1			3			TOTAL SHEETS
2			4			266

DESIGN ENGINEER OF RECORD: B. A. DUKE DATE: 6-13
DRAWN BY: H. T. BARBOUR DATE: 4-18-12
CHECKED BY: D. A. GLADDEN DATE: 1-20-13

24-JUN-2013 11:25
K:\Structures\Plans\Bailey\STR5and6\TBARBOUR\Microstation\LEFT LANE\SUBSTRUCTURE\R-2707B_SD_E*.dgn
tbarbour

STR. #5

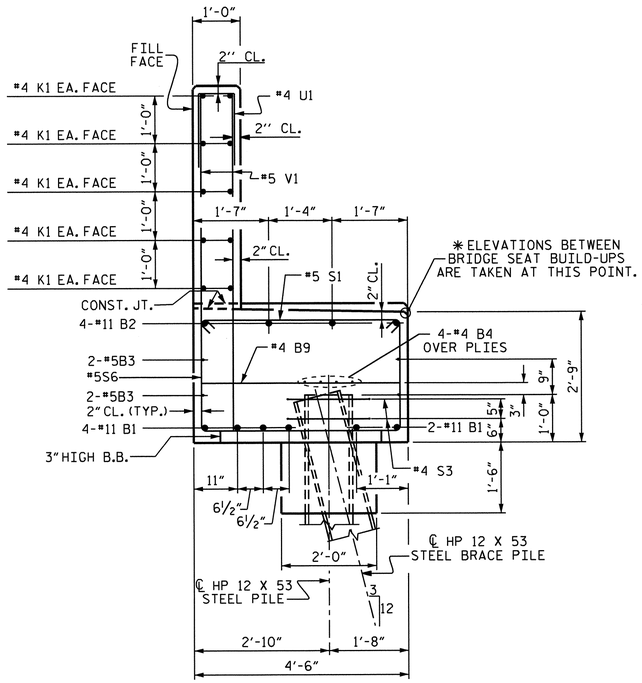

SECTION A-A

(SEE SHEET 1 OF 3)

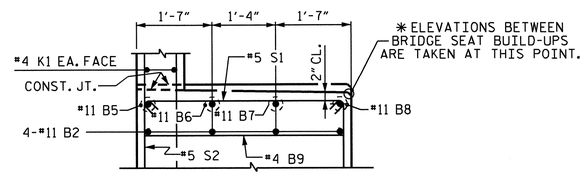

SECTION B-B

(SEE SHEET 1 OF 3)

BAR TYPES

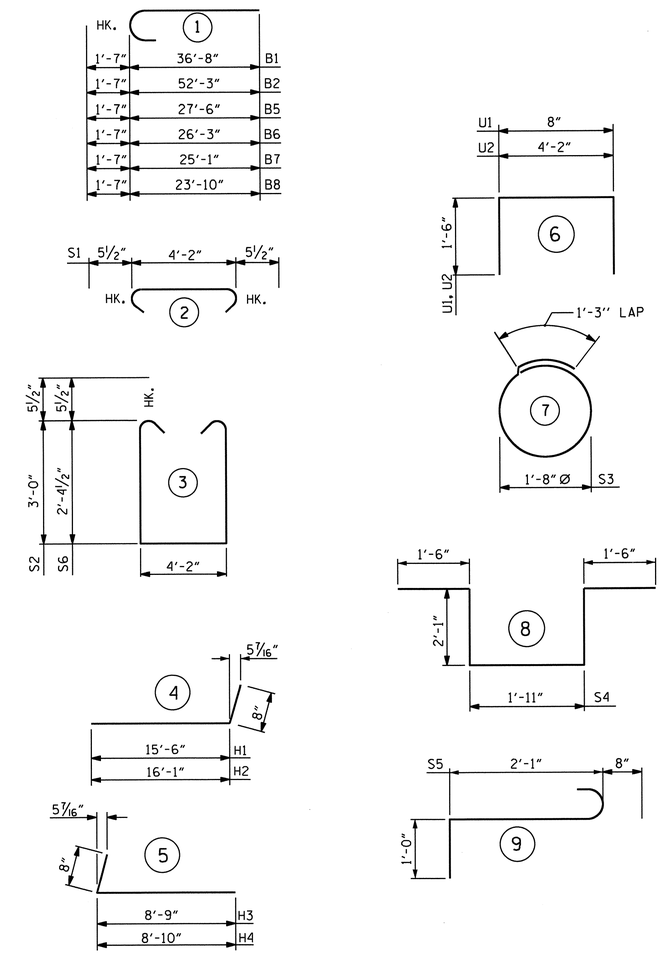

ALL BAR DIMENSIONS ARE OUT TO OUT.

BILL OF MATERIAL

END BENT #1

BAR	NO.	SIZE	TYPE	LENGTH	WEIGHT
B1	12	11	1	38'-3"	2439
B2	4	11	1	53'-10"	1144
B3	8	5	STR	33'-5"	279
B4	12	4	STR	22'-4"	179
B5	1	11	1	29'-1"	155
B6	1	11	1	27'-10"	148
B7	1	11	1	26'-8"	142
B8	1	11	1	25'-5"	135
B9	19	4	STR	4'-2"	53
B10	4	4	STR	15'-3"	41
B11	2	5	STR	14'-6"	30
B12	4	4	STR	2'-8"	7
H1	11	5	4	16'-2"	185
H2	11	5	4	16'-9"	192
H3	10	5	5	9'-5"	98
H4	10	5	5	9'-6"	99
K1	30	4	STR	23'-0"	461
K2	8	4	STR	3'-5"	18
S1	85	5	2	5'-1"	451
S2	30	5	3	11'-2"	349
S3	14	4	7	6'-6"	61
S4	1	6	8	9'-1"	14
S5	3	6	9	3'-9"	17
S6	55	5	3	9'-10"	564
U1	55	4	6	3'-8"	135
U2	20	4	6	7'-2"	96
V1	110	5	STR	7'-1"	813
V2	40	5	STR	9'-7"	400
V3	27	5	STR	8'-9"	246
REINFORCING STEEL				LBS	8951

CLASS A CONCRETE BREAKDOWN

POUR #1

CAP, LOWER PART OF WINGS, CONCRETE COLLARS & PILE CAP — 36.6 CU. YDS.

POUR #2

BACKWALL & UPPER PART OF WINGS — 15.9 CU. YDS.

CLASS A CONCRETE TOTAL — 52.5 CU. YDS.

HP 12 x 53 STEEL PILES

NO. 8 LIN. FT. 325

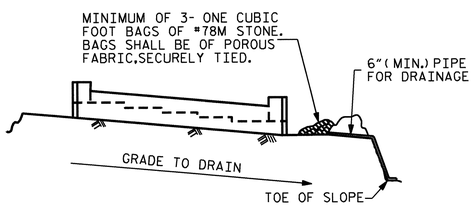

BAGGED STONE AND PIPE SHALL BE PLACED IMMEDIATELY AFTER COMPLETION OF END BENT EXCAVATION. PIPE MAY BE EITHER CONCRETE, CORRUGATED STEEL, CORRUGATED ALUMINUM ALLOY, OR CORRUGATED PLASTIC. PERFORATED PIPE WILL NOT BE ALLOWED.

BAGGED STONE SHALL REMAIN IN PLACE UNTIL THE ENGINEER DIRECTS THAT IT BE REMOVED. THE CONTRACTOR SHALL REMOVE AND DISPOSE OF SILT ACCUMULATIONS AT BAGGED STONE WHEN SO DIRECTED BY THE ENGINEER. BAGS SHALL BE REMOVED AND REPLACED WHENEVER THE ENGINEER DETERMINES THAT THEY HAVE DETERIORATED AND LOST THEIR EFFECTIVENESS.

NO SEPARATE PAYMENT WILL BE MADE FOR THIS WORK AND THE ENTIRE COST OF THIS WORK SHALL BE INCLUDED IN THE UNIT CONTRACT PRICE BID FOR THE SEVERAL PAY ITEMS.

TEMPORARY DRAINAGE AT END BENT

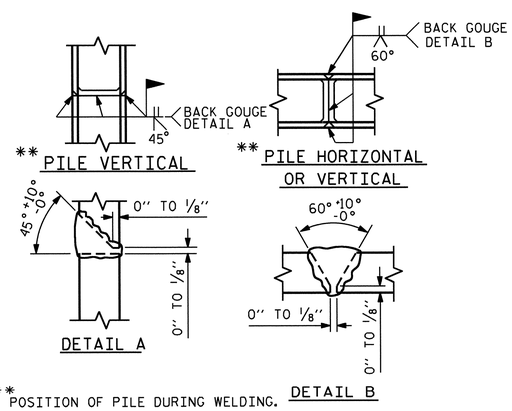

** POSITION OF PILE DURING WELDING.

PILE SPLICE DETAILS

PROJECT NO. R-2707B

CLEVELAND COUNTY

STATION: 340+70.00 -L-

SHEET 3 OF 3

STATE OF NORTH CAROLINA
DEPARTMENT OF TRANSPORTATION
RALEIGH

SUBSTRUCTURE
END BENT #1
(LEFT LANE)

NORTH CAROLINA PROFESSIONAL SEAL 15825 ENGINEER D. K. APPENBACH BRIDGE

6-27-2012

REVISIONS						SHEET NO.
NO.	BY:	DATE:	NO.	BY:	DATE:	S-162
1			3			TOTAL SHEETS
2			4			266

DESIGN ENGINEER OF RECORD: B. A. DUKE DATE: 6-13

DRAWN BY: H. T. BARBOUR DATE: 4-25-12

CHECKED BY: D. A. GLADDEN DATE: 1-20-13

NOTES

STIRRUPS IN CAP MAY BE SHIFTED AS NECESSARY TO CLEAR ANCHOR BOLTS.

THE CONTRACTOR'S ATTENTION IS CALLED TO THE FACT THAT THE LONGITUDINAL REINFORCEMENT FOR THE DRILLED PIERS IS DETAILED WITH 3 FEET OF EXTRA LENGTH.

ALL STEEL IN THE DRILLED PIERS IS INCLUDED IN THE PAY ITEMS FOR "REINFORCING STEEL" AND "SPIRAL COLUMN REINFORCING STEEL."

HOOKS ON V1 BARS MAY BE TURNED AS NECESSARY FOR PLACING REINFORCING STEEL.

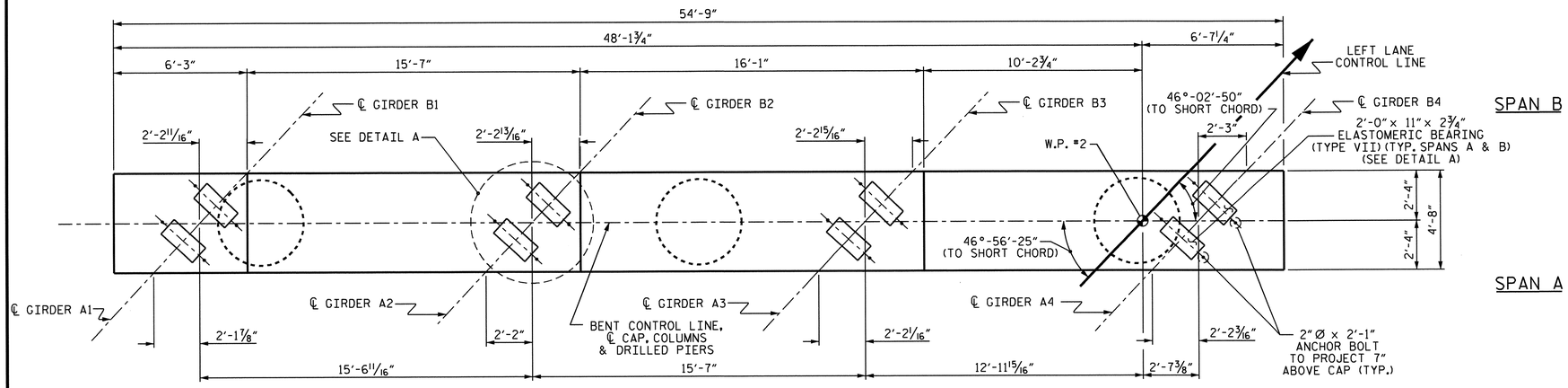

PLAN

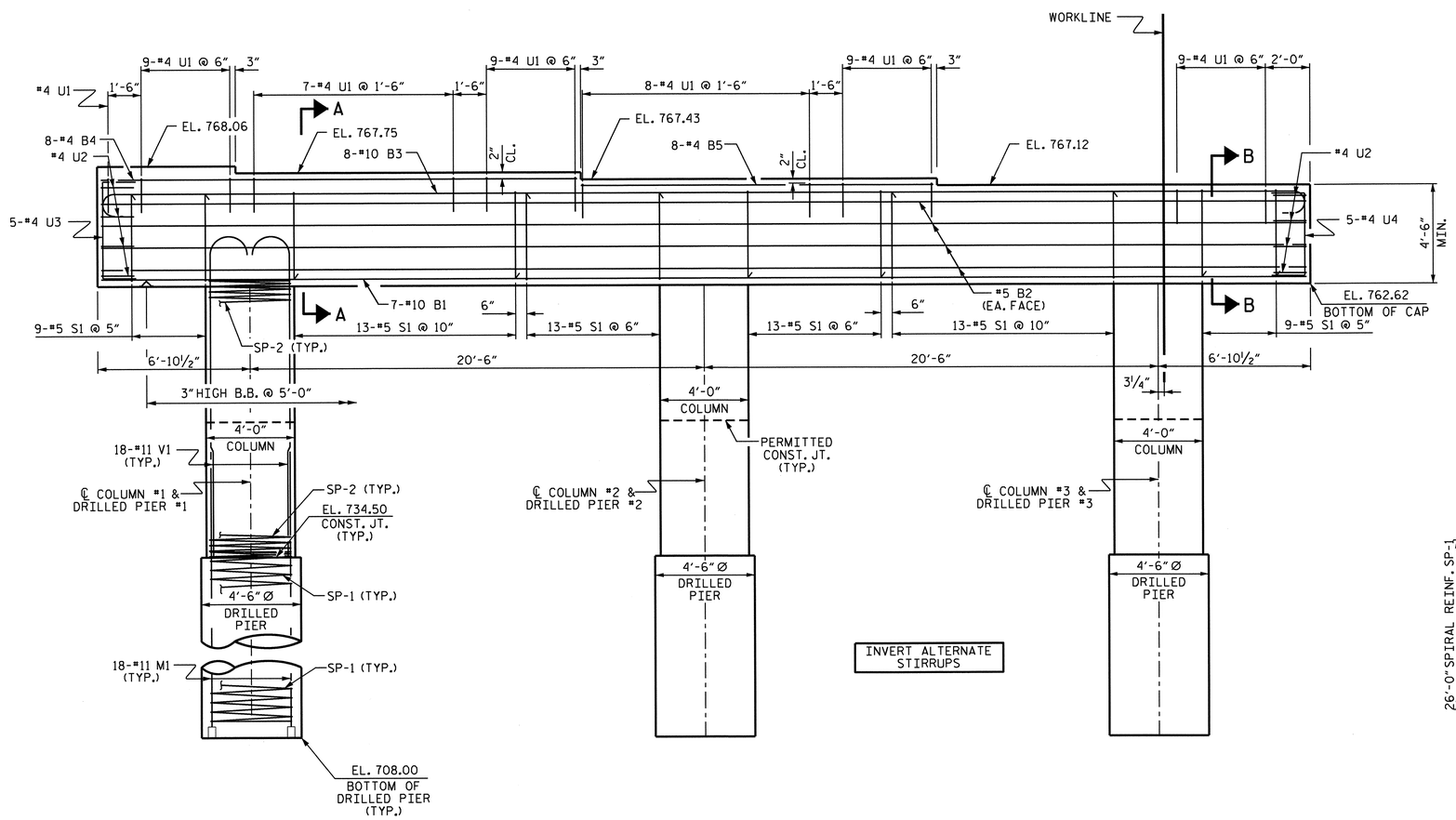

ELEVATION

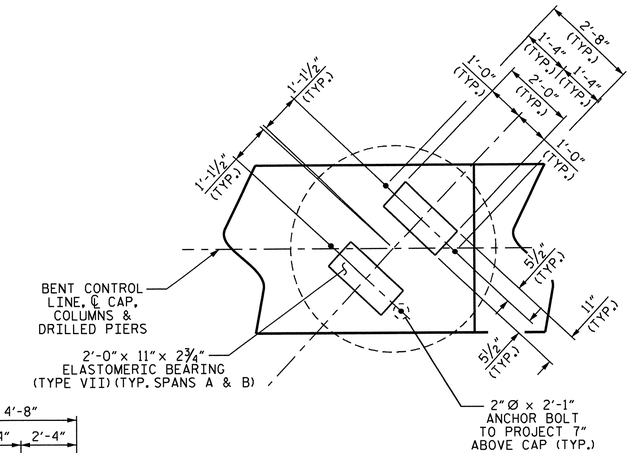

DETAIL A

(TYP. ALL BEARINGS)

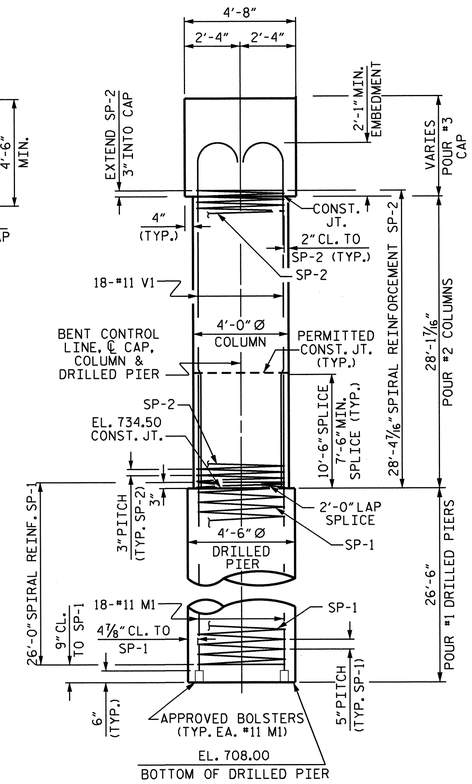

END ELEVATION

NORTH CAROLINA PROFESSIONAL SEAL 15825 ENGINEER BRUCE D. KLAPPENBACH 6-27-2013

PROJECT NO. R-2707B

CLEVELAND COUNTY

STATION: 340+70.00-L-

SHEET 1 OF 2

STATE OF NORTH CAROLINA
DEPARTMENT OF TRANSPORTATION
RALEIGH

SUBSTRUCTURE
BENT #1
(LEFT LANE)

REVISIONS						SHEET NO.
NO.	BY:	DATE:	NO.	BY:	DATE:	S-163
1			3			TOTAL SHEETS
2			4			266

STR. #5

DESIGN ENGINEER OF RECORD: S. T. CHAMPION DATE: 5-13

DRAWN BY: H. T. BARBOUR DATE: 3-07-12

CHECKED BY: D. A. GLADDEN DATE: 8-12

24-JUN-2013 11:56
K:\Structures\Plans\Bailey\STR5and6\TBARBOUR\Microstation\LEFT LANE\SUBSTRUCTURE\R-2707B_SD_B*.dgn
tbarbour

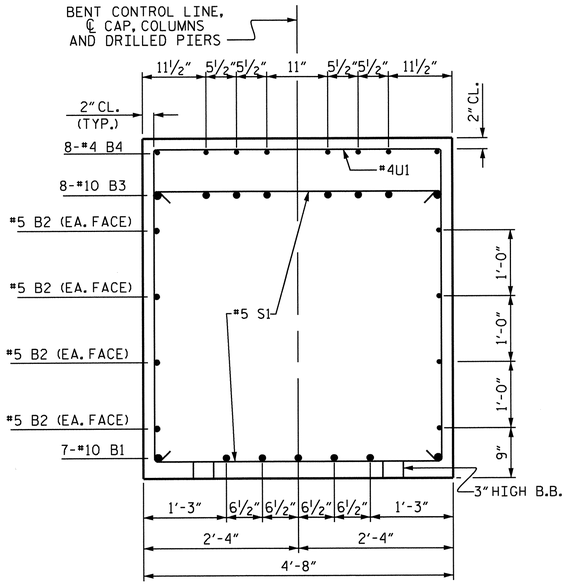

SECTION A-A

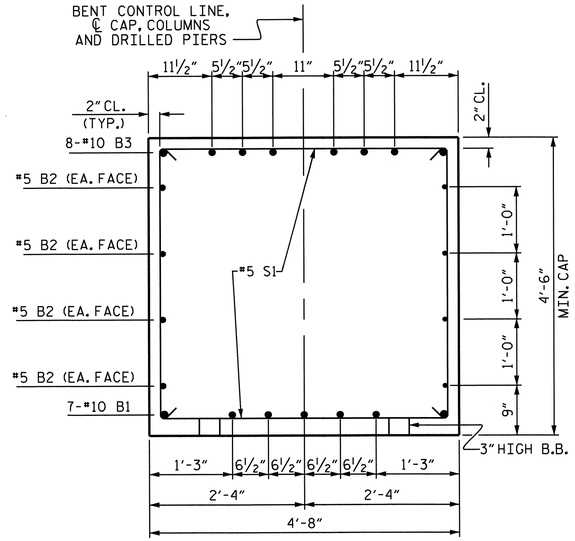

SECTION B-B

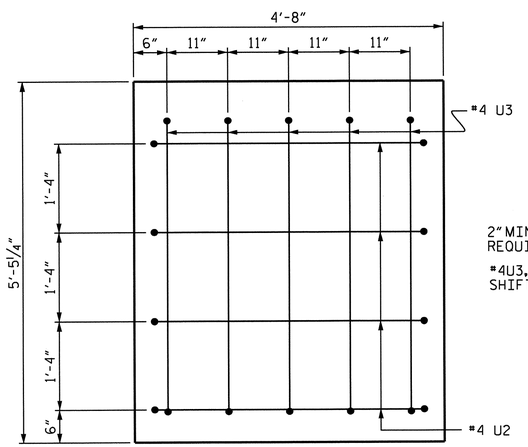

LEFT END VIEW

2" MIN. CONCRETE COVER FROM END OF CAP REQUIRED FOR ALL #4U3, #4U2 AND #4U4 BARS.

#4U3, #4U2 AND #4U4 BARS MAY BE SHIFTED UP TO 2" TO CLEAR "B" BARS.

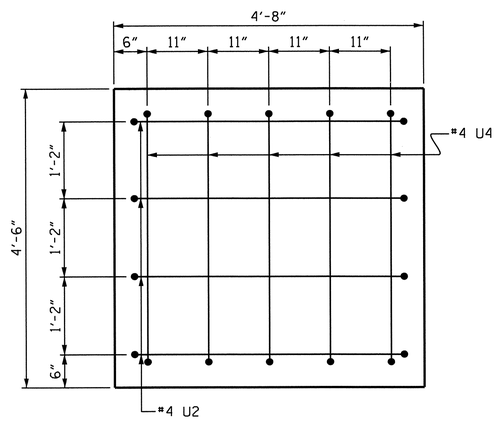

RIGHT END VIEW

BAR TYPES

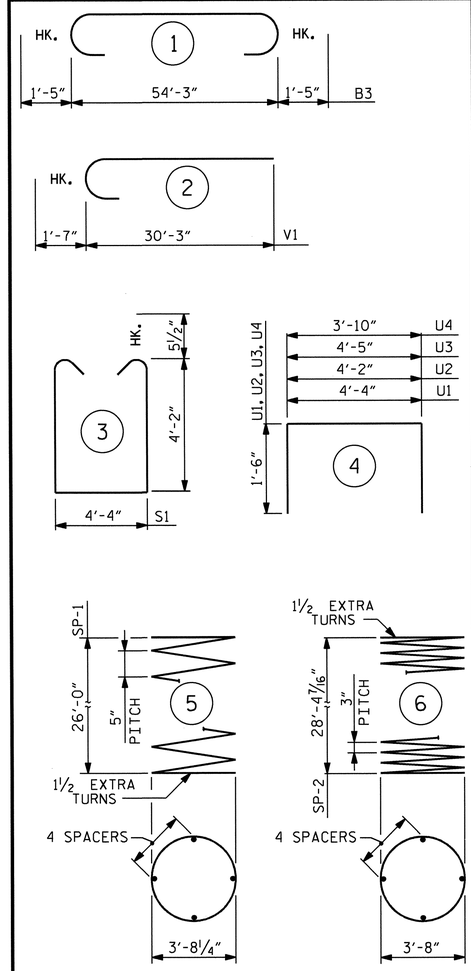

ALL BAR DIMENSIONS ARE OUT TO OUT.

BILL OF MATERIAL

BENT #1

BAR	NO.	SIZE	TYPE	LENGTH	WEIGHT
B1	7	#10	STR.	54'-5"	1639
B2	8	#5	STR.	54'-5"	454
B3	8	#10	1	57'-1"	1965
B4	8	#4	STR.	21'-6"	115
B5	8	#4	STR.	16'-2"	86
M1	54	#11	STR.	36'-6"	10472
S1	70	#5	3	13'-7"	992
U1	51	#4	4	7'-4"	250
U2	8	#4	4	7'-2"	38
U3	5	#4	4	7'-5"	25
U4	5	#4	4	6'-10"	23
V1	54	#11	2	31'-10"	9133
REINFORCING STEEL (LBS.)					25192
SP-1	3	*	5	730'-5"	2285
SP-2	3	**	6	1308'-2"	2622
SPIRAL REINFORCING STEEL (LBS.)					4907

CLASS A CONCRETE
POUR #2 (COLUMNS) 39.3 C.Y.
POUR #3 (CAP) 46.2 C.Y.
TOTAL 85.5 C.Y.

DRILLED PIERS

DRILLED PIER CONCRETE
POUR #1 (DRILLED PIERS) 46.8 C.Y.
4'-6" Ø DRILLED PIERS IN SOIL 51.00 LIN. FT.
4'-6" Ø DRILLED PIERS NOT IN SOIL 28.50 LIN. FT.
4'-6" Ø PERMANENT STEEL CASING 49.50 LIN. FT.
CSL TUBES 420.0 LIN. FT.

* THE SP-1 REINFORCING STEEL SHALL BE W31 OR D-31 COLD DRAWN WIRE OR #5 PLAIN OR DEFORMED BAR.

** THE SP-2 SPIRAL REINFORCING STEEL SHALL BE W20 OR D-20 COLD DRAWN WIRE OR #4 PLAIN OR DEFORMED BAR.

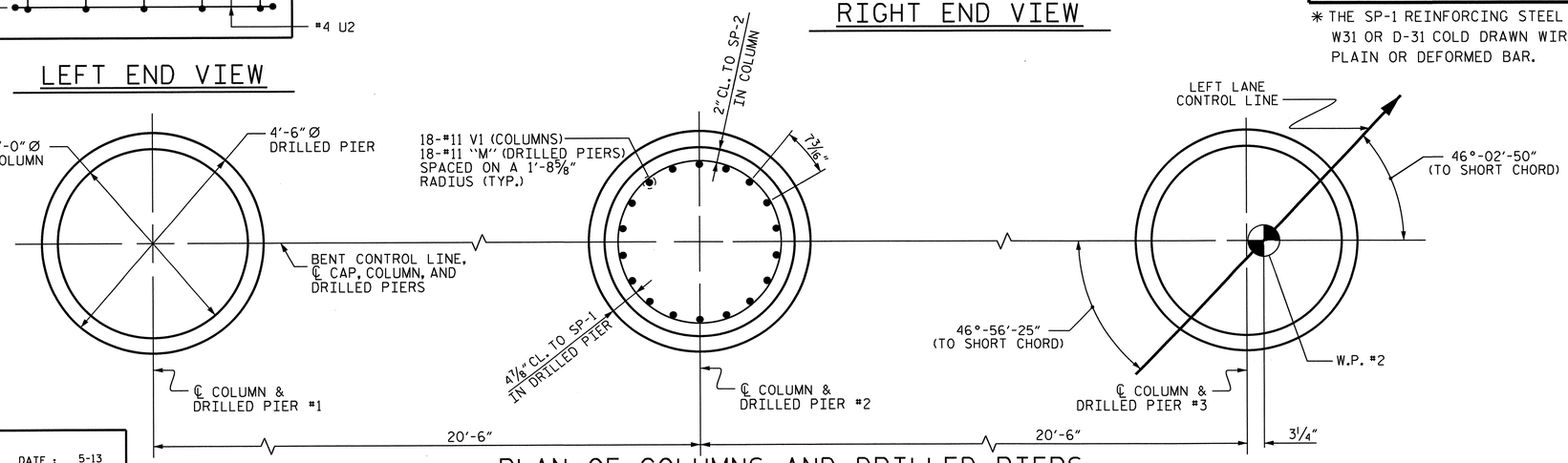

PLAN OF COLUMNS AND DRILLED PIERS

ALL COLUMNS AND DRILLED PIERS ARE SIMILAR

PROJECT NO. R-2707B
CLEVELAND COUNTY
STATION: 340+70.00-L-

SHEET 2 OF 2

STATE OF NORTH CAROLINA
DEPARTMENT OF TRANSPORTATION
RALEIGH

SUBSTRUCTURE
BENT #1
(LEFT LANE)

NORTH CAROLINA PROFESSIONAL SEAL 15825 ENGINEER BRUCE O. KLAPPENBACH
6-27-2013

DESIGN ENGINEER OF RECORD: S. T. CHAMPION	DATE : 5-13
DRAWN BY : H. T. BARBOUR	DATE : 3-07-12
CHECKED BY : D. A. GLADDEN	DATE : 8-12

REVISIONS						SHEET NO.
NO.	BY:	DATE:	NO.	BY:	DATE:	S-164
1			3			TOTAL SHEETS
2			4			266

STR. #5

14-MAY-2013 08:47
k:\Structures\Plans\Bailey\STR5and6\TBARBOUR\Microstation\LEFT LANE\SUBSTRUCTURE\R-2707B_SD_B*.dgn
tbarbour

NOTES

STIRRUPS IN CAP MAY BE SHIFTED AS NECESSARY TO CLEAR ANCHOR BOLTS.

THE CONTRACTOR'S ATTENTION IS CALLED TO THE FACT THAT THE LONGITUDINAL REINFORCEMENT FOR THE DRILLED PIERS IS DETAILED WITH 3 FEET OF EXTRA LENGTH.

ALL STEEL IN THE DRILLED PIERS IS INCLUDED IN THE PAY ITEMS FOR "REINFORCING STEEL" AND "SPIRAL COLUMN REINFORCING STEEL."

HOOKS ON V1 BARS MAY BE TURNED AS NECESSARY FOR PLACING REINFORCING STEEL.

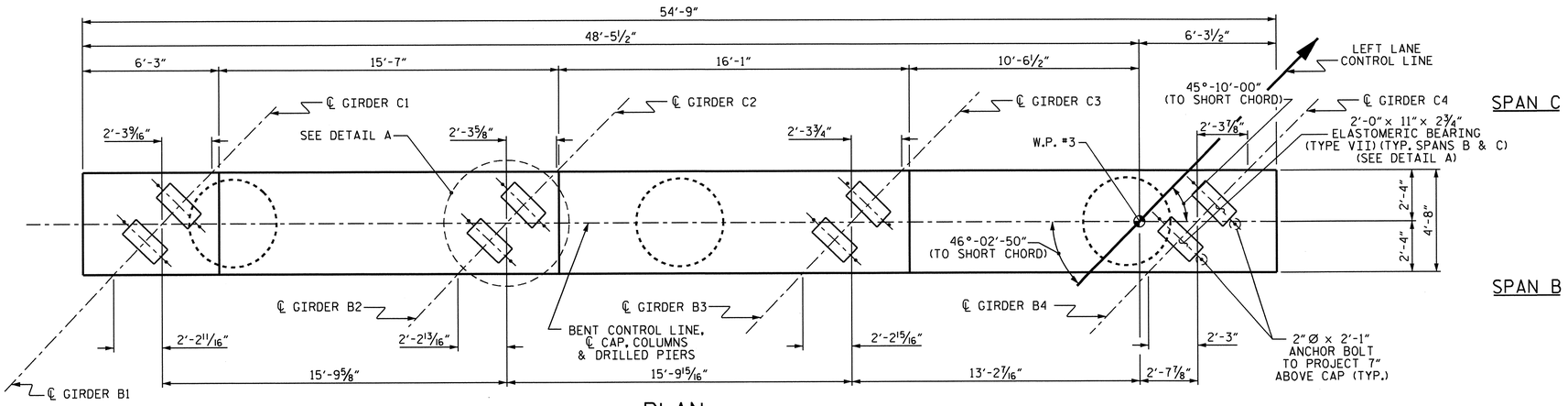

PLAN

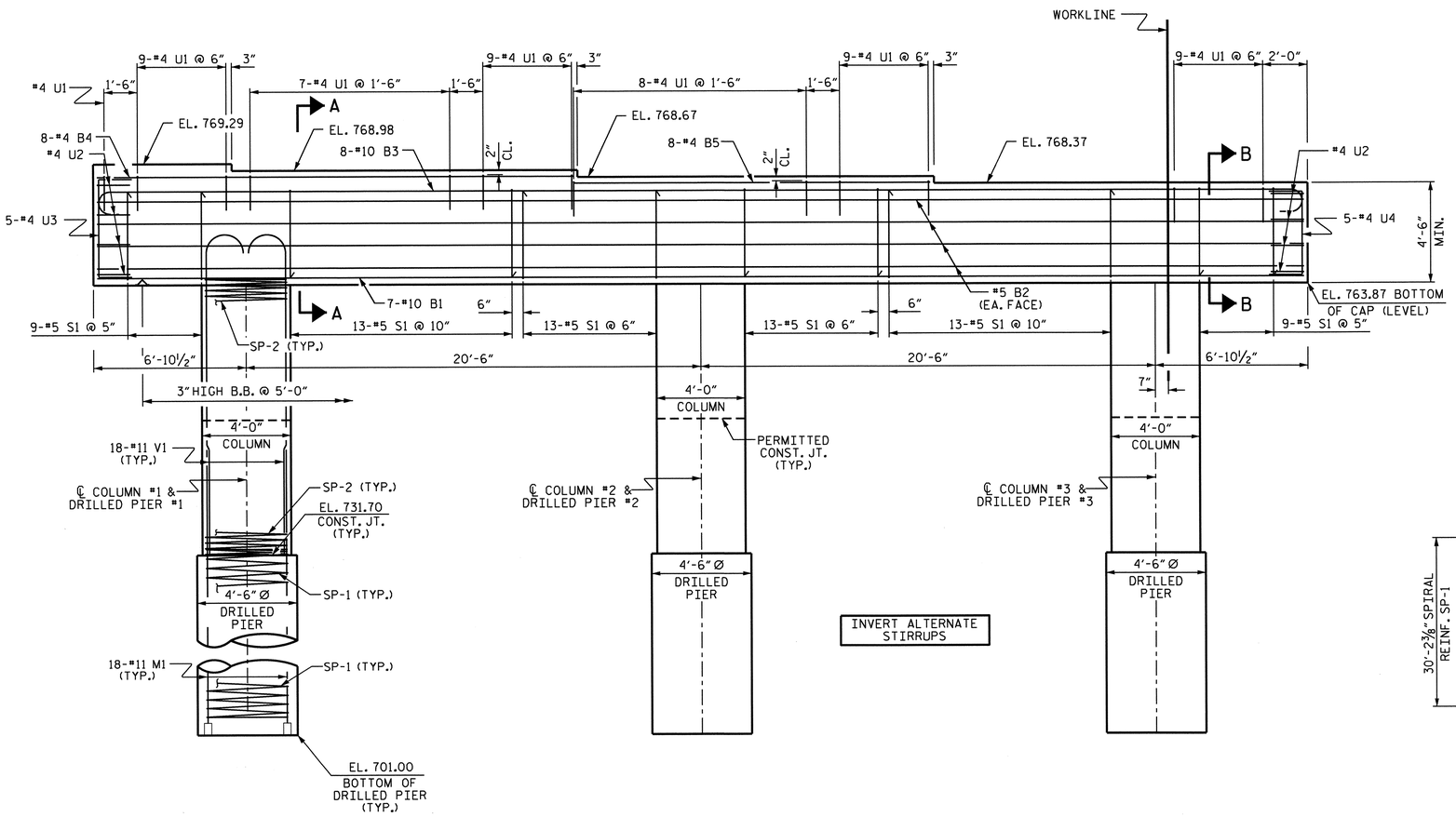

ELEVATION

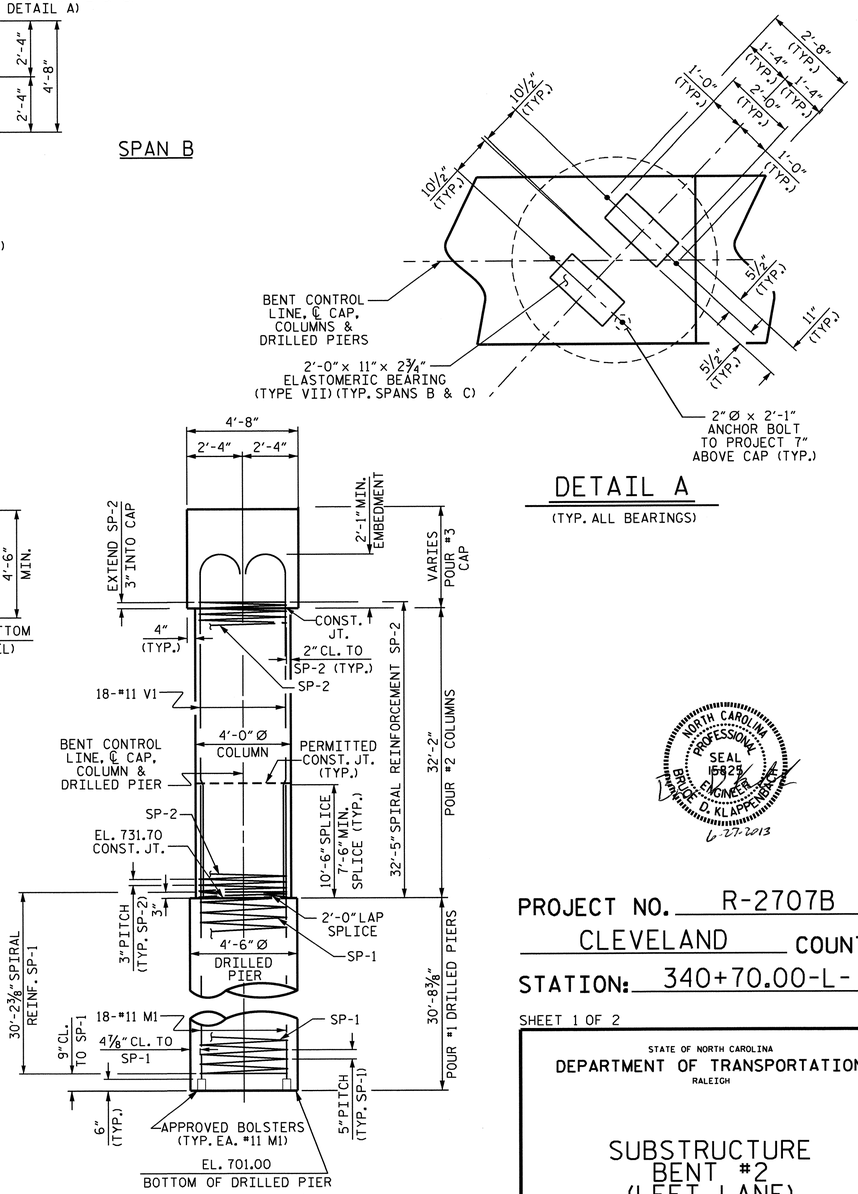

END ELEVATION

DETAIL A

(TYP. ALL BEARINGS)

NORTH CAROLINA PROFESSIONAL SEAL 15825 ENGINEER BRUCE O. KLAPPENBACH
6-27-2013

PROJECT NO. R-2707B

CLEVELAND COUNTY

STATION: 340+70.00-L-

SHEET 1 OF 2

STATE OF NORTH CAROLINA
DEPARTMENT OF TRANSPORTATION
RALEIGH

SUBSTRUCTURE
BENT #2
(LEFT LANE)

REVISIONS						SHEET NO.
NO.	BY:	DATE:	NO.	BY:	DATE:	S-165
1			3			TOTAL SHEETS
2			4			266

STR. #5

DESIGN ENGINEER OF RECORD: S. T. CHAMPION		DATE :	5-13
DRAWN BY : H. T. BARBOUR		DATE :	3-07-12
CHECKED BY : D. A. GLADDEN		DATE :	8-12

24-JUN-2013 11:56
R:\Structures\Plans\Bailey\STR5and6\TBARBOUR\Microstation\LEFT LANE\SUBSTRUCTURE\R-2707B_SD_B*.dgn
tbarbour

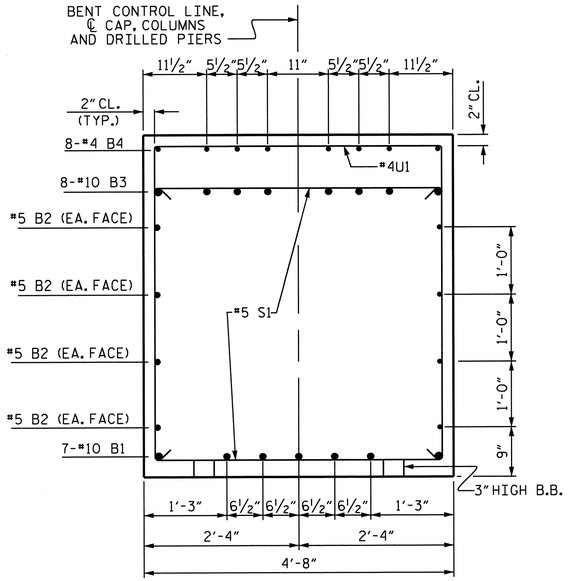

SECTION A-A

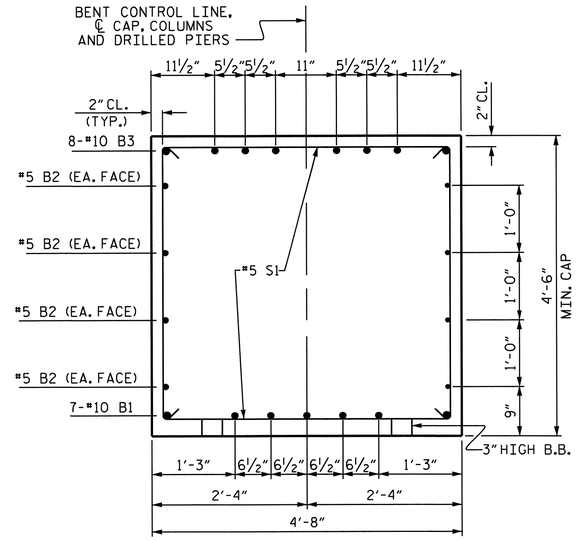

SECTION B-B

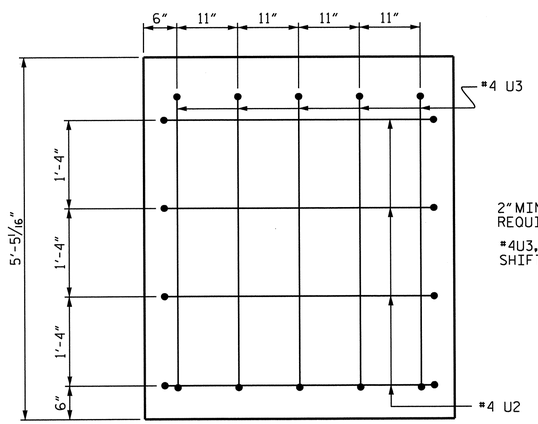

2" MIN. CONCRETE COVER FROM END OF CAP REQUIRED FOR ALL #4U3, #4U2 AND #4U4 BARS.

#4U3, #4U2 AND #4U4 BARS MAY BE SHIFTED UP TO 2" TO CLEAR "B" BARS.

LEFT END VIEW

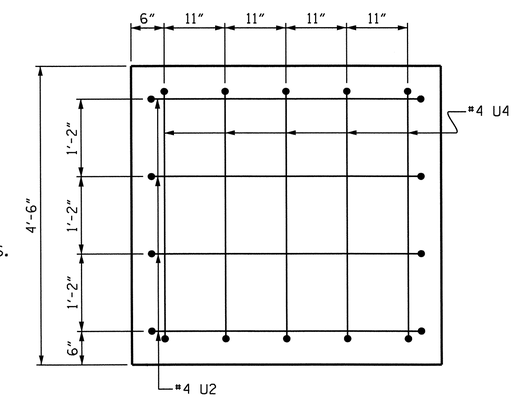

RIGHT END VIEW

BAR TYPES

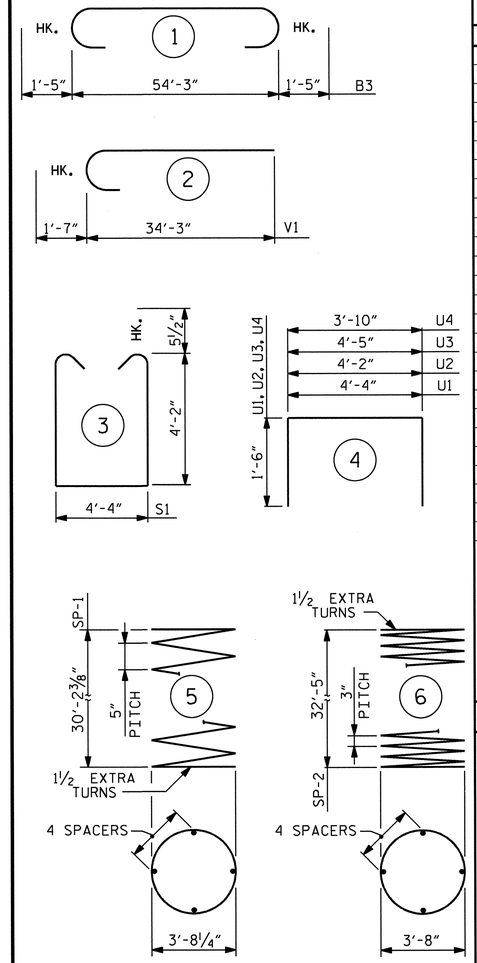

ALL BAR DIMENSIONS ARE OUT TO OUT.

BILL OF MATERIAL

BENT #2

BAR	NO.	SIZE	TYPE	LENGTH	WEIGHT
B1	7	#10	STR.	54'-5"	1639
B2	8	#5	STR.	54'-5"	454
B3	8	#10	1	57'-1"	1965
B4	8	#4	STR.	21'-6"	115
B5	8	#4	STR.	16'-2"	86
M1	54	#11	STR.	40'-9"	11691
S1	70	#5	3	13'-7"	992
U1	51	#4	4	7'-4"	250
U2	8	#4	4	7'-2"	38
U3	5	#4	4	7'-5"	25
U4	5	#4	4	6'-10"	23
V1	54	#11	2	35'-10"	10281
REINFORCING STEEL (LBS.)					27559
SP-1	3	*	5	844'-7"	2643
SP-2	3	**	6	1493'-0"	2992
SPIRAL REINFORCING STEEL (LBS.)					5635

CLASS A CONCRETE
POUR #2 (COLUMNS) 44.9 C.Y.
POUR #3 (CAP) 46.2 C.Y.

TOTAL 91.1 C.Y.

DRILLED PIERS

DRILLED PIER CONCRETE
POUR #1 (DRILLED PIERS) 54.2 C.Y.

4'-6" Ø DRILLED PIERS IN SOIL 51.60 LIN. FT.

4'-6" Ø DRILLED PIERS NOT IN SOIL 40.50 LIN. FT.

4'-6" Ø PERMANENT STEEL CASING 41.10 LIN. FT.

CSL TUBES 483.0 LIN. FT.

* THE SP-1 REINFORCING STEEL SHALL BE W31 OR D-31 COLD DRAWN WIRE OR #5 PLAIN OR DEFORMED BAR.

** THE SP-2 SPIRAL REINFORCING STEEL SHALL BE W20 OR D-20 COLD DRAWN WIRE OR #4 PLAIN OR DEFORMED BAR.

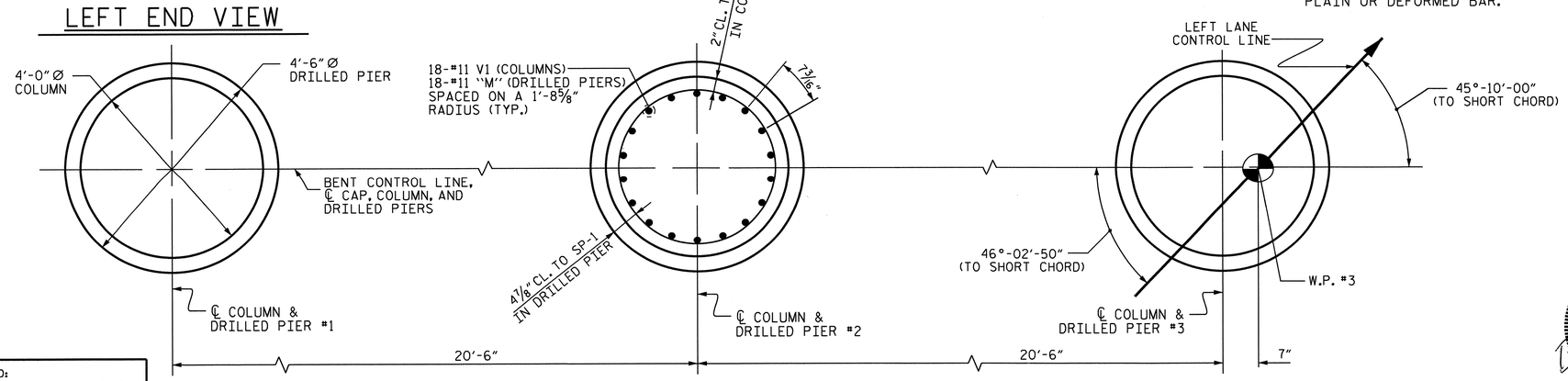

PLAN OF COLUMNS AND DRILLED PIERS

ALL COLUMNS AND DRILLED PIERS ARE SIMILAR

PROJECT NO. R-2707B
CLEVELAND COUNTY
STATION: 340+70.00-L-

SHEET 2 OF 2

STATE OF NORTH CAROLINA
DEPARTMENT OF TRANSPORTATION
RALEIGH

SUBSTRUCTURE BENT #2 (LEFT LANE)

NORTH CAROLINA PROFESSIONAL SEAL 15825 ENGINEER BRUCE D. KLAPPENBACH 6-27-2013

REVISIONS							SHEET NO.
NO.	BY:	DATE:	NO.	BY:	DATE:		S-166
1			3				TOTAL SHEETS
2			4				266

DESIGN ENGINEER OF RECORD: S. T. CHAMPION DATE: 5-13
DRAWN BY: H. T. BARBOUR DATE: 3-07-12
CHECKED BY: D. A. GLADDEN DATE: 8-12

14-MAY-2013 08:47
K:\Structures\Plans\Bailey\STR5and6\TBARBOUR\Microstation\LEFT LANE\SUBSTRUCTURE\R-2707B_SD_B*.dgn
tbarbour

STR. #5

NOTES

STIRRUPS IN CAP MAY BE SHIFTED AS NECESSARY TO CLEAR ANCHOR BOLTS.

THE CONTRACTOR'S ATTENTION IS CALLED TO THE FACT THAT THE LONGITUDINAL REINFORCEMENT FOR THE DRILLED PIERS IS DETAILED WITH 3 FEET OF EXTRA LENGTH.

ALL STEEL IN THE DRILLED PIERS IS INCLUDED IN THE PAY ITEMS FOR "REINFORCING STEEL" AND "SPIRAL COLUMN REINFORCING STEEL."

HOOKS ON V1 BARS MAY BE TURNED AS NECESSARY FOR PLACING REINFORCING STEEL.

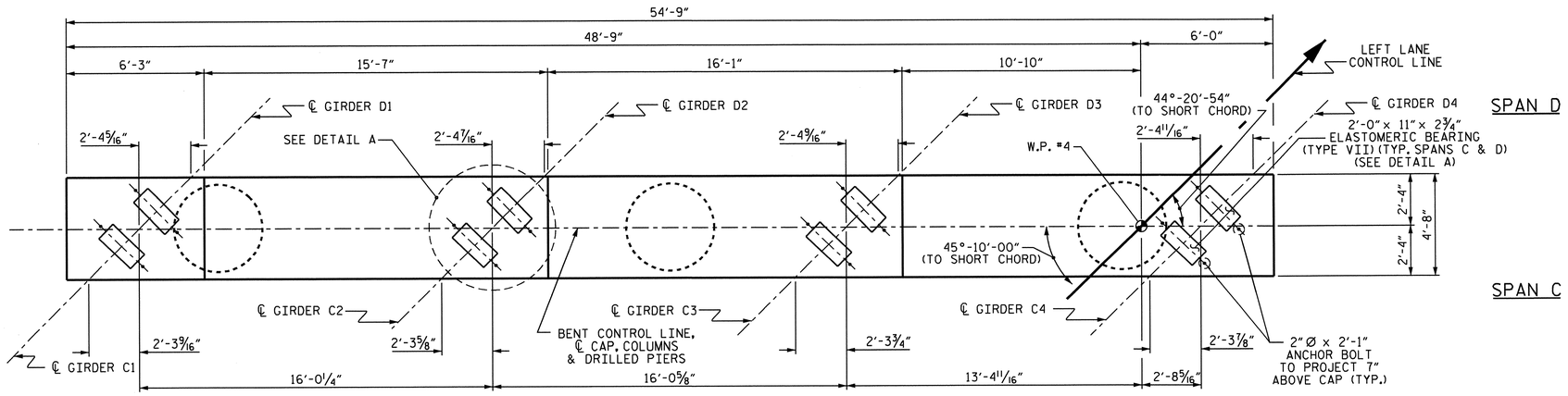

PLAN

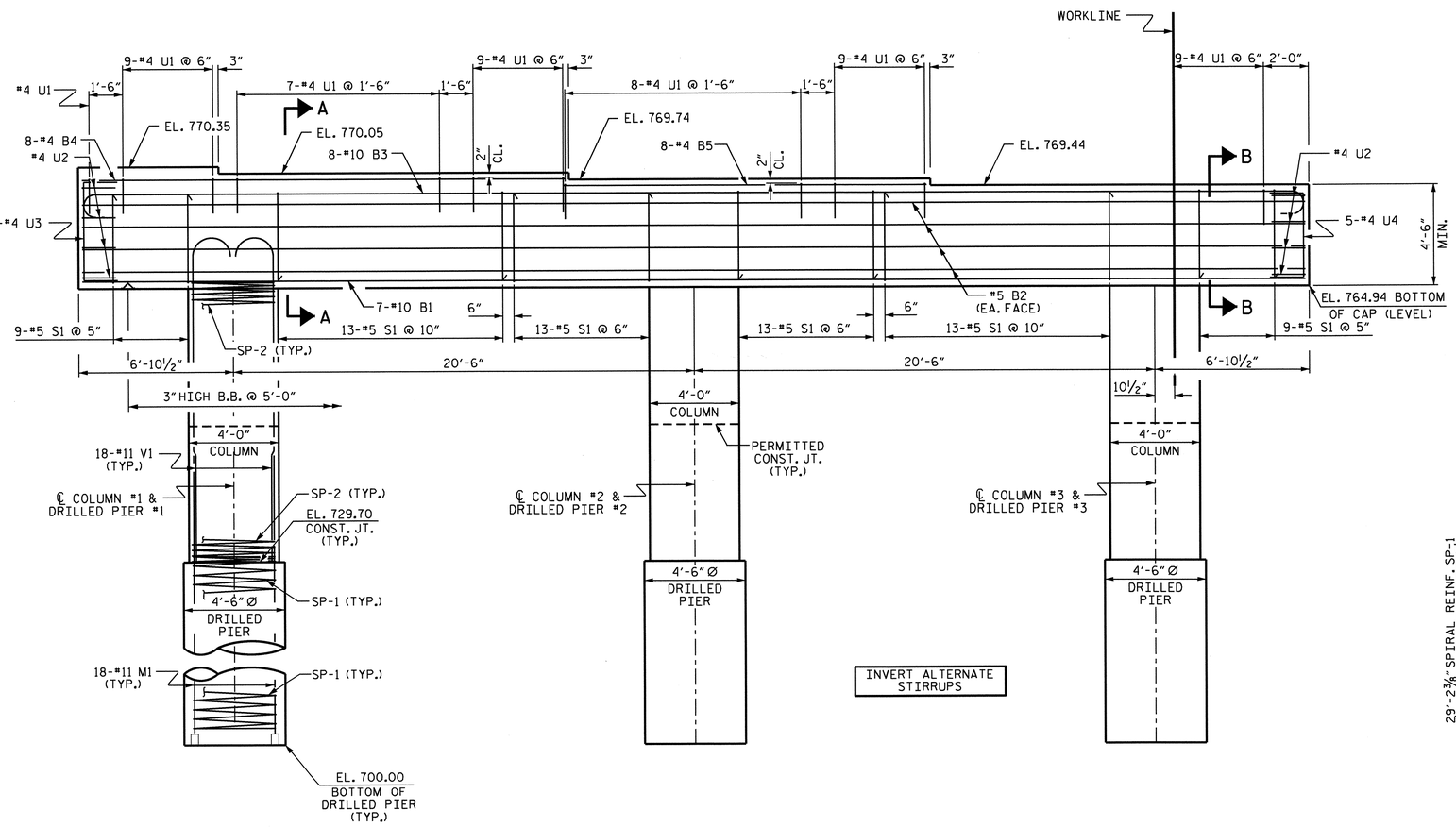

ELEVATION

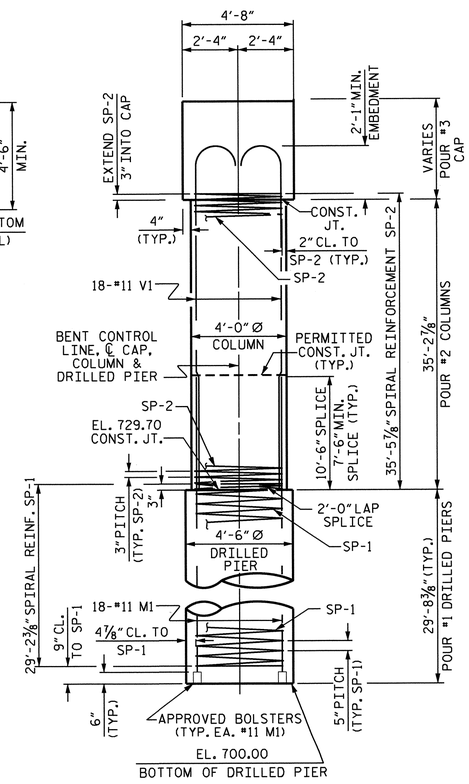

END ELEVATION

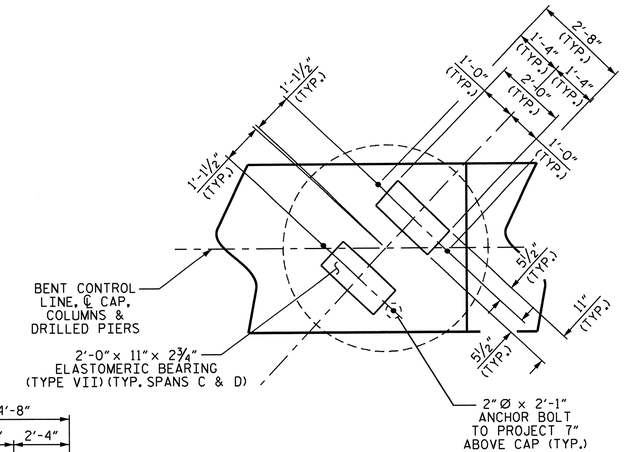

DETAIL A

(TYP. ALL BEARINGS)

NORTH CAROLINA PROFESSIONAL SEAL 15825 BRIDGE ENGINEER S. D. KLAPPENBACH 6-27-2013

PROJECT NO. R-2707B

CLEVELAND COUNTY

STATION: 340+70.00-L-

SHEET 1 OF 2

STATE OF NORTH CAROLINA
DEPARTMENT OF TRANSPORTATION
RALEIGH

SUBSTRUCTURE BENT #3 (LEFT LANE)

REVISIONS						SHEET NO.
NO.	BY:	DATE:	NO.	BY:	DATE:	S-167
1			3			TOTAL SHEETS
2			4			266

DESIGN ENGINEER OF RECORD: S. T. CHAMPION DATE: 5-13

DRAWN BY: H. T. BARBOUR DATE: 3-07-12

CHECKED BY: D. A. GLADDEN DATE: 8-12

25-JUN-2013 10:16
K:\Structures\Plans\Bailey\STR5and6\TBARBOUR\Microstation\LEFT LANE\SUBSTRUCTURE\R-2707B_SD_B*.dgn
tbarbour

STR. #5

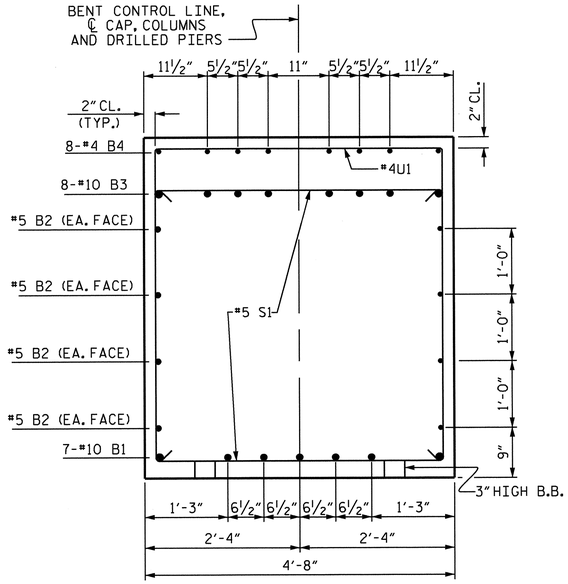

SECTION A-A

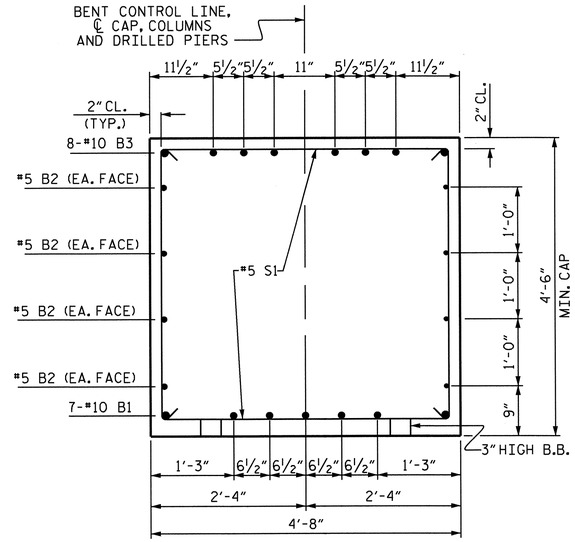

SECTION B-B

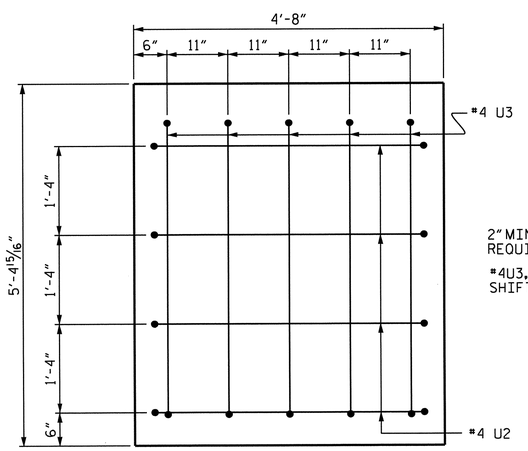

LEFT END VIEW

2" MIN. CONCRETE COVER FROM END OF CAP REQUIRED FOR ALL #4U3, #4U2 AND #4U4 BARS.

#4U3, #4U2 AND #4U4 BARS MAY BE SHIFTED UP TO 2" TO CLEAR "B" BARS.

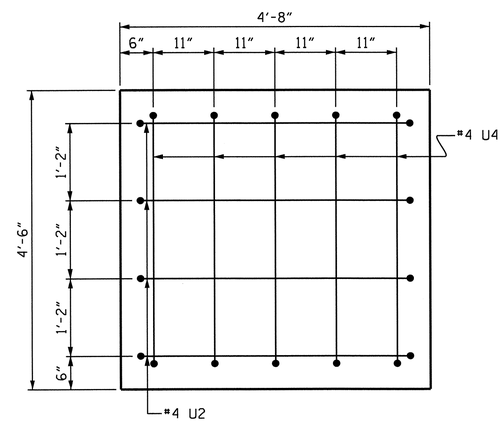

RIGHT END VIEW

BAR TYPES

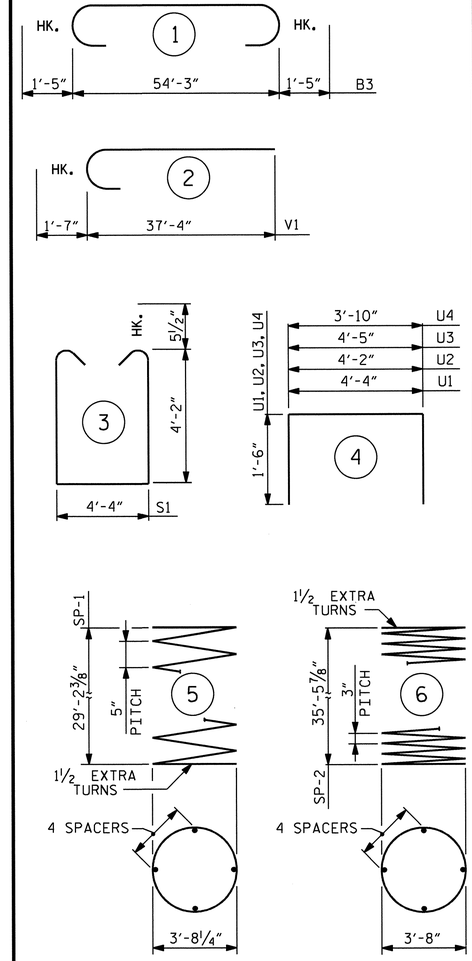

ALL BAR DIMENSIONS ARE OUT TO OUT.

BILL OF MATERIAL

BENT #3

BAR	NO.	SIZE	TYPE	LENGTH	WEIGHT
B1	7	#10	STR.	54'-5"	1639
B2	8	#5	STR.	54'-5"	454
B3	8	#10	1	57'-1"	1965
B4	8	#4	STR.	21'-6"	115
B5	8	#4	STR.	16'-2"	86
M1	54	#11	STR.	39'-9"	11404
S1	70	#5	3	13'-7"	992
U1	51	#4	4	7'-4"	250
U2	8	#4	4	7'-2"	38
U3	5	#4	4	7'-5"	25
U4	5	#4	4	6'-10"	23
V1	54	#11	2	38'-11"	11165
REINFORCING STEEL (LBS.)					28156
SP-1	3	*	5	818'-10"	2562
SP-2	3	**	6	1632'-4"	3271
SPIRAL REINFORCING STEEL (LBS.)					5833

CLASS A CONCRETE
POUR #2 (COLUMNS) 49.2 C.Y.
POUR #3 (CAP) 46.2 C.Y.

TOTAL 95.4 C.Y.

DRILLED PIERS

DRILLED PIER CONCRETE
POUR #1 (DRILLED PIERS) 52.5 C.Y.

4'-6" Ø DRILLED PIERS IN SOIL 56.10 LIN. FT.

4'-6" Ø DRILLED PIERS NOT IN SOIL 33.00 LIN. FT.

CSL TUBES 468.0 LIN. FT.

* THE SP-1 REINFORCING STEEL SHALL BE W31 OR D-31 COLD DRAWN WIRE OR #5 PLAIN OR DEFORMED BAR.

** THE SP-2 SPIRAL REINFORCING STEEL SHALL BE W20 OR D-20 COLD DRAWN WIRE OR #4 PLAIN OR DEFORMED BAR.

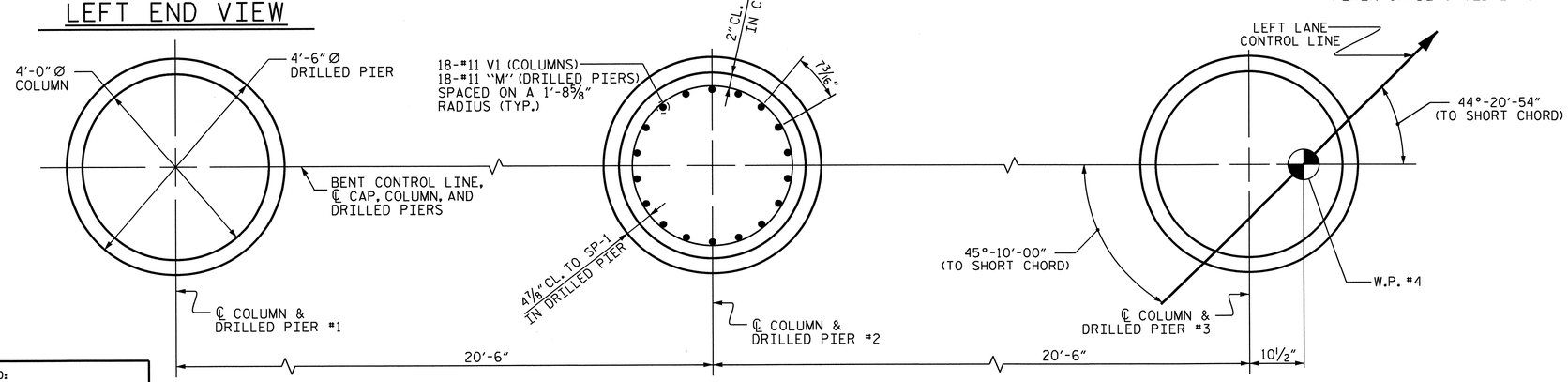

PLAN OF COLUMNS AND DRILLED PIERS

ALL COLUMNS AND DRILLED PIERS ARE SIMILAR

PROJECT NO. R-2707B
CLEVELAND COUNTY
STATION: 340+70.00-L-

SHEET 2 OF 2

STATE OF NORTH CAROLINA
DEPARTMENT OF TRANSPORTATION
RALEIGH

SUBSTRUCTURE
BENT #3
(LEFT LANE)

NORTH CAROLINA PROFESSIONAL SEAL 15825 ENGINEER BRUCE D. KLAPPENBACH
6-27-2013

REVISIONS							SHEET NO.
NO.	BY:	DATE:	NO.	BY:	DATE:		S-168
1			3				TOTAL SHEETS
2			4				266

STR. #5

DESIGN ENGINEER OF RECORD: S. T. CHAMPION DATE : 5-13
DRAWN BY : H. T. BARBOUR DATE : 3-07-12
CHECKED BY : D. A. GLADDEN DATE : 8-12

14-MAY-2013 08:47
K:\Structures\Plans\Bailey\STR5and6\TBARBOUR\Microstation\LEFT LANE\SUBSTRUCTURE\R-2707B_SD_B*.dgn
tbarbour

NOTES

STIRRUPS IN CAP MAY BE SHIFTED AS NECESSARY TO CLEAR ANCHOR BOLTS.

THE CONTRACTOR'S ATTENTION IS CALLED TO THE FACT THAT THE LONGITUDINAL REINFORCEMENT FOR THE DRILLED PIERS IS DETAILED WITH 3 FEET OF EXTRA LENGTH.

ALL STEEL IN THE DRILLED PIERS IS INCLUDED IN THE PAY ITEMS FOR "REINFORCING STEEL" AND "SPIRAL COLUMN REINFORCING STEEL."

HOOKS ON "V" BARS MAY BE TURNED AS NECESSARY FOR PLACING REINFORCING STEEL.

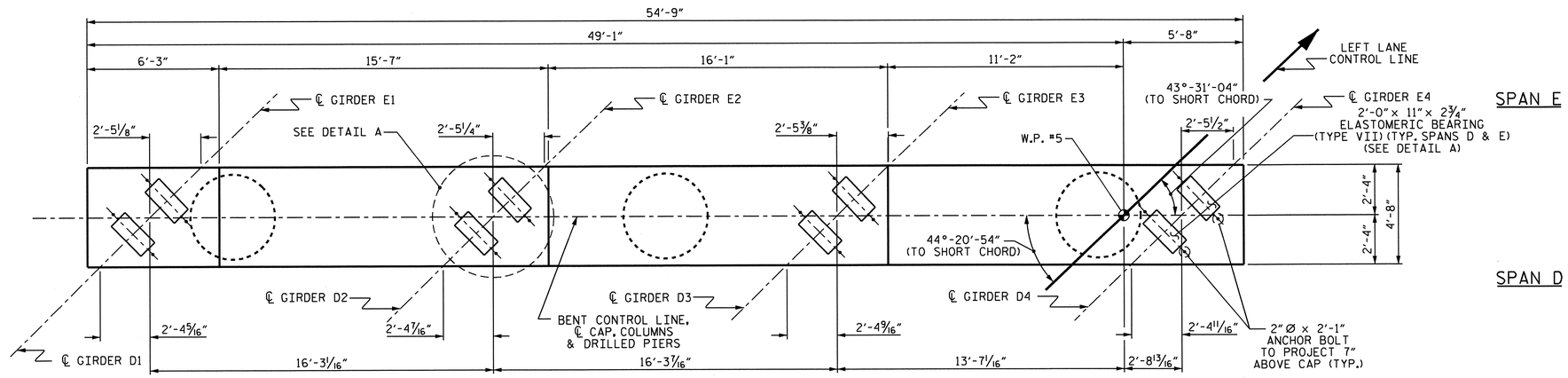

PLAN

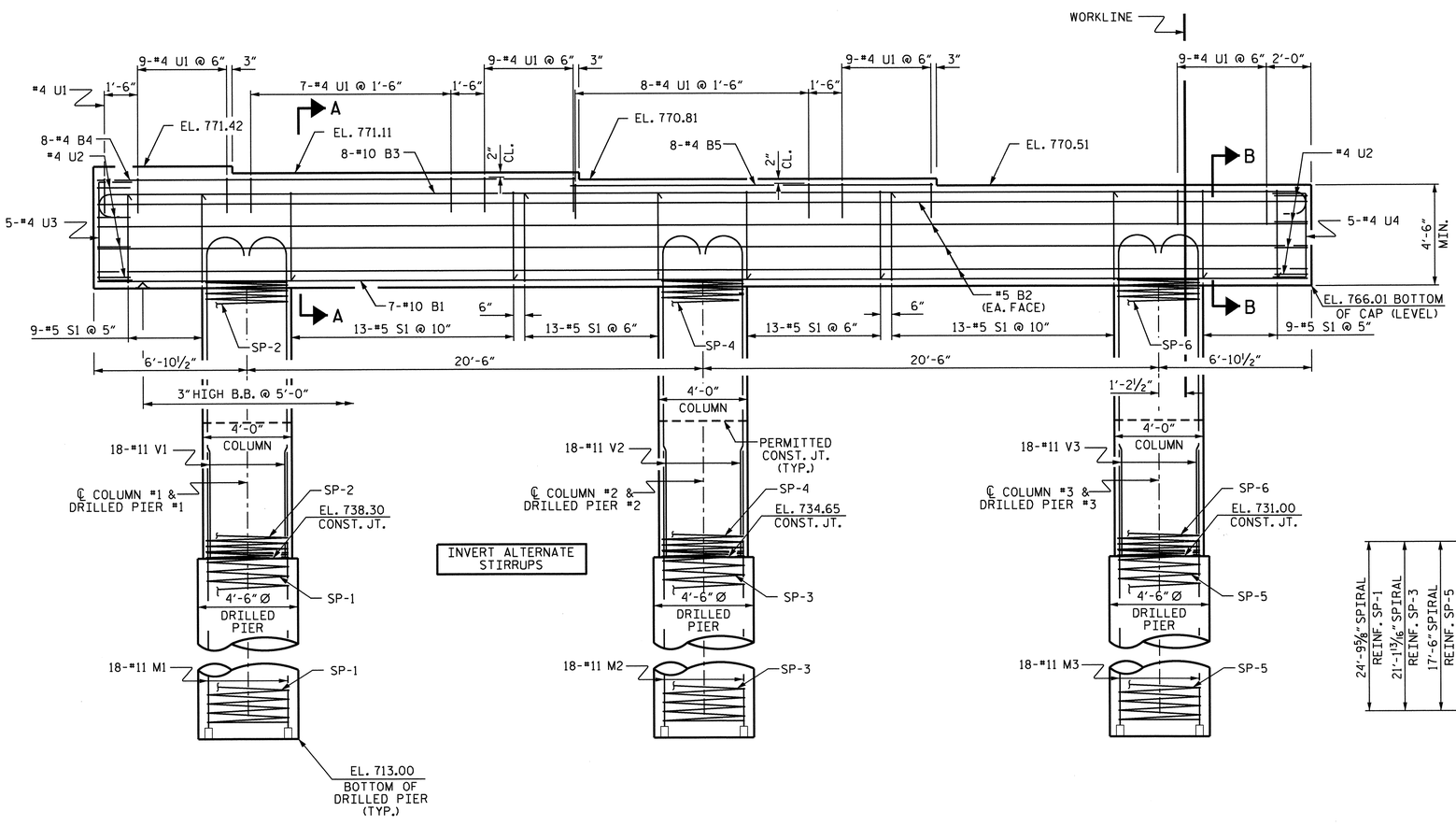

ELEVATION

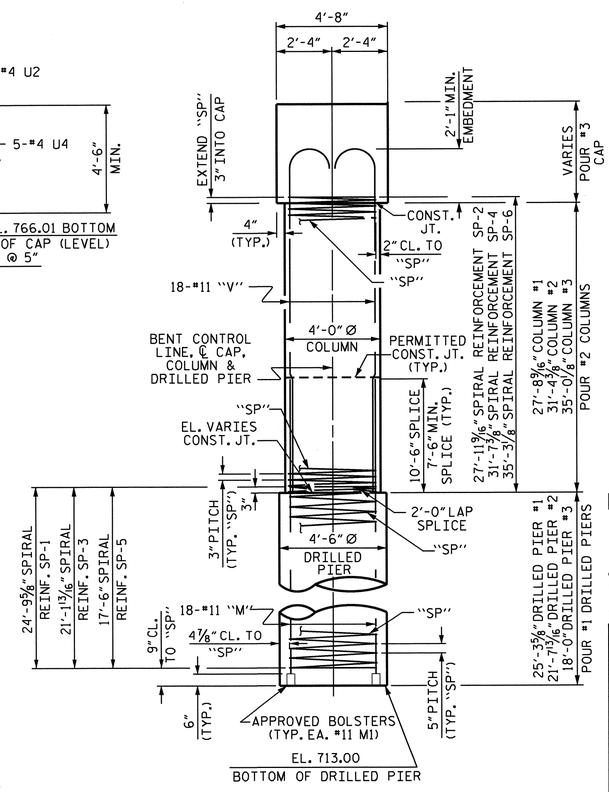

END ELEVATION

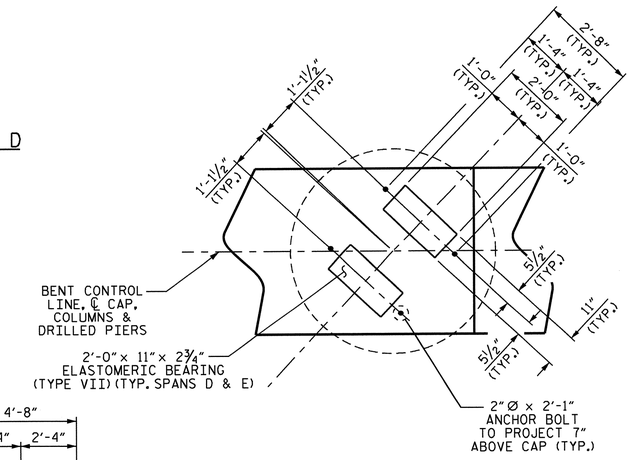

DETAIL A

(TYP. ALL BEARINGS)

PROJECT NO. R-2707B

CLEVELAND COUNTY

STATION: 340+70.00-L-

SHEET 1 OF 2

STATE OF NORTH CAROLINA
DEPARTMENT OF TRANSPORTATION
RALEIGH

SUBSTRUCTURE
BENT #4
(LEFT LANE)

REVISIONS						SHEET NO.
NO.	BY:	DATE:	NO.	BY:	DATE:	S-169
1			3			TOTAL SHEETS
2			4			266

STR. #5

DESIGN ENGINEER OF RECORD: S. T. CHAMPION DATE: 5-13
DRAWN BY: H. T. BARBOUR DATE: 3-07-12
CHECKED BY: D. A. GLADDEN DATE: 8-12

24-JUN-2013 11:55
K:\Structures\Plans\Bailey\STR5and6\TBARBOUR\Microstation\LEFT LANE\SUBSTRUCTURE\R-2707B_SD_B*.dgn
tbarbour

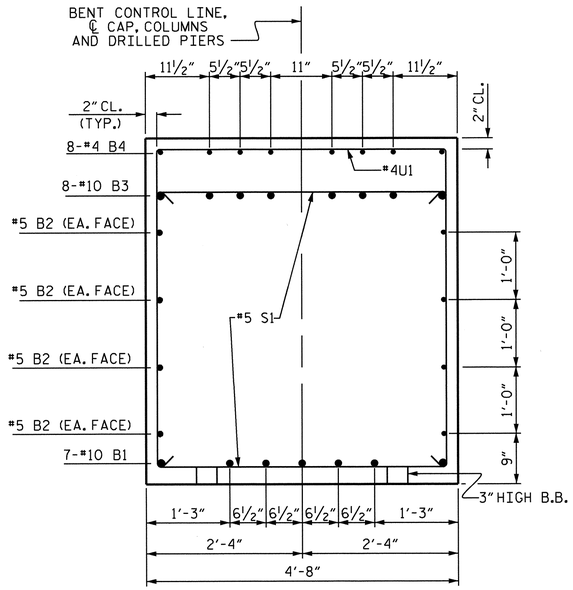

SECTION A-A

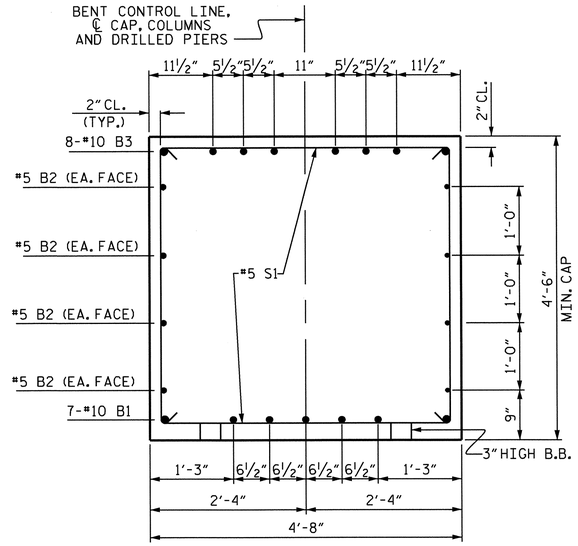

SECTION B-B

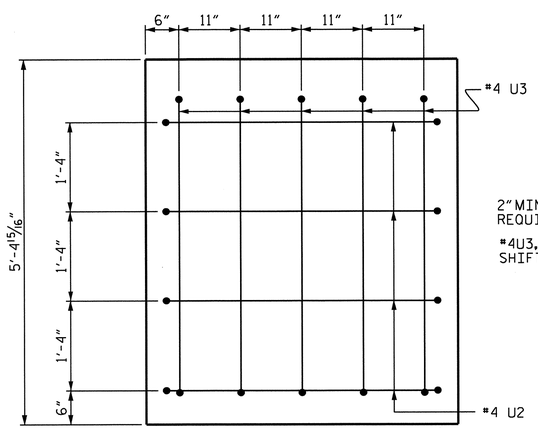

2" MIN. CONCRETE COVER FROM END OF CAP REQUIRED FOR ALL #4U3, #4U2 AND #4U4 BARS.

#4U3, #4U2 AND #4U4 BARS MAY BE SHIFTED UP TO 2" TO CLEAR "B" BARS.

LEFT END VIEW

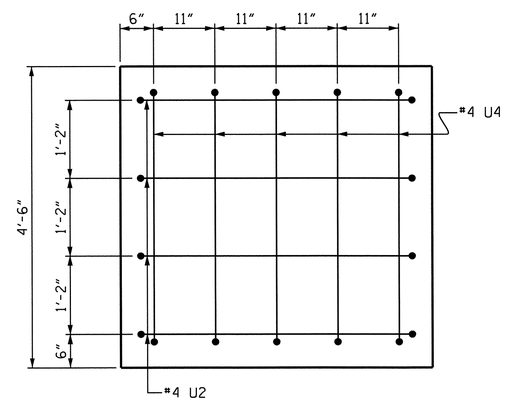

RIGHT END VIEW

BAR TYPES

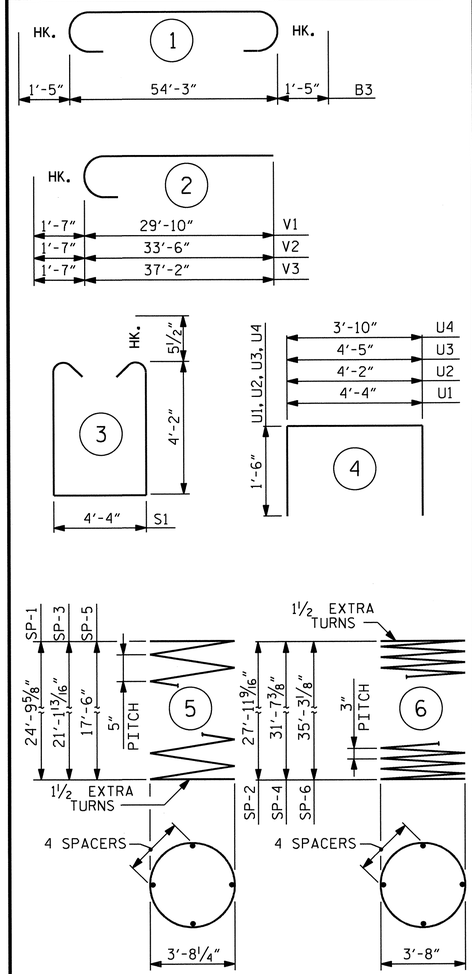

ALL BAR DIMENSIONS ARE OUT TO OUT.

✱ THE SP-1, SP-3 AND SP-5 REINFORCING STEEL SHALL BE W31 OR D-31 COLD DRAWN WIRE OR #5 PLAIN OR DEFORMED BAR.

✱✱ THE SP-2, SP-4 AND SP-6 SPIRAL REINFORCING STEEL SHALL BE W20 OR D-20 COLD DRAWN WIRE OR #4 PLAIN OR DEFORMED BAR.

BILL OF MATERIAL

BENT #4

BAR	NO.	SIZE	TYPE	LENGTH	WEIGHT
B1	7	#10	STR.	54'-5"	1639
B2	8	#5	STR.	54'-5"	454
B3	8	#10	1	57'-1"	1965
B4	8	#4	STR.	21'-6"	115
B5	8	#4	STR.	16'-2"	86
M1	18	#11	STR.	35'-4"	3379
M2	18	#11	STR.	31'-8"	3028
M3	18	#11	STR.	28'-0"	2678
S1	70	#5	3	13'-7"	992
U1	51	#4	4	7'-4"	250
U2	8	#4	4	7'-2"	38
U3	5	#4	4	7'-5"	25
U4	5	#4	4	6'-10"	23
V1	18	#11	2	31'-5"	3004
V2	18	#11	2	35'-1"	3355
V3	18	#11	2	38'-9"	3706
REINFORCING STEEL (LBS.)					24737
SP-1	1	✱	5	699'-0"	729
SP-2	1	✱✱	6	1291'-1"	862
SP-3	1	✱	5	599'-2"	625
SP-4	1	✱✱	6	1456'-0"	973
SP-5	1	✱	5	496'-6"	518
SP-6	1	✱✱	6	1623'-9"	1085
SPIRAL REINFORCING STEEL (LBS.)					4792

CLASS A CONCRETE
POUR #2 (COLUMNS) 43.8 C.Y.
POUR #3 (CAP) 46.2 C.Y.
TOTAL 90.0 C.Y.

DRILLED PIERS

DRILLED PIER CONCRETE
POUR #1 (DRILLED PIERS) 38.3 C.Y.

4'-6" Ø DRILLED PIERS IN SOIL 55.95 LIN. FT.

4'-6" Ø DRILLED PIERS NOT IN SOIL 9.00 LIN. FT.

CSL TUBES 347.3 LIN. FT.

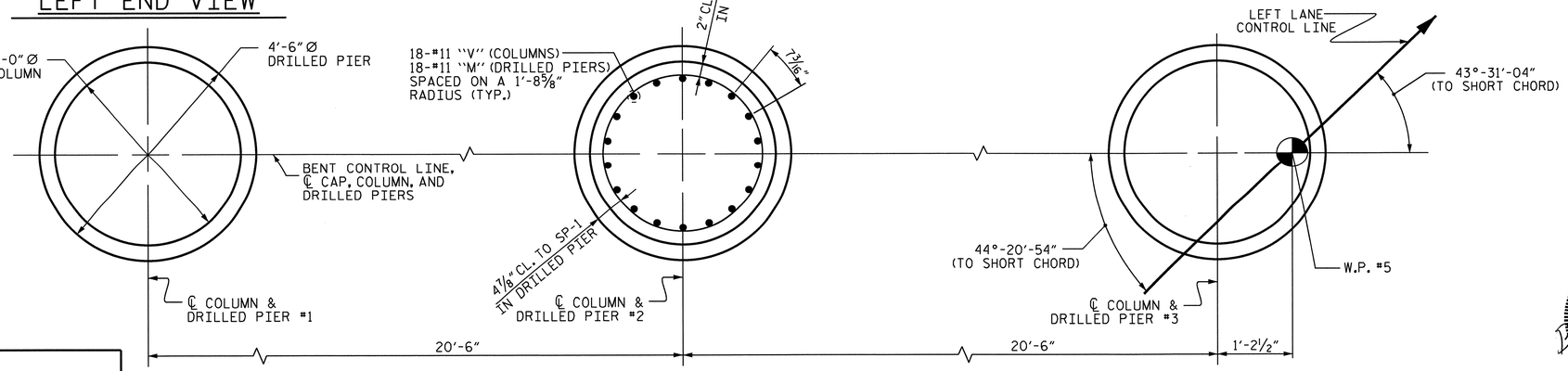

PLAN OF COLUMNS AND DRILLED PIERS

ALL COLUMNS AND DRILLED PIERS ARE SIMILAR

PROJECT NO. R-2707B
CLEVELAND COUNTY
STATION: 340+70.00-L-

SHEET 2 OF 2

STATE OF NORTH CAROLINA
DEPARTMENT OF TRANSPORTATION
RALEIGH

SUBSTRUCTURE
BENT #4
(LEFT LANE)

NORTH CAROLINA PROFESSIONAL SEAL 15825 ENGINEER D. KLAPPENBACH 6-27-2013

REVISIONS						SHEET NO.
NO.	BY:	DATE:	NO.	BY:	DATE:	S-170
1			3			TOTAL SHEETS
2			4			266

DESIGN ENGINEER OF RECORD: S. T. CHAMPION DATE: 5-13
DRAWN BY: H. T. BARBOUR DATE: 3-07-12
CHECKED BY: D. A. GLADDEN DATE: 8-12

24-JUN-2013 11:55
K:\Structures\Plans\Bailey\STR5and6\TBARBOUR\Microstation\LEFT LANE\SUBSTRUCTURE\R-2707B_SD_B*.dgn
tbarbour

STR. #5

NOTES

STIRRUPS IN CAP MAY BE SHIFTED AS NECESSARY TO CLEAR ANCHOR BOLTS.

FOR PILE SPLICE DETAILS, SEE END BENT SHEET 3 OF 3.

BACKWALL SHALL BE PLACED BEFORE APPLYING THE EPOXY PROTECTIVE COATING.

THE TOP SURFACE AREAS OF THE END BENT CAPS SHALL BE CURED IN ACCORDANCE WITH THE STANDARD SPECIFICATIONS EXCEPT THE MEMBRANE CURING COMPOUND METHOD SHALL NOT BE USED.

THE TOP SURFACE OF THE CAP EXCEPT THE BRIDGE SEAT BUILDUPS SHALL BE SLOPED TRANSVERSELY FROM THE FILL FACE TO THE BACK FACE AT THE RATE OF 2%.

THE CONCRETE IN THE SHADED AREA OF THE WING SHALL BE POURED AFTER THEBARRIER RAILS ARE CAST IF SLIP FORMING IS USED.

INSTALL THE 4"DIA. DRAIN PIPE THROUGH THE WING WALL AS REQUIRED FOR REINFORCED BRIDGE APPROACH FILLS. SEE THE ROADWAY PLANS. REINFORCING STEEL IN THE WING WALL MAY BE SHIFTED AS NECESSARY TO CLEAR THE DRAIN PIPE.

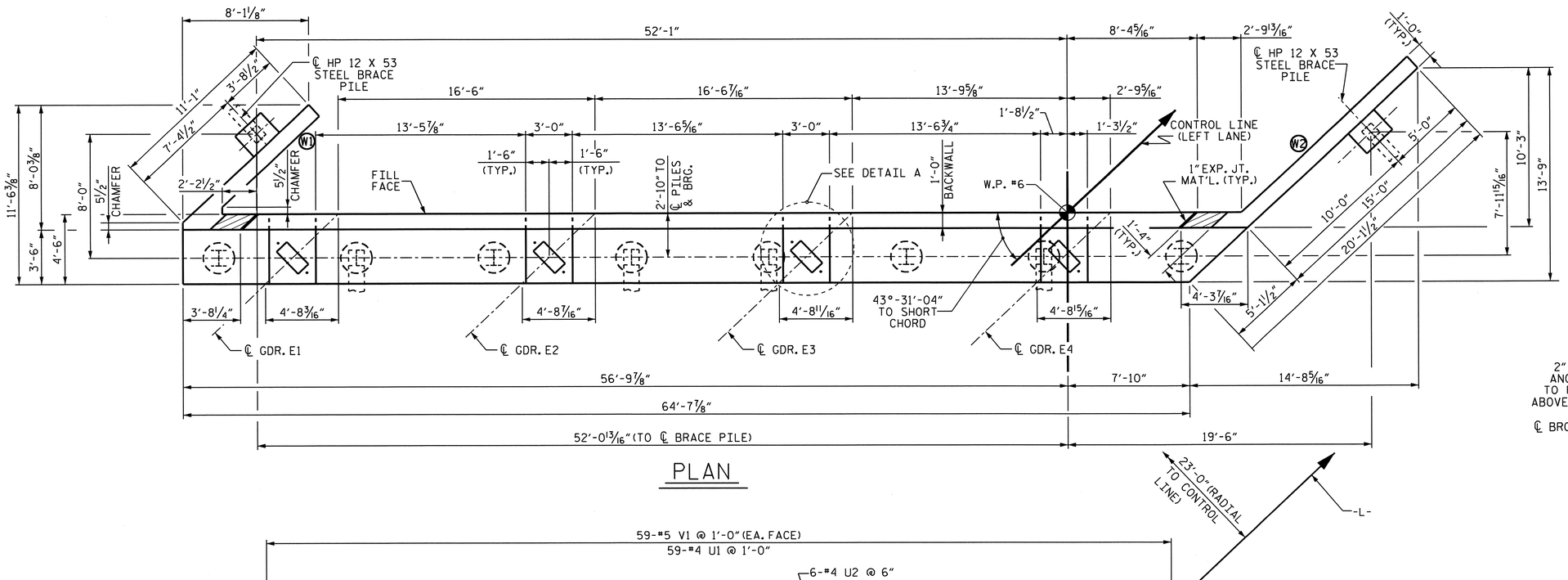

PLAN

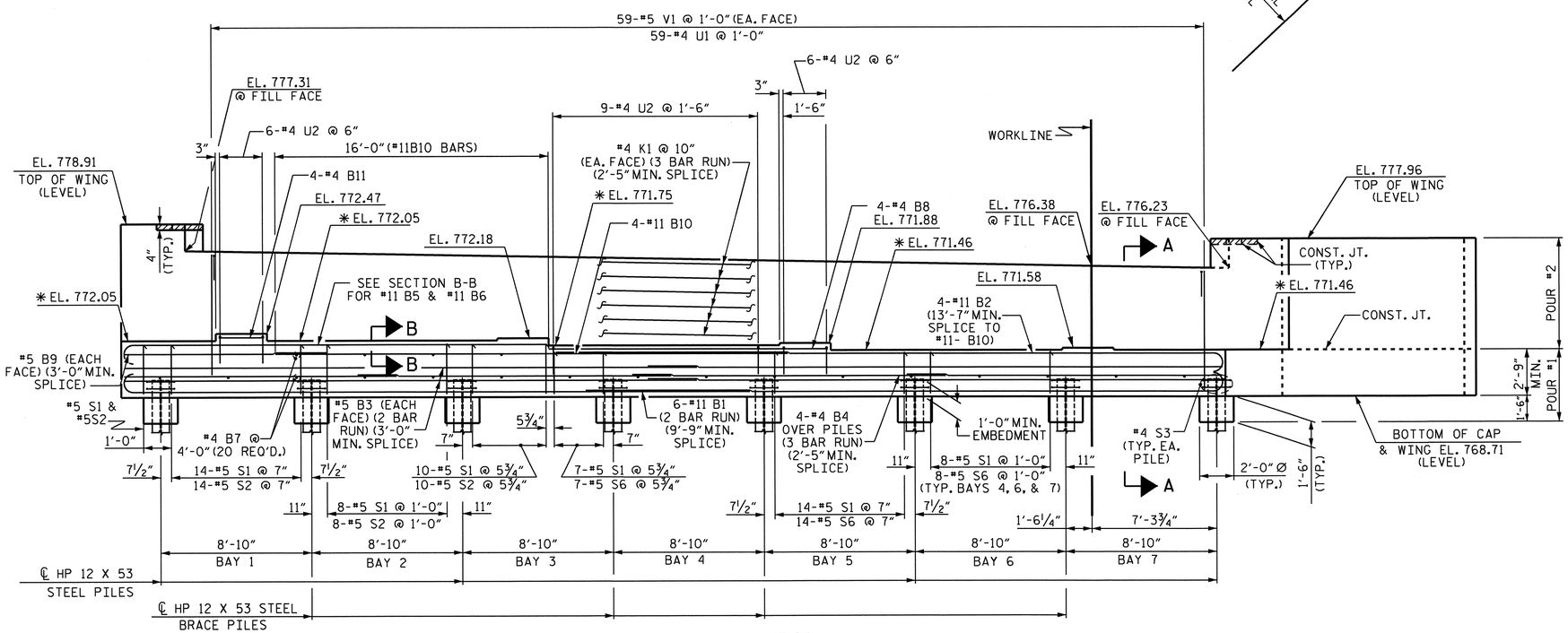

ELEVATION

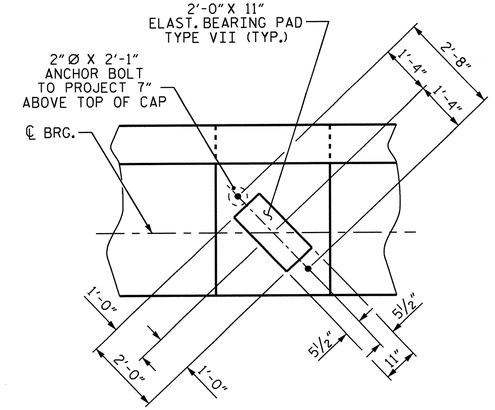

DETAIL A

(DIMENSIONS TYP. EA. BRG.)
(PILE NOT SHOWN FOR CLARITY)

PROJECT NO. R-2707B
CLEVELAND COUNTY
STATION: 340+70.00 -L-

SHEET 1 OF 3

STATE OF NORTH CAROLINA
DEPARTMENT OF TRANSPORTATION
RALEIGH

SUBSTRUCTURE END BENT #2 (LEFT LANE)

NORTH CAROLINA PROFESSIONAL SEAL 15825 ENGINEER D. K. APPENBROOK
6-27-2013

REVISIONS						
NO.	BY:	DATE:	NO.	BY:	DATE:	
1			3			
2			4			

SHEET NO. S-171
TOTAL SHEETS 266

STR. #5

DESIGN ENGINEER OF RECORD: B. A. DUKE DATE: 6-13
DRAWN BY: H. T. BARBOUR DATE: 4-20-12
CHECKED BY: D. A. GLADDEN DATE: 1-20-13

25-JUN-2013 10:14
K:\Structures\Plans\Bailey\STR5and6\TBARBOUR\Microstation\LEFT LANE\SUBSTRUCTURE\R-2707B_SD_E*.dgn
tbarbour

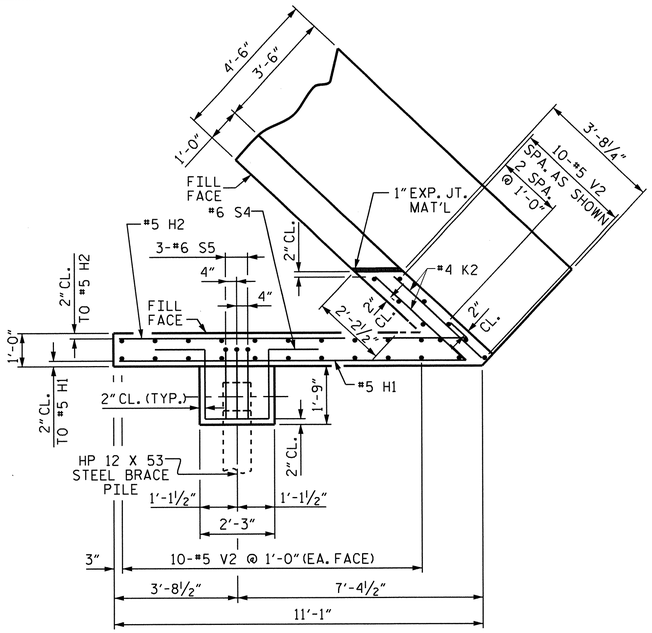

PLAN OF LEFT WING (W1)

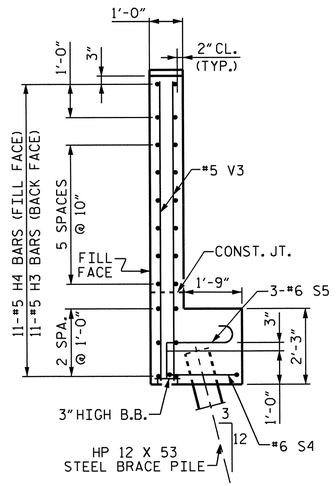

SECTION X-X

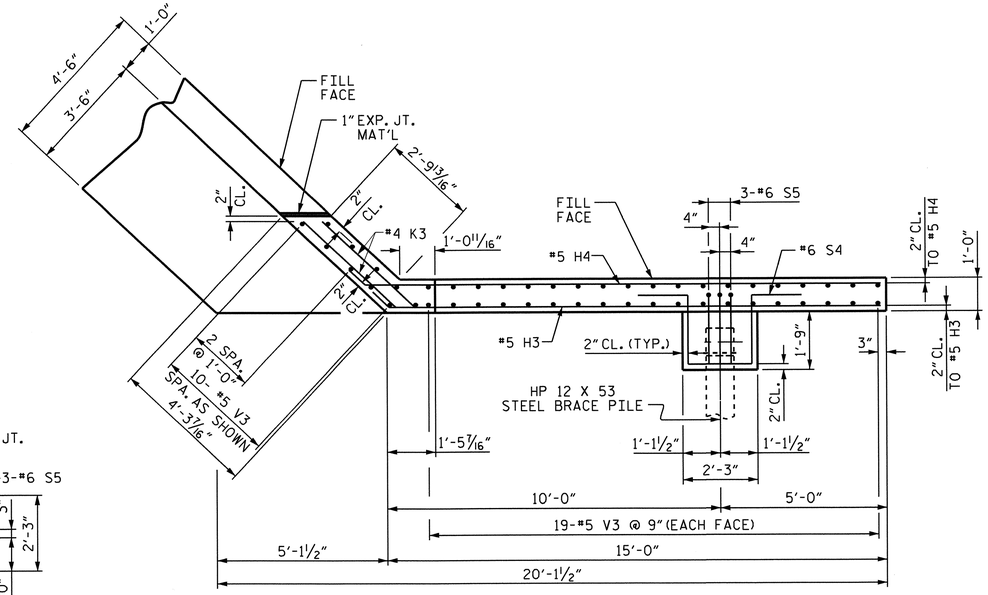

PLAN OF RIGHT WING (W2)

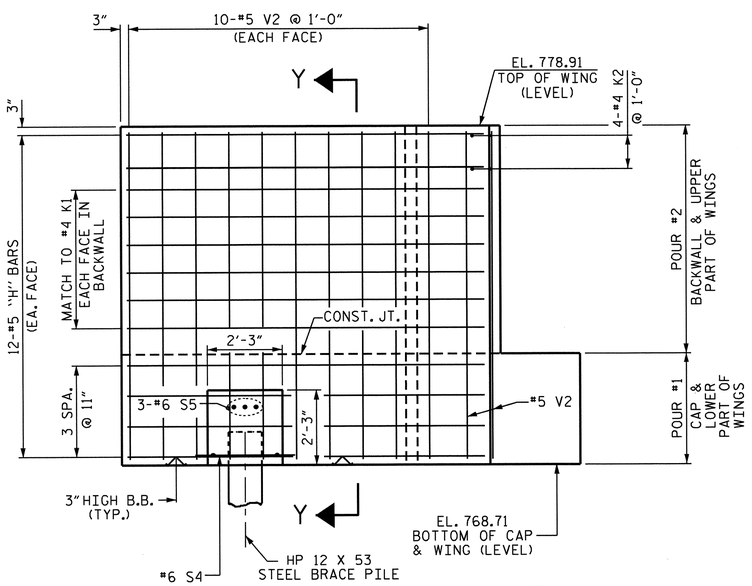

ELEVATION OF LEFT WING (W1)

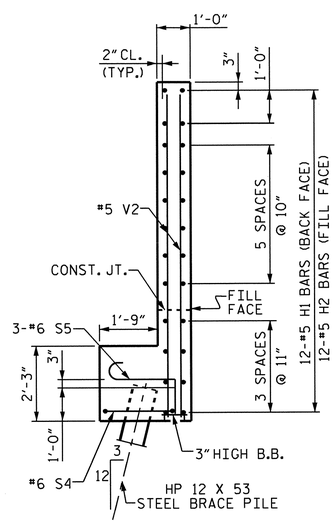

SECTION Y-Y

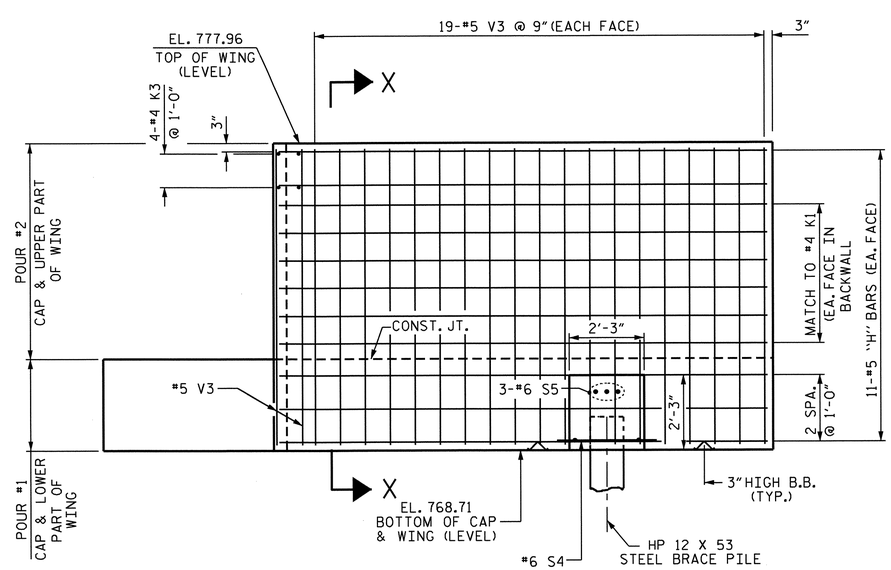

ELEVATION OF RIGHT WING (W2)

PROJECT NO. R-2707B

CLEVELAND COUNTY

STATION: 340+00.00 -L-

SHEET 2 OF 3

STATE OF NORTH CAROLINA
DEPARTMENT OF TRANSPORTATION
RALEIGH

SUBSTRUCTURE END BENT #2 (LEFT LANE)

NORTH CAROLINA PROFESSIONAL SEAL 15825 ENGINEER BRIAN D. KLAPPERICH
6-27-2013

REVISIONS						SHEET NO.
NO.	BY:	DATE:	NO.	BY:	DATE:	S-172
1			3			TOTAL SHEETS
2			4			266

DESIGN ENGINEER OF RECORD: B. A. DUKE DATE: 6-13

DRAWN BY: H. T. BARBOUR DATE: 4-24-12

CHECKED BY: D. A. GLADDEN DATE: 1-20-13

24-JUN-2013 11:32
K:\Structures\Plans\Bailey\STR5and6\TBARBOUR\Microstation\LEFT LANE\SUBSTRUCTURE\R-2707B_SD_E*.dgn
tbarbour

STR. #5

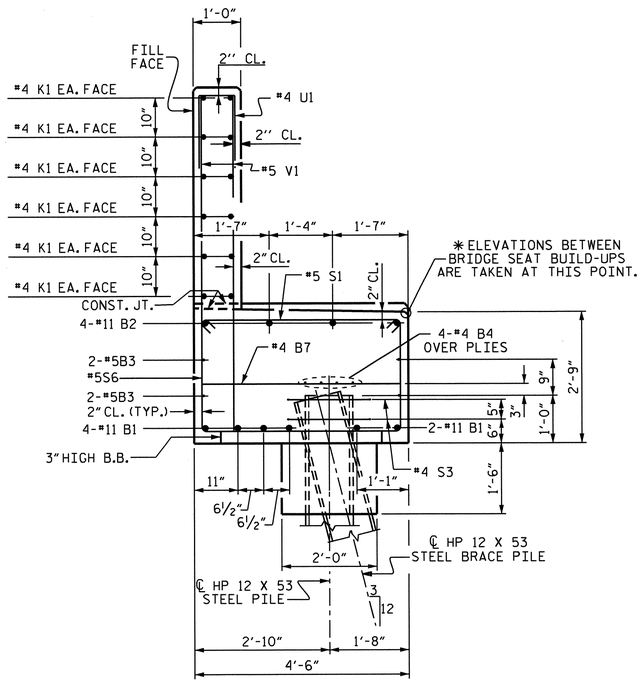

SECTION A-A

(SEE SHEET 1 OF 3)

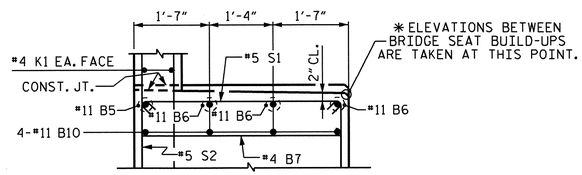

SECTION B-B

(SEE SHEET 1 OF 3)

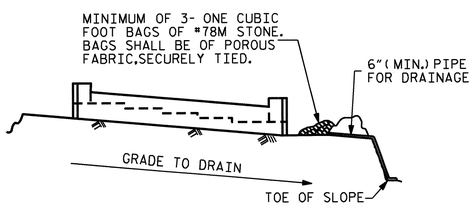

BAGGED STONE AND PIPE SHALL BE PLACED IMMEDIATELY AFTER COMPLETION OF END BENT EXCAVATION. PIPE MAY BE EITHER CONCRETE, CORRUGATED STEEL, CORRUGATED ALUMINUM ALLOY, OR CORRUGATED PLASTIC. PERFORATED PIPE WILL NOT BE ALLOWED.

BAGGED STONE SHALL REMAIN IN PLACE UNTIL THE ENGINEER DIRECTS THAT IT BE REMOVED. THE CONTRACTOR SHALL REMOVE AND DISPOSE OF SILT ACCUMULATIONS AT BAGGED STONE WHEN SO DIRECTED BY THE ENGINEER. BAGS SHALL BE REMOVED AND REPLACED WHENEVER THE ENGINEER DETERMINES THAT THEY HAVE DETERIORATED AND LOST THEIR EFFECTIVENESS.

NO SEPARATE PAYMENT WILL BE MADE FOR THIS WORK AND THE ENTIRE COST OF THIS WORK SHALL BE INCLUDED IN THE UNIT CONTRACT PRICE BID FOR THE SEVERAL PAY ITEMS.

TEMPORARY DRAINAGE AT END BENT

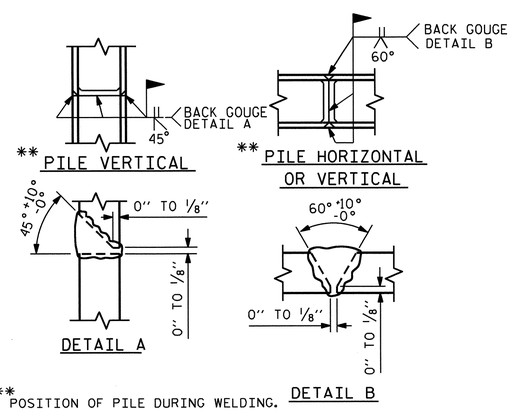

** POSITION OF PILE DURING WELDING.

PILE SPLICE DETAILS

BAR TYPES

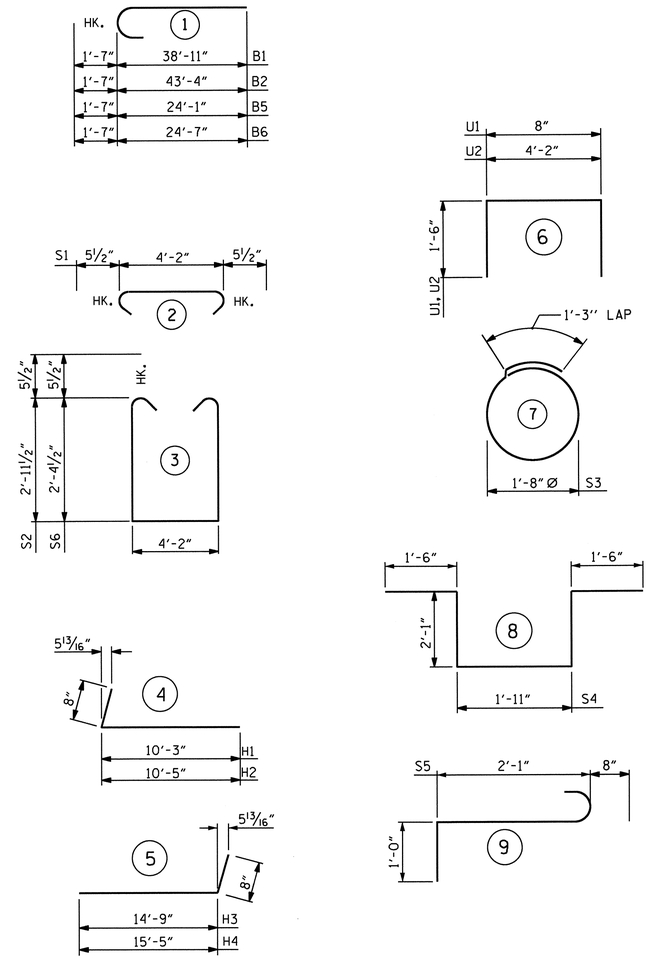

ALL BAR DIMENSIONS ARE OUT TO OUT.

BILL OF MATERIAL

END BENT #2

BAR	NO.	SIZE	TYPE	LENGTH	WEIGHT
B1	12	11	1	40'-6"	2582
B2	4	11	1	44'-11"	955
B3	8	5	STR	35'-8"	298
B4	12	4	STR	23'-10"	191
B5	1	11	1	25'-8"	136
B6	3	11	1	26'-2"	417
B7	20	4	STR	4'-2"	56
B8	4	4	STR	16'-5"	44
B9	2	5	STR	11'-10"	25
B10	4	11	STR	30'-2"	641
B11	4	4	STR	2'-8"	7
H1	12	5	4	10'-11"	137
H2	12	5	4	11'-1"	139
H3	11	5	5	15'-5"	177
H4	11	5	5	16'-1"	185
K1	36	4	STR	24'-5"	587
K2	4	4	STR	3'-7"	10
K3	4	4	STR	3'-10"	10
S1	78	5	2	5'-1"	414
S2	33	5	3	11'-0"	379
S3	16	4	7	6'-6"	69
S4	2	6	8	9'-1"	27
S5	6	6	9	3'-9"	34
S6	45	5	3	9'-10"	461
U1	59	4	6	3'-8"	145
U2	21	4	6	7'-2"	101
V1	118	5	STR	7'-2"	882
V2	30	5	STR	9'-10"	308
V3	48	5	STR	8'-11"	446
REINFORCING STEEL				LBS	9863

CLASS A CONCRETE BREAKDOWN

POUR #1

CAP, LOWER PART OF WINGS, CONCRETE COLLARS & PILE CAPS — 39.1 CU. YDS.

POUR #2

BACKWALL & UPPER PART OF WINGS — 15.4 CU. YDS.

CLASS A CONCRETE TOTAL — 54.5 CU. YDS.

HP 12 x 53 STEEL PILES

NO. 10 LIN. FT. 300

PROJECT NO. R-2707B

CLEVELAND COUNTY

STATION: 340+70.00 -L-

SHEET 3 OF 3

STATE OF NORTH CAROLINA
DEPARTMENT OF TRANSPORTATION
RALEIGH

SUBSTRUCTURE
END BENT #2
(LEFT LANE)

NORTH CAROLINA PROFESSIONAL SEAL 15825 BRUCE A. HOWES D. KLAPPENBACH
6-27-2013

DESIGN ENGINEER OF RECORD: B. A. DUKE DATE: 6-13

DRAWN BY: H. T. BARBOUR DATE: 4-18-12

CHECKED BY: D. A. GLADDEN DATE: 1-20-13

REVISIONS						SHEET NO.
NO.	BY:	DATE:	NO.	BY:	DATE:	S-173
1			3			TOTAL SHEETS
2			4			266

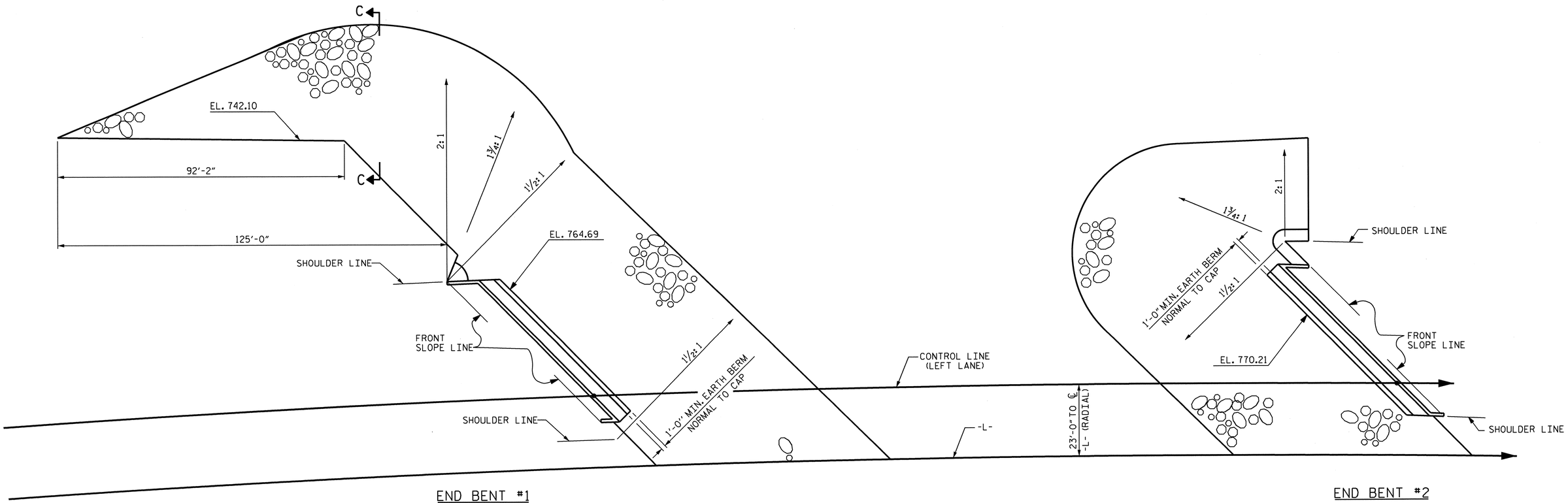

END BENT #1

END BENT #2

PLAN

ESTIMATED QUANTITIES		
BRIDGE @ STA. 340+70.00-L-	RIP RAP CLASS II (2'-0" THICK)	GEOTEXTILE FOR DRAINAGE
	TONS	SQUARE YARDS
END BENT 1	1295	1438
END BENT 2	810	900
TOTAL	2105	2338

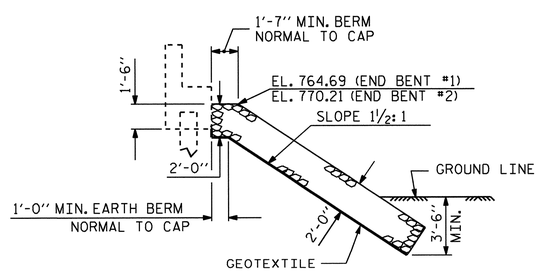

℄ SECTION

BERM RIP RAPPED

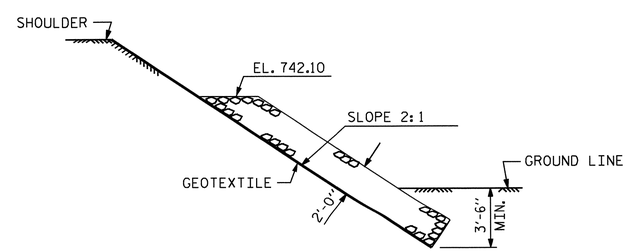

SECTION C-C

PROJECT NO. R-2707B

CLEVELAND COUNTY

STATION: 340+70.00-L-

STATE OF NORTH CAROLINA
DEPARTMENT OF TRANSPORTATION
RALEIGH

RIP RAP
(LEFT LANE)

NORTH CAROLINA PROFESSIONAL SEAL 15825 ENGINEER D. KLAPPENBACH
6-27-2013

REVISIONS							SHEET NO. S-174
NO.	BY:	DATE:	NO.	BY:	DATE:		
1			3				TOTAL SHEETS 266
2			4				

DRAWN BY : H. T. BARBOUR DATE : 3-13-12
CHECKED BY : D. A. GLADDEN DATE : 8-12

24-JUN-2013 12:01
k:\Structures\Plans\Bailey\STR5and6\TBARBOUR\Microstation\LEFT LANE\misc\R-2707B_SD_RR.dgn
tbarbour

STR. #5

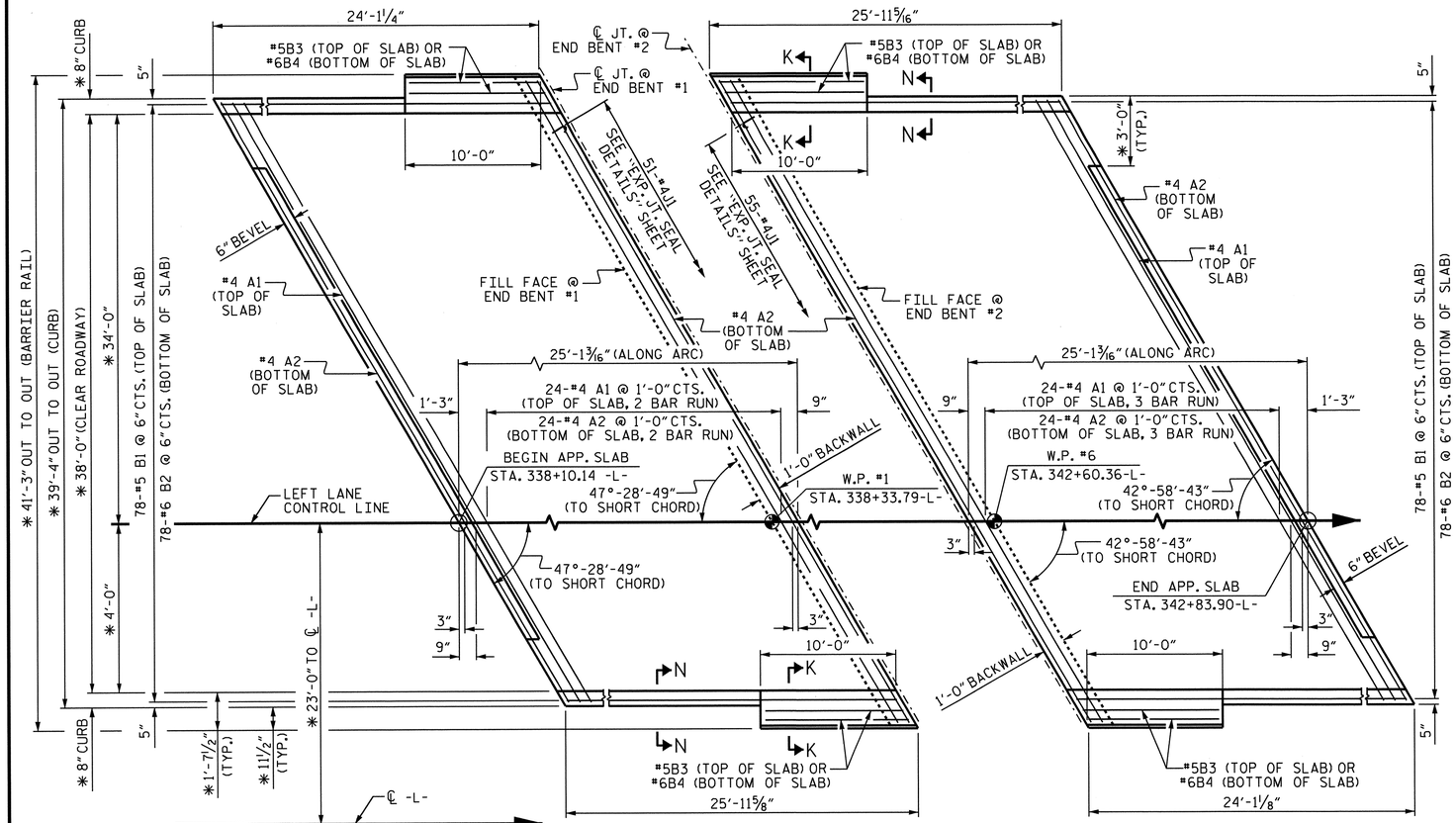

PLAN @ END BENT #1

PLAN @ END BENT #2

DIMENSIONS SHOWN ARE TYPICAL FOR BOTH APPROACH SLABS UNLESS OTHERWISE NOTED.

* DIMENSIONS ARE TO CIRCLES CONCENTRIC WITH ℄ -L-.

ARC OFFSETS ARE NEGLIGIBLE, THEREFORE NOT SHOWN.

NOTES

APPROACH SLAB SHALL NOT BE CONSTRUCTED PRIOR TO COMPLETION OF THE BRIDGE DECK.

FOR REINFORCED BRIDGE APPROACH FILL INCLUDING GEOTEXTILE, IMPERMEABLE GEOMEMBRANE, 4" Ø DRAINAGE PIPE, #78M STONE, AND SELECT MATERIAL, SEE ROADWAY PLANS.

AREA BETWEEN THE WINGWALL AND APPROACH SLAB SHALL BE GRADED TO DRAIN THE WATER AWAY FROM THE FILL FACE OF THE BRIDGE AND SHALL BE PAVED. SEE ROADWAY PLANS.

FOR EXPANSION JOINT SEALS, SEE SPECIAL PROVISIONS.

BILL OF MATERIAL

APPROACH SLAB AT EB #1

BAR	NO.	SIZE	TYPE	LENGTH	WEIGHT
* A1	50	#4	STR	28'-10"	963
A2	52	#4	STR	28'-8"	996
* B1	78	#5	STR	23'-11"	1946
B2	78	#6	STR	24'-5"	2861
* B3	4	#5	STR	9'-10"	41
B4	4	#6	STR	9'-10"	59
* J1	51	#4	1	1'-5"	48
REINFORCING STEEL **				LBS.	3916
* EPOXY COATED REINFORCING STEEL **				LBS.	2998
CLASS AA CONCRETE **				C.Y.	44.4

APPROACH SLAB AT EB #2

BAR	NO.	SIZE	TYPE	LENGTH	WEIGHT
* A1	75	#4	STR	21'-5"	1073
A2	78	#4	STR	21'-3"	1107
* B1	78	#5	STR	23'-10"	1939
B2	78	#6	STR	24'-5"	2861
* B3	4	#5	STR	9'-10"	41
B4	4	#6	STR	9'-10"	59
* J1	55	#4	1	1'-5"	52
REINFORCING STEEL **				LBS.	4027
* EPOXY COATED REINFORCING STEEL **				LBS.	3105
CLASS AA CONCRETE **				C.Y.	44.4

BAR TYPE

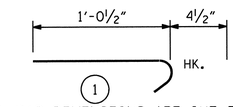

ALL BAR DIMENSIONS ARE OUT TO OUT

** QUANTITIES FOR BARRIER RAIL ARE NOT INCLUDED. SEE SHEET 2 OF 2.

THE QUANTITY OF #4 J1 BARS ON THE BILL OF MATERIAL IS BASED ON 1'-0" CENTERS. J1 BARS SHALL BE PLACED AT EACH VERTICAL STUD ANCHOR BOLT. IN THE EVENT THAT THE NUMBER OF VERTICAL STUD ANCHORS EXCEEDS THE NUMBER OF J1 BARS SPECIFIED, ADDITIONAL J1 BARS WILL NOT BE REQUIRED.

SPLICE LENGTHS

BAR SIZE	EPOXY COATED	UNCOATED
#4	2'-0"	1'-9"
#5	2'-6"	2'-2"
#6	3'-10"	2'-7"

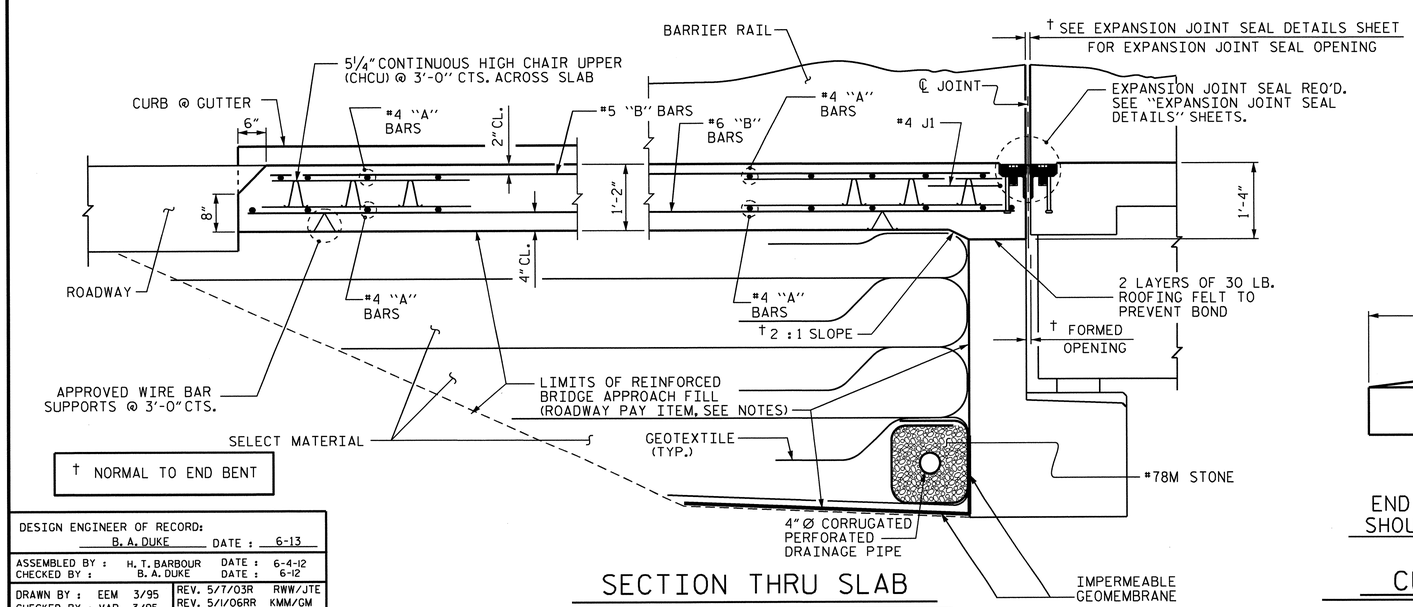

† NORMAL TO END BENT

SECTION THRU SLAB

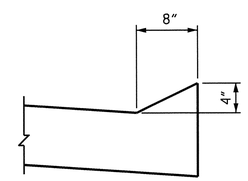

SECTION N-N

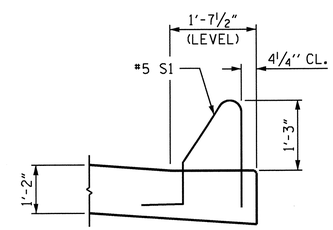

SECTION K-K

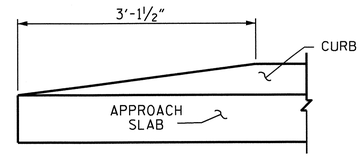

END OF CURB WITHOUT SHOULDER BERM GUTTER

CURB DETAILS

PROJECT NO. R-2707B

CLEVELAND COUNTY

STATION: 340+70.00-L-

SHEET 1 OF 2

STATE OF NORTH CAROLINA
DEPARTMENT OF TRANSPORTATION
RALEIGH

BRIDGE APPROACH SLAB FOR FLEXIBLE PAVEMENT (LEFT LANE)

NORTH CAROLINA PROFESSIONAL SEAL 15825 ENGINEER BRIAN E. D. KLAPPENBACH
6-27-2013

REVISIONS						SHEET NO. S-175
NO.	BY:	DATE:	NO.	BY:	DATE:	TOTAL SHEETS 266
1			3			
2			4			

DESIGN ENGINEER OF RECORD: B. A. DUKE		DATE : 6-13	
ASSEMBLED BY : H. T. BARBOUR		DATE : 6-4-12	
CHECKED BY : B. A. DUKE		DATE : 6-12	
DRAWN BY : EEM 3/95	REV. 5/7/03R	RWW/JTE	
CHECKED BY : VAP 3/95	REV. 5/1/06RR	KMM/GM	
	REV. 10/1/11	MAA/GM	

24-JUN-2013 12:14
K:\Structures\Plans\Bailey\STR5and6\TBARBOUR\Microstation\LEFT LANE\SUPERSTRUCTURE\R-2707B_SD_AS.dgn
tbarbour

STR #5

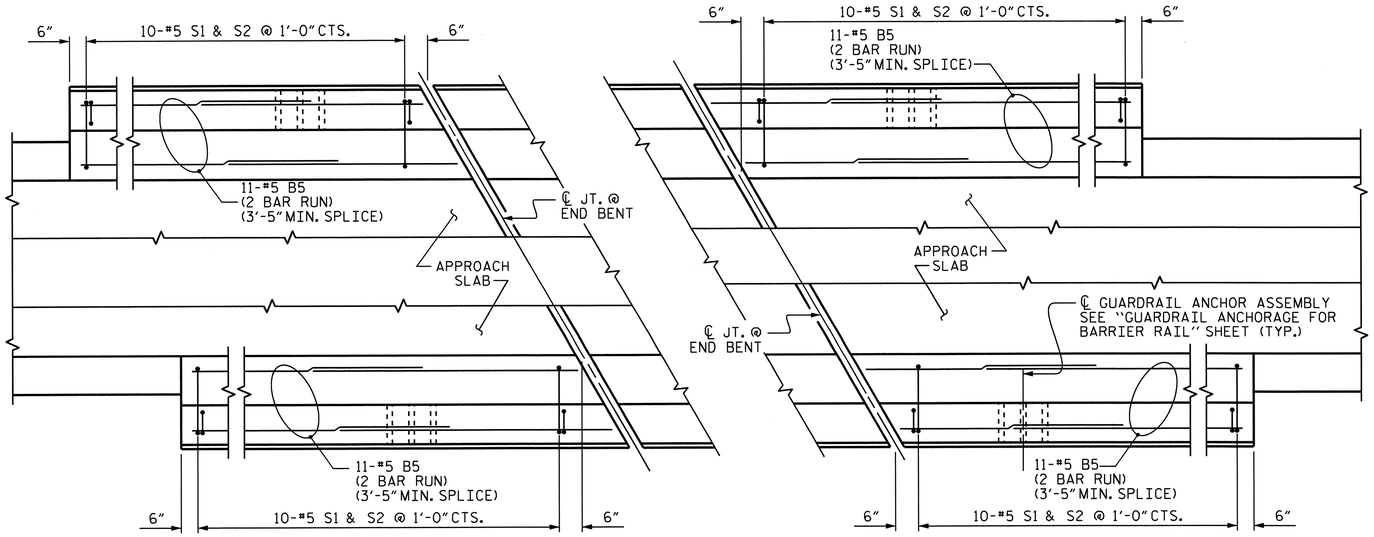

END BENT #1

END BENT #2

PLAN OF BARRIER RAIL

NOTES

THE COST OF THE BARRIER RAIL ON THE APPROACH SLAB SHALL BE INCLUDED IN THE LINEAR FOOT CONTRACT PRICE BID FOR "CONCRETE BARRIER RAIL".

THE BARRIER RAIL ON EACH APPROACH SLAB SHALL NOT BE CAST UNTIL ALL APPROACH SLAB CONCRETE HAS BEEN CAST AND HAS REACHED A MINIMUM COMPRESSIVE STRENGTH OF 3,000 PSI.

ALL REINFORCING STEEL IN BARRIER RAILS SHALL BE EPOXY COATED.

BAR TYPES

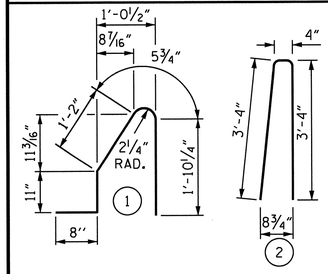

ALL BAR DIMENSIONS ARE OUT TO OUT

BILL OF MATERIAL

BARRIER RAIL ONLY

BAR	NO.	SIZE	TYPE	LENGTH	WEIGHT
* B5	88	#5	STR	7'-0"	642
* S1	40	#5	1	5'-1"	212
* S2	40	#5	2	7'-0"	292
* EPOXY COATED REINFORCING STEEL				LBS.	1146
CLASS AA CONCRETE				C.Y.	5.8
CONCRETE BARRIER RAIL					43.0 LIN. FT.

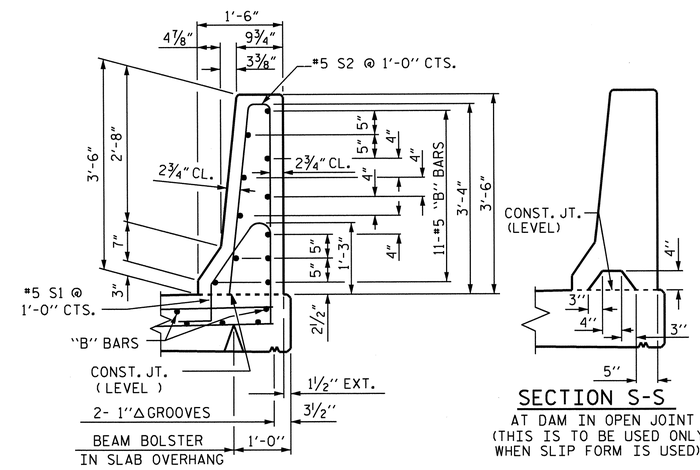

SECTION S-S

AT DAM IN OPEN JOINT
(THIS IS TO BE USED ONLY WHEN SLIP FORM IS USED)

SECTION THRU RAIL

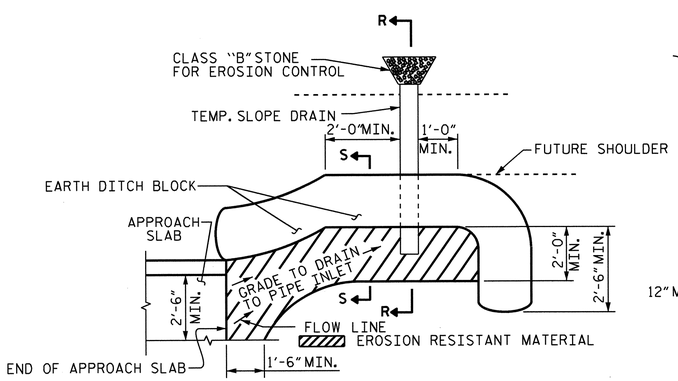

NOTE: IMMEDIATELY AFTER THE CONSTRUCTION OF THE APPROACH SLAB, THE CONTRACTOR SHALL PROVIDE TEMPORARY BERM AND SLOPE DRAIN. CONTRACTOR SHALL GRADE TO PIPE INLET AND PROVIDE EROSION RESISTANT MATERIAL AS SHOWN. THE EROSION RESISTANT MATERIAL SHALL BE EITHER 1) ASPHALT PLANT MIX, TYPE 1 OR TYPE 2, MIN. 2" DEPTH, 2) EROSION CONTROL MAT, OR 3) CONCRETE, AS DIRECTED BY THE ENGINEER. THE SLOPE DRAIN SHALL CONSIST OF A NON-PERFORATED TEMPORARY DRAINAGE PIPE, 12 INCHES IN DIAMETER.

PLAN VIEW

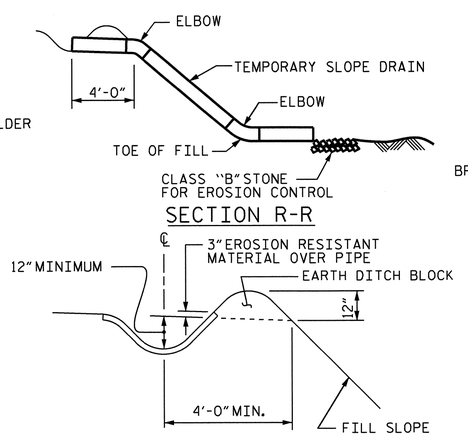

SECTION R-R

SECTION S-S

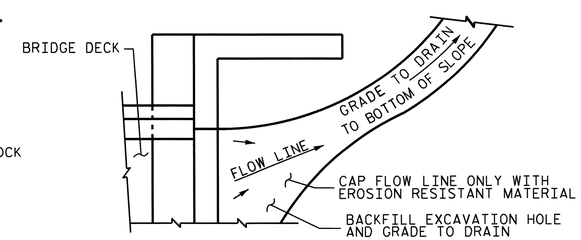

NOTE: IF THE APPROACH SLAB IS NOT CONSTRUCTED IMMEDIATELY AFTER THE BACKFILLING OF THE END BENT EXCAVATION, GRADE TO DRAIN TO THE BOTTOM OF THE SLOPE AND PROVIDE EROSION RESISTANT MATERIAL, SUCH AS FIBERGLASS ROVING OR AS DIRECTED BY THE ENGINEER TO PREVENT SOIL EROSION AND TO PROTECT THE AREA ADJACENT TO THE STRUCTURE. THE CONTRACTOR WILL BE REQUIRED TO REMOVE THESE MATERIALS PRIOR TO CONSTRUCTION OF THE APPROACH SLAB.

TEMPORARY DRAINAGE DETAIL

TEMPORARY BERM AND SLOPE DRAIN DETAILS

(TO BE USED WHEN SHOULDER BERM GUTTER IS REQUIRED)

PROJECT NO. R-2707B
CLEVELAND COUNTY
STATION: 340+70.00 -L-

SHEET 2 OF 2

STATE OF NORTH CAROLINA
DEPARTMENT OF TRANSPORTATION
RALEIGH

BRIDGE APPROACH SLAB DETAILS (LEFT LANE)

DESIGN ENGINEER OF RECORD: - DATE : -			
ASSEMBLED BY : H. T. BARBOUR	DATE : 6-4-12		
CHECKED BY : B. A. DUKE	DATE : 6-12		
DRAWN BY : FCJ 11/88	REV. 5/7/03	RWW/JTE	
CHECKED BY : ARB 11/88	REV. 5/1/06RRR	MAA/KMM	
	REV. 10/1/11	MAA/GM	

REVISIONS						SHEET NO.
NO.	BY:	DATE:	NO.	BY:	DATE:	S-176
1			3			TOTAL SHEETS
2			4			266

NORTH CAROLINA PROFESSIONAL SEAL 15825 ENGINEER K. L. APPENGRUBER
6-27-2012

STR. #5 STD. NO. BAS4 (SHT 3a)

14-MAY-2013 08:45
K:\Structures\Plans\Bailey\STR5and6\TBARBOUR\Microstation\LEFT LANE\SUPERSTRUCTURE\R-2707B_SD_AS.dgn
tbarbour

F.A. PROJECT: NHF-74 (107)

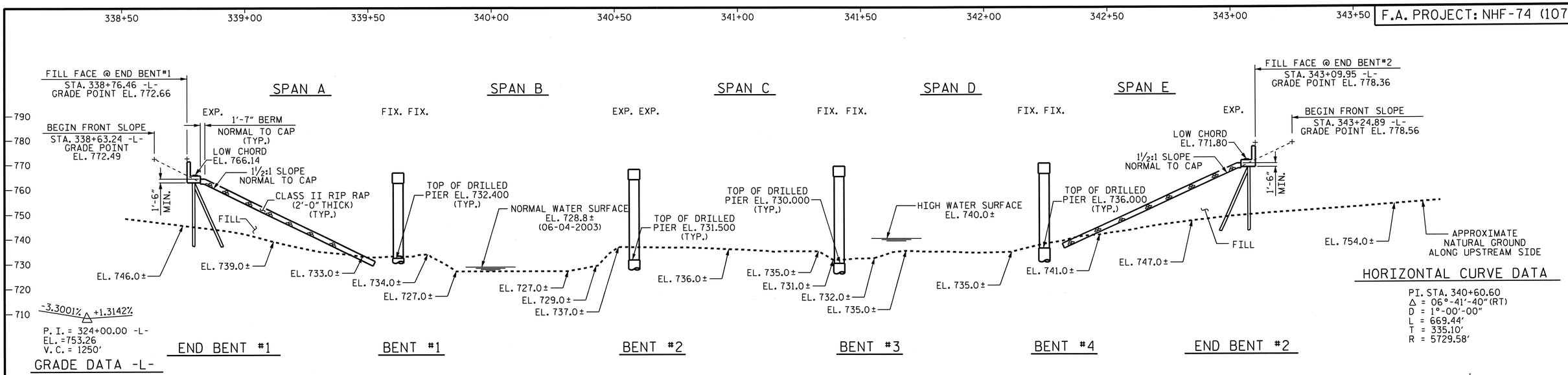

HORIZONTAL CURVE DATA

PI. STA. 340+60.60
Δ = 06°-41'-40" (RT)
D = 1°-00'-00"
L = 669.44'
T = 335.10'
R = 5729.58'

SECTION ALONG CONTROL LINE (RIGHT LANE)

(SECTION TAKEN AT RIGHT ANGLES TO BENTS AND END BENTS)
(APPROXIMATE GROUND LINE ELEVATIONS ARE ALONG THE BRIDGE ON THE UPSTREAM SIDE)

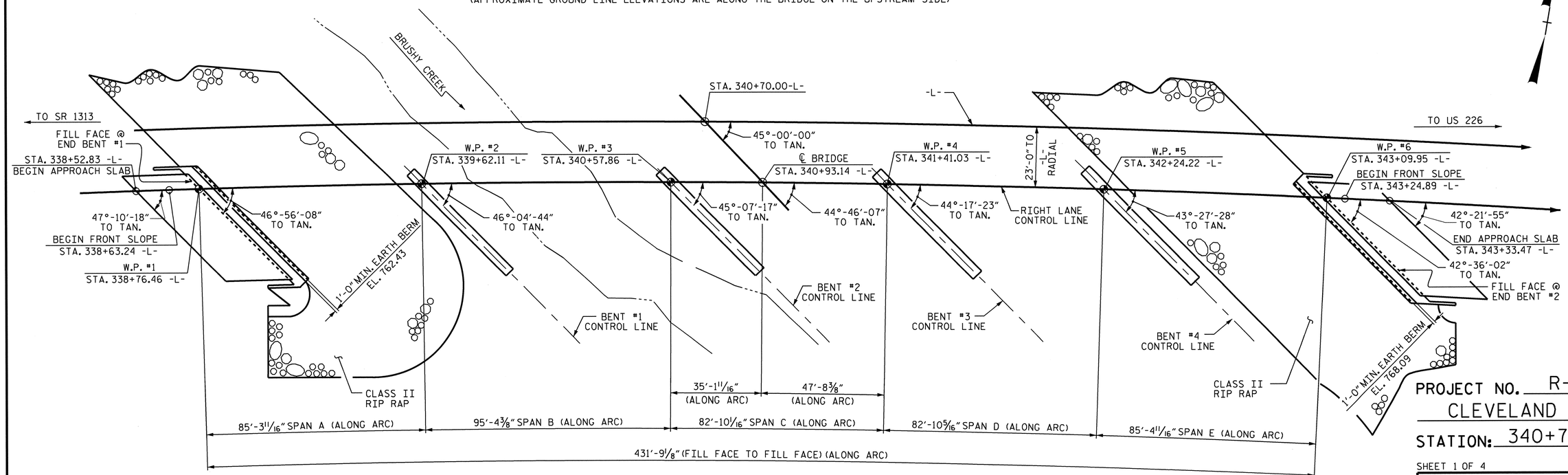

PROJECT NO. R-2707B
CLEVELAND COUNTY
STATION: 340+70.00 -L-

SHEET 1 OF 4 BRIDGE No. 462

I HEREBY CERTIFY THESE PLANS
ARE THE AS-BUILT PLANS

PLAN (RIGHT LANE)

(PILES NOT SHOWN IN PLAN VIEW)

NORTH CAROLINA PROFESSIONAL SEAL 13014 ENGINEER QUANG H. NGUYEN
Quang H. Nguyen 6-27-13

NORTH CAROLINA PROFESSIONAL SEAL 15829 BRIDGE ENGINEER DAVID L. KLAPPENBACH
6-27-2013

STATE OF NORTH CAROLINA
DEPARTMENT OF TRANSPORTATION
RALEIGH

GENERAL DRAWING
FOR BRIDGE ON US 74
OVER BRUSHY CREEK
BETWEEN SR 1313 AND
US 226
(RIGHT LANE)

REVISIONS						SHEET NO.
NO.	BY:	DATE:	NO.	BY:	DATE:	S-177
1			3			TOTAL SHEETS
2			4			266

STR #6

DESIGN ENGINEER OF RECORD: B. A. DUKE		DATE :	5-13
DRAWN BY : H. T. BARBOUR		DATE :	03-22-12
CHECKED BY : D. A. GLADDEN		DATE :	03-13

26-JUN-2013 08:45
K:\Structures\Plans\Bailey\STR5and6\TBARBOUR\Microstation\RIGHT LANE\misc\R-2707B_SD_GD.dgn
tbarbour

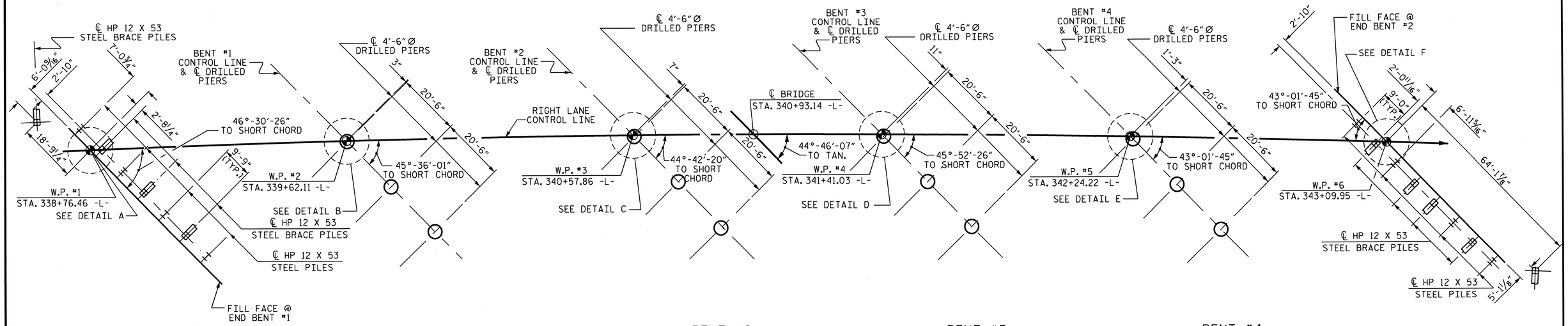

FOUNDATION LAYOUT

DIMENSIONS LOCATING PILES ARE TO THE PILE CENTERLINE AT THE BOTTOM OF CAP

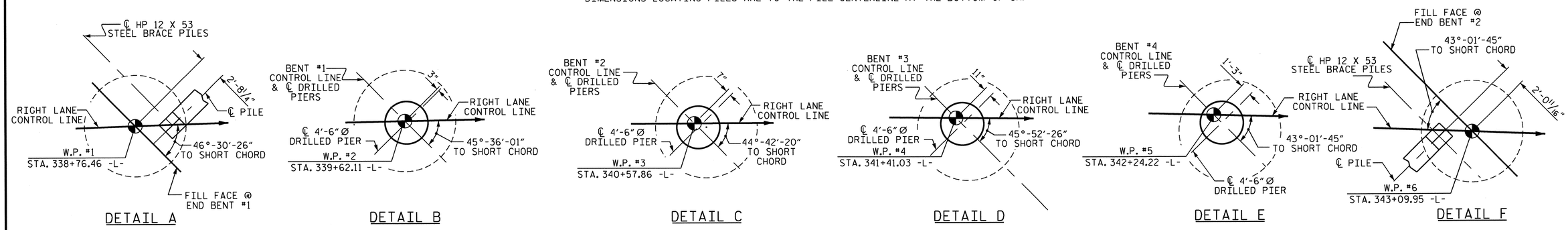

NOTES

FOR DRILLED PIERS, SEE SECTION 411 OF THE STANDARD SPECIFICATIONS.

DRILLED PIERS AT BENT NO. 1 THROUGH BENT NO. 4 ARE DESIGNED FOR A FACTORED RESISTANCE OF 555 TONS PER PIER. CHECK FIELD CONDITIONS FOR THE REQUIRED TIP RESISTANCE OF 43 TSF.

INSTALL DRILLED PIERS AT BENT NO. 1 THAT EXTEND TO AN ELEVATION NO HIGHER THAN 710 FT. AND SATISFY THE REQUIRED TIP RESISTANCE.

INSTALL DRILLED PIERS AT BENT NO. 2 THAT EXTEND TO AN ELEVATION NO HIGHER THAN 700 FT. AND SATISFY THE REQUIRED TIP RESISTANCE.

INSTALL DRILLED PIERS AT BENT NO. 3 THAT EXTEND TO AN ELEVATION NO HIGHER THAN 694 FT. AND SATISFY THE REQUIRED TIP RESISTANCE.

INSTALL DRILLED PIERS AT BENT NO. 4 THAT EXTEND TO AN ELEVATION NO HIGHER THAN 706 FT. AND SATISFY THE REQUIRED TIP RESISTANCE.

THE SCOUR CRITICAL ELEVATION FOR BENT NO. 1 THROUGH BENT NO. 4 IS ELEVATION 725 FT. (BENT 1), 710 FT. (BENT 2), 714 FT. (BENT 3) AND 721 FT. (BENT 4). SCOUR CRITICAL ELEVATIONS ARE USED TO MONITOR POSSIBLE SCOUR PROBLEMS DURING THE LIFE OF THE STRUCTURE.

SPT IS REQUIRED FOR DRILLED PIERS AT BENT NO. 1 THROUGH BENT NO. 4. FOR SPT TESTING, SEE SECTION 411 OF THE STANDARD SPECIFICATIONS.

SID INSPECTIONS ARE REQUIRED FOR DRILLED PIERS AT BENT NO. 1 THROUGH BENT NO. 4. FOR SID INSPECTIONS, SEE SECTION 411 OF THE STANDARD SPECIFICATIONS.

CSL TUBES ARE REQUIRED AND CSL TESTING MAY BE REQUIRED FOR DRILLED PIERS. THE ENGINEER WILL DETERMINE THE NEED FOR CSL TESTING. FOR CSL TESTING, SEE SECTION 411 OF THE STANDARD SPECIFICATIONS.

PERMANENT STEEL CASINGS MAY BE REQUIRED FOR DRILLED PIERS AT BENT NO. 1 AND BENT NO. 2. IF REQUIRED, DO NOT EXTEND PERMANENT CASINGS BELOW ELEVATION 725 FT. (BENT NO. 1) OR ELEVATION 718 FT. (BENT NO. 2).

FOR PILES, SEE SECTION 450 OF THE STANDARD SPECIFICATIONS.

PILES AT END BENT NO. 1 AND END BENT NO. 2 ARE DESIGNED FOR A FACTORED RESISTANCE OF 110 TONS PER PILE.

DRIVE PILES AT END BENT NO. 1 AND END BENT NO. 2 TO A REQUIRED DRIVING RESISTANCE OF 185 TONS PER PILE.

PROJECT NO. R-2707B
CLEVELAND COUNTY
STATION: 340+70.00 -L-

SHEET 2 OF 4

STATE OF NORTH CAROLINA
DEPARTMENT OF TRANSPORTATION
RALEIGH

GENERAL DRAWING FOR BRIDGE ON US 74 OVER BRUSHY CREEK BETWEEN SR 1313 AND US 226 (RIGHT LANE)

NORTH CAROLINA PROFESSIONAL SEAL 15825 ENGINEER D. KL APPENBACH
6-27-2013

REVISIONS						SHEET NO.
NO.	BY:	DATE:	NO.	BY:	DATE:	S-178
1			3			TOTAL SHEETS
2			4			266

DESIGN ENGINEER OF RECORD: B. A. DUKE		DATE :	5-13
DRAWN BY : H. T. BARBOUR		DATE :	03-21-12
CHECKED BY : D. A. GLADDEN		DATE :	03-13

25-JUN-2013 10:05
K:\Structures\Plans\Bailey\STR5and6\TBARBOUR\Microstation\RIGHT LANE\misc\R-2707B_SD_GD.dgn
tbarbour

STR #6

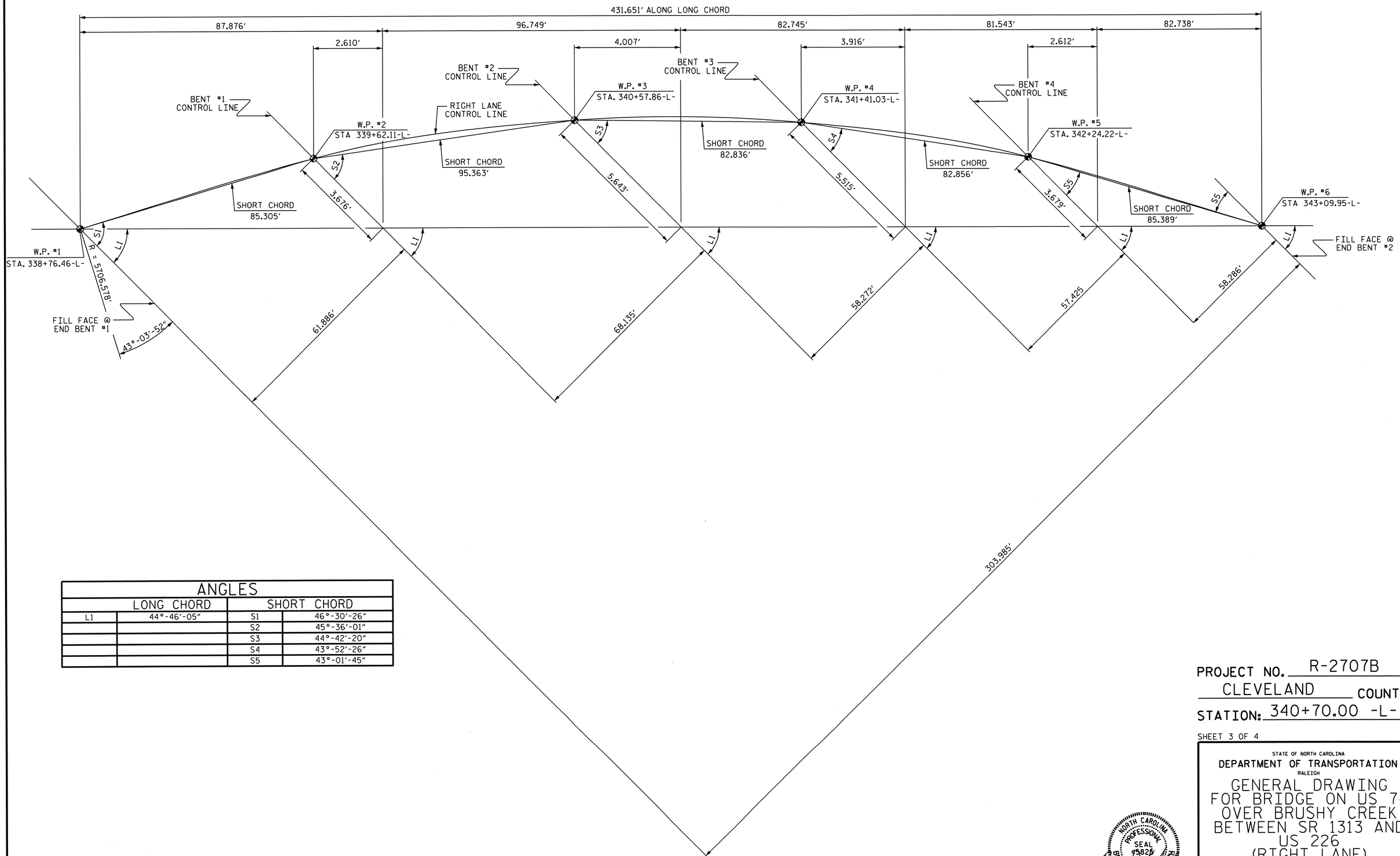

ANGLES			
LONG CHORD		SHORT CHORD	
L1	44°-46'-05"	S1	46°-30'-26"
		S2	45°-36'-01"
		S3	44°-42'-20"
		S4	43°-52'-26"
		S5	43°-01'-45"

LONG CHORD LAYOUT

ALL BENTS ARE PARALLEL

PROJECT NO. R-2707B

CLEVELAND COUNTY

STATION: 340+70.00 -L-

SHEET 3 OF 4

STATE OF NORTH CAROLINA
DEPARTMENT OF TRANSPORTATION
RALEIGH

GENERAL DRAWING FOR BRIDGE ON US 74 OVER BRUSHY CREEK BETWEEN SR 1313 AND US 226 (RIGHT LANE)

NORTH CAROLINA PROFESSIONAL SEAL 15826 ENGINEER BRUCE D. KLAPPENBACH
6-27-2013

REVISIONS							
NO.	BY:	DATE:	NO.	BY:	DATE:	SHEET NO. S-179
1			3			TOTAL SHEETS 266
2			4			

DESIGN ENGINEER OF RECORD: B. A. DUKE DATE : 5-13

DRAWN BY : H. T. BARBOUR DATE : 05-10-12

CHECKED BY : D. A. GLADDEN DATE : 03-13

14-MAY-2013 09:15
K:\Structures\Plans\Bailey\STR5and6\TBARBOUR\Microstation\RIGHT LANE\misc\R-2707B_SD_GD.dgn
tbarbour

STR #6

NCBDS

BENCHMARK #16 : 8" NAIL IN BASE OF 24" Ø RED OAK TREE; STA. 342+82.56-L-, 228.27' RT. EL.735.980

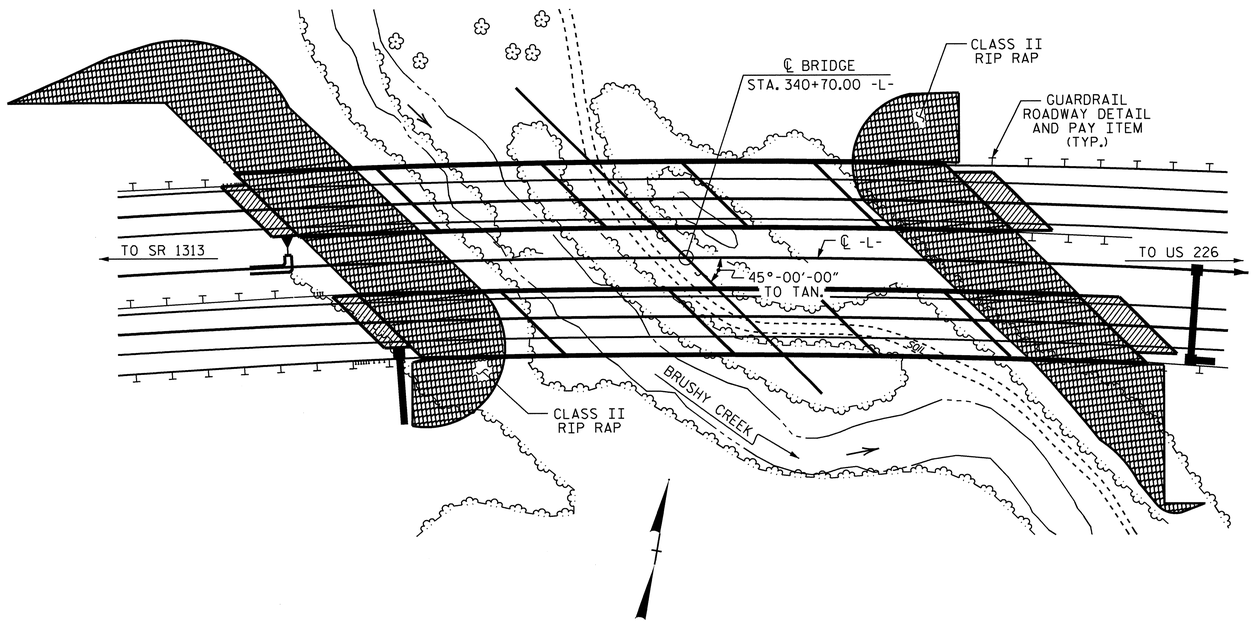

NOTE: FOR UTILITY INFORMATION, SEE UTILITY PLANS AND SPECIAL PROVISIONS.

LOCATION SKETCH

NOTES

ASSUMED LIVE LOAD = HL 93 OR ALTERNATE LOADING.

FOR OTHER DESIGN DATA AND GENERAL NOTES, SEE SHEET SN.

FOR EROSION CONTROL MEASURES SEE EROSION CONTROL PLANS.

THIS BRIDGE HAS BEEN DESIGNED IN ACCORDANCE WITH THE AASHTO LRFD BRIDGE DESIGN SPECIFICATIONS.

REMOVABLE FORMS MAY BE USED IN LIEU OF METAL STAY-IN-PLACE FORMS IN ACCORDANCE WITH ARTICLE 420-3 OF THE STANDARD SPECIFICATIONS.

THIS STRUCTURE HAS BEEN DESIGNED IN ACCORDANCE WITH "HEC 18, EVALUATING SCOUR AT BRIDGES".

THE CONTRACTOR SHALL PROVIDE INDEPENDENT ASSURANCE SAMPLES OF REINFORCING STEEL AS FOLLOWS: FOR PROJECTS REQUIRING UP TO 400 TONS OF REINFORCING STEEL, ONE 30 INCH SAMPLE OF EACH SIZE BAR USED, AND FOR PROJECTS REQUIRING OVER 400 TONS OF REINFORCING STEEL, TWO 30 INCH SAMPLES OF EACH SIZE BAR USED. THE BARS FROM WHICH THE SAMPLES ARE TAKEN MUST THEN BE SPLICED WITH REPLACEMENT BARS OF THE SIZE AND LENGTH OF THE SAMPLE, PLUS A MINIMUM LAP SPLICE OF THIRTY BAR DIAMETERS. PAYMENT FOR THE SAMPLES OF REINFORCING STEEL SHALL BE CONSIDERED INCIDENTAL TO VARIOUS PAY ITEMS.

THE LOCATION OF THE CONSTRUCTION JOINT IN THE DRILLED PIERS IS BASED ON AN APPROXIMATE GROUND LINE ELEVATION. IF THE CONSTRUCTION JOINT IS ABOVE THE ACTUAL GROUND ELEVATION, THE CONTRACTOR SHALL PLACE THE CONSTRUCTION JOINT 1 FT. BELOW THE GROUND LINE.

THE USE OF NEEDLE BEAMS TO SUPPORT THE DECK SLAB WILL ONLY BE ALLOWED IN THE ACUTE CORNERS OF THE SLAB.

FOR SUBMITTAL OF WORKING DRAWINGS, SEE SPECIAL PROVISIONS.

FOR FALSEWORK AND FORMWORK, SEE SPECIAL PROVISIONS.

FOR CRANE SAFETY, SEE SPECIAL PROVISIONS.

FOR GROUT FOR STRUCTURES, SEE SPECIAL PROVISIONS.

THIS BRIDGE IS LOCATED IN SEISMIC ZONE 1.

THE CLASS AA CONCRETE IN THE BRIDGE DECK SHALL CONTAIN FLY ASH OR GROUND GRANULATED BLAST FURNACE SLAG AT THE SUBSTITUTION RATE SPECIFIED IN ARTICLE 1024-1 AND IN ACCORDANCE WITH ARTICLES 1024-5 AND 1024-6 OF THE STANDARD SPECIFICATIONS. NO PAYMENT WILL BE MADE FOR THIS SUBSTITUTION AS IT IS CONSIDERED INCIDENTAL TO THE COST OF THE REINFORCED CONCRETE DECK SLAB.

FOR PLACING LOAD ON STRUCTURES, SEE SPECIAL PROVISIONS.

HYDRAULIC DATA

DESIGN DISCHARGE	= 4700 C.F.S.
FREQUENCY OF DESIGN FLOOD	= 50 YR.
DESIGN HIGH WATER ELEVATION	= 741.100
DRAINAGE AREA	= 25.5 SQ. MI.
BASIC DISCHARGE (Q100)	= 5600 C.F.S.
BASIC HIGH WATER ELEVATION	= 742.100

OVERTOPPING FLOOD DATA

OVERTOPPING DISCHARGE	= 8200+ C.F.S.
FREQUENCY OF OVERTOPPING FLOOD	= 500 YR. +
OVERTOPPING FLOOD ELEVATION	= 778.700

TOTAL BILL OF MATERIAL

	4'-6" Ø DRILLED PIERS IN SOIL	4'-6" Ø DRILLED PIERS NOT IN SOIL	PERMANENT STEEL CASING FOR 4'-6" Ø DRILLED PIER	SID INSPECTIONS	SPT TESTING	CSL TESTING	REINFORCED CONCRETE DECK SLAB	GROOVING BRIDGE FLOORS	CLASS A CONCRETE	BRIDGE APPROACH SLABS
	LIN. FT.	LIN. FT.	LIN. FT.	EA.	EA.	EA.	SQ. FT.	SQ. FT.	CU. YDS.	LUMP SUM
SUPERSTRUCTURE							17734	16576		LUMP SUM
END BENT NO. 1									52.5	
BENT NO. 1	32.70	34.50	22.20	3	3				88.0	
BENT NO. 2	60.00	34.50	40.50	3	3				90.9	
BENT NO. 3	64.50	43.50		3	3				94.5	
BENT NO. 4	64.50	25.50		3	3				87.6	
END BENT NO. 2									54.8	
TOTAL	221.70	138.00	62.70	12	12	4	17734	16576	468.3	LUMP SUM

TOTAL BILL OF MATERIAL

	REINFORCING STEEL	SPIRAL COLUMN REINFORCING STEEL	54" PRESTRESSED CONCRETE GIRDERS		HP 12 X 53 STEEL PILES		CONCRETE BARRIER RAIL	RIP RAP CLASS II (2'- 0" THICK)	GEOTEXTILE FOR DRAINAGE	ELASTOMERIC BEARINGS	EXPANSION JOINT SEALS	APPLICATION OF BRIDGE COATING*
	LBS.	LBS.	NO.	LIN. FT.	NO.	LIN. FT.	LIN. FT.	TONS	SQ. YDS.	LUMP SUM	LUMP SUM	LUMP SUM
SUPERSTRUCTURE			20	1693.74			902.85			LUMP SUM	LUMP SUM	LUMP SUM
END BENT NO. 1	8625				8	240		695	770			
BENT NO. 1	24546	4729										
BENT NO. 2	27774	5706										
BENT NO. 3	29830	6329										
BENT NO. 4	26698	5370										
END BENT NO. 2	9380				9	315		1015	1125			
TOTAL	126853	22134	20	1693.74	17	555	902.85	1710	1895	LUMP SUM	LUMP SUM	LUMP SUM

* APPROXIMATE SURFACE AREA TO BE PAINTED = 7119 SF

PROJECT NO. R-2707B
CLEVELAND COUNTY
STATION: 340+70.00 -L-

SHEET 4 OF 4

STATE OF NORTH CAROLINA
DEPARTMENT OF TRANSPORTATION
RALEIGH

GENERAL DRAWING FOR BRIDGE ON US 74 OVER BRUSHY CREEK BETWEEN SR 1313 AND US 226 (RIGHT LANE)

NORTH CAROLINA PROFESSIONAL SEAL 15826 ENGINEER BRUCE D. KLAPPENBACH
3-5-2014

REVISIONS								SHEET NO. S-180
NO.	BY:	DATE:	NO.	BY:	DATE:			TOTAL SHEETS 266
1			3					
2			4					

DESIGN ENGINEER OF RECORD: B. A. DUKE DATE : 5-13
DRAWN BY : H. T. BARBOUR DATE : 03-22-12
CHECKED BY : D. A. GLADDEN DATE : 03-13

05-MAR-2014 15:46
R:\Structures\Plans\Bailey\STR5and6\TBARBOUR\Microstation\RIGHT LANE\misc\R-2707B_SD_GD.dgn
bklappenbach

STR #6

LOAD AND RESISTANCE FACTOR RATING (LRFR) SUMMARY FOR PRESTRESSED CONCRETE GIRDERS

LEVEL		VEHICLE	WEIGHT (W) (TONS)	CONTROLLING LOAD RATING (#)	MINIMUM RATING FACTORS (RF)	TONS = W X RF	STRENGTH I LIMIT STATE											SERVICE III LIMIT STATE						COMMENT NUMBER
								MOMENT					SHEAR						MOMENT					
							LIVELOAD FACTORS	DISTRIBUTION FACTORS (DF)	RATING FACTOR	SPAN	GIRDER LOCATION	DISTANCE FROM LEFT END OF SPAN (ft)	DISTRIBUTION FACTORS (DF)	RATING FACTOR	SPAN	GIRDER LOCATION	DISTANCE FROM LEFT END OF SPAN (ft)	LIVELOAD FACTORS	DISTRIBUTION FACTORS (DF)	RATING FACTOR	SPAN	GIRDER LOCATION	DISTANCE FROM LEFT END OF SPAN (ft)	
DESIGN LOAD RATING		HL-93(Inv)	N/A	1	1.01	--	1.75	0.828	1.61	C	ER	40.658	1.212	1.81	C	I	24.343	0.80	1.206	1.01	B	I	46.848	
		HL-93(Opr)	N/A	--	2.09	--	1.35	0.828	2.09	C	ER	40.658	1.212	2.34	C	I	24.343	N/A	--	--	--	--	--	
		HS-20(Inv)	36.000	2	1.36	48.915	1.75	0.828	2.15	C	ER	40.658	1.212	2.22	C	I	24.343	0.80	0.778	1.36	C	I	40.572	
		HS-20(Opr)	36.000	--	2.78	100.220	1.35	0.828	2.78	C	ER	40.658	1.212	2.88	C	I	24.343	N/A	--	--	--	--	--	
LEGAL LOAD RATING	SV	SNSH	13.500	--	3.13	42.237	1.4	0.828	6.18	C	ER	40.658	1.212	6.48	C	I	24.343	0.80	0.778	3.13	C	I	40.572	
		SNGARBS2	20.000	--	2.31	46.100	1.4	0.828	4.55	C	ER	40.658	1.212	4.65	C	I	24.343	0.80	0.778	2.31	C	I	40.572	
		SNAGRIS2	22.000	--	2.17	47.782	1.4	0.828	4.29	C	ER	40.658	1.212	4.33	C	I	24.343	0.80	0.778	2.17	C	I	40.572	
		SNCOTTS3	27.250	--	1.56	42.405	1.4	0.828	3.08	C	ER	40.658	1.212	3.24	C	I	24.343	0.80	0.778	1.56	C	I	40.572	
		SNAGGRS4	34.925	--	1.29	45.062	1.4	0.828	2.55	C	ER	40.658	1.212	2.72	C	I	24.343	0.80	0.778	1.29	C	I	40.572	
		SNS5A	35.550	--	1.26	44.879	1.4	0.828	2.49	C	ER	40.658	1.212	2.77	C	I	24.343	0.80	0.778	1.26	C	I	40.572	
		SNS6A	39.950	--	1.15	46.105	1.4	0.828	2.28	C	ER	40.658	1.212	2.53	C	I	24.343	0.80	0.778	1.15	C	I	40.572	
		SNS7B	42.000	--	1.10	46.152	1.4	0.828	2.17	C	ER	40.658	1.212	2.50	C	I	24.343	0.80	0.778	1.10	C	I	40.572	
	TTST	TNAGRIT3	33.000	--	1.41	46.400	1.4	0.828	2.78	C	ER	40.658	1.212	3.01	C	I	24.343	0.80	0.778	1.41	C	I	40.572	
		TNT4A	33.075	--	1.41	46.673	1.4	0.828	2.79	C	ER	40.658	1.212	2.92	C	I	24.343	0.80	0.778	1.41	C	I	40.572	
		TNT6A	41.600	--	1.15	47.830	1.4	0.828	2.27	C	ER	40.658	1.212	2.70	C	I	24.343	0.80	0.778	1.15	C	I	40.572	
		TNT7A	42.000	--	1.15	48.442	1.4	0.828	2.28	C	ER	40.658	1.212	2.64	C	I	24.343	0.80	0.778	1.15	C	I	40.572	
		TNT7B	42.000	--	1.19	49.895	1.4	0.828	2.35	C	ER	40.658	1.212	2.43	C	I	24.343	0.80	0.778	1.19	C	I	40.572	
		TNAGRIT4	43.000	--	1.13	48.762	1.4	0.828	2.24	C	ER	40.658	1.212	2.35	C	I	24.343	0.80	0.778	1.13	C	I	40.572	
		TNAGT5A	45.000	--	1.07	48.197	1.4	0.828	2.12	C	ER	40.658	1.212	2.36	C	I	24.343	0.80	0.778	1.07	C	I	40.572	
		TNAGT5B	45.000	3	1.06	47.688	1.4	0.828	2.09	C	ER	40.658	1.212	2.24	C	I	24.343	0.80	0.778	1.06	C	I	40.572	

LOAD FACTORS:

DESIGN LOAD RATING FACTORS	LIMIT STATE	γ_{DC}	γ_{DW}
	STRENGTH I	1.25	1.50
	SERVICE III	1.00	1.00

NOTES:

MINIMUM RATING FACTORS ARE BASED ON THE STRENGTH I AND SERVICE III LIMIT STATES.

ALLOWABLE STRESSES FOR SERVICE III LIMIT STATE ARE AS REQUIRED FOR DESIGN.

COMMENTS:

1.
2.
3.
4.

(#) CONTROLLING LOAD RATING

(1) DESIGN LOAD RATING (HL-93)

(2) DESIGN LOAD RATING (HS-20)

(3) LEGAL LOAD RATING **

** SEE CHART FOR VEHICLE TYPE

GIRDER LOCATION

I - INTERIOR GIRDER
EL - EXTERIOR LEFT GIRDER
ER - EXTERIOR RIGHT GIRDER

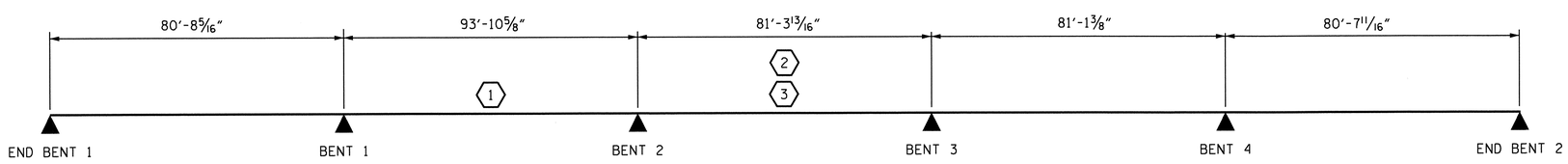

LRFR SUMMARY

PROJECT NO. R-2707B
CLEVELAND COUNTY
STATION: 340+70.00 -L-

STATE OF NORTH CAROLINA
DEPARTMENT OF TRANSPORTATION
RALEIGH

LRFR SUMMARY FOR PRESTRESSED CONCRETE GIRDERS
(NON-INTERSTATE TRAFFIC)
(RIGHT LANE)

NORTH CAROLINA PROFESSIONAL SEAL 15825 ENGINEER BRUCE O. KLAPPENBACH
6-27-2013

REVISIONS						SHEET NO.
NO.	BY:	DATE:	NO.	BY:	DATE:	S-181
1			3			TOTAL SHEETS
2			4			266

STD. NO. LRFR1

ASSEMBLED BY : B. A. DUKE DATE : 6-24-13
CHECKED BY : S. T. CHAMPION DATE : 6-27-13

DRAWN BY : MAA 1/08
CHECKED BY : GM/DI 2/08

REV. 11/12/08RR MAA/GM
REV. 10/1/11 MAA/GM

DESIGN ENGINEER OF RECORD:
B. A. DUKE DATE : 6-27-13

27-JUN-2013 12:56
R:\Structures\Plans\Bailey\STR5and6\baduke\Microstation\R-2707B_SD_LRFR.dgn
bklappenbach

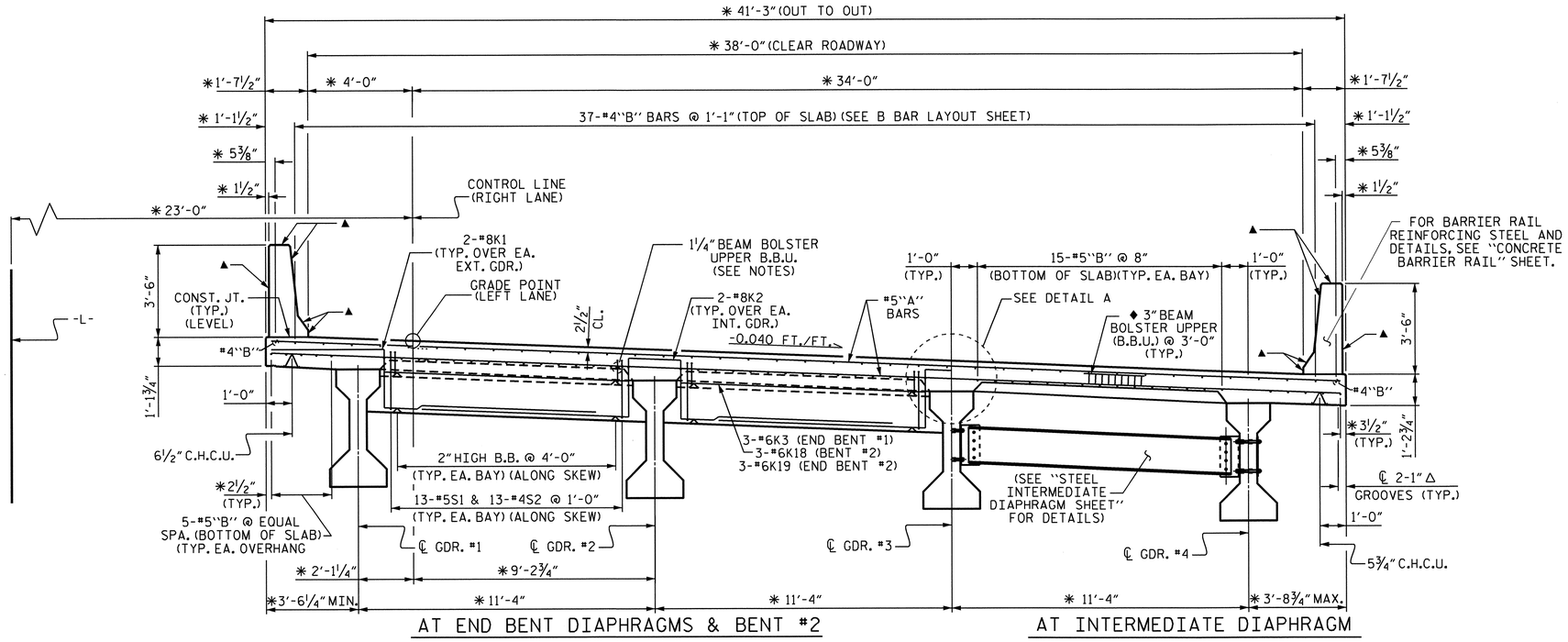

AT END BENT DIAPHRAGMS & BENT #2

AT INTERMEDIATE DIAPHRAGM

TYPICAL SECTION

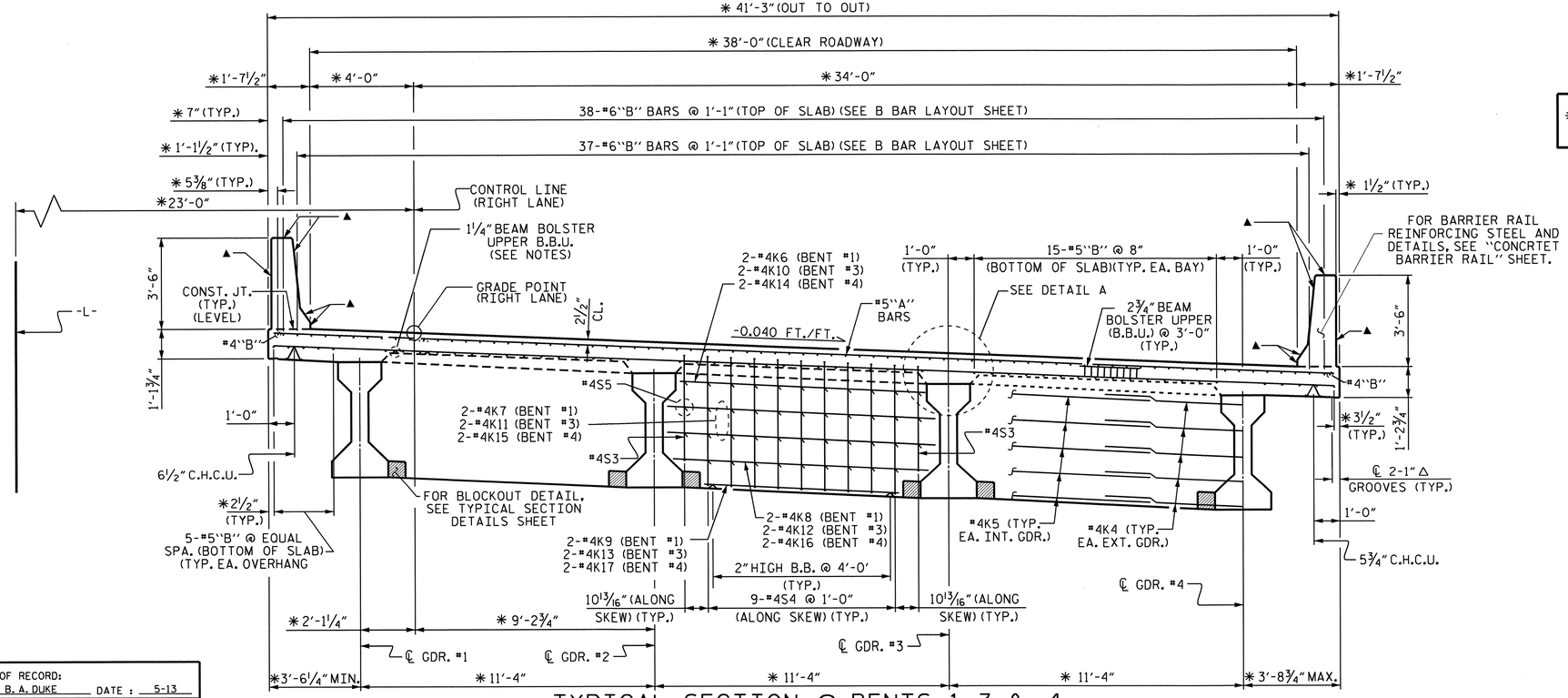

TYPICAL SECTION @ BENTS 1, 3 & 4

NOTES

LONGITUDINAL STEEL MAY BE SHIFTED SLIGHTLY, AS NECESSARY, TO AVOID INTERFERENCE WITH STIRRUPS IN PRESTRESSED CONCRETE GIRDERS.

PREVIOUSLY CAST CONCRETE IN A CONTINUOUS UNIT SHALL HAVE ATTAINED A MINIMUM COMPRESSIVE STRENGTH OF 3,000 PSI BEFORE ADDITIONAL CONCRETE IS CAST IN THE UNIT.

BARRIER RAIL IN A CONTINUOUS UNIT SHALL NOT BE CAST UNTIL ALL SLAB CONCRETE IN THE UNIT HAS BEEN CAST AND HAS REACHED A MINIMUM COMPRESSIVE STRENGTH OF 3,000 PSI.

PROVIDE 1¼" HIGH BEAM BOLSTERS UPPER AT 4'-0" CTS. ATOP THE METAL STAY-IN-PLACE FORMS TO SUPPORT THE BOTTOM MAT OF 'A' BARS. WHEN USING REMOVABLE FORMS, PROVIDE CONTINUOUS HIGH CHAIRS FOR METAL DECK (C.H.C.M.) @ 4'-0" CTS. WITH A HEIGHT TO SUPPORT THE BOTTOM MAT OF 'A' BARS A CLEAR DISTANCE OF 2½" ABOVE THE TOP OF THE REMOVABLE FORM.

◆ USE THIS SIZE BAR SUPPORT IN THE AREAS WITH #4"B" BARS. FOR OTHER AREAS WITH #6"B" BARS, USE THE BAR SUPPORT AS SHOWN IN TYPICAL SECTION AT BENT.

▲ ALL EXPOSED SURFACES OF THE BARRIER RAILS TO BE PAINTED, SEE SPECIAL PROVISION FOR "APPLICATION OF BRIDGE COATING".

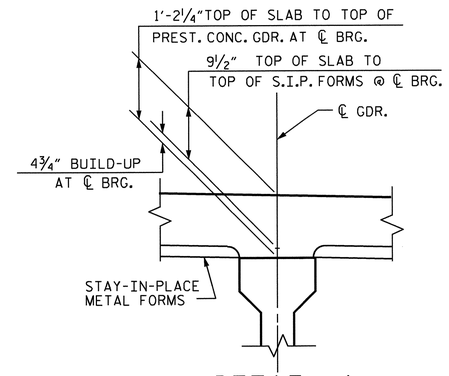

DETAIL A

✱ DIMENSIONS ARE TO CIRCLES CONCENTRIC WITH -L-. GIRDERS ARE ON THE CHORDS OF THESE CIRCLES.

PROJECT NO. R2707B

CLEVELAND COUNTY

STATION: 340+70.00 -L-

SHEET 1 OF 3

STATE OF NORTH CAROLINA
DEPARTMENT OF TRANSPORTATION
RALEIGH

SUPERSTRUCTURE TYPICAL SECTION (RIGHT LANE)

NORTH CAROLINA PROFESSIONAL SEAL 15825 ENGINEER D. KLAPPENBACH
BRIDGE
3-6-2014

REVISIONS								SHEET NO. S-182
NO.	BY:	DATE:	NO.	BY:	DATE:			TOTAL SHEETS 266
1			3					
2			4					

DESIGN ENGINEER OF RECORD:	B. A. DUKE	DATE :	5-13
DRAWN BY :	H. T. BARBOUR	DATE :	8-05-11
CHECKED BY :	D. A. GLADDEN	DATE :	2-12

06-MAR-2014 08:30
R:\Structures\Plans\Bailey\STR5and6\TBARBOUR\Microstation\RIGHT LANE\superstructure\R2707B_SD_TS.dgn
bklappenbach

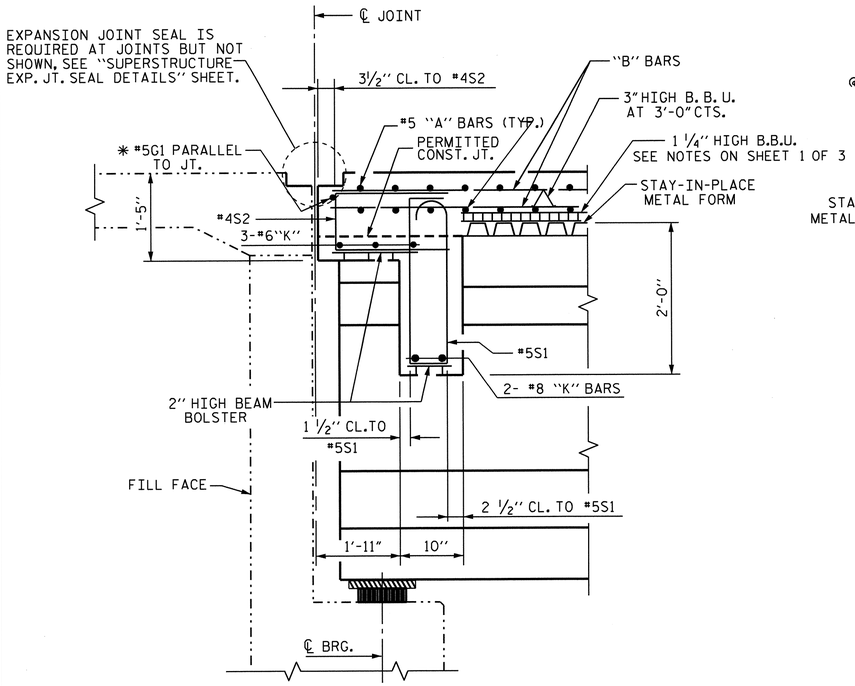

SECTION AT END BENT DIAPHRAGM

✱ #5 G1 MAY BE SHIFTED SLIGHTLY, AS NECESSARY, TO CLEAR REINFORCING STEEL AND STIRRUPS.

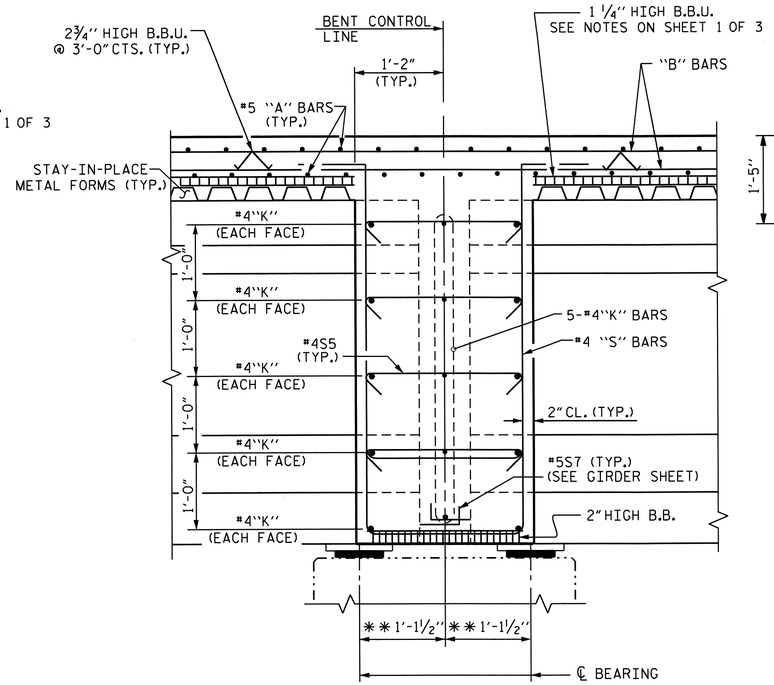

SECTION AT BENT DIAPHRAGMS 1, 3 & 4

✱✱ MEASURED ALONG ℄ GIRDER

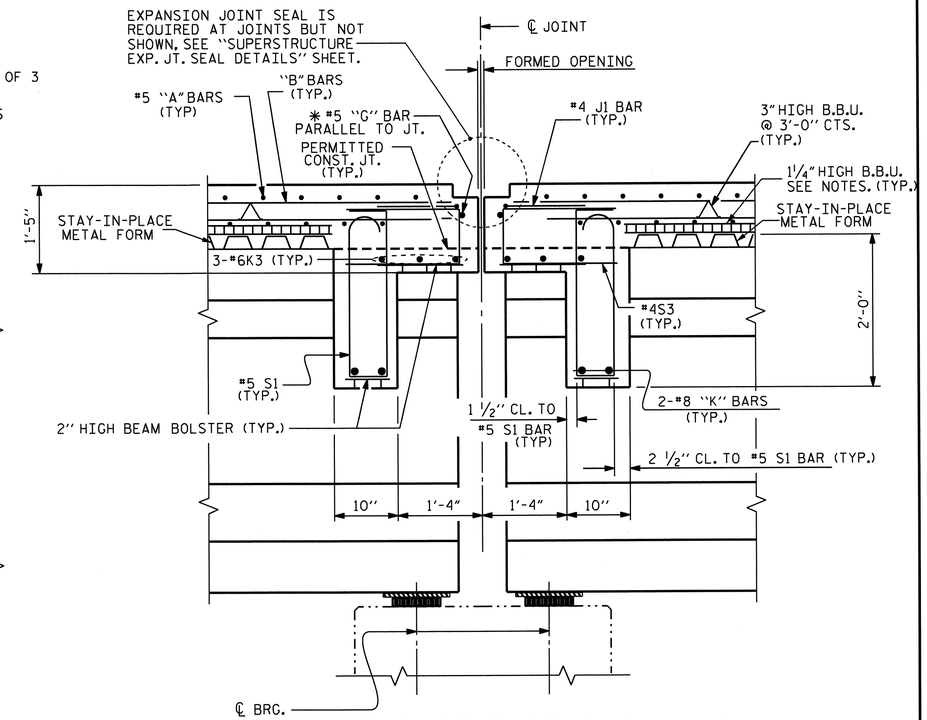

SECTION AT BENT DIAPHRAGM 2

✱ #5G BAR MAY BE SHIFTED SLIGHTLY, AS NECESSARY, TO CLEAR REINFORCING STEEI AND STIRRUPS.

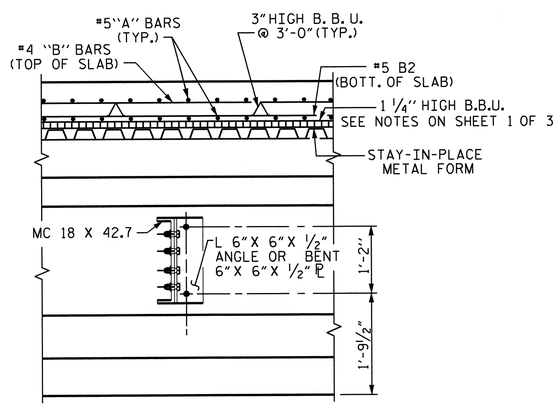

SECTION AT INTERMEDIATE STEEL DIAPHRAGM

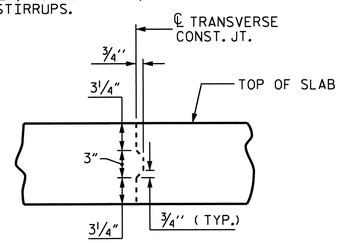

TRANSVERSE CONSTRUCTION JOINT DETAIL

NOTE: REINFORCING STEEL IN SLAB NOT SHOWN. LONGITUDINAL REINFORCING STEEL SHALL BE CONTINUOUS THROUGH JOINT.

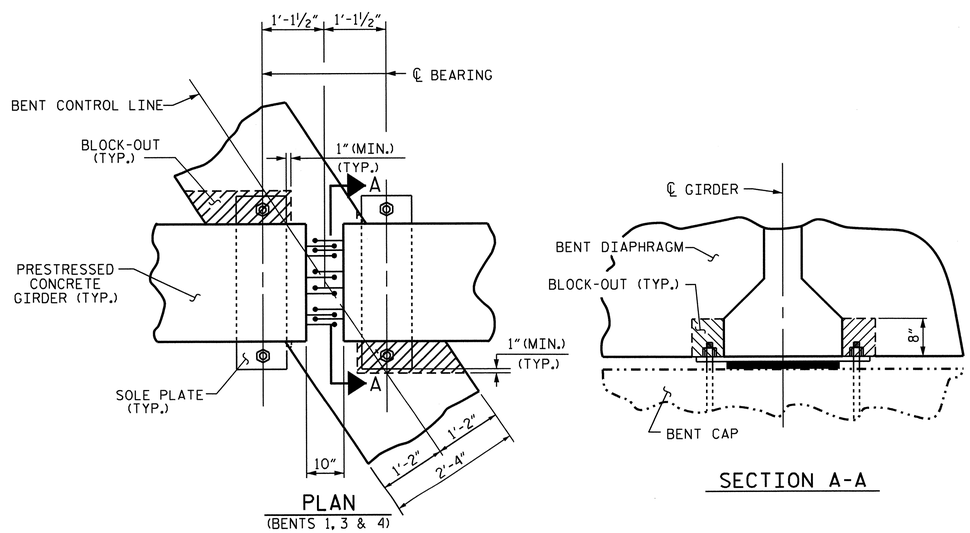

PLAN (BENTS 1, 3 & 4)

SECTION A-A

BENT DIAPHRAGM BLOCK-OUT DETAIL

PROJECT NO. R-2707B

CLEVELAND COUNTY

STATION: 340+70.00-L-

SHEET 2 OF 3

STATE OF NORTH CAROLINA
DEPARTMENT OF TRANSPORTATION
RALEIGH

SUPERSTRUCTURE TYPICAL SECTION DETAILS (RIGHT LANE)

NORTH CAROLINA PROFESSIONAL SEAL 19825 ENGINEER BRUCE D. KLAPPENBACH 6-27-2013

REVISIONS						SHEET NO.
NO.	BY:	DATE:	NO.	BY:	DATE:	S-183
1			3			TOTAL SHEETS
2			4			266

STR. #6

DESIGN ENGINEER OF RECORD: B. A. DUKE DATE: 5-13

DRAWN BY: H. T. BARBOUR DATE: 6-15-11

CHECKED BY: D. A. GLADDEN DATE: 2-12

14-MAY-2013 09:14
K:\Structures\Plans\Bailey\STR5and6\TBARBOUR\Microstation\RIGHT LANE\superstructure\R2707B_SD_TS.dgn
tbarbour

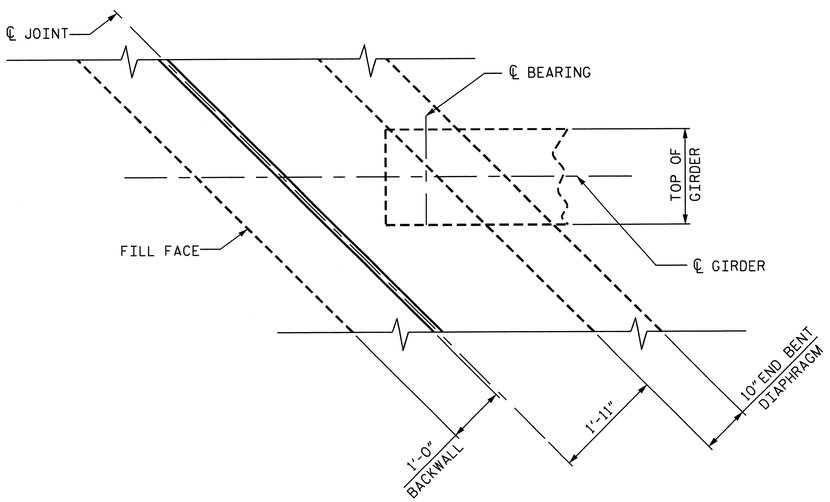

END BENT DIAPHRAGM

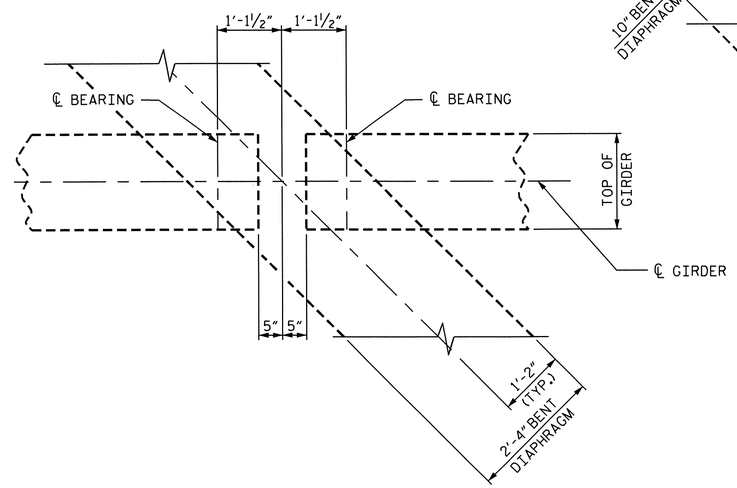

BENTS #1, #3 AND #4 DIAPHRAGMS

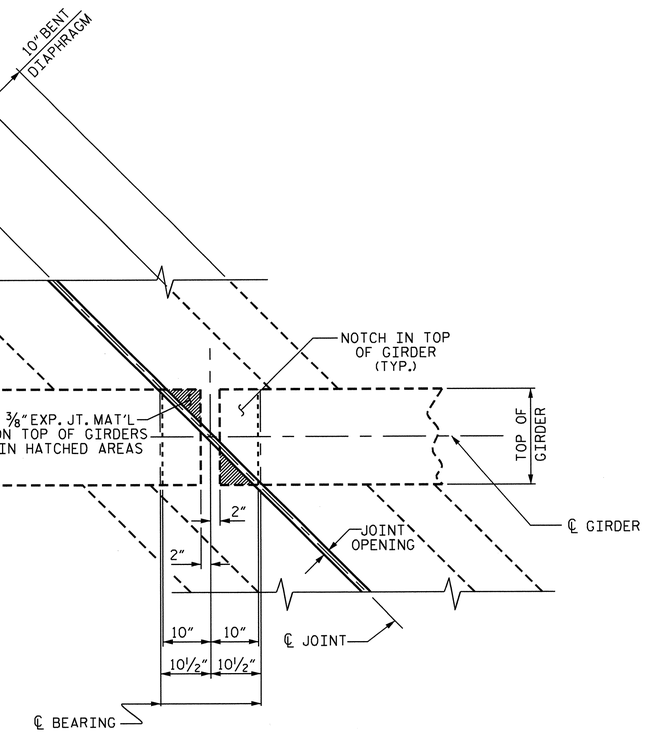

BENT #2 DIAPHRAGM

PLAN

PROJECT NO. R-2707B
CLEVELAND COUNTY
STATION: 340+70.00-L-

SHEET 3 OF 3

STATE OF NORTH CAROLINA
DEPARTMENT OF TRANSPORTATION
RALEIGH

SUPERSTRUCTURE
TYPICAL SECTION
DETAILS
(RIGHT LANE)

NORTH CAROLINA PROFESSIONAL SEAL 15828 ENGINEER DAVID A. GLADDEN KLAPPENBERGER 6-27-2013

REVISIONS						SHEET NO.
NO.	BY:	DATE:	NO.	BY:	DATE:	S-184
1			3			TOTAL SHEETS
2			4			266

STR. #6

DESIGN ENGINEER OF RECORD: B. A. DUKE DATE : 5-13
DRAWN BY : H. T. BARBOUR DATE : 8-05-11
CHECKED BY : D. A. GLADDEN DATE : 2-12

14-MAY-2013 09:14
K:\Structures\Plans\Bailey\STR5and6\TBARBOUR\Microstation\RIGHT LANE\superstructure\R2707B_SD_TS.dgn
tbarbour

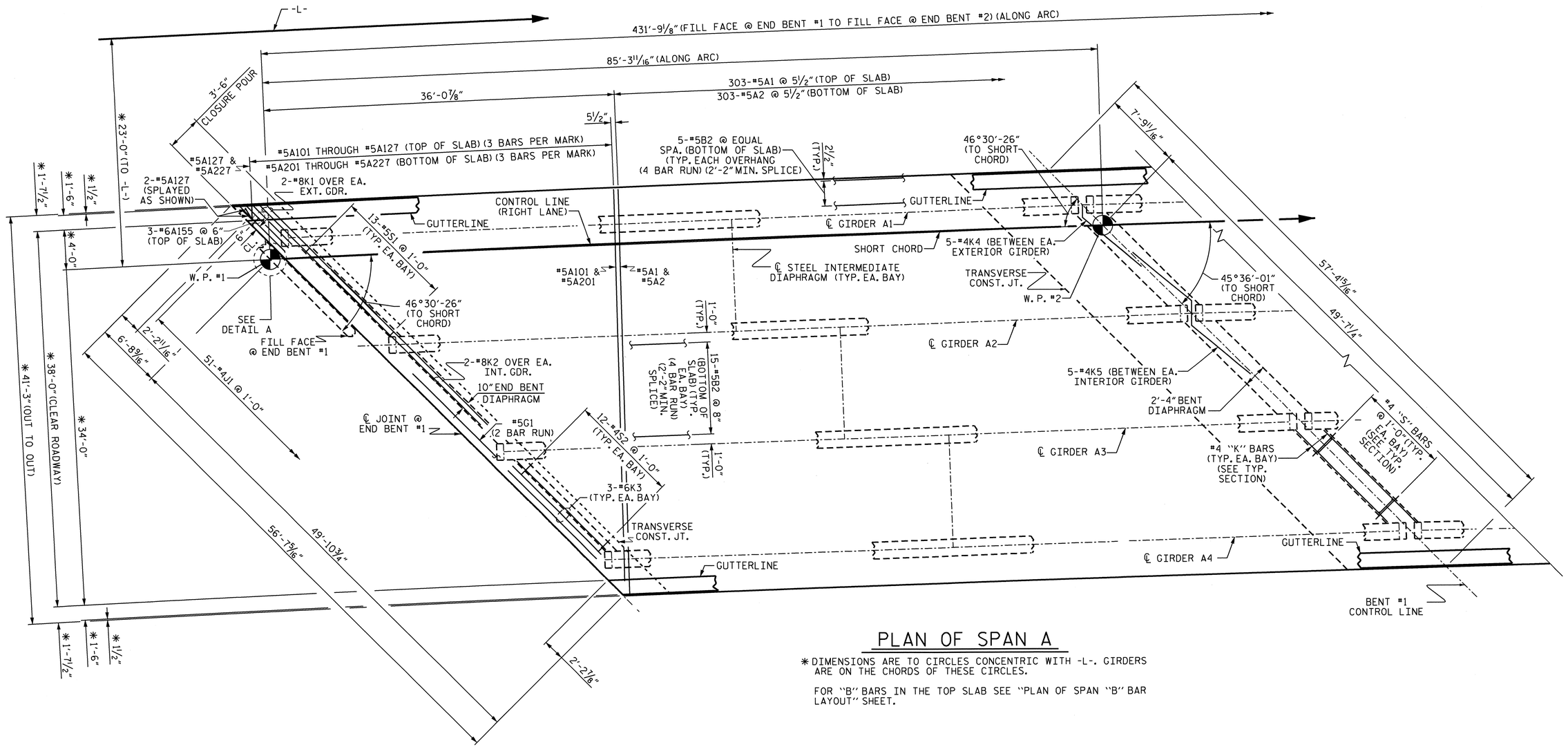

PLAN OF SPAN A

* DIMENSIONS ARE TO CIRCLES CONCENTRIC WITH -L-. GIRDERS ARE ON THE CHORDS OF THESE CIRCLES.

FOR "B" BARS IN THE TOP SLAB SEE "PLAN OF SPAN "B" BAR LAYOUT" SHEET.

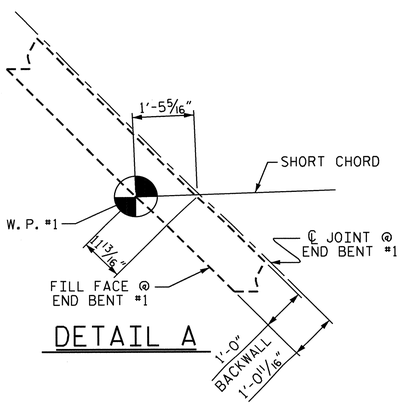

DETAIL A

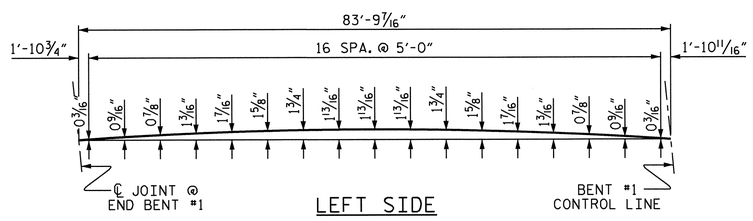

LEFT SIDE

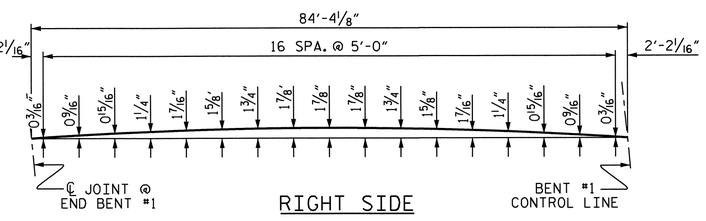

RIGHT SIDE

ARC OFFSETS

PROJECT NO. R-2707B

CLEVELAND COUNTY

STATION: 340+70.00-L-

SHEET 1 OF 5

STATE OF NORTH CAROLINA
DEPARTMENT OF TRANSPORTATION
RALEIGH

SUPERSTRUCTURE PLAN OF SPAN A (RIGHT LANE)

NORTH CAROLINA PROFESSIONAL SEAL 15825 ENGINEER D. K. APPENBACH 6-27-2013

REVISIONS						SHEET NO.
NO.	BY:	DATE:	NO.	BY:	DATE:	S-185
1			3			TOTAL SHEETS
2			4			266

STR. #6

DRAWN BY : H. T. BARBOUR DATE : 8-11-11	DESIGN ENGINEER OF RECORD:
CHECKED BY : D. A. GLADDEN DATE : 2-12	B. A. DUKE DATE : 5-13

24-JUN-2013 14:58
K:\Structures\Plans\Bailey\STR5and6\TBARBOUR\Microstation\RIGHT LANE\superstructure\R2707B_SD_S*.dgn
tbarbour

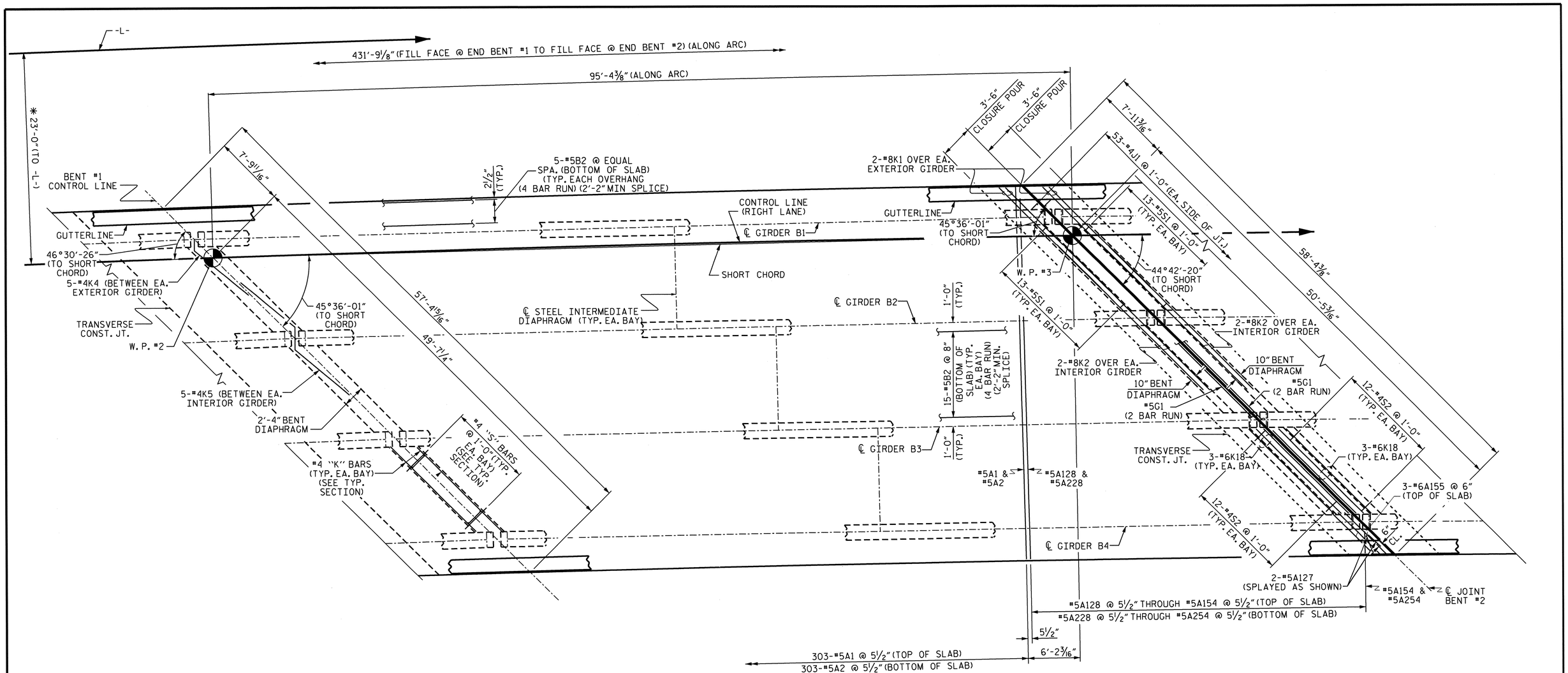

PLAN OF SPAN B

* DIMENSIONS ARE TO CIRCLES CONCENTRIC WITH -L-. GIRDERS ARE ON THE CHORDS OF THESE CIRCLES.

FOR "B" BARS IN THE TOP SLAB SEE "PLAN OF SPAN "B" BAR LAYOUT" SHEET.

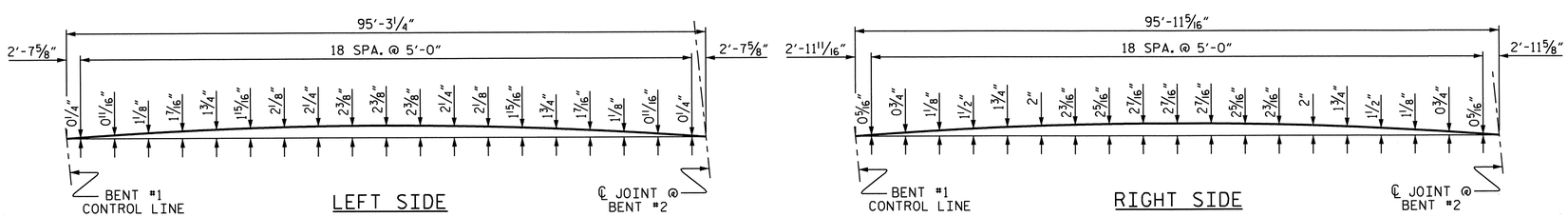

ARC OFFSETS

PROJECT NO. R-2707B
CLEVELAND COUNTY
STATION: 340+70.00-L-

SHEET 2 OF 5

STATE OF NORTH CAROLINA
DEPARTMENT OF TRANSPORTATION
RALEIGH

SUPERSTRUCTURE PLAN OF SPAN B (RIGHT LANE)

NORTH CAROLINA PROFESSIONAL SEAL 15825 ENGINEER BRIAN D. KLAPPENBACH 6-27-2013

REVISIONS						SHEET NO.
NO.	BY:	DATE:	NO.	BY:	DATE:	S-186
1			3			TOTAL SHEETS
2			4			266

STR. #6

DRAWN BY : H. T. BARBOUR DATE : 8-09-11
CHECKED BY : D. A. GLADDEN DATE : 2-12

DESIGN ENGINEER OF RECORD:
B. A. DUKE DATE : 5-13

14-MAY-2013 09:13
K:\Structures\Plans\Bailey\STR5and6\TBARBOUR\Microstation\RIGHT LANE\superstructure\R2707B_SD_S*.dgn
tbarbour

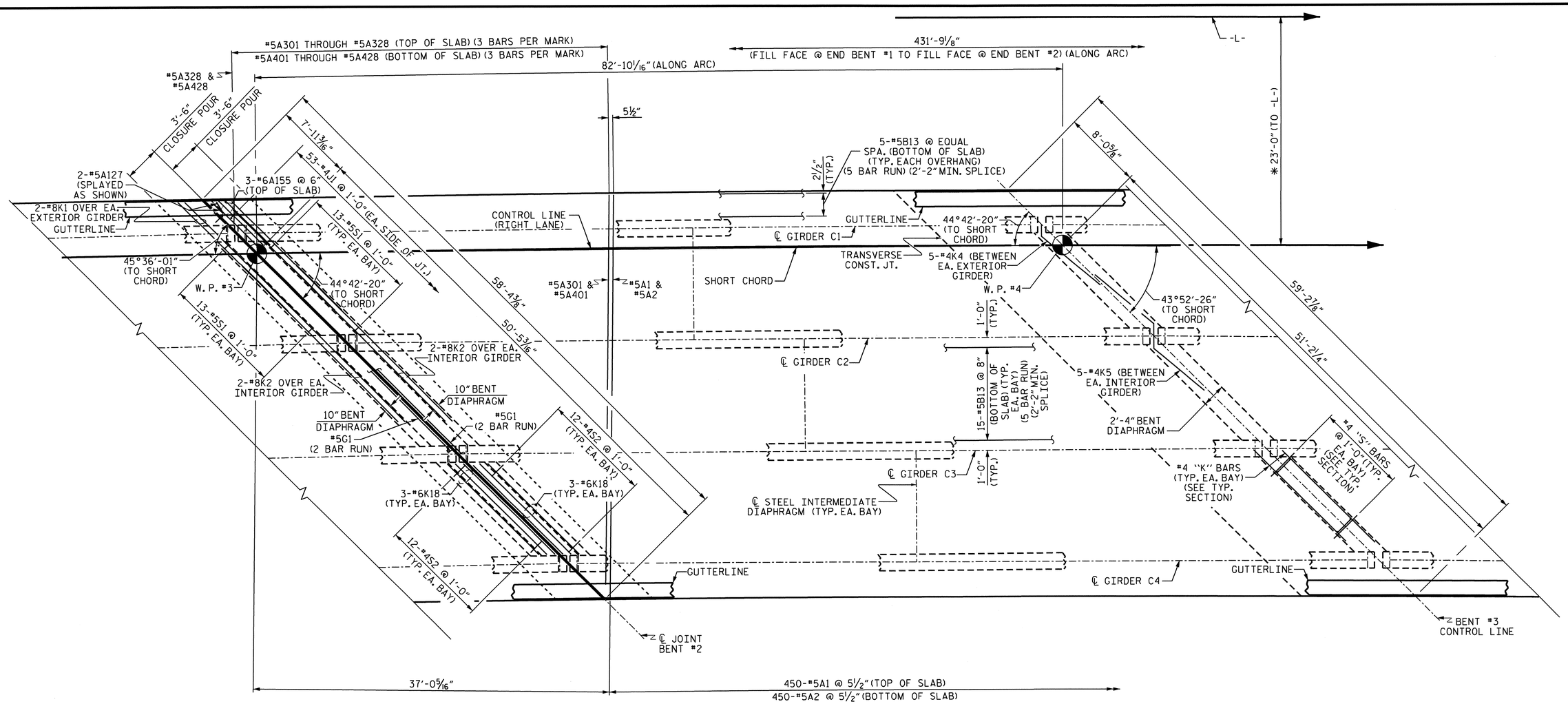

PLAN OF SPAN C

* DIMENSIONS ARE TO CIRCLES CONCENTRIC WITH -L-. GIRDERS ARE ON THE CHORDS OF THESE CIRCLES.

FOR "B" BARS IN THE TOP SLAB SEE "PLAN OF SPAN "B" BAR LAYOUT" SHEET.

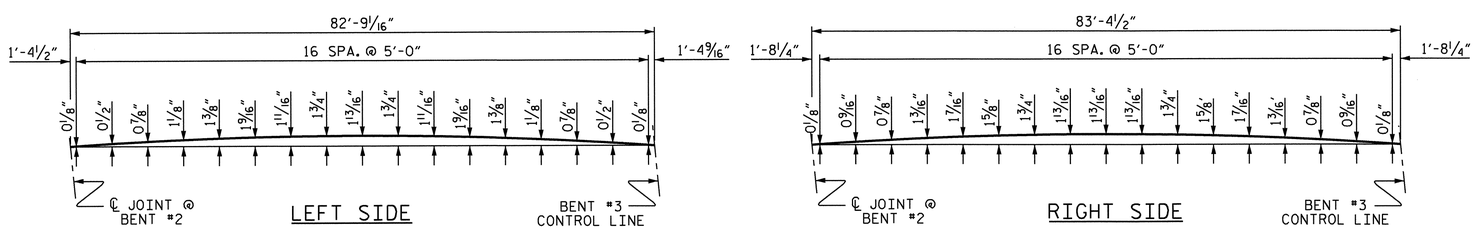

ARC OFFSETS

PROJECT NO. R-2707B

CLEVELAND COUNTY

STATION: 340+70.00-L-

SHEET 3 OF 5

STATE OF NORTH CAROLINA
DEPARTMENT OF TRANSPORTATION
RALEIGH

SUPERSTRUCTURE PLAN OF SPAN C (RIGHT LANE)

NORTH CAROLINA PROFESSIONAL SEAL 15826 ENGINEER BRUCE D. KLAPPENBACH 5-27-2013

REVISIONS						SHEET NO.
NO.	BY:	DATE:	NO.	BY:	DATE:	S-187
1			3			TOTAL SHEETS
2			4			266

STR. #6

DRAWN BY : H. T. BARBOUR DATE : 8-11-11
CHECKED BY : D. A. GLADDEN DATE : 2-12

DESIGN ENGINEER OF RECORD: B. A. DUKE DATE : 5-13

14-MAY-2013 09:13
K:\Structures\Plans\Bailey\STR5and6\TBARBOUR\Microstation\RIGHT LANE\superstructure\R2707B_SD_S*.dgn
tbarbour

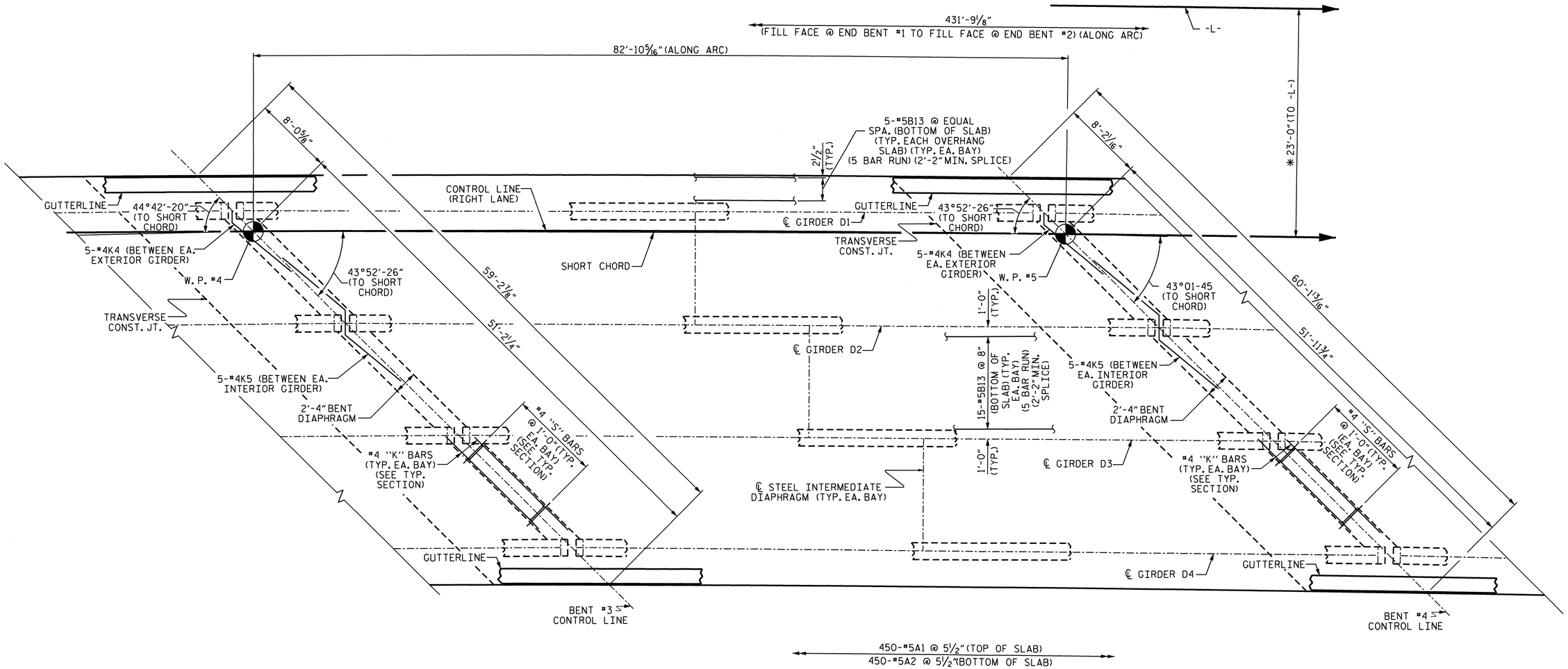

PLAN OF SPAN D

* DIMENSIONS ARE TO CIRCLES CONCENTRIC WITH -L-. GIRDERS ARE ON THE CHORDS OF THESE CIRCLES.

FOR "B" BARS IN THE TOP SLAB SEE "PLAN OF SPAN "B" BAR LAYOUT" SHEET.

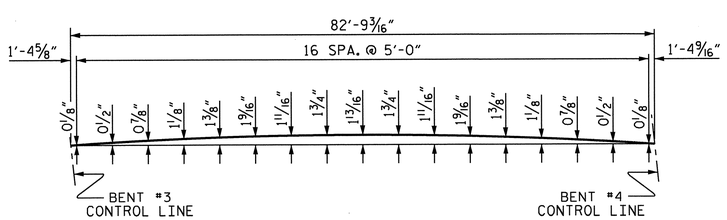

LEFT SIDE

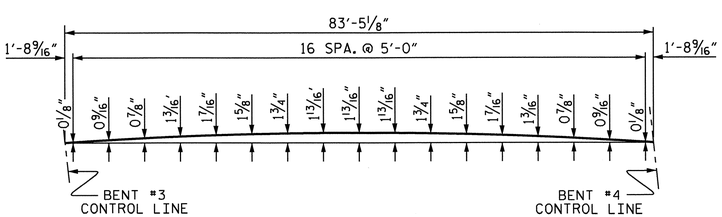

RIGHT SIDE

ARC OFFSETS

PROJECT NO. R-2707B
CLEVELAND COUNTY
STATION: 340+70.00-L-

SHEET 4 OF 5

STATE OF NORTH CAROLINA
DEPARTMENT OF TRANSPORTATION
RALEIGH

SUPERSTRUCTURE PLAN OF SPAN D (RIGHT LANE)

NORTH CAROLINA PROFESSIONAL SEAL 15825 ENGINEER BRUCE D. KLAPPENBACH 12-27-2013

REVISIONS						SHEET NO.
NO.	BY:	DATE:	NO.	BY:	DATE:	S-188
1			3			TOTAL SHEETS
2			4			266

STR. #6

DRAWN BY : H. T. BARBOUR DATE : 8-09-11
CHECKED BY : D. A. GLADDEN DATE : 2-12

DESIGN ENGINEER OF RECORD:
B. A. DUKE DATE : 5-13

14-MAY-2013 09:13
K:\Structures\Plans\Bailey\STR5and6\TBARBOUR\Microstation\RIGHT LANE\superstructure\R2707B_SD_S*.dgn
tbarbour

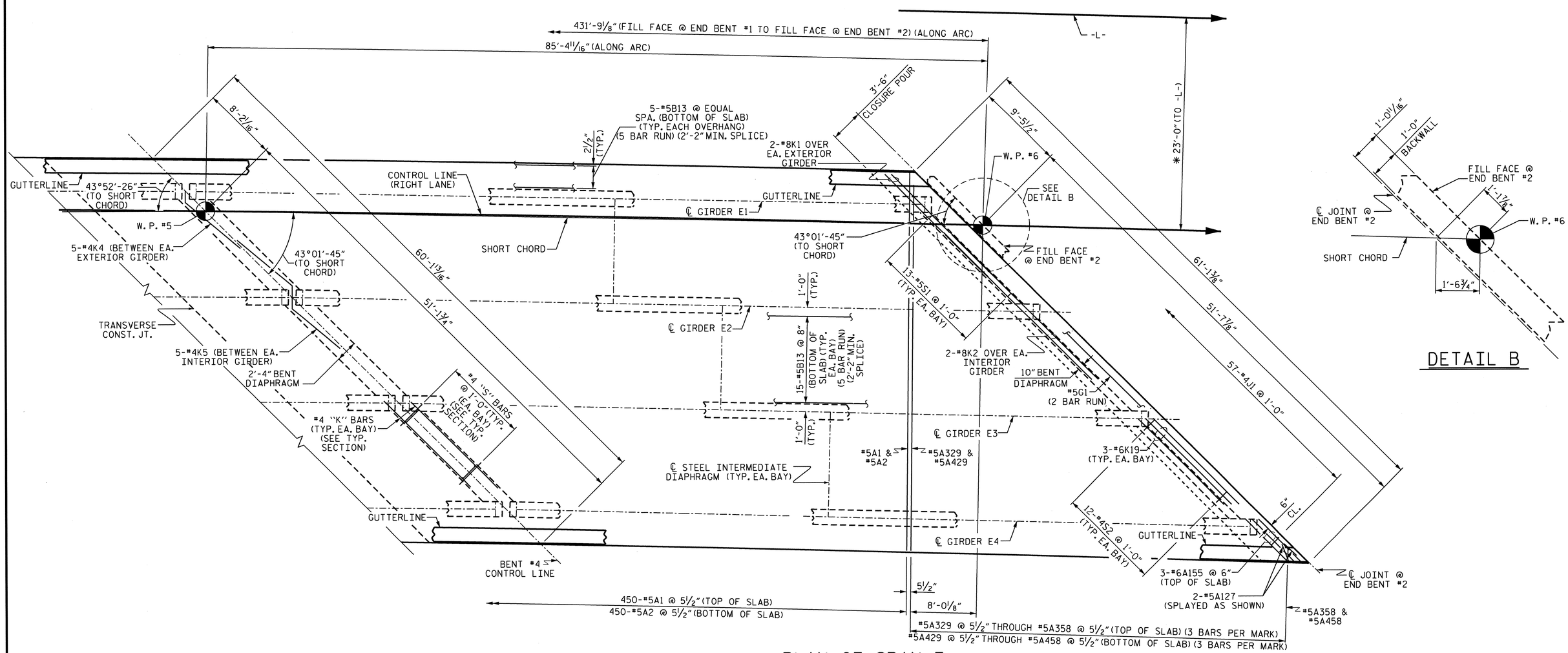

PLAN OF SPAN E

* DIMENSIONS ARE TO CIRCLES CONCENTRIC WITH -L-. GIRDERS ARE ON THE CHORDS OF THESE CIRCLES.

FOR "B" BARS IN THE TOP SLAB SEE "PLAN OF SPAN "B" BAR LAYOUT" SHEET.

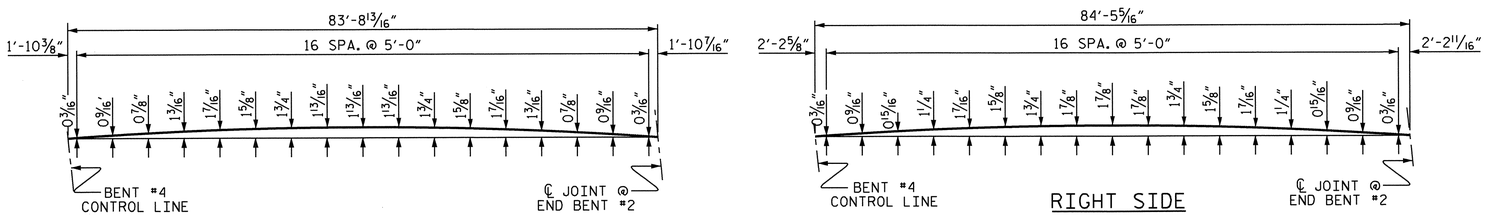

ARC OFFSETS

PROJECT NO. R-2707B
CLEVELAND COUNTY
STATION: 340+70.00-L-

SHEET 5 OF 5

STATE OF NORTH CAROLINA
DEPARTMENT OF TRANSPORTATION
RALEIGH

SUPERSTRUCTURE PLAN OF SPAN E (RIGHT LANE)

NORTH CAROLINA PROFESSIONAL SEAL 15825 ENGINEER D. KLAPPENBACH 6-27-2013

REVISIONS						SHEET NO.
NO.	BY:	DATE:	NO.	BY:	DATE:	S-189
1			3			TOTAL SHEETS
2			4			266

STR. #6

DRAWN BY : H. T. BARBOUR DATE : 8-11-11
CHECKED BY : D. A. GLADDEN A. GLADDEN 2-12

DESIGN ENGINEER OF RECORD:
B. A. DUKE DATE : 5-13

24-JUN-2013 14:59
K:\Structures\Plans\Bailey\STR5and6\TBARBOUR\Microstation\RIGHT LANE\superstructure\R2707B_SD_S*.dgn
tbarbour

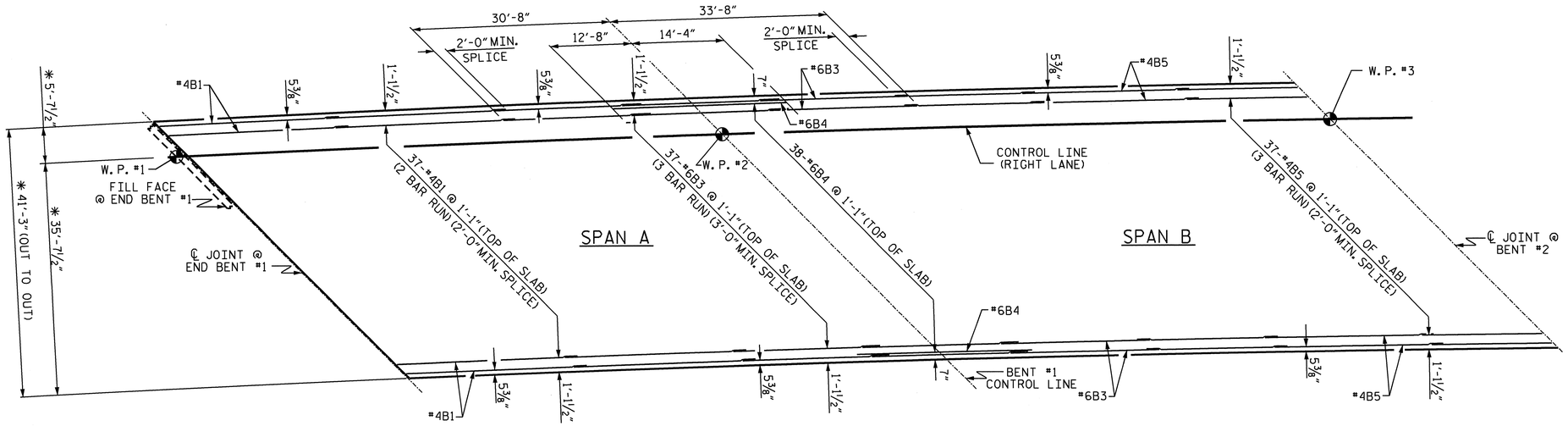

SPANS A & B

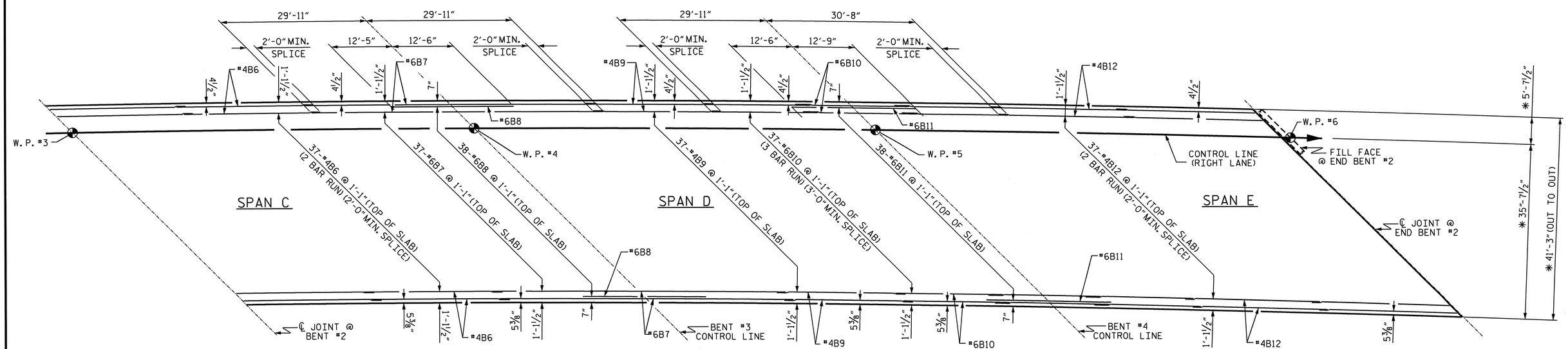

SPANS C, D & E

*DIMENSIONS ARE TO CIRCLES CONCENTRIC WITH -L-. GIRDERS ARE ON THE CHORDS OF THESE CIRCLES.

PROJECT NO. R-2707B

CLEVELAND COUNTY

STATION: 340+70.00-L-

STATE OF NORTH CAROLINA
DEPARTMENT OF TRANSPORTATION
RALEIGH

SUPERSTRUCTURE B BAR LAYOUT (RIGHT LANE)

NORTH CAROLINA PROFESSIONAL SEAL 15825 ENGINEER BRUCE D. KLAPPENBACH
6-27-2012

REVISIONS						SHEET NO.
NO.	BY:	DATE:	NO.	BY:	DATE:	S-190
1			3			TOTAL SHEETS
2			4			266

STR. #6

DESIGN ENGINEER OF RECORD: B. A. DUKE DATE: 5-13

DRAWN BY: H. T. BARBOUR DATE: 8-11-11

CHECKED BY: D. A. GLADDEN DATE: 2-12

14-MAY-2013 09:13
K:\Structures\Plans\Bailey\STR5and6\TBARBOUR\Microstation\RIGHT LANE\superstructure\R2707B_SD_S*.dgn
tbarbour

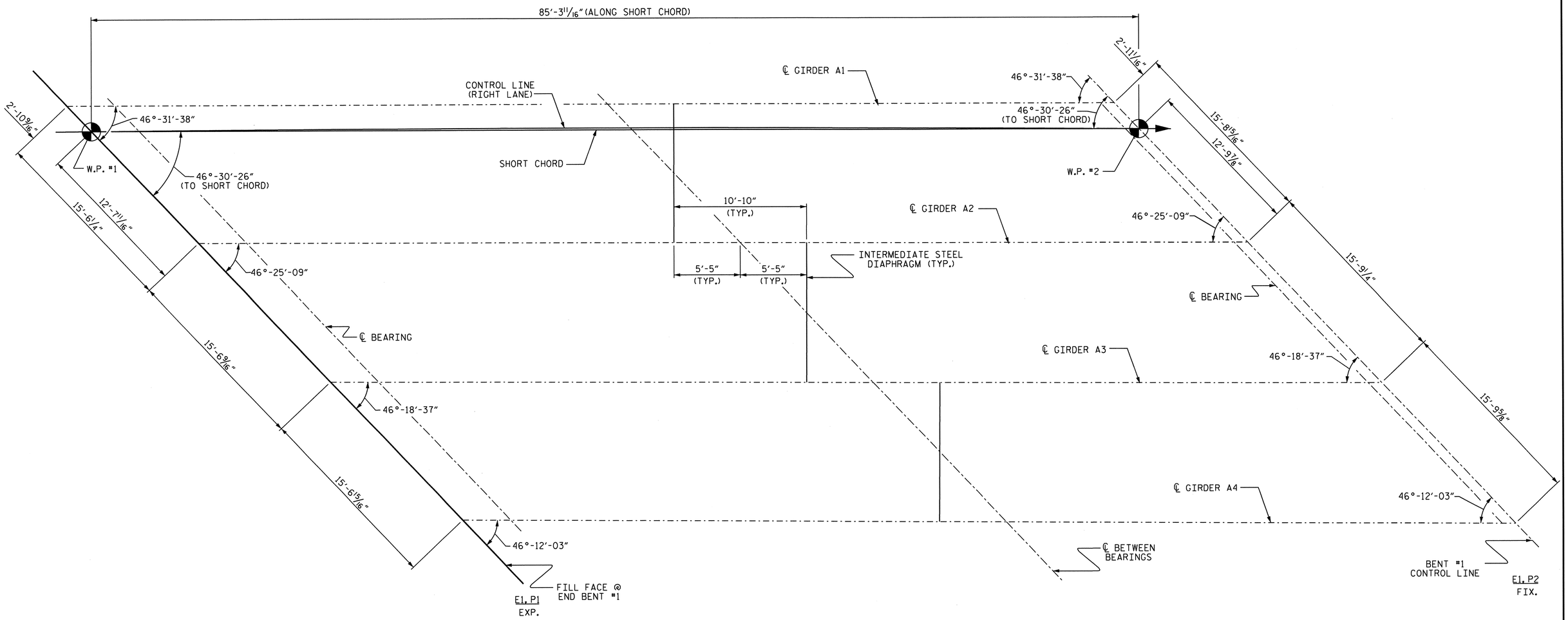

FRAMING PLAN SPAN A

PROJECT NO. R2707B

CLEVELAND COUNTY

STATION: 340+70.00-L-

SHEET 1 OF 5

STATE OF NORTH CAROLINA
DEPARTMENT OF TRANSPORTATION
RALEIGH

SUPERSTRUCTURE FRAMING PLAN (RIGHT LANE)

NORTH CAROLINA PROFESSIONAL SEAL 15825 ENGINEER D. KL APPENDICK
6-27-2013

REVISIONS						SHEET NO.
NO.	BY:	DATE:	NO.	BY:	DATE:	S-191
1			3			TOTAL SHEETS
2			4			266

DESIGN ENGINEER OF RECORD: B. A. DUKE DATE : 5-13

DRAWN BY : H. T. BARBOUR DATE : 8-11-11

CHECKED BY : D. A. GLADDEN DATE : 2-12

14-MAY-2013 09:10
K:\Structures\Plans\Bailey\STR5and6\TBARBOUR\Microstation\RIGHT LANE\superstructure\R2707B_SD_FP.dgn
tbarbour

STR #6

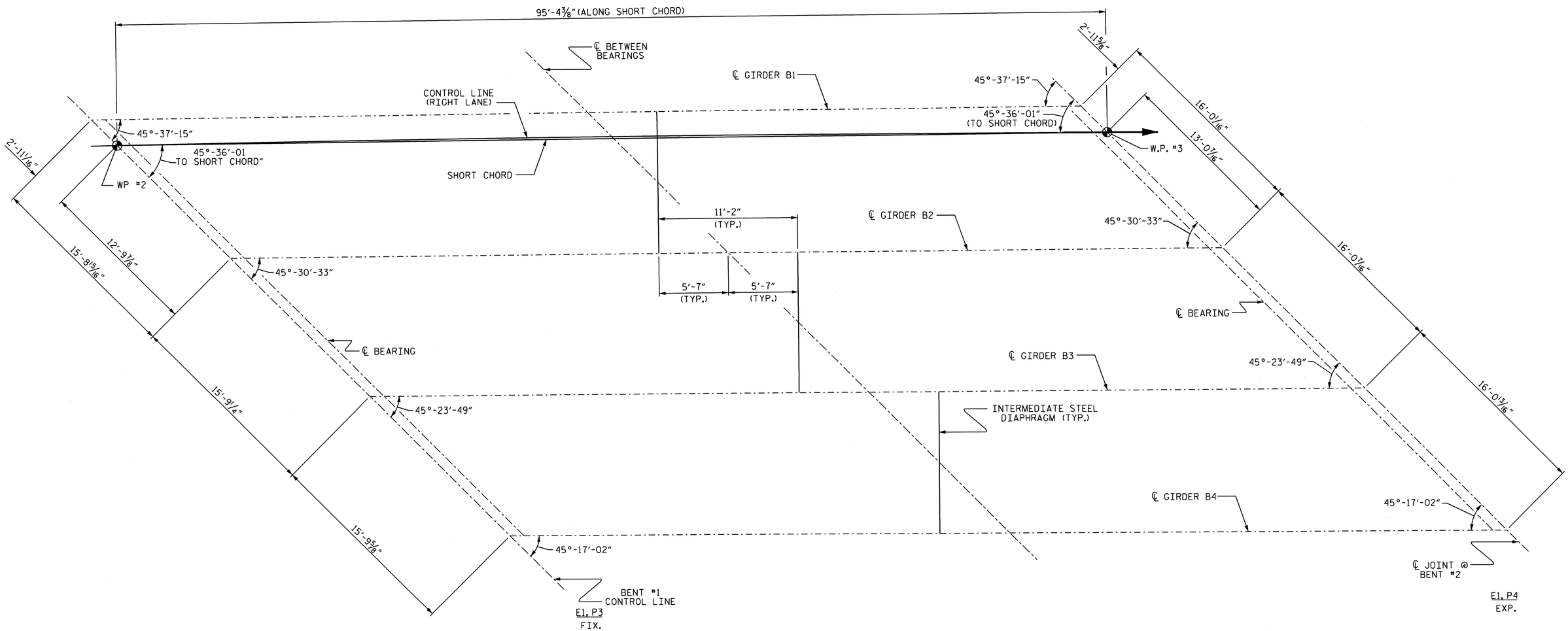

FRAMING PLAN SPAN B

PROJECT NO. R2707B

CLEVELAND COUNTY

STATION: 340+70.00-L-

SHEET 2 OF 5

STATE OF NORTH CAROLINA
DEPARTMENT OF TRANSPORTATION
RALEIGH

SUPERSTRUCTURE FRAMING PLAN (RIGHT LANE)

NORTH CAROLINA PROFESSIONAL SEAL 13825 ENGINEER BRUCE D. KLAPPENBACH
6-27-2013

REVISIONS							SHEET NO.
NO.	BY:	DATE:	NO.	BY:	DATE:		S-192
1			3				TOTAL SHEETS
2			4				266

DESIGN ENGINEER OF RECORD: B. A. DUKE DATE : 5-13

DRAWN BY : H. T. BARBOUR DATE : 8-12-11

CHECKED BY : D. A. GLADDEN DATE : 2-12

14-MAY-2013 09:10
K:\Structures\Plans\Bailey\STR5and6\TBARBOUR\Microstation\RIGHT LANE\superstructure\R2707B_SD_FP.dgn
tbarbour

STR #6

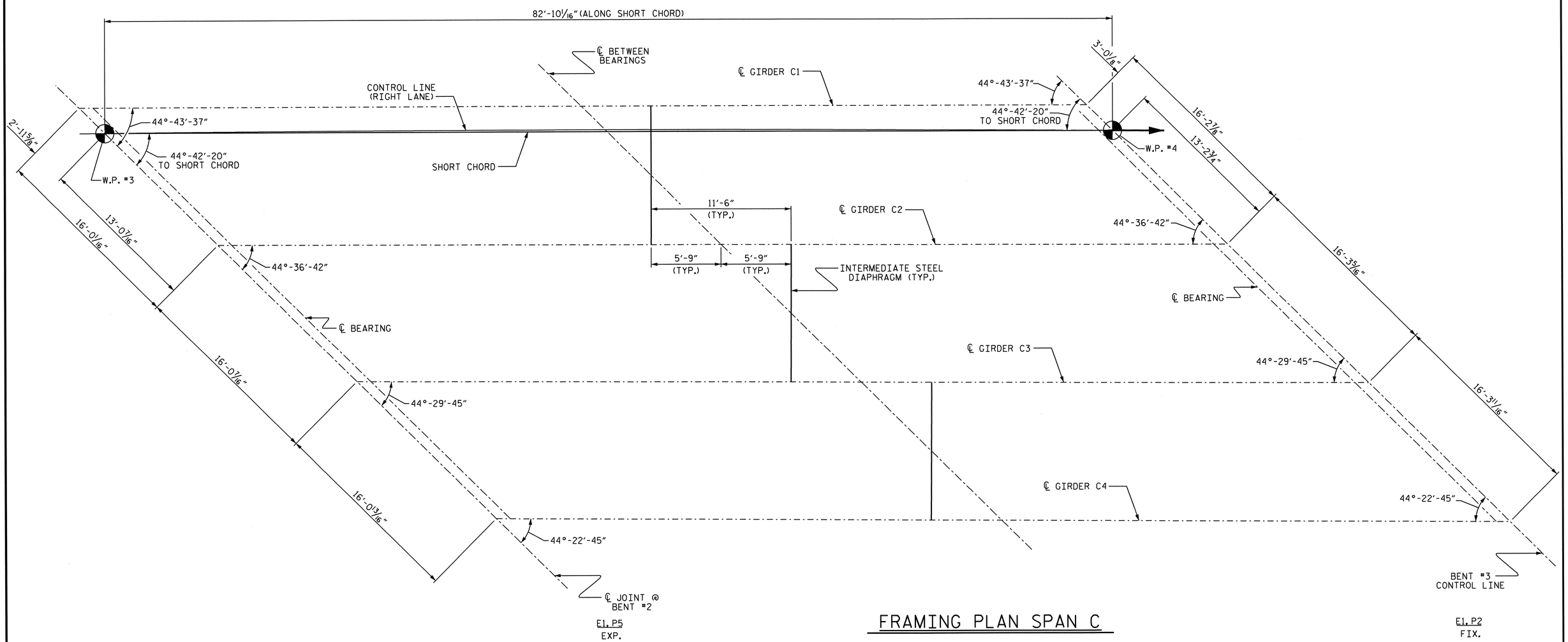

FRAMING PLAN SPAN C

PROJECT NO. R2707B

CLEVELAND COUNTY

STATION: 340+70.00-L-

SHEET 3 OF 5

STATE OF NORTH CAROLINA
DEPARTMENT OF TRANSPORTATION
RALEIGH

SUPERSTRUCTURE FRAMING PLAN (RIGHT LANE)

NORTH CAROLINA PROFESSIONAL SEAL 15825 ENGINEER BRIAN D. KLAPPERICH
6-27-2013

REVISIONS						SHEET NO.
NO.	BY:	DATE:	NO.	BY:	DATE:	S-193
1			3			TOTAL SHEETS
2			4			266

DESIGN ENGINEER OF RECORD: B. A. DUKE DATE: 5-13

DRAWN BY: H. T. BARBOUR DATE: 7-13-11

CHECKED BY: D. A. GLADDEN DATE: 2-12

14-MAY-2013 09:10
K:\Structures\Plans\Bolley\STR5and6\TBARBOUR\Microstation\RIGHT LANE\superstructure\R2707B_SD_FP.dgn
tbarbour

STR #6

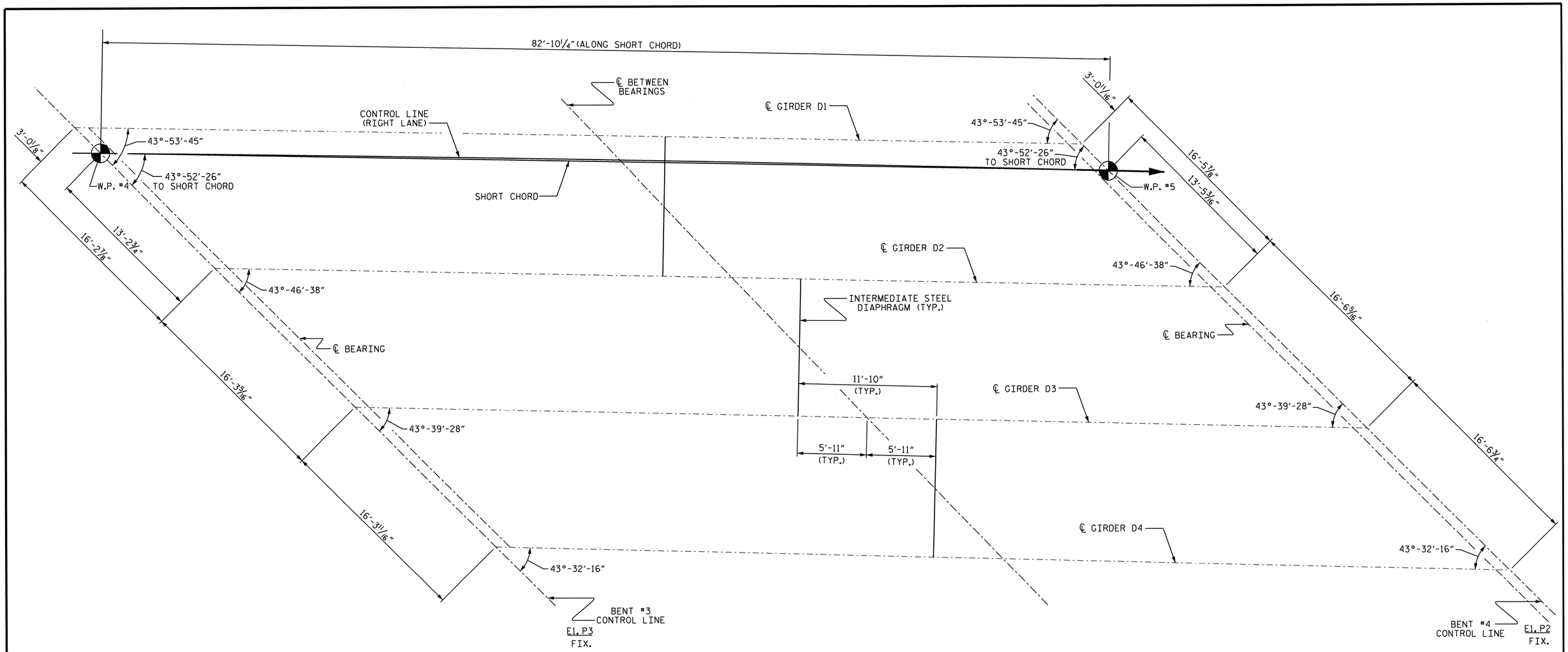

FRAMING PLAN SPAN D

PROJECT NO. R2707B

CLEVELAND COUNTY

STATION: 340+70.00-L-

SHEET 4 OF 5

STATE OF NORTH CAROLINA
DEPARTMENT OF TRANSPORTATION
RALEIGH

SUPERSTRUCTURE FRAMING PLAN (RIGHT LANE)

NORTH CAROLINA PROFESSIONAL SEAL 15828 ENGINEER BRUCE D. KLAPPENBACH
6-27-2013

REVISIONS						SHEET NO.
NO.	BY:	DATE:	NO.	BY:	DATE:	S-194
1			3			TOTAL SHEETS
2			4			266

DESIGN ENGINEER OF RECORD: B. A. DUKE DATE : 5-13

DRAWN BY : H. T. BARBOUR DATE : 8-12-11

CHECKED BY : D. A. GLADDEN DATE : 2-12

STR #6

14-MAY-2013 09:10
K:\Structures\Plans\Bailey\STR5and6\TBARBOUR\Microstation\RIGHT LANE\superstructure\R2707B_SD_FP.dgn
tbarbour

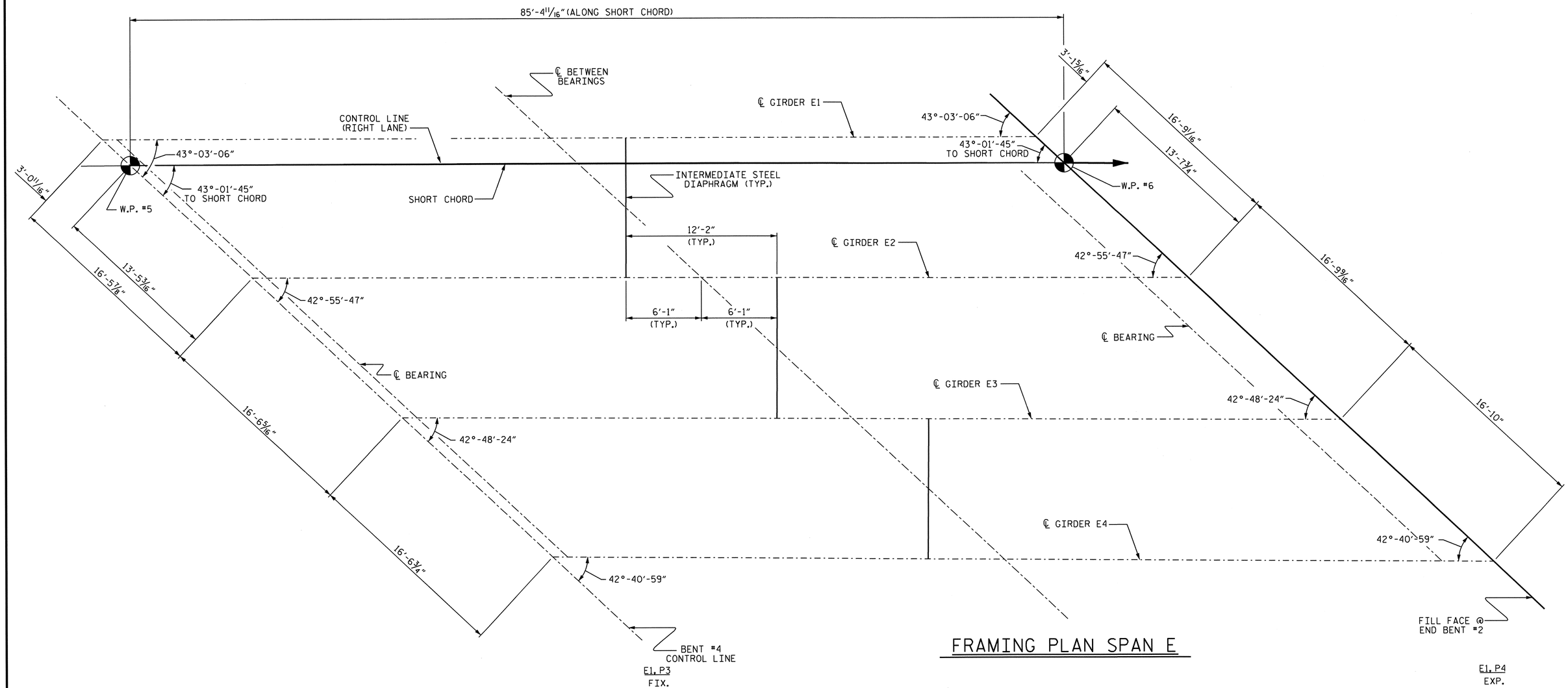

FRAMING PLAN SPAN E

PROJECT NO. R2707B

CLEVELAND COUNTY

STATION: 340+70.00-L-

SHEET 5 OF 5

STATE OF NORTH CAROLINA
DEPARTMENT OF TRANSPORTATION
RALEIGH

SUPERSTRUCTURE FRAMING PLAN (RIGHT LANE)

NORTH CAROLINA PROFESSIONAL SEAL 15825 ENGINEER BRUCE D. KLAPPENBACH
6-27-2013

REVISIONS						SHEET NO.
NO.	BY:	DATE:	NO.	BY:	DATE:	S-195
1			3			TOTAL SHEETS
2			4			266

DESIGN ENGINEER OF RECORD: B. A. DUKE DATE : 5-13

DRAWN BY : H. T. BARBOUR DATE : 8-12-11

CHECKED BY : D. A. GLADDEN DATE : 2-12

14-MAY-2013 09:10
K:\Structures\Plans\Bailey\STR5and6\TBARBOUR\Microstation\RIGHT LANE\superstructure\R2707B_SD_FP.dgn
tbarbour

STR #6

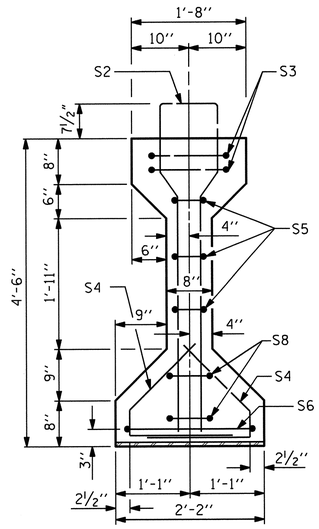

SECTION A-A

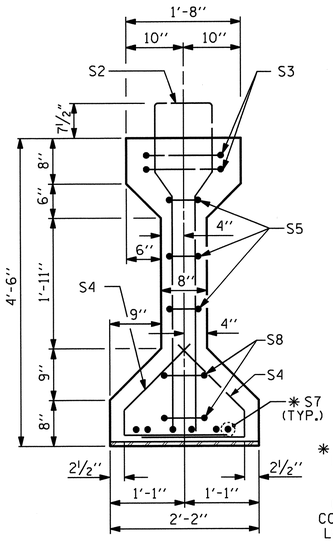

SECTION B-B

✱ FOR S7 BARS, SEE DETAIL "A" OF PRESTRESSED CONCRETE GIRDER CONTINUOUS FOR LIVE LOAD DETAILS SHEET

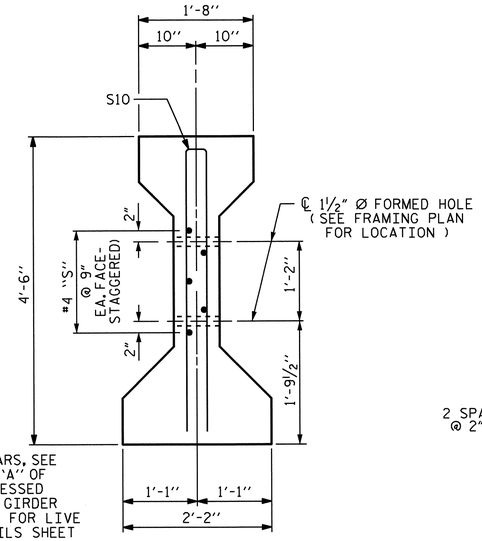

SECTION C-C

(S1 BARS NOT SHOWN)

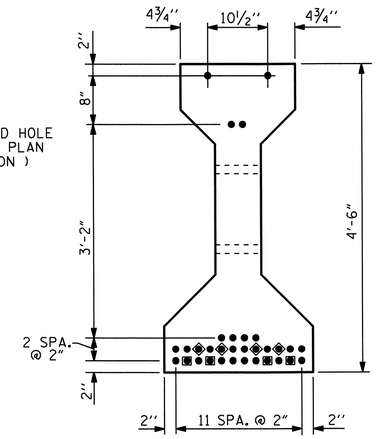

AT END & ℄ OF GIRDER

0.6" Ø LOW RELAXATION STRAND LAYOUT

	GIRDER DIMENSIONS		
	DIM. A	DIM. B	DIM. C
GIRDER #1	81'-8"	40'-10"	1'-0½"
GIRDER #2	81'-9¾"	40'-10⅞"	1'-1⅜"
GIRDER #3	81'-11½"	40'-11¾"	1'-2¼"
GIRDER #4	82'-1⅜"	41'-0 11/16"	1'-3 3/16"

DEBONDING LEGEND

- ● FULLY BONDED STRANDS
- ■ STRANDS DEBONDED FOR 10'-8½" FROM ENDS OF GIRDER
- ◆ STRANDS DEBONDED FOR 8'-8½" FROM ENDS OF GIRDER

0.6" Ø L. R. GRADE 270 STRANDS		
AREA (SQUARE INCHES)	ULTIMATE STRENGTH (LBS. PER STRAND)	APPLIED PRESTRESS (LBS. PER STRAND)
0.217	58,600	43,950

REINFORCING STEEL FOR ONE GIRDER

	BAR	NUMBER	SIZE	TYPE	LENGTH	WEIGHT
	S1	105	#5	1	10'-11"	1196
	S2	12	#6	1	10'-11"	197
	S3	4	#4	2	9'-1"	24
	S4	68	#4	3	3'-5"	155
	S5	6	#4	2	8'-5"	34
	S6	1	#4	2	9'-11"	7
	✱ S7	6	#5	STR	3'-8"	23
	S8	4	#4	2	8'-7"	23
	S9	1	#3	STR	1'-10"	1
EXTERIOR GDR.	S10	2	#5	2	8'-8"	18
INTERIOR GDR.	S10	4	#5	2	8'-8"	36
EXTERIOR GDR.	S11	5	#4	STR	7'-0"	23
INTERIOR GDR.	S12	5	#4	STR	17'-10"	60

✱ NOTE: S7 BARS SHALL BE BENT BEFORE SHIPMENT. HEAT BENDING SHALL NOT BE ALLOWED.

BAR TYPES

ALL BAR DIMENSIONS ARE OUT-TO-OUT

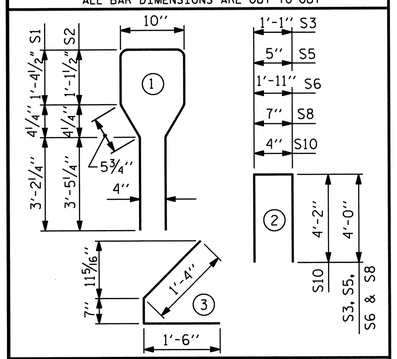

QUANTITIES FOR ONE GIRDER

	REINFORCING STEEL	6000 PSI CONCRETE	0.6" Ø L. R. STRANDS
	LB.	C.Y.	No.
GIRDER #1	1701	16.6	32
GIRDER #2	1756	16.6	32
GIRDER #3	1756	16.6	32
GIRDER #4	1701	16.7	32
TOTAL	6914	66.5	128

GIRDERS REQUIRED

SPAN A	NUMBER	LENGTH
GIRDER #1	1	81'-8"
GIRDER #2	1	81'-9¾"
GIRDER #3	1	81'-11½"
GIRDER #4	1	82'-1⅜"
TOTAL	4	327'-6⅝"

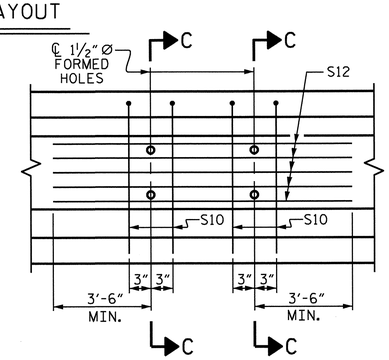

PARTIAL ELEVATION

SHOWING INTERMEDIATE DIAPHRAGM REINFORCING STEEL FOR INTERIOR GIRDERS

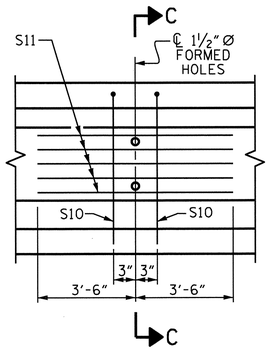

PARTIAL ELEVATION

SHOWING INTERMEDIATE DIAPHRAGM REINFORCING STEEL FOR EXTERIOR GIRDER

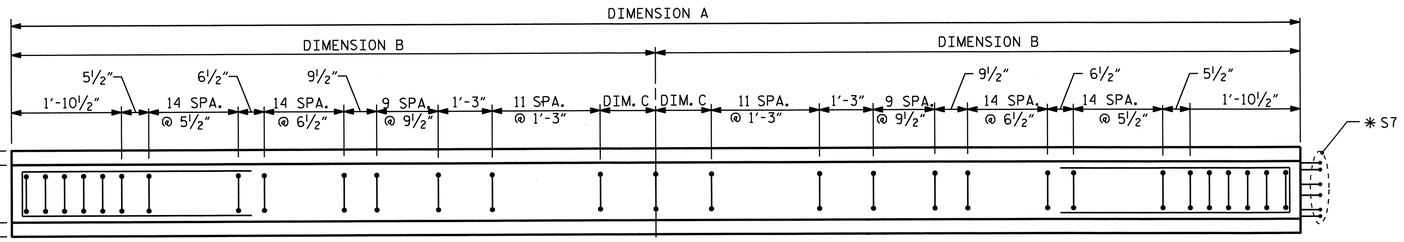

PLAN OF GIRDER

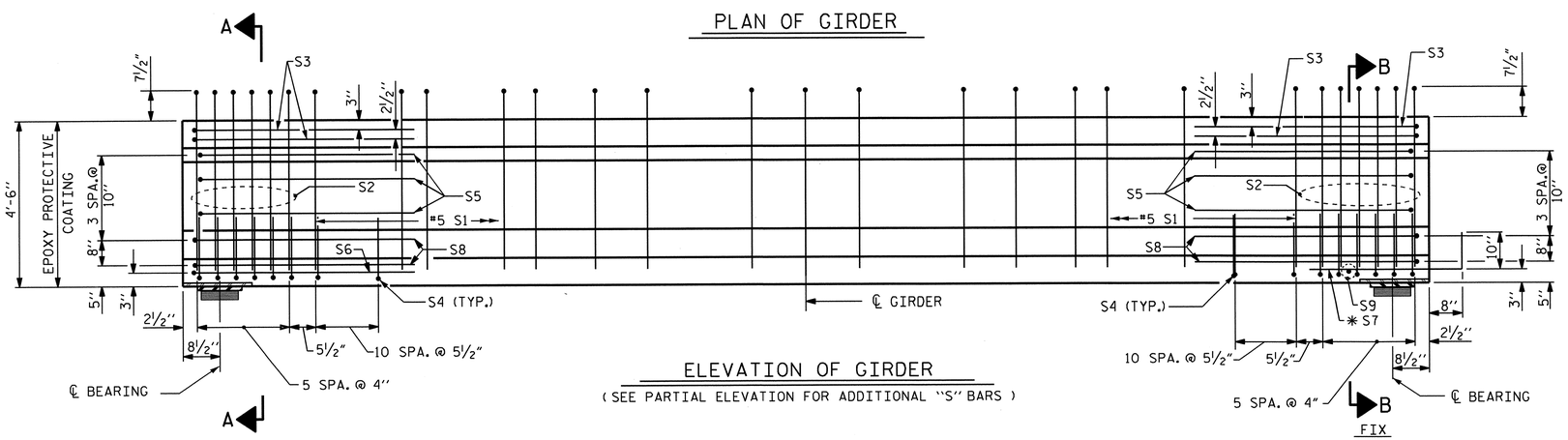

ELEVATION OF GIRDER

(SEE PARTIAL ELEVATION FOR ADDITIONAL "S" BARS)

PROJECT NO. R-2707B

CLEVELAND COUNTY

STATION: 340+70.00-L-

SHEET 1 OF 6

STATE OF NORTH CAROLINA
DEPARTMENT OF TRANSPORTATION
RALEIGH

AASHTO TYPE IV PRESTRESSED CONCRETE GIRDER CONTINUOUS FOR LIVE LOAD (RIGHT LANE) (SPAN A)

NORTH CAROLINA PROFESSIONAL SEAL 15825 ENGINEER BRUCE D. KLAPPENBACH
12-27-2013

ASSEMBLED BY : H. T. BARBOUR	DATE : 8-16-11
CHECKED BY : D. A. GLADDEN	DATE : 2-12

DRAWN BY : ELR 8/91	REV. 7/17/98 RWW/LES
CHECKED BY : GRP 8/91	REV. 10/17/00R RWW/LES
	REV. 5/1/06R TLA/GM

DESIGN ENGINEER OF RECORD: B. A. DUKE DATE : 5-13

REVISIONS								SHEET NO. S-196
NO.	BY:	DATE:	NO.	BY:	DATE:			
1			3					TOTAL SHEETS 266
2			4					

STR. #6

STD. NO. PCG6 (Sht. 1)

14-MAY-2013 09:09
K:\Structures\Plans\Bailey\STR5and6\TBARBOUR\Microstation\RIGHT LANE\superstructure\R2707B_SD_G*.dgn
tbarbour

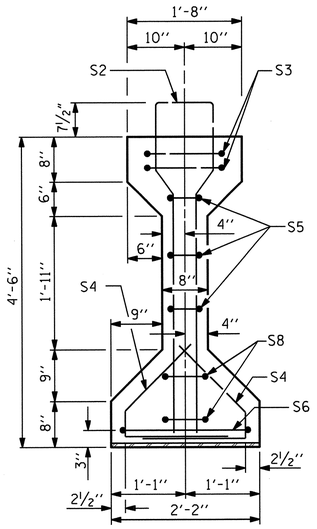

SECTION A-A

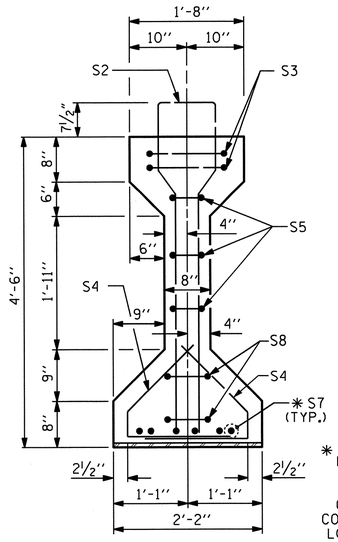

SECTION B-B

* FOR S7 BARS, SEE DETAIL "A" OF PRESTRESSED CONCRETE GIRDER CONTINUOUS FOR LIVE LOAD DETAILS SHEET

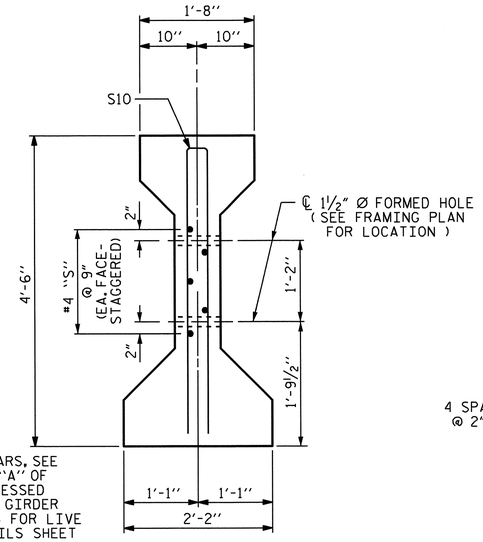

SECTION C-C

(S1 BARS NOT SHOWN)

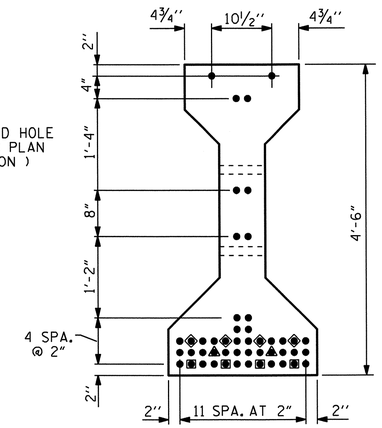

AT END & ℄ OF GIRDER

0.6" Ø LOW RELAXATION STRAND LAYOUT

	GIRDER DIMENSIONS		
	DIM. A	DIM. B	DIM. C
GIRDER #1	94'-9"	47'-4½"	11¼"
GIRDER #2	94'-11⅛"	47'-5 9/16"	1'-0 5/16"
GIRDER #3	95'-1⅜"	47'-6 11/16"	1'-1 7/16"
GIRDER #4	95'-3⅝"	47'-7 13/16"	1'-2 9/16"

DEBONDING LEGEND

- ● FULLY BONDED STRANDS
- ■ STRANDS DEBONDED FOR 14'-8½" FROM ENDS OF GIRDER
- ▲ STRANDS DEBONDED FOR 12'-8½" FROM ENDS OF GIRDER
- ◆ STRANDS DEBONDED FOR 10'-8½" FROM ENDS OF GIRDER

0.6" Ø L. R. GRADE 270 STRANDS

AREA (SQUARE INCHES)	ULTIMATE STRENGTH (LBS. PER STRAND)	APPLIED PRESTRESS (LBS. PER STRAND)
0.217	58,600	43,950

REINFORCING STEEL FOR ONE GIRDER

	BAR	NUMBER	SIZE	TYPE	LENGTH	WEIGHT
	S1	141	#5	1	10'-11"	2312
	S2	11	#6	1	10'-11"	180
	S3	4	#4	2	9'-1"	24
	S4	76	#4	3	3'-5"	173
	S5	6	#4	2	8'-5"	34
	S6	1	#4	2	9'-11"	7
	* S7	6	#5	STR	3'-8"	23
	S8	4	#4	2	8'-7"	23
	S9	1	#3	STR	1'-10"	1
EXTERIOR GDR.	S10	2	#5	2	8'-8"	18
INTERIOR GDR.	S10	4	#5	2	8'-8"	36
EXTERIOR GDR.	S11	5	#4	STR	7'-0"	23
INTERIOR GDR.	S12	5	#4	STR	18'-2"	61
	S13	6	#6	STR	3'-9"	34

* NOTE: S7 BARS SHALL BE BENT BEFORE SHIPMENT. HEAT BENDING SHALL NOT BE ALLOWED.

BAR TYPES

ALL BAR DIMENSIONS ARE OUT-TO-OUT

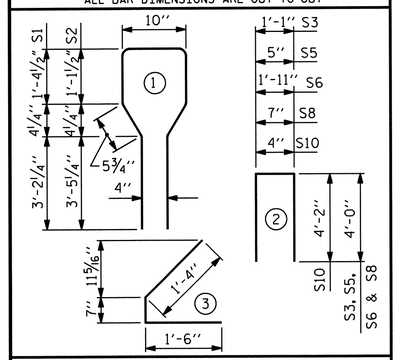

QUANTITIES FOR ONE GIRDER

	REINFORCING STEEL LB.	8000 PSI CONCRETE C.Y.	0.6" Ø L. R. STRANDS No.
GIRDER #1	2852	19.2	48
GIRDER #2	2908	19.3	48
GIRDER #3	2908	19.3	48
GIRDER #4	2852	19.3	48
TOTAL	11520	77.1	192

GIRDERS REQUIRED

SPAN B	NUMBER	LENGTH
GIRDER #1	1	94'-9"
GIRDER #2	1	94'-11⅛"
GIRDER #3	1	95'-1⅜"
GIRDER #4	1	95'-3⅝"
TOTAL	4	380'-1⅛"

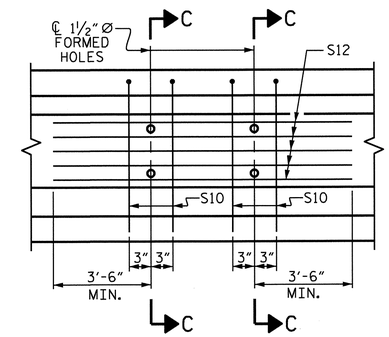

PARTIAL ELEVATION

SHOWING INTERMEDIATE DIAPHRAGM REINFORCING STEEL FOR INTERIOR GIRDERS

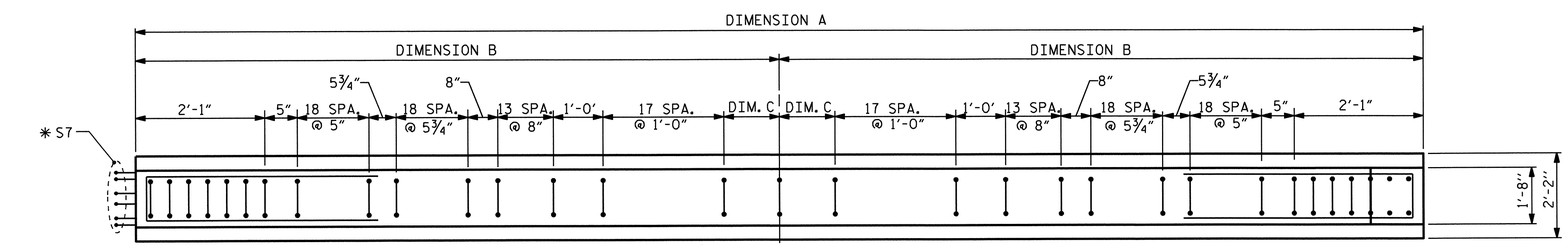

PLAN OF GIRDER

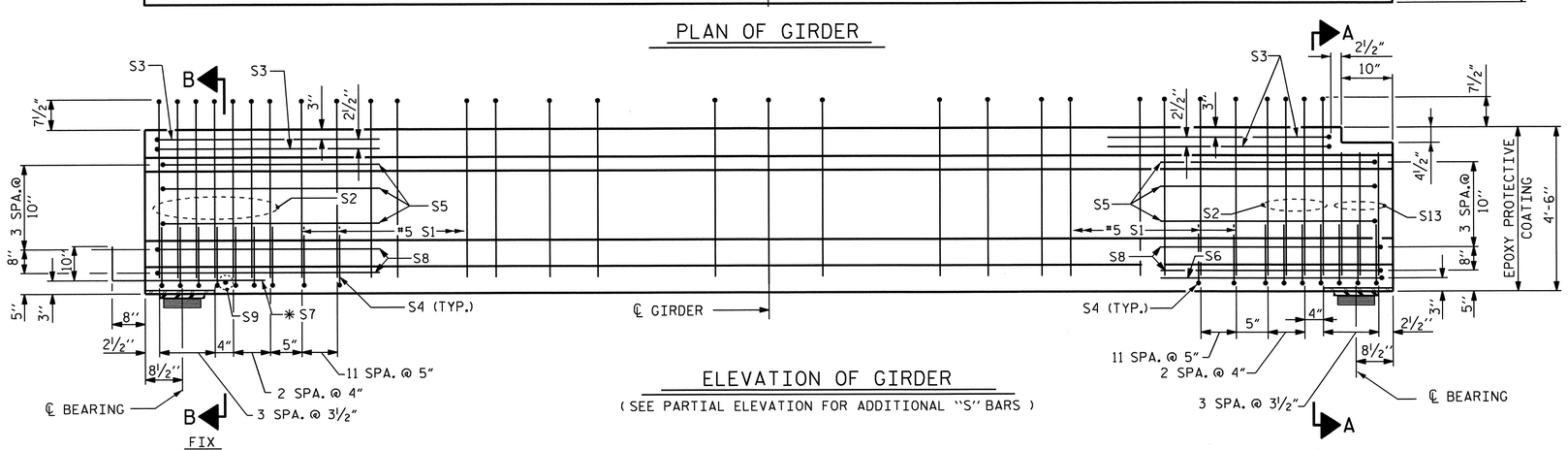

ELEVATION OF GIRDER

(SEE PARTIAL ELEVATION FOR ADDITIONAL "S" BARS)

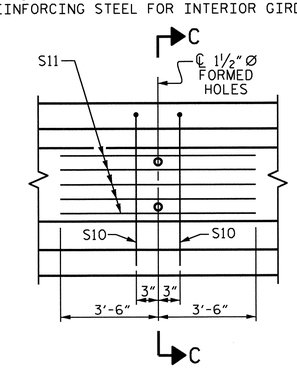

PARTIAL ELEVATION

SHOWING INTERMEDIATE DIAPHRAGM REINFORCING STEEL FOR EXTERIOR GIRDER

PROJECT NO. R-2707B

CLEVELAND COUNTY

STATION: 340+70.00-L-

SHEET 2 OF 6

STATE OF NORTH CAROLINA
DEPARTMENT OF TRANSPORTATION
RALEIGH

AASHTO TYPE IV PRESTRESSED CONCRETE GIRDER CONTINUOUS FOR LIVE LOAD (RIGHT LANE) (SPAN B)

NORTH CAROLINA PROFESSIONAL SEAL 15825 ENGINEER BRUCE A. KLAPPENBACH
6-27-2013

ASSEMBLED BY :	H. T. BARBOUR	DATE :	7-15-11	REVISIONS				SHEET NO. S-197
CHECKED BY :	D. A. GLADDEN	DATE :	2-12	NO.	BY:	DATE:	NO. BY: DATE:	
DRAWN BY : ELR 8/91	REV. 7/17/98	RWW/LES	DESIGN ENGINEER OF RECORD:	1			3	TOTAL SHEETS 266
CHECKED BY : GRP 8/91	REV. 10/17/00R	RWW/LES	B. A. DUKE DATE : 5-13	2			4	
	REV. 5/1/06R	TLA/GM						

24-JUN-2013 15:01
K:\Structures\Plans\Bailey\STR5and6\TBARBOUR\Microstation\RIGHT LANE\superstructure\R2707B_SD_G*.dgn
tbarbour

STR. #6

STD. NO. PCG6 (Sht. 1)

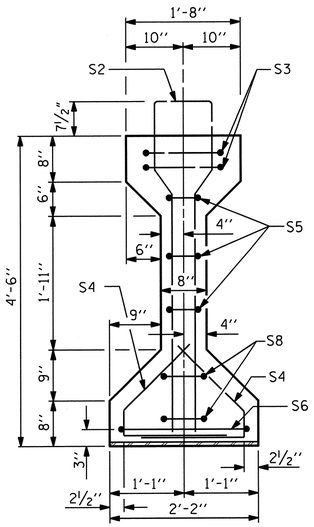

SECTION A-A

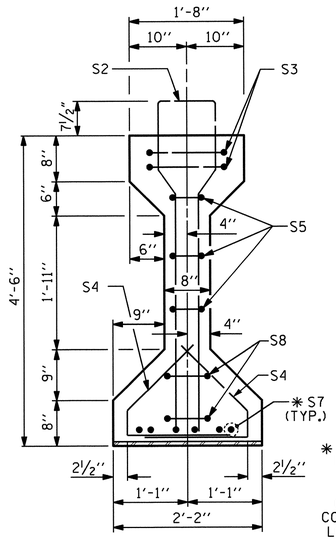

SECTION B-B

✱ FOR S7 BARS, SEE DETAIL "A" OF PRESTRESSED CONCRETE GIRDER CONTINUOUS FOR LIVE LOAD DETAILS SHEET

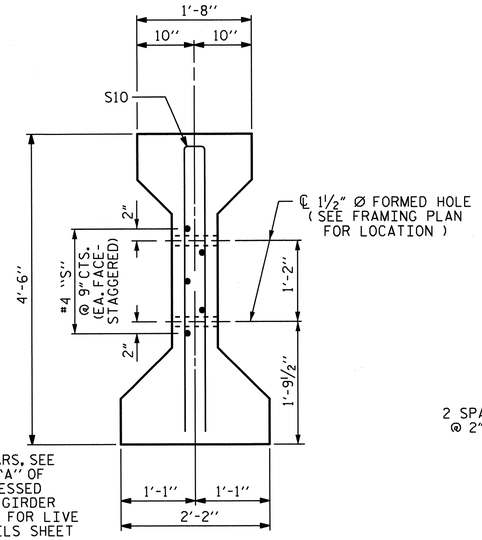

SECTION C-C

(S1 BARS NOT SHOWN)

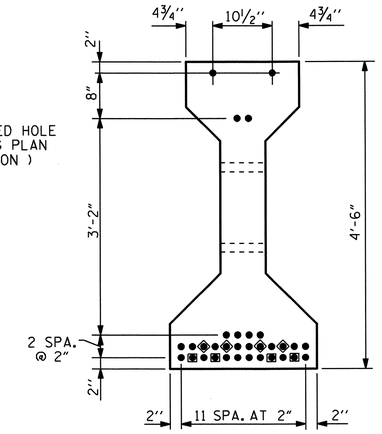

AT END & ℄ OF GIRDER

0.6" Ø LOW RELAXATION STRAND LAYOUT

	GIRDER DIMENSIONS		
	DIM. A	DIM. B	DIM. C
GIRDER #1	82'-2¾"	41'-1⅜"	1'-3⅞"
GIRDER #2	82'-4¾"	41'-2⅜"	1'-4⅞"
GIRDER #3	82'-6¾"	41'-3⅜"	1'-5⅞"
GIRDER #4	82'-8⅞"	41'-4 7/16"	1'-6 15/16"

DEBONDING LEGEND

- ● FULLY BONDED STRANDS
- ■ STRANDS DEBONDED FOR 10'-8½" FROM ENDS OF GIRDER
- ◆ STRANDS DEBONDED FOR 8'-8½" FROM ENDS OF GIRDER

0.6" Ø L. R. GRADE 270 STRANDS		
AREA (SQUARE INCHES)	ULTIMATE STRENGTH (LBS. PER STRAND)	APPLIED PRESTRESS (LBS. PER STRAND)
0.217	58,600	43,950

REINFORCING STEEL FOR ONE GIRDER

	BAR	NUMBER	SIZE	TYPE	LENGTH	WEIGHT
	S1	105	#5	1	10'-11"	1196
	S2	9	#6	1	10'-11"	148
	S3	4	#4	2	9'-1"	24
	S4	68	#4	3	3'-5"	155
	S5	6	#4	2	8'-5"	34
	S6	1	#4	2	9'-11"	7
	✱ S7	6	#5	STR	3'-8"	23
	S8	4	#4	2	8'-7"	23
	S9	1	#3	STR	1'-10"	1
EXTERIOR GDR.	S10	2	#5	2	8'-8"	18
INTERIOR GDR.	S10	4	#5	2	8'-8"	36
EXTERIOR GDR.	S11	5	#4	STR	7'-0"	23
INTERIOR GDR.	S12	5	#4	STR	18'-6"	62
	S13	6	#6	STR	3'-9"	34

✱ NOTE: S7 BARS SHALL BE BENT BEFORE SHIPMENT. HEAT BENDING SHALL NOT BE ALLOWED.

BAR TYPES

ALL BAR DIMENSIONS ARE OUT-TO-OUT

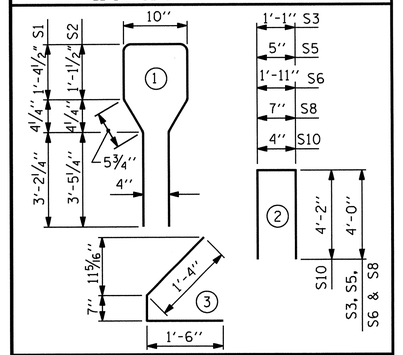

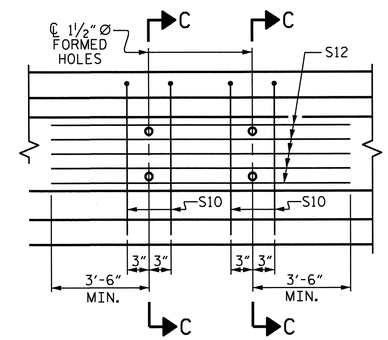

PARTIAL ELEVATION

SHOWING INTERMEDIATE DIAPHRAGM REINFORCING STEEL FOR INTERIOR GIRDERS

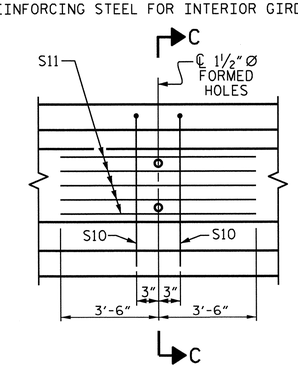

PARTIAL ELEVATION

SHOWING INTERMEDIATE DIAPHRAGM REINFORCING STEEL FOR EXTERIOR GIRDER

QUANTITIES FOR ONE GIRDER

	REINFORCING STEEL	6000 PSI CONCRETE	0.6" Ø L. R. STRANDS
	LB.	C.Y.	No.
GIRDER #1	1686	16.7	32
GIRDER #2	1743	16.7	32
GIRDER #3	1743	16.8	32
GIRDER #4	1686	16.8	32
TOTAL	6858	67.0	128

GIRDERS REQUIRED

SPAN C	NUMBER	LENGTH
GIRDER #1	1	82'-2¾"
GIRDER #2	1	82'-4¾"
GIRDER #3	1	82'-6¾"
GIRDER #4	1	82'-8⅞"
TOTAL	4	329'-11⅛"

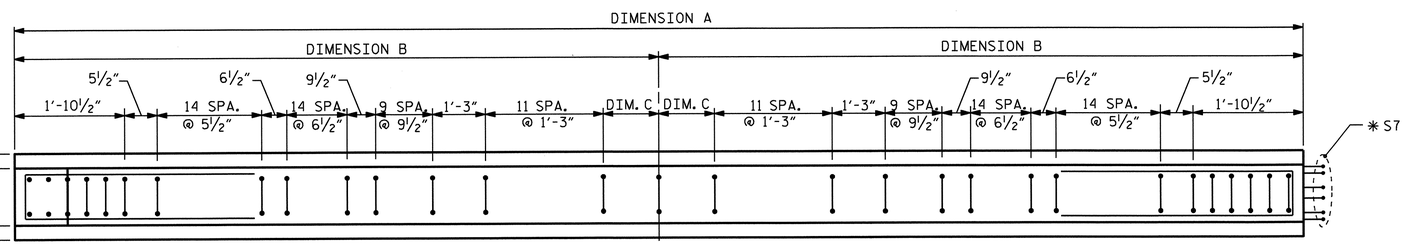

PLAN OF GIRDER

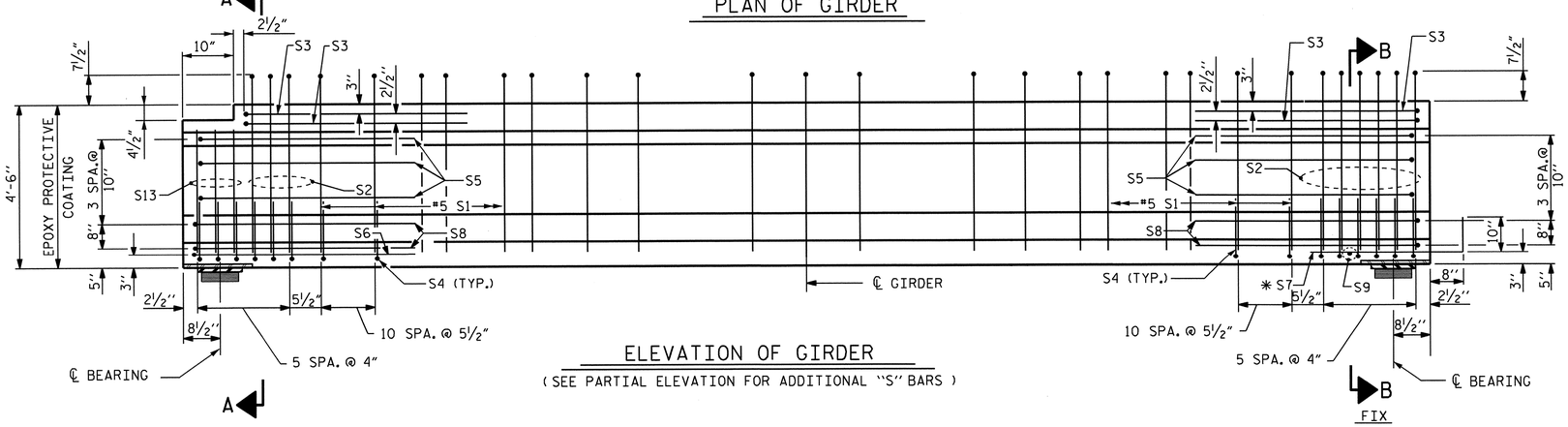

ELEVATION OF GIRDER

(SEE PARTIAL ELEVATION FOR ADDITIONAL "S" BARS)

PROJECT NO. R-2707B

CLEVELAND COUNTY

STATION: 340+70.00-L-

SHEET 3 OF 6

STATE OF NORTH CAROLINA
DEPARTMENT OF TRANSPORTATION
RALEIGH

AASHTO TYPE IV PRESTRESSED CONCRETE GIRDER CONTINUOUS FOR LIVE LOAD (RIGHT LANE) (SPAN C)

NORTH CAROLINA PROFESSIONAL SEAL 15826 ENGINEER BRUCE D. KLAPPENBACH 6-27-2013

ASSEMBLED BY : H. T. BARBOUR	DATE : 8-16-11
CHECKED BY : D. A. GLADDEN	DATE : 2-12

DRAWN BY : ELR 8/91	REV. 7/17/98 RWW/LES
CHECKED BY : GRP 8/91	REV. 10/17/00R RWW/LES
	REV. 5/1/06R TLA/GM

DESIGN ENGINEER OF RECORD: B. A. DUKE DATE : 5-13

REVISIONS

NO.	BY:	DATE:	NO.	BY:	DATE:
1			3		
2			4		

SHEET NO. S-198

TOTAL SHEETS 266

STR. #6

STD. NO. PCG6 (Sht. 1)

14-MAY-2013 09:09
K:\Structures\Plans\Bailey\STR5and6\TBARBOUR\Microstation\RIGHT LANE\superstructure\R2707B_SD_G*.dgn
tbarbour

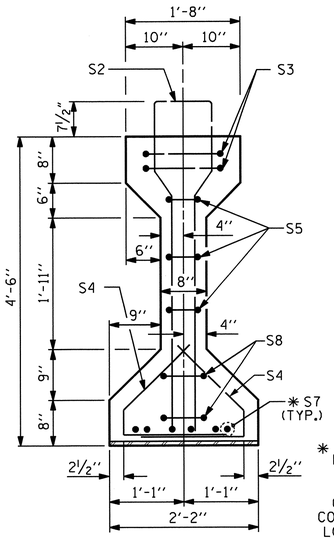

SECTION B-B

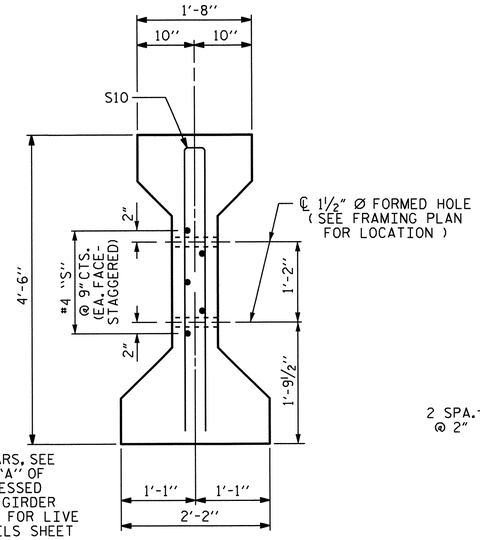

* FOR S7 BARS, SEE DETAIL "A" OF PRESTRESSED CONCRETE GIRDER CONTINUOUS FOR LIVE LOAD DETAILS SHEET

SECTION C-C

(S1 BARS NOT SHOWN)

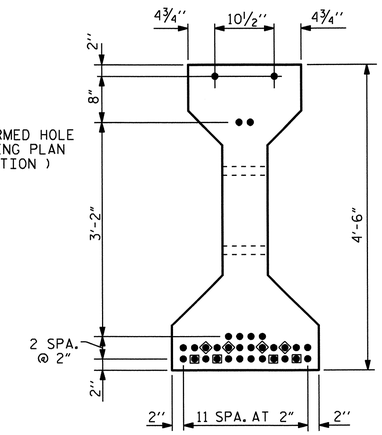

AT END & ℄ OF GIRDER

0.6" Ø LOW RELAXATION STRAND LAYOUT

	GIRDER DIMENSIONS		
	DIM. A	DIM. B	DIM. C
GIRDER #1	81'-11⅞"	40'-11 15/16"	1'-2 7/16"
GIRDER #2	82'-2"	41'-1"	1'-3½"
GIRDER #3	82'-4¼"	41'-2⅛"	1'-4⅝"
GIRDER #4	82'-6⅜"	41'-3 3/16"	1'-5 11/16"

DEBONDING LEGEND

- ● FULLY BONDED STRANDS
- ■ STRANDS DEBONDED FOR 10'-8½" FROM ENDS OF GIRDER
- ◆ STRANDS DEBONDED FOR 8'-8½" FROM ENDS OF GIRDER

0.6" Ø L. R. GRADE 270 STRANDS		
AREA (SQUARE INCHES)	ULTIMATE STRENGTH (LBS. PER STRAND)	APPLIED PRESTRESS (LBS. PER STRAND)
0.217	58,600	43,950

REINFORCING STEEL FOR ONE GIRDER

	BAR	NUMBER	SIZE	TYPE	LENGTH	WEIGHT
	S1	105	#5	1	10'-11"	1196
	S2	12	#6	1	10'-11"	197
	S3	4	#4	2	9'-1"	24
	S4	68	#4	3	3'-5"	155
	S5	6	#4	2	8'-5"	34
	* S7	12	#5	STR	3'-8"	46
	S8	4	#4	2	8'-7"	23
	S9	2	#3	STR	1'-10"	1
EXTERIOR GDR.	S10	2	#5	2	8'-8"	18
INTERIOR GDR.	S10	4	#5	2	8'-8"	36
EXTERIOR GDR.	S11	5	#4	STR	7'-0"	23
INTERIOR GDR.	S12	5	#4	STR	18'-10"	63

* NOTE: S7 BARS SHALL BE BENT BEFORE SHIPMENT. HEAT BENDING SHALL NOT BE ALLOWED.

BAR TYPES

ALL BAR DIMENSIONS ARE OUT-TO-OUT

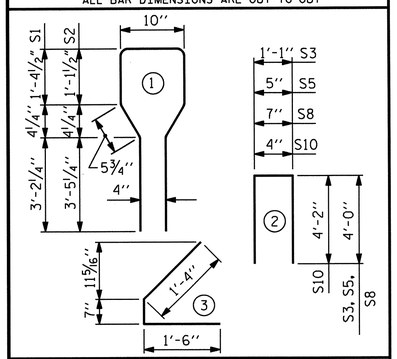

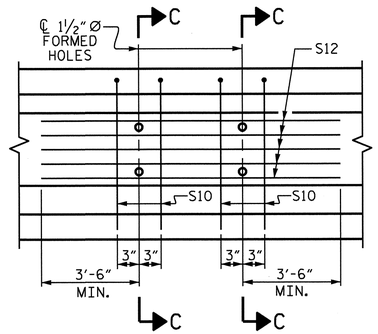

PARTIAL ELEVATION

SHOWING INTERMEDIATE DIAPHRAGM REINFORCING STEEL FOR INTERIOR GIRDERS

QUANTITIES FOR ONE GIRDER

	REINFORCING STEEL	6000 PSI CONCRETE	0.6" Ø L.R. STRANDS
	LB.	C.Y.	No.
GIRDER #1	1717	16.6	32
GIRDER #2	1775	16.7	32
GIRDER #3	1775	16.7	32
GIRDER #4	1717	16.7	32
TOTAL	6984	66.7	128

GIRDERS REQUIRED

SPAN D	NUMBER	LENGTH
GIRDER #1	1	81'-11⅞"
GIRDER #2	1	82'-2"
GIRDER #3	1	82'-4¼"
GIRDER #4	1	82'-6⅜"
TOTAL	4	329'-0½"

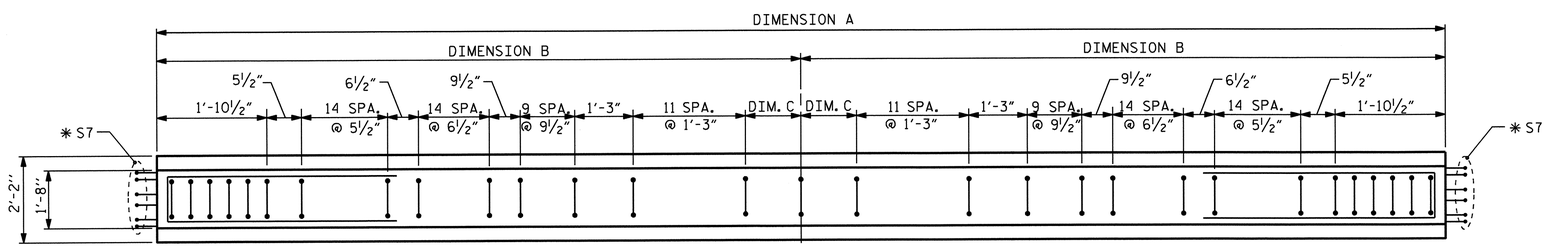

PLAN OF GIRDER

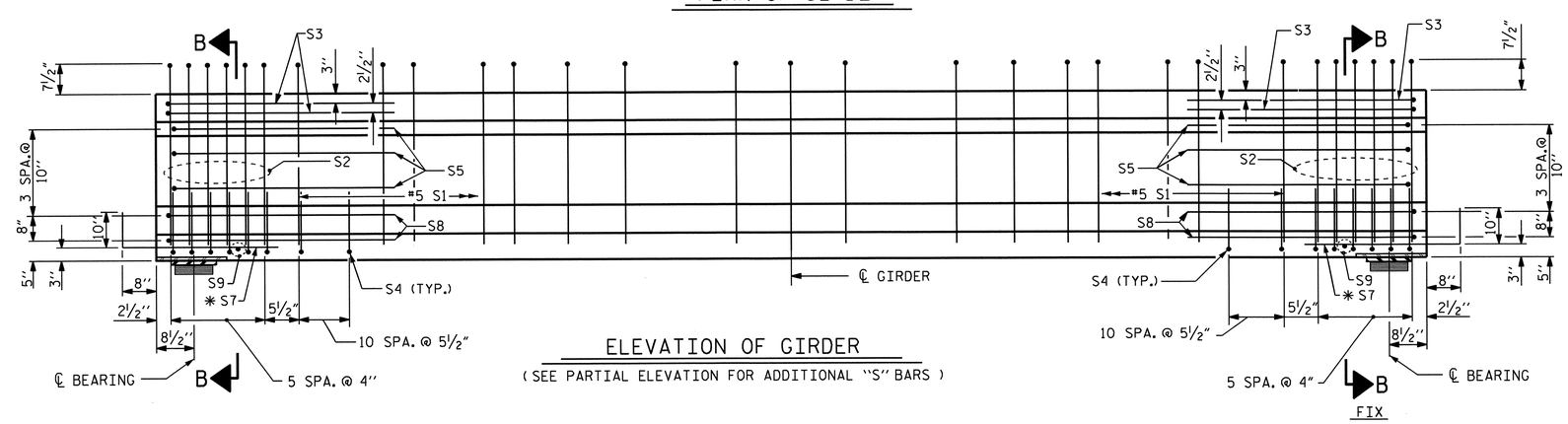

ELEVATION OF GIRDER

(SEE PARTIAL ELEVATION FOR ADDITIONAL "S" BARS)

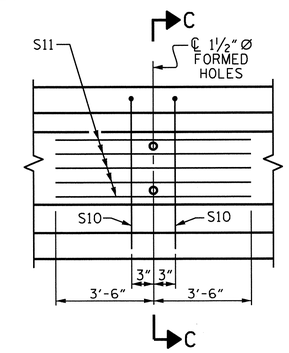

PARTIAL ELEVATION

SHOWING INTERMEDIATE DIAPHRAGM REINFORCING STEEL FOR EXTERIOR GIRDER

PROJECT NO. R-2707B

CLEVELAND COUNTY

STATION: 340+70.00-L-

SHEET 4 OF 6

STATE OF NORTH CAROLINA
DEPARTMENT OF TRANSPORTATION
RALEIGH

AASHTO TYPE IV PRESTRESSED CONCRETE GIRDER CONTINUOUS FOR LIVE LOAD (RIGHT LANE) (SPAN D)

NORTH CAROLINA PROFESSIONAL SEAL 19828 ENGINEER PRINCIPAL D. KLAPPENBACH 6-27-2013

ASSEMBLED BY :	H. T. BARBOUR	DATE :	8-16-11
CHECKED BY :	D. A. GLADDEN	DATE :	2-12

DRAWN BY :	ELR	8/91	REV. 7/17/98	RWW/LES
CHECKED BY :	GRP	8/91	REV. 10/17/00R	RWW/LES
			REV. 5/1/06R	TLA/GM

DESIGN ENGINEER OF RECORD: B. A. DUKE DATE : 5-13

REVISIONS

NO.	BY:	DATE:	NO.	BY:	DATE:
1			3		
2			4		

SHEET NO. S-199

TOTAL SHEETS 266

STR. #6

STD. NO. PCG6 (Sht. 1)

14-MAY-2013 09:09
K:\Structures\Plans\Bailey\STR5and6\TBARBOUR\Microstation\RIGHT LANE\superstructure\R2707B_SD_G*.dgn
tbarbour

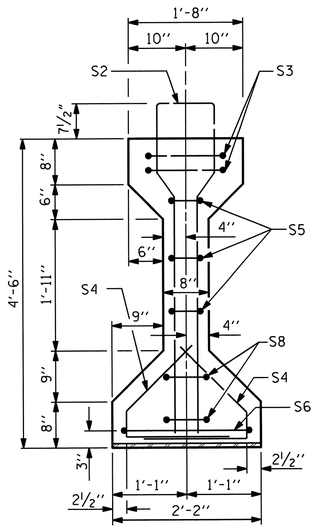

SECTION A-A

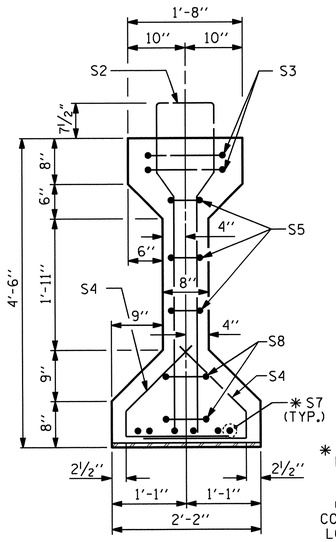

SECTION B-B

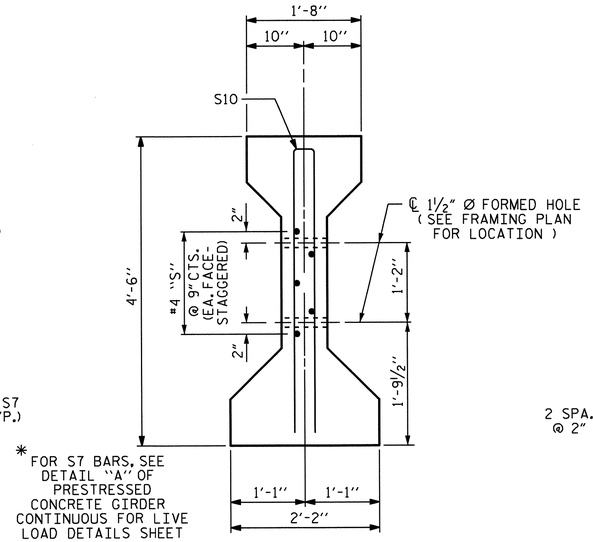

* FOR S7 BARS, SEE DETAIL "A" OF PRESTRESSED CONCRETE GIRDER CONTINUOUS FOR LIVE LOAD DETAILS SHEET

SECTION C-C

(S1 BARS NOT SHOWN)

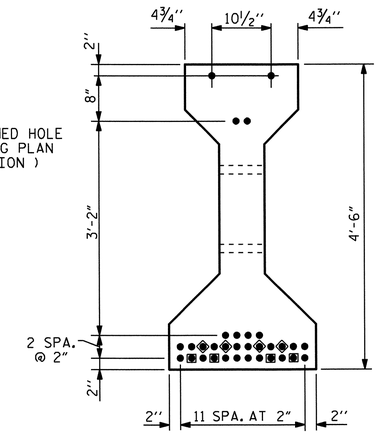

AT END & ℄ OF GIRDER

0.6" Ø LOW RELAXATION STRAND LAYOUT

	GIRDER DIMENSIONS		
	DIM. A	DIM. B	DIM. C
GIRDER #1	81'-6"	40'-9"	11½"
GIRDER #2	81'-8¼"	40'-10⅛"	1'-0⅝"
GIRDER #3	81'-10½"	40'-11¼"	1'-1¾"
GIRDER #4	82'-0¾"	41'-0⅜"	1'-2⅞"

DEBONDING LEGEND

- ● FULLY BONDED STRANDS
- ■ STRANDS DEBONDED FOR 10'-8½" FROM ENDS OF GIRDER
- ◆ STRANDS DEBONDED FOR 8'-8½" FROM ENDS OF GIRDER

0.6" Ø L. R. GRADE 270 STRANDS		
AREA (SQUARE INCHES)	ULTIMATE STRENGTH (LBS. PER STRAND)	APPLIED PRESTRESS (LBS. PER STRAND)
0.217	58,600	43,950

REINFORCING STEEL FOR ONE GIRDER

	BAR	NUMBER	SIZE	TYPE	LENGTH	WEIGHT
	S1	105	#5	1	10'-11"	1196
	S2	12	#6	1	10'-11"	197
	S3	4	#4	2	9'-1"	24
	S4	68	#4	3	3'-5"	155
	S5	6	#4	2	8'-5"	34
	S6	1	#4	2	9'-11"	7
	* S7	6	#5	STR	3'-8"	23
	S8	4	#4	2	8'-7"	23
	S9	1	#3	STR	1'-10"	1
EXTERIOR GDR.	S10	2	#5	2	8'-8"	18
INTERIOR GDR.	S10	4	#5	2	8'-8"	36
EXTERIOR GDR.	S11	5	#4	STR	7'-0"	23
INTERIOR GDR.	S12	5	#4	STR	19'-2"	64

* NOTE: S7 BARS SHALL BE BENT BEFORE SHIPMENT. HEAT BENDING SHALL NOT BE ALLOWED.

BAR TYPES

ALL BAR DIMENSIONS ARE OUT-TO-OUT

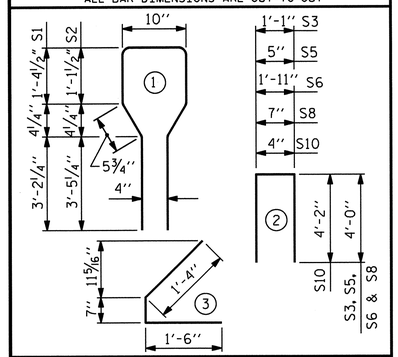

QUANTITIES FOR ONE GIRDER

	REINFORCING STEEL	6000 PSI CONCRETE	0.6" Ø L.R. STRANDS
	LB.	C.Y.	No.
GIRDER #1	1701	16.5	32
GIRDER #2	1760	16.6	32
GIRDER #3	1760	16.6	32
GIRDER #4	1701	16.7	32
TOTAL	6922	66.4	128

GIRDERS REQUIRED

SPAN E	NUMBER	LENGTH
GIRDER #1	1	81'-6"
GIRDER #2	1	81'-8¼"
GIRDER #3	1	81'-10½"
GIRDER #4	1	82'-0¾"
TOTAL	4	327'-1½"

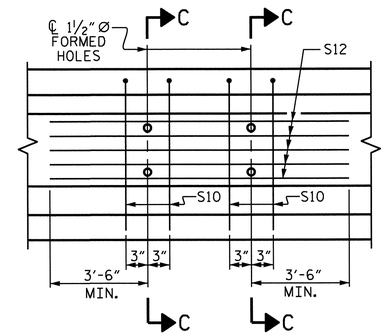

PARTIAL ELEVATION

SHOWING INTERMEDIATE DIAPHRAGM REINFORCING STEEL FOR INTERIOR GIRDERS

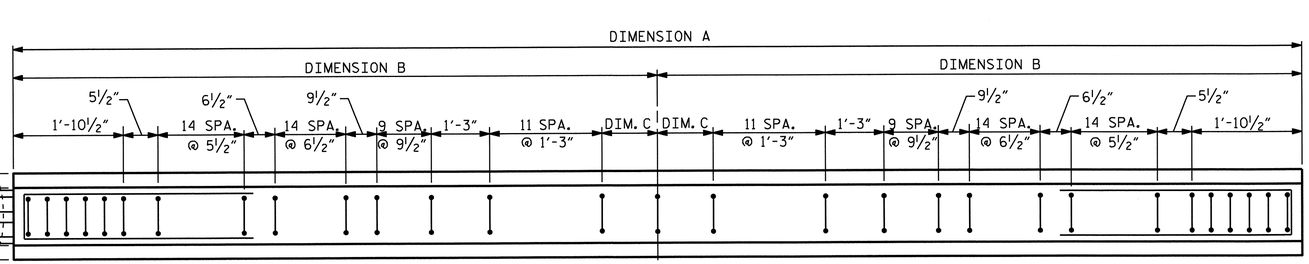

PLAN OF GIRDER

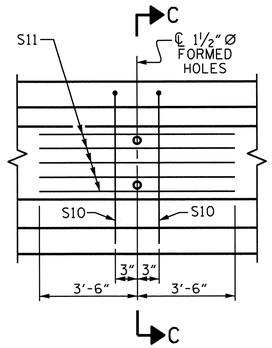

PARTIAL ELEVATION

SHOWING INTERMEDIATE DIAPHRAGM REINFORCING STEEL FOR EXTERIOR GIRDER

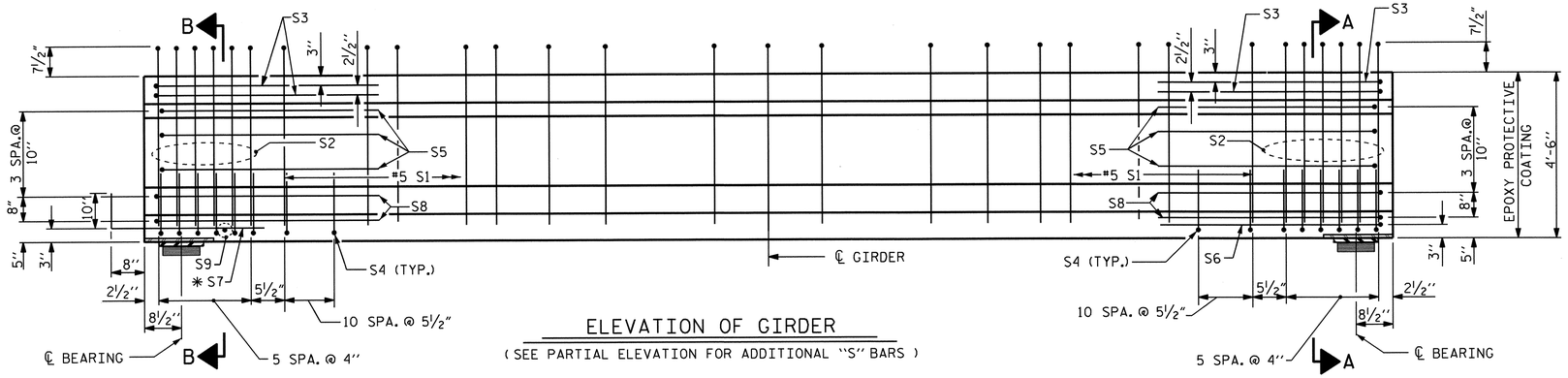

ELEVATION OF GIRDER

(SEE PARTIAL ELEVATION FOR ADDITIONAL "S" BARS)

FIX

EXP.

PROJECT NO. R-2707B

CLEVELAND COUNTY

STATION: 340+70.00-L-

SHEET 5 OF 6

STATE OF NORTH CAROLINA
DEPARTMENT OF TRANSPORTATION
RALEIGH

AASHTO TYPE IV
PRESTRESSED CONCRETE GIRDER
CONTINUOUS FOR LIVE LOAD
(RIGHT LANE) (SPAN E)

NORTH CAROLINA PROFESSIONAL SEAL 15827 ENGINEER BRUCE D. KLAPPENBACH 6-27-2013

ASSEMBLED BY : H. T. BARBOUR	DATE : 7-15-11		
CHECKED BY : D. A. GLADDEN	DATE : 2-12		
DRAWN BY : ELR 8/91	REV. 7/17/98 RWW/LES	DESIGN ENGINEER OF RECORD:	
CHECKED BY : GRP 8/91	REV. 10/17/00R RWW/LES	B. A. DUKE	DATE : 5-13
	REV. 5/1/06R TLA/GM		

REVISIONS

NO.	BY:	DATE:	NO.	BY:	DATE:
1			3		
2			4		

SHEET NO. S-200

TOTAL SHEETS 266

STR. #6

STD. NO. PCG6 (Sht. 1)

14-MAY-2013 09:09
K:\Structures\Plans\Bailey\STR5and6\TBARBOUR\Microstation\RIGHT LANE\superstructure\R2707B_SD_G*.dgn
tbarbour

DEAD LOAD DEFLECTION TABLE FOR GIRDERS

0.6" Ø LOW RELAXATION	SPAN A GIRDER 1										
TENTH POINTS	0	.1	.2	.3	.4	.5	.6	.7	.8	.9	0
CAMBER (GIRDER ALONE IN PLACE) ↑	0	0.079	0.149	0.204	0.239	0.251	0.239	0.204	0.149	0.079	0
* DEFLECTION DUE TO SUPERIMPOSED D.L. ↓	0	0.033	0.063	0.086	0.100	0.105	0.100	0.086	0.063	0.033	0
FINAL CAMBER ↑	0	9/16"	1 1/16"	1 7/16"	1 11/16"	1 3/4"	1 11/16"	1 7/16"	1 1/16"	9/16"	0

0.6" Ø LOW RELAXATION	SPAN A GIRDERS 2 & 3										
TENTH POINTS	0	.1	.2	.3	.4	.5	.6	.7	.8	.9	0
CAMBER (GIRDER ALONE IN PLACE) ↑	0	0.079	0.149	0.205	0.240	0.252	0.240	0.205	0.149	0.079	0
* DEFLECTION DUE TO SUPERIMPOSED D.L. ↓	0	0.037	0.070	0.096	0.112	0.118	0.112	0.096	0.070	0.037	0
FINAL CAMBER ↑	0	1/2"	15/16"	1 5/16"	1 1/2"	1 5/8"	1 1/2"	1 5/16"	15/16"	1/2"	0

0.6" Ø LOW RELAXATION	SPAN A GIRDER 4										
TENTH POINTS	0	.1	.2	.3	.4	.5	.6	.7	.8	.9	0
CAMBER (GIRDER ALONE IN PLACE) ↑	0	0.079	0.150	0.205	0.240	0.252	0.240	0.205	0.150	0.079	0
* DEFLECTION DUE TO SUPERIMPOSED D.L. ↓	0	0.034	0.064	0.087	0.102	0.107	0.102	0.087	0.064	0.034	0
FINAL CAMBER ↑	0	9/16"	1 1/16"	1 7/16"	1 11/16"	1 3/4"	1 11/16"	1 7/16"	1 1/16"	9/16"	0

0.6" Ø LOW RELAXATION	SPAN B GIRDER 1										
TENTH POINTS	0	.1	.2	.3	.4	.5	.6	.7	.8	.9	0
CAMBER (GIRDER ALONE IN PLACE) ↑	0	0.125	0.237	0.326	0.382	0.399	0.382	0.326	0.237	0.125	0
* DEFLECTION DUE TO SUPERIMPOSED D.L. ↓	0	0.053	0.111	0.137	0.160	0.168	0.160	0.137	0.111	0.053	0
FINAL CAMBER ↑	0	7/8"	1 5/8"	2 1/4"	2 1/2"	2 3/4"	2 1/2"	2 1/4"	1 5/8"	7/8"	0

0.6" Ø LOW RELAXATION	SPAN B GIRDERS 2 & 3										
TENTH POINTS	0	.1	.2	.3	.4	.5	.6	.7	.8	.9	0
CAMBER (GIRDER ALONE IN PLACE) ↑	0	0.126	0.238	0.326	0.382	0.401	0.382	0.326	0.238	0.126	0
* DEFLECTION DUE TO SUPERIMPOSED D.L. ↓	0	0.059	0.111	0.153	0.179	0.188	0.179	0.153	0.111	0.059	0
FINAL CAMBER ↑	0	13/16"	1 1/2"	2 1/16"	2 7/16"	2 9/16"	2 7/16"	2 1/16"	1 1/2"	13/16"	0

0.6" Ø LOW RELAXATION	SPAN B GIRDER 4										
TENTH POINTS	0	.1	.2	.3	.4	.5	.6	.7	.8	.9	0
CAMBER (GIRDER ALONE IN PLACE) ↑	0	0.126	0.239	0.327	0.383	0.402	0.383	0.327	0.239	0.126	0
* DEFLECTION DUE TO SUPERIMPOSED D.L. ↓	0	0.053	0.101	0.138	0.162	0.170	0.162	0.138	0.101	0.053	0
FINAL CAMBER ↑	0	7/8"	1 5/8"	2 1/4"	2 5/8"	2 13/16"	2 5/8"	2 1/4"	1 5/8"	7/8"	0

0.6" Ø LOW RELAXATION	SPAN C GIRDER 1										
TENTH POINTS	0	.1	.2	.3	.4	.5	.6	.7	.8	.9	0
CAMBER (GIRDER ALONE IN PLACE) ↑	0	0.079	0.150	0.205	0.240	0.252	0.240	0.205	0.150	0.079	0
* DEFLECTION DUE TO SUPERIMPOSED D.L. ↓	0	0.034	0.064	0.088	0.103	0.108	0.103	0.088	0.064	0.034	0
FINAL CAMBER ↑	0	9/16"	1"	1 3/8"	1 5/8"	1 3/4"	1 5/8"	1 3/8"	1"	9/16"	0

0.6" Ø LOW RELAXATION	SPAN C GIRDERS 2 & 3										
TENTH POINTS	0	.1	.2	.3	.4	.5	.6	.7	.8	.9	0
CAMBER (GIRDER ALONE IN PLACE) ↑	0	0.080	0.151	0.206	0.241	0.254	0.241	0.206	0.151	0.080	0
* DEFLECTION DUE TO SUPERIMPOSED D.L. ↓	0	0.038	0.072	0.099	0.116	0.121	0.116	0.099	0.072	0.038	0
FINAL CAMBER ↑	0	1/2"	15/16"	1 5/16"	1 1/2"	1 9/16"	1 1/2"	1 5/16"	15/16"	1/2"	0

0.6" Ø LOW RELAXATION	SPAN C GIRDER 4										
TENTH POINTS	0	.1	.2	.3	.4	.5	.6	.7	.8	.9	0
CAMBER (GIRDER ALONE IN PLACE) ↑	0	0.080	0.151	0.207	0.242	0.254	0.242	0.207	0.151	0.080	0
* DEFLECTION DUE TO SUPERIMPOSED D.L. ↓	0	0.035	0.066	0.090	0.105	0.110	0.105	0.090	0.066	0.035	0
FINAL CAMBER ↑	0	9/16"	1"	1 3/8"	1 5/8"	1 3/4"	1 5/8"	1 3/8"	1"	9/16"	0

0.6" Ø LOW RELAXATION	SPAN D GIRDER 1										
TENTH POINTS	0	.1	.2	.3	.4	.5	.6	.7	.8	.9	0
CAMBER (GIRDER ALONE IN PLACE) ↑	0	0.079	0.149	0.205	0.240	0.252	0.240	0.205	0.149	0.079	0
* DEFLECTION DUE TO SUPERIMPOSED D.L. ↓	0	0.034	0.064	0.087	0.102	0.107	0.102	0.087	0.064	0.034	0
FINAL CAMBER ↑	0	9/16"	1"	1 7/16"	1 5/8"	1 3/4"	1 5/8"	1 7/16"	1"	9/16"	0

0.6" Ø LOW RELAXATION	SPAN D GIRDERS 2 & 3										
TENTH POINTS	0	.1	.2	.3	.4	.5	.6	.7	.8	.9	0
CAMBER (GIRDER ALONE IN PLACE) ↑	0	0.079	0.151	0.206	0.241	0.253	0.241	0.206	0.151	0.079	0
* DEFLECTION DUE TO SUPERIMPOSED D.L. ↓	0	0.038	0.071	0.098	0.114	0.120	0.114	0.098	0.071	0.038	0
FINAL CAMBER ↑	0	1/2"	15/16"	1 5/16"	1 1/2"	1 9/16"	1 1/2"	1 5/16"	15/16"	1/2"	0

0.6" Ø LOW RELAXATION	SPAN D GIRDER 4										
TENTH POINTS	0	.1	.2	.3	.4	.5	.6	.7	.8	.9	0
CAMBER (GIRDER ALONE IN PLACE) ↑	0	0.080	0.151	0.206	0.241	0.253	0.241	0.206	0.151	0.080	0
* DEFLECTION DUE TO SUPERIMPOSED D.L. ↓	0	0.034	0.065	0.089	0.104	0.109	0.104	0.089	0.065	0.034	0
FINAL CAMBER ↑	0	9/16"	1"	1 3/8"	1 5/8'	1 3/4"	1 5/8'	1 3/8"	1"	9/16"	0

0.6" Ø LOW RELAXATION	SPAN E GIRDER 1										
TENTH POINTS	0	.1	.2	.3	.4	.5	.6	.7	.8	.9	0
CAMBER (GIRDER ALONE IN PLACE) ↑	0	0.078	0.148	0.203	0.238	0.250	0.238	0.203	0.148	0.078	0
* DEFLECTION DUE TO SUPERIMPOSED D.L. ↓	0	0.033	0.062	0.085	0.100	0.105	0.100	0.085	0.062	0.033	0
FINAL CAMBER ↑	0	9/16"	1 1/16"	1 7/16"	1 11/16"	1 3/4"	1 11/16"	1 7/16"	1 1/16"	9/16"	0

0.6" Ø LOW RELAXATION	SPAN E GIRDERS 2 & 3										
TENTH POINTS	0	.1	.2	.3	.4	.5	.6	.7	.8	.9	0
CAMBER (GIRDER ALONE IN PLACE) ↑	0	0.079	0.149	0.204	0.239	0.251	0.239	0.204	0.149	0.079	0
* DEFLECTION DUE TO SUPERIMPOSED D.L. ↓	0	0.037	0.070	0.095	0.112	0.117	0.112	0.095	0.070	0.037	0
FINAL CAMBER ↑	0	1/2"	15/16"	1 5/16"	1 1/2"	1 5/8"	1 1/2"	1 5/16"	15/16"	1/2"	0

0.6" Ø LOW RELAXATION	SPAN E GIRDER 4										
TENTH POINTS	0	.1	.2	.3	.4	.5	.6	.7	.8	.9	0
CAMBER (GIRDER ALONE IN PLACE) ↑	0	0.079	0.150	0.205	0.240	0.252	0.240	0.205	0.150	0.079	0
* DEFLECTION DUE TO SUPERIMPOSED D.L. ↓	0	0.034	0.062	0.087	0.102	0.100	0.102	0.087	0.062	0.034	0
FINAL CAMBER ↑	0	9/16"	1 1/16"	1 7/16"	1 5/8"	1 3/4"	1 5/8"	1 7/16"	1 1/16"	9/16"	0

* INCLUDES FUTURE WEARING SURFACE
ALL VALUES ARE SHOWN IN FEET (DECIMAL FORM), EXCEPT "FINAL CAMBER", WHICH IS GIVEN IN INCHES (FRACTION FORM).

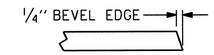

SECTION "G"

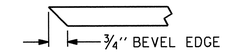

SECTION "F"
(SEE NOTES)

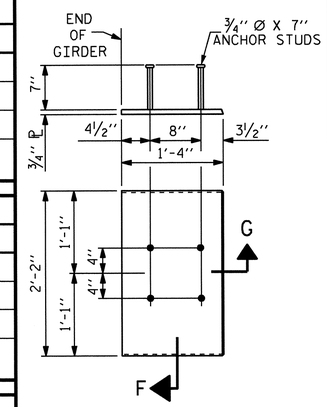

EMBEDDED PLATE "B-1" DETAILS FOR AASHTO TYPE IV GIRDER
(2 REQ'D PER GIRDER)

NOTES

ALL PRESTRESSING STRANDS SHALL BE 7-WIRE LOW-RELAXATION GRADE 270 STRANDS AND SHALL CONFORM TO AASHTO M203 EXCEPT FOR SAMPLING REQUIREMENTS WHICH SHALL BE IN ACCORDANCE WITH THE STANDARD SPECIFICATIONS.

ALL REINFORCING STEEL SHALL BE GRADE 60.

APPLY EPOXY PROTECTIVE COATING TO END OF GIRDER SURFACES INDICATED IN ELEVATION VIEW.

EMBEDDED PLATE "B-1" SHALL BE GALVANIZED IN ACCORDANCE WITH THE STANDARD SPECIFICATIONS. BEVEL EDGES OF PLATE "B-1" TO GIVE CLOSE FIT BUT NOT TIGHT FIT TO STEEL CASTING FORM.

ANCHOR STUDS SHALL CONFORM TO AASHTO M169 GRADES 1010 THROUGH 1020 OR APPROVED EQUAL, AND SHALL MEET THE TYPE "B" REQUIREMENTS OF SUBSECTION 7.3 OF THE ANSI/AASHTO/AWS D1.5 BRIDGE WELDING CODE.

AT ENDS OF GIRDERS TO BE EMBEDDED IN CONCRETE DIAPHRAGMS OR END WALLS, PRESTRESSING STRANDS MAY EXTEND A MAXIMUM OF 2" BEYOND THE GIRDER ENDS. OTHERWISE, PRESTRESSING STRANDS SHALL BE CUT FLUSH WITH THE GIRDER ENDS.

THE TRANSFER OF LOAD FROM THE ANCHORAGES TO THE GIRDER SHALL BE DONE WHEN CONCRETE HAS REACHED A COMPRESSIVE STRENGTH OF NOT LESS THAN 5400 PSI. FOR SPANS A, C, D AND E AND 7400 PSI. FOR SPAN B.

DEPENDING ON THE TYPE OF SYSTEM USED TO SUPPORT THE DECK SLAB FORMS, PRESET ANCHORS MAY BE NECESSARY IN THE PRESTRESSED CONCRETE GIRDER.

THE TOP SURFACE OF THE GIRDER, EXCLUDING THE OUTSIDE 4", SHALL BE RAKED TO A DEPTH OF 1/4".

THE CONTRACTOR HAS THE OPTION TO PROVIDE, AT NO ADDITIONAL COST TO THE DEPARTMENT, 2 ADDITIONAL STRANDS AT THE TOP OF THE GIRDER TO FACILITATE TYING OF THE REINFORCING STEEL. THESE STRANDS SHALL BE PULLED TO A LOAD OF 4500 lbs.

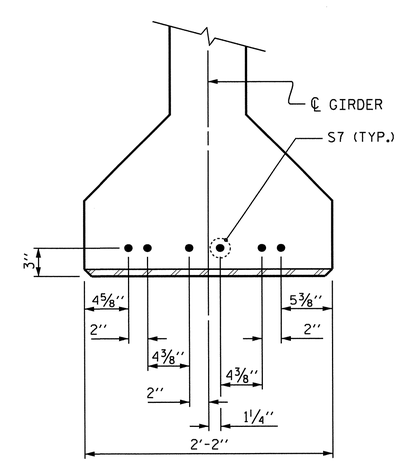

DETAIL "A"
(FOR AASHTO TYPE IV GIRDERS)

NORTH CAROLINA PROFESSIONAL SEAL 15825 BRADLEY D. KLAPPENBACH
6-27-2013

PROJECT NO. R-2707B
CLEVELAND COUNTY
STATION: 340+70.00-L-

SHEET 6 OF 6

STATE OF NORTH CAROLINA
DEPARTMENT OF TRANSPORTATION
RALEIGH

PRESTRESSED CONCRETE GIRDER CONTINUOUS FOR LIVE LOAD AND DEAD LOAD DEFLECTIONS DETAILS (RIGHT LANE)

REVISIONS						SHEET NO.
NO.	BY:	DATE:	NO.	BY:	DATE:	S-201
1			3			TOTAL SHEETS
2			4			266

ASSEMBLED BY : H. T. BARBOUR	DATE : 8-22-11	
CHECKED BY : D. A. GLADDEN	DATE : 2-12	
DRAWN BY : ELR 11/91	REV. 10/17/00 RWW/LES	DESIGN ENGINEER OF RECORD:
CHECKED BY : GRP 11/91	REV. 7/10/01RR LES/RDR	B. A. DUKE DATE : 5-13
	REV. 5/1/06 TLA/GM	

14-MAY-2013 09:09
K:\Structures\Plans\Bailey\STR5and6\TBARBOUR\Microstation\RIGHT LANE\superstructure\R2707B_SD_G*.dgn
tbarbour

STR. #6

STD. NO. PCG11 (Sht. 3)

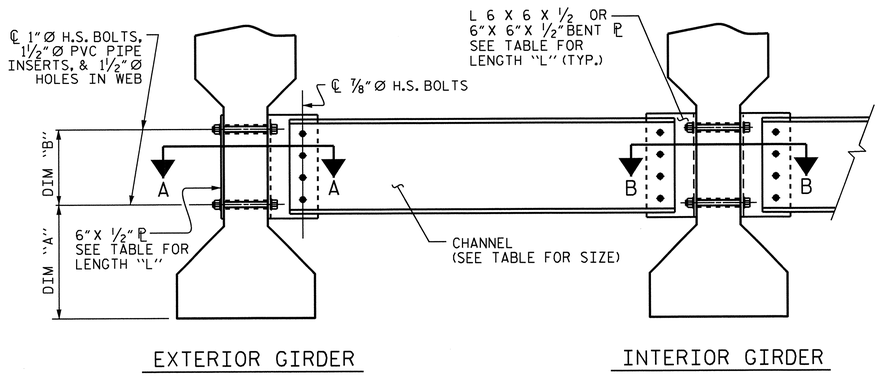

PART SECTION AT INTERMEDIATE DIAPHRAGM

(TYPE III OR TYPE IV GIRDER SHOWN)

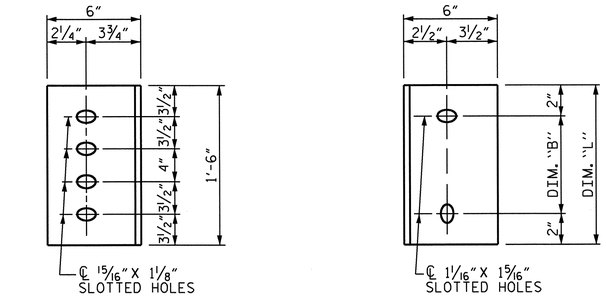

DIAPHRAGM FACE
(TYPE III OR TYPE IV GDR.)

WEB FACE

CONNECTOR PLATE DETAILS

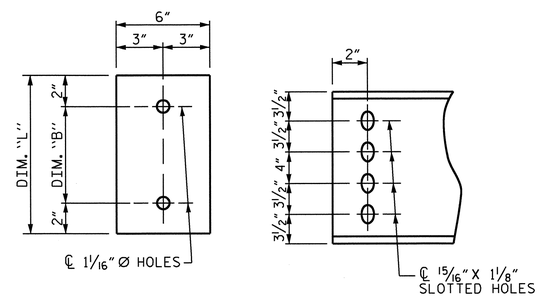

PLATE DETAILS

CHANNEL END
(TYPE III OR TYPE IV GDR.)

STRUCTURAL STEEL NOTES

ALL INTERMEDIATE DIAPHRAGM STEEL AND CONNECTOR PLATES SHALL BE AASHTO M270 GRADE 50 OR APPROVED EQUAL.

TENSION ON THE ASTM A325 BOLTS THROUGH THE CHANNEL MEMBER SHALL BE CALIBRATED USING DIRECT TENSION INDICATOR WASHERS IN ACCORDANCE WITH THE STANDARD SPECIFICATIONS.

TENSION ON THE ASTM A449 BOLTS THROUGH THE GIRDER WEB SHALL BE SNUG TIGHTENED FOLLOWED BY AN ADDITIONAL ¼ TURN.

THE PLATES, BENT PLATES, CHANNELS, AND ANGLES SHALL BE GALVANIZED OR METALLIZED IN ACCORDANCE WITH THE STANDARD SPECIFICATIONS. FOR THERMAL SPRAYED COATINGS (METALLIZATION), SEE SPECIAL PROVISIONS.

FOR METALLIZATION, APPLY AN 8 MIL THICK 99.99 PERCENT ZINC (W-Zn-1) THERMAL SPRAYED COATING WITH A 0.5 MIL THICK SEAL COAT TO ALL STEEL DIAPHRAGM SURFACES IN ACCORDANCE WITH THE THERMAL SPRAYED COATINGS SPECIAL PROVISION AND SECTION 442 OF THE STANDARD SPECIFICATIONS.

GALVANIZE THE HIGH STRENGTH BOLTS, NUTS, WASHERS AND DIRECT TENSION INDICATORS IN ACCORDANCE WITH THE STANDARD SPECIFICATIONS.

USE AN ASTM F436 HARDENED WASHER WITH STANDARD AND SLOTTED HOLES UNDER EACH BOLT HEAD AND NUT.

FOR BOLTS THROUGH THE GIRDER WEB, PROVIDE SUFFICIENT LENGTH OF THREADS ON ALL BOLTS TO ACCOMMODATE WASHERS AND THE THICKNESS OF CONNECTING MEMBER PLUS AT LEAST ¼" PROJECTION BEYOND THE NUT.

INTERMEDIATE DIAPHRAGM ASSEMBLY SHALL COMPLY WITH SECTION 1072 OF THE STANDARD SPECIFICATIONS.

SUBMIT TWO SETS OF WORKING DRAWINGS FOR THE INTERMEDIATE DIAPHRAGM ASSEMBLY FOR REVIEW, COMMENTS AND ACCEPTANCE. AFTER REVIEW, COMMENTS, AND ACCEPTANCE, SUBMIT SEVEN SETS FOR DISTRIBUTION.

IN THE EXTERIOR BAYS, PLACE TEMPORARY STRUTS BETWEEN PRESTRESSED GIRDERS ADJACENT TO THE STEEL DIAPHRAGMS. STRUTS SHALL REMAIN IN PLACE 3 DAYS AFTER CONCRETE IS PLACED.

THE COST OF THE STEEL DIAPHRAGMS AND ASSEMBLIES SHALL BE INCLUDED IN THE UNIT PRICE BID FOR PRESTRESSED CONCRETE GIRDERS.

TABLE

GIRDER TYPE	CHANNEL SIZE	DIM "A"	DIM "B"	DIM "L"
IV	MC 18 × 42.7	1'-9½"	1'-2"	1'-6"

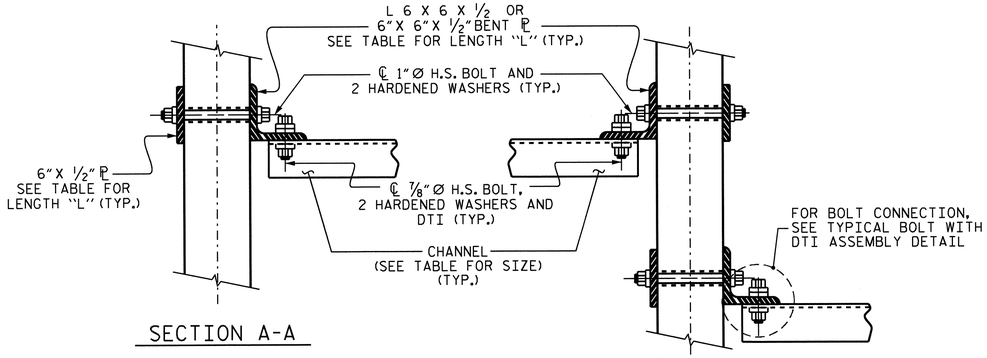

SECTION A-A

SECTION B-B

CONNECTION DETAILS

(FOR SKEW < 70° OR SKEW > 110°)

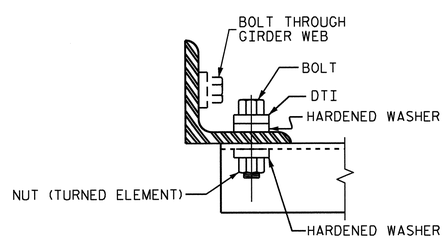

BOLT WITH DTI ASSEMBLY DETAIL

PROJECT NO. R-2707B
CLEVELAND COUNTY
STATION: 340+70.00 -L-

STATE OF NORTH CAROLINA
DEPARTMENT OF TRANSPORTATION
RALEIGH

INTERMEDIATE STEEL DIAPHRAGMS FOR TYPE IV PRESTRESSED CONCRETE GIRDERS (RIGHT LANE)

NORTH CAROLINA PROFESSIONAL SEAL 15825 ENGINEER BRUCE D. KLAPPENBACH
6-27-2013

REVISIONS						SHEET NO.
NO.	BY:	DATE:	NO.	BY:	DATE:	S-202
1			3			TOTAL SHEETS
2			4			266

DESIGN ENGINEER OF RECORD: B. A. DUKE		DATE : 5-13	
ASSEMBLED BY : H. T. BARBOUR		DATE : 8-16-11	
CHECKED BY : D. A. GLADDEN		DATE : 12-11	
DRAWN BY : TLA 6/05	ADDED 10/21/05		
CHECKED BY : VC 6/05	REV. 5/1/06RRR		KMM/GM
	REV. 10/1/11		MAA/GM

STR. #6 STD. NO. PCG10

14-MAY-2013 09:09
K:\Structures\Plans\Bailey\STR5and6\TBARBOUR\Microstation\RIGHT LANE\superstructure\R2707B_SD_G*.dgn
tbarbour

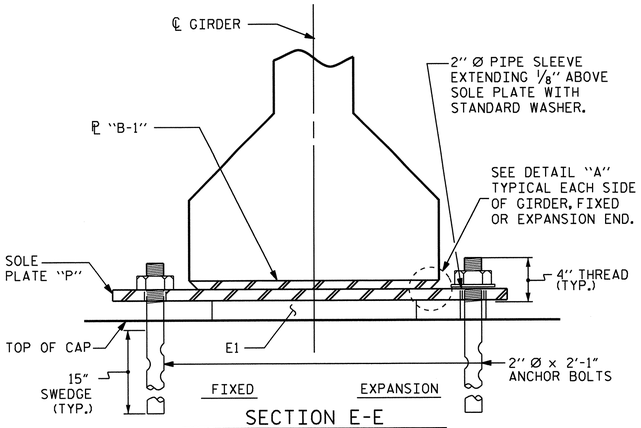

SECTION E-E

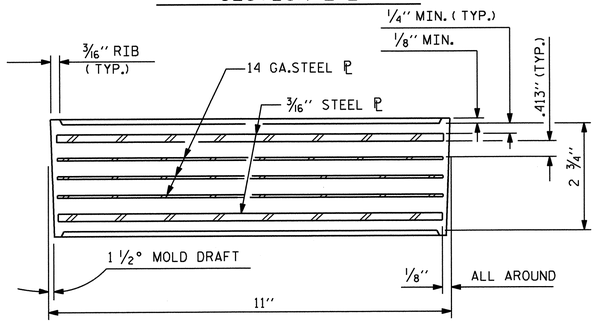

TYPICAL SECTION OF ELASTOMERIC BEARINGS

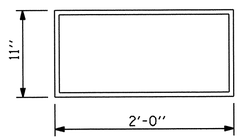

E1 (40 REQ'D)

PLAN VIEW OF ELASTOMERIC BEARING

TYPE VII

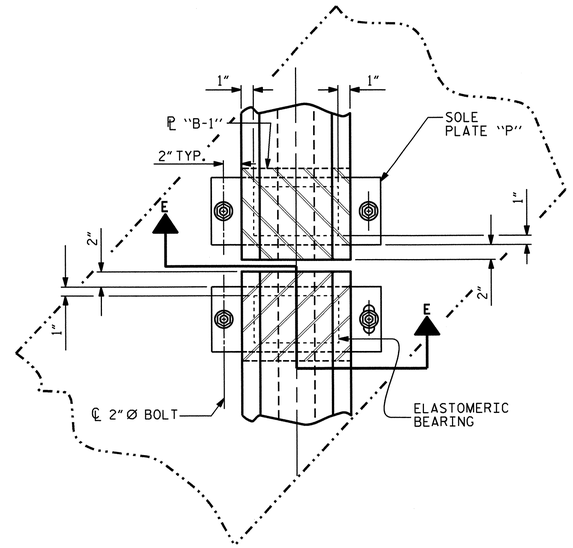

TYPICAL HALF-PLAN (SHOWING CONTINUOUS BENT)

TYPICAL HALF-PLAN (SHOWING SIMPLE SPAN BENT)

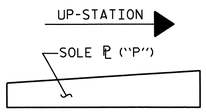

SOLE ℙ PLACEMENT DETAIL

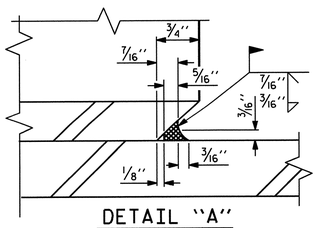

DETAIL "A"

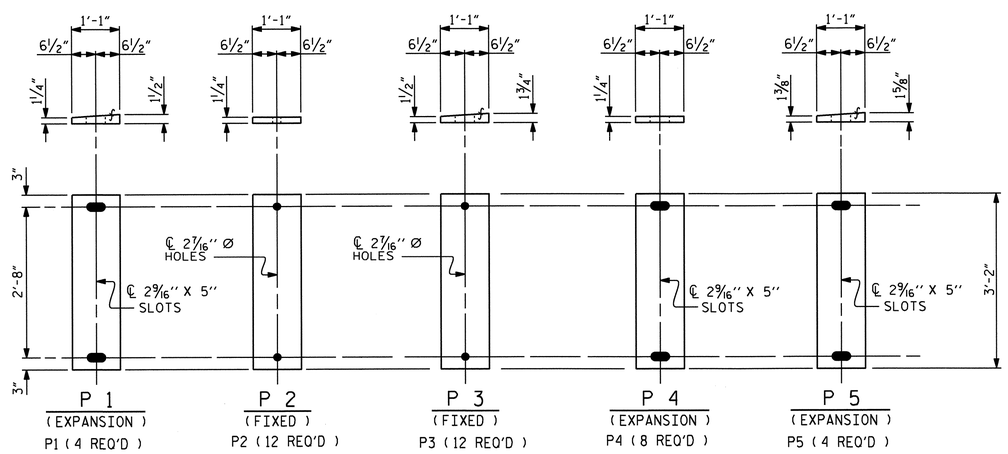

SOLE PLATE DETAILS ("P")

NOTES

AT ALL FIXED POINTS OF SUPPORT, NUTS FOR ANCHOR BOLTS ARE TO BE TIGHTENED FINGER TIGHT AND THEN BACKED OFF 1/2 TURN. THE THREAD OF THE NUT AND BOLT SHALL THEN BE BURRED WITH A SHARP POINTED TOOL.

THE 2" Ø PIPE SLEEVE SHALL BE CUT FROM SCHEDULE 40 PVC PLASTIC PIPE. THE PVC PLASTIC PIPE SHALL MEET THE REQUIREMENTS OF ASTM D1785.

STEEL SOLE PLATES, ANCHOR BOLTS, NUTS, AND WASHERS SHALL BE GALVANIZED IN ACCORDANCE WITH THE STANDARD SPECIFICATIONS.

PRIOR TO WELDING, GRIND THE GALVANIZED SURFACE OF THE PORTION OF THE EMBEDDED PLATE AND SOLE PLATE THAT ARE TO BE WELDED. AFTER WELDING, DAMAGED GALVANIZED SURFACES SHALL BE REPAIRED IN ACCORDANCE WITH THE STANDARD SPECIFICATIONS.

WHEN WELDING THE SOLE PLATE TO THE EMBEDDED PLATE IN THE GIRDER, USE TEMPERATURE INDICATING WAX PENS, OR OTHER SUITABLE MEANS, TO ENSURE THAT THE TEMPERATURE OF THE SOLE PLATE DOES NOT EXCEED 300°F. TEMPERATURES ABOVE THIS MAY DAMAGE THE ELASTOMER.

SOLE PLATE "P", BOLTS, NUTS, WASHERS, AND PIPE SLEEVE SHALL BE INCLUDED IN THE PAY ITEM FOR PRESTRESSED CONCRETE GIRDERS.

ANCHOR BOLTS SHALL MEET THE REQUIREMENTS OF ASTM A449. NUTS SHALL MEET THE REQUIREMENTS OF AASHTO M291-DH OR AASHTO M292-2H. WASHERS SHALL MEET THE REQUIREMENTS OF AASHTO M293. NO SHOP DRAWINGS ARE REQUIRED FOR ANCHOR BOLTS, NUTS AND WASHERS. SHOP INSPECTION IS REQUIRED.

ALL SURFACES OF BEARING PLATES SHALL BE SMOOTH AND STRAIGHT.

THE ELASTOMER IN THE STEEL REINFORCED BEARINGS SHALL HAVE A SHEAR MODULUS OF 0.160 KSI, IN ACCORDANCE WITH AASHTO M251.

FOR STEEL REINFORCED ELASTOMERIC BEARINGS, SEE SPECIAL PROVISIONS.

LOAD RATINGS	
	MAX.D.L.+ L.L.
TYPE VII	264 K

PROJECT NO. R-2707B
CLEVELAND COUNTY
STATION: 340+70.00-L-

STATE OF NORTH CAROLINA
DEPARTMENT OF TRANSPORTATION
RALEIGH

ELASTOMERIC BEARING DETAILS

PRESTRESSED CONCRETE GIRDER SUPERSTRUCTURE (RIGHT LANE)

NORTH CAROLINA PROFESSIONAL SEAL 15825 ENGINEER D. K. LAPPANEN
6-27-2013

REVISIONS						
NO.	BY:	DATE:	NO.	BY:	DATE:	
1			3			
2			4			

SHEET NO. S-203
TOTAL SHEETS 266

DESIGN ENGINEER OF RECORD: B. A. DUKE		DATE : 5-13	
ASSEMBLED BY : H. T. BARBOUR		DATE : 8-15-11	
CHECKED BY : D. A. GLADDEN		DATE : 2-12	
DRAWN BY : EEM 2/97	REV. 5/1/06	TLA/GM	
CHECKED BY : VAP 2/97	REV. 10/1/11	MAA/GM	
	REV. 10/24/12	AAC/MAA	

14-MAY-2013 09:08
K:\Structures\Plans\Bailey\STR5and6\TBARBOUR\Microstation\RIGHT LANE\superstructure\R2707B_SD_BG.dgn
tbarbour

STR. #6 STD. NO. EB4 (SHT 3)

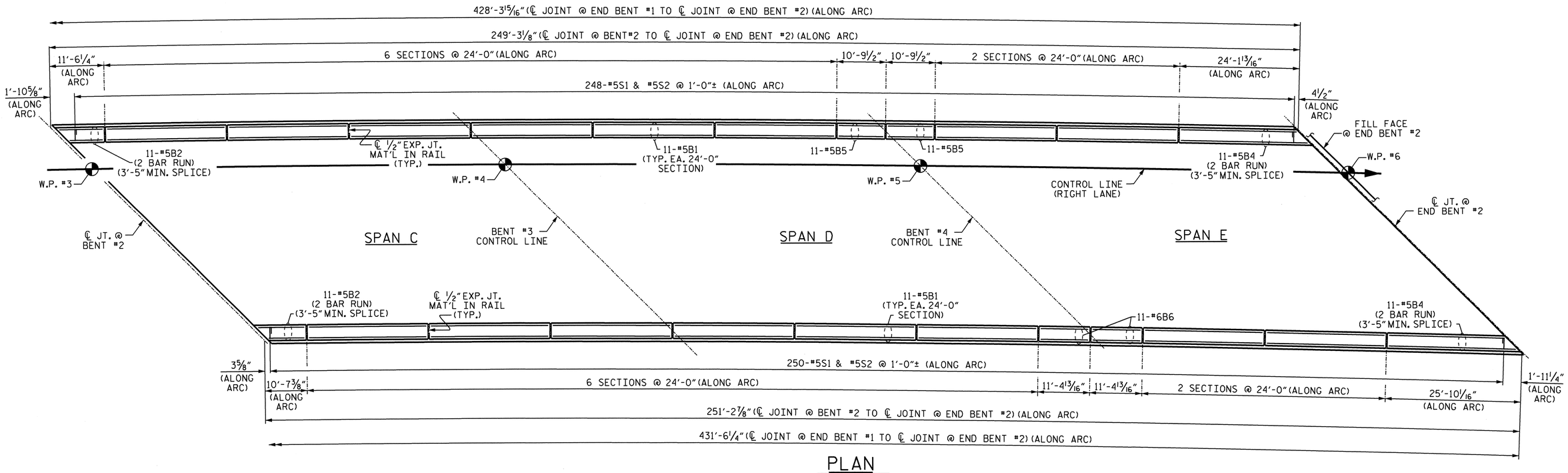

PLAN

(SPANS C, D & E)

BARRIER RAIL DIMENSIONS ARE MEASURED ALONG ARC AT OUTSIDE FACE OF BARRIER RAIL

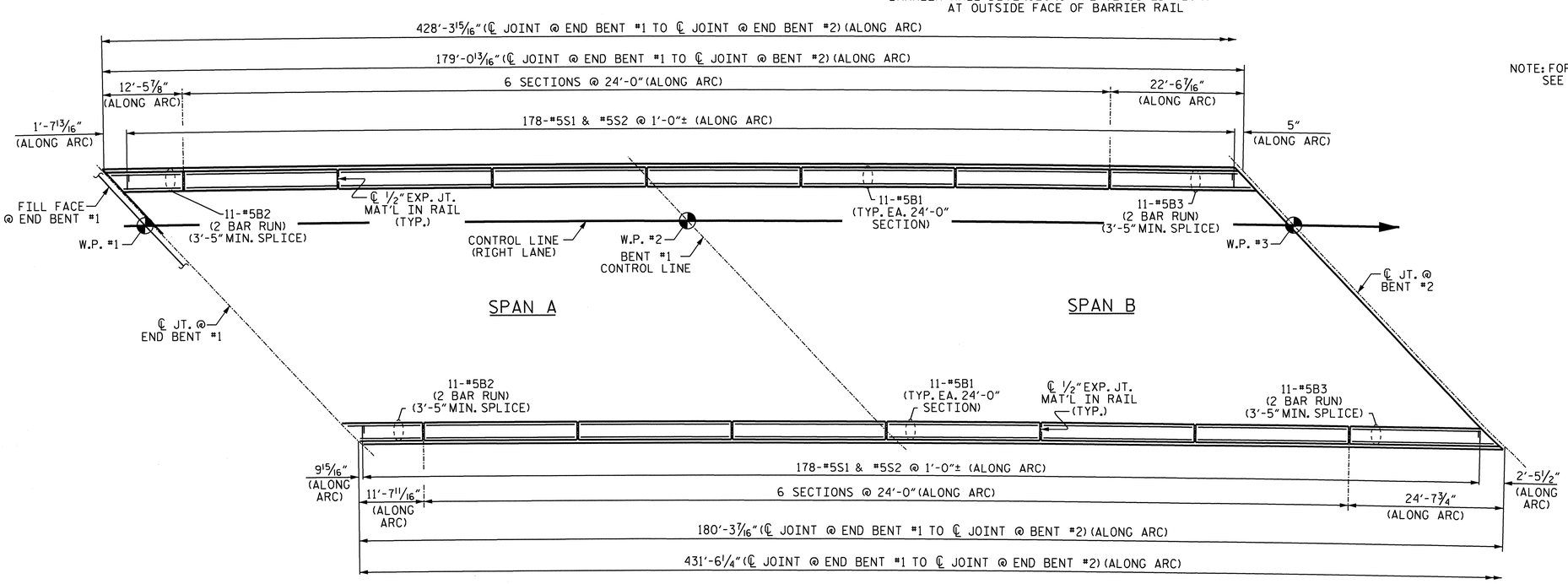

PLAN

(SPANS A & B)

BARRIER RAIL DIMENSIONS ARE MEASURED ALONG ARC AT OUTSIDE FACE OF BARRIER RAIL

NOTE: FOR BARRIER RAIL ON APPROACH SLABS, SEE BRIDGE APPROACH SLAB SHEETS.

PROJECT NO. R-2707B

CLEVELAND COUNTY

STATION: 340+70.00-L-

SHEET 1 OF 2

STATE OF NORTH CAROLINA
DEPARTMENT OF TRANSPORTATION
RALEIGH

CONCRETE BARRIER RAIL (RIGHT LANE)

NORTH CAROLINA PROFESSIONAL SEAL 15805 BRIDGE ENGINEER D. K. LAPPENBUSCH 6-21-2013

REVISIONS						SHEET NO. S-204
NO.	BY:	DATE:	NO.	BY:	DATE:	TOTAL SHEETS 266
1			3			
2			4			

STR. #6

DRAWN BY : H. T. BARBOUR DATE : 8-19-11
CHECKED BY : D. A. GLADDEN DATE : 2-12

24-JUN-2013 15:04
K:\Structures\Plans\Bolley\STR5and6\TBARBOUR\Microstation\RIGHT LANE\superstructure\R2707B_SD_BR.dgn
tbarbour

NOTES

THE BARRIER RAIL IN EACH CONTINUOUS UNIT SHALL NOT BE CAST UNTIL ALL SLAB CONCRETE IN THAT UNIT HAS BEEN CAST AND HAS REACHED A MINIMUM COMPRESSIVE STRENGTH OF 3,000 PSI.

ALL REINFORCING STEEL IN BARRIER RAILS SHALL BE EPOXY COATED.

GROOVED CONTRACTION JOINTS, ½" IN DEPTH, SHALL BE TOOLED IN ALL EXPOSED FACES OF THE BARRIER RAIL AND IN ACCORDANCE WITH ARTICLE 825-10(B) OF THE STANDARD SPECIFICATIONS. THE CONTRACTION JOINT SHALL BE LOCATED AT EACH THIRD POINT BETWEEN BARRIER RAIL EXPANSION JOINTS. ONLY ONE CONTRACTION JOINT IS REQUIRED AT MIDPOINT OF BARRIER RAIL SEGMENTS LESS THAN 20 FEET IN LENGTH AND NO CONTRACTION JOINTS ARE REQUIRED FOR THOSE SEGMENTS LESS THAN 10 FEET IN LENGTH.

BAR TYPES

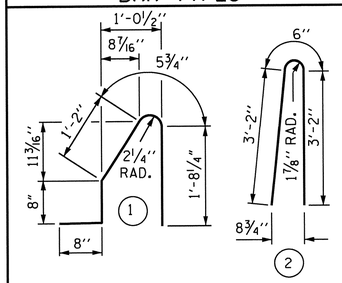

ALL BAR DIMENSIONS ARE OUT TO OUT

BILL OF MATERIAL

FOR CONCRETE BARRIER RAIL ONLY

BAR	NO.	SIZE	TYPE	LENGTH	WEIGHT
* S1	854	#5	1	4'-8"	4157
* S2	854	#5	2	6'-10"	6087
* B1	308	#5	STR	23'-8"	7603
* B2	88	#5	STR	7'-11"	727
* B3	44	#5	STR	13'-9'	631
* B4	44	#5	STR	14'-3'	654
* B5	22	#5	STR	10'-5'	239
* B6	22	#5	STR	11'-0'	252

* EPOXY COATED REINFORCING STEEL	20350 LBS.
CLASS AA CONCRETE	116.9 CU. YDS.
CONCRETE BARRIER RAIL	859.85 LIN. FT.

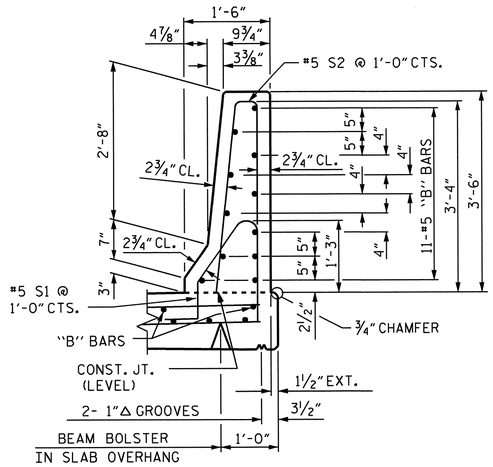

SECTION THRU RAIL

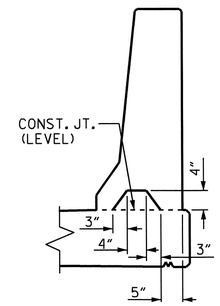

SECTION S-S

AT DAM IN OPEN JOINT
(THIS IS TO BE USED ONLY WHEN SLIP FORM IS USED)

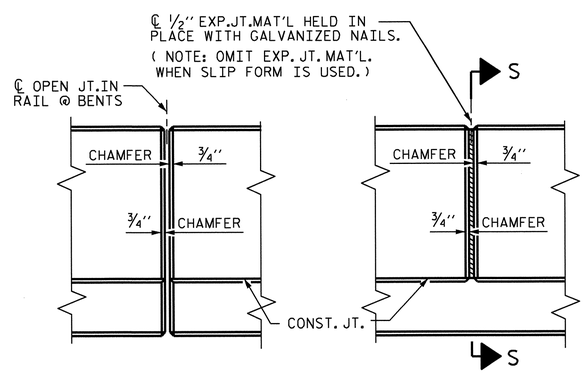

ELEVATION AT EXPANSION JOINTS

BARRIER RAIL DETAILS

PROJECT NO. R-2707B
CLEVELAND COUNTY
STATION: 340+70.00-L-

SHEET 2 OF 2

STATE OF NORTH CAROLINA
DEPARTMENT OF TRANSPORTATION
RALEIGH

CONCRETE BARRIER RAIL (RIGHT LANE)

NORTH CAROLINA PROFESSIONAL SEAL 15825 ENGINEER D. KL APPENBACH
6-27-2013

REVISIONS						SHEET NO. S-205
NO.	BY:	DATE:	NO.	BY:	DATE:	TOTAL SHEETS 266
1			3			
2			4			

ASSEMBLED BY : H. T. BARBOUR		DATE : 8-19-11	
CHECKED BY : D. A. GLADDEN		DATE : 2-12	
DRAWN BY : ARB 5/87	REV. 10/17/00	RWW/LES	
CHECKED BY : SJD 9/87	REV. 5/7/03R	RWW/JTE	
	REV. 5/1/06R	TLA/GM	

STR. #6 STD. NO. CBR1 (SHT 3)

24-JUN-2013 15:04
K:\Structures\Plans\Bailey\STR5and6\TBARBOUR\Microstation\RIGHT LANE\superstructure\R2707B_SD_BR.dgn
tbarbour

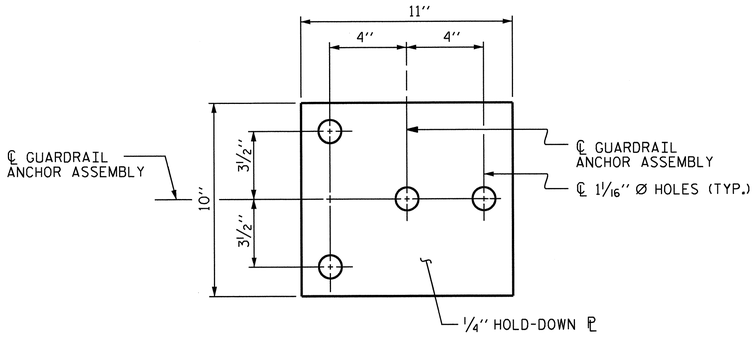

PLAN

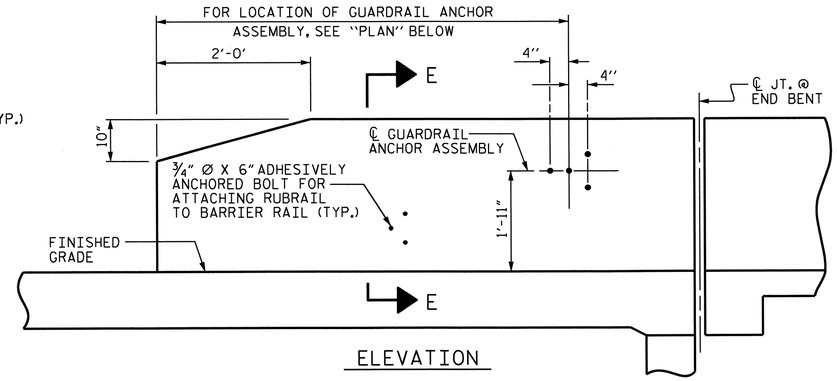

ELEVATION

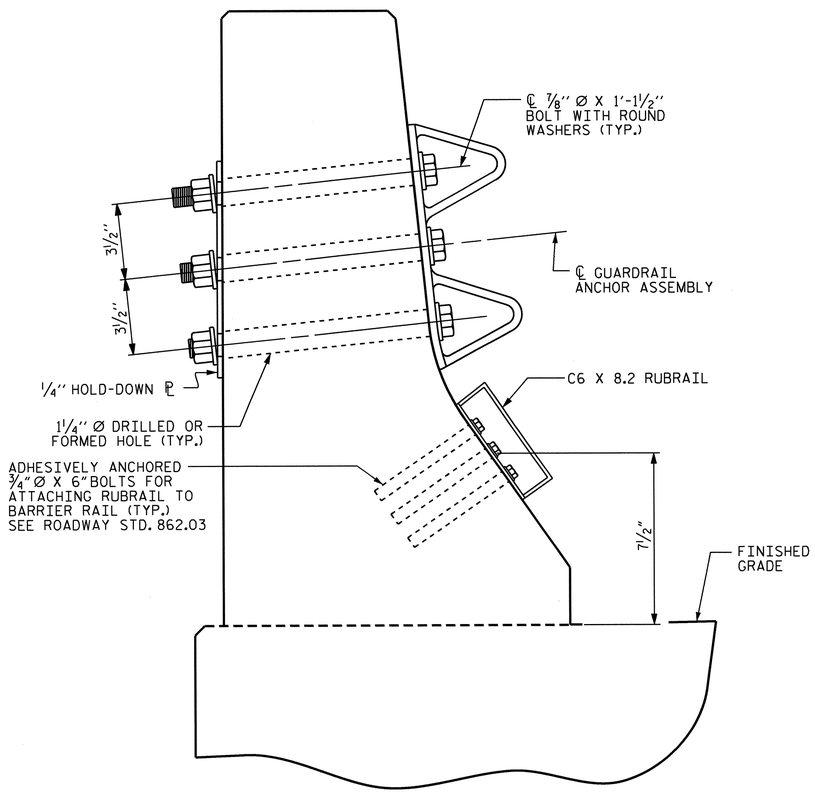

SECTION E-E

GUARDRAIL ANCHOR ASSEMBLY DETAILS

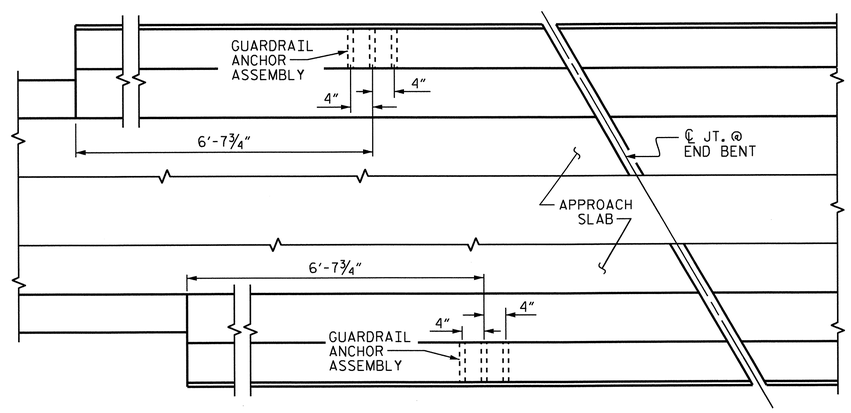

PLAN

LOCATION OF ANCHORS FOR GUARDRAIL

END BENT #1 SHOWN, END BENT #2 SIMILAR.

NOTES

THE GUARDRAIL ANCHOR ASSEMBLY SHALL CONSIST OF A 1/4'' HOLD-DOWN PLATE AND 4 - 7/8'' Ø BOLTS WITH NUTS AND WASHERS, RUBRAIL, AND ADHESIVELY ANCHORED BOLTS.

THE HOLD-DOWN PLATE SHALL CONFORM TO AASHTO M270 GRADE 36. AFTER FABRICATION, THE HOLD-DOWN PLATE SHALL BE HOT-DIP GALVANIZED IN ACCORDANCE WITH AASHTO M111.

BOLTS SHALL CONFORM TO THE REQUIREMENTS OF ASTM A307 AND NUTS SHALL CONFORM TO THE REQUIREMENTS OF AASHTO M291. BOLTS, NUTS AND WASHERS SHALL BE GALVANIZED. (AT THE CONTRACTOR'S OPTION, STAINLESS STEEL BOLTS, NUTS AND WASHERS MAY BE USED AS AN ALTERNATE FOR THE 7/8'' Ø GALVANIZED BOLTS, NUTS AND WASHERS. THEY SHALL CONFORM TO OR EXCEED THE MECHANICAL REQUIREMENTS OF ASTM A307. THE USE OF THIS ALTERNATE SHALL BE APPROVED BY THE ENGINEER.)

THE GUARDRAIL ANCHOR ASSEMBLY IS REQUIRED AT ALL POINTS WHERE APPROACH GUARDRAIL IS TO BE ATTACHED TO THE END OF BARRIER RAIL. FOR POINTS OF ATTACHMENT, SEE SKETCH.

AFTER INSTALLATION, THE EXPOSED THREAD OF THE BOLT SHALL BE BURRED WITH A SHARP POINTED TOOL.

THE COST OF THE GUARDRAIL ANCHOR ASSEMBLY SHALL BE INCLUDED IN THE UNIT CONTRACT PRICE BID FOR CONCRETE BARRIER RAIL.

THE 1 1/4'' Ø HOLES SHALL BE FORMED OR DRILLED WITH A CORE BIT. IMPACT TOOLS WILL NOT BE PERMITTED. ANY CONCRETE DAMAGED BY THIS WORK SHALL BE REPAIRED TO THE SATISFACTION OF THE ENGINEER.

THE C6 X 8.2 RUBRAIL IS TO BE ADHESIVELY ANCHORED TO THE RAIL USING THREE 3/4" Ø X 6" BOLTS WITH WASHERS. LEVEL ONE FIELD TESTING IS REQUIRED, AND THE YIELD LOAD OF THE 3/4" Ø BOLT IS 12 KIPS. FOR ADHESIVELY ANCHORED ANCHOR BOLTS OR DOWELS, SEE STANDARD SPECIFICATIONS. SEE ROADWAY STANDARD 862.03 FOR DETAILS AND LOCATION OF THE RUBRAIL.

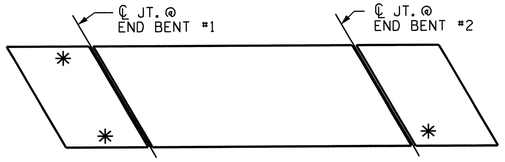

SKETCH SHOWING POINTS OF ATTACHMENTS

✳ DENOTES GUARDRAIL ANCHOR ASSEMBLY

PROJECT NO. R-2707B
CLEVELAND COUNTY
STATION: 340+70.00-L-

STATE OF NORTH CAROLINA
DEPARTMENT OF TRANSPORTATION
RALEIGH

GUARDRAIL ANCHORAGE FOR BARRIER RAIL (RIGHT LANE)

NORTH CAROLINA PROFESSIONAL SEAL 15825 BRIDGE ENGINEER D. KLAPPENBACH
6-27-2013

REVISIONS							SHEET NO. S-206
NO.	BY:	DATE:	NO.	BY:	DATE:		TOTAL SHEETS 266
1			3				
2			4				

ASSEMBLED BY : H. T. BARBOUR		DATE :	8-15-11
CHECKED BY : D. A. GLADDEN		DATE :	2-12
DRAWN BY : TLA 5/06	REV. 10/1/11		MAA/GM
CHECKED BY : GM 5/06	REV. 7/12		MAA/GM
	REV. 10/12		MAA/GM

24-JUN-2013 15:07
K:\Structures\Plans\Bailey\STR5and6\TBARBOUR\Microstation\RIGHT LANE\superstructure\R2707B_SD_GR.dgn
tbarbour

STR. #6

STD. NO. GRA2
(SHT 3a)

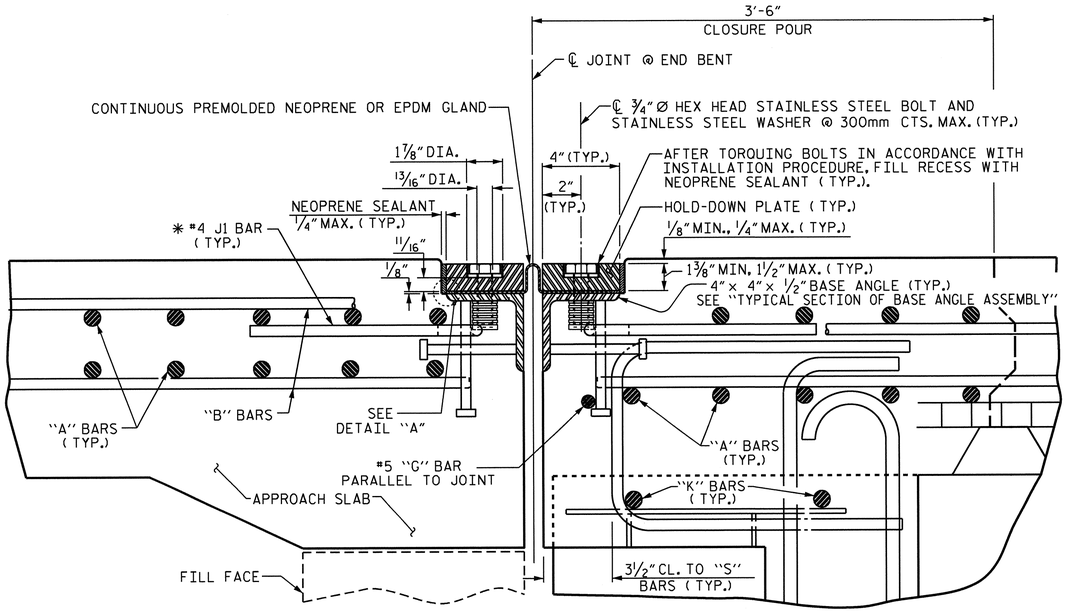

EXPANSION JOINT DETAILS

SECTION NORMAL TO JOINT -- PRESTRESSED GIRDER SUPERSTRUCTURE
END BENT #1 SHOWN, END BET #2 SIMILAR

⁎ THE QUANTITY OF #4 J1 BARS ON THE BILL OF MATERIAL IS BASED ON 1'-0" CENTERS. J1 BARS SHALL BE PLACED AT EACH VERTICAL STUD ANCHOR BOLT. IN THE EVENT THAT THE NUMBER OF VERTICAL STUD ANCHORS EXCEEDS THE NUMBER OF J1 BARS SPECIFIED, ADDITIONAL J1 BARS WILL NOT BE REQUIRED.

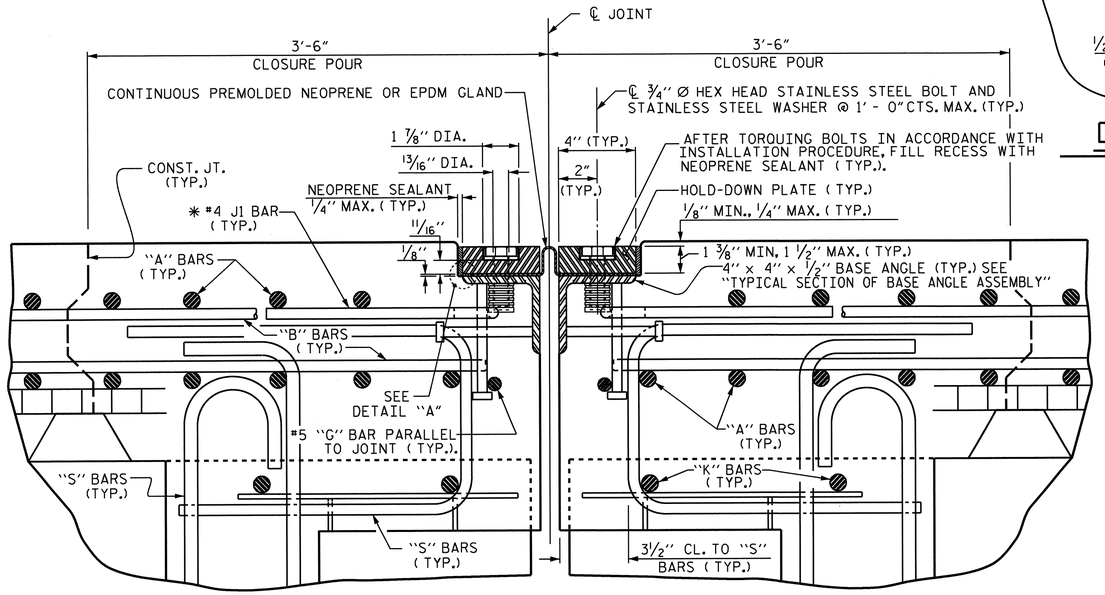

EXPANSION JOINT DETAIL @ BENT #2

SECTION NORMAL TO JOINT -- PRESTRESSED GIRDER SUPERSTRUCTURE

⁎ THE QUANTITY OF #4 J1 BARS ON THE BILL OF MATERIAL IS BASED ON 1'-0" CENTERS. J1 BARS SHALL BE PLACED AT EACH VERTICAL STUD ANCHOR BOLT. IN THE EVENT THAT THE NUMBER OF VERTICAL STUD ANCHORS EXCEEDS THE NUMBER OF J1 BARS SPECIFIED, ADDITIONAL J1 BARS WILL NOT BE REQUIRED.

INSTALLATION PROCEDURE

1. A TEMPLATE OR OTHER SUITABLE DEVICE SHALL BE USED TO FORM THE TOP OF THE EXPANSION JOINT SEAL BLOCKOUT TO THE PROPER DEPTH AND WIDTH. THE TEMPLATE SHALL BE 4⅛" TO 4¼" WIDE AND OF SUCH THICKNESS AS TO PROVIDE FOR CORRECT FINAL ELEVATION OF TOP OF HOLD-DOWN PLATES. THE TEMPLATE SHALL BE ATTACHED TO THE BASE ANGLE ASSEMBLY WITH THE ¾"Ø HEX HEAD BOLTS PROVIDED FOR THE HOLD-DOWN PLATES. A 1"Ø HOLE SHALL BE PROVIDED IN THE TEMPLATE CENTERED OVER EACH WEEP HOLE IN THE 4" X 4" X ½" BASE ANGLE. OTHER METHODS OF INSURING DRAINAGE THROUGH WEEP HOLES MAY BE EMPLOYED SUBJECT TO ENGINEER'S APPROVAL.
2. AFTER THE CONCRETE HAS BEEN CAST ON BOTH SIDES OF THE JOINT, REMOVE THE TEMPLATE. THOROUGHLY CLEAN THE BOLT HOLES AND THE ANGLE PLATE. REMOVE ANY EXCESS CONCRETE THAT COMES OUT OF THE WEEP HOLES. ANY DAMAGED STEEL SHALL BE COATED WITH A MINIMUM THICKNESS OF 4 DRY MILS OF ZINC-RICH PAINT IN ACCORDANCE WITH THE STANDARD SPECIFICATIONS.
3. LAY THE GLAND ON THE BASE ANGLE AND FIELD MARK THE GLAND FOR THE BOLT HOLES. HOLES IN THE GLAND SHALL BE PUNCHED ⅞" IN DIAMETER WITH A HAND PUNCH.
4. IN ORDER TO CHECK FOR PROPER ALIGNMENT, PLACE THE GLAND AND HOLD-DOWN PLATES ON THE BASE ANGLE. DO NOT APPLY NEOPRENE SEALANT. BOLT THE HOLD-DOWN PLATES TO THE BASE ANGLE BUT DO NOT TIGHTEN. THE ENGINEER SHALL INSPECT THE JOINT SEAL DEVICE FOR PROPER ALIGNMENT.
5. AFTER INSPECTION, REMOVE THE HOLD-DOWN PLATES AND GLAND. APPLY NEOPRENE SEALANT TO THE BASE ANGLE IN ACCORDANCE WITH THE "INSTALLATION SKETCH". PLACE GLAND AND HOLD-DOWN PLATES ON THE BASE ANGLE. BOLT THE HOLD-DOWN PLATES TO THE BASE ANGLE ASSEMBLY AND TOROUE THE BOLTS TO 88 FT-LBS WITH A TOROUE WRENCH. CHECK THE TOROUE AFTER THREE (3) HOURS AND, IF NECESSARY, RETIGHTEN TO 88 FT-LBS. A FINAL CHECK SHALL BE MADE AT SEVEN (7) DAYS. TOROUE SHALL NOT BE LESS THAN 80 FT-LBS AFTER SEVEN (7) DAYS.
6. AFTER PROPER TOROUING, CLEAN THE BOLT HOLE RECESSES AND THE RECESS BETWEEN THE JOINT SEAL DEVICE AND CONCRETE, COMPLETELY FILL THESE RECESSES WITH NEOPRENE SEALANT.

GENERAL NOTES

1. FOR EXPANSION JOINT SEALS, SEE SPECIAL PROVISIONS.
2. ALL PLATES AND ANGLES SHALL CONFORM TO AASHTO M270 GRADE 36 STEEL OR APPROVED EQUAL. ALL HOLD-DOWN BOLTS SHALL CONFORM TO ASTM F593 ALLOY 304 STAINLESS STEEL AND WASHERS SHALL CONFORM TO ASTM F844 EXCEPT THEY SHALL BE MADE FROM ALLOY 304 STAINLESS STEEL. ALL STUD ANCHORS SHALL CONFORM TO AASHTO M169, GRADES 1010 THRU 1020 OR APPROVED EQUAL. ALL CONCRETE INSERTS SHALL BE CLOSED END AND SHALL CONFORM TO AASHTO M169, GRADE 12L14. TENSILE CAPACITY SHALL BE 3000 LBS. MIN.
3. A PREMOLDED CORRUGATED OR NON-CORRUGATED GLAND SHALL BE USED FOR JOINTS SKEWED BETWEEN 50° THRU 130°. FOR JOINTS SKEWED LESS THAN 50° OR MORE THAN 130°, ONLY A CORRUGATED GLAND SHALL BE USED.
4. CLOSED END FERRULES AND STUD ANCHORS SHALL BE SHOP WELDED AND ALL HOLES SHALL BE SHOP DRILLED AS SHOWN ON PLANS. STUD ANCHORS SHALL BE ELECTRIC ARC END WELDED WITH COMPLETE FUSION.
5. SURFACES COMING IN CONTACT WITH NEOPRENE SHALL BE GROUND SMOOTH PRIOR TO METALLIZING.
6. UPON COMPLETION OF SHOP FABRICATION, THE HOLD DOWN PLATE AND BASE ANGLE ASSEMBLY, AS SHOWN IN THE " TYPICAL SECTION OF BASE ANGLE ASSEMBLY", SHALL BE METALLIZED. SEE SPECIAL PROVISION FOR THERMAL SPRAYED COATINGS (METALLIZATION).
7. BASE ANGLE ASSEMBLY SHALL BE CONTINUOUS FOR THE LENGTH OF THE JOINT. AT CROWN BREAKS, THE ENDS OF THE BASE ANGLE ASSEMBLY SHALL BE CUT PARALLEL TO THE BRIDGE CENTERLINE FOR SKEWS LESS THAN 80° AND GREATER THAN 100°. FINISHED WELD SHALL BE GROUND SMOOTH AND COATED WITH A MINIMUM THICKNESS OF 4 DRY MILS OF ZINC-RICH PAINT IN ACCORDANCE WITH THE STANDARD SPECIFICATIONS.
8. FIELD SPLICES OF HOLD-DOWN PLATES SHALL BE KEPT TO A MINIMUM. CONTRACTOR SHALL FURNISH DETAILED PLANS SHOWING PROPOSED SPLICE LOCATIONS FOR APPROVAL. HOLD-DOWN PLATES SHALL NOT EXCEED 20' LENGTHS UNLESS APPROVED BY THE ENGINEER.
9. NO ALTERNATE JOINT DETAILS SHALL BE PERMITTED IN LIEU OF THOSE SHOWN ON THESE PLANS.
10. THE CONTRACTOR MAY, AT HIS OPTION, USE ADHESIVELY ANCHORED ANCHOR BOLTS IN PLACE OF CONCRETE INSERTS FOR COVER PLATES. THE YIELD LOAD OF THE ¾"Ø BOLT IS 10 KIPS. FIELD TESTING OF THE ADHESIVE BONDING SYSTEM IS NOT REQUIRED.

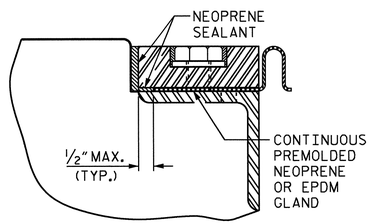

DETAIL "A"

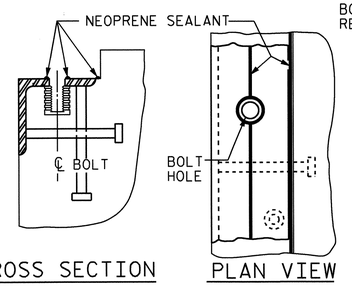

CROSS SECTION PLAN VIEW

INSTALLATION SKETCH

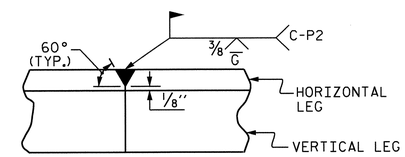

DETAIL- FIELD WELD SPLICE OF BASE ANGLE

MOVEMENT AND SETTING AT JOINT					
BENT NO.	SKEW ANGLE TO TANGENT	TOTAL MOVEMENT (ALONG ℄ RDWY)	PERPENDICULAR JOINT OPENING AT 45° F	PERPENDICULAR JOINT OPENING AT 60° F	PERPENDICULAR JOINT OPENING AT 90° F
END BENT #1	46°-56'-08"	¾"	1⅜"	1 5/16"	1⅛"
BENT #2	45°-07'-17"	1¾"	1⅞"	1 11/16"	1¼"
END BENT #2	42°-36'-02"	1 1/16"	1½"	1⅜"	1⅛"

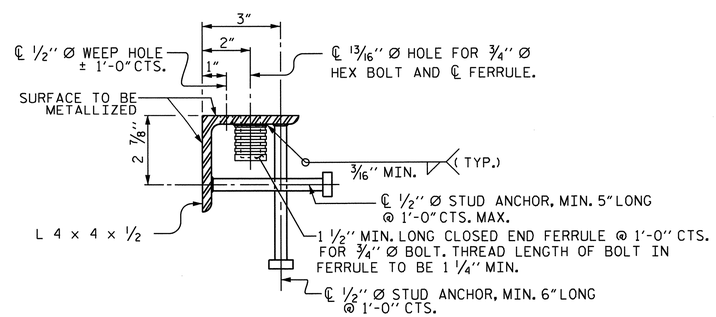

TYPICAL SECTION OF BASE ANGLE ASSEMBLY

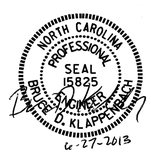

PROJECT NO. R-2707B
CLEVELAND COUNTY
STATION: 340+70.00-L-

SHEET 1 OF 2

STATE OF NORTH CAROLINA
DEPARTMENT OF TRANSPORTATION
RALEIGH

EXPANSION JOINT SEAL DETAILS (RIGHT LANE)

REVISIONS							SHEET NO. S-207
NO.	BY:	DATE:	NO.	BY:	DATE:		TOTAL SHEETS 266
1			3				
2			4				

ASSEMBLED BY : H. T. BARBOUR	DATE : 8-15-11			
CHECKED BY : D. A. GLADDEN	DATE : 2-12			
DRAWN BY : REK 9/87	REV. 5/7/03R RWW/JTE	DESIGN ENGINEER OF RECORD: B. A. DUKE DATE : 5-13		
CHECKED BY : CRK 10/87	REV. 5/1/06R TLA/GM			
	REV. 10/1/11 MAA/GM			

14-MAY-2013 09:07
K:\Structures\Plans\Bailey\STR5and6\TBARBOUR\Microstation\RIGHT LANE\superstructure\R2707B_SD_JS.dgn
tbarbour

STR. #6 STD. NO. EJS1 (SHT 2)

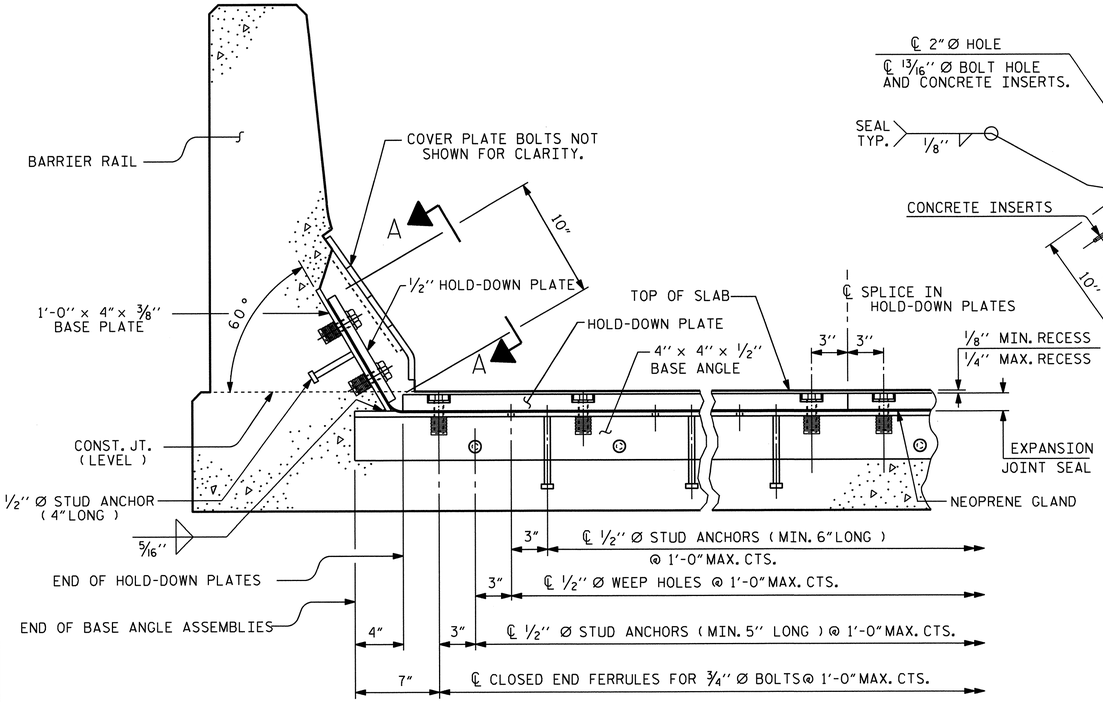

SECTION THRU RAIL NORMAL TO JOINT

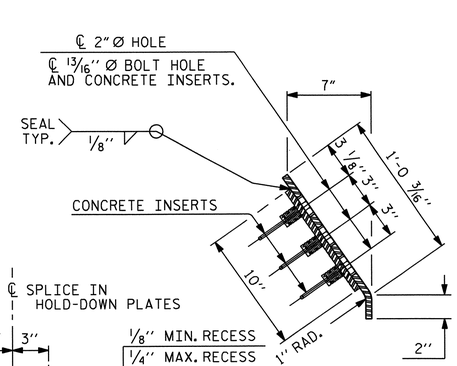

END VIEW

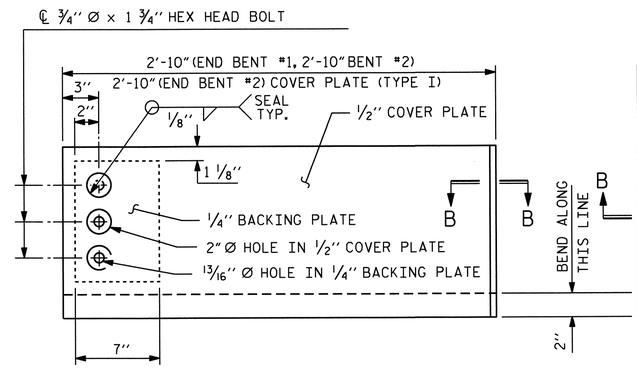

TYPE I - ELEVATION VIEW

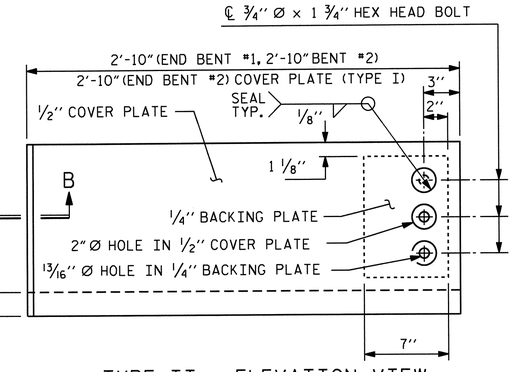

TYPE II - ELEVATION VIEW

COVER PLATE DETAILS

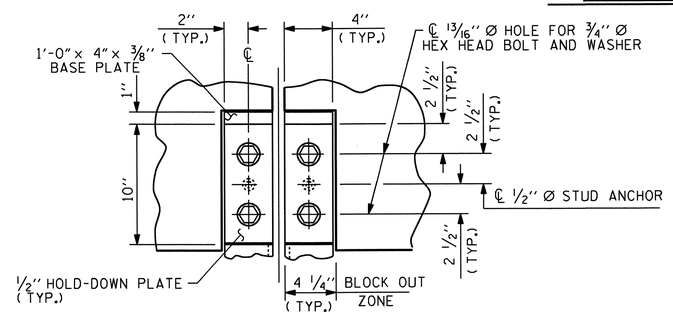

SECTION A - A

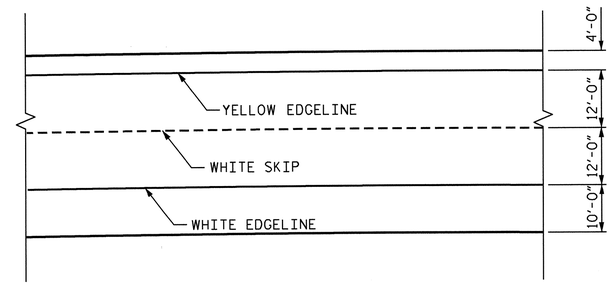

PAVEMENT MARKING ALIGNMENT

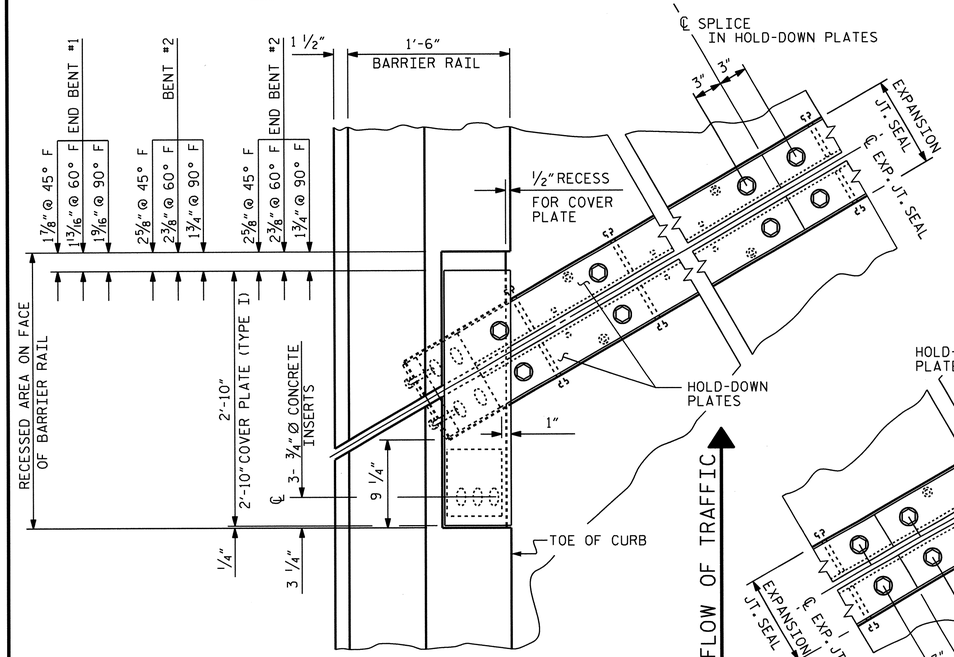

PLAN OF EXPANSION JOINT SEAL - LEFT SIDE

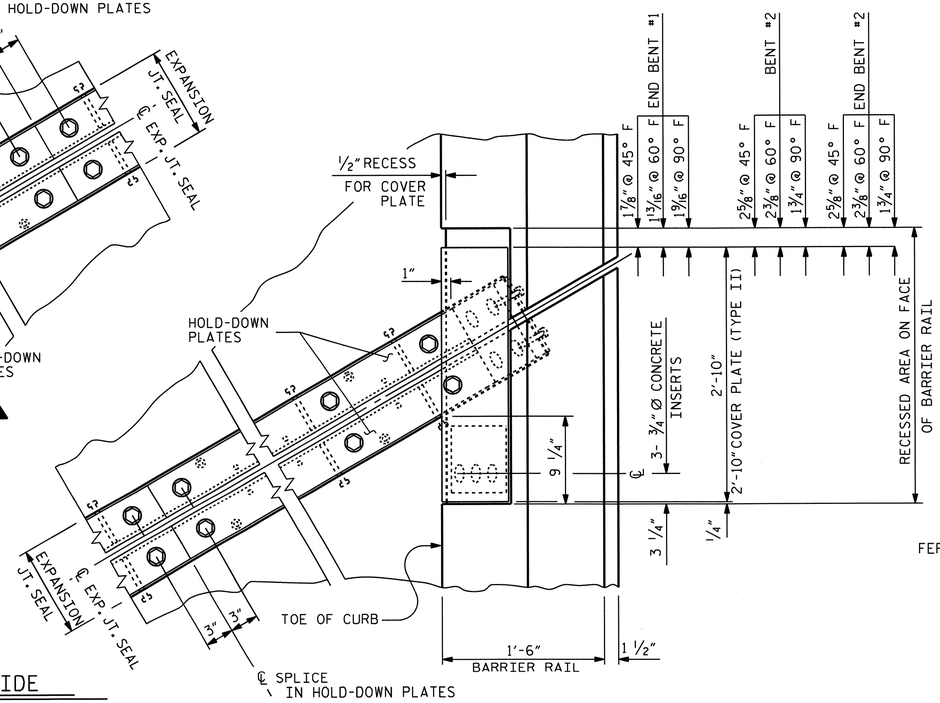

PLAN OF EXPANSION JOINT SEAL - RIGHT SIDE

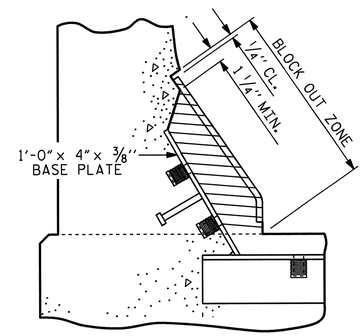

BLOCK OUT DETAIL

SEE "SECTION A - A" FOR OTHER DETAILS.

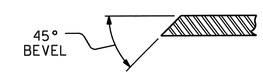

SECTION B - B

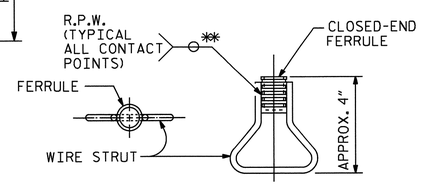

PLAN ELEVATION

CONCRETE INSERT

** EACH WELDED ATTACHMENT OF WIRE TO FERRULE SHALL DEVELOP THE TENSILE STRENGTH OF THE WIRE.

NORTH CAROLINA PROFESSIONAL SEAL 15825 ENGINEER BRUCE A. KLAPPENBACH 6-27-2013

PROJECT NO. R-2707B

CLEVELAND COUNTY

STATION: 340+70.00-L-

SHEET 2 OF 2

STATE OF NORTH CAROLINA
DEPARTMENT OF TRANSPORTATION
RALEIGH

EXPANSION JOINT SEAL DETAILS FOR BARRIER RAIL (RIGHT LANE)

REVISIONS								SHEET NO.
NO.	BY:	DATE:	NO.	BY:	DATE:			S-208
1			3					TOTAL SHEETS
2			4					266

ASSEMBLED BY :	H. T. BARBOUR	DATE :	8-05-11
CHECKED BY :	D. A. GLADDEN	DATE :	2-12

DRAWN BY : REK 9/87	REV. 7/17/98	RWW/LES	DESIGN ENGINEER OF RECORD:	
CHECKED BY : CRK 10/87	REV. 10/17/00	RWW/LES	B. A. DUKE	DATE : 5-13
	REV. 5/1/06	TLA/GM		

24-JUN-2013 15:09
K:\Structures\Plans\Bailey\STR5and6\TBARBOUR\Microstation\RIGHT LANE\superstructure\R2707B_SD_J5.dgn
tbarbour

STR. #6 STD. NO. EJS2

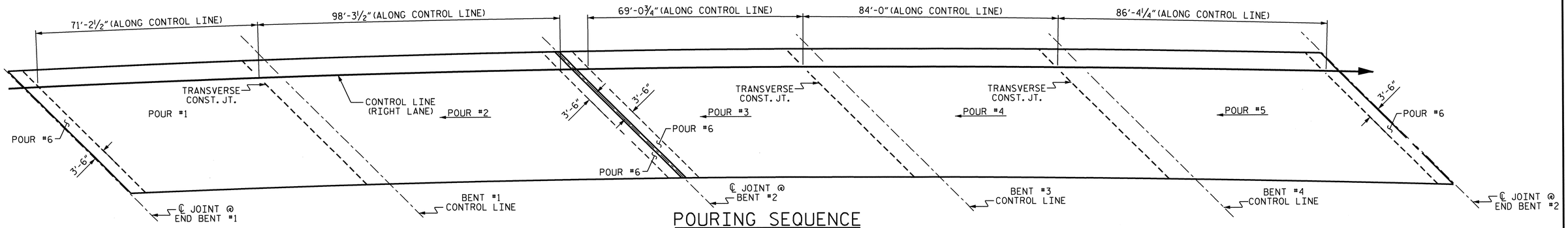

POURING SEQUENCE

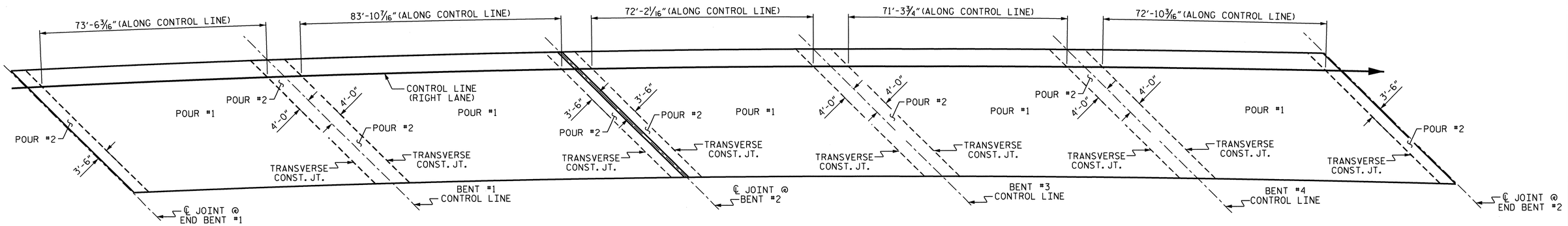

OPTIONAL POURING SEQUENCE

POUR #2 CANNOT BE STARTED UNTIL BOTH ADJACENT #1 POURS REACH A MINIMUM OF 3000 PSI.

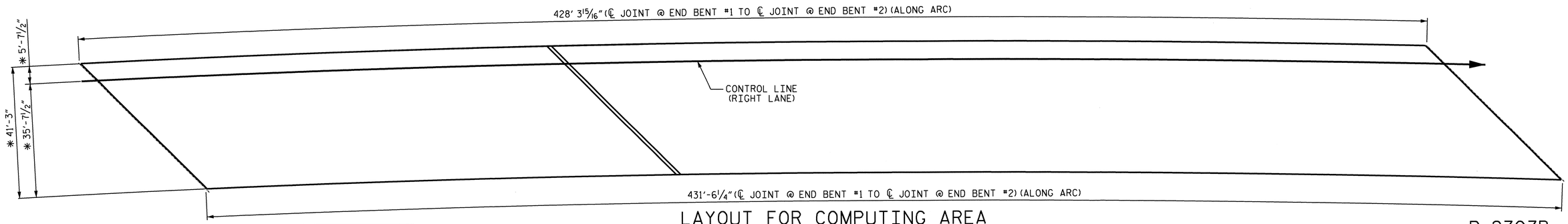

LAYOUT FOR COMPUTING AREA REINFORCED CONCRETE DECK SLAB SQ. FT. = 17734

* DIMENSIONS ARE TO CIRCLES CONCENTRIC WITH -L-.

SUPERSTRUCTURE REINFORCING STEEL LENGTHS ARE BASED ON THE FOLLOWING MINIMUM SPLICE LENGTHS

BAR SIZE	SUPERSTRUCTURE EXCEPT APPROACH SLABS, PARAPET, AND BARRIER RAIL		APPROACH SLABS		PARAPET AND BARRIER RAIL
	EPOXY COATED	UNCOATED	EPOXY COATED	UNCOATED	
#4	2'-0"	1'-9"	2'-0"	1'-9"	2'-9"
#5	2'-6"	2'-2"	2'-6"	2'-2"	3'-5"
#6	3'-0"	2'-7"	3'-10"	2'-7"	4'-4"
#7	5'-3"	3'-6"			
#8	6'-10"	4'-7"			

SUPERSTRUCTURE BILL OF MATERIAL

		CLASS AA CONCRETE	REINFORCING STEEL	EPOXY COATED REINFORCING STEEL
		(CU. YDS.)	(LBS.)	(LBS.)
SPANS A, B, C, D AND E	POUR #1	106.4		
	POUR #2	165.8		
	POUR #3	103.1		
	POUR #4	145.2		
	POUR #5	149.0		
	POUR #6	43.5		
TOTALS**		713.0	68086	67468

** QUANTITIES FOR BARRIER RAIL ARE NOT INCLUDED

GROOVING BRIDGE FLOORS

BRIDGE DECK	14,935	SQ.FT.
APPROACH SLAB	1,641	SQ.FT.
TOTAL	16,576	SQ.FT.

NORTH CAROLINA PROFESSIONAL SEAL 15828 ENGINEER BRYCE D. KLAPPENBACH 6-27-2012

PROJECT NO. R-2707B

CLEVELAND COUNTY

STATION: 340+70.00-L-

SHEET 1 OF 2

STATE OF NORTH CAROLINA
DEPARTMENT OF TRANSPORTATION
RALEIGH

SUPERSTRUCTURE BILL OF MATERIAL RIGHT LANE

REVISIONS						SHEET NO.
NO.	BY:	DATE:	NO.	BY:	DATE:	S-209
1			3			TOTAL SHEETS
2			4			266

STR. #6

DRAWN BY : H. T. BARBOUR DATE : 8-26-11
CHECKED BY : D. A. GLADDEN DATE : 2-12

25-JUN-2013 10:21
K:\Structures\Plans\Bailey\STR5and6\TBARBOUR\Microstation\RIGHT LANE\superstructure\R2707B_SD_BM.dgn
tbarbour

REINFORCING BAR SCHEDULE
SPANS A THRU E

BAR	NO.	SIZE	TYPE	LENGTH	WEIGHT
* A1	753	#5	STR	40'-11"	32135
A2	753	#5	STR	40'-11"	32135
*A101	3	#5	STR	39'-6"	124
*A102	3	#5	STR	38'-1"	119
*A103	3	#5	STR	36'-8"	115
*A104	3	#5	STR	35'-2"	110
*A105	3	#5	STR	33'-9"	106
*A106	3	#5	STR	32'-4"	101
*A107	3	#5	STR	30'-10"	96
*A108	3	#5	STR	29'-5"	92
*A109	3	#5	STR	28'-0"	88
*A110	3	#5	STR	26'-7"	83
*A111	3	#5	STR	25'-1"	78
*A112	3	#5	STR	23'-8"	74
*A113	3	#5	STR	22'-3"	70
*A114	3	#5	STR	20'-9"	65
*A115	3	#5	STR	19'-4"	60
*A116	3	#5	STR	17'-11"	56
*A117	3	#5	STR	16'-5"	51
*A118	3	#5	STR	15'-0"	47
*A119	3	#5	STR	13'-7"	43
*A120	3	#5	STR	12'-1"	38
*A121	3	#5	STR	10'-8"	33
*A122	3	#5	STR	9'-3"	29
*A123	3	#5	STR	7'-9"	24
*A124	3	#5	STR	6'-4"	20
*A125	3	#5	STR	4'-11"	15
*A126	3	#5	STR	3'-5"	11
*A127	9	#5	STR	2'-0"	19
*A128	3	#5	STR	39'-6"	124
*A129	3	#5	STR	38'-1"	119
*A130	3	#5	STR	36'-9"	115
*A131	3	#5	STR	35'-4"	111
*A132	3	#5	STR	33'-11"	106
*A133	3	#5	STR	32'-6"	102
*A134	3	#5	STR	31'-1"	97
*A135	3	#5	STR	29'-9"	93
*A136	3	#5	STR	28'-4"	89
*A137	3	#5	STR	26'-11"	84
*A138	3	#5	STR	25'-6"	80
*A139	3	#5	STR	24'-1"	75
*A140	3	#5	STR	22'-9"	71
*A141	3	#5	STR	21'-4"	67
*A142	3	#5	STR	19'-11"	62
*A143	3	#5	STR	18'-6"	58
*A144	3	#5	STR	17'-1"	53
*A145	3	#5	STR	15'-9"	49
*A146	3	#5	STR	14'-4"	45
*A147	3	#5	STR	12'-11"	40
*A148	3	#5	STR	11'-6"	36
*A149	3	#5	STR	10'-1"	32
*A150	3	#5	STR	8'-9"	27
* A151	3	#5	STR	7'-4"	23
* A152	3	#5	STR	5'-11"	19
* A153	3	#5	STR	4'-6"	14
* A154	3	#5	STR	3'-1"	10
* A155	12	#8	STR	7'-2"	230
A201	3	#5	STR	39'-6"	124
A202	3	#5	STR	38'-1"	119
A203	3	#5	STR	36'-8"	115

BAR	NO.	SIZE	TYPE	LENGTH	WEIGHT
A204	3	#5	STR	35'-2"	110
A205	3	#5	STR	33'-9"	106
A206	3	#5	STR	32'-4"	101
A207	3	#5	STR	30'-10"	96
A208	3	#5	STR	29'-5"	92
A209	3	#5	STR	28'-0"	88
A210	3	#5	STR	26'-7"	83
A211	3	#5	STR	25'-1"	78
A212	3	#5	STR	23'-8"	74
A213	3	#5	STR	22'-3"	70
A214	3	#5	STR	20'-9"	65
A215	3	#5	STR	19'-4"	60
A216	3	#5	STR	17'-11"	56
A217	3	#5	STR	16'-5"	51
A218	3	#5	STR	15'-0"	47
A219	3	#5	STR	13'-7"	43
A220	3	#5	STR	12'-1"	38
A221	3	#5	STR	10'-8"	33
A222	3	#5	STR	9'-3"	29
A223	3	#5	STR	7'-9"	24
A224	3	#5	STR	6'-4"	20
A225	3	#5	STR	4'-11"	15
A226	3	#5	STR	3'-5"	11
A227	3	#5	STR	2'-0"	6
A228	3	#5	STR	39'-6"	124
A229	3	#5	STR	38'-1"	119
A230	3	#5	STR	36'-9"	115
A231	3	#5	STR	35'-4"	111
A232	3	#5	STR	33'-11"	106
A233	3	#5	STR	32'-6"	102
A234	3	#5	STR	31'-1"	97
A235	3	#5	STR	29'-9"	93
A236	3	#5	STR	28'-4"	89
A237	3	#5	STR	26'-11"	84
A238	3	#5	STR	25'-6"	80
A239	3	#5	STR	24'-1"	75
A240	3	#5	STR	22'-9"	71
A241	3	#5	STR	21'-4"	67
A242	3	#5	STR	19'-11"	62
A243	3	#5	STR	18'-6"	58
A244	3	#5	STR	17'-1"	53
A245	3	#5	STR	15'-9"	49
A246	3	#5	STR	14'-4"	45
A247	3	#5	STR	12'-11"	40
A248	3	#5	STR	11'-6"	36
A249	3	#5	STR	10'-1"	32
A250	3	#5	STR	8'-9"	27
A251	3	#5	STR	7'-4"	23
A252	3	#5	STR	5'-11"	19
A253	3	#5	STR	4'-6"	14
A254	3	#5	STR	3'-1"	10
*A301	3	#5	STR	39'-7"	124
*A302	3	#5	STR	38'-3"	120
*A303	3	#5	STR	36'-11"	116
*A304	3	#5	STR	35'-6"	111
*A305	3	#5	STR	34'-2"	107
*A306	3	#5	STR	32'-10"	103
*A307	3	#5	STR	31'-6"	99
*A308	3	#5	STR	30'-2"	94
*A309	3	#5	STR	28'-10"	90
*A310	3	#5	STR	27'-6"	86
* A311	3	#5	STR	26'-1"	82
* A312	3	#5	STR	24'-9"	77
* A313	3	#5	STR	23'-5"	73

BAR	NO.	SIZE	TYPE	LENGTH	WEIGHT
*A314	3	#5	STR	22'-1"	69
*A315	3	#5	STR	20'-9"	65
*A316	3	#5	STR	19'-5"	61
*A317	3	#5	STR	18'-0"	56
*A318	3	#5	STR	16'-8"	52
*A319	3	#5	STR	15'-4"	48
*A320	3	#5	STR	14'-0"	44
*A321	3	#5	STR	12'-8"	40
*A322	3	#5	STR	11'-3"	35
*A323	3	#5	STR	9'-11"	31
*A324	3	#5	STR	8'-7"	27
*A325	3	#5	STR	7'-3"	23
*A326	3	#5	STR	5'-11"	19
*A327	3	#5	STR	4'-6"	14
*A328	3	#5	STR	3'-2"	10
*A329	3	#5	STR	39'-8"	124
*A330	3	#5	STR	38'-5"	120
*A331	3	#5	STR	37'-1"	116
*A332	3	#5	STR	35'-10"	112
*A333	3	#5	STR	34'-6"	108
*A334	3	#5	STR	33'-3"	104
*A335	3	#5	STR	31'-11"	100
*A336	3	#5	STR	30'-8"	96
*A337	3	#5	STR	29'-4"	92
*A338	3	#5	STR	28'-1"	88
*A339	3	#5	STR	26'-9"	84
*A340	3	#5	STR	25'-6"	80
*A341	3	#5	STR	24'-2"	76
*A342	3	#5	STR	22'-11"	72
*A343	3	#5	STR	21'-8"	68
*A344	3	#5	STR	20'-4"	64
*A345	3	#5	STR	19'-1"	60
*A346	3	#5	STR	17'-9"	56
*A347	3	#5	STR	16'-6"	52
*A348	3	#5	STR	15'-2"	47
*A349	3	#5	STR	13'-11"	44
*A350	3	#5	STR	12'-7"	39
* A351	3	#5	STR	11'-4"	35
* A352	3	#5	STR	10'-1"	32
* A353	3	#5	STR	8'-9"	27
* A354	3	#5	STR	7'-6"	23
* A355	3	#5	STR	6'-2"	19
* A356	3	#5	STR	4'-11"	15
* A357	3	#5	STR	3'-8"	11
* A358	3	#5	STR	2'-4"	7
A401	3	#5	STR	39'-7"	124
A402	3	#5	STR	38'-3"	120
A403	3	#5	STR	36'-11"	116
A404	3	#5	STR	35'-6"	111
A405	3	#5	STR	34'-2"	107
A406	3	#5	STR	32'-10"	103
A407	3	#5	STR	31'-6"	99
A408	3	#5	STR	30'-2"	94
A409	3	#5	STR	28'-10"	90
A410	3	#5	STR	27'-6"	86
A411	3	#5	STR	26'-1"	82
A412	3	#5	STR	24'-9"	77
A413	3	#5	STR	23'-5"	73
A414	3	#5	STR	22'-1"	69
A415	3	#5	STR	20'-9"	65
A416	3	#5	STR	19'-5"	61
A417	3	#5	STR	18'-0"	56
A418	3	#5	STR	16'-8"	52
A419	3	#5	STR	15'-4"	48
A420	3	#5	STR	14'-0"	44

BAR	NO.	SIZE	TYPE	LENGTH	WEIGHT
A421	3	#5	STR	12'-8"	40
A422	3	#5	STR	11'-3"	35
A423	3	#5	STR	9'-11"	31
A424	3	#5	STR	8'-7"	27
A425	3	#5	STR	7'-3"	23
A426	3	#5	STR	5'-11"	19
A427	3	#5	STR	4'-6"	14
A428	3	#5	STR	3'-2"	10
A429	3	#5	STR	39'-8"	124
A430	3	#5	STR	38'-5"	120
A431	3	#5	STR	37'-1"	116
A432	3	#5	STR	35'-10"	112
A433	3	#5	STR	34'-6"	108
A434	3	#5	STR	33'-3"	104
A435	3	#5	STR	31'-11"	100
A436	3	#5	STR	30'-8"	96
A437	3	#5	STR	29'-4"	92
A438	3	#5	STR	28'-1"	88
A439	3	#5	STR	26'-9"	84
A440	3	#5	STR	25'-6"	80
A441	3	#5	STR	24'-2"	76
A442	3	#5	STR	22'-11"	72
A443	3	#5	STR	21'-8"	68
A444	3	#5	STR	20'-4"	64
A445	3	#5	STR	19'-1"	60
A446	3	#5	STR	17'-9"	56
A447	3	#5	STR	16'-6"	52
A448	3	#5	STR	15'-2"	47
A449	3	#5	STR	13'-11"	44
A450	3	#5	STR	12'-7"	39
A451	3	#5	STR	11'-4"	35
A452	3	#5	STR	10'-1"	32
A453	3	#5	STR	8'-9"	27
A454	3	#5	STR	7'-6"	23
A455	3	#5	STR	6'-2"	19
A456	3	#5	STR	4'-11"	15
A457	3	#5	STR	3'-8"	11
A458	3	#5	STR	2'-4"	7
* B1	78	#4	STR	29'-9"	1550
B2	220	#5	STR	46'-10"	10746
* B3	117	#6	STR	23'-6"	4130
* B4	38	#6	STR	27'-0"	1541
* B5	117	#4	STR	22'-8"	1772
* B6	78	#4	STR	28'-9"	1498
* B7	39	#6	STR	59'-10"	3505
* B8	38	#6	STR	24'-11"	1422
* B9	39	#4	STR	27'-8"	721
* B10	117	#6	STR	22'-3"	3910
* B11	38	#6	STR	25'-3"	1441
* B12	78	#4	STR	28'-10"	1502
B13	275	#5	STR	52'-0"	14915
* G1	8	#5	STR	31'-7"	264
* J1	212	#4	8	1'-5"	201
* K1	16	#8	1	18'-9"	801
* K2	16	#8	2	27'-10"	1189
* K3	9	#6	STR	12'-9"	172
K4	30	#4	6	9'-7"	192
K5	30	#4	7	19'-2"	384
K6	6	#4	STR	12'-11"	52
K7	12	#4	STR	13'-5"	108
K8	6	#4	STR	13'-7"	54
K9	6	#4	STR	10'-4"	41

BAR TYPES

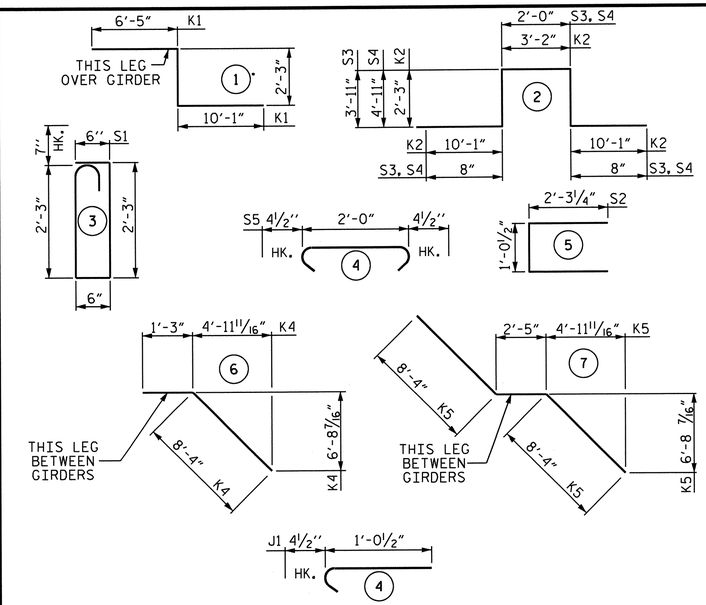

ALL BAR DIMENSIONS ARE OUT TO OUT

BAR	NO.	SIZE	TYPE	LENGTH	WEIGHT
K10	6	#4	STR	12'-8"	51
K11	12	#4	STR	13'-1"	105
K12	6	#4	STR	13'-4"	53
K13	6	#4	STR	10'-2"	41
K14	6	#4	STR	13'-6"	54
K15	12	#4	STR	14'-0"	112
K16	6	#4	STR	14'-3"	57
K17	6	#4	STR	10'-10"	43
*K18	18	#6	STR	13'-2"	356
*K19	9	#6	STR	13'-9"	186
* S1	156	#5	3	6'-1"	990
* S2	144	#4	5	5'-7"	537
S3	18	#4	2	11'-2"	134
S4	81	#4	2	13'-2"	712
S5	378	#4	4	2'-9"	694

REINFORCING STEEL = 68086 LBS.

* EPOXY COATED REINF. STEEL = 67468 LBS.

PROJECT NO. R-2707B

CLEVELAND COUNTY

STATION: 340+70.00-L-

SHEET 2 OF 2

STATE OF NORTH CAROLINA
DEPARTMENT OF TRANSPORTATION
RALEIGH

SUPERSTRUCTURE BILL OF MATERIAL RIGHT LANE

NORTH CAROLINA PROFESSIONAL SEAL 15825 ENGINEER BRUCE D. KLAPPENBACH
6-27-2013

REVISIONS								SHEET NO.
NO.	BY:	DATE:	NO.	BY:	DATE:			S-210
1			3					TOTAL SHEETS
2			4					266

DRAWN BY : H. T. BARBOUR DATE : 8-2-11
CHECKED BY : D. A. GLADDEN DATE : 2-12
DESIGN ENGINEER OF RECORD: - DATE : -

STR. #6

STD. NO. BOM2

NOTES

STIRRUPS IN CAP MAY BE SHIFTED AS NECESSARY TO CLEAR ANCHOR BOLTS.

FOR PILE SPLICE DETAILS, SEE END BENT SHEET 3 OF 3.

BACKWALL SHALL BE PLACED BEFORE APPLYING THE EPOXY PROTECTIVE COATING.

THE TOP SURFACE AREAS OF THE END BENT CAPS SHALL BE CURED IN ACCORDANCE WITH THE STANDARD SPECIFICATIONS EXCEPT THE MEMBRANE CURING COMPOUND METHOD SHALL NOT BE USED.

THE TOP SURFACE OF THE CAP EXCEPT THE BRIDGE SEAT BUILDUPS SHALL BE SLOPED TRANSVERSELY FROM THE FILL FACE TO THE BACK FACE AT THE RATE OF 2%.

THE CONCRETE IN THE SHADED AREA OF THE WING SHALL BE POURED AFTER THE BARRIER RAILS ARE CAST IF SLIP FORMING IS USED.

INSTALL THE 4"DIA. DRAIN PIPE THROUGH THE WING WALL AS REQUIRED FOR REINFORCED BRIDGE APPROACH FILLS. SEE THE ROADWAY PLANS. REINFORCING STEEL IN THE WING WALL MAY BE SHIFTED AS NECESSARY TO CLEAR THE DRAIN PIPE.

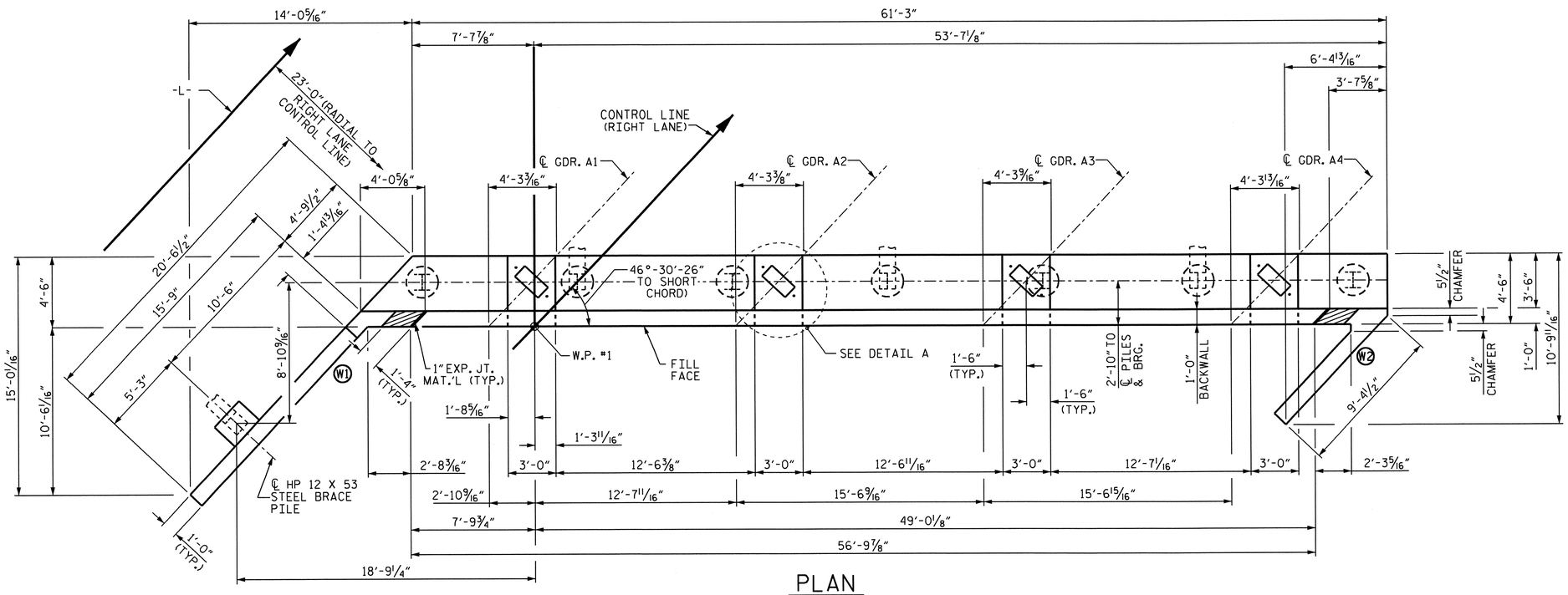

PLAN

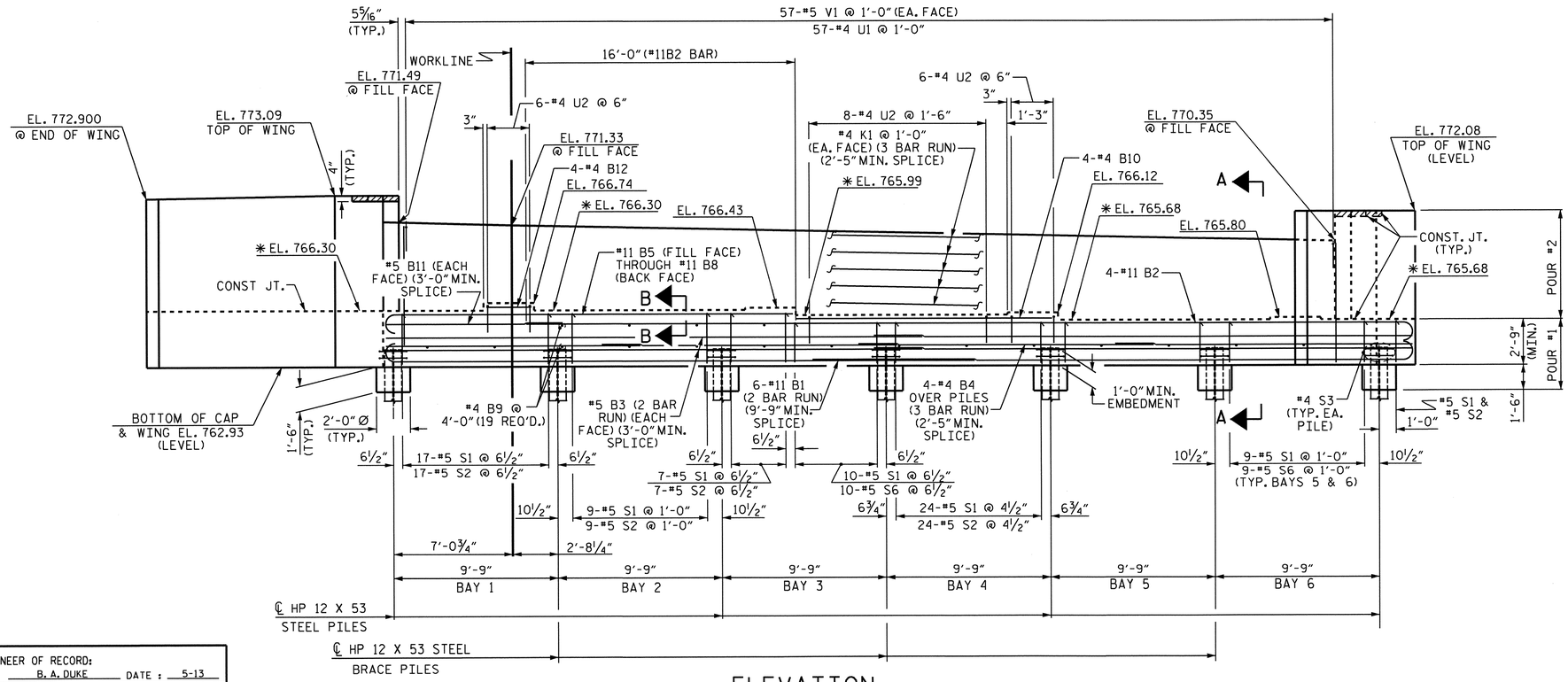

ELEVATION

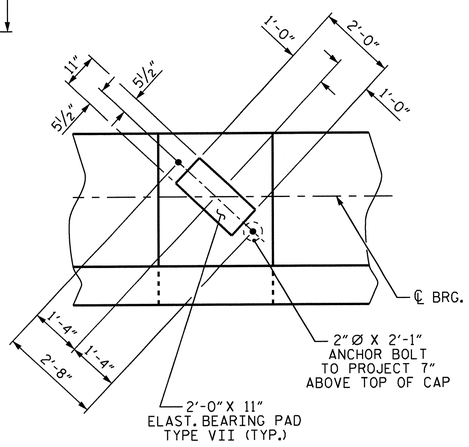

DETAIL A

(DIMENSIONS TYP. EA. BRG.)
(PILE NOT SHOWN FOR CLARITY)

PROJECT NO. R-2707B
CLEVELAND COUNTY
STATION: 340+70.00 -L-

SHEET 1 OF 3

STATE OF NORTH CAROLINA
DEPARTMENT OF TRANSPORTATION
RALEIGH

SUBSTRUCTURE END BENT #1 (RIGHT LANE)

NORTH CAROLINA PROFESSIONAL SEAL 15825 ENGINEER BRUCE A. DUKE
6-27-2013

REVISIONS						SHEET NO.
NO.	BY:	DATE:	NO.	BY:	DATE:	S-211
1			3			TOTAL SHEETS
2			4			266

STR. #6

DESIGN ENGINEER OF RECORD: B. A. DUKE DATE: 5-13
DRAWN BY: H. T. BARBOUR DATE: 4-26-12
CHECKED BY: D. A. GLADDEN DATE: 1-20-13

25-JUN-2013 08:52
K:\Structures\Plans\Bailey\STR5and6\TBARBOUR\Microstation\RIGHT LANE\substructure\R-2707B_SD_E*.dgn
tbarbour

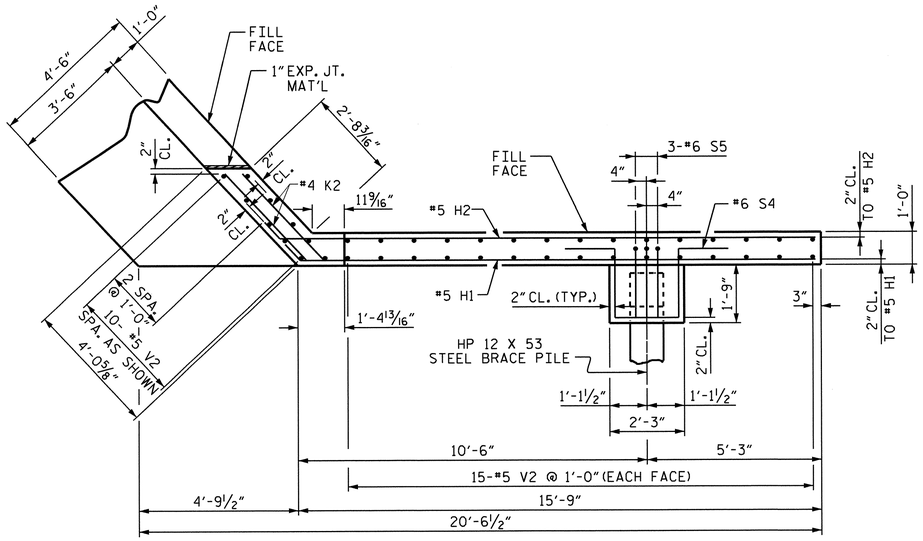

PLAN OF LEFT WING (W1)

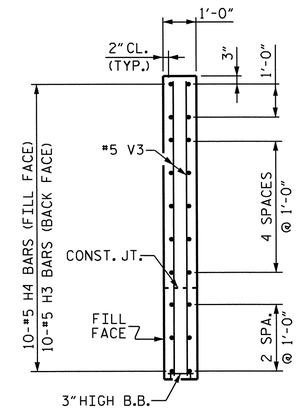

SECTION X-X

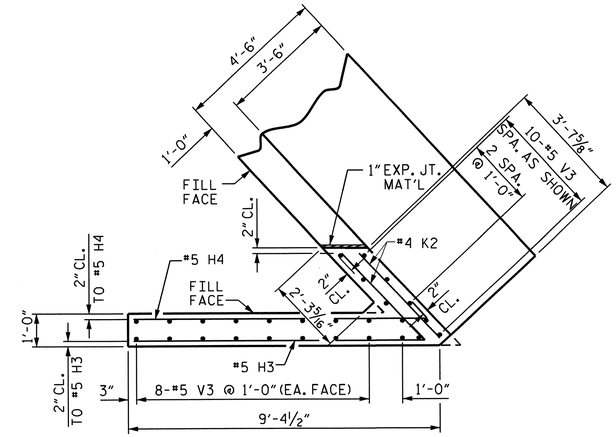

PLAN OF RIGHT WING (W2)

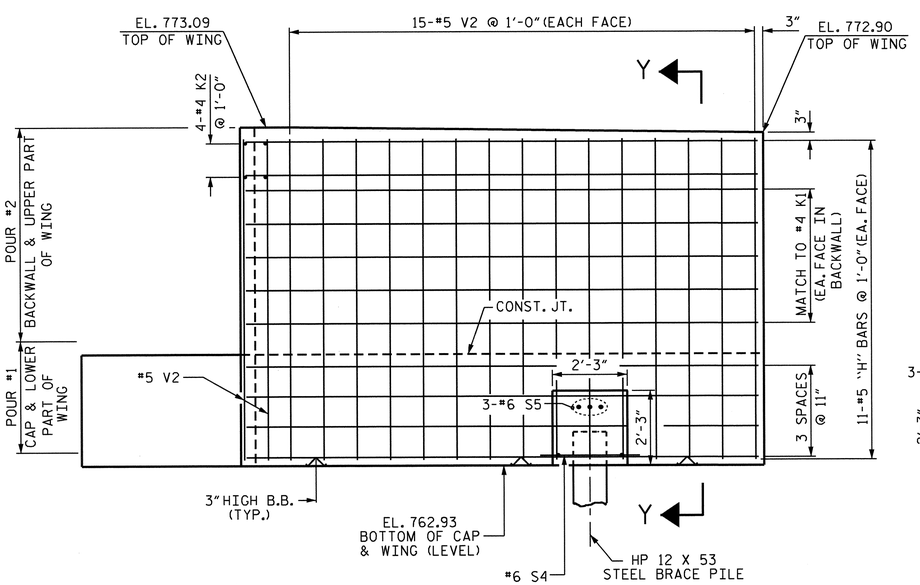

ELEVATION OF LEFT WING (W1)

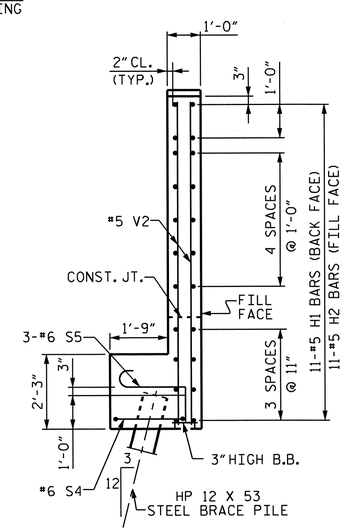

SECTION Y-Y

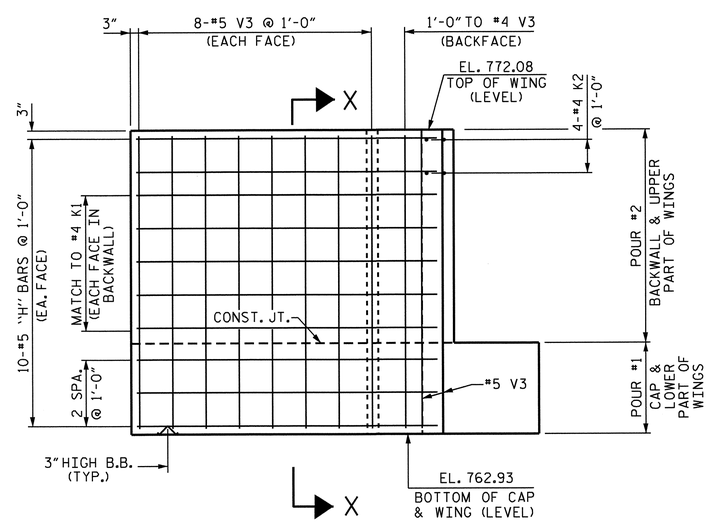

ELEVATION OF RIGHT WING (W2)

PROJECT NO. R-2707B

CLEVELAND COUNTY

STATION: 340+70.00 -L-

SHEET 2 OF 3

STATE OF NORTH CAROLINA
DEPARTMENT OF TRANSPORTATION
RALEIGH

SUBSTRUCTURE END BENT #1 (RIGHT LANE)

NORTH CAROLINA PROFESSIONAL SEAL 15825 ENGINEER BRYAN D. KLAPPENBACH

6-27-2013

REVISIONS						SHEET NO.
NO.	BY:	DATE:	NO.	BY:	DATE:	S-212
1			3			TOTAL SHEETS 266
2			4			

DESIGN ENGINEER OF RECORD: B. A. DUKE DATE: 5-13

DRAWN BY: H. T. BARBOUR DATE: 4-26-12

CHECKED BY: D. A. GLADDEN DATE: 1-20-13

25-JUN-2013 08:56
K:\Structures\Plans\Bailey\STR5and6\TBARBOUR\Microstation\RIGHT LANE\substructure\R-2707B_SD_E*.dgn
tbarbour

STR. #6

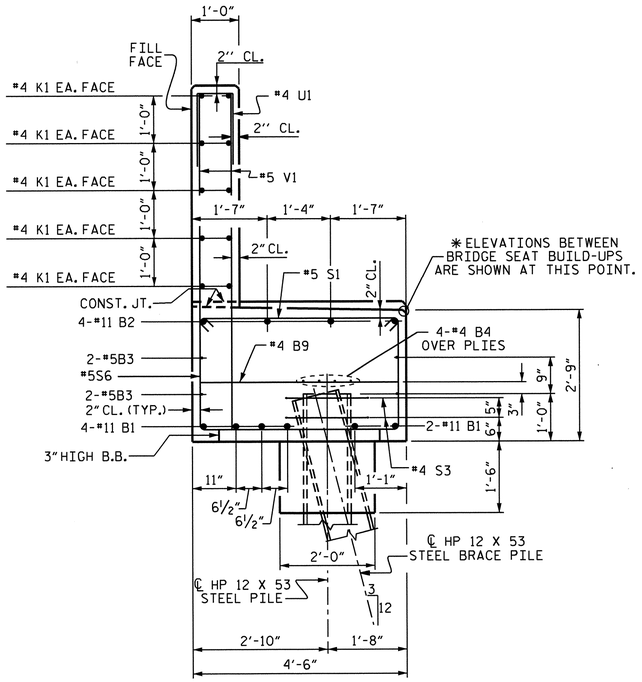

SECTION A-A

(SEE SHEET 1 OF 3)

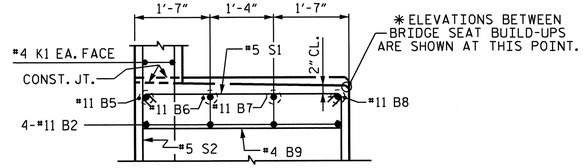

SECTION B-B

(SEE SHEET 1 OF 3)

BAR TYPES

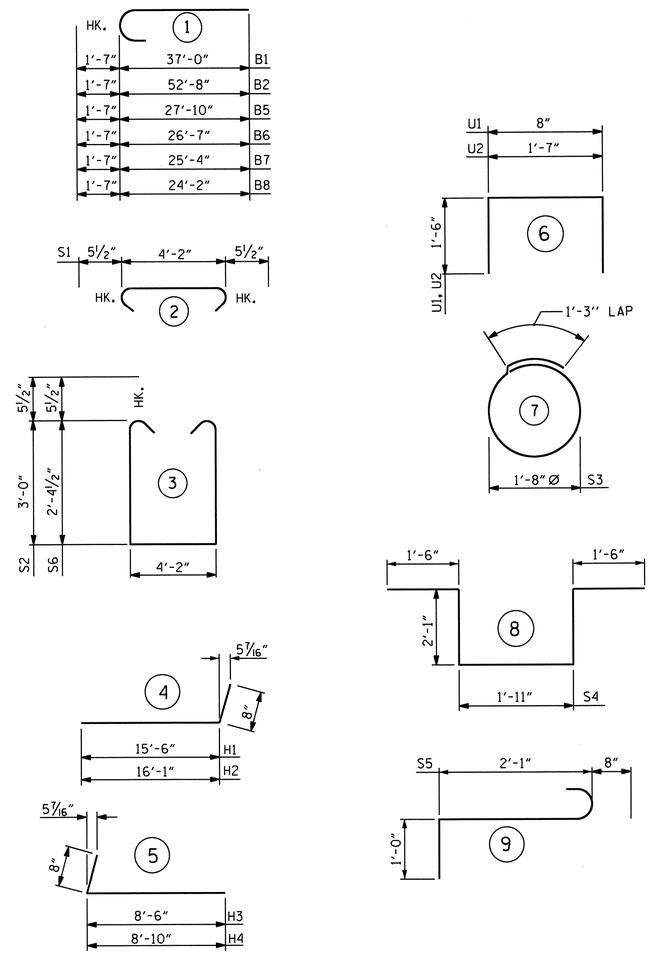

ALL BAR DIMENSIONS ARE OUT TO OUT.

BILL OF MATERIAL

END BENT #1

BAR	NO.	SIZE	TYPE	LENGTH	WEIGHT
B1	12	11	1	38'-7"	2460
B2	4	11	1	54'-3"	1153
B3	8	5	STR	33'-9"	282
B4	12	4	STR	22'-7"	181
B5	1	11	1	29'-5"	156
B6	1	11	1	28'-2"	150
B7	1	11	1	26'-11"	143
B8	1	11	1	25'-9"	137
B9	19	4	STR	4'-2"	53
B10	4	4	STR	15'-5"	41
B11	2	5	STR	15'-5"	32
B12	4	4	STR	2'-8"	7
H1	11	5	4	16'-2"	185
H2	11	5	4	16'-9"	192
H3	10	5	5	9'-2"	96
H4	10	5	5	9'-6"	99
K1	30	4	STR	23'-1"	463
K2	8	4	STR	3'-6"	19
S1	86	5	2	5'-1"	456
S2	33	5	3	11'-1"	381
S3	14	4	7	6'-6"	61
S4	1	6	8	9'-1"	14
S5	3	6	9	3'-9"	17
S6	53	5	3	9'-10"	544
U1	57	4	6	3'-8"	140
U2	20	4	6	7'-2"	96
V1	57	5	STR	7'-1"	421
V2	40	5	STR	9'-7"	400
V3	27	5	STR	8'-9"	246

REINFORCING STEEL LBS. 8625

CLASS A CONCRETE BREAKDOWN

POUR #1

CAP, LOWER PART OF WINGS, CONCRETE COLLARS & PILE CAP — 35.7 CU. YDS.

POUR #2

BACKWALL & UPPER PART OF WINGS — 16.8 CU. YDS.

CLASS A CONCRETE TOTAL — 52.5 CU. YDS.

HP 12 x 53 STEEL PILES

NO. 8 LIN. FT. 240

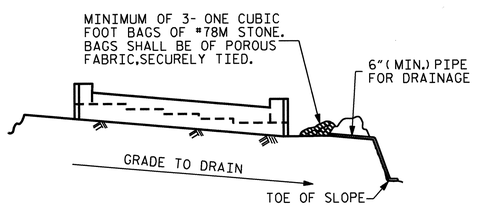

BAGGED STONE AND PIPE SHALL BE PLACED IMMEDIATELY AFTER COMPLETION OF END BENT EXCAVATION. PIPE MAY BE EITHER CONCRETE, CORRUGATED STEEL, CORRUGATED ALUMINUM ALLOY, OR CORRUGATED PLASTIC. PERFORATED PIPE WILL NOT BE ALLOWED.

BAGGED STONE SHALL REMAIN IN PLACE UNTIL THE ENGINEER DIRECTS THAT IT BE REMOVED. THE CONTRACTOR SHALL REMOVE AND DISPOSE OF SILT ACCUMULATIONS AT BAGGED STONE WHEN SO DIRECTED BY THE ENGINEER. BAGS SHALL BE REMOVED AND REPLACED WHENEVER THE ENGINEER DETERMINES THAT THEY HAVE DETERIORATED AND LOST THEIR EFFECTIVENESS.

NO SEPARATE PAYMENT WILL BE MADE FOR THIS WORK AND THE ENTIRE COST OF THIS WORK SHALL BE INCLUDED IN THE UNIT CONTRACT PRICE BID FOR THE SEVERAL PAY ITEMS.

TEMPORARY DRAINAGE AT END BENT

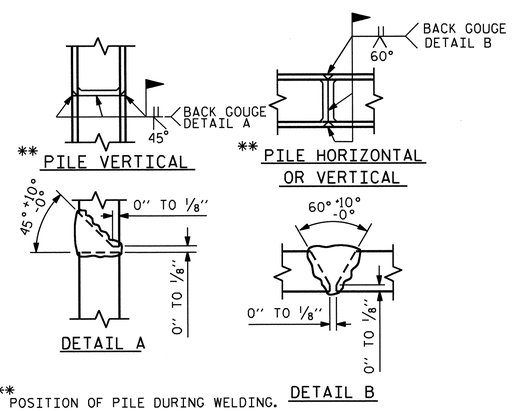

** POSITION OF PILE DURING WELDING.

PILE SPLICE DETAILS

PROJECT NO. R-2707B

CLEVELAND COUNTY

STATION: 340+70.00 -L-

SHEET 3 OF 3

STATE OF NORTH CAROLINA
DEPARTMENT OF TRANSPORTATION
RALEIGH

SUBSTRUCTURE
END BENT #1
(RIGHT LANE)

NORTH CAROLINA PROFESSIONAL SEAL 15829 ENGINEER D. KLAPPENBACH BRIDGE

6-27-2013

REVISIONS						SHEET NO.
NO.	BY:	DATE:	NO.	BY:	DATE:	S-213
1			3			TOTAL SHEETS
2			4			266

DESIGN ENGINEER OF RECORD: B. A. DUKE DATE: 5-13

DRAWN BY: H. T. BARBOUR DATE: 4-25-12

CHECKED BY: D. A. GLADDEN DATE: 1-20-13

NOTES

STIRRUPS IN CAP MAY BE SHIFTED AS NECESSARY TO CLEAR ANCHOR BOLTS.

THE CONTRACTOR'S ATTENTION IS CALLED TO THE FACT THAT THE LONGITUDINAL REINFORCEMENT FOR THE DRILLED PIERS IS DETAILED WITH 3 FEET OF EXTRA LENGTH.

ALL STEEL IN THE DRILLED PIERS IS INCLUDED IN THE PAY ITEMS FOR "REINFORCING STEEL" AND "SPIRAL COLUMN REINFORCING STEEL."

HOOKS ON V1 BARS MAY BE TURNED AS NECESSARY FOR PLACING REINFORCING STEEL.

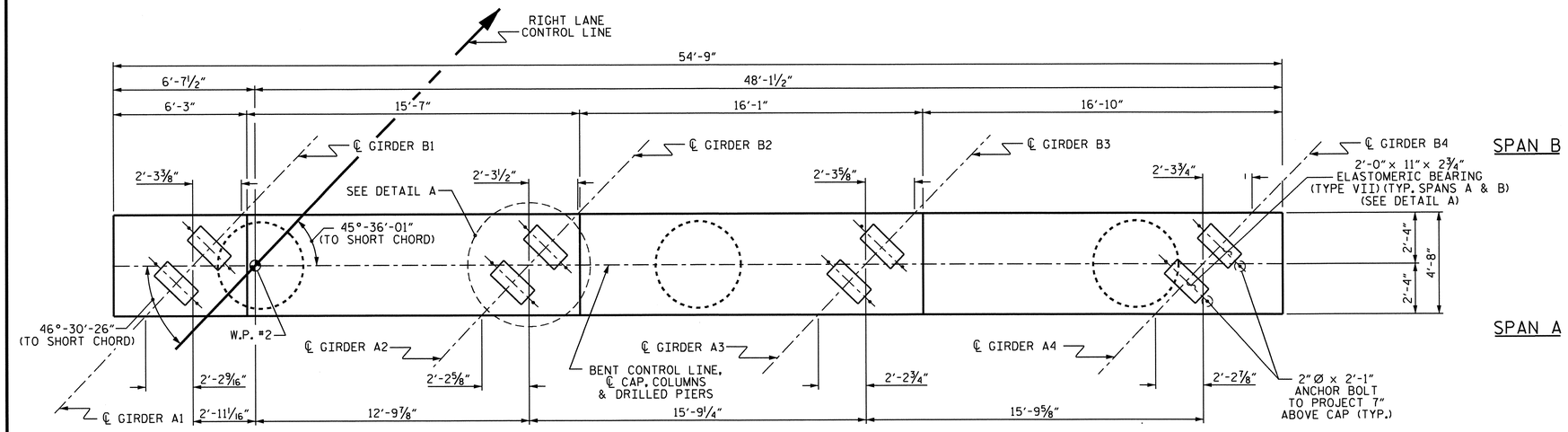

PLAN

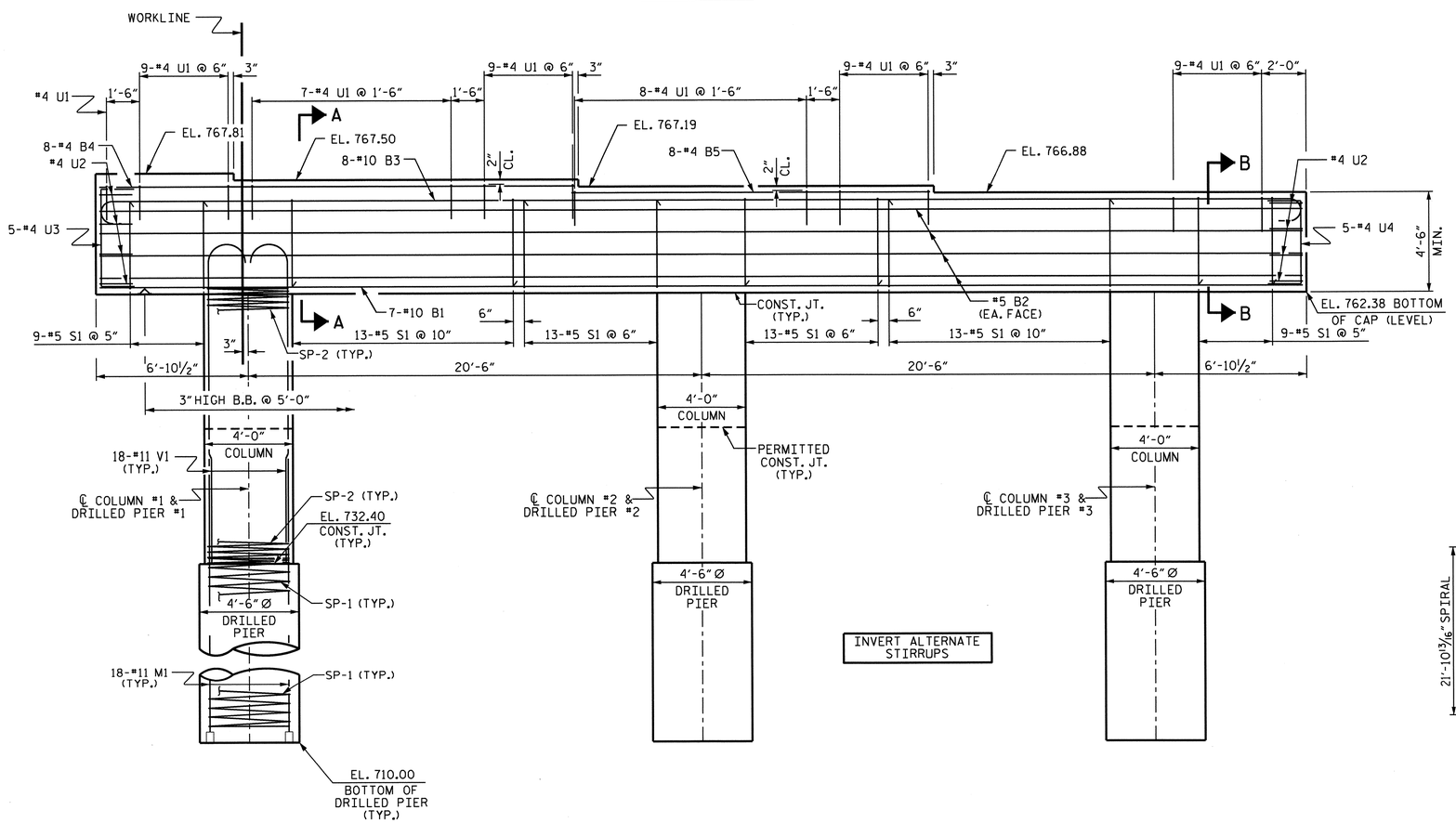

ELEVATION

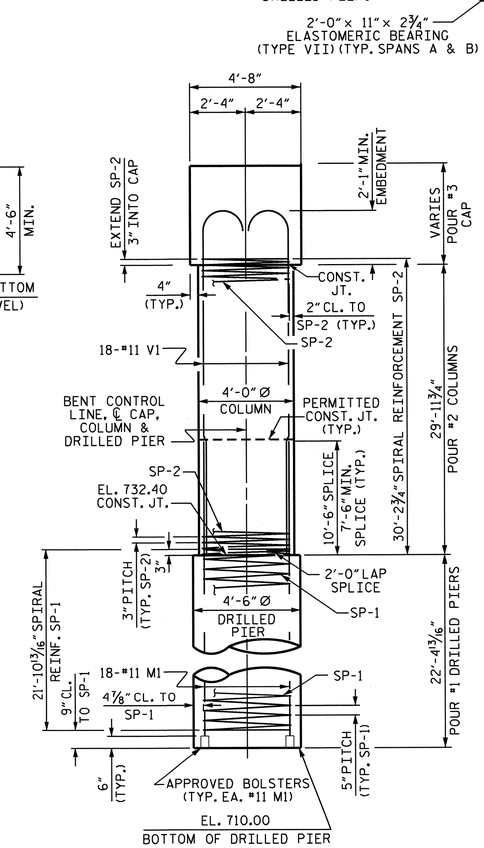

END ELEVATION

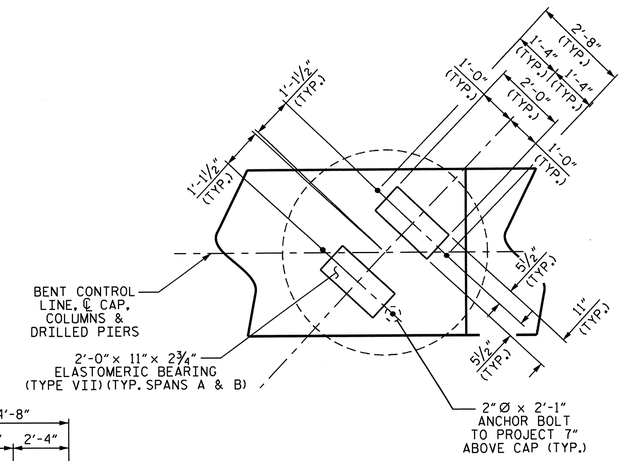

DETAIL A

(TYP. ALL BEARINGS)

NORTH CAROLINA PROFESSIONAL SEAL 15825 ENGINEER BRUCE D. KLAPPENBACH
6-27-2013

PROJECT NO. R-2707B

CLEVELAND COUNTY

STATION: 340+70.00-L-

SHEET 1 OF 2

STATE OF NORTH CAROLINA
DEPARTMENT OF TRANSPORTATION
RALEIGH

SUBSTRUCTURE BENT #1 (RIGHT LANE)

REVISIONS						SHEET NO.
NO.	BY:	DATE:	NO.	BY:	DATE:	S-214
1			3			TOTAL SHEETS
2			4			266

DESIGN ENGINEER OF RECORD: S. T. CHAMPION DATE: 5-13

DRAWN BY: H. T. BARBOUR DATE: 3-07-12

CHECKED BY: D. A. GLADDEN DATE: 8-12

25-JUN-2013 09:48
K:\Structures\Plans\Bailey\STR5and6\TBARBOUR\Microstation\RIGHT LANE\substructure\R-2707B_SD_B*.dgn
tbarbour

STR. #6

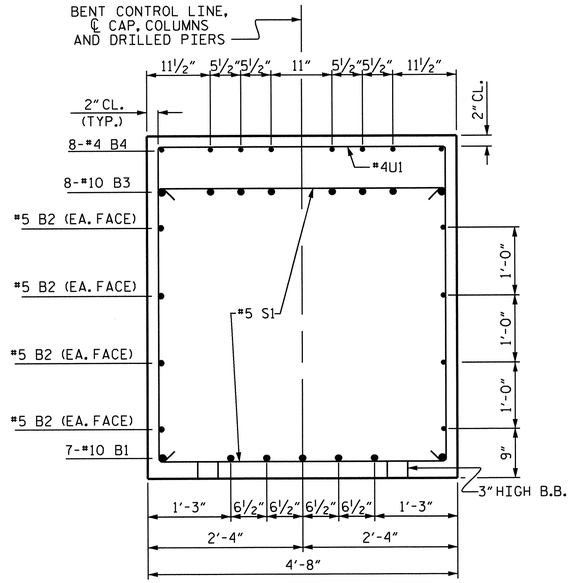

SECTION A-A

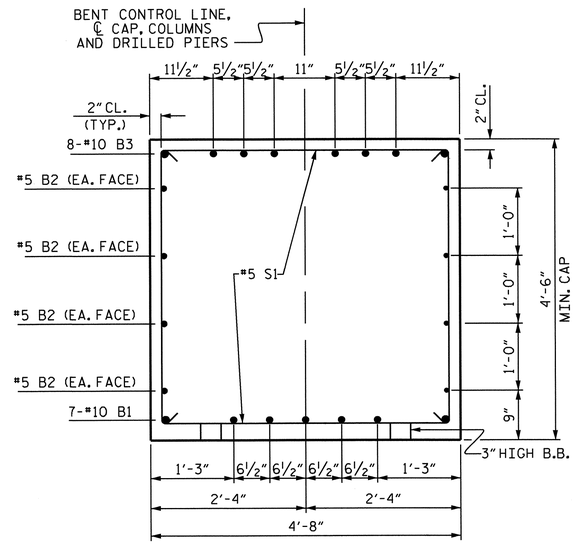

SECTION B-B

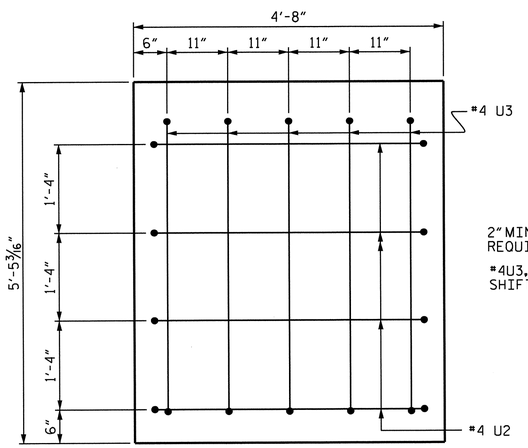

LEFT END VIEW

2" MIN. CONCRETE COVER FROM END OF CAP REQUIRED FOR ALL #4U3, #4U2 AND #4U4 BARS.

#4U3, #4U2 AND #4U4 BARS MAY BE SHIFTED UP TO 2" TO CLEAR "B" BARS.

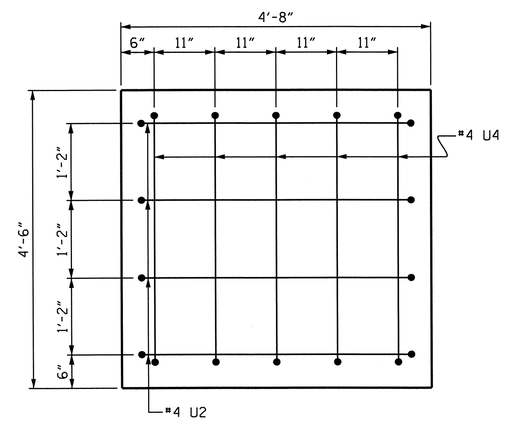

RIGHT END VIEW

BAR TYPES

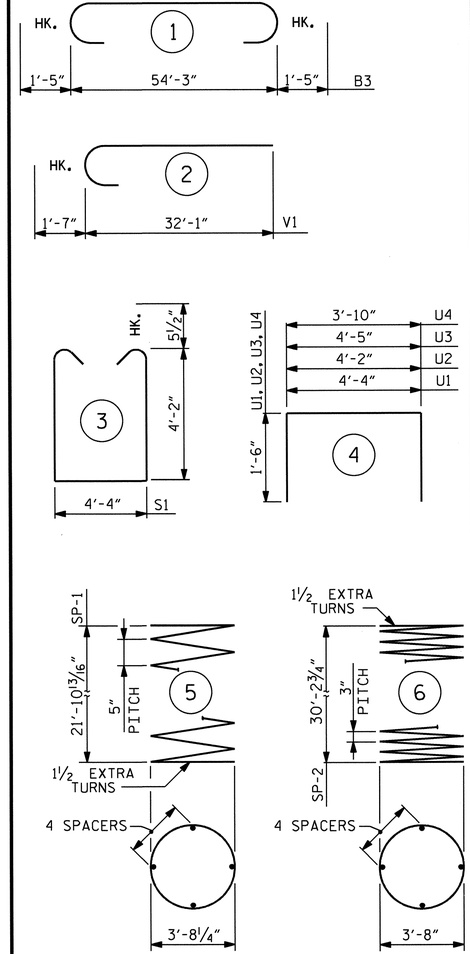

ALL BAR DIMENSIONS ARE OUT TO OUT.

BILL OF MATERIAL

BENT #1

BAR	NO.	SIZE	TYPE	LENGTH	WEIGHT
B1	7	#10	STR.	54'-5"	1639
B2	8	#5	STR.	54'-5"	454
B3	8	#10	1	57'-1"	1965
B4	8	#4	STR.	21'-6"	115
B5	8	#4	STR.	16'-2"	86
M1	54	#11	STR.	32'-5"	9300
S1	70	#5	3	13'-7"	992
U1	51	#4	4	7'-4"	250
U2	8	#4	4	7'-2"	38
U3	5	#4	4	7'-5"	25
U4	5	#4	4	6'-10"	23
V1	54	#11	2	33'-8"	9659
REINFORCING STEEL (LBS.)					24546
SP-1	3	*	5	619'-2"	1937
SP-2	3	**	6	1393'-5"	2792
SPIRAL REINFORCING STEEL (LBS.)					4729

CLASS A CONCRETE
POUR #2 (COLUMNS) 41.9 C.Y.
POUR #3 (CAP) 46.1 C.Y.
TOTAL 88.0 C.Y.

DRILLED PIERS

DRILLED PIER CONCRETE
POUR #1 (DRILLED PIERS) 39.6 C.Y.

4'-6"Ø DRILLED PIERS IN SOIL 32.70 LIN. FT.

4'-6"Ø DRILLED PIERS NOT IN SOIL 34.50 LIN. FT.

4'-6"Ø PERMANENT STEEL CASING 22.20 LIN. FT.

CSL TUBES 358.5 LIN. FT.

* THE SP-1 REINFORCING STEEL SHALL BE W31 OR D-31 COLD DRAWN WIRE OR #5 PLAIN OR DEFORMED BAR.

** THE SP-2 SPIRAL REINFORCING STEEL SHALL BE W20 OR D-20 COLD DRAWN WIRE OR #4 PLAIN OR DEFORMED BAR.

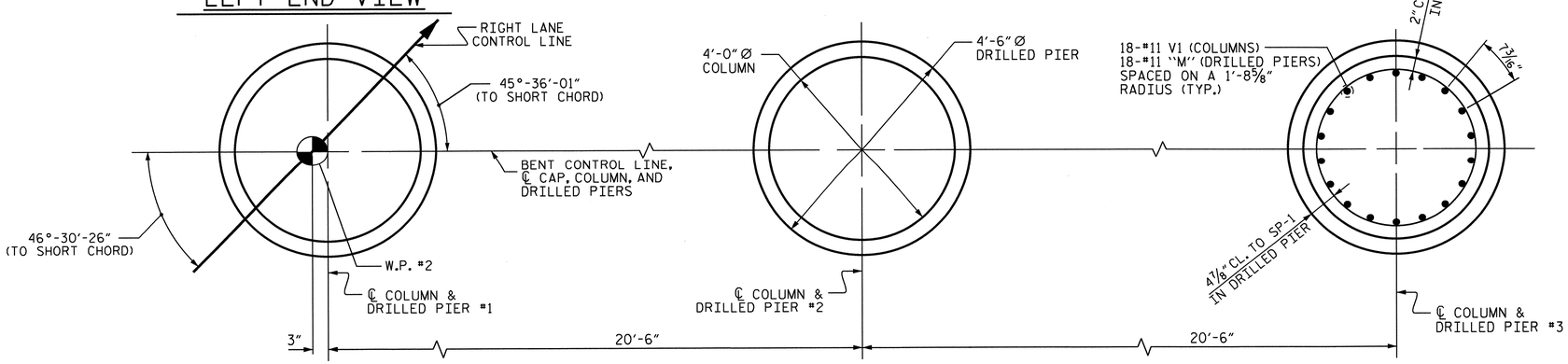

PLAN OF COLUMNS AND DRILLED PIERS

ALL COLUMNS AND DRILLED PIERS ARE SIMILAR

PROJECT NO. R-2707B
CLEVELAND COUNTY
STATION: 340+70.00-L-

SHEET 2 OF 2

STATE OF NORTH CAROLINA
DEPARTMENT OF TRANSPORTATION
RALEIGH

SUBSTRUCTURE
BENT #1
(RIGHT LANE)

NORTH CAROLINA PROFESSIONAL SEAL 15825 ENGINEER BRUCE D. KLAPPENBACH
6-27-2013

REVISIONS						SHEET NO.
NO.	BY:	DATE:	NO.	BY:	DATE:	S-215
1			3			TOTAL SHEETS
2			4			266

DRAWN BY : H. T. BARBOUR DATE : 3-09-12
CHECKED BY : D. A. GLADDEN DATE : 8-12
DESIGN ENGINEER OF RECORD: S. T. CHAMPION DATE : 5-13

14-MAY-2013 09:04
K:\Structures\Plans\Bailey\STR5and6\TBARBOUR\Microstation\RIGHT LANE\substructure\R-2707B_SD_B*.dgn
tbarbour

STR. #6

NOTES

STIRRUPS IN CAP MAY BE SHIFTED AS NECESSARY TO CLEAR ANCHOR BOLTS.

THE CONTRACTOR'S ATTENTION IS CALLED TO THE FACT THAT THE LONGITUDINAL REINFORCEMENT FOR THE DRILLED PIERS IS DETAILED WITH 3 FEET OF EXTRA LENGTH.

ALL STEEL IN THE DRILLED PIERS IS INCLUDED IN THE PAY ITEMS FOR "REINFORCING STEEL" AND "SPIRAL COLUMN REINFORCING STEEL."

HOOKS ON V1 BARS MAY BE TURNED AS NECESSARY FOR PLACING REINFORCING STEEL.

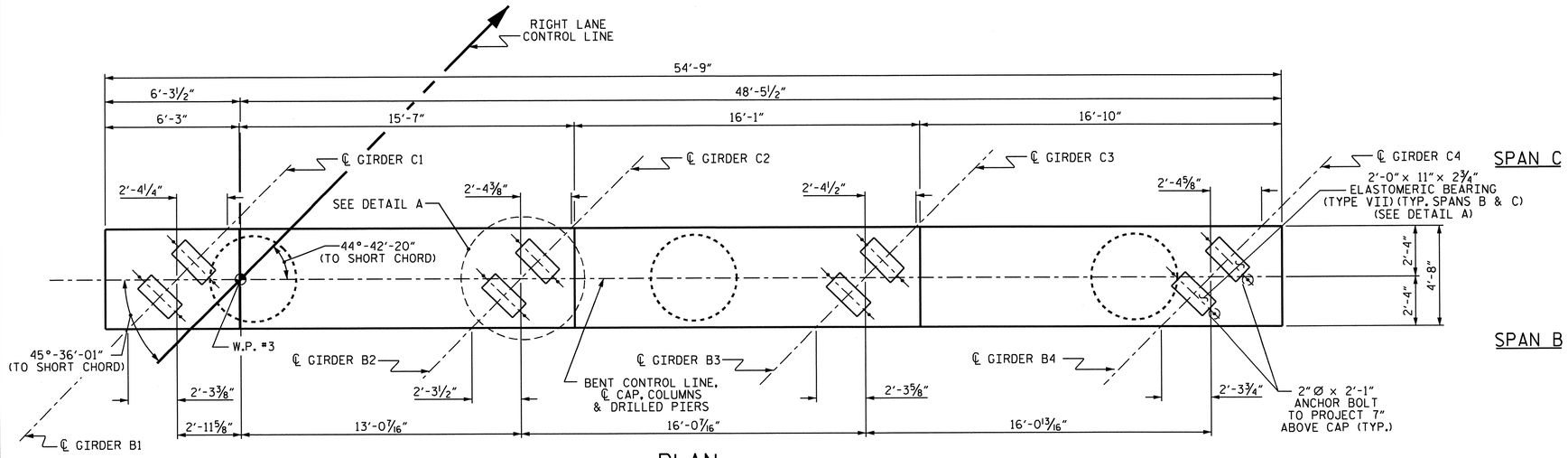

PLAN

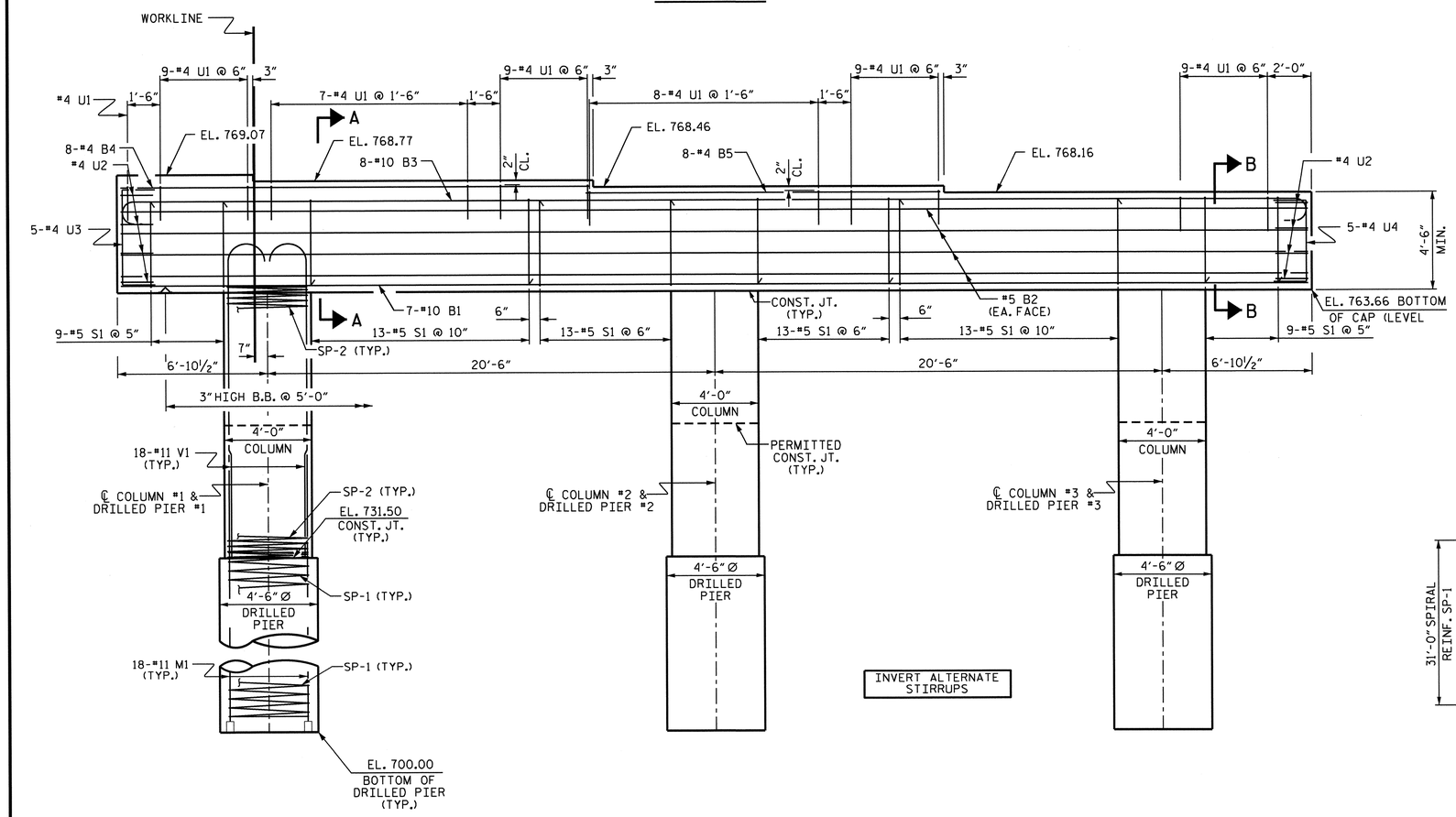

ELEVATION

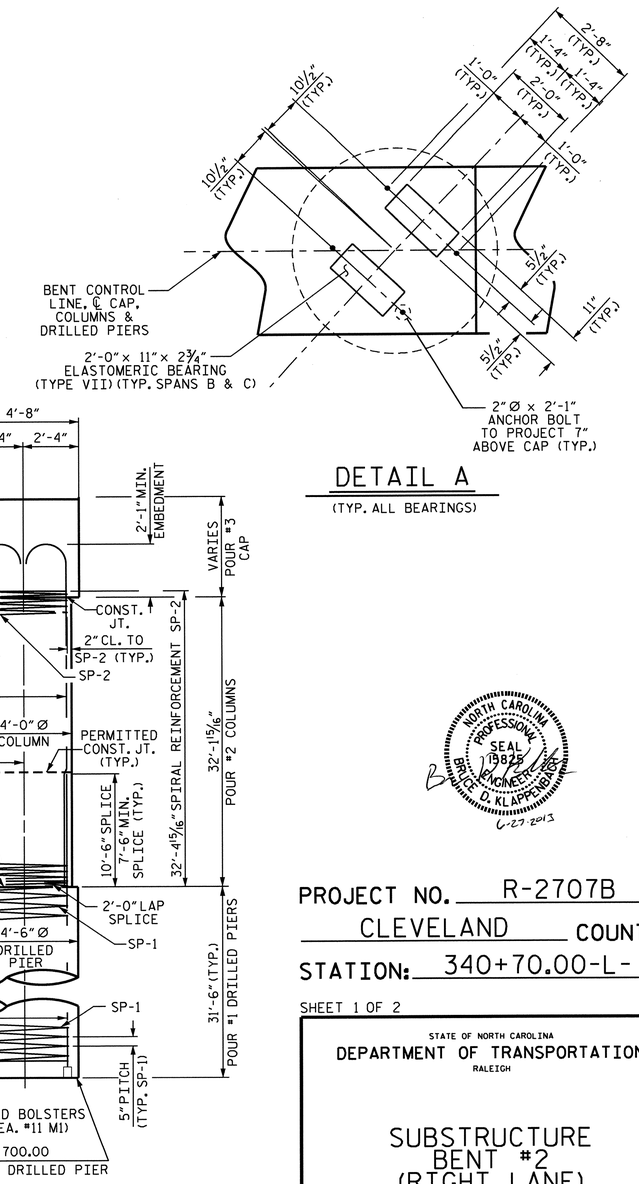

END ELEVATION

DETAIL A

(TYP. ALL BEARINGS)

NORTH CAROLINA PROFESSIONAL SEAL 19825 ENGINEER BRUCE D. KLAPPENBACH 6-25-2013

PROJECT NO. R-2707B

CLEVELAND COUNTY

STATION: 340+70.00-L-

SHEET 1 OF 2

STATE OF NORTH CAROLINA
DEPARTMENT OF TRANSPORTATION
RALEIGH

SUBSTRUCTURE BENT #2 (RIGHT LANE)

REVISIONS						SHEET NO.
NO.	BY:	DATE:	NO.	BY:	DATE:	S-216
1			3			TOTAL SHEETS
2			4			266

DESIGN ENGINEER OF RECORD: S. T. CHAMPION DATE: 5-13

DRAWN BY: H. T. BARBOUR DATE: 3-07-12

CHECKED BY: D. A. GLADDEN DATE: 8-12

25-JUN-2013 09:48
K:\Structures\Plans\Bailey\STR5and6\TBARBOUR\Microstation\RIGHT LANE\substructure\R-2707B_SD_B*.dgn
tbarbour

STR. #6

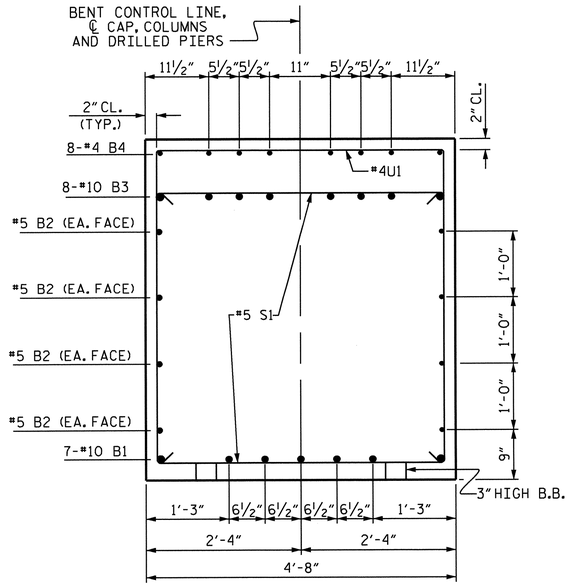

SECTION A-A

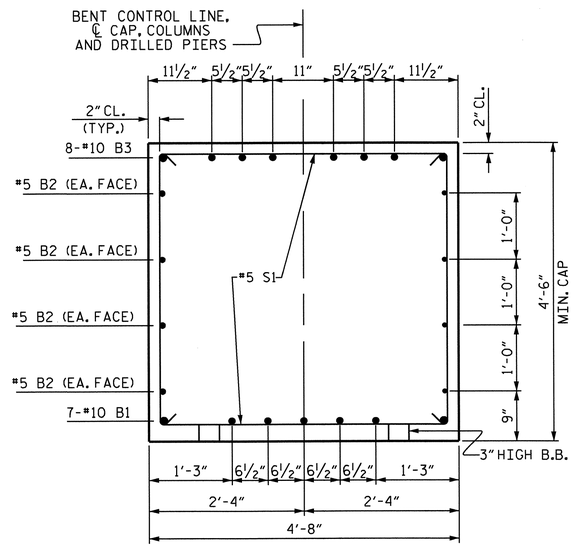

SECTION B-B

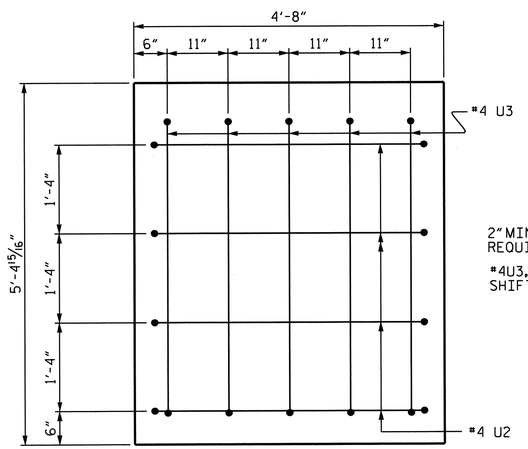

2" MIN. CONCRETE COVER FROM END OF CAP REQUIRED FOR ALL #4U3, #4U2 AND #4U4 BARS.

#4U3, #4U2 AND #4U4 BARS MAY BE SHIFTED UP TO 2" TO CLEAR "B" BARS.

LEFT END VIEW

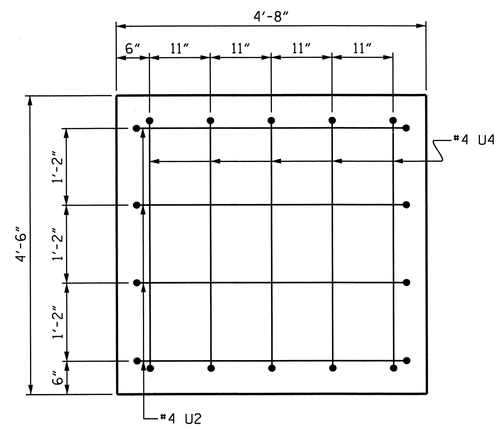

RIGHT END VIEW

BAR TYPES

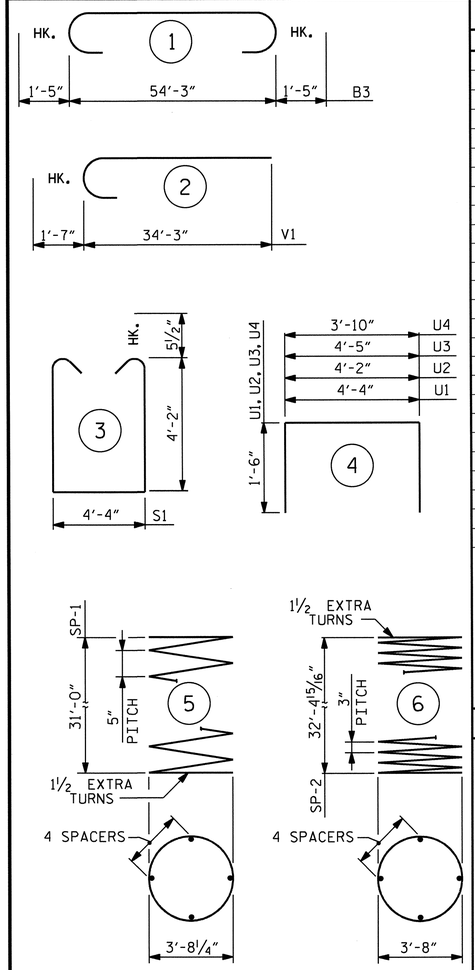

ALL BAR DIMENSIONS ARE OUT TO OUT.

BILL OF MATERIAL

BENT #2

BAR	NO.	SIZE	TYPE	LENGTH	WEIGHT
B1	7	#10	STR.	54'-5"	1639
B2	8	#5	STR.	54'-5"	454
B3	8	#10	1	57'-1"	1965
B4	8	#4	STR.	21'-6"	115
B5	8	#4	STR.	16'-2"	86
M1	54	#11	STR.	41'-6"	11906
S1	70	#5	3	13'-7"	992
U1	51	#4	4	7'-4"	250
U2	8	#4	4	7'-2"	38
U3	5	#4	4	7'-5"	25
U4	5	#4	4	6'-10"	23
V1	54	#11	2	35'-10"	10281
REINFORCING STEEL (LBS.)					27774
SP-1	3	*	5	867'-4"	2714
SP-2	3	**	6	1493'-0"	2992
SPIRAL REINFORCING STEEL (LBS.)					5706

CLASS A CONCRETE

POUR #2 (COLUMNS)	44.9 C.Y.
POUR #3 (CAP)	46.0 C.Y.
TOTAL	90.9 C.Y.

DRILLED PIERS

DRILLED PIER CONCRETE

POUR #1 (DRILLED PIERS)	55.7 C.Y.
4'-6" Ø DRILLED PIERS IN SOIL	60.00 LIN. FT.
4'-6" Ø DRILLED PIERS NOT IN SOIL	34.50 LIN. FT.
4'-6" Ø PERMANENT STEEL CASING	40.50 LIN. FT.
CSL TUBES	495.0 LIN. FT.

* THE SP-1 REINFORCING STEEL SHALL BE W31 OR D-31 COLD DRAWN WIRE OR #5 PLAIN OR DEFORMED BAR.

** THE SP-2 SPIRAL REINFORCING STEEL SHALL BE W20 OR D-20 COLD DRAWN WIRE OR #4 PLAIN OR DEFORMED BAR.

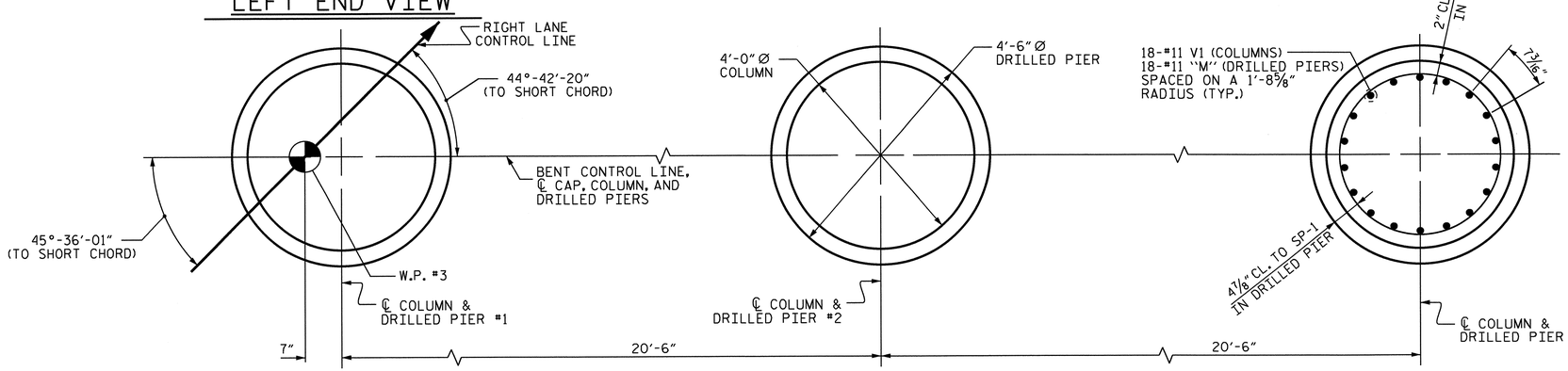

PLAN OF COLUMNS AND DRILLED PIERS

ALL COLUMNS AND DRILLED PIERS ARE SIMILAR

PROJECT NO. R-2707B

CLEVELAND COUNTY

STATION: 340+70.00-L-

SHEET 2 OF 2

STATE OF NORTH CAROLINA
DEPARTMENT OF TRANSPORTATION
RALEIGH

SUBSTRUCTURE
BENT #2
(RIGHT LANE)

NORTH CAROLINA PROFESSIONAL SEAL 15825 ENGINEER BRUCE D. KLAPPENBACH 6-27-2013

REVISIONS							SHEET NO.
NO.	BY:	DATE:	NO.	BY:	DATE:		S-217
1			3				TOTAL SHEETS
2			4				266

STR. #6

DRAWN BY : H. T. BARBOUR DATE : 3-10-12
CHECKED BY : D. A. GLADDEN DATE : 8-12

DESIGN ENGINEER OF RECORD: S. T. CHAMPION DATE : 5-13

14-MAY-2013 09:04
K:\Structures\Plans\Bailey\STR5and6\TBARBOUR\Microstation\RIGHT LANE\substructure\R-2707B_SD_B*.dgn
tbarbour

NOTES

STIRRUPS IN CAP MAY BE SHIFTED AS NECESSARY TO CLEAR ANCHOR BOLTS.

THE CONTRACTOR'S ATTENTION IS CALLED TO THE FACT THAT THE LONGITUDINAL REINFORCEMENT FOR THE DRILLED PIERS IS DETAILED WITH 3 FEET OF EXTRA LENGTH.

ALL STEEL IN THE DRILLED PIERS IS INCLUDED IN THE PAY ITEMS FOR "REINFORCING STEEL" AND "SPIRAL COLUMN REINFORCING STEEL."

HOOKS ON V1 BARS MAY BE TURNED AS NECESSARY FOR PLACING REINFORCING STEEL.

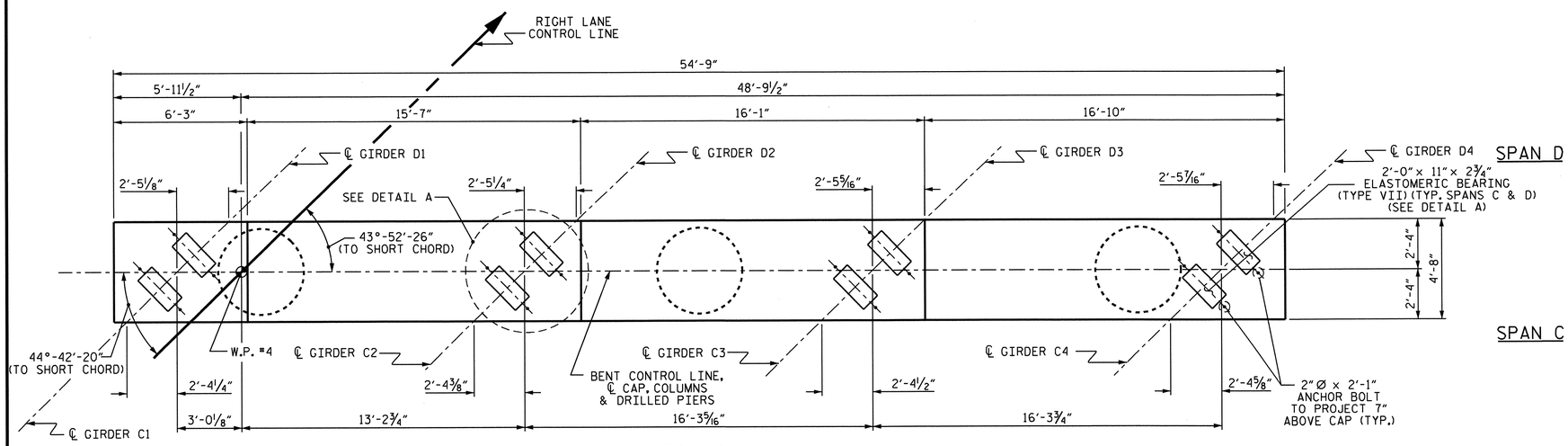

PLAN

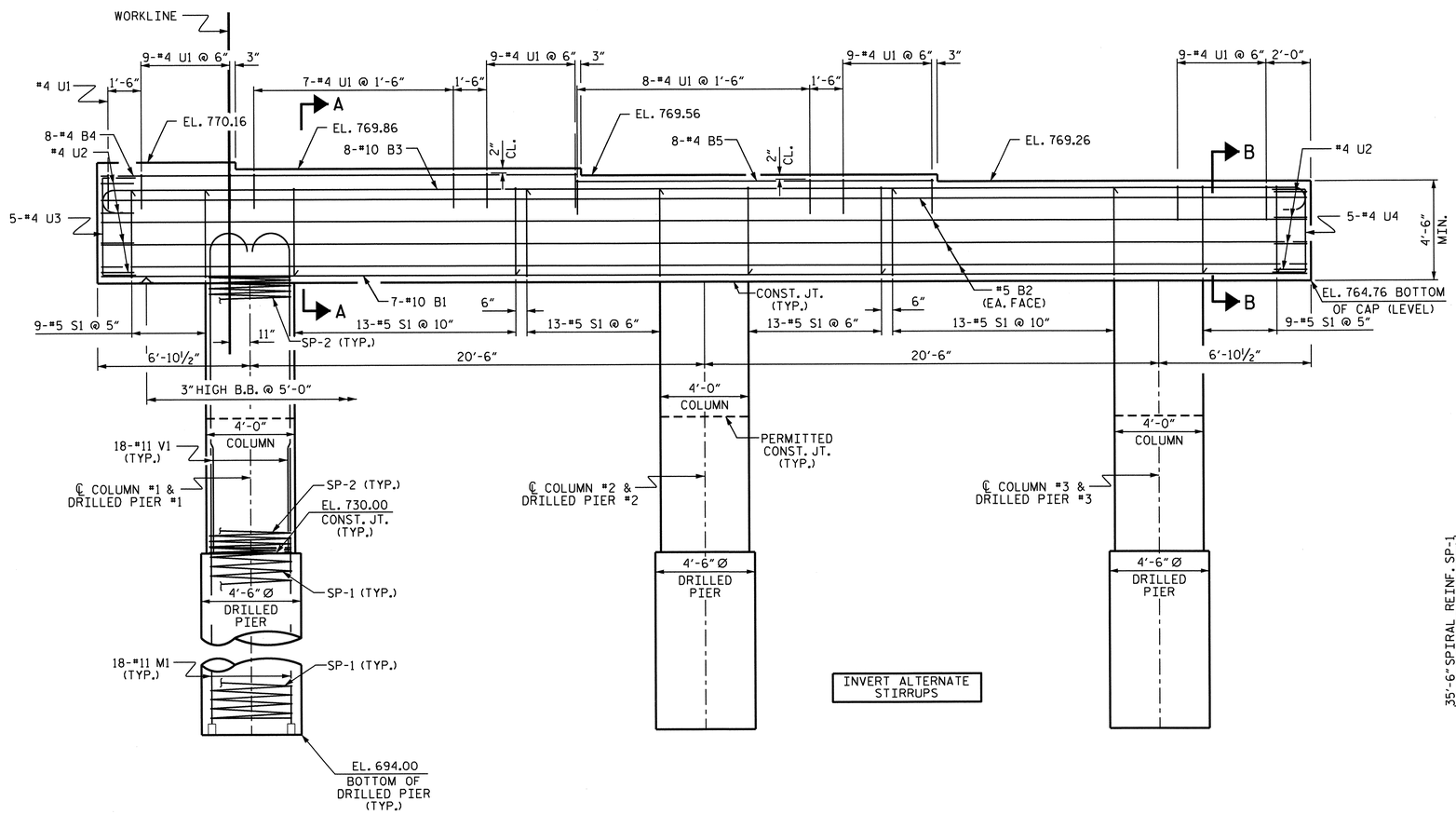

ELEVATION

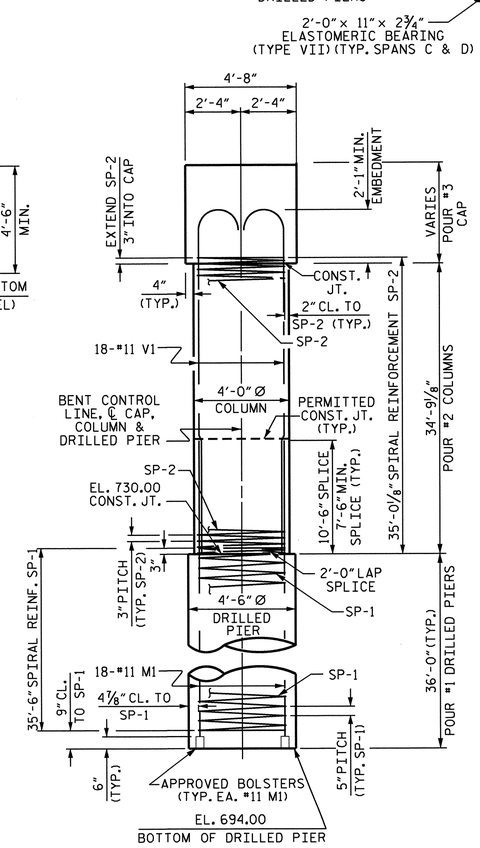

END ELEVATION

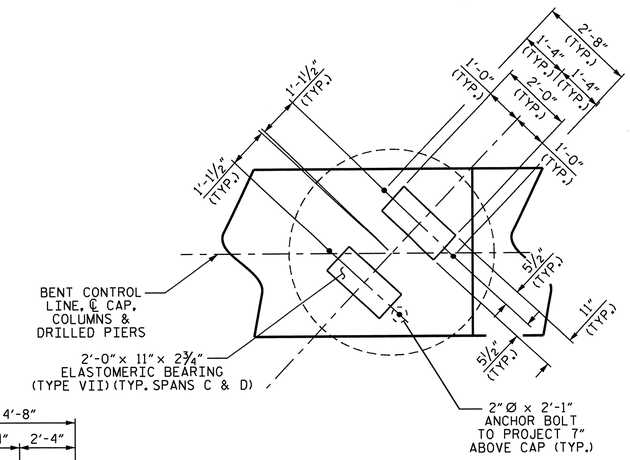

DETAIL A

(TYP. ALL BEARINGS)

NORTH CAROLINA PROFESSIONAL SEAL 15825 ENGINEER S. T. CHAMPION D. KL APPLEGATE 6-7-2013

PROJECT NO. R-2707B

CLEVELAND COUNTY

STATION: 340+70.00-L-

SHEET 1 OF 2

STATE OF NORTH CAROLINA
DEPARTMENT OF TRANSPORTATION
RALEIGH

SUBSTRUCTURE
BENT #3
(RIGHT LANE)

REVISIONS						SHEET NO.
NO.	BY:	DATE:	NO.	BY:	DATE:	S-218
1			3			TOTAL SHEETS
2			4			266

STR. #6

DESIGN ENGINEER OF RECORD: S. T. CHAMPION DATE: 5-13
DRAWN BY: H. T. BARBOUR DATE: 3-07-12
CHECKED BY: D. A. GLADDEN DATE: 8-12

25-JUN-2013 09:48
K:\Structures\Plans\Bailey\STR5and6\TBARBOUR\Microstation\RIGHT LANE\substructure\R-2707B_SD_B*.dgn
tbarbour

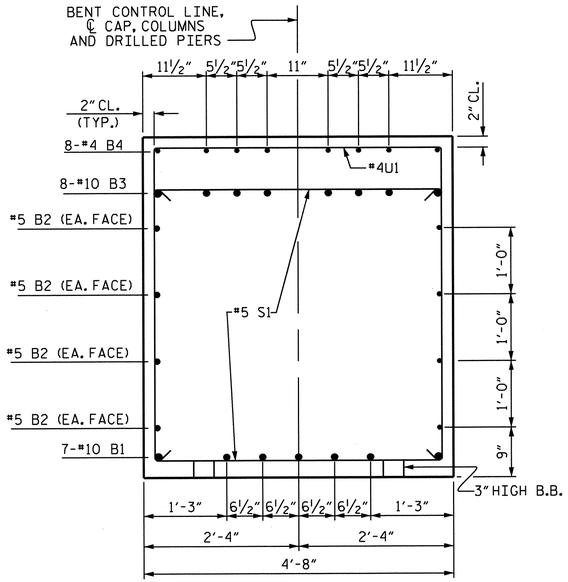

SECTION A-A

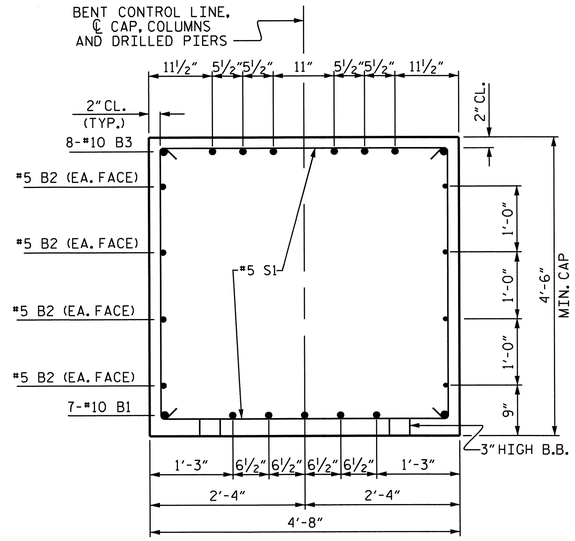

SECTION B-B

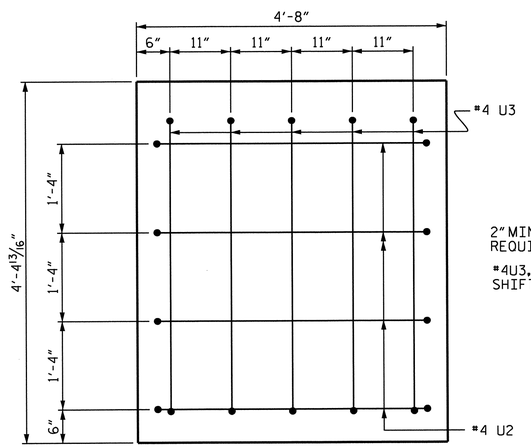

2" MIN. CONCRETE COVER FROM END OF CAP REQUIRED FOR ALL #4U3, #4U2 AND #4U4 BARS.

#4U3, #4U2 AND #4U4 BARS MAY BE SHIFTED UP TO 2" TO CLEAR "B" BARS.

LEFT END VIEW

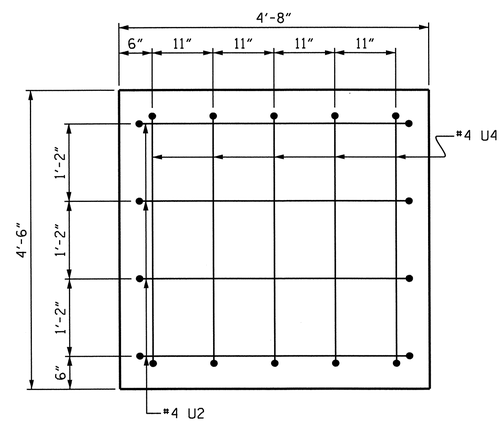

RIGHT END VIEW

BAR TYPES

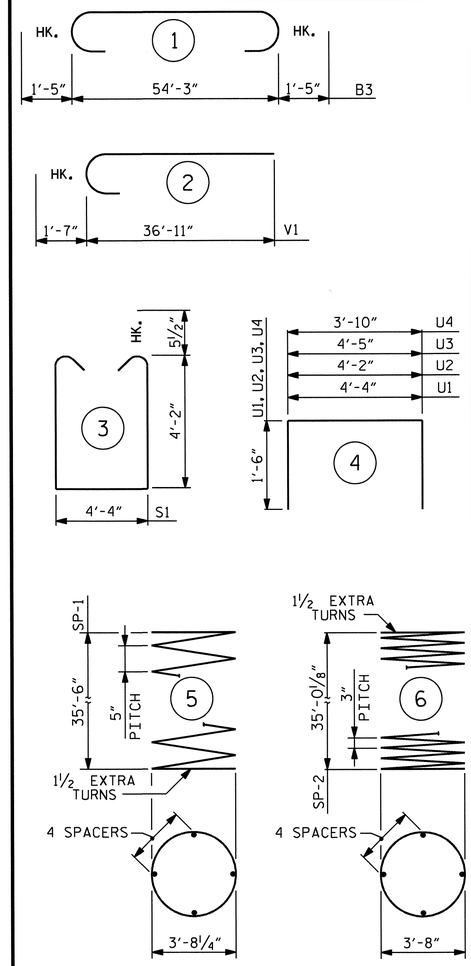

ALL BAR DIMENSIONS ARE OUT TO OUT.

BILL OF MATERIAL

BENT #3

BAR	NO.	SIZE	TYPE	LENGTH	WEIGHT
B1	7	#10	STR.	54'-5"	1639
B2	8	#5	STR.	54'-5"	454
B3	8	#10	1	57'-1"	1965
B4	8	#4	STR.	21'-6"	115
B5	8	#4	STR.	16'-2"	86
M1	54	#11	STR.	46'-0"	13197
S1	70	#5	3	13'-7"	992
U1	51	#4	4	7'-4"	250
U2	8	#4	4	7'-2"	38
U3	5	#4	4	7'-5"	25
U4	5	#4	4	6'-10"	23
V1	54	#11	2	38'-6"	11046
REINFORCING STEEL (LBS.)					29830
SP-1	3	*	5	990'-1"	3098
SP-2	3	**	6	1612'-5"	3231
SPIRAL REINFORCING STEEL (LBS.)					6329

CLASS A CONCRETE
POUR #2 (COLUMNS) 48.5 C.Y.
POUR #3 (CAP) 46.0 C.Y.
TOTAL 94.5 C.Y.

DRILLED PIERS

DRILLED PIER CONCRETE
POUR #1 (DRILLED PIERS) 63.6 C.Y.
4'-6" Ø DRILLED PIERS IN SOIL 64.50 LIN. FT.
4'-6" Ø DRILLED PIERS NOT IN SOIL 43.50 LIN. FT.
CSL TUBES 562.5 LIN. FT.

* THE SP-1 REINFORCING STEEL SHALL BE W31 OR D-31 COLD DRAWN WIRE OR #5 PLAIN OR DEFORMED BAR.

** THE SP-2 SPIRAL REINFORCING STEEL SHALL BE W20 OR D-20 COLD DRAWN WIRE OR #4 PLAIN OR DEFORMED BAR.

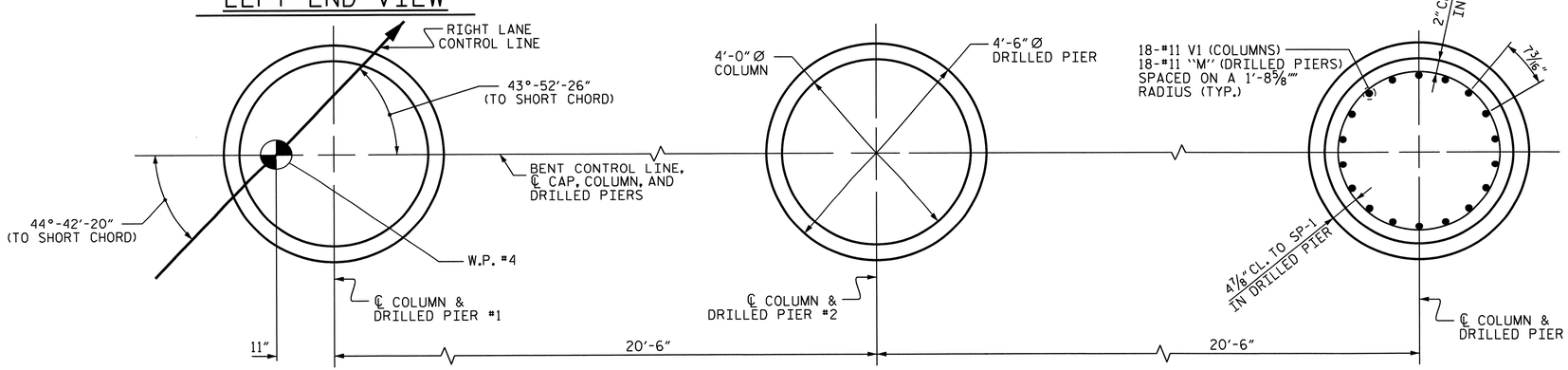

PLAN OF COLUMNS AND DRILLED PIERS

ALL COLUMNS AND DRILLED PIERS ARE SIMILAR

PROJECT NO. R-2707B
CLEVELAND COUNTY
STATION: 340+70.00-L-

SHEET 2 OF 2

STATE OF NORTH CAROLINA
DEPARTMENT OF TRANSPORTATION
RALEIGH

SUBSTRUCTURE
BENT #3
(RIGHT LANE)

NORTH CAROLINA PROFESSIONAL SEAL 15825 ENGINEER BRUCE D. KLAPPENBACH
6-27-2013

REVISIONS						SHEET NO.
NO.	BY:	DATE:	NO.	BY:	DATE:	S-219
1			3			TOTAL SHEETS
2			4			266

DRAWN BY : H. T. BARBOUR DATE : 3-07-12
CHECKED BY : D. A. GLADDEN DATE : 8-12

DESIGN ENGINEER OF RECORD: S. T. CHAMPION DATE : 5-13

14-MAY-2013 09:04
K:\Structures\Plans\Bailey\STR5and6\TBARBOUR\Microstation\RIGHT LANE\substructure\R-2707B_SD_B*.dgn
tbarbour

STR. #6

NOTES

STIRRUPS IN CAP MAY BE SHIFTED AS NECESSARY TO CLEAR ANCHOR BOLTS.

THE CONTRACTOR'S ATTENTION IS CALLED TO THE FACT THAT THE LONGITUDINAL REINFORCEMENT FOR THE DRILLED PIERS IS DETAILED WITH 3 FEET OF EXTRA LENGTH.

ALL STEEL IN THE DRILLED PIERS IS INCLUDED IN THE PAY ITEMS FOR "REINFORCING STEEL" AND "SPIRAL COLUMN REINFORCING STEEL."

HOOKS ON V1 BARS MAY BE TURNED AS NECESSARY FOR PLACING REINFORCING STEEL.

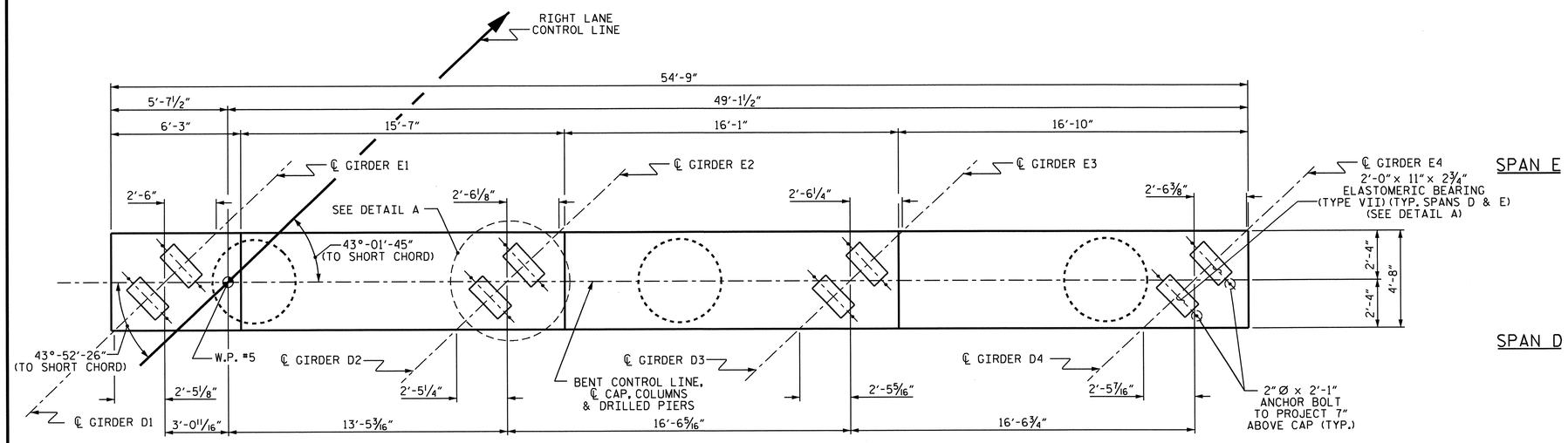

PLAN

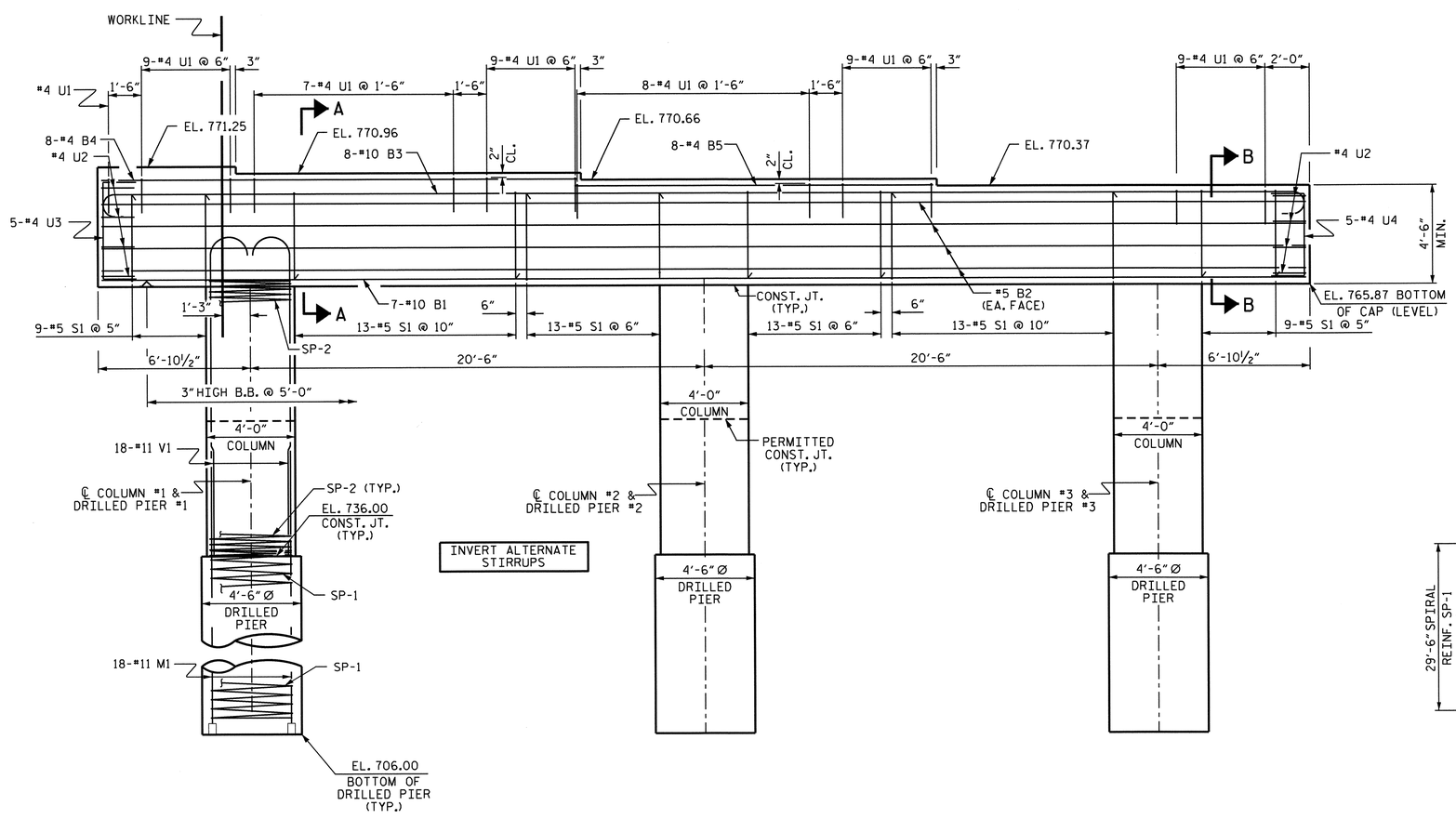

ELEVATION

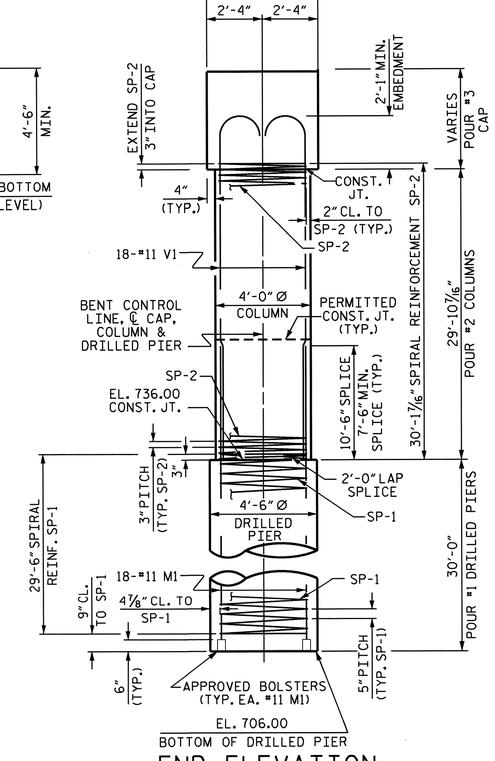

END ELEVATION

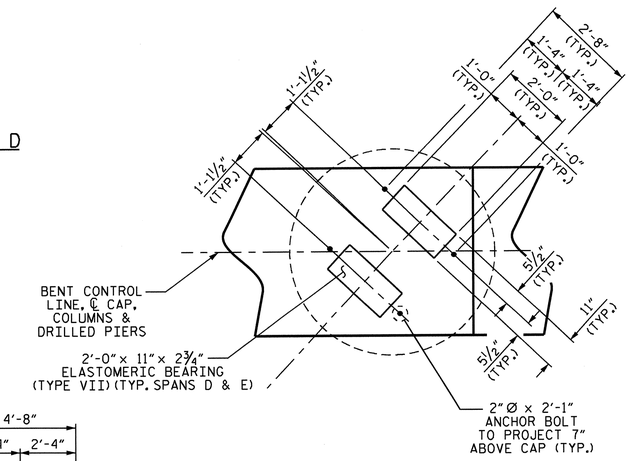

DETAIL A

(TYP. ALL BEARINGS)

NORTH CAROLINA PROFESSIONAL SEAL 15825 ENGINEER BRUCE D. KLAPPENBACH
6-27-2013

PROJECT NO. R-2707B

CLEVELAND COUNTY

STATION: 340+70.00-L-

SHEET 1 OF 2

STATE OF NORTH CAROLINA
DEPARTMENT OF TRANSPORTATION
RALEIGH

SUBSTRUCTURE
BENT #4
(RIGHT LANE)

REVISIONS								SHEET NO.
NO.	BY:	DATE:	NO.	BY:	DATE:			S-220
1			3					TOTAL SHEETS
2			4					266

STR. #6

DESIGN ENGINEER OF RECORD: S. T. CHAMPION		DATE :	5-13
DRAWN BY : H. T. BARBOUR		DATE :	3-07-12
CHECKED BY : D. A. GLADDEN		DATE :	8-12

25-JUN-2013 09:48
K:\Structures\Plans\Bolley\STR5and6\TBARBOUR\Microstation\RIGHT LANE\substructure\R-2707B_SD_B*.dgn
tbarbour

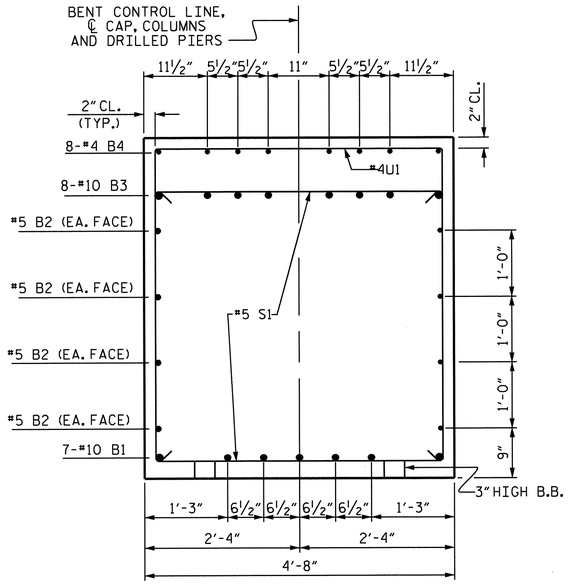

SECTION A-A

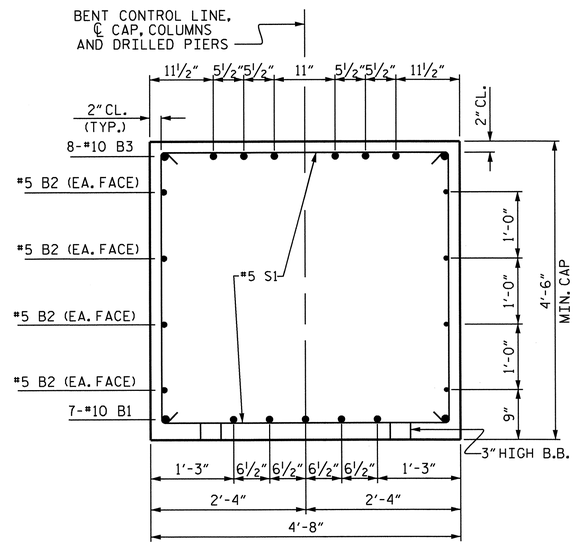

SECTION B-B

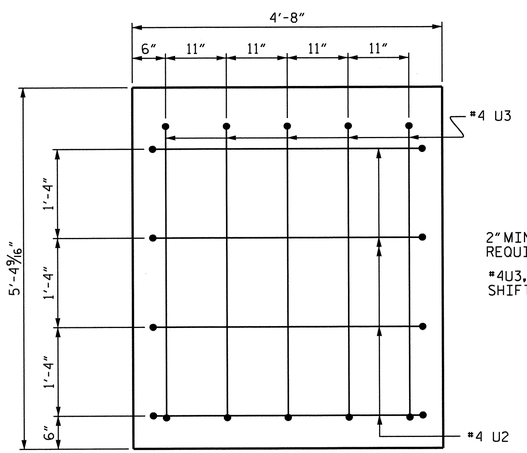

2" MIN. CONCRETE COVER FROM END OF CAP REQUIRED FOR ALL #4U3, #4U2 AND #4U4 BARS.

#4U3, #4U2 AND #4U4 BARS MAY BE SHIFTED UP TO 2" TO CLEAR "B" BARS.

LEFT END VIEW

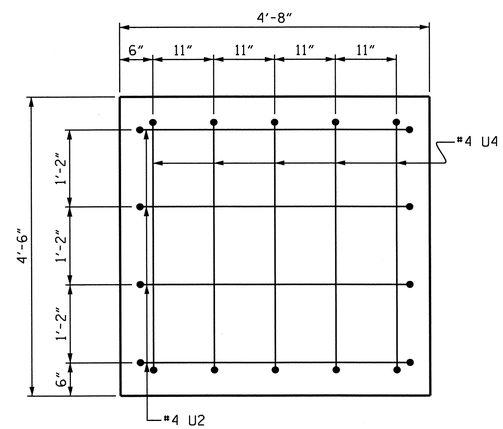

RIGHT END VIEW

BAR TYPES

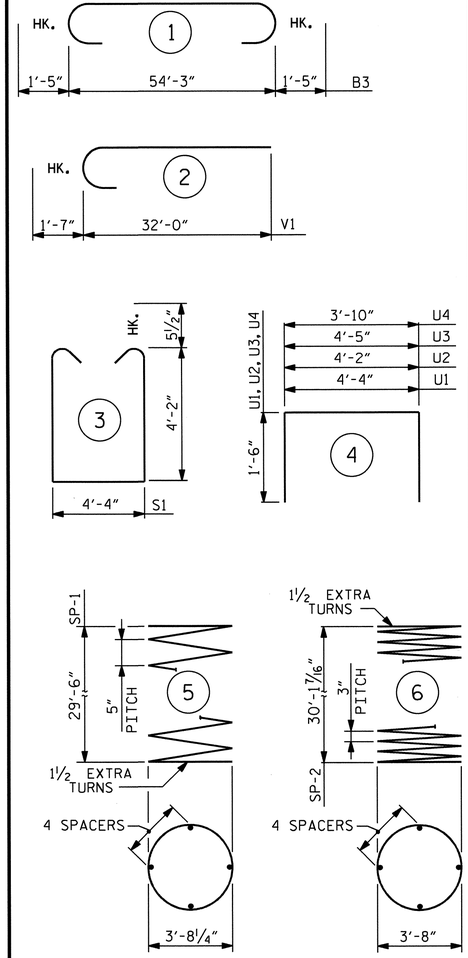

ALL BAR DIMENSIONS ARE OUT TO OUT.

BILL OF MATERIAL

BENT #4

BAR	NO.	SIZE	TYPE	LENGTH	WEIGHT
B1	7	#10	STR.	54'-5"	1639
B2	8	#5	STR.	54'-5"	454
B3	8	#10	1	57'-1"	1965
B4	8	#4	STR.	21'-6"	115
B5	8	#4	STR.	16'-2"	86
M1	54	#11	STR.	40'-0"	11476
S1	70	#5	3	13'-7"	992
U1	51	#4	4	7'-4"	250
U2	8	#4	4	7'-2"	38
U3	5	#4	4	7'-5"	25
U4	5	#4	4	6'-10"	23
V1	54	#11	2	33'-7"	9635
REINFORCING STEEL (LBS.)					26698
SP-1	3	*	5	827'-5"	2589
SP-2	3	**	6	1387'-9"	2781
SPIRAL REINFORCING STEEL (LBS.)					5370

CLASS A CONCRETE
POUR #2 (COLUMNS) 41.7 C.Y.
POUR #3 (CAP) 45.9 C.Y.
TOTAL 87.6 C.Y.

DRILLED PIERS

DRILLED PIER CONCRETE
POUR #1 (DRILLED PIERS) 53.0 C.Y.
4'-6" Ø DRILLED PIERS IN SOIL 64.50 LIN. FT.
4'-6" Ø DRILLED PIERS NOT IN SOIL 25.50 LIN. FT.
CSL TUBES 472.5 LIN. FT.

* THE SP-1 REINFORCING STEEL SHALL BE W31 OR D-31 COLD DRAWN WIRE OR #5 PLAIN OR DEFORMED BAR.

** THE SP-2 SPIRAL REINFORCING STEEL SHALL BE W20 OR D-20 COLD DRAWN WIRE OR #4 PLAIN OR DEFORMED BAR.

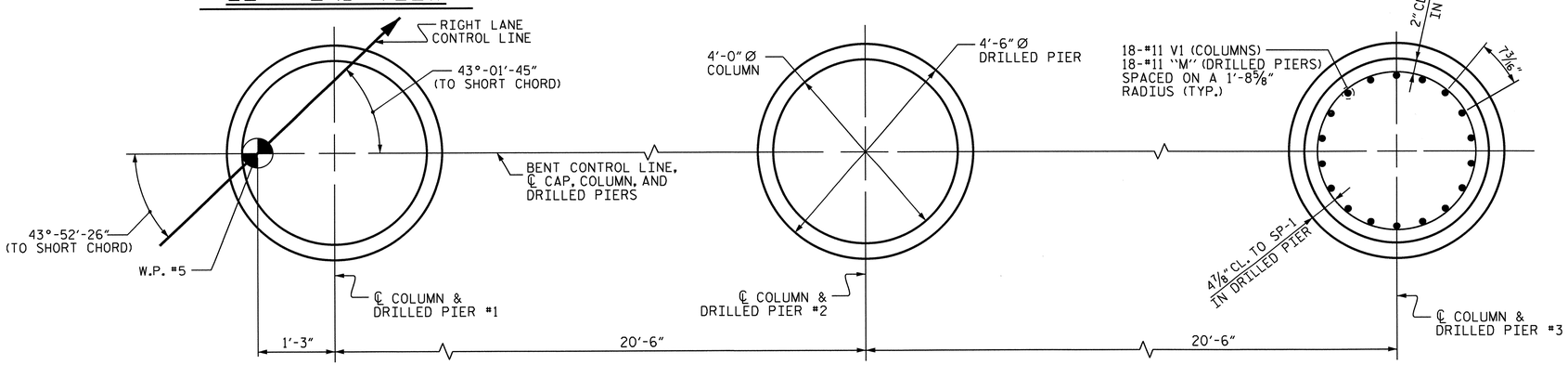

PLAN OF COLUMNS AND DRILLED PIERS

ALL COLUMNS AND DRILLED PIERS ARE SIMILAR

PROJECT NO. R-2707B
CLEVELAND COUNTY
STATION: 340+70.00-L-

SHEET 2 OF 2

STATE OF NORTH CAROLINA
DEPARTMENT OF TRANSPORTATION
RALEIGH

SUBSTRUCTURE
BENT #4
(RIGHT LANE)

NORTH CAROLINA PROFESSIONAL SEAL 15825 ENGINEER BRUCE D. KLAPPENBACH 6-27-2013

DRAWN BY : H. T. BARBOUR	DATE : 3-10-12	DESIGN ENGINEER OF RECORD:
CHECKED BY : D. A. GLADDEN	DATE : 8-12	S. T. CHAMPION DATE : 5-13

REVISIONS						SHEET NO.
NO.	BY:	DATE:	NO.	BY:	DATE:	S-221
1			3			TOTAL SHEETS
2			4			266

STR. #6

14-MAY-2013 09:04
k:\Structures\Plans\Bailey\STR5and6\TBARBOUR\Microstation\RIGHT LANE\substructure\R-2707B_SD_B*.dgn
tbarbour

NOTES

STIRRUPS IN CAP MAY BE SHIFTED AS NECESSARY TO CLEAR ANCHOR BOLTS.

FOR PILE SPLICE DETAILS, SEE END BENT SHEET 3 OF 3.

BACKWALL SHALL BE PLACED BEFORE APPLYING THE EPOXY PROTECTIVE COATING.

THE TOP SURFACE AREAS OF THE END BENT CAPS SHALL BE CURED IN ACCORDANCE WITH THE STANDARD SPECIFICATIONS EXCEPT THE MEMBRANE CURING COMPOUND METHOD SHALL NOT BE USED.

THE TOP SURFACE OF THE CAP EXCEPT THE BRIDGE SEAT BUILDUPS SHALL BE SLOPED TRANSVERSELY FROM THE FILL FACE TO THE BACK FACE AT THE RATE OF 2%.

THE CONCRETE IN THE SHADED AREA OF THE WING SHALL BE POURED AFTER THE BARRIER RAILS ARE CAST IF SLIP FORMING IS USED.

INSTALL THE 4"DIA. DRAIN PIPE THROUGH THE WING WALL AS REQUIRED FOR REINFORCED BRIDGE APPROACH FILLS. SEE THE ROADWAY PLANS. REINFORCING STEEL IN THE WING WALL MAY BE SHIFTED AS NECESSARY TO CLEAR THE DRAIN PIPE.

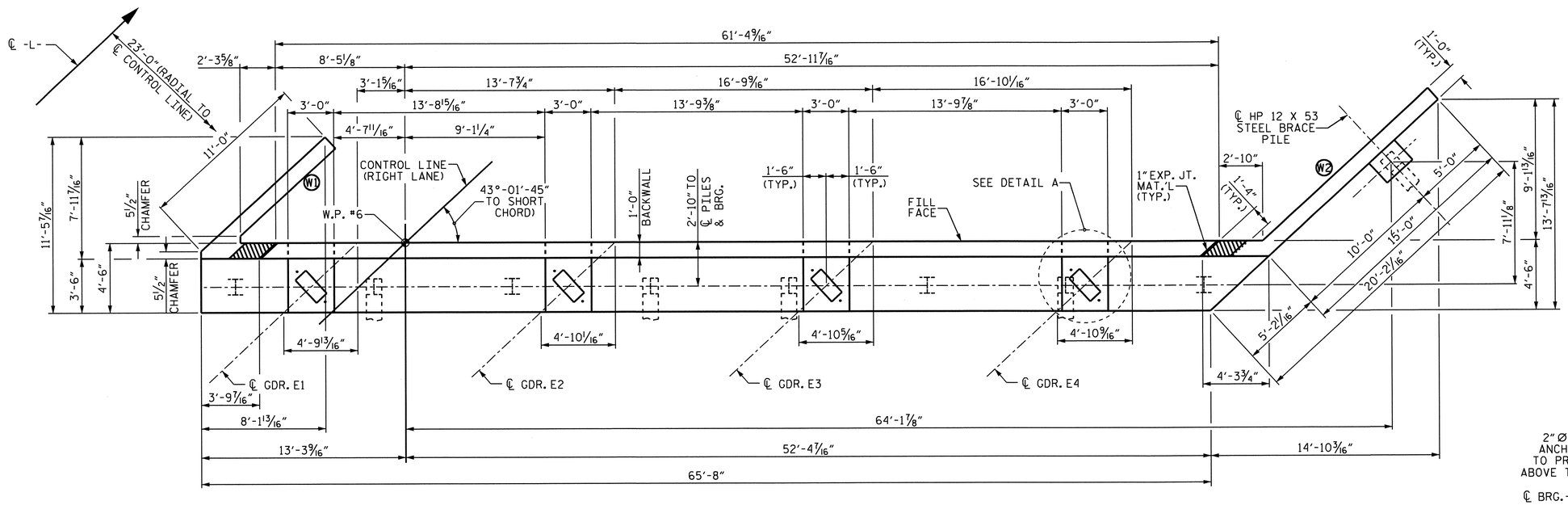

PLAN

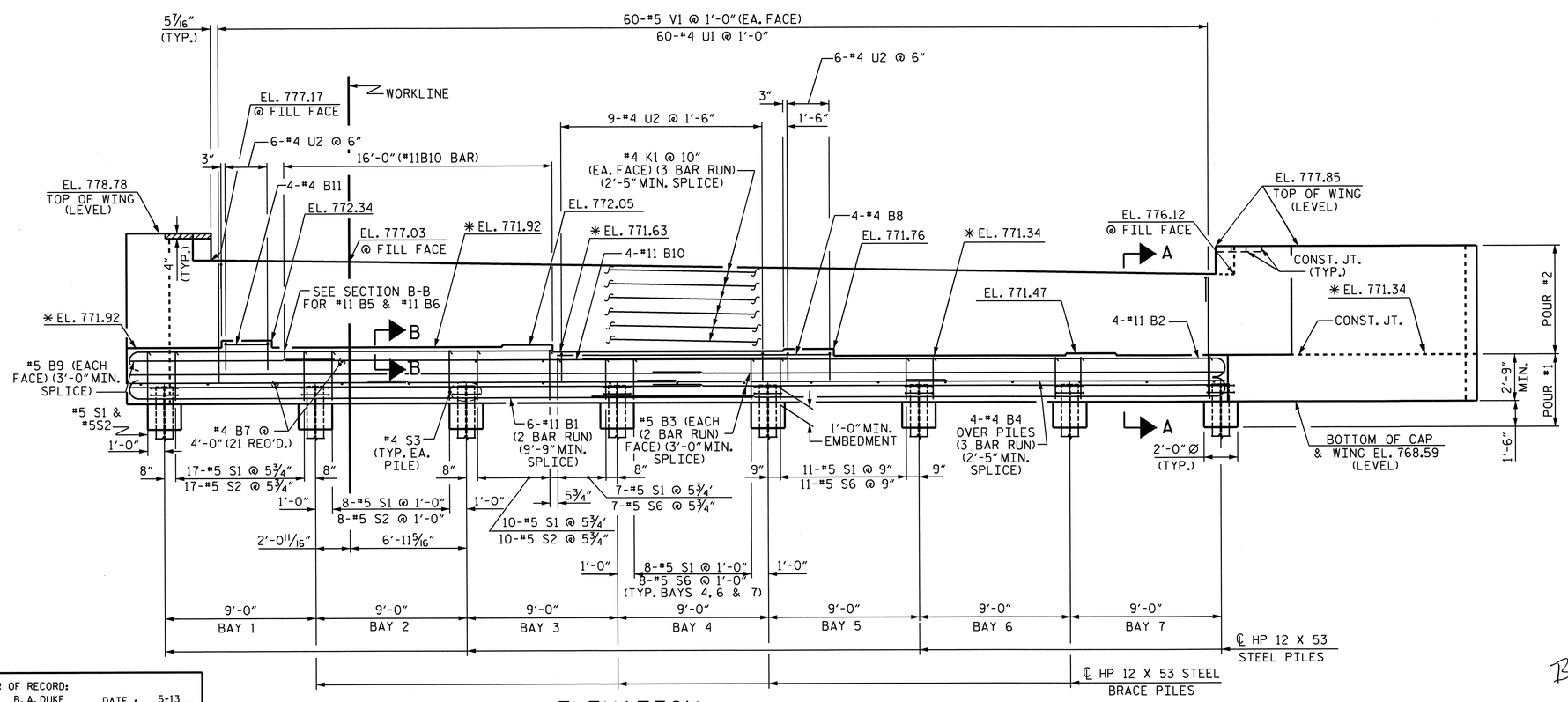

ELEVATION

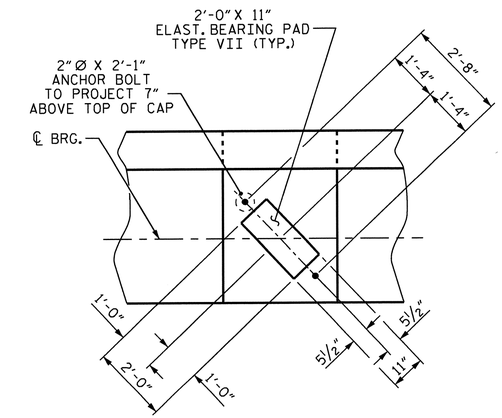

DETAIL A

(DIMENSIONS TYP. EA. BRG.)
(PILE NOT SHOWN FOR CLARITY)

PROJECT NO. R-2707B
CLEVELAND COUNTY
STATION: 340+00.0 -L-

SHEET 1 OF 3

STATE OF NORTH CAROLINA
DEPARTMENT OF TRANSPORTATION
RALEIGH

SUBSTRUCTURE
END BENT #2
(RIGHT LANE)

NORTH CAROLINA PROFESSIONAL SEAL 15825 ENGINEER BRUCE D. KLAPPENBACH
6-27-2013

REVISIONS						SHEET NO.
NO.	BY:	DATE:	NO.	BY:	DATE:	S-222
1			3			TOTAL SHEETS
2			4			266

STR. #6

DESIGN ENGINEER OF RECORD: B. A. DUKE DATE: 5-13
DRAWN BY: H. T. BARBOUR DATE: 5-2-12
CHECKED BY: D. A. GLADDEN DATE: 1-20-13

25-JUN-2013 09:24
K:\Structures\Plans\Bailey\STR5and6\TBARBOUR\Microstation\RIGHT LANE\substructure\R-2707B_SD_E*.dgn
tbarbour

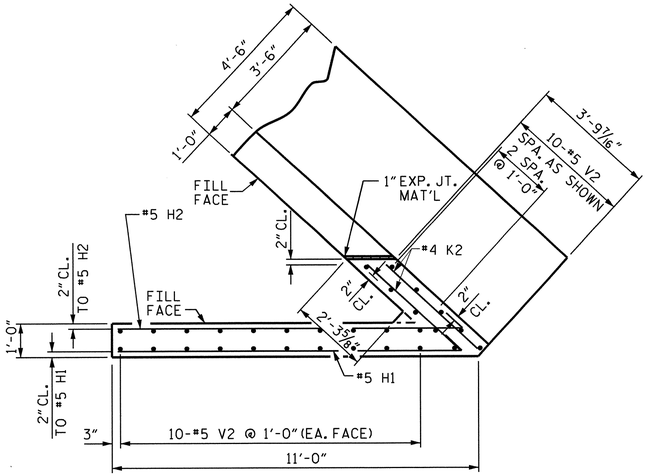

PLAN OF LEFT WING (W1)

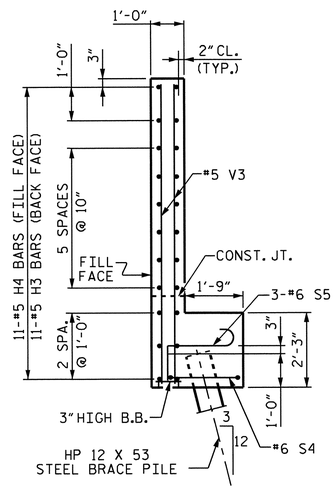

SECTION X-X

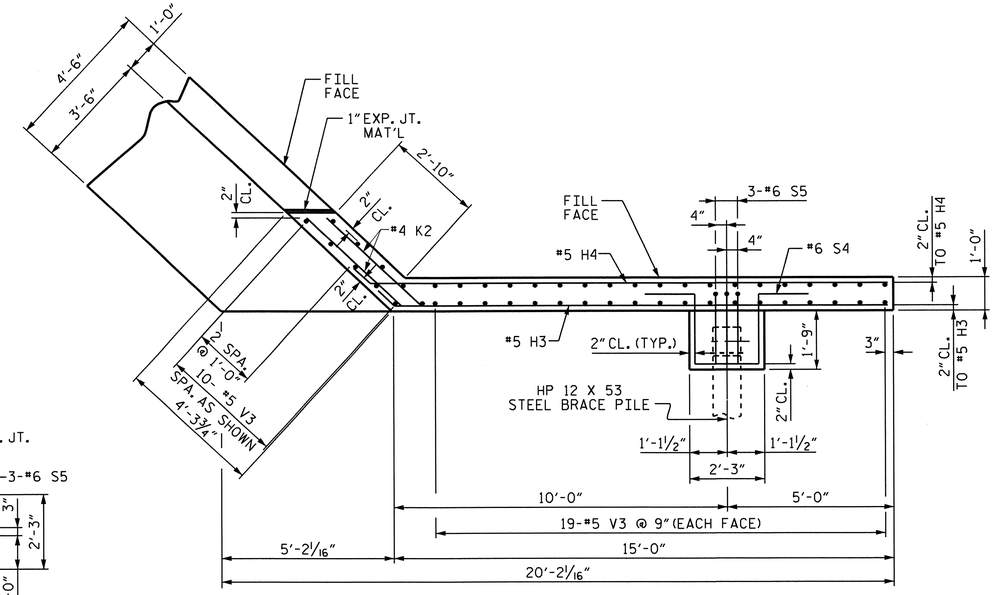

PLAN OF RIGHT WING (W2)

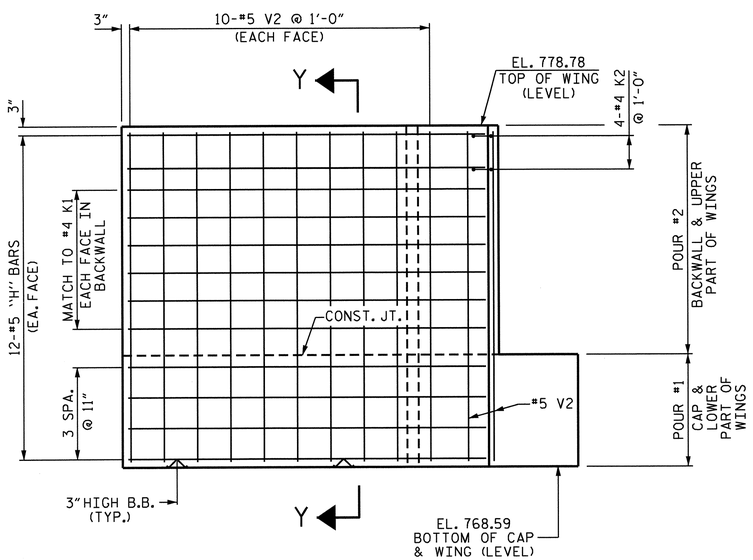

ELEVATION OF LEFT WING (W1)

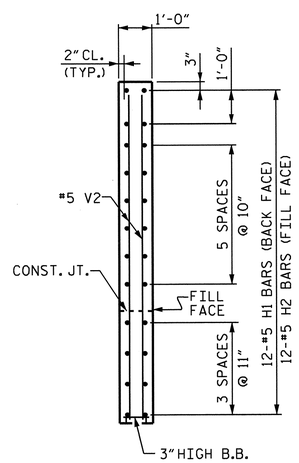

SECTION Y-Y

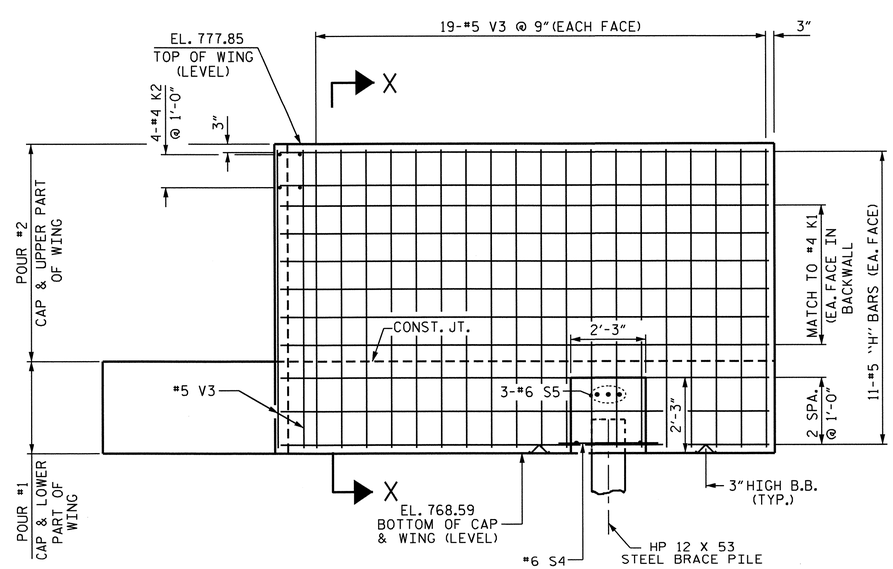

ELEVATION OF RIGHT WING (W2)

PROJECT NO. R-2707B

CLEVELAND COUNTY

STATION: 340+70.00 -L-

SHEET 2 OF 3

STATE OF NORTH CAROLINA
DEPARTMENT OF TRANSPORTATION
RALEIGH

SUBSTRUCTURE
END BENT #2
(RIGHT LANE)

NORTH CAROLINA PROFESSIONAL SEAL 15825 ENGINEER BRYAN D. KLAPPENBACH 6-27-2013

REVISIONS						SHEET NO.
NO.	BY:	DATE:	NO.	BY:	DATE:	S-223
1			3			TOTAL SHEETS
2			4			266

DESIGN ENGINEER OF RECORD: B. A. DUKE DATE: B. A. DUKE

DRAWN BY: H. T. BARBOUR DATE: 5-2-12

CHECKED BY: D. A. GLADDEN DATE: 1-20-13

14-MAY-2013 09:03
K:\Structures\Plans\Bailey\STR5and6\TBARBOUR\Microstation\RIGHT LANE\substructure\R-2707B_SD_E*.dgn
tbarbour

STR. #6

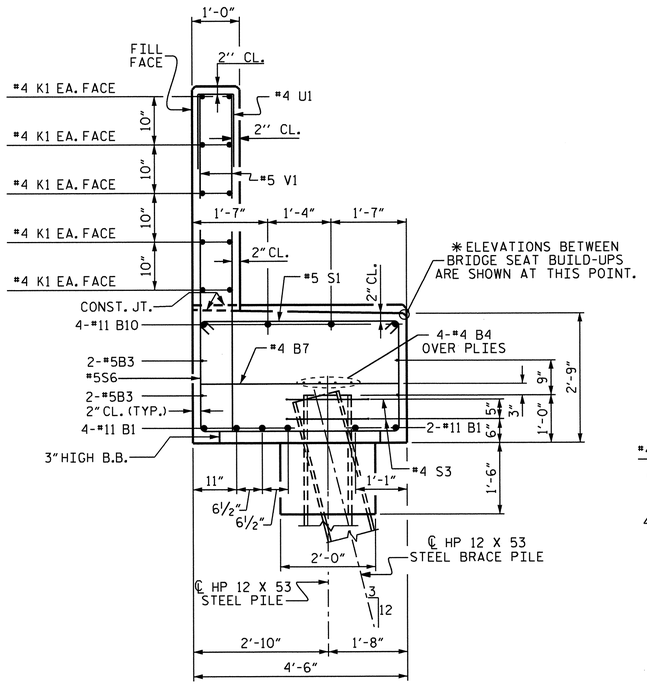

SECTION A-A

(SEE SHEET 1 OF 3)

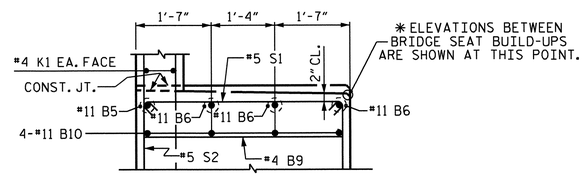

SECTION B-B

(SEE SHEET 1 OF 3)

BAR TYPES

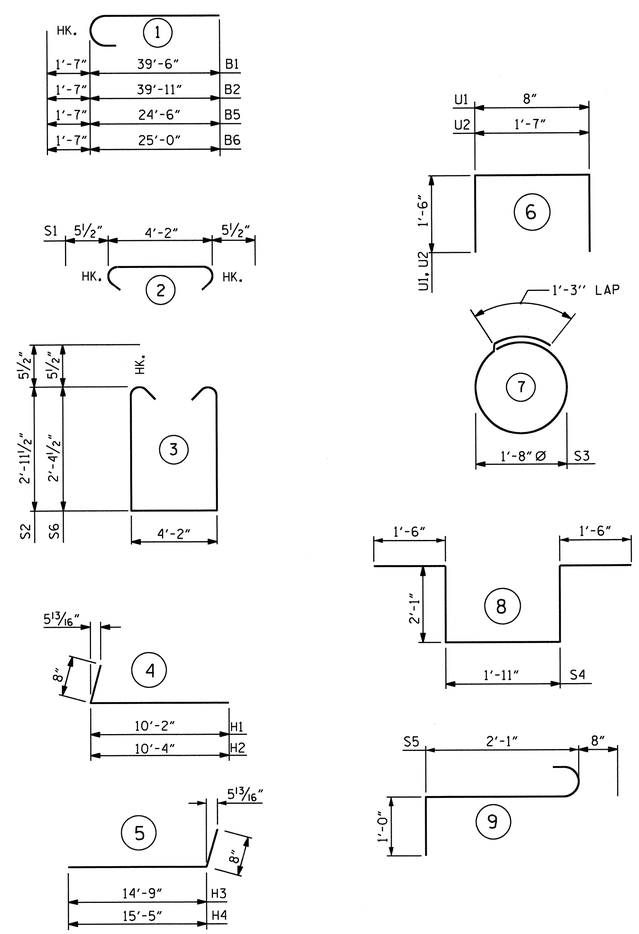

ALL BAR DIMENSIONS ARE OUT TO OUT.

BILL OF MATERIAL

END BENT #2

BAR	NO.	SIZE	TYPE	LENGTH	WEIGHT
B1	12	11	1	41'-1"	2619
B2	4	11	1	41'-6"	882
B3	8	5	STR	34'-3"	286
B4	12	4	STR	24'-2"	194
B5	1	11	1	26'-1"	139
B6	3	11	1	26'-7"	424
B7	21	4	STR	4'-2"	58
B8	4	4	STR	16'-8"	45
B9	2	5	STR	12'-1"	25
B10	4	11	STR	30'-0"	638
B11	4	4	STR	2'-8"	7
H1	12	5	4	10'-10"	136
H2	12	5	4	11'-0"	138
H3	11	5	5	15'-5"	177
H4	11	5	5	16'-1"	185
K1	36	4	STR	24'-11"	599
K2	8	4	STR	3'-9"	20
S1	78	5	2	5'-1"	414
S2	36	5	3	11'-0"	413
S3	16	4	7	6'-6"	69
S4	1	6	8	9'-1"	14
S5	3	6	9	3'-9"	17
S6	42	5	3	9'-10"	431
U1	60	4	6	3'-8"	147
U2	21	4	6	7'-2"	101
V1	60	5	STR	7'-2"	448
V2	30	5	STR	9'-10"	308
V3	48	5	STR	8'-11"	446
REINFORCING STEEL				LBS	9380

CLASS A CONCRETE BREAKDOWN

POUR #1

CAP, LOWER PART OF WINGS, CONCRETE COLLARS & PILE CAP — 37.5 CU. YDS.

POUR #2

BACKWALL & UPPER PART OF WINGS — 17.3 CU. YDS.

CLASS A CONCRETE TOTAL — 54.8 CU. YDS.

HP 12 x 53 STEEL PILES

NO. 9 LIN. FT. 315

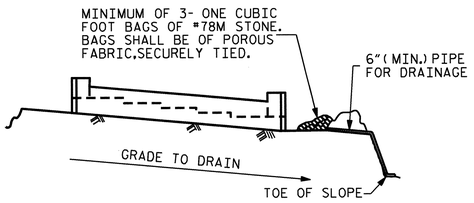

BAGGED STONE AND PIPE SHALL BE PLACED IMMEDIATELY AFTER COMPLETION OF END BENT EXCAVATION. PIPE MAY BE EITHER CONCRETE, CORRUGATED STEEL, CORRUGATED ALUMINUM ALLOY, OR CORRUGATED PLASTIC. PERFORATED PIPE WILL NOT BE ALLOWED.

BAGGED STONE SHALL REMAIN IN PLACE UNTIL THE ENGINEER DIRECTS THAT IT BE REMOVED. THE CONTRACTOR SHALL REMOVE AND DISPOSE OF SILT ACCUMULATIONS AT BAGGED STONE WHEN SO DIRECTED BY THE ENGINEER. BAGS SHALL BE REMOVED AND REPLACED WHENEVER THE ENGINEER DETERMINES THAT THEY HAVE DETERIORATED AND LOST THEIR EFFECTIVENESS.

NO SEPARATE PAYMENT WILL BE MADE FOR THIS WORK AND THE ENTIRE COST OF THIS WORK SHALL BE INCLUDED IN THE UNIT CONTRACT PRICE BID FOR THE SEVERAL PAY ITEMS.

TEMPORARY DRAINAGE AT END BENT

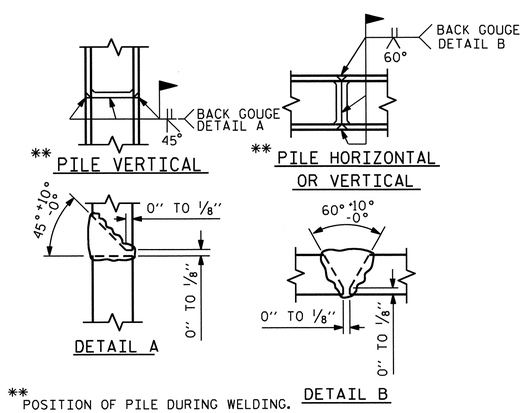

** POSITION OF PILE DURING WELDING.

PILE SPLICE DETAILS

PROJECT NO. R-2707B

CLEVELAND COUNTY

STATION: 340+70.00 -L-

SHEET 3 OF 3

STATE OF NORTH CAROLINA
DEPARTMENT OF TRANSPORTATION
RALEIGH

SUBSTRUCTURE END BENT #2 (RIGHT LANE)

NORTH CAROLINA PROFESSIONAL SEAL 15825 ENGINEER BRUCE D. KLAPPENBACH
6-27-2013

REVISIONS						SHEET NO.
NO.	BY:	DATE:	NO.	BY:	DATE:	S-224
1			3			TOTAL SHEETS
2			4			266

DESIGN ENGINEER OF RECORD: B. A. DUKE DATE: 5-13

DRAWN BY: H. T. BARBOUR DATE: 4-18-12

CHECKED BY: D. A. GLADDEN DATE: 1-20-13

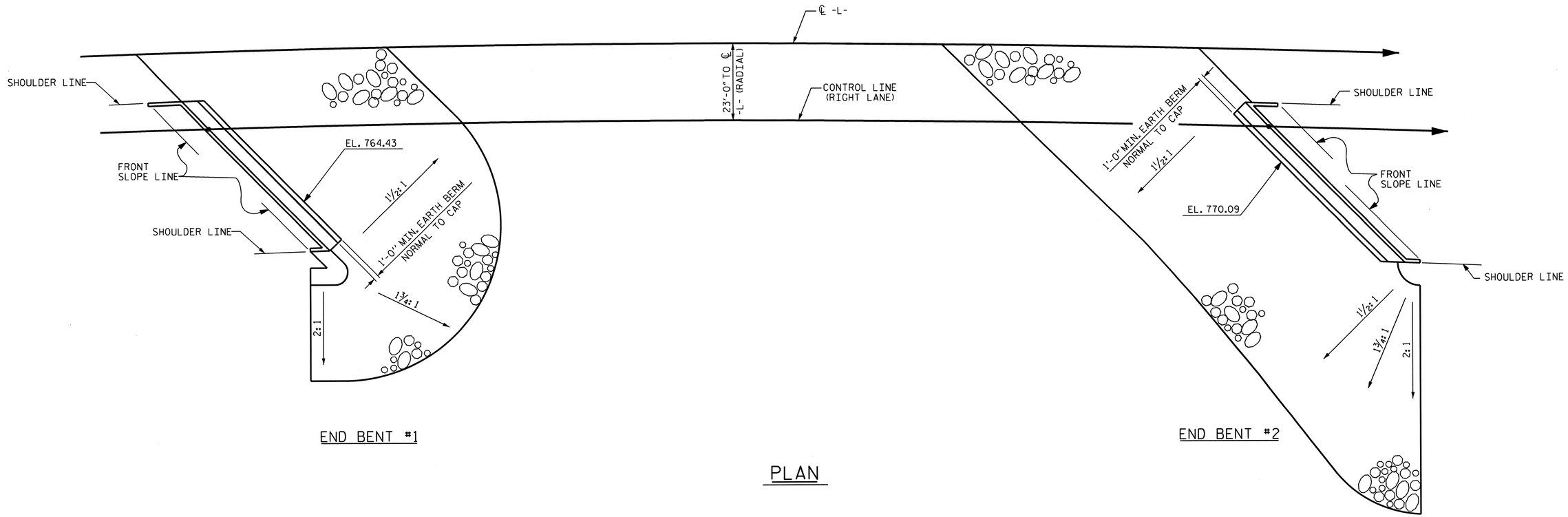

PLAN

ESTIMATED QUANTITIES		
BRIDGE @ STA. 340+70.00-L-	RIP RAP CLASS II (2'-0" THICK)	GEOTEXTILE FOR DRAINAGE
	TONS	SQUARE YARDS
END BENT 1	695	770
END BENT 2	1015	1125
TOTAL	1710	1895

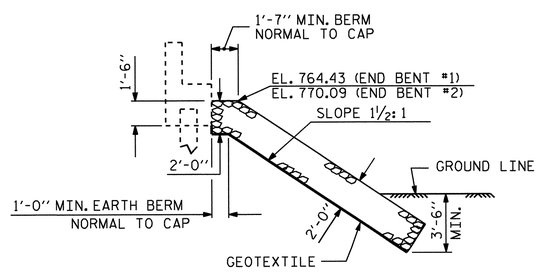

℄ SECTION

BERM RIP RAPPED

PROJECT NO. R-2707B

CLEVELAND COUNTY

STATION: 340+70.00-L-

STATE OF NORTH CAROLINA
DEPARTMENT OF TRANSPORTATION
RALEIGH

RIP RAP
(RIGHT LANE)

NORTH CAROLINA PROFESSIONAL SEAL 15825 ENGINEER BRUCE D. KLAPPENBACH
6-27-2013

REVISIONS						SHEET NO. S-225
NO.	BY:	DATE:	NO.	BY:	DATE:	TOTAL SHEETS 266
1			3			
2			4			

DESIGN ENGINEER OF RECORD: - DATE: -

DRAWN BY: H. T. BARBOUR DATE: 3-13-12

CHECKED BY: D. A. GLADDEN DATE: 8-12

25-JUN-2013 09:53
K:\Structures\Plans\Bailey\STR5and6\TBARBOUR\Microstation\RIGHT LANE\misc\R-2707B_SD_RR.dgn
tbarbour

STR. #6

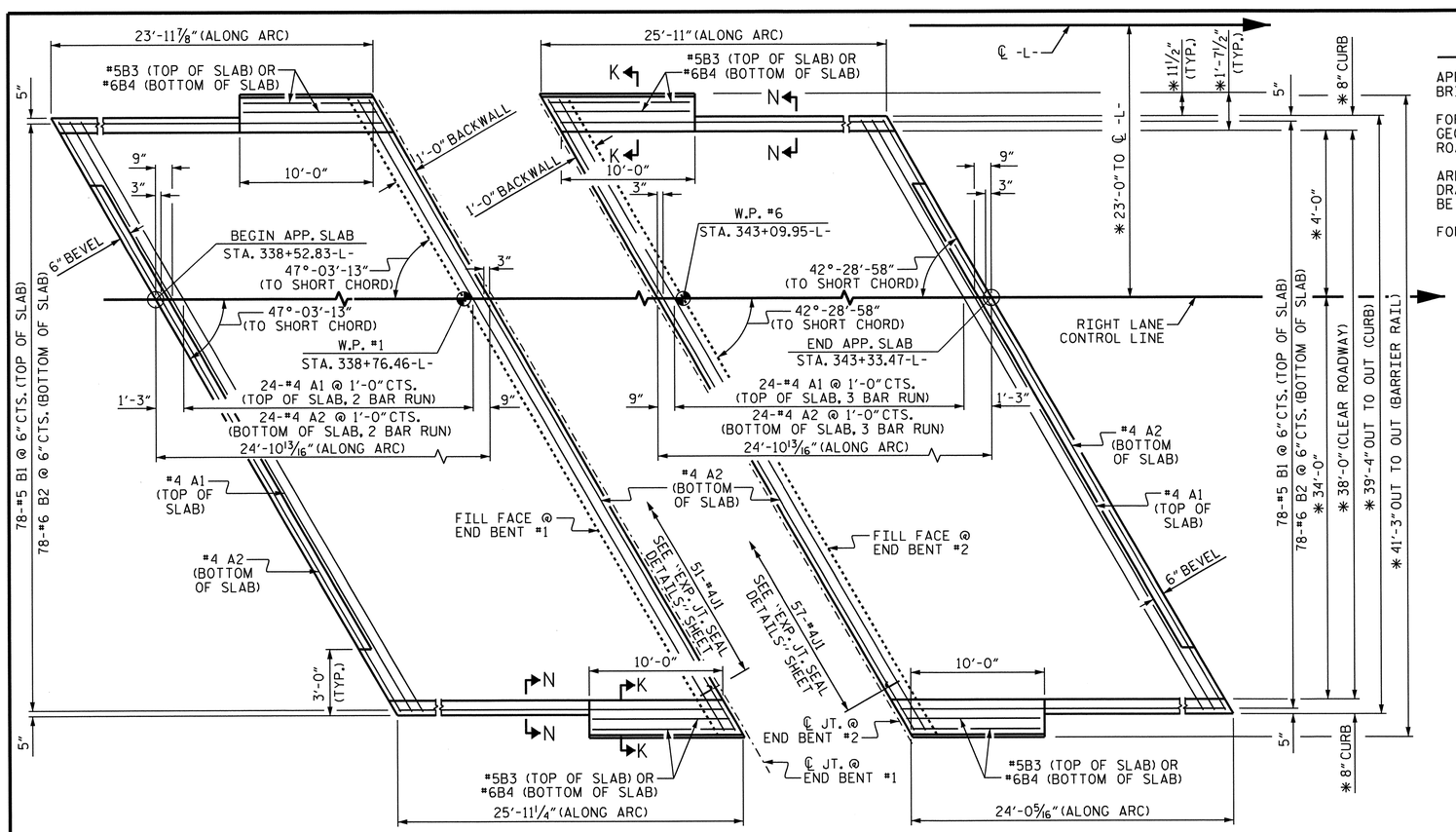

PLAN @ END BENT #1

PLAN @ END BENT #2

DIMENSIONS SHOWN ARE TYPICAL FOR BOTH APPROACH SLABS UNLESS OTHERWISE NOTED.

✱ DIMENSIONS ARE TO CIRCLES CONCENTRIC WITH ℄ -L-.

ARC OFFSETS ARE NEGLIGIBLE, THEREFORE NOT SHOWN.

NOTES

APPROACH SLAB SHALL NOT BE CONSTRUCTED PRIOR TO COMPLETION OF THE BRIDGE DECK.

FOR REINFORCED BRIDGE APPROACH FILL INCLUDING GEOTEXTILE, IMPERMEABLE GEOMEMBRANE, 4" Ø DRAINAGE PIPE, #78M STONE, AND SELECT MATERIAL, SEE ROADWAY PLANS.

AREA BETWEEN THE WINGWALL AND APPROACH SLAB SHALL BE GRADED TO DRAIN THE WATER AWAY FROM THE FILL FACE OF THE BRIDGE AND SHALL BE PAVED. SEE ROADWAY PLANS.

FOR EXPANSION JOINT SEALS, SEE SPECIAL PROVISIONS.

BILL OF MATERIAL

APPROACH SLAB AT EB #1

BAR	NO.	SIZE	TYPE	LENGTH	WEIGHT
✱ A1	50	#4	STR	29'-0"	969
A2	52	#4	STR	28'-10"	1002
✱ B1	78	#5	STR	23'-10"	1939
B2	78	#6	STR	24'-5"	2861
✱ B3	4	#5	STR	9'-8"	40
B4	4	#6	STR	9'-8"	58
✱ J1	51	#4	1	1'-5"	48
REINFORCING STEEL ✱✱				LBS.	3921
✱ EPOXY COATED REINFORCING STEEL ✱✱				LBS.	2996
CLASS AA CONCRETE ✱✱				C. Y.	44.6

APPROACH SLAB AT EB #2

BAR	NO.	SIZE	TYPE	LENGTH	WEIGHT
✱ A1	75	#4	STR	21'-7"	1081
A2	78	#4	STR	21'-5"	1116
✱ B1	78	#5	STR	23'-9"	1932
B2	78	#6	STR	24'-4"	2851
✱ B3	4	#5	STR	9'-8"	40
B4	4	#6	STR	9'-8"	58
✱ J1	57	#4	1	1'-5"	54
REINFORCING STEEL ✱✱				LBS.	4025
✱ EPOXY COATED REINFORCING STEEL ✱✱				LBS.	3107
CLASS AA CONCRETE ✱✱				C. Y.	44.6

BAR TYPE

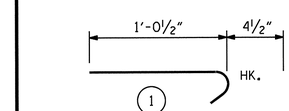

ALL BAR DIMENSIONS ARE OUT TO OUT

✱✱ QUANTITIES FOR BARRIER RAIL ARE NOT INCLUDED. SEE SHEET 2 OF 2.

THE QUANTITY OF #4 J1 BARS ON THE BILL OF MATERIAL IS BASED ON 1'-0" CENTERS. J1 BARS SHALL BE PLACED AT EACH VERTICAL STUD ANCHOR BOLT. IN THE EVENT THAT THE NUMBER OF VERTICAL STUD ANCHORS EXCEEDS THE NUMBER OF J1 BARS SPECIFIED, ADDITIONAL J1 BARS WILL NOT BE REQUIRED.

SPLICE LENGTHS

BAR SIZE	EPOXY COATED	UNCOATED
#4	2'-0"	1'-9"
#5	2'-6"	2'-2"
#6	3'-10"	2'-7"

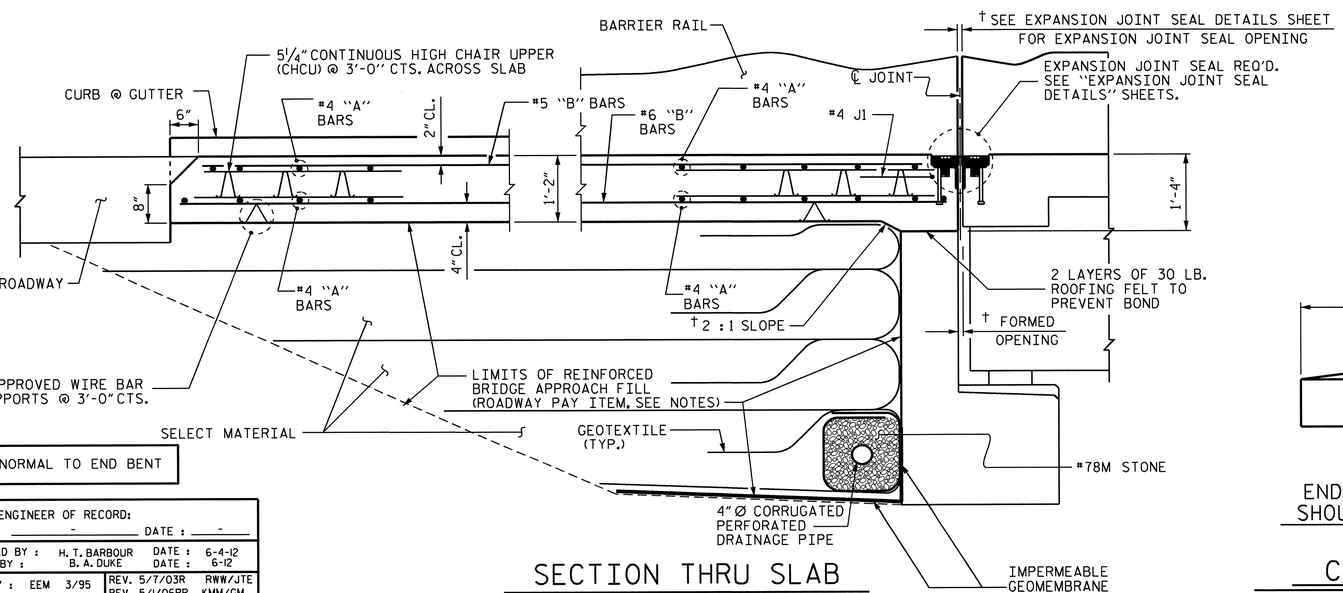

† NORMAL TO END BENT

SECTION THRU SLAB

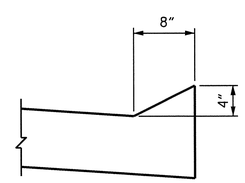

SECTION N-N

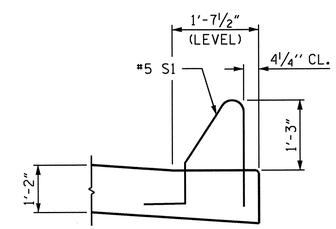

SECTION K-K

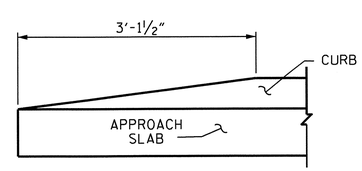

END OF CURB WITHOUT SHOULDER BERM GUTTER

CURB DETAILS

PROJECT NO. R-2707B

CLEVELAND COUNTY

STATION: 340+70.00-L-

SHEET 1 OF 2

STATE OF NORTH CAROLINA
DEPARTMENT OF TRANSPORTATION
RALEIGH

BRIDGE APPROACH SLAB FOR FLEXIBLE PAVEMENT (RIGHT LANE)

NORTH CAROLINA PROFESSIONAL SEAL 15825 ENGINEER BRUCE D. KLAPPENBACH 6-27-2013

REVISIONS						
NO.	BY:	DATE:	NO.	BY:	DATE:	
1			3			
2			4			

SHEET NO. S-226

TOTAL SHEETS 266

STR #6

DESIGN ENGINEER OF RECORD: - DATE: -			
ASSEMBLED BY: H. T. BARBOUR	DATE: 6-4-12		
CHECKED BY: B. A. DUKE	DATE: 6-12		
DRAWN BY: EEM 3/95	REV. 5/7/03R	RWW/JTE	
CHECKED BY: VAP 3/95	REV. 5/1/06RR	KMM/GM	
	REV. 10/1/11	MAA/GM	

25-JUN-2013 09:55
K:\Structures\Plans\Bailey\STR5and6\TBARBOUR\Microstation\RIGHT LANE\superstructure\R-2707B_SD_AS.dgn
tbarbour

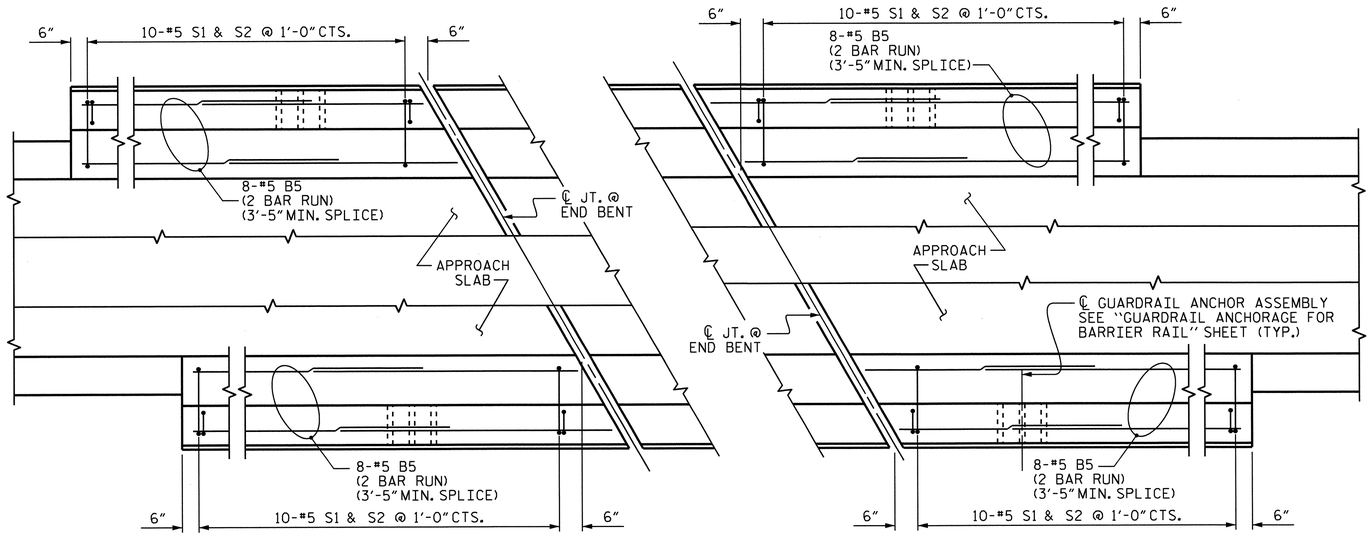

PLAN OF BARRIER RAIL

NOTES

THE COST OF THE BARRIER RAIL ON THE APPROACH SLAB SHALL BE INCLUDED IN THE LINEAR FOOT CONTRACT PRICE BID FOR "CONCRETE BARRIER RAIL".

THE BARRIER RAIL ON EACH APPROACH SLAB SHALL NOT BE CAST UNTIL ALL APPROACH SLAB CONCRETE HAS BEEN CAST AND HAS REACHED A MINIMUM COMPRESSIVE STRENGTH OF 3,000 PSI.

ALL REINFORCING STEEL IN BARRIER RAILS SHALL BE EPOXY COATED.

BAR TYPES

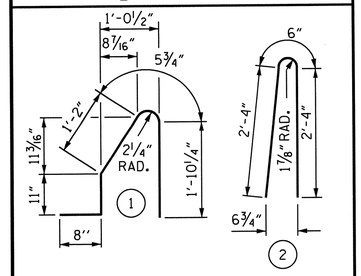

ALL BAR DIMENSIONS ARE OUT TO OUT

BILL OF MATERIAL

BARRIER RAIL ONLY

BAR	NO.	SIZE	TYPE	LENGTH	WEIGHT
* B5	64	#5	STR	7'-3"	484
* S1	40	#5	1	5'-1"	212
* S2	40	#5	2	5'-2"	216
* EPOXY COATED REINFORCING STEEL				LBS.	912
CLASS AA CONCRETE				C. Y.	4.3
CONCRETE BARRIER RAIL				43.0 LIN. FT.	

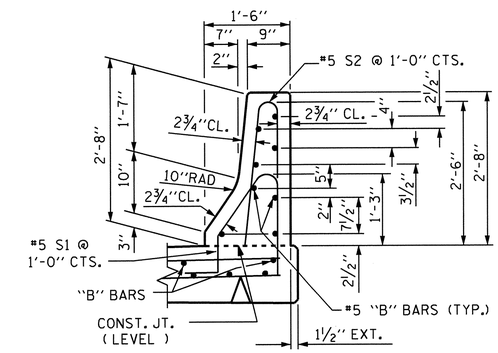

SECTION THRU RAIL

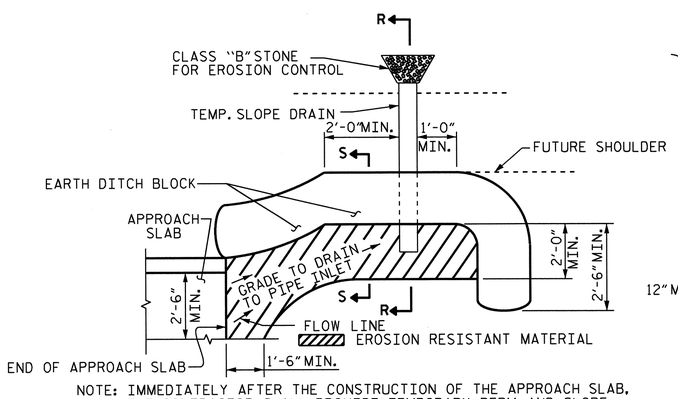

NOTE: IMMEDIATELY AFTER THE CONSTRUCTION OF THE APPROACH SLAB, THE CONTRACTOR SHALL PROVIDE TEMPORARY BERM AND SLOPE DRAIN. CONTRACTOR SHALL GRADE TO PIPE INLET AND PROVIDE EROSION RESISTANT MATERIAL AS SHOWN. THE EROSION RESISTANT MATERIAL SHALL BE EITHER 1) ASPHALT PLANT MIX, TYPE 1 OR TYPE 2, MIN. 2" DEPTH, 2) EROSION CONTROL MAT, OR 3) CONCRETE, AS DIRECTED BY THE ENGINEER. THE SLOPE DRAIN SHALL CONSIST OF A NON-PERFORATED TEMPORARY DRAINAGE PIPE, 12 INCHES IN DIAMETER.

PLAN VIEW

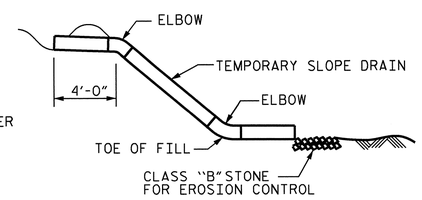

SECTION R-R

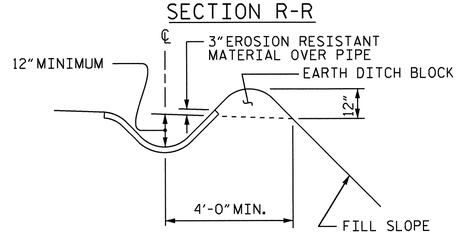

SECTION S-S

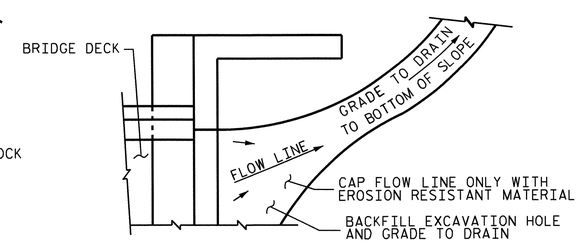

NOTE: IF THE APPROACH SLAB IS NOT CONSTRUCTED IMMEDIATELY AFTER THE BACKFILLING OF THE END BENT EXCAVATION, GRADE TO DRAIN TO THE BOTTOM OF THE SLOPE AND PROVIDE EROSION RESISTANT MATERIAL, SUCH AS FIBERGLASS ROVING OR AS DIRECTED BY THE ENGINEER TO PREVENT SOIL EROSION AND TO PROTECT THE AREA ADJACENT TO THE STRUCTURE. THE CONTRACTOR WILL BE REQUIRED TO REMOVE THESE MATERIALS PRIOR TO CONSTRUCTION OF THE APPROACH SLAB.

TEMPORARY DRAINAGE DETAIL

TEMPORARY BERM AND SLOPE DRAIN DETAILS

(TO BE USED WHEN SHOULDER BERM GUTTER IS REQUIRED)

PROJECT NO. R-2707B
CLEVELAND COUNTY
STATION: 340+70.00 -L-

SHEET 2 OF 2

STATE OF NORTH CAROLINA
DEPARTMENT OF TRANSPORTATION
RALEIGH

BRIDGE APPROACH SLAB DETAILS (RIGHT LANE)

NORTH CAROLINA PROFESSIONAL SEAL 15825 ENGINEER BRUCE D. KLAPPENBACH 6-27-2013

REVISIONS						SHEET NO.
NO.	BY:	DATE:	NO.	BY:	DATE:	S-227
1			3			TOTAL SHEETS
2			4			266

DESIGN ENGINEER OF RECORD: - DATE: -			
ASSEMBLED BY: H. T. BARBOUR	DATE: 6-4-12		
CHECKED BY: B. A. DUKE	DATE: 6-12		
DRAWN BY: FCJ 11/88	REV. 5/7/03	RWW/JTE	
CHECKED BY: ARB 11/88	REV. 5/1/06	RRR	MAA/KMM
	REV. 10/1/11		MAA/GM

STR. #6 STD. NO. BAS4 (SHT 3a)

27-JUN-2013 08:41
k:\Structures\Plans\Bailey\STR5and6\TBARBOUR\Microstation\RIGHT LANE\superstructure\R-2707B_SD_AS.dgn
tbarbour

F.A. PROJECT NO.: NHF-74(107)

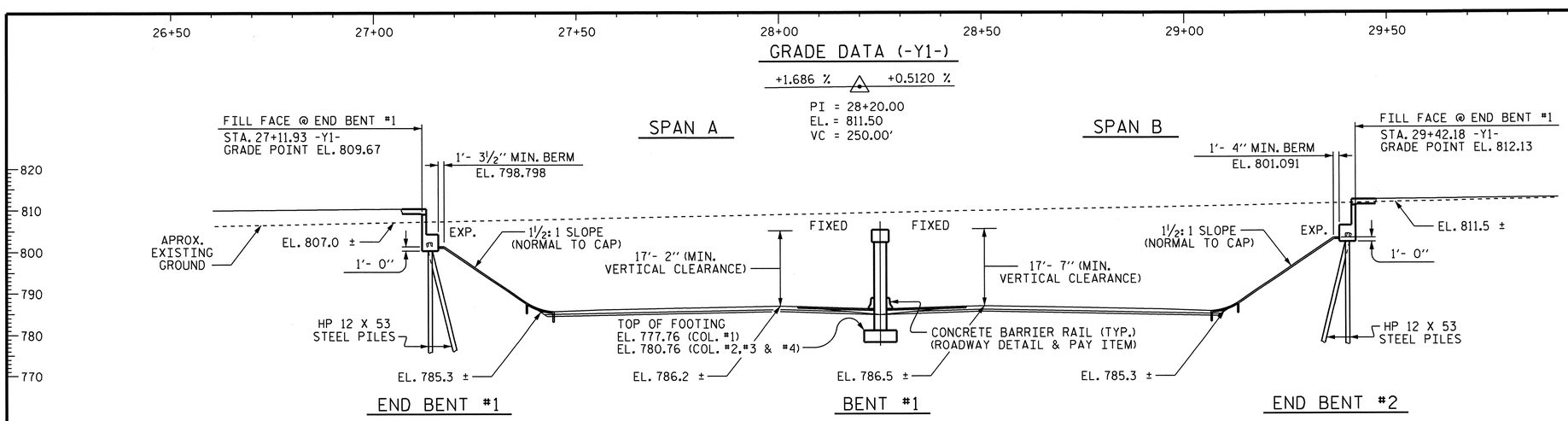

SECTION ALONG ℄ -Y1-

(SECTION THROUGH END BENTS AND BENT ARE AT RIGHT ANGLES)

HORIZONTAL CURVE DATA (-Y1-)

P.I. = STA. 24+03.61
Δ = 11°46'11.9" (RT.)
D = 1°00'00.0"
L = 1177.00'
T = 590.58'
R = 5729.58

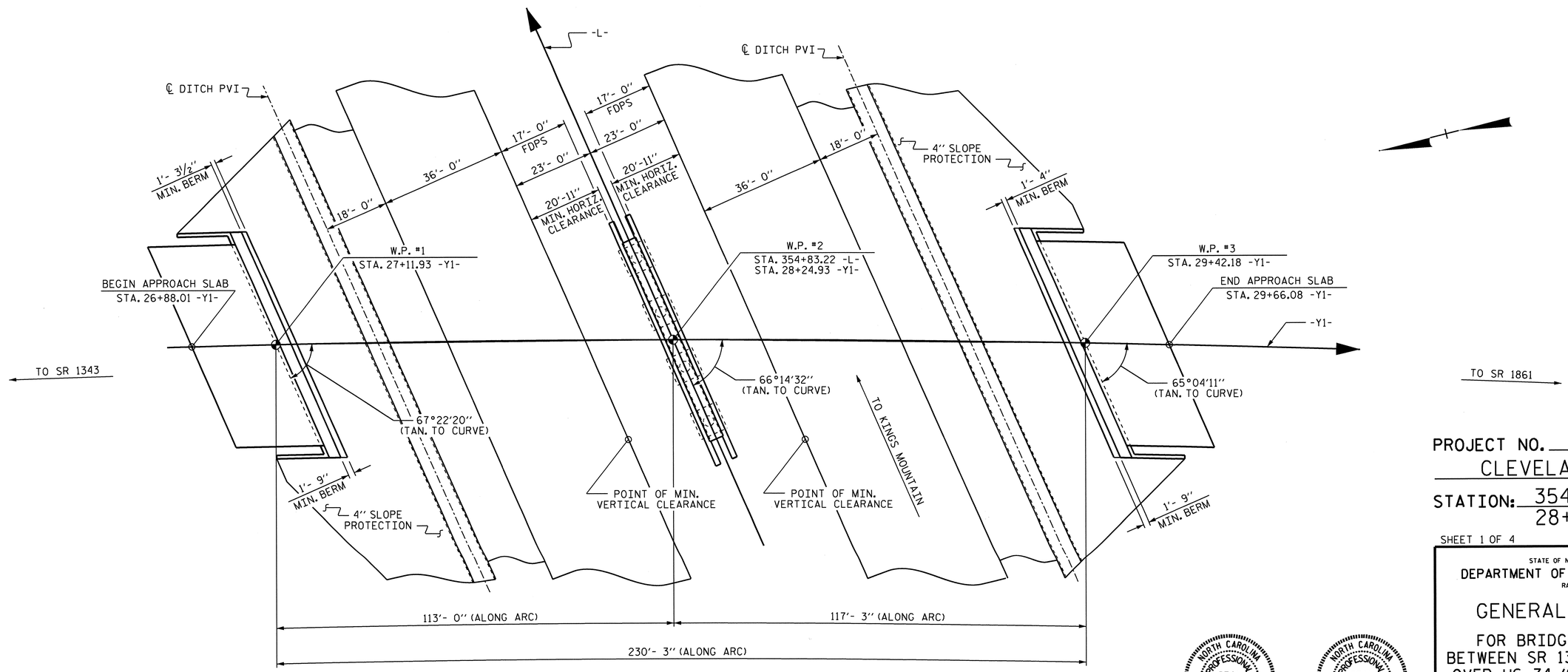

PLAN

PILES IN END BENTS ARE NOT SHOWN FOR CLARITY

PROJECT NO. R-2707B
CLEVELAND COUNTY
STATION: 354+83.22 -L-
28+24.93 -Y1-

SHEET 1 OF 4 BRIDGE NO. 463

STATE OF NORTH CAROLINA
DEPARTMENT OF TRANSPORTATION
RALEIGH

GENERAL DRAWING

FOR BRIDGE ON NC 226
BETWEEN SR 1343 AND SR 1861
OVER US 74 (SHELBY BYPASS)

NORTH CAROLINA PROFESSIONAL SEAL 13014 ENGINEER QUANG H. NGUYEN
Quang H. Nguyen 6-27-13

NORTH CAROLINA PROFESSIONAL SEAL 15825 ENGINEER BRUCE D. KLAPPENBACH
6-27-2013

REVISIONS						SHEET NO.
NO.	BY:	DATE:	NO.	BY:	DATE:	S-228
1			3			TOTAL SHEETS
2			4			266

DESIGN ENGINEER OF RECORD: S. T. CHAMPION DATE: 5-13-13
DRAWN BY: D. A. GLADDEN DATE: 10-25-12
CHECKED BY: S. CHAMPION DATE: 5-9-13

24-JUN-2013 16:53
R:\Structures\Plans\Bailey\Str7\dgladden\Microstation\R2707B_SD_pgd.dgn
dgladden

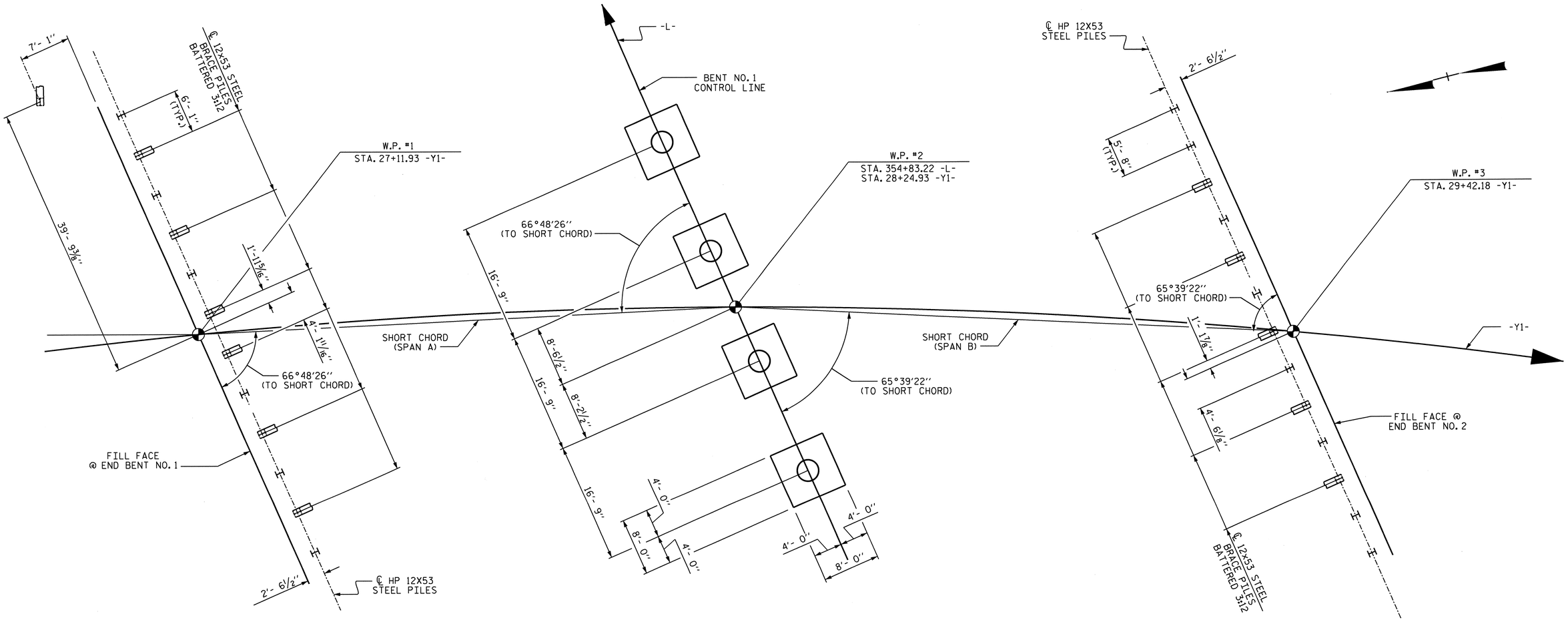

END BENT NO. 1

BENT NO. 1

END BENT NO. 2

FOUNDATION LAYOUT

(DIMENSIONS LOCATING BRACE PILES ARE SHOWN TO THE PILE CENTERLINE AT THE BOTTOM OF CAP)

NOTES

FOR PILES, SEE SECTION 450 OF THE STANDARD SPECIFICATIONS.

PILES AT END BENT NO. 1 ARE DESIGNED FOR A FACTORED RESISTANCE OF 105 TONS PER PILE.

DRIVE PILES AT END BENT NO. 1 TO A REQUIRED DRIVING RESISTANCE OF 175 TONS PER PILE.

THE SPREAD FOOTINGS AT BENT NO. 1 ARE DESIGNED FOR A FACTORED RESISTANCE OF 30.0 TSF. CHECK FIELD CONDITIONS FOR THE REQUIRED RESISTANCE OF 100.0 TSF JUST BEFORE PLACING CONCRETE.

CARRY IN SPREAD FOOTINGS AT BENT NO. 1 AT LEAST 12" INTO ROCK WITH MINIMUM THICKNESS AS SHOWN ON THE PLANS.

PILES AT END BENT NO. 2 ARE DESIGNED FOR A FACTORED RESISTANCE OF 100 TONS PER PILE.

DRIVE PILES AT END BENT NO. 2 TO A REQUIRED DRIVING RESISTANCE OF 167 TONS PER PILE.

FOR BLASTING ADJACENT TO HIGHWAY STRUCTURES, SEE ARTICLE 410-9 OF THE STANDARD SPECIFICATIONS.

PROJECT NO. R-2707B
CLEVELAND COUNTY
STATION: 354+83.22 -L-

SHEET 2 OF 4

STATE OF NORTH CAROLINA
DEPARTMENT OF TRANSPORTATION
RALEIGH

GENERAL DRAWING

FOR BRIDGE ON NC 226 BETWEEN SR 1343 AND SR 1861 OVER US 74 (SHELBY BYPASS)

NORTH CAROLINA PROFESSIONAL SEAL 15822 ENGINEER B.D. KLAPPENBACH
6-27-2013

REVISIONS						SHEET NO.
NO.	BY:	DATE:	NO.	BY:	DATE:	S-229
1			3			TOTAL SHEETS
2			4			266

DESIGN ENGINEER OF RECORD: S.T. CHAMPION DATE: 5-13-13
DRAWN BY: D. A. GLADDEN DATE: 10-25-12
CHECKED BY: B.D. KLAPPENBACH DATE: 5-9-13

24-JUN-2013 16:53
R:\Structures\Plans\Bailey\Str7\dgladden\Microstation\R2707B_SD_pgd.dgn
dgladden

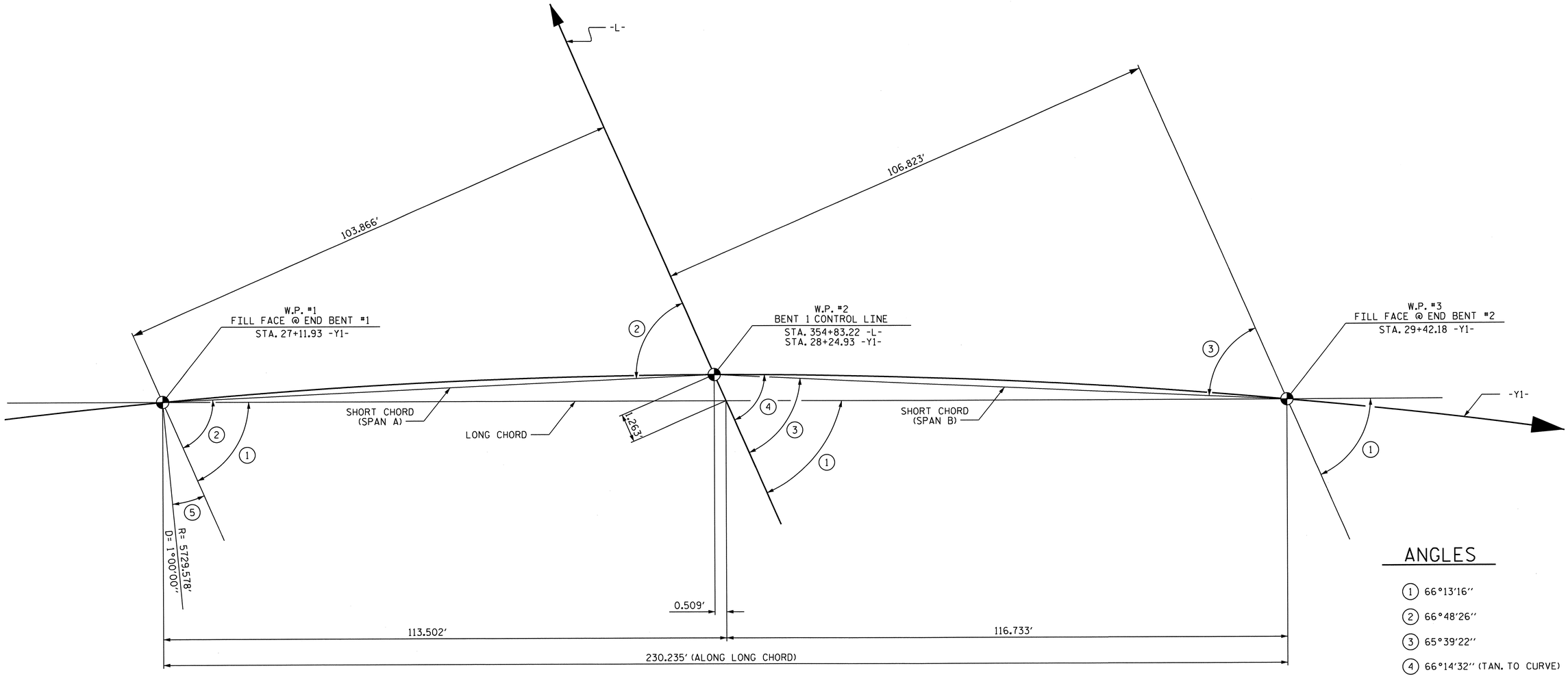

ANGLES

1. 66°13'16"
2. 66°48'26"
3. 65°39'22"
4. 66°14'32" (TAN. TO CURVE)
5. 22°37'40"

LONG CHORD LAYOUT

NOTE: ALL BENTS ARE PARALLEL.

PROJECT NO. R-2707B

CLEVELAND COUNTY

STATION: 354+83.22 -L-

SHEET 3 OF 4

STATE OF NORTH CAROLINA
DEPARTMENT OF TRANSPORTATION
RALEIGH

GENERAL DRAWING

FOR BRIDGE ON NC 226
BETWEEN SR 1343 AND SR 1861
OVER US 74 (SHELBY BYPASS)

NORTH CAROLINA PROFESSIONAL SEAL 15825 ENGINEER BRUCE D. KLAPPENBACH
6-27-2013

REVISIONS						SHEET NO.
NO.	BY:	DATE:	NO.	BY:	DATE:	S-230
1			3			TOTAL SHEETS
2			4			266

DESIGN ENGINEER OF RECORD: S. T. CHAMPION DATE: 5-13-13
DRAWN BY: D. A. GLADDEN DATE: 10-25-12
CHECKED BY: S. CHAMPION DATE: 5-9-13

24-JUN-2013 16:53
R:\Structures\Plans\Bailey\Str7\dgladden\Microstation\R2707B_SD_pgd.dgn
dgladden

BENCH MARK #16 : 8'' NAIL IN BASE OF 24'' RED OAK, 228.27' RT. OF STA. 342+82.56 -L-, EL.735.98'

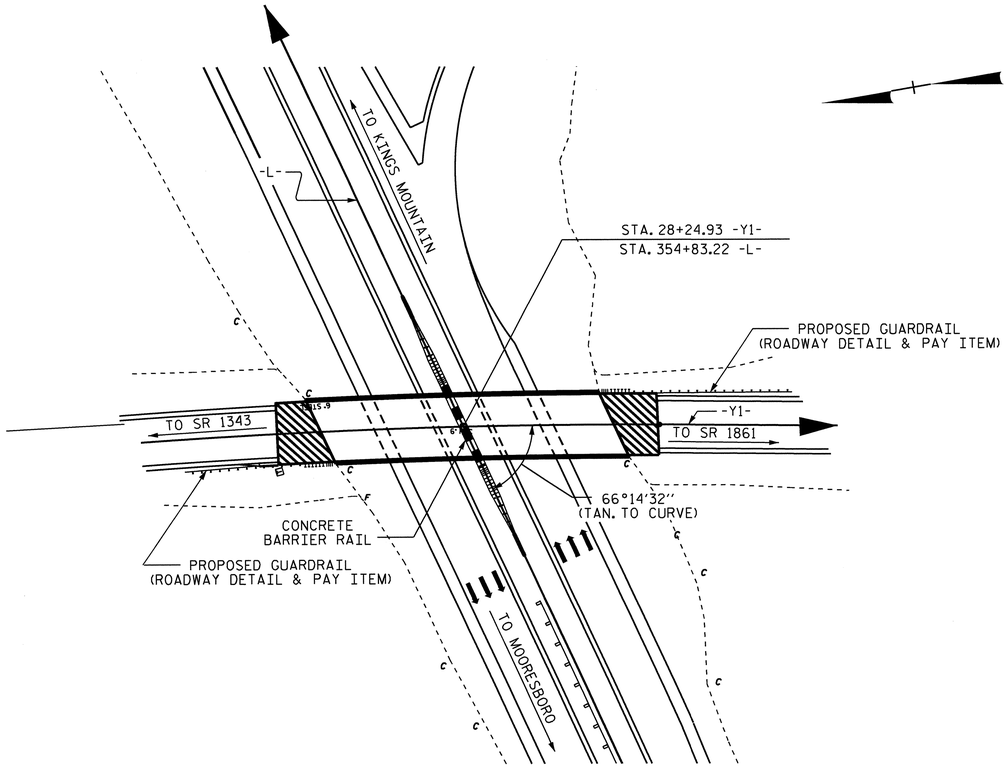

FOR UTILITY INFORMATION, SEE UTILITY PLANS AND SPECIAL PROVISIONS.

LOCATION SKETCH

NOTES

ASSUMED LIVE LOAD = HL-93 OR ALTERNATE LOADING.

THIS BRIDGE HAS BEEN DESIGNED IN ACCORDANCE WITH THE AASHTO LRFD BRIDGE DESIGN SPECIFICATIONS.

THIS BRIDGE IS LOCATED IN SEISMIC ZONE 1.

FOR SUBMITTAL OF WORKING DRAWINGS, SEE SPECIAL PROVISIONS.

FOR FALSEWORK AND FORMWORK, SEE SPECIAL PROVISIONS.

FOR CRANE SAFETY, SEE SPECIAL PROVISIONS.

THE CONTRACTOR SHALL PROVIDE INDEPENDENT ASSURANCE SAMPLES OF REINFORCING STEEL AS FOLLOWS: FOR PROJECTS REQUIRING UP TO 400 TONS OF REINFORCING STEEL, ONE 30 INCH SAMPLE OF EACH SIZE BAR USED, AND FOR PROJECTS REQUIRING OVER 400 TONS OF REINFORCING STEEL, TWO 30 INCH SAMPLES OF EACH SIZE BAR USED. THE BARS FROM WHICH THE SAMPLES ARE TAKEN MUST THEN BE SPLICED WITH REPLACEMENT BARS OF THE SIZE AND LENGTH OF THE SAMPLE, PLUS A MINIMUM LAP SPLICE OF THIRTY BAR DIAMETERS. PAYMENT FOR THE SAMPLES OF REINFORCING STEEL SHALL BE CONSIDERED INCIDENTAL TO VARIOUS PAY ITEMS.

PRESTRESSED CONCRETE DECK PANELS MAY BE USED IN LIEU OF METAL STAY-IN-PLACE FORMS IN ACCORDANCE WITH ARTICLE 420-3 OF THE STANDARD SPECIFICATIONS.

REMOVABLE FORMS MAY BE USED IN LIEU OF METAL STAY-IN-PLACE FORMS IN ACCORDANCE WITH ARTICLE 420-3 OF THE STANDARD SPECIFICATIONS.

WORK SHALL NOT BE STARTED ON THIS BRIDGE UNTIL ROADWAY SECTION HAS BEEN EXCAVATED.

FOR OTHER DESIGN DATA AND GENERAL NOTES, SEE SHEET SN.

FOR GROUT FOR STRUCTURES, SEE SPECIAL PROVISIONS.

NEEDLE BEAMS WILL NOT BE ALLOWED UNLESS OTHERWISE CALLED FOR ON THE PLANS OR APPROVED BY THE ENGINEER.

THE CLASS AA CONCRETE IN THE BRIDGE DECK SHALL CONTAIN FLY ASH OR GROUND GRANULATED BLAST FURNACE SLAG AT THE SUBSTITUTION RATE SPECIFIED IN ARTICLE 1024-1 AND IN ACCORDANCE WITH ARTICLES 1024-5 AND 1024-6 OF THE STANDARD SPECIFICATIONS. NO PAYMENT WILL BE MADE FOR THIS SUBSTITUTION AS IT IS CONSIDERED INCIDENTAL TO THE COST OF THE REINFORCED CONCRETE DECK SLAB.

FOR EROSION CONTROL MEASURES, SEE EROSION CONTROL PLANS.

FOR PLACING LOAD ON STRUCTURE MEMBERS, SEE SPECIAL PROVISIONS.

TOTAL BILL OF MATERIAL

	FOUNDATION EXCAVATION	REINFORCED CONCRETE DECK SLAB	GROOVING BRIDGE FLOORS	CLASS A CONCRETE	BRIDGE APPROACH SLABS	REINFORCING STEEL	SPIRAL COLUMN REINFORCING STEEL	MODIFIED 72" PRESTRESSED CONCRETE GIRDERS		HP 12 X 53 STEEL PILES		CONCRETE BARRIER RAIL	4" SLOPE PROTECTION	ELASTOMERIC BEARINGS	EXPANSION JOINT SEALS
	LUMP SUM	SQ.FT.	SQ.FT.	CU.YDS.	LUMP SUM	LBS.	LBS.	NO.	LIN.FT.	NO.	LIN.FT.	LIN.FT.	SQ.YDS.	LUMP SUM	LUMP SUM
SUPERSTRUCTURE		13504	14579		LUMP SUM			12	1348.91			497.17		LUMP SUM	LUMP SUM
END BENT NO.1				74.5		9331				13	325		464		
BENT NO.1	LUMP SUM			91.3		14427	1749								
END BENT NO.2				76.6		10510				13	195		594		
TOTAL	LUMP SUM	13504	14579	242.4	LUMP SUM	34268	1749	12	1348.91	26	520	497.17	1058	LUMP SUM	LUMP SUM

PROJECT NO. R-2707B
CLEVELAND COUNTY
STATION: 354+83.22 -L-

SHEET 4 OF 4

STATE OF NORTH CAROLINA
DEPARTMENT OF TRANSPORTATION
RALEIGH

GENERAL DRAWING

FOR BRIDGE ON NC 226
BETWEEN SR 1343 AND SR 1861
OVER US 74 (SHELBY BYPASS)

NORTH CAROLINA PROFESSIONAL SEAL 15825 ENGINEER BRIDGE B. D. KLAPPENBACH
6-27-2013

REVISIONS						SHEET NO.
NO.	BY:	DATE:	NO.	BY:	DATE:	S-231
1			3			TOTAL SHEETS
2			4			266

DESIGN ENGINEER OF RECORD: S. T. CHAMPION DATE : 5-13-13
DRAWN BY : D. A. GLADDEN DATE : 10-25-12
CHECKED BY : B. KLAPPENBACH DATE : 5-9-13

24-JUN-2013 16:54
R:\Structures\Plans\Bailey\Str7\dgladden\Microstation\R2707B_SD_pgd.dgn
dgladden

LOAD AND RESISTANCE FACTOR RATING (LRFR) SUMMARY FOR PRESTRESSED CONCRETE GIRDERS

LEVEL		VEHICLE	WEIGHT (W) (TONS)	CONTROLLING LOAD RATING (#)	MINIMUM RATING FACTORS (RF)	TONS = W X RF	STRENGTH I LIMIT STATE											SERVICE III LIMIT STATE						COMMENT NUMBER
								MOMENT					SHEAR						MOMENT					
							LIVELOAD FACTORS	DISTRIBUTION FACTORS (DF)	RATING FACTOR	SPAN	GIRDER LOCATION	DISTANCE FROM LEFT END OF SPAN (ft)	DISTRIBUTION FACTORS (DF)	RATING FACTOR	SPAN	GIRDER LOCATION	DISTANCE FROM LEFT END OF SPAN (ft)	LIVELOAD FACTORS	DISTRIBUTION FACTORS (DF)	RATING FACTOR	SPAN	GIRDER LOCATION	DISTANCE FROM LEFT END OF SPAN (ft)	
DESIGN LOAD RATING		HL-93(Inv)	N/A	1	1.02	--	1.75	0.869	1.55	A	ER	54.487	1.036	1.25	A	I	32.681	0.80	1.041	1.02	B	I	56.584	
		HL-93(Opr)	N/A	--	1.62	--	1.35	0.869	2.01	A	ER	54.487	1.036	1.62	A	I	32.681	N/A	--	--	--	--	--	
		HS-20(Inv)	36.000	2	1.46	52.474	1.75	0.869	2.21	A	ER	54.487	1.036	1.61	A	I	32.681	0.80	0.822	1.46	A	I	54.468	
		HS-20(Opr)	36.000	--	2.08	74.997	1.35	0.869	2.87	A	ER	54.487	1.036	2.08	A	I	32.681	N/A	--	--	--	--	--	
LEGAL LOAD RATING	SV	SNSH	13.500	--	3.5	47.229	1.4	0.869	6.63	A	ER	54.487	1.036	4.87	A	I	32.681	0.80	0.822	3.50	A	I	54.468	
		SNGARBS2	20.000	--	2.52	50.315	1.4	0.869	4.77	A	ER	54.487	1.036	3.43	A	I	32.681	0.80	0.822	2.52	A	I	54.468	
		SNAGRIS2	22.000	--	2.35	51.614	1.4	0.869	4.45	A	ER	54.487	1.036	3.18	A	I	32.681	0.80	0.822	2.35	A	I	54.468	
		SNCOTTS3	27.250	--	1.74	47.366	1.4	0.869	3.3	A	ER	54.487	1.036	2.43	A	I	32.681	0.80	0.822	1.74	A	I	54.468	
		SNAGGRS4	34.925	--	1.42	49.501	1.4	0.869	2.69	A	ER	54.487	1.036	2	A	I	32.681	0.80	0.822	1.42	A	I	54.468	
		SNS5A	35.550	--	1.39	49.356	1.4	0.869	2.63	A	ER	54.487	1.036	2.01	A	I	32.681	0.80	0.822	1.39	A	I	54.468	
		SNS6A	39.950	--	1.26	50.319	1.4	0.869	2.39	A	ER	54.487	1.036	1.83	A	I	32.681	0.80	0.822	1.26	A	I	54.468	
		SNS7B	42.000	--	1.2	50.356	1.4	0.869	2.27	A	ER	54.487	1.036	1.79	A	I	32.681	0.80	0.822	1.20	A	I	54.468	
	TTST	TNAGRIT3	33.000	--	1.53	50.549	1.4	0.869	2.9	A	ER	54.487	1.036	2.18	A	I	32.681	0.80	0.822	1.53	A	I	54.468	
		TNT4A	33.075	--	1.54	50.760	1.4	0.869	2.91	A	ER	54.487	1.036	2.13	A	I	32.681	0.80	0.822	1.53	A	I	54.468	
		TNT6A	41.600	--	1.24	51.650	1.4	0.869	2.35	A	ER	54.487	1.036	1.88	A	I	32.681	0.80	0.822	1.24	A	I	54.468	
		TNT7A	42.000	--	1.24	52.116	1.4	0.869	2.35	A	ER	54.487	1.036	1.85	A	I	32.681	0.80	0.822	1.24	A	I	54.468	
		TNT7B	42.000	--	1.27	53.207	1.4	0.869	2.4	A	ER	54.487	1.036	1.75	A	I	32.681	0.80	0.822	1.27	A	I	54.468	
		TNAGRIT4	43.000	--	1.22	52.358	1.4	0.869	2.31	A	ER	54.487	1.036	1.7	A	I	32.681	0.80	0.822	1.22	A	I	54.468	
		TNAGT5A	45.000	--	1.15	51.930	1.4	0.869	2.19	A	ER	54.487	1.036	1.68	A	I	32.681	0.80	0.822	1.15	A	I	54.468	
		TNAGT5B	45.000	3	1.15	51.541	1.4	0.869	2.17	A	ER	54.487	1.036	1.62	A	I	32.681	0.80	0.822	1.15	A	I	54.468	

LOAD FACTORS:

DESIGN LOAD RATING FACTORS	LIMIT STATE	γ_{DC}	γ_{DW}
	STRENGTH I	1.25	1.50
	SERVICE III	1.00	1.00

NOTES:

MINIMUM RATING FACTORS ARE BASED ON THE STRENGTH I AND SERVICE III LIMIT STATES.

ALLOWABLE STRESSES FOR SERVICE III LIMIT STATE ARE AS REQUIRED FOR DESIGN.

COMMENTS:

1.
2.
3.
4.

(#) CONTROLLING LOAD RATING

(1) DESIGN LOAD RATING (HL-93)

(2) DESIGN LOAD RATING (HS-20)

(3) LEGAL LOAD RATING **

** SEE CHART FOR VEHICLE TYPE

GIRDER LOCATION

I - INTERIOR GIRDER
EL - EXTERIOR LEFT GIRDER
ER - EXTERIOR RIGHT GIRDER

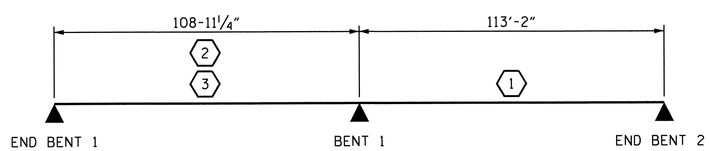

LRFR SUMMARY

PROJECT NO. R-2707B
CLEVELAND COUNTY
STATION: 354+83.22 -L-

STATE OF NORTH CAROLINA
DEPARTMENT OF TRANSPORTATION
RALEIGH

STANDARD
LRFR SUMMARY FOR PRESTRESSED CONCRETE GIRDERS
(NON-INTERSTATE TRAFFIC)

NORTH CAROLINA PROFESSIONAL SEAL 15825 ENGINEER D. KLAPPENBACH
6-27-2013

REVISIONS						SHEET NO.
NO.	BY:	DATE:	NO.	BY:	DATE:	S-232
1			3			TOTAL SHEETS
2			4			266

STD. NO. LRFR1

ASSEMBLED BY : S.T. CHAMPION DATE : JULY 2012
CHECKED BY : B.A. DUKE DATE : DEC. 2012
DRAWN BY : MAA 1/08 REV. 11/12/08R MAA/GM
CHECKED BY : GM/DI 2/08

14-MAY-2013 18:46
R:\Structures\Plans\Bailey\Str7\schampion\Microstation\R2707B_SD_G*_RATING.dgn
bklappenbach

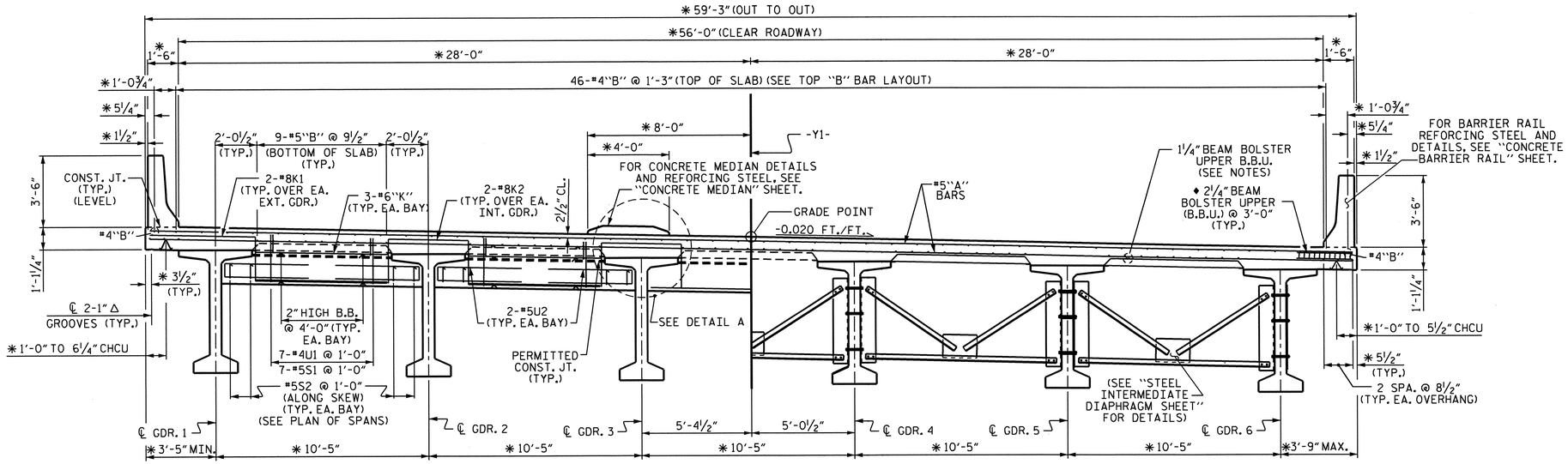

AT END BENT DIAPHRAGM

AT INTERMEDIATE DIAPHRAGM

TYPICAL SECTION

* DIMENSIONS ARE TO CIRCLES CONCENTRIC WITH -Y1-. GIRDERS ARE ON THE CHORDS OF THESE CIRCLES.

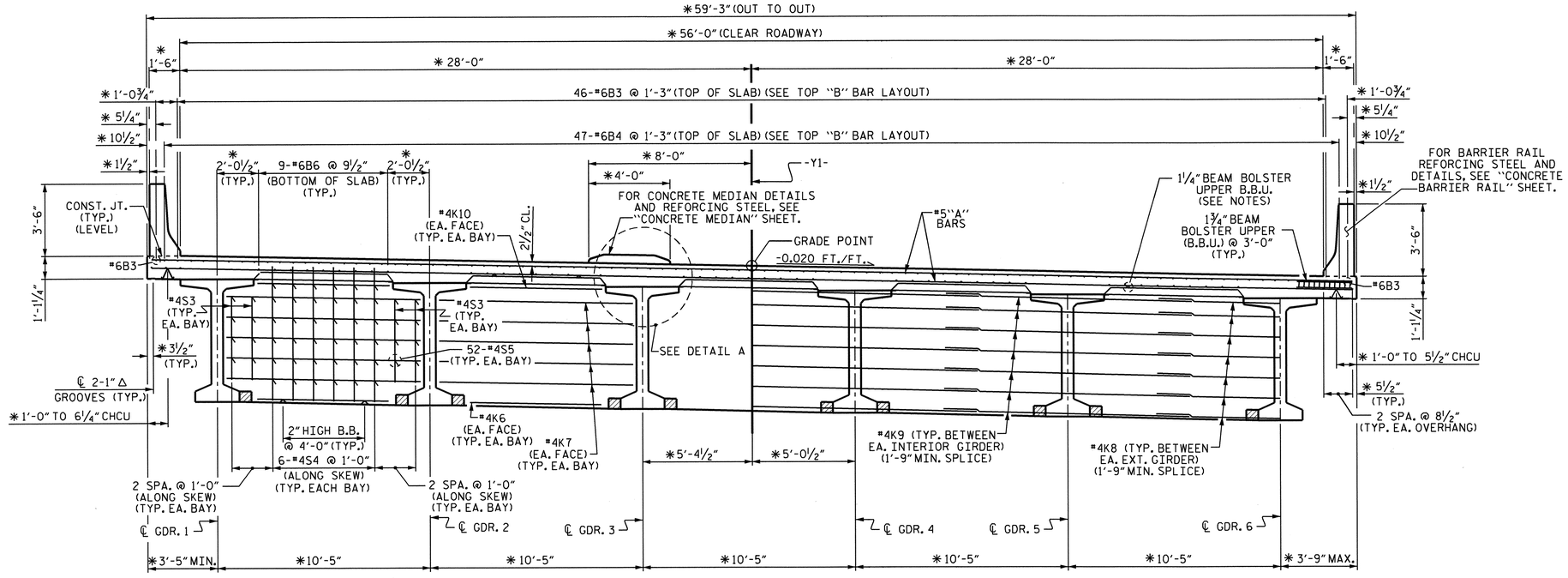

TYPICAL SECTION @ BENT DIAPHRAGM

NOTES

LONGITUDINAL STEEL MAY BE SHIFTED SLIGHTLY, AS NECESSARY, TO AVOID INTERFERENCE WITH STIRRUPS IN PRESTRESSED CONCRETE GIRDERS.

PREVIOUSLY CAST CONCRETE IN A CONTINUOUS UNIT SHALL HAVE ATTAINED A MINIMUM COMPRESSIVE STRENGTH OF 3,000 PSI BEFORE ADDITIONAL CONCRETE IS CAST IN THE UNIT.

PROVIDE 1¼" HIGH BEAM BOLSTERS UPPER AT 4'-0" CTS. ATOP THE METAL STAY-IN-PLACE FORMS TO SUPPORT THE BOTTOM MAT OF 'A' BARS. WHEN USING REMOVABLE FORMS, PROVIDE CONTINUOUS HIGH CHAIRS FOR METAL DECK (C.H.C.M.) @ 4'-0" CTS. WITH A HEIGHT TO SUPPORT THE BOTTOM MAT OF 'A' BARS A CLEAR DISTANCE OF 2½" ABOVE THE TOP OF THE REMOVABLE FORM.

◆ USE THIS SIZE BAR SUPPORT IN THE AREAS WITH THE #4B1 & #4B5 BARS. FOR OTHER AREAS WITH #6"B" BARS, USE THE BAR SUPPORT AS SHOWN IN THE TYPICAL SECTION AT BENT.

BARRIER RAIL IN A CONTINUOUS UNIT SHALL NOT BE CAST UNTIL ALL SLAB CONCRETE IN THE UNIT HAS BEEN CAST AND HAS REACHED A MINIMUM COMPRESSIVE STRENGTH OF 3,000 PSI.

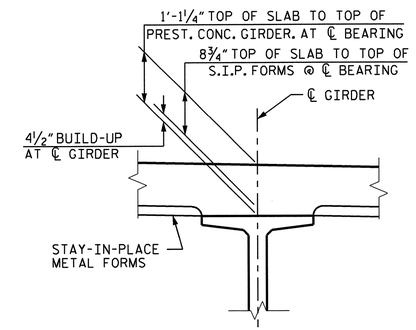

DETAIL A

PROJECT NO. R-2707B

CLEVELAND COUNTY

STATION: 354+83.22-L-

SHEET 1 OF 2

STATE OF NORTH CAROLINA
DEPARTMENT OF TRANSPORTATION
RALEIGH

SUPERSTRUCTURE TYPICAL SECTION DETAILS

NORTH CAROLINA PROFESSIONAL SEAL 15825 ENGINEER DAVID L. KLAPPENBACH 6-21-2013

REVISIONS							SHEET NO.
NO.	BY:	DATE:	NO.	BY:	DATE:		S-233
1			3				TOTAL SHEETS
2			4				266

STR. #7

DESIGN ENGINEER OF RECORD: S. T. CHAMPION DATE: 5-13

DRAWN BY: H. T. BARBOUR DATE: 6-17-12

CHECKED BY: D. A. GLADDEN DATE: 2-13

20-JUN-2013 11:56
K:\Structures\Plans\Bailey\Str7\TBARBOUR\Microstation\R2707B_SD_TS.dgn
tbarbour

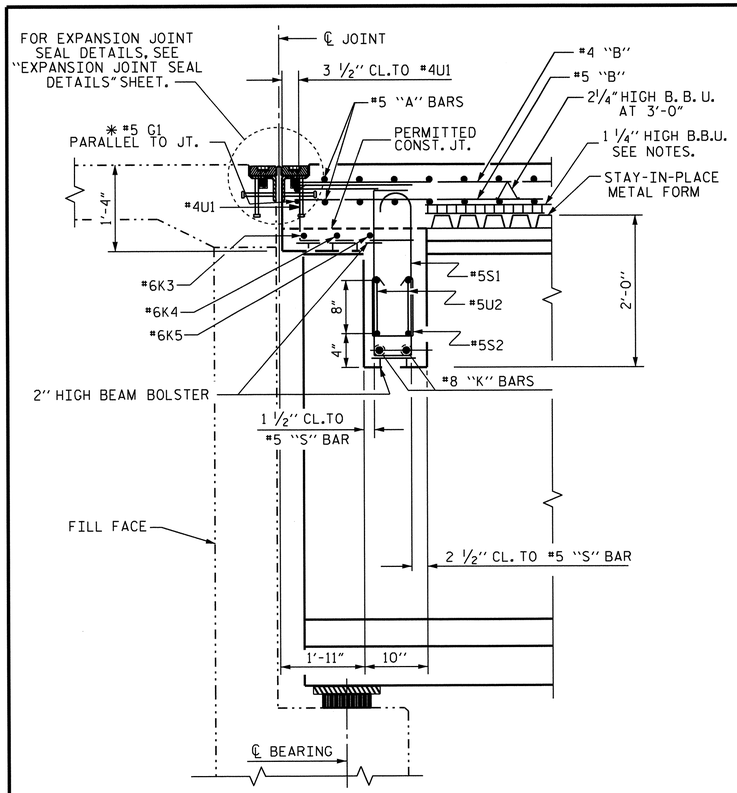

SECTION @ END BENTS

* G1 BAR MAY BE SHIFTED SLIGHTLY, AS NECESSARY, TO CLEAR REINFORCING STEEL AND STIRRUPS

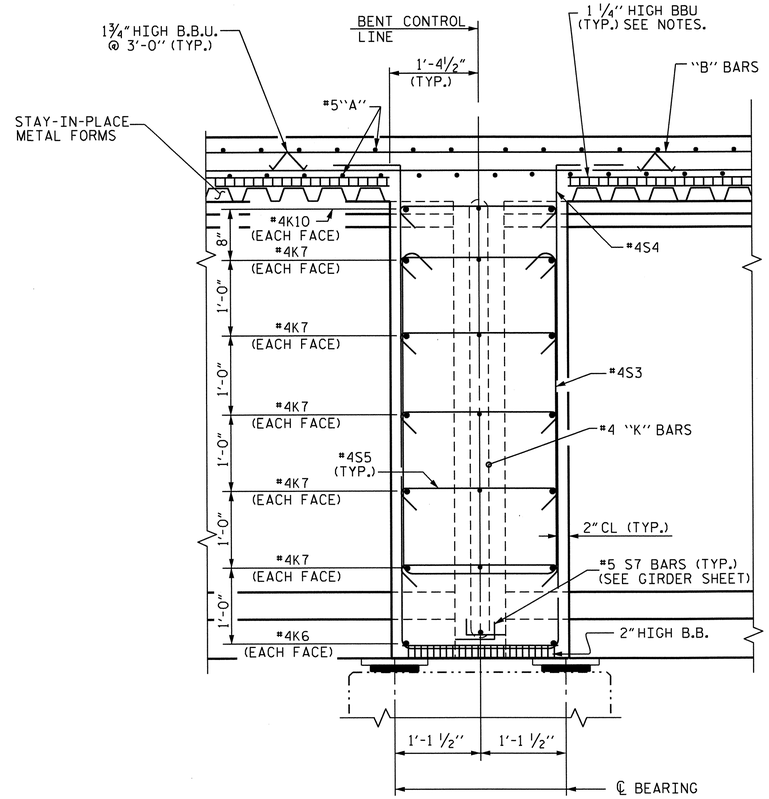

SECTION @ BENT DIAPHRAGM

** MEASURED ALONG ℄ GIRDER

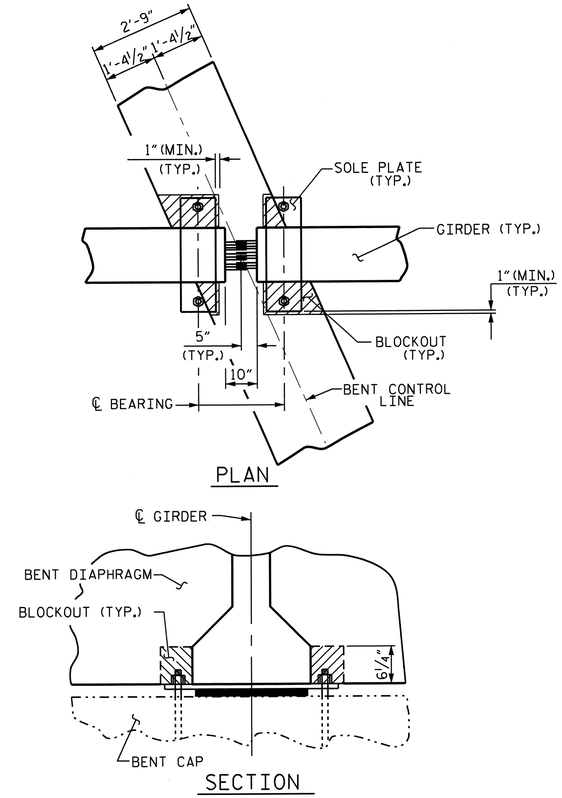

BENT DIAPHRAGM BLOCK-OUT DETAIL

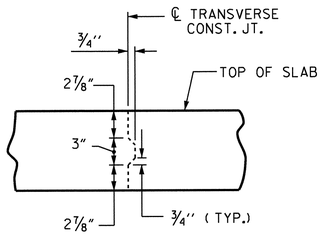

TRANSVERSE CONSTRUCTION JOINT DETAIL

NOTE: REINFORCING STEEL IN SLAB NOT SHOWN. LONGITUDINAL REINFORCING STEEL SHALL BE CONTINUOUS THRU JOINT

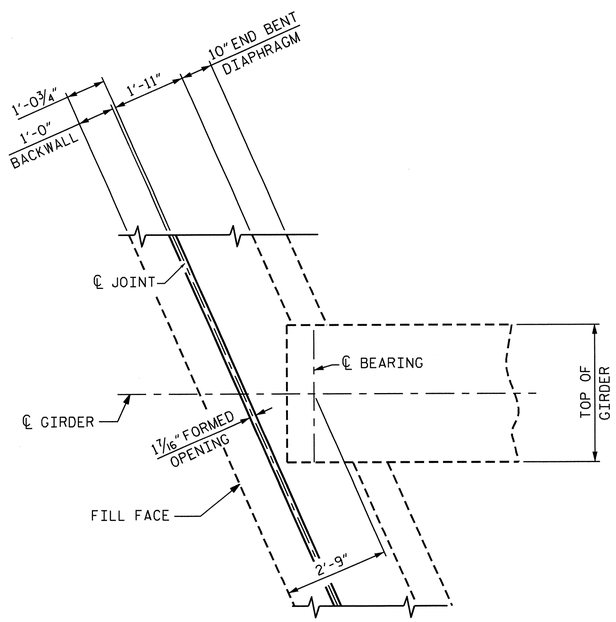

END BENT DIAPHRAGM

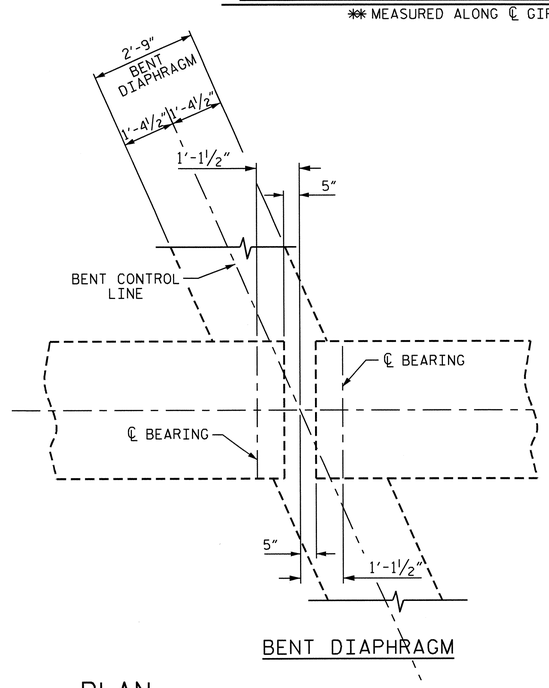

BENT DIAPHRAGM

PLAN

PROJECT NO. R-2707B

CLEVELAND COUNTY

STATION: 354+83.22-L-

SHEET 2 OF 2

STATE OF NORTH CAROLINA
DEPARTMENT OF TRANSPORTATION
RALEIGH

SUPERSTRUCTURE TYPICAL SECTION DETAILS

NORTH CAROLINA PROFESSIONAL SEAL 15826 ENGINEER BRUCE D. KLAPPENBACH
6-27-2013

REVISIONS								SHEET NO. S-234
NO.	BY:	DATE:	NO.	BY:	DATE:			TOTAL SHEETS 266
1			3					
2			4					

DESIGN ENGINEER OF RECORD: S. T. CHAMPION DATE: 5-13
DRAWN BY: H. T. BARBOUR DATE: 6-18-12
CHECKED BY: D. A. GLADDEN DATE: 2-13

27-JUN-2013 09:47
R:\Structures\Plans\Bolley\Str7\TBARBOUR\Microstation\R2707B_SD_TS.dgn
bklappenbach

STR. #7

NOTE

FOR CONCRETE MEDIAN, SEE "CONCRETE MEDIAN" SHEET.

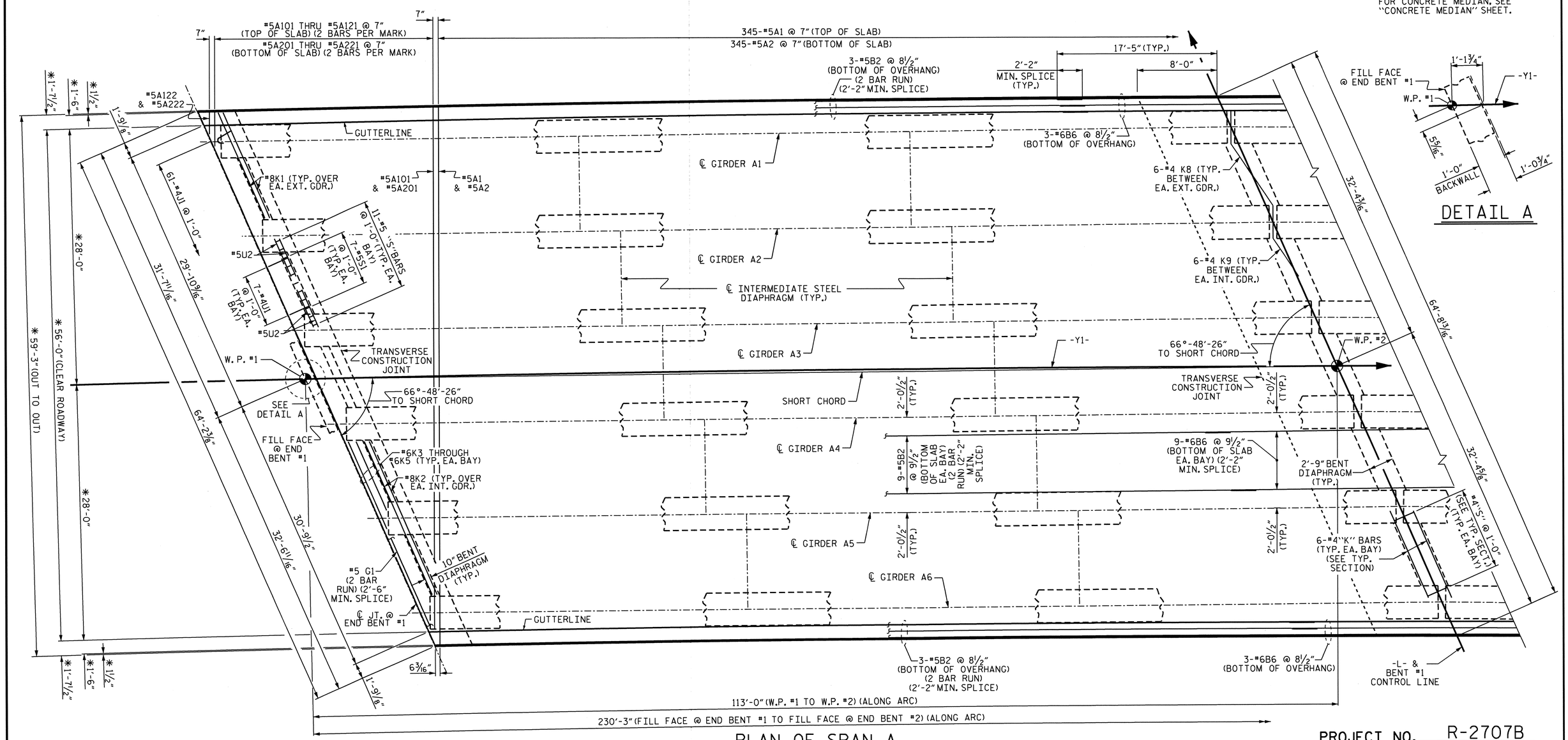

DETAIL A

PLAN OF SPAN A

FOR TOP "B" BARS SEE "B" BAR LAYOUT SHEET.

* DIMENSIONS ARE TO CIRCLES CONCENTRIC WITH ℄ -L-. GIRDERS ARE ON THE CHORDS OF THESE CIRCLES.

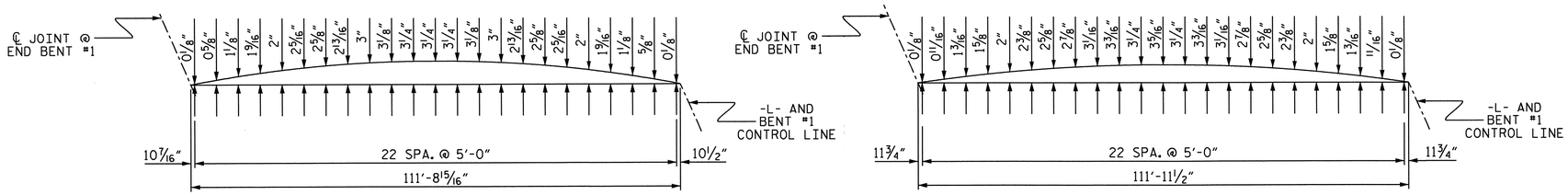

LEFT SIDE

RIGHT SIDE

ARC OFFSETS

PROJECT NO. R-2707B

CLEVELAND COUNTY

STATION: 354+83.22-L-

SHEET 1 OF 2

STATE OF NORTH CAROLINA
DEPARTMENT OF TRANSPORTATION
RALEIGH

SUPERSTRUCTURE PLAN OF SPAN A

NORTH CAROLINA PROFESSIONAL SEAL 15825 ENGINEER PRUDHOE D. KLAPPENBACH
6-27-2013

REVISIONS						SHEET NO. S-235
NO.	BY:	DATE:	NO.	BY:	DATE:	TOTAL SHEETS 266
1			3			
2			4			

STR. #7

DESIGN ENGINEER OF RECORD: S. T. CHAMPION DATE: 5-13

DRAWN BY: H. T. BARBOUR DATE: 6-26-12

CHECKED BY: D. A. GLADDEN DATE: 2-13

20-JUN-2013 11:57
K:\Structures\Plans\Bailey\Str7\TBARBOUR\Microstation\R2707B_SD_TS.dgn
tbarbour

NOTE

FOR CONCRETE MEDIAN, SEE "CONCRETE MEDIAN" SHEET.

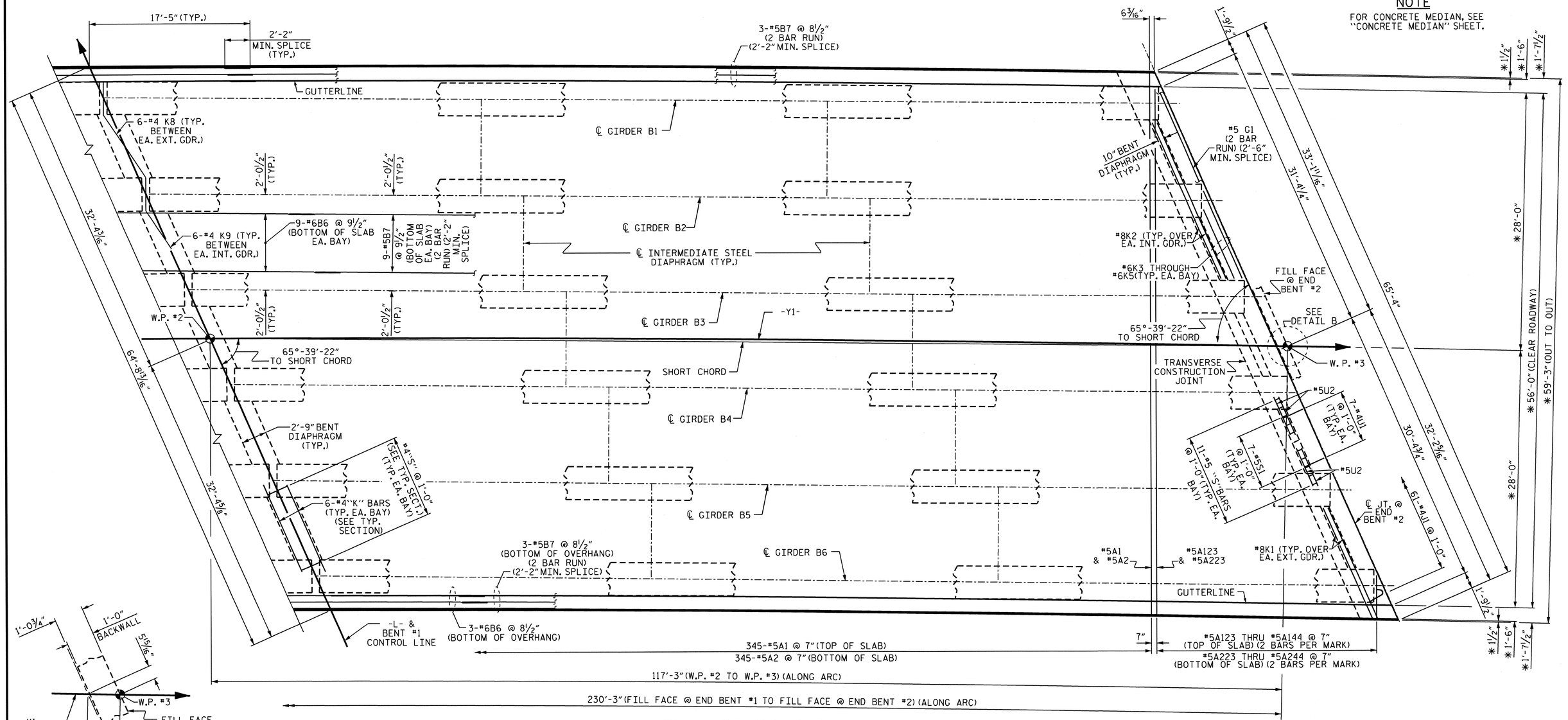

PLAN OF SPAN B

FOR TOP "B" BARS SEE "B" BAR LAYOUT SHEET.

✱ DIMENSIONS ARE TO CIRCLES CONCENTRIC WITH ℄ -Y1-.
GIRDERS ARE ON THE CHORDS OF THESE CIRCLES.

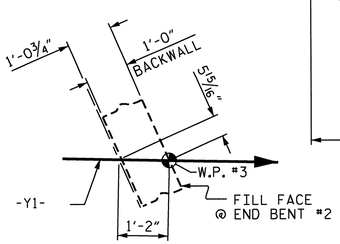

DETAIL B

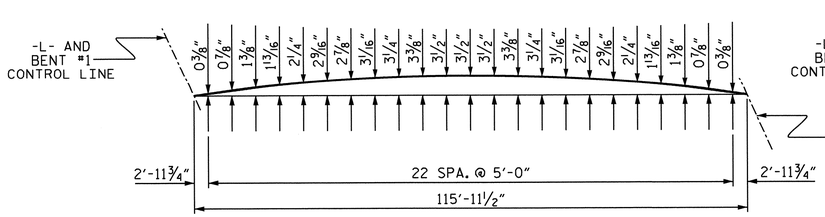

LEFT SIDE

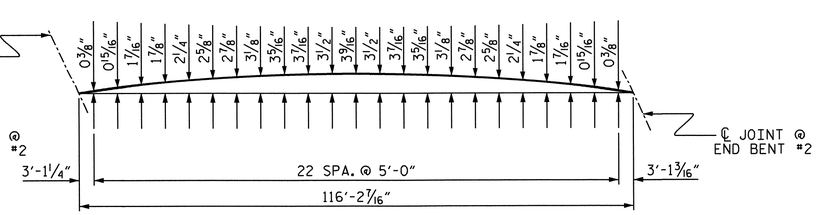

RIGHT SIDE

ARC OFFSETS

PROJECT NO. R-2707B

CLEVELAND COUNTY

STATION: 354+83.22-L-

SHEET 2 OF 2

STATE OF NORTH CAROLINA
DEPARTMENT OF TRANSPORTATION
RALEIGH

SUPERSTRUCTURE PLAN OF SPAN B

NORTH CAROLINA PROFESSIONAL SEAL 15825 ENGINEER BRUCE E. WOMACK D. KL APPENBERG 6-27-2013

REVISIONS						SHEET NO.
NO.	BY:	DATE:	NO.	BY:	DATE:	S-236
1			3			TOTAL SHEETS
2			4			266

STR. #7

DESIGN ENGINEER OF RECORD: S. T. CHAMPION DATE: 5-13

DRAWN BY: H. T. BARBOUR DATE: 6-26-12

CHECKED BY: D. A. GLADDEN DATE: 2-13

14-MAY-2013 12:43
K:\Structures\Plans\Bolley\Str7\TBARBOUR\Microstation\R2707B_SD_TS.dgn
tbarbour

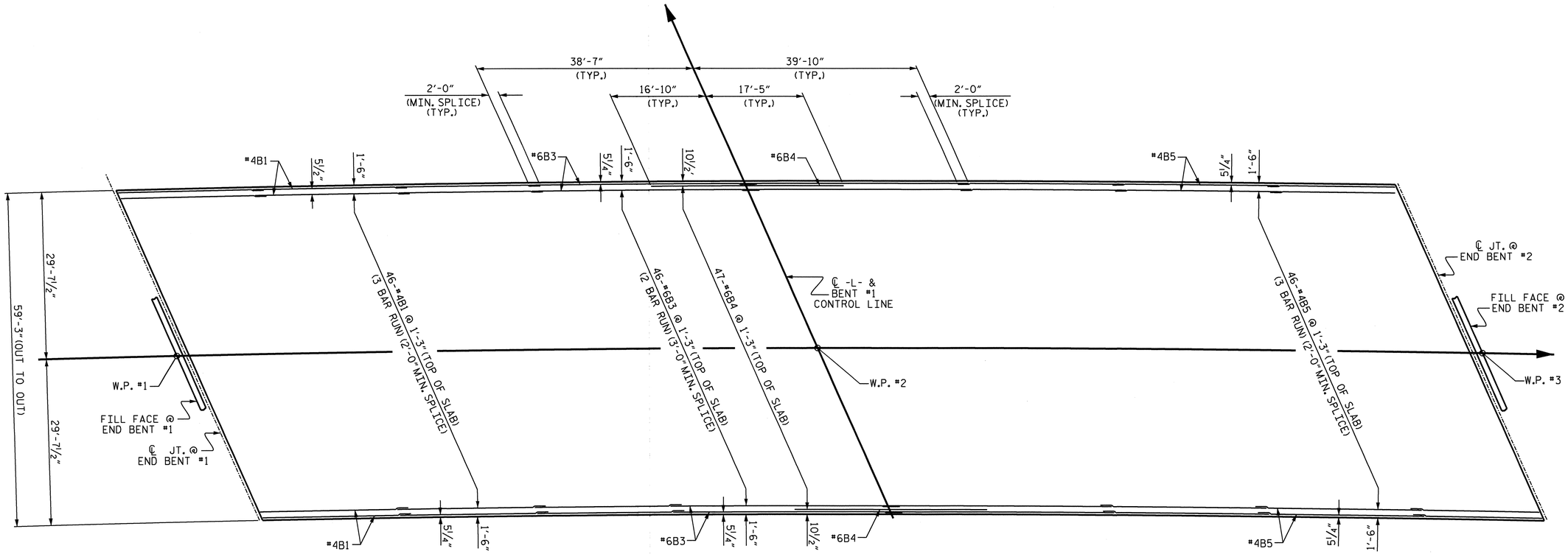

PLAN OF TOP "B" BAR LAYOUT

PROJECT NO. R-2707B

CLEVELAND COUNTY

STATION: 354+83.22-L-

STATE OF NORTH CAROLINA
DEPARTMENT OF TRANSPORTATION
RALEIGH

SUPERSTRUCTURE
TOP "B" BAR
LAYOUT

NORTH CAROLINA PROFESSIONAL SEAL 15875 BRIDGE ENGINEER BRIAN D. KLAPPENBACH
6-27-2013

REVISIONS						SHEET NO.
NO.	BY:	DATE:	NO.	BY:	DATE:	S-237
1			3			TOTAL SHEETS
2			4			266

DESIGN ENGINEER OF RECORD: S. T. CHAMPION DATE : 5-13

DRAWN BY : H. T. BARBOUR DATE : 6-27-12

CHECKED BY : D. A. GLADDEN DATE : 2-13

20-JUN-2013 11:58
K:\Structures\Plans\Bailey\Str7\TBARBOUR\Microstation\R2707B_SD_TS.dgn
tbarbour

STR. #7

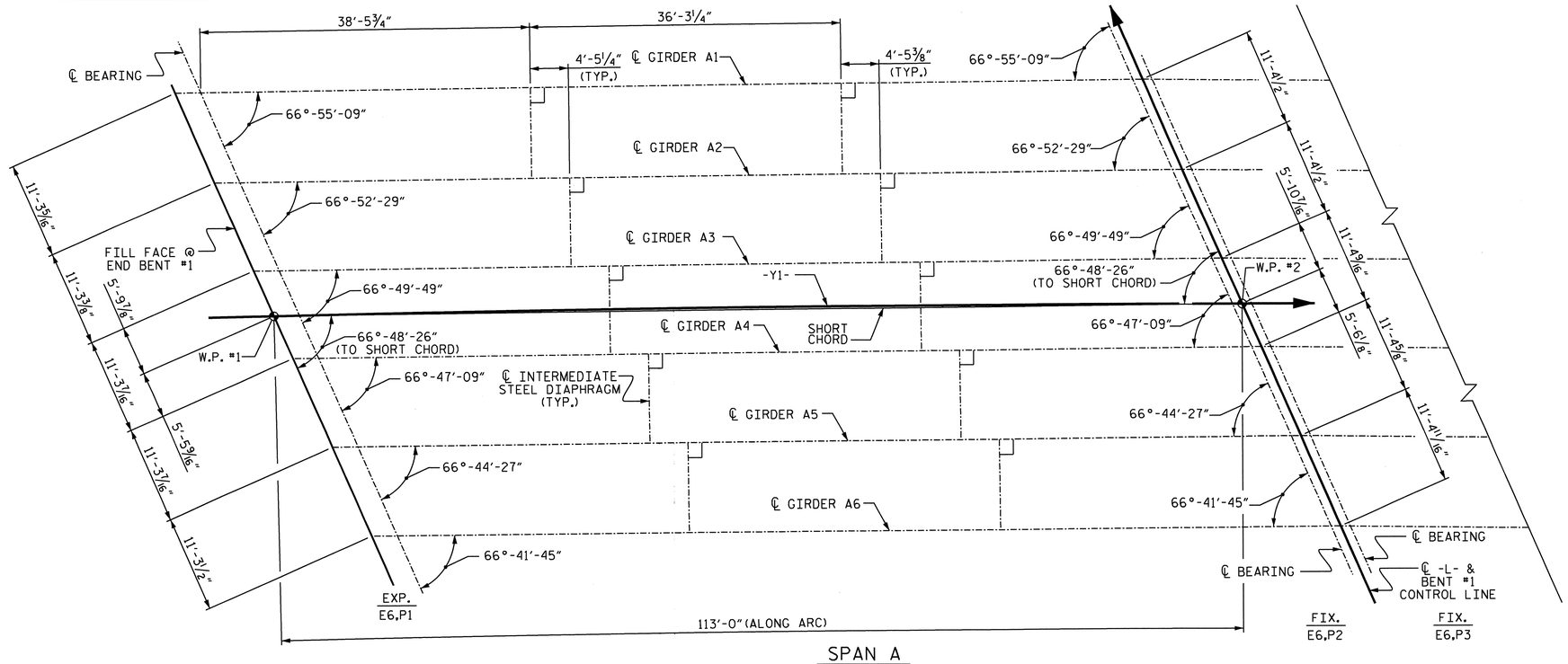

SPAN A

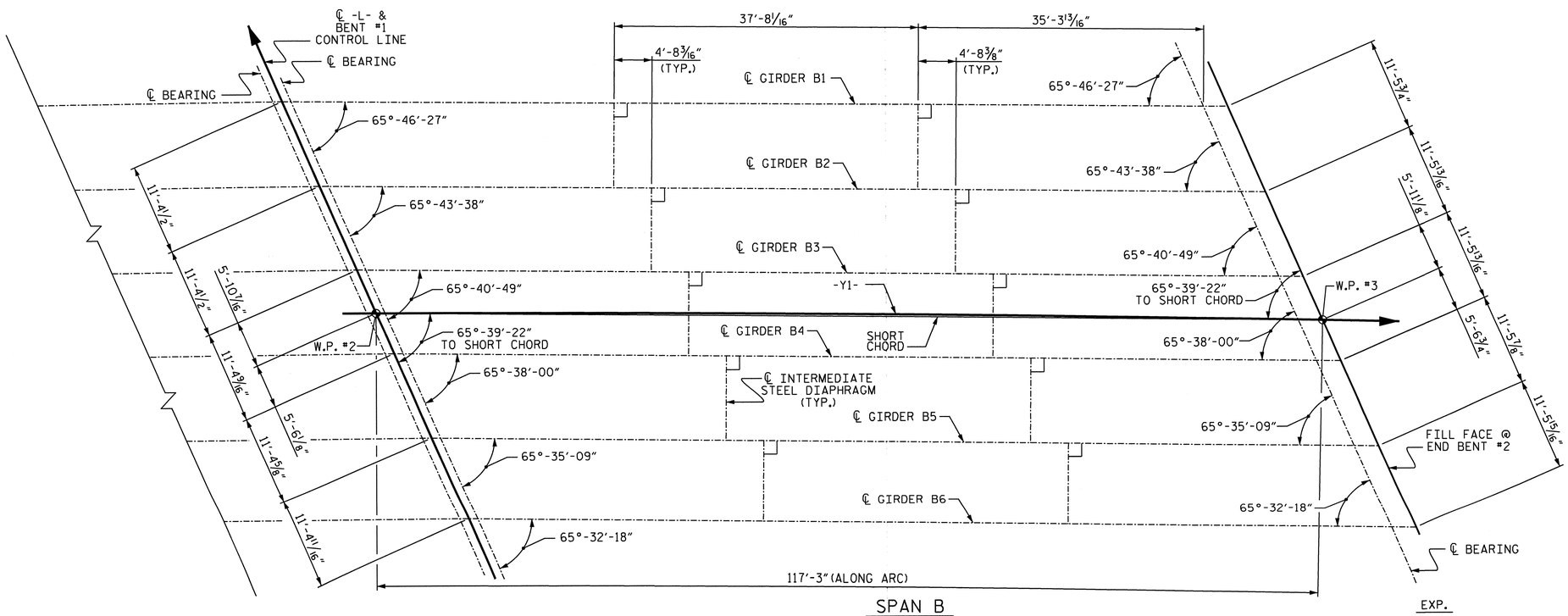

SPAN B

FRAMING PLAN

PROJECT NO. R-2707B
CLEVELAND COUNTY
STATION: 354+83.22-L-

STATE OF NORTH CAROLINA
DEPARTMENT OF TRANSPORTATION
RALEIGH

SUPERSTRUCTURE FRAMING PLAN

NORTH CAROLINA PROFESSIONAL SEAL 15825 ENGINEER BRIAN D. KLAPPENBACH
6-27-2013

REVISIONS						SHEET NO. S-238
NO.	BY:	DATE:	NO.	BY:	DATE:	TOTAL SHEETS 266
1			3			
2			4			

DESIGN ENGINEER OF RECORD: S. T. CHAMPION DATE: 5-13
DRAWN BY: H. T. BARBOUR DATE: 6-27-12
CHECKED BY: D. A. GLADDEN DATE: 2-13

20-JUN-2013 12:00
K:\Structures\Plans\Bailey\Str7\TBARBOUR\Microstation\R2707B_SD_TS.dgn
tbarbour

STR. #7

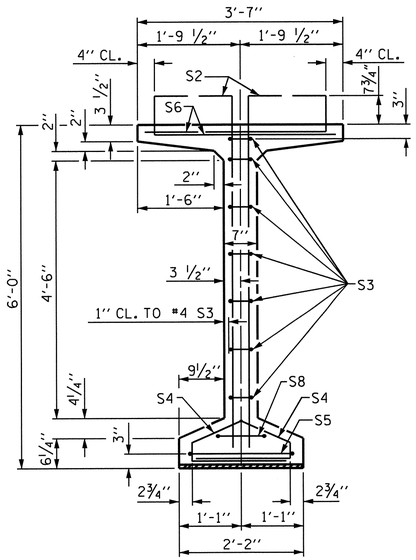

SECTION A-A

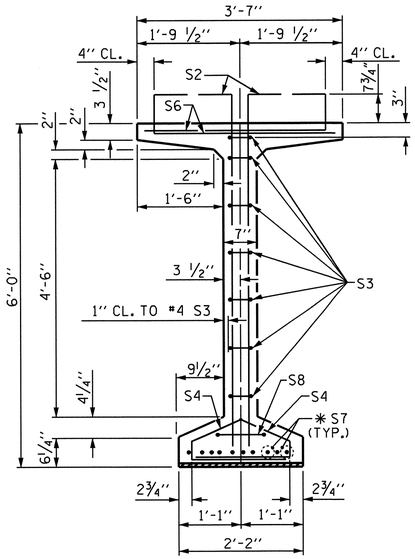

SECTION B-B

*FOR S7 BARS. SEE DETAIL "C" OF PRESTRESSED CONCRETE GIRDER CONTINUOUS FOR LIVE LOAD DETAILS SHEET

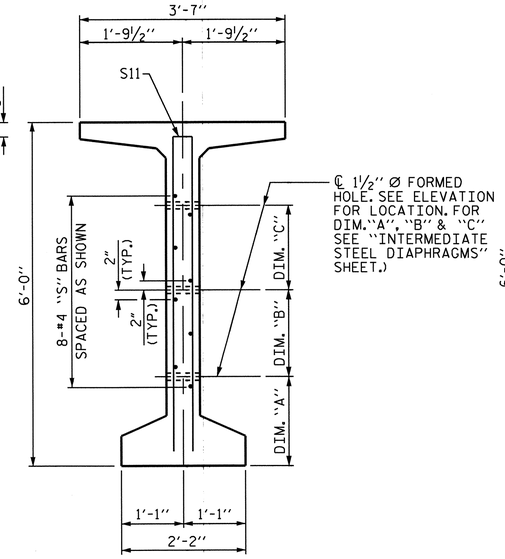

SECTION C-C

(S1, S6 AND S9 BARS NOT SHOWN)

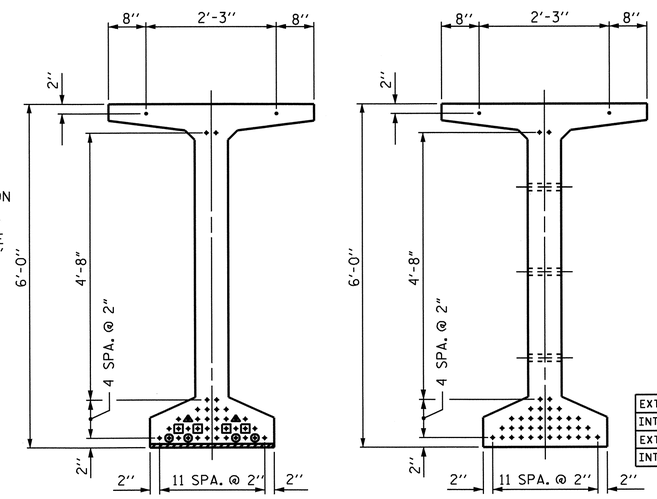

AT END OF GIRDER

AT ℄ OF GIRDER

0.6" Ø LOW RELAXATION STRAND LAYOUT

DEBONDING LEGEND

- ● FULLY BONDED STRANDS
- ◭ STRANDS DEBONDED FOR 8'-0" FROM END OF GIRDER
- ▣ STRANDS DEBONDED FOR 10'-0" FROM END OF GIRDER
- ⊙ STRANDS DEBONDED FOR 12'-0" FROM END OF GIRDER

0.6" Ø L. R. GRADE 270 STRANDS

AREA (SQUARE INCHES)	ULTIMATE STRENGTH (LBS. PER STRAND)	APPLIED PRESTRESS (LBS. PER STRAND)
0.217	58,600	43,950

REINFORCING STEEL FOR ONE GDR

	BAR	NUMBER	SIZE	TYPE	LENGTH	WEIGHT
	S1	172	#4	1	7'-0"	804
	S2	24	#6	1	7'-0"	252
	S3	14	#4	2	8'-5"	79
	S4	84	#4	3	3'-0"	168
	S5	1	#5	2	9'-10"	10
	S6	196	#5	4	4'-6"	920
	* S7	10	#5	STR	3'-8"	38
	S8	2	#5	2	9'-0"	19
	S9	53	#5	STR	3'-3"	180
	S10	1	#3	STR	1'-10"	1
EXTERIOR GDR.	S11	8	#5	2	11'-8"	97
INTERIOR GDR.	S11	16	#5	2	11'-8"	195
EXTERIOR GDR.	S12	16	#4	STR	8'-0"	86
INTERIOR GDR.	S13	16	#4	STR	12'-6"	134

* NOTE: S7 BARS SHALL BE BENT BEFORE SHIPMENT. HEAT BENDING SHALL NOT BE ALLOWED.

BAR TYPES

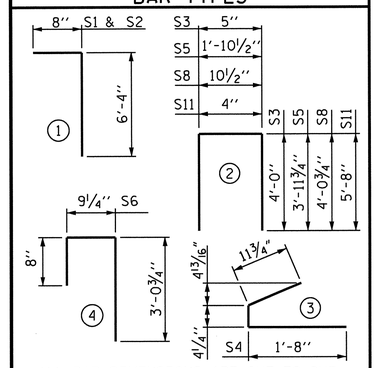

ALL BAR DIMENSIONS ARE OUT-TO-OUT

QUANTITIES FOR ONE GIRDER

SPAN A	REINFORCING STEEL LB.	8,500 PSI CONCRETE C.Y.	0.60" Ø L.R. STRANDS No.
GIRDER 1	2654	23.6	40
GIRDER 2	2800	23.6	40
GIRDER 3	2800	23.6	40
GIRDER 4	2800	23.6	40
GIRDER 5	2280 2800	23.6	40
GIRDER 6	2654	23.7	40

GIRDERS REQUIRED

SPAN A	NUMBER	LENGTH
GIRDER 1	1	110'-2 1/2"
GIRDER 2	1	110'-2 7/8"
GIRDER 3	1	110'-3 3/8"
GIRDER 4	1	110'-3 3/4"
GIRDER 5	1	110'-4 1/4"
GIRDER 6	1	110'-4 5/8"
TOTAL LENGTH		661'-9 3/8"

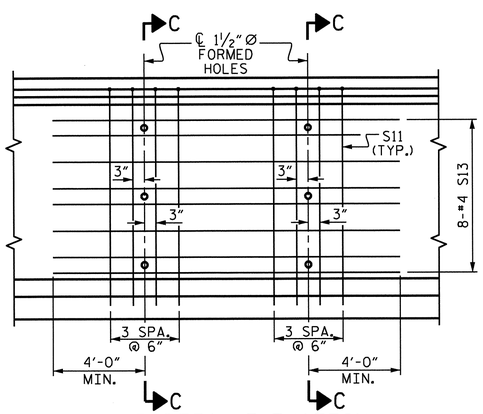

PARTIAL ELEVATION

SHOWING INTERMEDIATE STEEL DIAPHRAGM REINFORCING STEEL FOR GIRDER Nos. 2 THRU 5

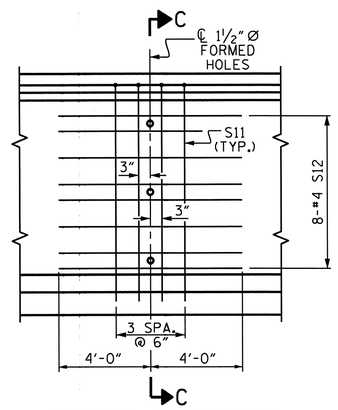

PARTIAL ELEVATION

SHOWING INTERMEDIATE STEEL DIAPHRAGM REINFORCING STEEL FOR GIRDER Nos. 1 & 6

PROJECT NO. R-2707B

CLEVELAND COUNTY

STATION: 354+83.22-L-

SHEET 1 OF 6

STATE OF NORTH CAROLINA
DEPARTMENT OF TRANSPORTATION
RALEIGH

72" PRESTRESSED CONCRETE MODIFIED BULB TEE CONTINUOUS FOR LIVE LOAD (SPAN A)

NORTH CAROLINA PROFESSIONAL SEAL 15825 ENGINEER D. KL. APPERSON BRIDGE ENGINEER 6-27-2013

DESIGN ENGINEER OF RECORD: S. T. CHAMPION	DATE : 5-13
ASSEMBLED BY : H. T. BARBOUR	DATE : 7-06-12
CHECKED BY : D. A. GLADDEN	DATE : 2-13
DRAWN BY : EEM 2/6/97	REV. 10/17/00 RWW/LES
CHECKED BY : VAP 2/6/97	REV. 5/1/06R TLA/GM
	REV. 10/1/11 MAA/GM

REVISIONS						SHEET NO.
NO.	BY:	DATE:	NO.	BY:	DATE:	S-239
1			3			TOTAL SHEETS
2			4			266

STR. #7

STD. NO. PCG8 (Sht. 1)

20-JUN-2013 12:01
K:\Structures\Plans\Bailey\Str7\TBARBOUR\Microstation\R2707B_SD_T5.dgn
tbarbour

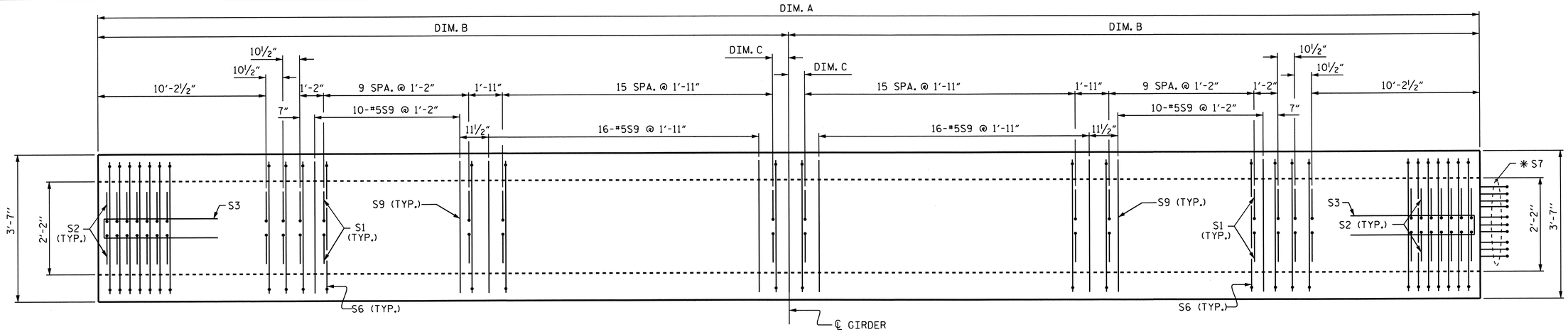

PLAN OF GIRDER

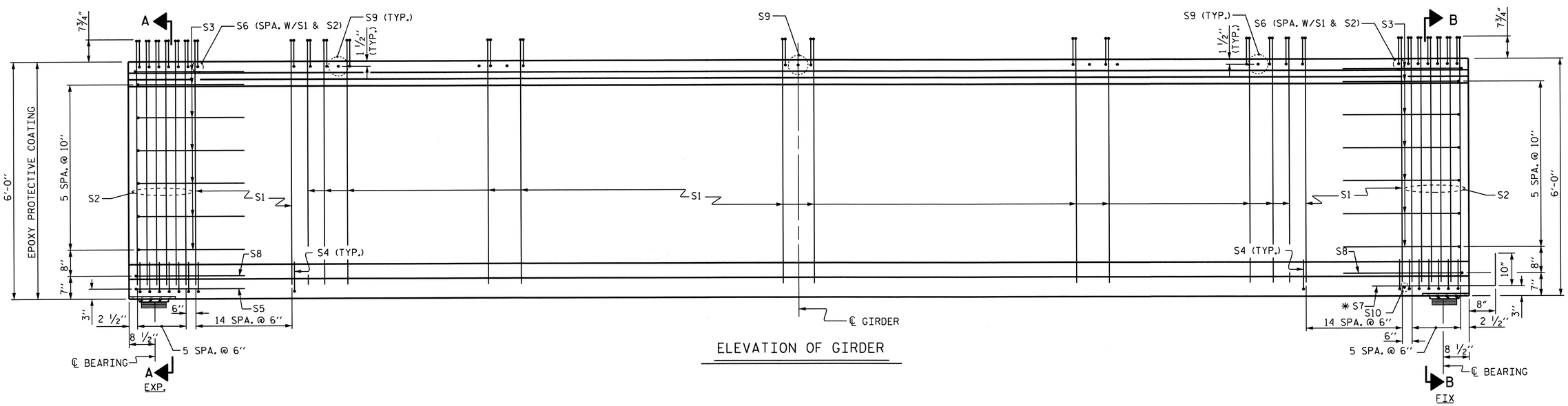

ELEVATION OF GIRDER

GIRDER DIMENSIONS

GIRDER No.	DIMENSION A	DIMENSION B	DIMENSION C
GIRDER 1	110'-2½"	55'-1¼"	9¾"
GIRDER 2	110'-2⅞"	55'-1 7/16"	9 15/16"
GIRDER 3	110'-3⅜"	55'-1 11/16"	10 3/16"
GIRDER 4	110'-3¾"	55'-1⅞"	10⅜"
GIRDER 5	110'-4¼"	55'-2⅛"	10⅝"
GIRDER 6	110'-4⅝"	55'-2 5/16"	10 13/16"

PROJECT NO. R-2707B
CLEVELAND COUNTY
STATION: 354+83.22-L-

SHEET 2 OF 6

STATE OF NORTH CAROLINA
DEPARTMENT OF TRANSPORTATION
RALEIGH

72" PRESTRESSED CONCRETE MODIFIED BULB TEE CONTINUOUS FOR LIVE LOAD (SPAN A)

NORTH CAROLINA PROFESSIONAL SEAL 15828 ENGINEER BRUCE D. KLAPPENBACH
6-27-2013

REVISIONS						SHEET NO.
NO.	BY:	DATE:	NO.	BY:	DATE:	S-240
1			3			TOTAL SHEETS 266
2			4			

STR. #7

DESIGN ENGINEER OF RECORD: S. T. CHAMPION DATE: 5-13
DRAWN BY: H. T. BARBOUR DATE: 7-06-12
CHECKED BY: D. A. GLADDEN DATE: 2-13

14-MAY-2013 12:42
K:\Structures\Plans\Bailey\Str7\TBARBOUR\Microstation\R2707B_SD_TS.dgn
tbarbour

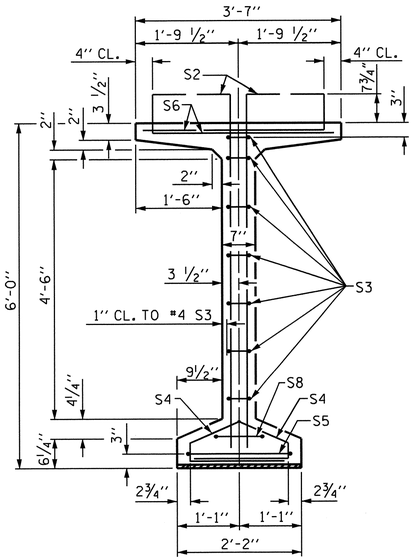

SECTION A-A

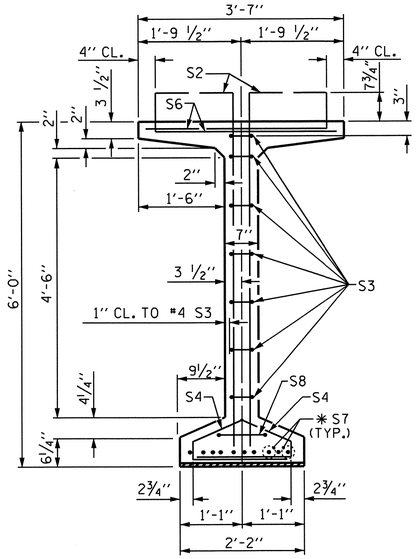

SECTION B-B

*FOR S7 BARS. SEE DETAIL "C" OF PRESTRESSED CONCRETE GIRDER CONTINUOUS FOR LIVE LOAD DETAILS SHEET

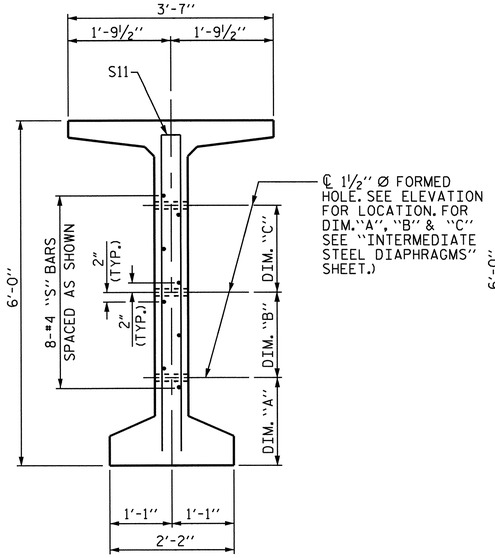

SECTION C-C

(S1, S6 AND S9 BARS NOT SHOWN)

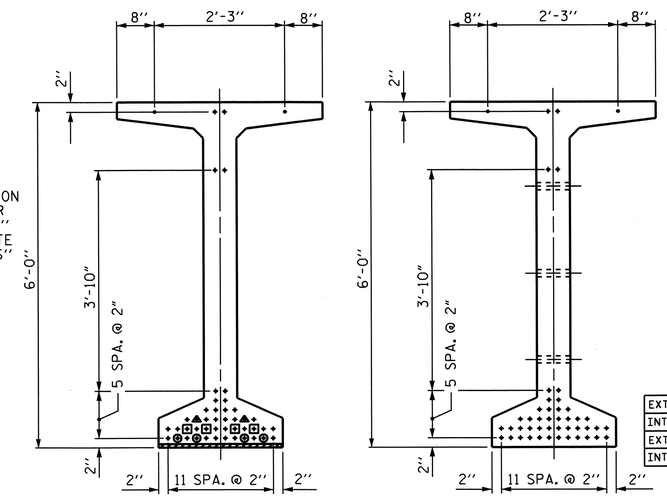

AT END OF GIRDER

AT ℄ OF GIRDER

0.6" Ø LOW RELAXATION STRAND LAYOUT

0.6" Ø L. R. GRADE 270 STRANDS

AREA (SQUARE INCHES)	ULTIMATE STRENGTH (LBS. PER STRAND)	APPLIED PRESTRESS (LBS. PER STRAND)
0.217	58,600	43,950

REINFORCING STEEL FOR ONE GDR

BAR	NUMBER	SIZE	TYPE	LENGTH	WEIGHT
S1	192	#4	1	7'-0"	898
S2	24	#6	1	7'-0"	252
S3	14	#4	2	8'-5"	79
S4	84	#4	3	3'-0"	168
S5	1	#5	2	9'-10"	10
S6	216	#5	4	4'-6"	1014
* S7	10	#5	STR	3'-8"	38
S8	2	#5	2	9'-0"	19
S9	35	#5	STR	3'-3"	119
S10	1	#3	STR	1'-10"	1
S11 (EXTERIOR GDR.)	8	#5	2	11'-8"	97
S11 (INTERIOR GDR.)	16	#5	2	11'-8"	195
S12 (EXTERIOR GDR.)	16	#4	STR	8'-0"	86
S13 (INTERIOR GDR.)	16	#4	STR	12'-9"	136

* NOTE: S7 BARS SHALL BE BENT BEFORE SHIPMENT. HEAT BENDING SHALL NOT BE ALLOWED.

BAR TYPES

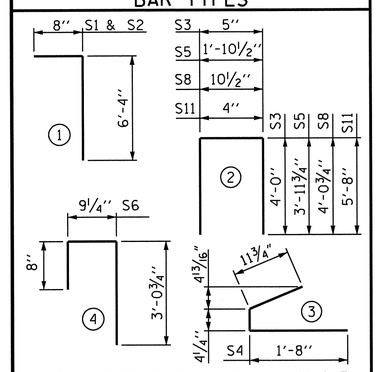

ALL BAR DIMENSIONS ARE OUT-TO-OUT

DEBONDING LEGEND

- ● FULLY BONDED STRANDS
- ◭ STRANDS DEBONDED FOR 12'-0" FROM END OF GIRDER
- ⊡ STRANDS DEBONDED FOR 14'-0" FROM END OF GIRDER
- ⊙ STRANDS DEBONDED FOR 16'-0" FROM END OF GIRDER

QUANTITIES FOR ONE GIRDER

	REINFORCING STEEL	9,000 PSI CONCRETE	0.60" Ø L.R. STRANDS
SPAN B	LB.	C.Y.	No.
GIRDER 1	2781	24.5	46
GIRDER 2	2929	24.5	46
GIRDER 3	2929	24.5	46
GIRDER 4	2929	24.5	46
GIRDER 5	2929	24.6	46
GIRDER 6	2781	24.6	46

GIRDERS REQUIRED

SPAN B	NUMBER	LENGTH
GIRDER 1	1	114'-5"
GIRDER 2	1	114'-5 1/2"
GIRDER 3	1	114'-6"
GIRDER 4	1	114'-6 1/2"
GIRDER 5	1	114'-7"
GIRDER 6	1	114'-7 1/2"
TOTAL LENGTH		687'-1 1/2"

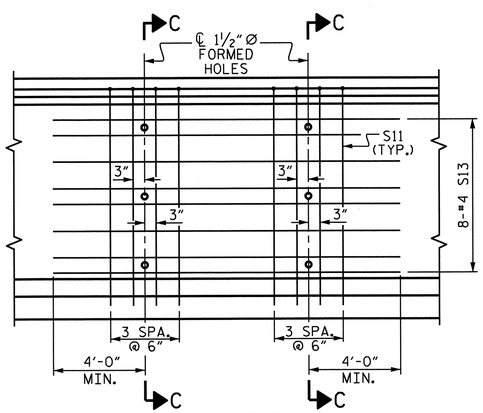

PARTIAL ELEVATION

SHOWING INTERMEDIATE STEEL DIAPHRAGM REINFORCING STEEL FOR GIRDER Nos. 2 THRU 5

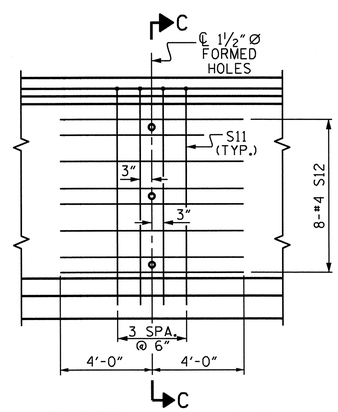

PARTIAL ELEVATION

SHOWING INTERMEDIATE STEEL DIAPHRAGM REINFORCING STEEL FOR GIRDER Nos. 1 & 6

PROJECT NO. R-2707B

CLEVELAND COUNTY

STATION: 354+83.22-L-

SHEET 3 OF 6

STATE OF NORTH CAROLINA
DEPARTMENT OF TRANSPORTATION
RALEIGH

72" PRESTRESSED CONCRETE MODIFIED BULB TEE CONTINUOUS FOR LIVE LOAD (SPAN B)

NORTH CAROLINA PROFESSIONAL SEAL 15825 ENGINEER BRYCE D. KLAPPENBACH 6-27-2013

DESIGN ENGINEER OF RECORD: S. T. CHAMPION	DATE : 5-13	
ASSEMBLED BY : H. T. BARBOUR	DATE : 7-09-12	
CHECKED BY : D. A. GLADDEN	DATE : 2-13	
DRAWN BY : EEM 2/6/97	REV. 10/17/00	RWW/LES
CHECKED BY : VAP 2/6/97	REV. 5/1/06R	TLA/GM
	REV. 10/1/11	MAA/GM

REVISIONS							SHEET NO.
NO.	BY:	DATE:	NO.	BY:	DATE:		S-241
1			3				TOTAL SHEETS 266
2			4				

STR. #7

STD. NO. PCG8 (Sht. 1)

14-MAY-2013 12:42
K:\Structures\Plans\Bailey\Str7\TBARBOUR\Microstation\R2707B_SD_TS.dgn
tbarbour

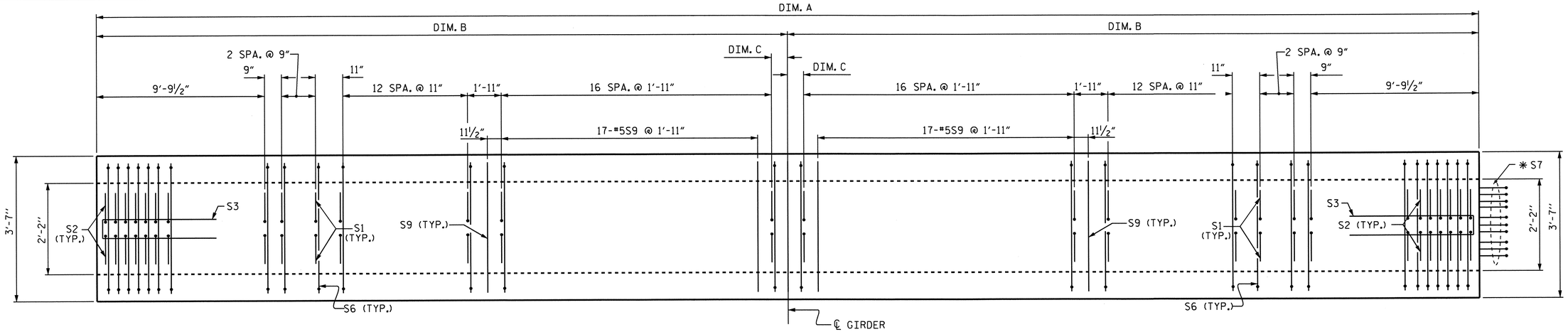

PLAN OF GIRDER

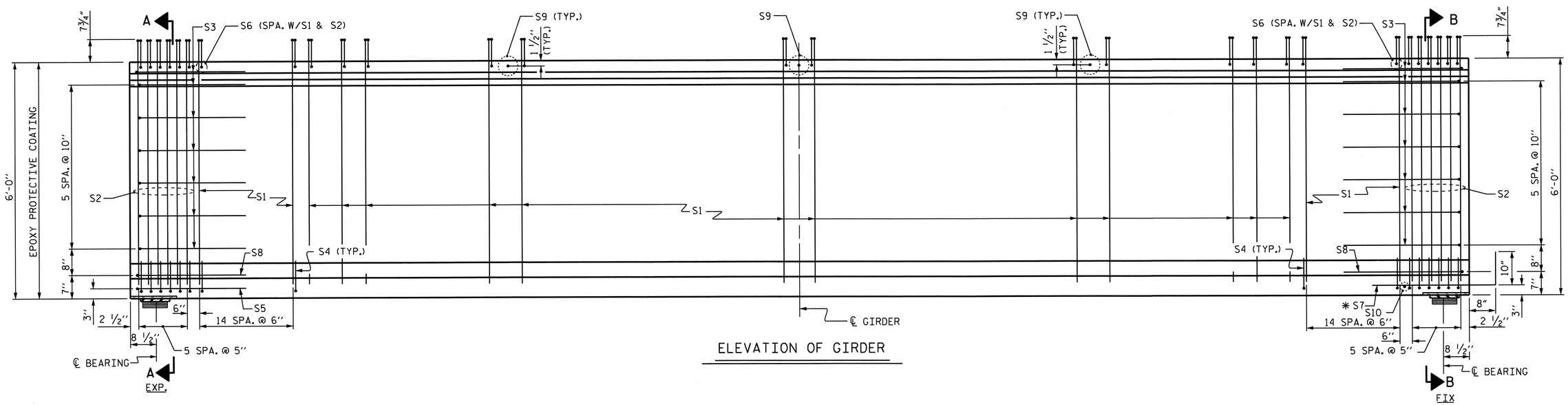

ELEVATION OF GIRDER

GIRDER DIMENSIONS

GIRDER No.	DIMENSION A	DIMENSION B	DIMENSION C
GIRDER 1	114'-5"	57'-2½"	8"
GIRDER 2	114'-5½"	57'-2¾"	8¼"
GIRDER 3	114'-6"	57'-3"	8½"
GIRDER 4	114'-6½"	57'-3¼"	8¾"
GIRDER 5	114'-7"	57'-3½"	9"
GIRDER 6	114'-7½"	57'-3¾"	9¼"

PROJECT NO. R-2707B
CLEVELAND COUNTY
STATION: 354+83.22-L-

SHEET 4 OF 6

STATE OF NORTH CAROLINA
DEPARTMENT OF TRANSPORTATION
RALEIGH

72" PRESTRESSED CONCRETE MODIFIED BULB TEE CONTINUOUS FOR LIVE LOAD (SPAN B)

NORTH CAROLINA PROFESSIONAL SEAL 15825 ENGINEER BRUCE D. KLAPPENBACH
6-27-2013

REVISIONS						SHEET NO.
NO.	BY:	DATE:	NO.	BY:	DATE:	S-242
1			3			TOTAL SHEETS
2			4			266

STR. #7

DESIGN ENGINEER OF RECORD: S. T. CHAMPION DATE: 5-13
DRAWN BY: H. T. BARBOUR DATE: 7-09-12
CHECKED BY: D. A. GLADDEN DATE: 2-13

14-MAY-2013 12:41
K:\Structures\Plans\Bailey\Str7\TBARBOUR\Microstation\R2707B_SD_TS.dgn
tbarbour

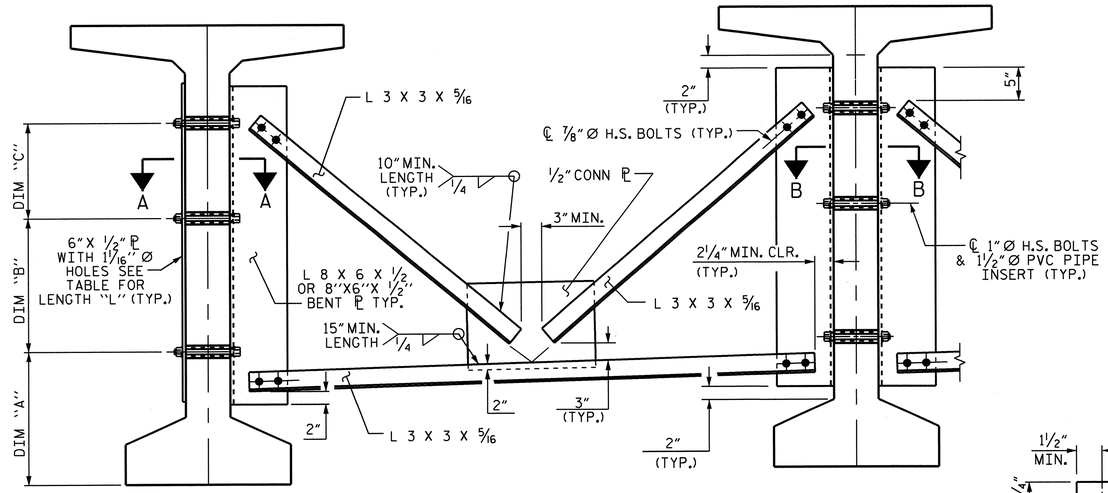

EXTERIOR GIRDER

INTERIOR GIRDER

PART SECTION AT INTERMEDIATE DIAPHRAGM

(72" BULB TEE GIRDER SHOWN)

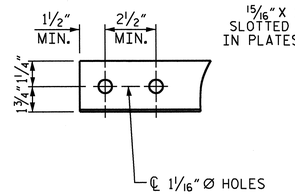

ANGLE END

(L 3 X 3 X 5/16)

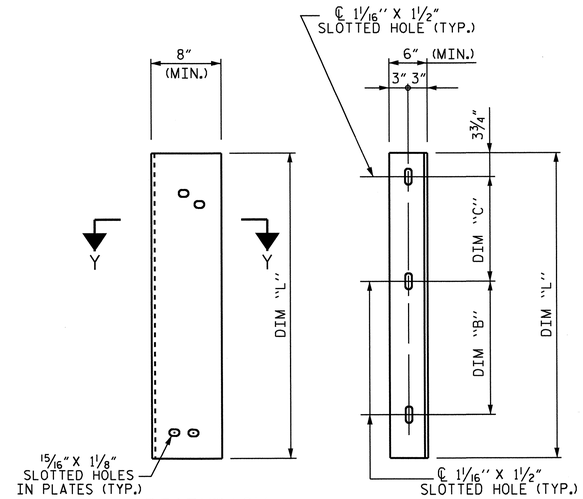

DIAPHRAGM FACE

WEB FACE

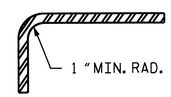

SECTION Y-Y

CONNECTOR PLATE DETAIL

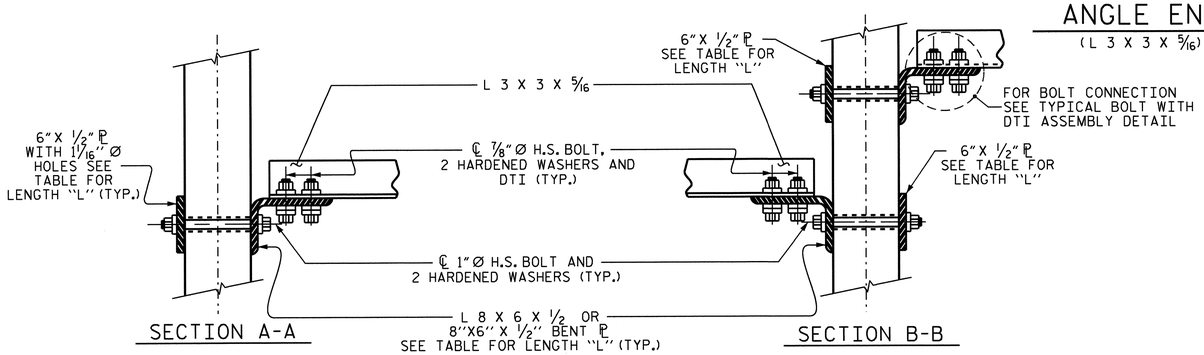

SECTION A-A

SECTION B-B

CONNECTION DETAILS

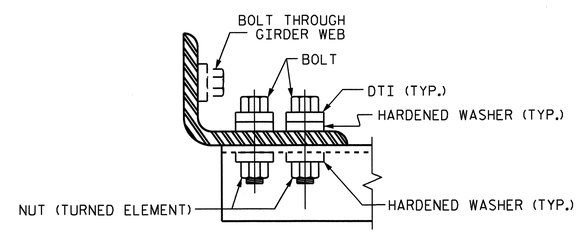

BOLT WITH DTI ASSEMBLY DETAIL

TABLE

GIRDER TYPE	DIM "A"	DIM "B"	DIM "C"	DIM "L"
72" BULB TEE	1'-4"	1'-7"	1'-7"	4'-2"

STRUCTURAL STEEL NOTES

ALL INTERMEDIATE DIAPHRAGM STEEL AND CONNECTOR PLATES SHALL BE AASHTO M270 GRADE 50 OR APPROVED EQUAL.

TENSION ON THE ASTM A325 BOLTS THROUGH THE ANGLE MEMBER SHALL BE CALIBRATED USING DIRECT TENSION INDICATOR WASHERS IN ACCORDANCE WITH THE STANDARD SPECIFICATIONS.

TENSION ON THE ASTM A449 BOLTS THROUGH THE GIRDER WEB SHALL BE SNUG TIGHTENED FOLLOWED BY AN ADDITIONAL 1/4 TURN.

THE PLATES, BENT PLATES, AND ANGLES SHALL BE GALVANIZED OR METALLIZED IN ACCORDANCE WITH THE STANDARD SPECIFICATIONS. FOR THERMAL SPRAYED COATINGS (METALLIZATION), SEE SPECIAL PROVISIONS.

FOR METALLIZATION, APPLY AN 8 MIL THICK 99.99 PERCENT ZINC (W-Zn-1) THERMAL SPRAYED COATING WITH A 0.5 MIL THICK SEAL COAT TO ALL STEEL DIAPHRAGM SURFACES IN ACCORDANCE WITH THE THERMAL SPRAYED COATINGS SPECIAL PROVISION AND SECTION 442 OF THE STANDARD SPECIFICATIONS.

GALVANIZE THE HIGH STRENGTH BOLTS, NUTS, WASHERS AND DIRECT TENSION INDICATORS IN ACCORDANCE WITH THE STANDARD SPECIFICATIONS.

USE AN ASTM F436 HARDENED WASHER WITH STANDARD AND SLOTTED HOLES UNDER EACH BOLT HEAD AND NUT.

FOR BOLTS THROUGH THE GIRDER WEB, PROVIDE SUFFICIENT LENGTH OF THREADS ON ALL BOLTS TO ACCOMMODATE WASHERS AND THE THICKNESS OF CONNECTING MEMBER PLUS AT LEAST 1/4" PROJECTION BEYOND THE NUT.

INTERMEDIATE DIAPHRAGM ASSEMBLY SHALL COMPLY WITH SECTION 1072 OF THE STANDARD SPECIFICATIONS.

SUBMIT TWO SETS OF WORKING DRAWINGS FOR THE INTERMEDIATE DIAPHRAGM ASSEMBLY FOR REVIEW, COMMENTS AND ACCEPTANCE. AFTER REVIEW, COMMENTS, AND ACCEPTANCE, SUBMIT SEVEN SETS FOR DISTRIBUTION.

IN THE EXTERIOR BAYS, PLACE TEMPORARY STRUTS BETWEEN PRESTRESSED GIRDERS ADJACENT TO THE STEEL DIAPHRAGMS. STRUTS SHALL REMAIN IN PLACE 3 DAYS AFTER CONCRETE IS PLACED.

THE COST OF THE STEEL DIAPHRAGMS AND ASSEMBLIES SHALL BE INCLUDED IN THE UNIT PRICE BID FOR PRESTRESSED CONCRETE GIRDERS.

PROJECT NO. R-2707B
CLEVELAND COUNTY
STATION: 354+83.22-L-

SHEET 5 OF 6

STATE OF NORTH CAROLINA
DEPARTMENT OF TRANSPORTATION
RALEIGH

STANDARD
INTERMEDIATE
STEEL DIAPHRAGMS
FOR 63" & 72"
MODIFIED BULB TEE
PRESTRESSED CONCRETE
GIRDERS

REVISIONS						SHEET NO. S-243
NO.	BY:	DATE:	NO.	BY:	DATE:	TOTAL SHEETS 266
1			3			
2			4			

NORTH CAROLINA PROFESSIONAL SEAL 15825 ENGINEER BRYAN E. SCHMIDT D. KLAPPERICH
6-27-2013

DESIGN ENGINEER OF RECORD: S. T. CHAMPION DATE : 5-13	
ASSEMBLED BY : H. T. BARBOUR DATE : 6-28-12 CHECKED BY : D. A. GLADDEN DATE : 2-13	
DRAWN BY : RWW 11/09 CHECKED BY : GM 11/09	ADDED 11/23/09R REV. 10/1/11 MAA/GM

14-MAY-2013 12:40
K:\Structures\Plans\Bailey\Str7\TBARBOUR\Microstation\R2707B_SD_TS.dgn
tbarbour

STR. #7 STD. NO. PCG11 (SHT 1)

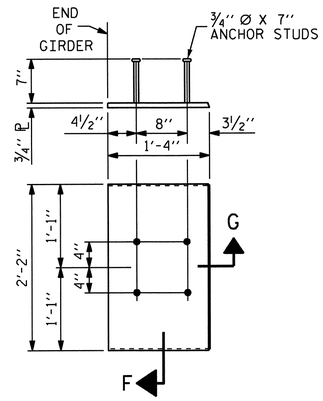

EMBEDDED PLATE "B-1" DETAILS FOR AASHTO TYPE IV GIRDER AND 72" MODIFIED BULB TEES

(2 REQ'D PER GIRDER)

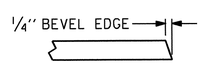

SECTION "G"

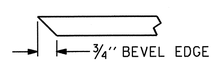

SECTION "F"

(SEE NOTES)

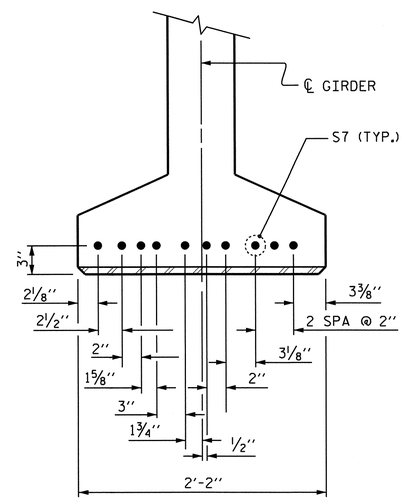

DETAIL "C"

(FOR 72" MODIFIED BULB TEES)

NOTES

ALL PRESTRESSING STRANDS SHALL BE 7-WIRE LOW-RELAXATION GRADE 270 STRANDS AND SHALL CONFORM TO AASHTO M203 EXCEPT FOR SAMPLING REQUIREMENTS WHICH SHALL BE IN ACCORDANCE WITH THE STANDARD SPECIFICATIONS.

ALL REINFORCING STEEL SHALL BE GRADE 60.

APPLY EPOXY PROTECTIVE COATING TO END OF GIRDER SURFACES INDICATED IN ELEVATION VIEW.

EMBEDDED PLATE "B-1" SHALL BE GALVANIZED IN ACCORDANCE WITH THE STANDARD SPECIFICATIONS. BEVEL EDGES OF PLATE "B-1" TO GIVE CLOSE FIT BUT NOT TIGHT FIT TO STEEL CASTING FORM.

ANCHOR STUDS SHALL CONFORM TO AASHTO M169 GRADES 1010 THROUGH 1020 OR APPROVED EQUAL, AND SHALL MEET THE TYPE "B" REQUIREMENTS OF SUBSECTION 7.3 OF THE ANSI/AASHTO/AWS D1.5 BRIDGE WELDING CODE.

AT ENDS OF GIRDERS TO BE EMBEDDED IN CONCRETE DIAPHRAGMS OR END WALLS, PRESTRESSING STRANDS MAY EXTEND A MAXIMUM OF 2" BEYOND THE GIRDER ENDS. OTHERWISE, PRESTRESSING STRANDS SHALL BE CUT FLUSH WITH THE GIRDER ENDS.

THE TRANSFER OF LOAD FROM THE ANCHORAGES TO THE GIRDER SHALL BE DONE WHEN CONCRETE HAS REACHED A COMPRESSIVE STRENGTH OF NOT LESS THAN 7000 PSI. FOR SPAN A AND 7400 PSI. FOR SPAN B.

DEPENDING ON THE TYPE OF SYSTEM USED TO SUPPORT THE DECK SLAB FORMS, PRESET ANCHORS MAY BE NECESSARY IN THE PRESTRESSED CONCRETE GIRDER.

THE TOP SURFACE OF THE GIRDER, EXCLUDING THE OUTSIDE 4", SHALL BE RAKED TO A DEPTH OF 1/4".

WHEN DRAPED STRANDS ARE DETAILED, THE LONGITUDINAL LOCATION OF THE HOLD DOWN DEVICES SHALL BE WITHIN 6" OF THE LOCATION SHOWN AND THE CENTER OF GRAVITY OF THE GROUP OF DRAPED STRANDS SHALL BE LOCATED WITHIN 1/2" OF THE THEORETICAL LOCATION SHOWN.

A 2" x 2" CHAMFER IS ALLOWED AT THE INTERSECTION OF THE WEB AND THE BOTTOM FLANGE OF THE 63" AND 72" MODIFIED BULB TEES ONLY.

THE CONTRACTOR HAS THE OPTION TO PROVIDE, AT NO ADDITIONAL COST TO THE DEPARTMENT, 2 ADDITIONAL STRANDS AT THE TOP OF THE GIRDER TO FACILITATE TYING OF THE REINFORCING STEEL. THESE STRANDS SHALL BE PULLED TO A LOAD OF 4500 lbs.

PROJECT NO. R-2707B
CLEVELAND COUNTY
STATION: 354+83.22-L-

SHEET 6 OF 6

STATE OF NORTH CAROLINA
DEPARTMENT OF TRANSPORTATION
RALEIGH

STANDARD

PRESTRESSED CONCRETE GIRDER CONTINUOUS FOR LIVE LOAD DETAILS

NORTH CAROLINA PROFESSIONAL SEAL 15825 ENGINEER BRUCE D. KLAPPENBACH
6-27-2013

REVISIONS						SHEET NO.
NO.	BY:	DATE:	NO.	BY:	DATE:	S-244
1			3			TOTAL SHEETS
2			4			266

DESIGN ENGINEER OF RECORD: - DATE : -			
ASSEMBLED BY : H. T. BARBOUR	DATE : 6-28-12		
CHECKED BY : D. A. GLADDEN	DATE : 2-13		
DRAWN BY : ELR 11/91	REV. 7/10/01RR	LES/RDR	
CHECKED BY : GRP 11/91	REV. 5/1/06	TLA/GM	
	REV. 10/1/11	MAA/GM	

14-MAY-2013 12:40
K:\Structures\Plans\Bailey\Str7\TBARBOUR\Microstation\R2707B_SD_TS.dgn
tbarbour

STR. #7

STD. NO. PCG9 (Sht. 5)

DEAD LOAD DEFLECTION TABLE FOR SPAN A

0.6" LOW RELAXATION	GIRDER 1																				
TWENTIETH POINTS	0.00	0.05	0.10	0.15	0.20	0.25	0.30	0.35	0.40	0.45	0.50	0.55	0.60	0.65	0.70	0.75	0.80	0.85	0.90	0.95	0.00
CAMBER (GIRDER ALONE IN PLACE) ↑	0.000	0.058	0.115	0.167	0.218	0.258	0.299	0.324	0.350	0.359	0.367	0.359	0.350	0.324	0.299	0.258	0.218	0.167	0.115	0.058	0.000
* DEFLECTION DUE TO SUPERIMPOSED D.L. ↓	0.000	0.021	0.041	0.060	0.078	0.093	0.107	0.116	0.126	0.129	0.132	0.129	0.126	0.116	0.107	0.093	0.078	0.060	0.041	0.021	0.000
FINAL CAMBER ↑	0.000	7/16"	7/8"	1 5/16"	1 11/16"	2"	2 5/16"	2 1/2"	2 11/16"	2 3/4"	2 13/16"	2 3/4"	2 11/16"	2 1/2"	2 5/16"	2"	1 11/16"	1 5/16"	7/8"	7/16"	0.000

DEAD LOAD DEFLECTION TABLE FOR SPAN A

0.6" LOW RELAXATION	GIRDERS 2, 3, 4, & 5																				
TWENTIETH POINTS	0.00	0.05	0.10	0.15	0.20	0.25	0.30	0.35	0.40	0.45	0.50	0.55	0.60	0.65	0.70	0.75	0.80	0.85	0.90	0.95	0.00
CAMBER (GIRDER ALONE IN PLACE) ↑	0.000	0.058	0.116	0.167	0.219	0.259	0.299	0.325	0.350	0.359	0.368	0.359	0.350	0.325	0.299	0.259	0.219	0.167	0.116	0.058	0.000
* DEFLECTION DUE TO SUPERIMPOSED D.L. ↓	0.000	0.022	0.045	0.065	0.085	0.100	0.116	0.126	0.136	0.139	0.143	0.139	0.136	0.126	0.116	0.100	0.085	0.065	0.045	0.022	0.000
FINAL CAMBER ↑	0.000	7/16"	7/8"	1 1/4"	1 5/8"	1 7/8"	2 3/16"	2 3/8"	2 9/16"	2 5/8"	2 11/16"	2 5/8"	2 9/16"	2 3/8"	2 3/16"	1 7/8"	1 5/8"	1 1/4"	7/8"	7/16"	0.000

DEAD LOAD DEFLECTION TABLE FOR SPAN A

0.6" LOW RELAXATION	GIRDER 6																				
TWENTIETH POINTS	0.00	0.05	0.10	0.15	0.20	0.25	0.30	0.35	0.40	0.45	0.50	0.55	0.60	0.65	0.70	0.75	0.80	0.85	0.90	0.95	0.00
CAMBER (GIRDER ALONE IN PLACE) ↑	0.000	0.058	0.116	0.167	0.219	0.259	0.299	0.325	0.351	0.359	0.368	0.359	0.351	0.325	0.299	0.259	0.219	0.167	0.116	0.058	0.000
* DEFLECTION DUE TO SUPERIMPOSED D.L. ↓	0.000	0.020	0.041	0.059	0.077	0.092	0.106	0.115	0.124	0.127	0.130	0.127	0.124	0.115	0.106	0.092	0.077	0.059	0.041	0.020	0.000
FINAL CAMBER ↑	0.000	7/16"	7/8"	1 5/16"	1 11/16"	2"	2 5/16"	2 1/2"	2 11/16"	2 13/16"	2 7/8"	2 13/16"	2 11/16"	2 1/2"	2 5/16"	2"	1 11/16"	1 5/16"	7/8"	7/16"	0.000

DEAD LOAD DEFLECTION TABLE FOR SPAN B

0.6" LOW RELAXATION	GIRDER 1																				
TWENTIETH POINTS	0.00	0.05	0.10	0.15	0.20	0.25	0.30	0.35	0.40	0.45	0.50	0.55	0.60	0.65	0.70	0.75	0.80	0.85	0.90	0.95	0.00
CAMBER (GIRDER ALONE IN PLACE) ↑	0.000	0.063	0.127	0.183	0.240	0.284	0.328	0.356	0.385	0.394	0.404	0.394	0.385	0.356	0.328	0.284	0.240	0.183	0.127	0.063	0.000
* DEFLECTION DUE TO SUPERIMPOSED D.L. ↓	0.000	0.023	0.047	0.068	0.089	0.105	0.122	0.132	0.142	0.146	0.149	0.146	0.142	0.132	0.122	0.105	0.089	0.068	0.047	0.023	0.000
FINAL CAMBER ↑	0.000	1/2"	15/16"	1 3/8"	1 13/16"	2 1/8"	2 1/2"	2 11/16"	2 7/8"	3"	3 1/16"	3"	2 7/8"	2 11/16"	2 1/2"	2 1/8"	1 13/16"	1 3/8"	15/16"	1/2"	0.000

DEAD LOAD DEFLECTION TABLE FOR SPAN B

0.6" LOW RELAXATION	GIRDERS 2, 3, 4, & 5																				
TWENTIETH POINTS	0.00	0.05	0.10	0.15	0.20	0.25	0.30	0.35	0.40	0.45	0.50	0.55	0.60	0.65	0.70	0.75	0.80	0.85	0.90	0.95	0.00
CAMBER (GIRDER ALONE IN PLACE) ↑	0.000	0.063	0.127	0.184	0.240	0.285	0.329	0.357	0.385	0.395	0.404	0.395	0.385	0.357	0.329	0.285	0.240	0.184	0.127	0.063	0.000
* DEFLECTION DUE TO SUPERIMPOSED D.L. ↓	0.000	0.025	0.051	0.073	0.096	0.114	0.131	0.143	0.154	0.158	0.162	0.158	0.154	0.143	0.131	0.114	0.096	0.073	0.051	0.025	0.000
FINAL CAMBER ↑	0.000	7/16"	15/16"	1 5/16"	1 3/4"	2 1/16"	2 3/8"	2 9/16"	2 3/4"	2 7/8"	2 15/16"	2 7/8"	2 3/4"	2 9/16"	2 3/8"	2 1/16"	1 3/4"	1 5/16"	15/16"	7/16"	0.000

DEAD LOAD DEFLECTION TABLE FOR SPAN B

0.6" LOW RELAXATION	GIRDER 6																				
TWENTIETH POINTS	0.00	0.05	0.10	0.15	0.20	0.25	0.30	0.35	0.40	0.45	0.50	0.55	0.60	0.65	0.70	0.75	0.80	0.85	0.90	0.95	0.00
CAMBER (GIRDER ALONE IN PLACE) ↑	0.000	0.064	0.127	0.184	0.240	0.285	0.329	0.357	0.385	0.395	0.405	0.395	0.385	0.357	0.329	0.285	0.240	0.184	0.127	0.064	0.000
* DEFLECTION DUE TO SUPERIMPOSED D.L. ↓	0.000	0.023	0.046	0.067	0.088	0.104	0.120	0.130	0.140	0.144	0.147	0.144	0.140	0.130	0.120	0.104	0.088	0.067	0.046	0.023	0.000
FINAL CAMBER ↑	0.000	1/2"	1"	1 3/8"	1 13/16"	2 3/16"	2 1/2"	2 3/4"	2 15/16"	3"	3 1/16"	3"	2 15/16"	2 3/4"	2 1/2"	2 3/16"	1 13/16"	1 3/8"	1"	1/2"	0.000

PROJECT NO. R-2707B
CLEVELAND COUNTY
STATION: 354+83.22-L-

STATE OF NORTH CAROLINA
DEPARTMENT OF TRANSPORTATION
RALEIGH

PRESTRESSED CONCRETE GIRDER CONTINUOUS FOR LIVE LOAD DETAILS

NORTH CAROLINA PROFESSIONAL SEAL 15825 ENGINEER BRUCE D. KLAPPENBACH
6-27-2013

REVISIONS						SHEET NO.
NO.	BY:	DATE:	NO.	BY:	DATE:	S-245
1			3			TOTAL SHEETS
2			4			266

DRAWN BY : V.X. NGUYEN DATE : 5-9-13
CHECKED BY : H.T. BARBOUR DATE : 5-10-13
DESIGN ENGINEER OF RECORD: DATE :

* INCLUDES FUTURE WEARING SURFACE
ALL VALUES ARE SHOWN IN DECIMAL FEET, EXCEPT "FINAL CAMBER" WHICH IS SHOWN IN INCHES (FRACTION FORM).

20-JUN-2013 12:05
K:\Structures\Plans\Bailey\Str7\vnguyen\R-2707B_SD_DL.dgn
tbarbour

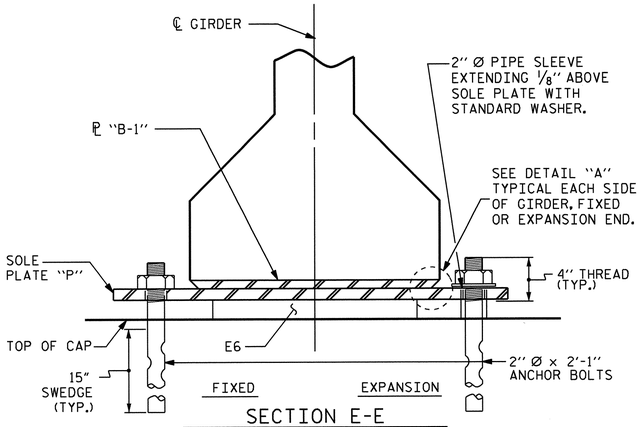

SECTION E-E

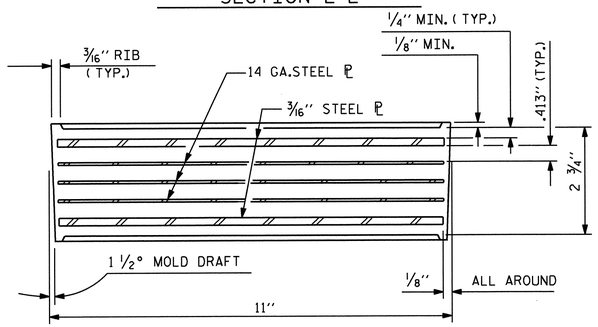

TYPICAL SECTION OF ELASTOMERIC BEARINGS

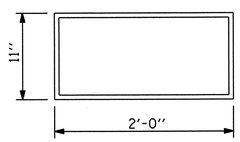

E6 (24 REQ'D)

PLAN VIEW OF ELASTOMERIC BEARING

TYPE VII

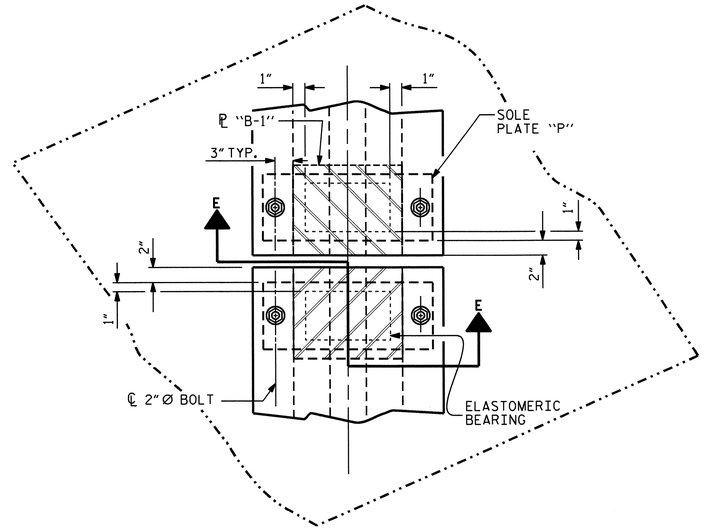

TYPICAL HALF-PLAN

(SHOWING CONTINUOUS BENT)

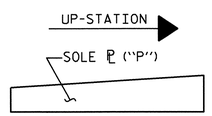

SOLE ℗ PLACEMENT DETAIL

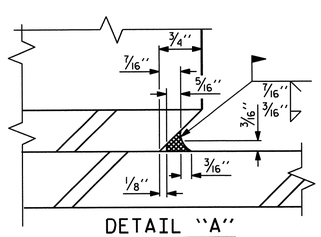

DETAIL "A"

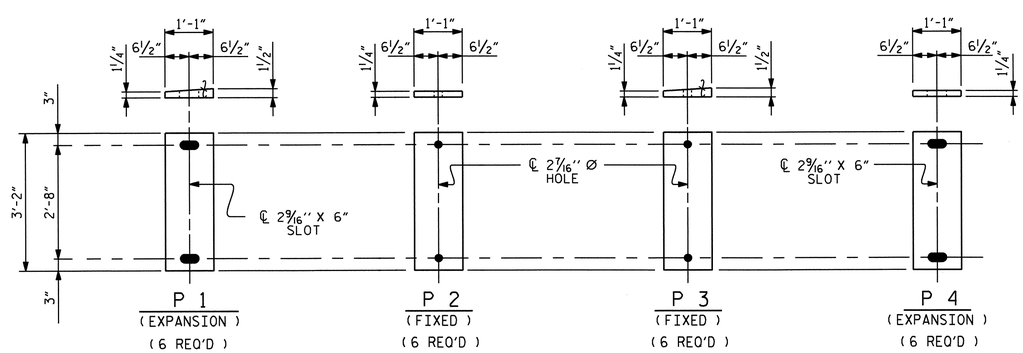

SOLE PLATE DETAILS ("P")

NOTES

AT ALL FIXED POINTS OF SUPPORT, NUTS FOR ANCHOR BOLTS ARE TO BE TIGHTENED FINGER TIGHT AND THEN BACKED OFF 1/2 TURN. THE THREAD OF THE NUT AND BOLT SHALL THEN BE BURRED WITH A SHARP POINTED TOOL.

THE 2" Ø PIPE SLEEVE SHALL BE CUT FROM SCHEDULE 40 PVC PLASTIC PIPE. THE PVC PLASTIC PIPE SHALL MEET THE REQUIREMENTS OF ASTM D1785.

STEEL SOLE PLATES, ANCHOR BOLTS, NUTS, AND WASHERS SHALL BE GALVANIZED IN ACCORDANCE WITH THE STANDARD SPECIFICATIONS.

PRIOR TO WELDING, GRIND THE GALVANIZED SURFACE OF THE PORTION OF THE EMBEDDED PLATE AND SOLE PLATE THAT ARE TO BE WELDED. AFTER WELDING, DAMAGED GALVANIZED SURFACES SHALL BE REPAIRED IN ACCORDANCE WITH THE STANDARD SPECIFICATIONS.

WHEN WELDING THE SOLE PLATE TO THE EMBEDDED PLATE IN THE GIRDER, USE TEMPERATURE INDICATING WAX PENS, OR OTHER SUITABLE MEANS, TO ENSURE THAT THE TEMPERATURE OF THE SOLE PLATE DOES NOT EXCEED 300°F. TEMPERATURES ABOVE THIS MAY DAMAGE THE ELASTOMER.

SOLE PLATE "P", BOLTS, NUTS, WASHERS, AND PIPE SLEEVE SHALL BE INCLUDED IN THE PAY ITEM FOR PRESTRESSED CONCRETE GIRDERS.

ANCHOR BOLTS SHALL MEET THE REQUIREMENTS OF ASTM A449. NUTS SHALL MEET THE REQUIREMENTS OF AASHTO M291-DH OR AASHTO M292-2H. WASHERS SHALL MEET THE REQUIREMENTS OF AASHTO M293. NO SHOP DRAWINGS ARE REQUIRED FOR ANCHOR BOLTS, NUTS AND WASHERS. SHOP INSPECTION IS REQUIRED.

ALL SURFACES OF BEARING PLATES SHALL BE SMOOTH AND STRAIGHT.

THE ELASTOMER IN THE STEEL REINFORCED BEARINGS SHALL HAVE A SHEAR MODULUS OF 0.160 KSI, IN ACCORDANCE WITH AASHTO M251.

FOR STEEL REINFORCED ELASTOMERIC BEARINGS, SEE SPECIAL PROVISIONS.

LOAD RATINGS	
	MAX.D.L.+ L.L.
TYPE VII	470 K

PROJECT NO. R-2707B
CLEVELAND COUNTY
STATION: 354+83.22-L-

STATE OF NORTH CAROLINA
DEPARTMENT OF TRANSPORTATION
RALEIGH

ELASTOMERIC BEARING DETAILS

PRESTRESSED CONCRETE GIRDER SUPERSTRUCTURE

NORTH CAROLINA PROFESSIONAL SEAL 15825 ENGINEER D. KLAPPENBACH
6-27-2013

REVISIONS							
NO.	BY:	DATE:	NO.	BY:	DATE:	SHEET NO. S-246
1			3			TOTAL SHEETS 266
2			4			

DESIGN ENGINEER OF RECORD: S. T. CHAMPION		DATE : 5-13	
ASSEMBLED BY : H. T. BARBOUR		DATE : 6-28-12	
CHECKED BY : D. A. GLADDEN		DATE : 2-13	
DRAWN BY : EEM 2/97	REV. 5/1/06	TLA/GM	
CHECKED BY : VAP 2/97	REV. 10/1/11	MAA/GM	
	REV. 10/24/12	AAC/MAA	

14-MAY-2013 12:40
K:\Structures\Plans\Bailey\Str7\TBARBOUR\Microstation\R2707B_SD_TS.dgn
tbarbour

STR. #7

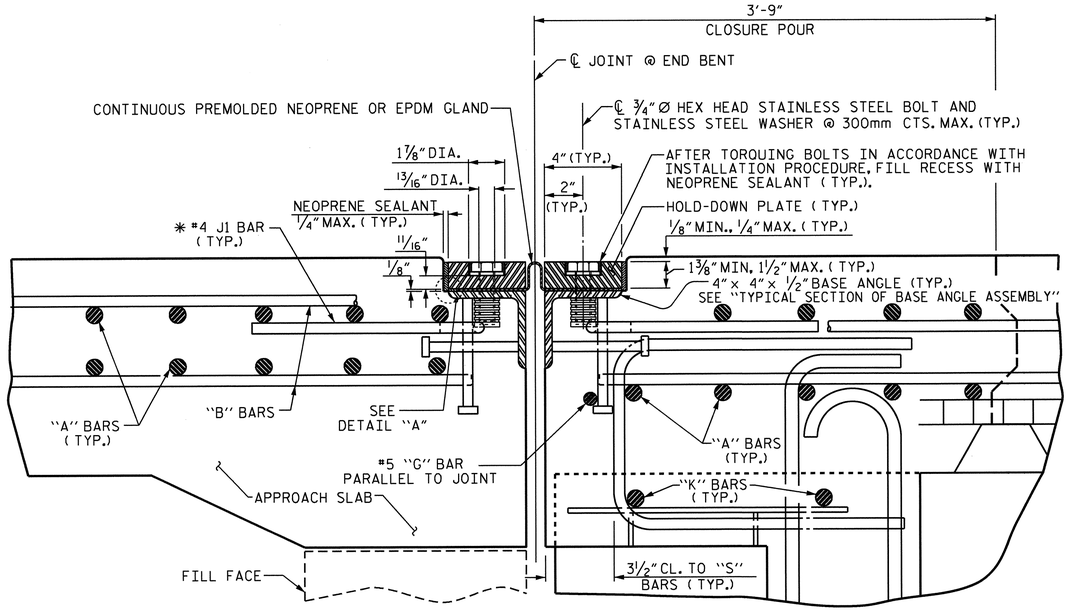

EXPANSION JOINT DETAILS

SECTION NORMAL TO JOINT -- PRESTRESSED GIRDER SUPERSTRUCTURE

* THE QUANTITY OF #4 J1 BARS ON THE BILL OF MATERIAL IS BASED ON 1'-0" CENTERS. J1 BARS SHALL BE PLACED AT EACH VERTICAL STUD ANCHOR BOLT. IN THE EVENT THAT THE NUMBER OF VERTICAL STUD ANCHORS EXCEEDS THE NUMBER OF J1 BARS SPECIFIED, ADDITIONAL J1 BARS WILL NOT BE REQUIRED.

INSTALLATION PROCEDURE

1. A TEMPLATE OR OTHER SUITABLE DEVICE SHALL BE USED TO FORM THE TOP OF THE EXPANSION JOINT SEAL BLOCKOUT TO THE PROPER DEPTH AND WIDTH. THE TEMPLATE SHALL BE 4⅛" TO 4¼" WIDE AND OF SUCH THICKNESS AS TO PROVIDE FOR CORRECT FINAL ELEVATION OF TOP OF HOLD-DOWN PLATES. THE TEMPLATE SHALL BE ATTACHED TO THE BASE ANGLE ASSEMBLY WITH THE ¾"Ø HEX HEAD BOLTS PROVIDED FOR THE HOLD-DOWN PLATES. A 1"Ø HOLE SHALL BE PROVIDED IN THE TEMPLATE CENTERED OVER EACH WEEP HOLE IN THE 4" X 4" X ½" BASE ANGLE. OTHER METHODS OF INSURING DRAINAGE THROUGH WEEP HOLES MAY BE EMPLOYED SUBJECT TO ENGINEER'S APPROVAL.
2. AFTER THE CONCRETE HAS BEEN CAST ON BOTH SIDES OF THE JOINT, REMOVE THE TEMPLATE. THOROUGHLY CLEAN THE BOLT HOLES AND THE ANGLE PLATE. REMOVE ANY EXCESS CONCRETE THAT COMES OUT OF THE WEEP HOLES. ANY DAMAGED STEEL SHALL BE COATED WITH A MINIMUM THICKNESS OF 4 DRY MILS OF ZINC-RICH PAINT IN ACCORDANCE WITH THE STANDARD SPECIFICATIONS.
3. LAY THE GLAND ON THE BASE ANGLE AND FIELD MARK THE GLAND FOR THE BOLT HOLES. HOLES IN THE GLAND SHALL BE PUNCHED ⅞" IN DIAMETER WITH A HAND PUNCH.
4. IN ORDER TO CHECK FOR PROPER ALIGNMENT, PLACE THE GLAND AND HOLD-DOWN PLATES ON THE BASE ANGLE. DO NOT APPLY NEOPRENE SEALANT. BOLT THE HOLD-DOWN PLATES TO THE BASE ANGLE BUT DO NOT TIGHTEN. THE ENGINEER SHALL INSPECT THE JOINT SEAL DEVICE FOR PROPER ALIGNMENT.
5. AFTER INSPECTION, REMOVE THE HOLD-DOWN PLATES AND GLAND. APPLY NEOPRENE SEALANT TO THE BASE ANGLE IN ACCORDANCE WITH THE "INSTALLATION SKETCH". PLACE GLAND AND HOLD-DOWN PLATES ON THE BASE ANGLE. BOLT THE HOLD-DOWN PLATES TO THE BASE ANGLE ASSEMBLY AND TORQUE THE BOLTS TO 88 FT-LBS WITH A TORQUE WRENCH. CHECK THE TORQUE AFTER THREE (3) HOURS AND, IF NECESSARY, RETIGHTEN TO 88 FT-LBS. A FINAL CHECK SHALL BE MADE AT SEVEN (7) DAYS. TORQUE SHALL NOT BE LESS THAN 80 FT-LBS AFTER SEVEN (7) DAYS.
6. AFTER PROPER TOROUING, CLEAN THE BOLT HOLE RECESSES AND THE RECESS BETWEEN THE JOINT SEAL DEVICE AND CONCRETE, COMPLETELY FILL THESE RECESSES WITH NEOPRENE SEALANT.

GENERAL NOTES

1. FOR EXPANSION JOINT SEALS, SEE SPECIAL PROVISIONS.
2. ALL PLATES AND ANGLES SHALL CONFORM TO AASHTO M270 GRADE 36 STEEL OR APPROVED EQUAL. ALL HOLD-DOWN BOLTS SHALL CONFORM TO ASTM F593 ALLOY 304 STAINLESS STEEL AND WASHERS SHALL CONFORM TO ASTM F844 EXCEPT THEY SHALL BE MADE FROM ALLOY 304 STAINLESS STEEL. ALL STUD ANCHORS SHALL CONFORM TO AASHTO M169, GRADES 1010 THRU 1020 OR APPROVED EQUAL. ALL CONCRETE INSERTS SHALL BE CLOSED END AND SHALL CONFORM TO AASHTO M169, GRADE 12L14. TENSILE CAPACITY SHALL BE 3000 LBS. MIN.
3. A PREMOLDED CORRUGATED OR NON-CORRUGATED GLAND SHALL BE USED FOR JOINTS SKEWED BETWEEN 50° THRU 130°. FOR JOINTS SKEWED LESS THAN 50° OR MORE THAN 130°, ONLY A CORRUGATED GLAND SHALL BE USED.
4. CLOSED END FERRULES AND STUD ANCHORS SHALL BE SHOP WELDED AND ALL HOLES SHALL BE SHOP DRILLED AS SHOWN ON PLANS. STUD ANCHORS SHALL BE ELECTRIC ARC END WELDED WITH COMPLETE FUSION.
5. SURFACES COMING IN CONTACT WITH NEOPRENE SHALL BE GROUND SMOOTH PRIOR TO METALLIZING.
6. UPON COMPLETION OF SHOP FABRICATION, THE HOLD DOWN PLATE AND BASE ANGLE ASSEMBLY, AS SHOWN IN THE "TYPICAL SECTION OF BASE ANGLE ASSEMBLY", SHALL BE METALLIZED. SEE SPECIAL PROVISION FOR THERMAL SPRAYED COATINGS (METALLIZATION).
7. BASE ANGLE ASSEMBLY SHALL BE CONTINUOUS FOR THE LENGTH OF THE JOINT. AT CROWN BREAKS, THE ENDS OF THE BASE ANGLE ASSEMBLY SHALL BE CUT PARALLEL TO THE BRIDGE CENTERLINE FOR SKEWS LESS THAN 80° AND GREATER THAN 100°. FINISHED WELD SHALL BE GROUND SMOOTH AND COATED WITH A MINIMUM THICKNESS OF 4 DRY MILS OF ZINC-RICH PAINT IN ACCORDANCE WITH THE STANDARD SPECIFICATIONS.
8. FIELD SPLICES OF HOLD-DOWN PLATES SHALL BE KEPT TO A MINIMUM. CONTRACTOR SHALL FURNISH DETAILED PLANS SHOWING PROPOSED SPLICE LOCATIONS FOR APPROVAL. HOLD-DOWN PLATES SHALL NOT EXCEED 20' LENGTHS UNLESS APPROVED BY THE ENGINEER.
9. NO ALTERNATE JOINT DETAILS SHALL BE PERMITTED IN LIEU OF THOSE SHOWN ON THESE PLANS.
10. THE CONTRACTOR MAY, AT HIS OPTION, USE ADHESIVELY ANCHORED ANCHOR BOLTS IN PLACE OF CONCRETE INSERTS FOR COVER PLATES. THE YIELD LOAD OF THE ¾"Ø BOLT IS 10 KIPS. FIELD TESTING OF THE ADHESIVE BONDING SYSTEM IS NOT REQUIRED.

MOVEMENT AND SETTING AT JOINT					
END BENT No.	SKEW ANGLE	TOTAL MOVEMENT (ALONG ℄ RDWY)	PERPENDICULAR JOINT OPENING AT 45° F	PERPENDICULAR JOINT OPENING AT 60° F	PERPENDICULAR JOINT OPENING AT 90° F
#1	67°-22'-20"	15/16"	1⅝"	1 7/16"	1⅛"
#2	65°-04'-11"	15/16"	1⅝"	1 7/16"	1⅛"

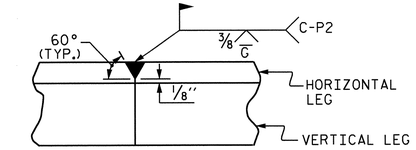

DETAIL- FIELD WELD SPLICE OF BASE ANGLE

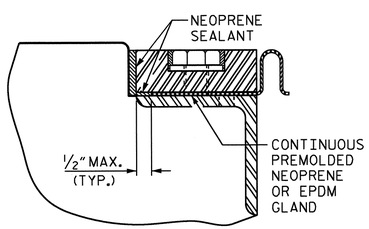

DETAIL "A"

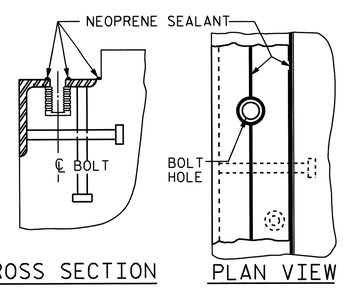

CROSS SECTION PLAN VIEW

INSTALLATION SKETCH

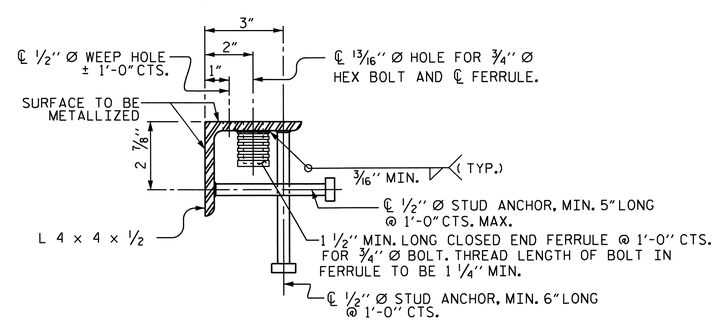

TYPICAL SECTION OF BASE ANGLE ASSEMBLY

PROJECT NO. R-2707B
CLEVELAND COUNTY
STATION: 354+83.22-L-

SHEET 1 OF 2

STATE OF NORTH CAROLINA
DEPARTMENT OF TRANSPORTATION
RALEIGH

EXPANSION JOINT SEAL DETAILS

NORTH CAROLINA PROFESSIONAL SEAL 15825 ENGINEER BRYAN E. MONNEER D. KLAPPENBACH 6-27-2013

REVISIONS						SHEET NO. S-247
NO.	BY:	DATE:	NO.	BY:	DATE:	TOTAL SHEETS 266
1			3			
2			4			

STR. #7 (SHT 1)

DESIGN ENGINEER OF RECORD: - DATE: -

ASSEMBLED BY :	H. T. BARBOUR	DATE :	6-28-12
CHECKED BY :	D. A. GLADDEN	DATE :	2-13
DRAWN BY : REK	9/87	REV. 5/7/03R	RWW/JTE
CHECKED BY : CRK	10/87	REV. 5/1/06R	TLA/GM
		REV. 10/1/11	MAA/GM

14-MAY-2013 12:40
K:\Structures\Plans\Bolley\Str7\TBARBOUR\Microstation\R2707B_SD_TS.dgn
tbarbour

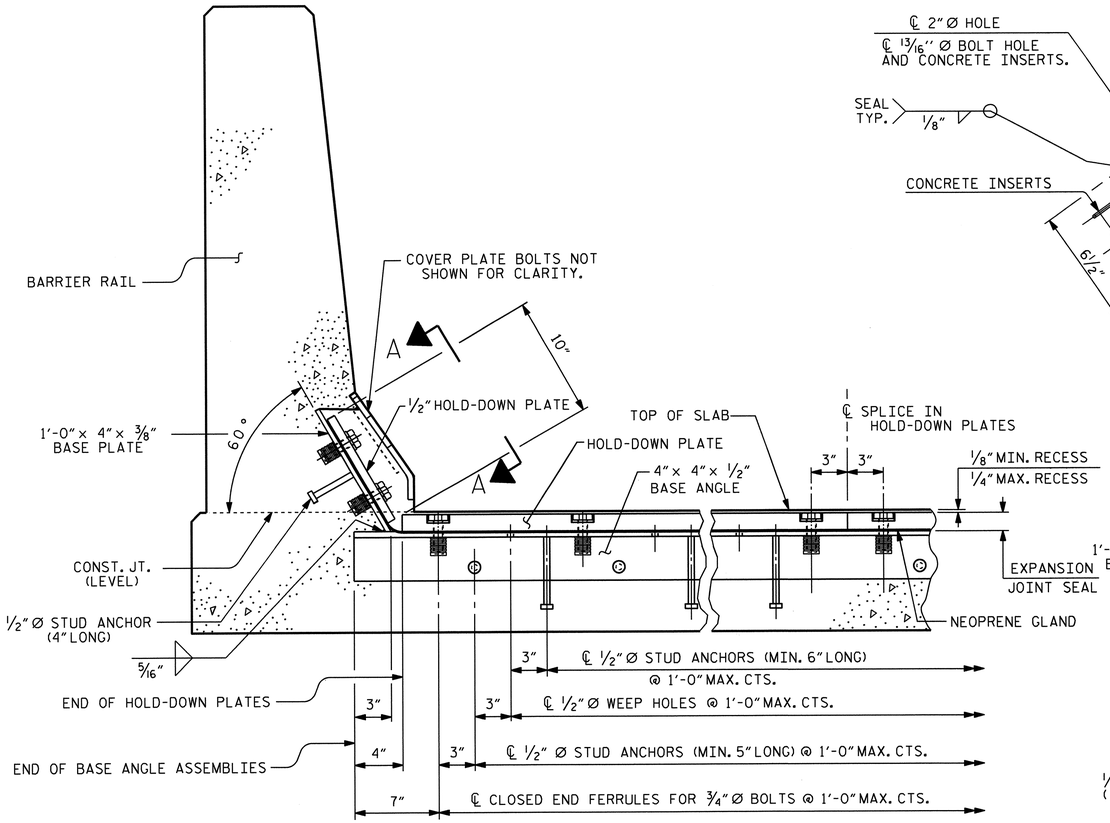

SECTION THRU RAIL NORMAL TO JOINT

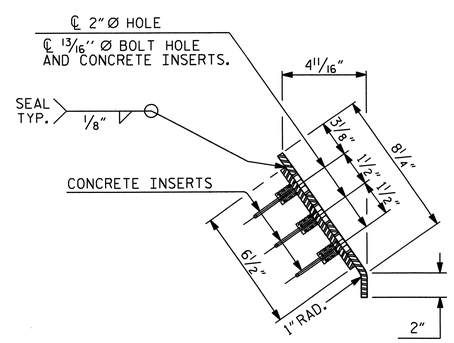

END VIEW

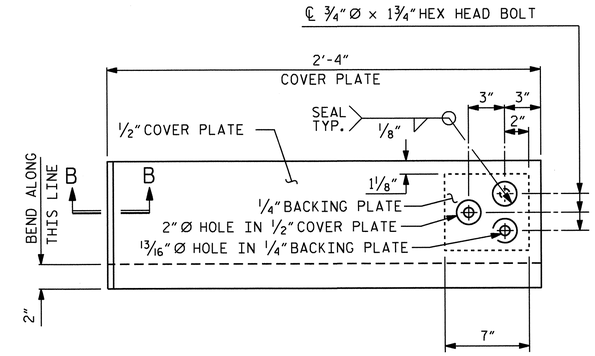

TYPE II - ELEVATION VIEW

COVER PLATE DETAILS

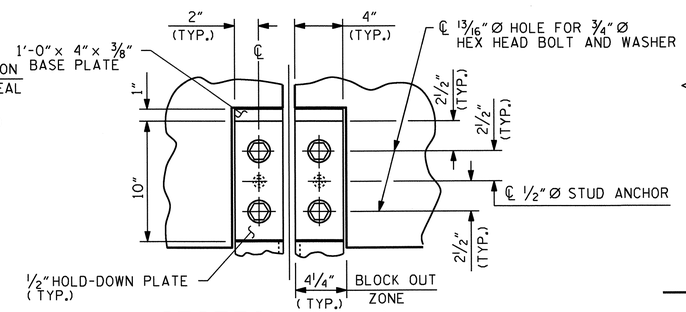

SECTION A - A

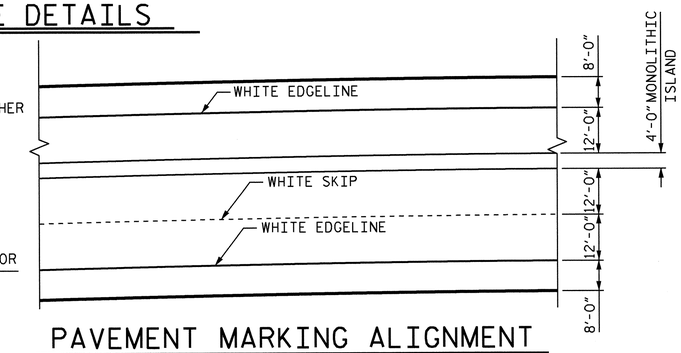

PAVEMENT MARKING ALIGNMENT

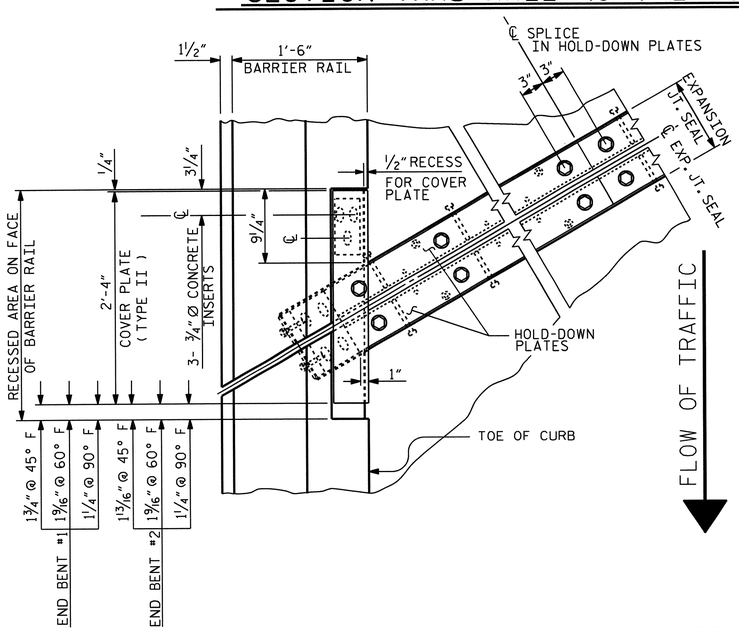

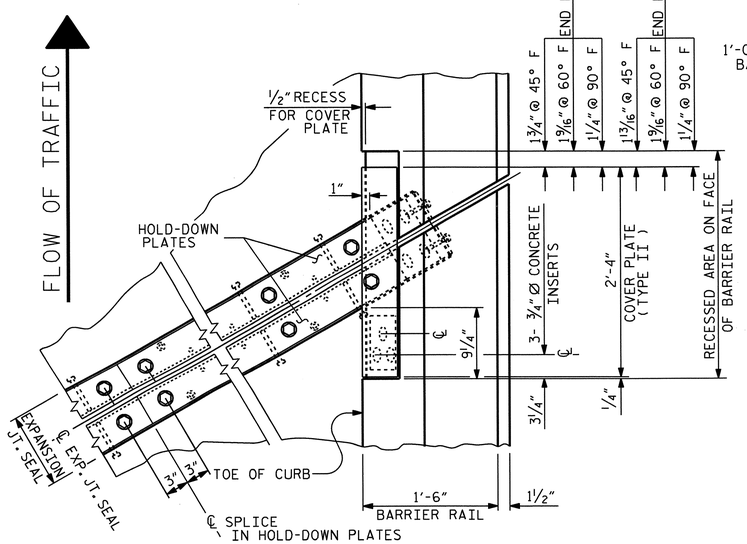

PLAN OF EXPANSION JOINT SEAL

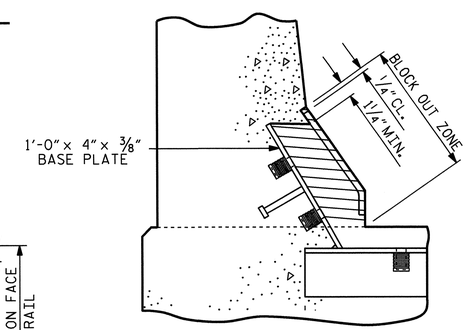

BLOCK OUT DETAIL

SEE " SECTION A - A " FOR OTHER DETAILS.

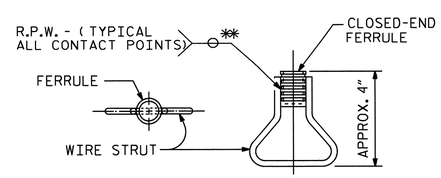

CONCRETE INSERT

** EACH WELDED ATTACHMENT OF WIRE TO FERRULE SHALL DEVELOP THE TENSILE STRENGTH OF THE WIRE.

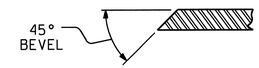

SECTION B - B

PROJECT NO. R-2707B

CLEVELAND COUNTY

STATION: 354+83.22-L-

SHEET 2 OF 2

STATE OF NORTH CAROLINA
DEPARTMENT OF TRANSPORTATION
RALEIGH

STANDARD

EXPANSION JOINT SEAL DETAILS FOR BARRIER RAIL

ASSEMBLED BY : H. T. BARBOUR	DATE : 6-28-12		
CHECKED BY : D. A. GLADDEN	DATE : 2-13		
DRAWN BY : REK 9/87	REV. 10/1/11 MAA/GM	DESIGN ENGINEER OF RECORD:	
CHECKED BY : CRK 10/87	REV. 7/12 MAA/GM		
	REV. 10/12 MAA/GM	DATE : -	

REVISIONS								SHEET NO.
NO.	BY:	DATE:	NO.	BY:	DATE:			S-248
1			3					TOTAL SHEETS
2			4					266

STD. NO. EJS2 SHT 3

14-MAY-2013 12:40
K:\Structures\Plans\Bailey\Str7\TBARBOUR\Microstation\R2707B_SD_TS.dgn
tbarbour

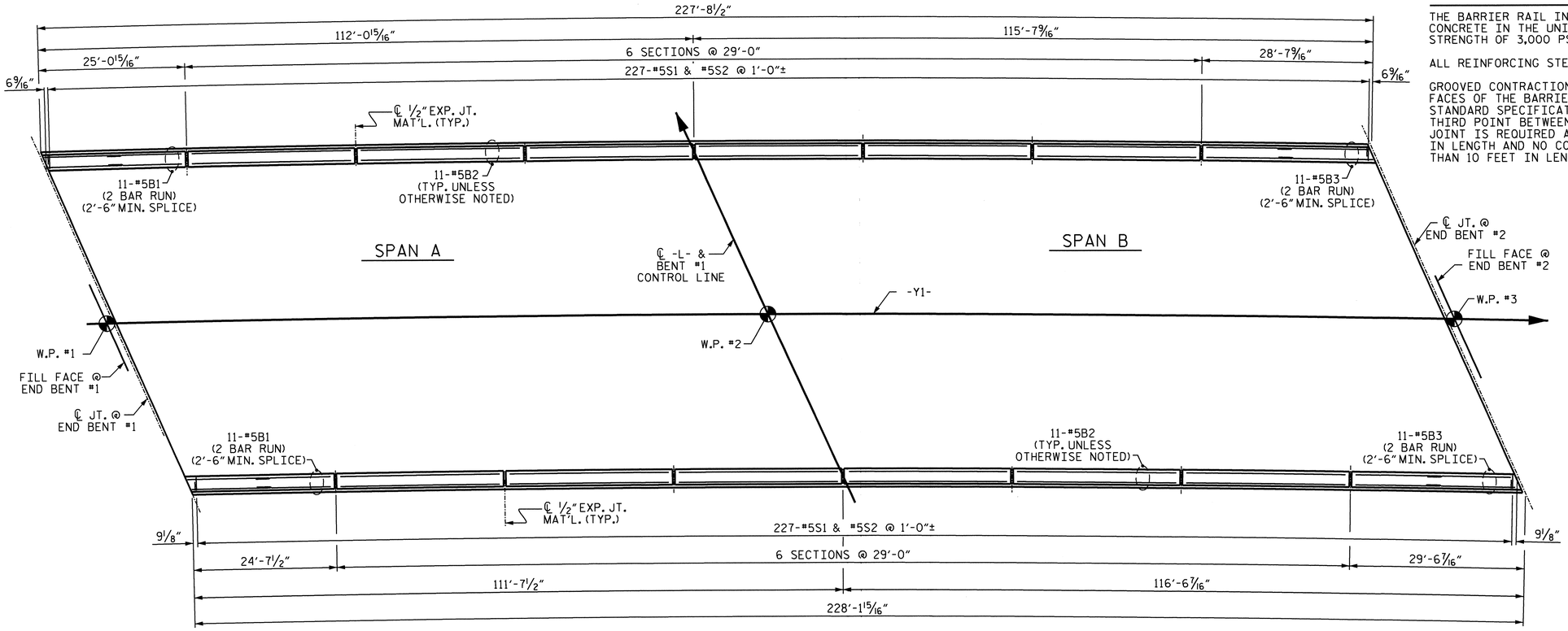

NOTES

THE BARRIER RAIL IN A CONTINUOUS UNIT SHALL NOT BE CAST UNTIL ALL SLAB CONCRETE IN THE UNIT HAS BEEN CAST AND HAS REACHED A MINIMUM COMPRESSIVE STRENGTH OF 3,000 PSI.

ALL REINFORCING STEEL IN BARRIER RAILS SHALL BE EPOXY COATED.

GROOVED CONTRACTION JOINTS, ½" IN DEPTH, SHALL BE TOOLED IN ALL EXPOSED FACES OF THE BARRIER RAIL AND IN ACCORDANCE WITH ARTICLE 825-10(B) OF THE STANDARD SPECIFICATIONS. THE CONTRACTION JOINT SHALL BE LOCATED AT EACH THIRD POINT BETWEEN BARRIER RAIL EXPANSION JOINTS. ONLY ONE CONTRACTION JOINT IS REQUIRED AT MIDPOINT OF BARRIER RAIL SEGMENTS LESS THAN 20 FEET IN LENGTH AND NO CONTRACTION JOINTS ARE REQUIRED FOR THOSE SEGMENTS LESS THAN 10 FEET IN LENGTH.

BAR TYPES

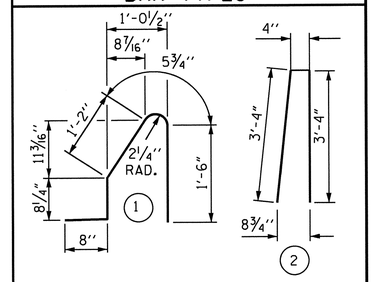

ALL BAR DIMENSIONS ARE OUT TO OUT

BILL OF MATERIAL

FOR CONCRETE BARRIER RAIL ONLY

BAR	NO.	SIZE	TYPE	LENGTH	WEIGHT
* S1	454	#5	1	4'-6"	2131
* S2	454	#5	2	7'-0"	3315
* B1	44	#5	STR.	13'-5"	620
* B2	132	#5	STR.	28'-7"	3935
* B3	44	#5	STR.	15'-9"	723

* EPOXY COATED REINFORCING STEEL	10724 LBS.
CLASS AA CONCRETE	61.9 CU. YDS.
CONCRETE BARRIER RAIL SUPERSTRUCTURE	455.87 LIN. FT.

FOR EPOXY COATED REINFORCING STEEL AND CLASS AA CONCRETE IN THE BARRIER RAIL ON THE APPROACH SLABS, SEE "BRIDGE APPROACH SLAB DETAILS" SHEET.

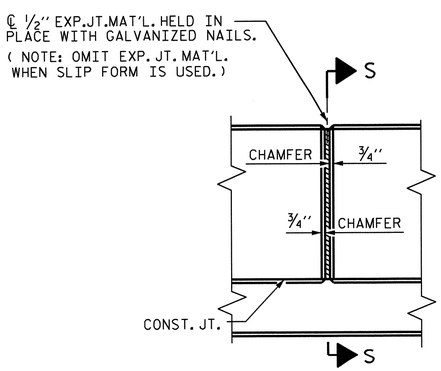

ELEVATION AT EXPANSION JOINTS

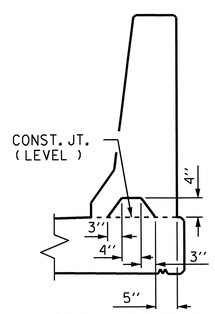

SECTION S-S

AT DAM IN OPEN JOINT
(THIS IS TO BE USED ONLY WHEN SLIP FORM IS USED)

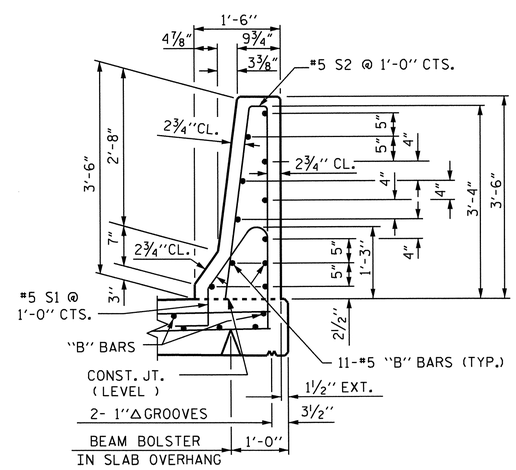

SECTION THRU RAIL

PROJECT NO. R-2707B

CLEVELAND COUNTY

STATION: 354+83.22-L-

STATE OF NORTH CAROLINA
DEPARTMENT OF TRANSPORTATION
RALEIGH

CONCRETE BARRIER RAIL

NORTH CAROLINA PROFESSIONAL SEAL 16825 ENGINEER BRUCE C. MONROE D. KLAPPENBACH
6-27-2013

REVISIONS						SHEET NO. S-249
NO.	BY:	DATE:	NO.	BY:	DATE:	TOTAL SHEETS 266
1			3			
2			4			

DESIGN ENGINEER OF RECORD: - DATE : -

DRAWN BY : H. T. BARBOUR DATE : 7-03-12

CHECKED BY : D. A. GLADDEN DATE : 2-13

20-JUN-2013 12:08
K:\Structures\Plans\Bailey\Str7\TBARBOUR\Microstation\R2707B_SD_TS.dgn
tbarbour

STR. #7

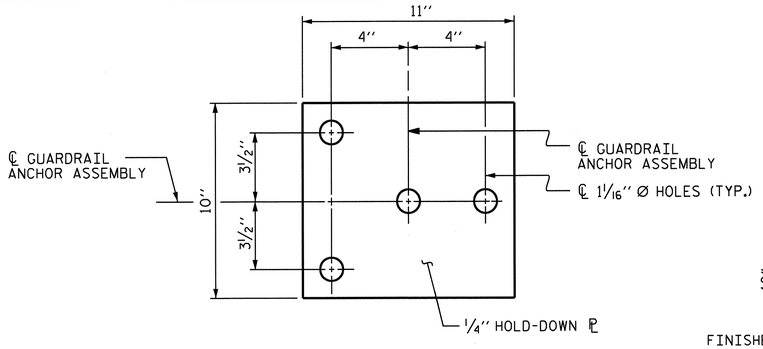

PLAN

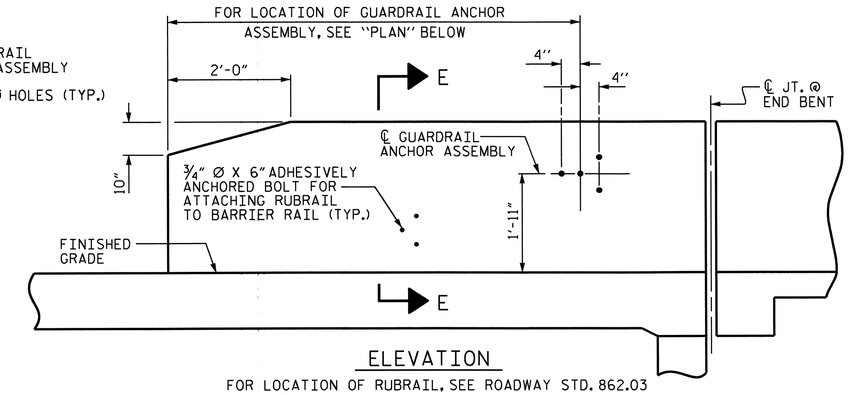

ELEVATION

FOR LOCATION OF RUBRAIL, SEE ROADWAY STD. 862.03

NOTES

THE GUARDRAIL ANCHOR ASSEMBLY SHALL CONSIST OF A 1/4'' HOLD-DOWN PLATE AND 4 - 7/8'' Ø BOLTS WITH NUTS AND WASHERS, RUBRAIL, AND ADHESIVELY ANCHORED BOLTS.

THE HOLD-DOWN PLATE SHALL CONFORM TO AASHTO M270 GRADE 36. AFTER FABRICATION, THE HOLD-DOWN PLATE SHALL BE HOT-DIP GALVANIZED IN ACCORDANCE WITH AASHTO M111.

BOLTS SHALL CONFORM TO THE REQUIREMENTS OF ASTM A307 AND NUTS SHALL CONFORM TO THE REQUIREMENTS OF AASHTO M291. BOLTS, NUTS AND WASHERS SHALL BE GALVANIZED. (AT THE CONTRACTOR'S OPTION, STAINLESS STEEL BOLTS, NUTS AND WASHERS MAY BE USED AS AN ALTERNATE FOR THE 7/8'' Ø GALVANIZED BOLTS, NUTS AND WASHERS. THEY SHALL CONFORM TO OR EXCEED THE MECHANICAL REQUIREMENTS OF ASTM A307. THE USE OF THIS ALTERNATE SHALL BE APPROVED BY THE ENGINEER.)

THE GUARDRAIL ANCHOR ASSEMBLY IS REQUIRED AT ALL POINTS WHERE APPROACH GUARDRAIL IS TO BE ATTACHED TO THE END OF BARRIER RAIL. FOR POINTS OF ATTACHMENT, SEE SKETCH.

AFTER INSTALLATION, THE EXPOSED THREAD OF THE BOLT SHALL BE BURRED WITH A SHARP POINTED TOOL.

THE COST OF THE GUARDRAIL ANCHOR ASSEMBLY SHALL BE INCLUDED IN THE UNIT CONTRACT PRICE BID FOR CONCRETE BARRIER RAIL.

THE 1 1/4'' Ø HOLES SHALL BE FORMED OR DRILLED WITH A CORE BIT. IMPACT TOOLS WILL NOT BE PERMITTED. ANY CONCRETE DAMAGED BY THIS WORK SHALL BE REPAIRED TO THE SATISFACTION OF THE ENGINEER.

THE C6 X 8.2 RUBRAIL IS TO BE ADHESIVELY ANCHORED TO THE RAIL USING THREE 3/4"Ø X 6" BOLTS WITH WASHERS. LEVEL ONE FIELD TESTING IS REQUIRED, AND THE YIELD LOAD OF THE 3/4"Ø BOLT IS 12 KIPS. FOR ADHESIVELY ANCHORED ANCHOR BOLTS OR DOWELS, SEE STANDARD SPECIFICATIONS. SEE ROADWAY STANDARD 862.03 FOR DETAILS AND LOCATION OF THE RUBRAIL.

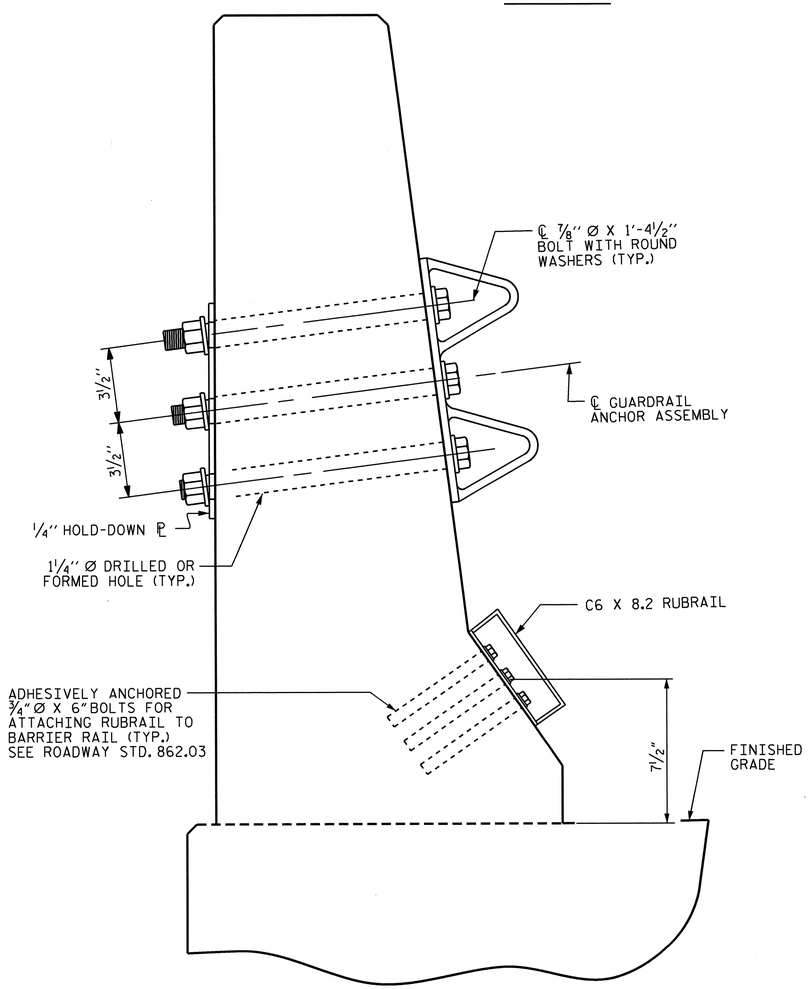

SECTION E-E

GUARDRAIL ANCHOR ASSEMBLY DETAILS

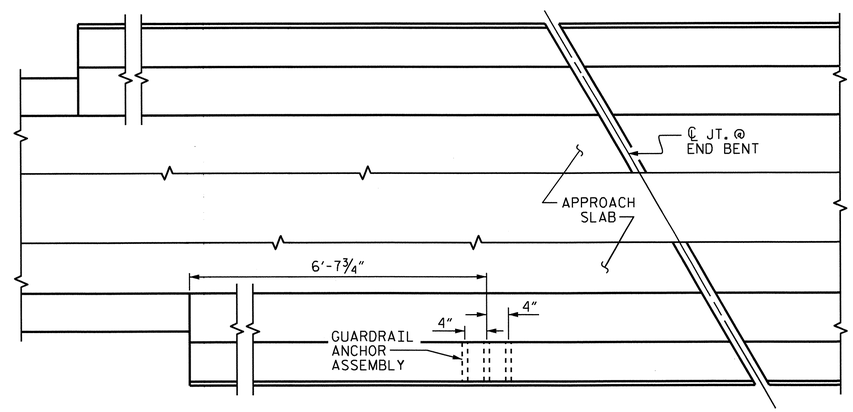

PLAN

LOCATION OF ANCHORS FOR GUARDRAIL

END BENT #1 SHOWN, END BENT #2 SIMILAR.

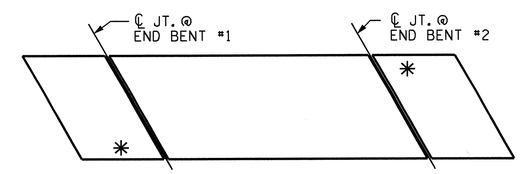

SKETCH SHOWING POINTS OF ATTACHMENTS

✳ DENOTES GUARDRAIL ANCHOR ASSEMBLY

PROJECT NO. R-2707B
CLEVELAND COUNTY
STATION: 354+83.22-L-

STATE OF NORTH CAROLINA
DEPARTMENT OF TRANSPORTATION
RALEIGH

GUARDRAIL ANCHORAGE FOR 3'-6" BARRIER RAIL

NORTH CAROLINA PROFESSIONAL SEAL 15825 ENGINEER D. KL. APPENRODT
6-27-2013

REVISIONS						SHEET NO.
NO.	BY:	DATE:	NO.	BY:	DATE:	S-250
1			3			TOTAL SHEETS
2			4			266

STR. #7 STD. NO. GRA2

ASSEMBLED BY : H. T. BARBOUR	DATE : 7-02-12	
CHECKED BY : D. A. GLADDEN	DATE : 2-13	
DRAWN BY : TLA 5/06	ADDED 5/1/06RR KMM/GM	DESIGN ENGINEER OF RECORD:
CHECKED BY : GM 5/06	REV. 10/1/11 MAA/GM	- DATE : -

20-JUN-2013 12:11
K:\Structures\Plans\Bailey\Str7\TBARBOUR\Microstation\R2707B_SD_TS.dgn
tbarbour

NOTES

NO SEPARATE MEASUREMENT OR PAYMENT WILL BE MADE FOR MATERIALS OR LABOR TO CONSTRUCT THE CONCRETE MEDIAN. THE ENTIRE COST OF THIS WORK SHALL BE INCLUDED IN THE LUMP SUM PRICE BID FOR THE REINFORCED CONCRETE DECK SLAB.

FOR LOCATION OF CONCRETE MEDIAN, SEE ROADWAY PLANS.

ALL REINFORCING STEEL IN CONCRETE MEDIANS SHALL BE EPOXY COATED.

BILL OF MATERIAL
CONCRETE MEDIAN

BAR	NO.	SIZE	TYPE	LENGTH	WEIGHT
* B4	27	4	STR	27'-10"	211
* B5	6	4	STR	24'-7"	99
* M1	183	4	STR	2'-8"	326
* EPOXY COATED REINFORCING STEEL					636 LBS
CLASS AA CONCRETE					15.2 CU. YDS.

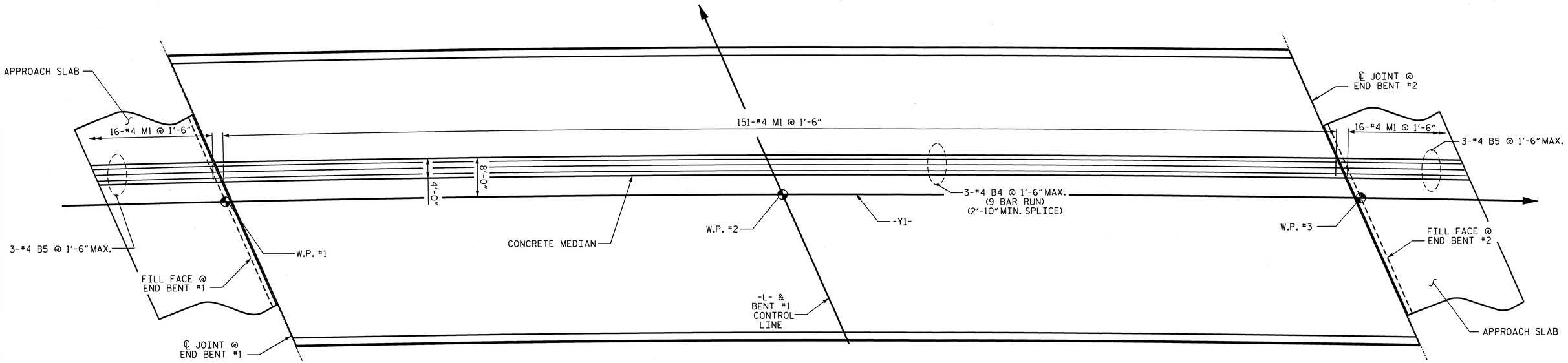

SPAN A

SPAN B

PLAN

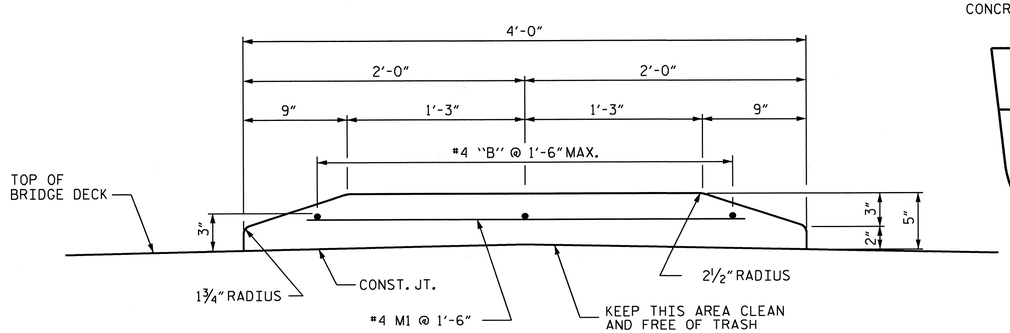

SECTION THRU CONCRETE MEDIAN

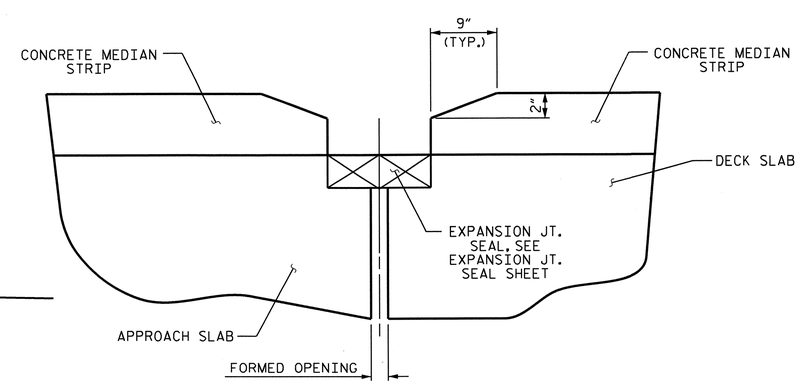

SECTION @ JOINT

PROJECT NO. R-2707B
CLEVELAND COUNTY
STATION: 354+83.22-L-

STATE OF NORTH CAROLINA
DEPARTMENT OF TRANSPORTATION
RALEIGH

SUPERSTRUCTURE CONCRETE MEDIAN DETAILS

NORTH CAROLINA PROFESSIONAL SEAL 15825 ENGINEER BRUCE D. KLAPPENBACH 6-27-2013

REVISIONS						SHEET NO. S-251
NO.	BY:	DATE:	NO.	BY:	DATE:	TOTAL SHEETS 266
1			3			
2			4			

DRAWN BY : H. T. BARBOUR DATE : 7-5-12
CHECKED BY : D. A. GLADDEN DATE : 2-13

20-JUN-2013 12:14
K:\Structures\Plans\Bailey\Str7\TBARBOUR\Microstation\R2707B_SD_TS.dgn
tbarbour

STR. #7

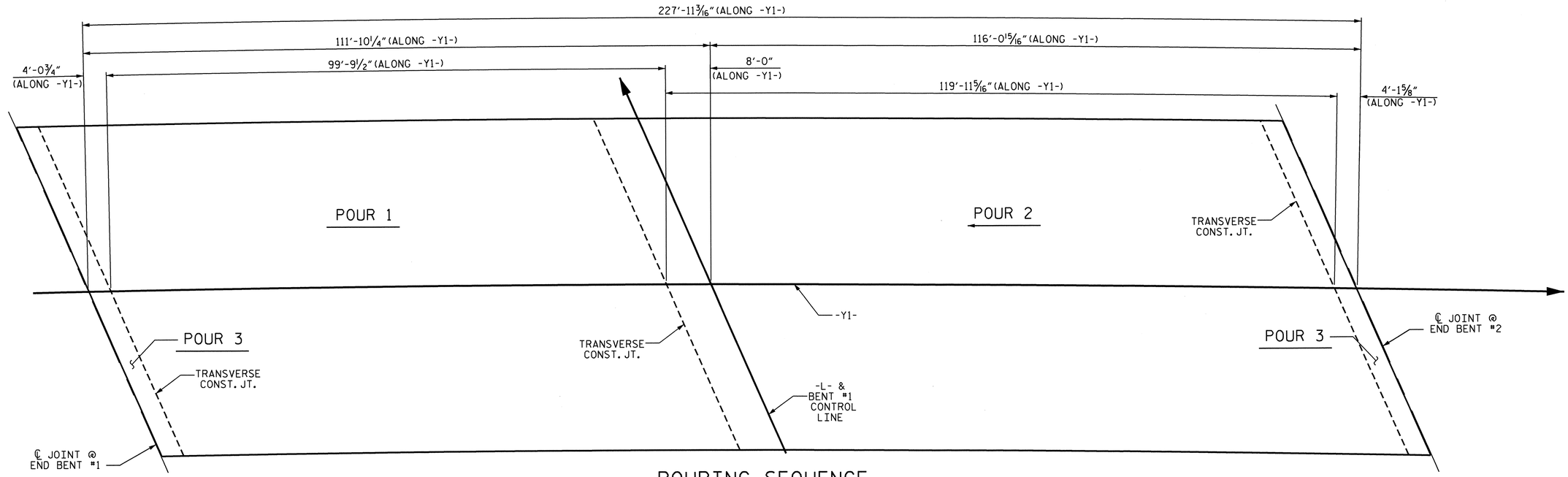

POURING SEQUENCE

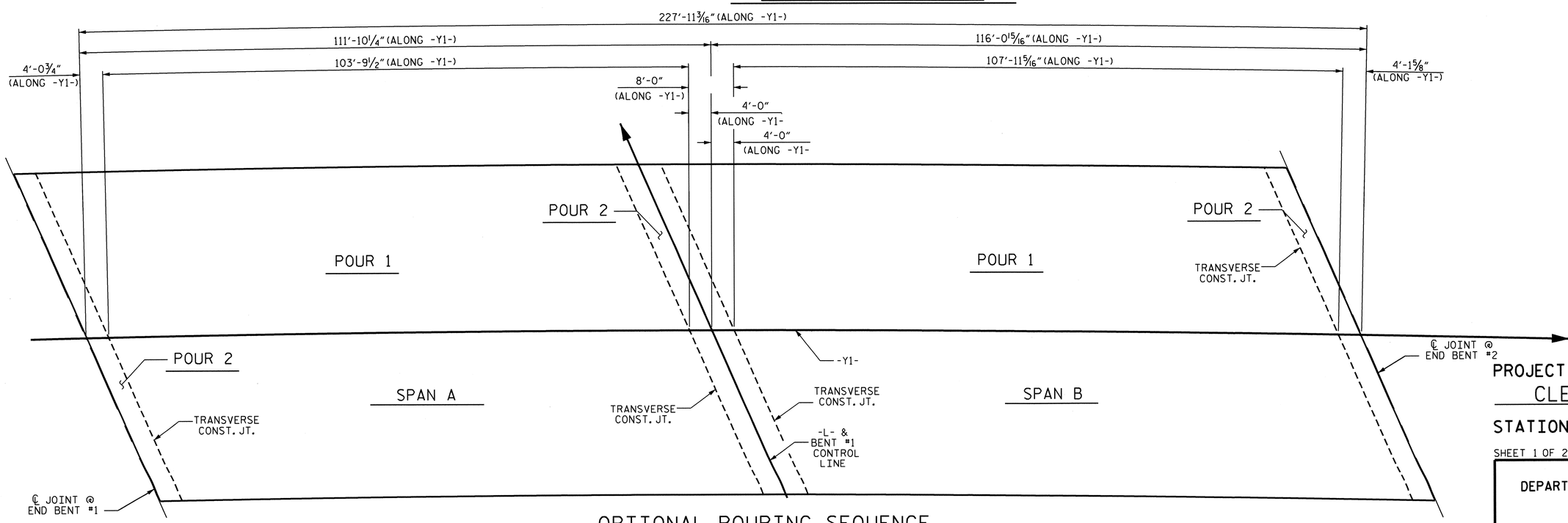

OPTIONAL POURING SEQUENCE

(POUR #2 CAN NOT BE STARTED UNTIL BOTH ADJACENT #1 POURS REACH A MINIMUM OF 3000 PSI.)

PROJECT NO. R-2707B

CLEVELAND COUNTY

STATION: 354+83.22-L-

SHEET 1 OF 2

STATE OF NORTH CAROLINA
DEPARTMENT OF TRANSPORTATION
RALEIGH

SUPERSTRUCTURE BILL OF MATERIAL

NORTH CAROLINA PROFESSIONAL SEAL 15825 ENGINEER BRIDGE D. KLAPPENBACH 6-27-2013

REVISIONS						SHEET NO.
NO.	BY:	DATE:	NO.	BY:	DATE:	S-252
1			3			TOTAL SHEETS
2			4			266

DESIGN ENGINEER OF RECORD: - DATE : -

DRAWN BY : H. T. BARBOUR DATE : 7-5-12

CHECKED BY : D. A. GLADDEN DATE : 2-13

20-JUN-2013 12:16
K:\Structures\Plans\Bailey\Str7\TBARBOUR\Microstation\R2707B_SD_TS.dgn
tbarbour

STR. #7

REINFORCING BAR SCHEDULE
SPANS A AND B

BAR	NO.	SIZE	TYPE	LENGTH	WEIGHT
✱ A1	345	#5	STR	58'-11"	21200
A2	345	#5	STR	58'-11"	21200
✱A101	2	#5	STR	57'-2"	119
✱A102	2	#5	STR	54'-6"	114
✱A103	2	#5	STR	51'-10"	108
✱A104	2	#5	STR	49'-1"	102
✱A105	2	#5	STR	46'-5"	97
✱A106	2	#5	STR	43'-9"	91
✱A107	2	#5	STR	41'-1"	86
✱A108	2	#5	STR	38'-5"	80
✱A109	2	#5	STR	35'-9"	75
✱A110	2	#5	STR	33'-1"	69
✱A111	2	#5	STR	30'-5'	63
✱A112	2	#5	STR	27'-9"	58
✱A113	2	#5	STR	25'-1"	52
✱A114	2	#5	STR	22'-5"	47
✱A115	2	#5	STR	19'-9"	41
✱A116	2	#5	STR	17'-1"	36
✱A117	2	#5	STR	14'-5"	30
✱A118	2	#5	STR	11'-9"	25
✱A119	2	#5	STR	9'-1"	19
✱A120	2	#5	STR	6'-5"	13
✱A121	2	#5	STR	3'-9"	8
✱A122	1	#5	STR	2'-5"	3
✱A123	2	#5	STR	57'-1"	119
✱A124	2	#5	STR	54'-6"	114
✱A125	2	#5	STR	51'-10"	108
✱A126	2	#5	STR	49'-3"	103
✱A127	2	#5	STR	46'-7"	97
✱A128	2	#5	STR	44'-0"	92
✱A129	2	#5	STR	41'-4"	86
✱A130	2	#5	STR	38'-9"	81
✱A131	2	#5	STR	36'-1"	75
✱A132	2	#5	STR	33'-6"	70
✱A133	2	#5	STR	30'-10'	64
✱A134	2	#5	STR	28'-3"	59
✱A135	2	#5	STR	25'-7"	53
✱A136	2	#5	STR	23'-0"	48
✱A137	2	#5	STR	20'-4"	42
✱A138	2	#5	STR	17'-9"	37
✱A139	2	#5	STR	15'-1"	31
✱A140	2	#5	STR	12'-6"	26
✱A141	2	#5	STR	9'-10"	21
✱A142	2	#5	STR	7'-3"	15
✱A143	2	#5	STR	4'-7'	10
✱A144	2	#5	STR	2'-0"	4

BAR	NO.	SIZE	TYPE	LENGTH	WEIGHT
A201	2	#5	STR	57'-2"	119
A202	2	#5	STR	54'-6"	114
A203	2	#5	STR	51'-10"	108
A204	2	#5	STR	49'-1"	102
A205	2	#5	STR	46'-5"	97
A206	2	#5	STR	43'-9"	91
A207	2	#5	STR	41'-1"	86
A208	2	#5	STR	38'-5"	80
A209	2	#5	STR	35'-9"	75
A210	2	#5	STR	33'-1"	69
A211	2	#5	STR	30'-5'	63
A212	2	#5	STR	27'-9"	58
A213	2	#5	STR	25'-1"	52
A214	2	#5	STR	22'-5"	47
A215	2	#5	STR	19'-9"	41
A216	2	#5	STR	17'-1"	36
A217	2	#5	STR	14'-5"	30
A218	2	#5	STR	11'-9"	25
A219	2	#5	STR	9'-1"	19
A220	2	#5	STR	6'-5"	13
A221	2	#5	STR	3'-9"	8
A222	1	#5	STR	2'-5"	3
A223	2	#5	STR	57'-1"	119
A224	2	#5	STR	54'-6"	114
A225	2	#5	STR	51'-10"	108
A226	2	#5	STR	49'-3"	103
A227	2	#5	STR	46'-7"	97
A228	2	#5	STR	44'-0"	92
A229	2	#5	STR	41'-4"	86
A230	2	#5	STR	38'-9"	81
A231	2	#5	STR	36'-1"	75
A232	2	#5	STR	33'-6"	70
A233	2	#5	STR	30'-10'	64
A234	2	#5	STR	28'-3"	59
A235	2	#5	STR	25'-7"	53
A236	2	#5	STR	23'-0"	48
A237	2	#5	STR	20'-4"	42
A238	2	#5	STR	17'-9"	37
A239	2	#5	STR	15'-1"	31
A240	2	#5	STR	12'-6"	26
A241	2	#5	STR	9'-10"	21
A242	2	#5	STR	7'-3"	15
A243	2	#5	STR	4'-7'	10
A244	2	#5	STR	2'-0"	4
✱ B1	144	#4	STR	26'-5"	2541

BAR	NO.	SIZE	TYPE	LENGTH	WEIGHT
B2	102	#5	STR	49'-3"	5240
✱B3	96	#6	STR	40'-9"	5876
✱B4	47	#6	STR	34'-3"	2418
✱B5	144	#4	STR	27'-5"	2637
B6	51	#6	STR	34'-10"	2668
B7	102	#5	STR	51'-4"	5461
✱ G1	4	#5	STR	33'-9"	141
✱ J1	122	#4	9	1'-5"	115
✱ K1	8	#8	1	14'-9"	315
✱K2	16	#8	2	22'-10"	975
✱K3	10	#6	STR	10'-5"	156
✱K4	10	#6	STR	8'-2"	123
✱K5	10	#6	STR	7'-0"	105
K6	10	#4	STR	7'-4"	49
K7	50	#4	STR	9'-11"	331
K8	14	#4	6	6'-10"	64
K9	28	#4	7	13'-7"	254
K10	10	#4	STR	7'-0"	47
✱ S1	70	#5	3	5'-11"	432
✱ S2	40	#5	8	2'-11"	122
S3	20	#4	8	11'-2"	149
S4	30	#4	2	16'-5"	329
S5	260	#4	4	3'-2"	550
✱ U1	70	#4	5	5'-0"	234
U2	40	#5	5	9'-8"	403
REINFORCING STEEL				=	39,436 LBS.
✱ EPOXY COATED REINF. STEEL				=	39,966 LBS.

GROOVING BRIDGE FLOORS

BRIDGE DECK	12,015	SQ.FT.
APPROACH SLAB	2,564	SQ.FT.
TOTAL	14,579	SQ.FT.

BAR TYPES

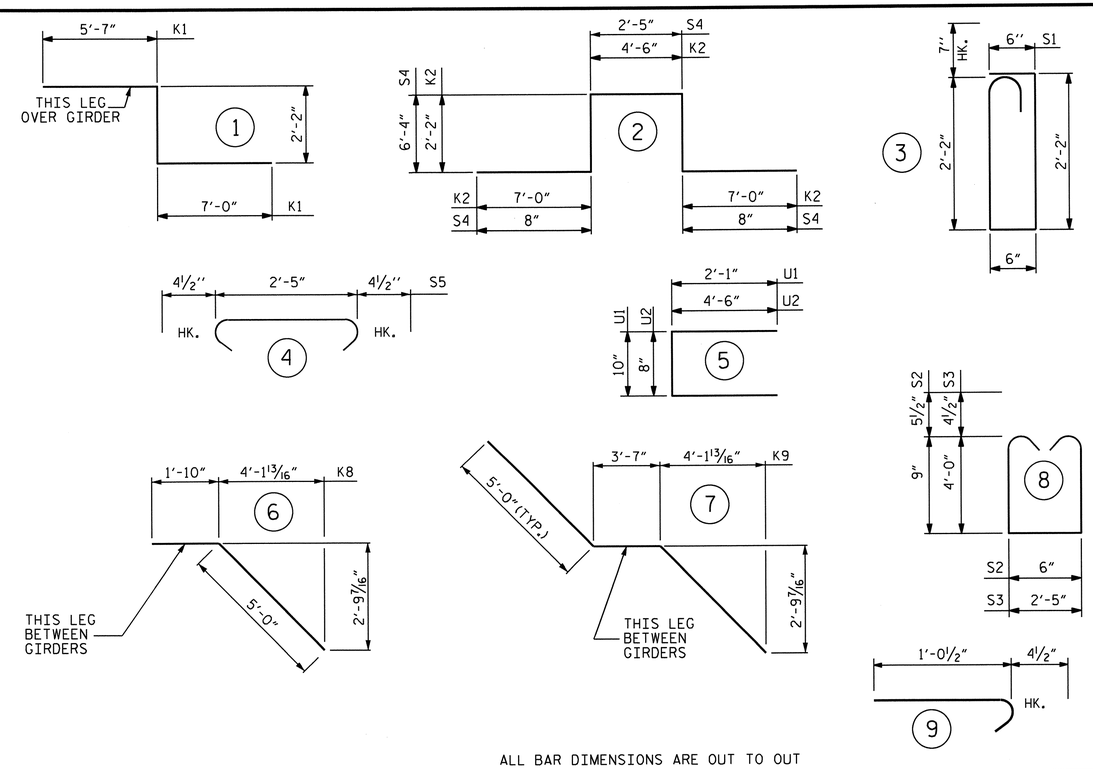

ALL BAR DIMENSIONS ARE OUT TO OUT

SUPERSTRUCTURE BILL OF MATERIAL

	CLASS AA CONCRETE		REINFORCING STEEL	EPOXY COATED REINFORCING STEEL
		(CU. YDS.)	(LBS.)	(LBS.)
SPANS A & B	POUR #1	207.2		
	POUR #2	283.8		
	POUR #3	27.3		
TOTALS✱✱		518.3	39,436	39,966

✱✱QUANTITIES FOR BARRIER RAIL ARE NOT INCLUDED

SUPERSTRUCTURE REINFORCING STEEL LENGTHS ARE BASED ON THE FOLLOWING MINIMUM SPLICE LENGTHS

BAR SIZE	SUPERSTRUCTURE EXCEPT APPROACH SLABS, PARAPET, AND BARRIER RAIL		APPROACH SLABS		PARAPET AND BARRIER RAIL
	EPOXY COATED	UNCOATED	EPOXY COATED	UNCOATED	
#4	2'-0"	1'-9"	2'-0"	1'-9"	2'-9"
#5	2'-6"	2'-2"	2'-6"	2'-2"	3'-5"
#6	3'-0"	2'-7"	3'-10"	2'-7"	4'-4"
#7	5'-3"	3'-6"			
#8	6'-10"	4'-7"			

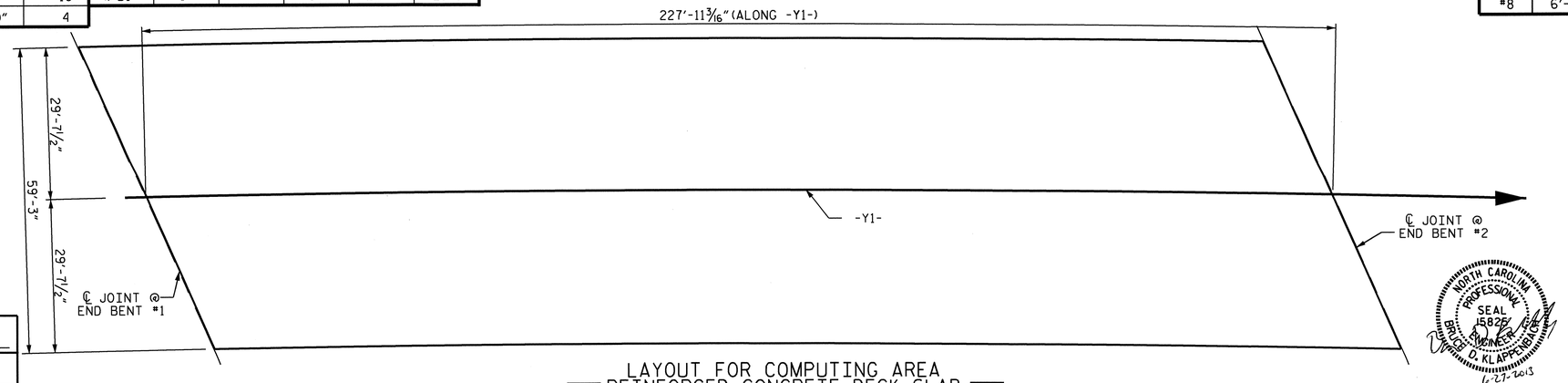

LAYOUT FOR COMPUTING AREA
REINFORCED CONCRETE DECK SLAB
(SQ. FT. = 13,504)

PROJECT NO. R-2707B
CLEVELAND COUNTY
STATION: 354+83.22-L-

SHEET 2 OF 2

STATE OF NORTH CAROLINA
DEPARTMENT OF TRANSPORTATION
RALEIGH

SUPERSTRUCTURE BILL OF MATERIAL

NORTH CAROLINA PROFESSIONAL SEAL 15826 ENGINEER BRUCE D. KLAPPENBACH
6-27-2013

DESIGN ENGINEER OF RECORD:		
-		DATE : -
ASSEMBLED BY :	H. T. BARBOUR	DATE : 7-11-12
CHECKED BY :	D. A. GLADDEN	DATE : 2-13
DRAWN BY : JMB 5/87	REV. 6/1/94	EEM/GRP
CHECKED BY : SJD 9/87	REV. 8/16/99	RWW/LES
	REV. 5/1/06	TLA/GM

REVISIONS						SHEET NO.
NO.	BY:	DATE:	NO.	BY:	DATE:	S-253
1			3			TOTAL SHEETS
2			4			266

20-JUN-2013 12:20
K:\Structures\Plans\Bailey\Str7\TBARBOUR\Microstation\R2707B_SD_TS.dgn
tbarbour

STR. #7

STD. NO. BOM2

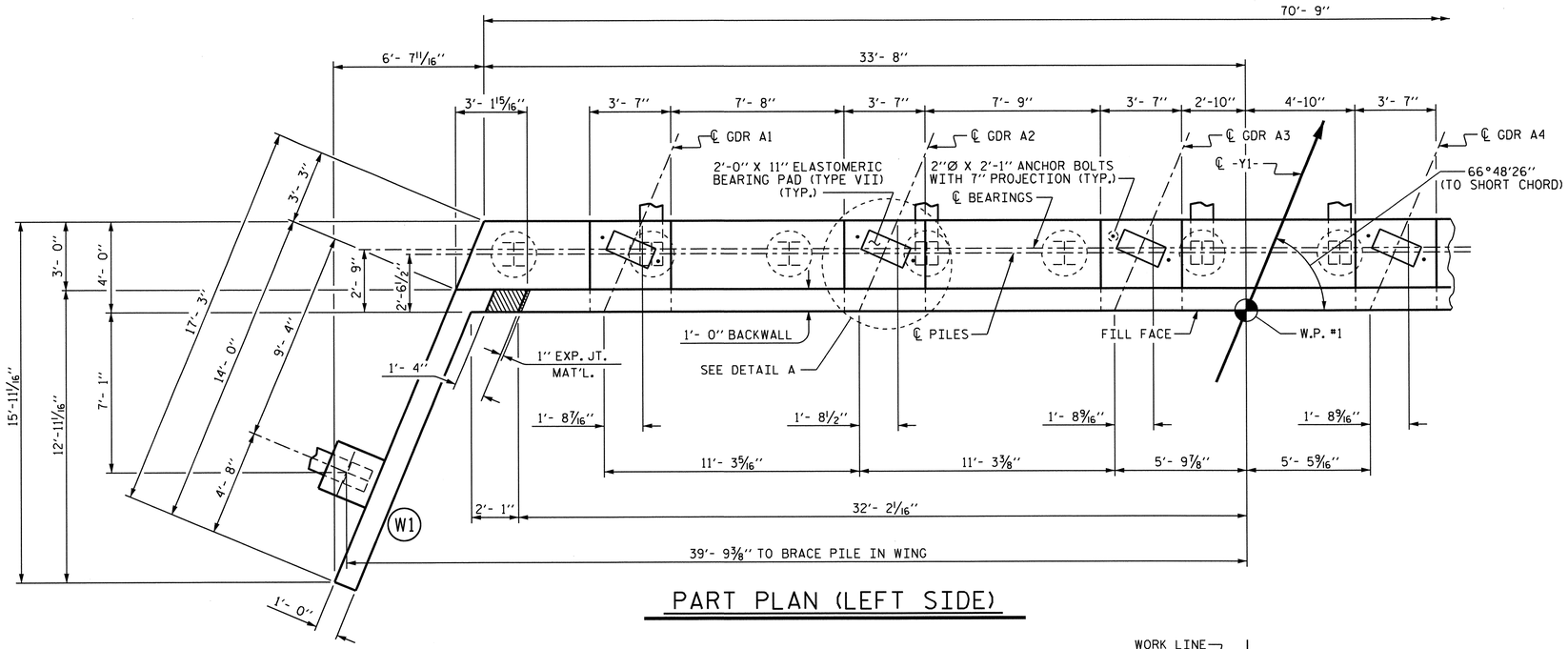

PART PLAN (LEFT SIDE)

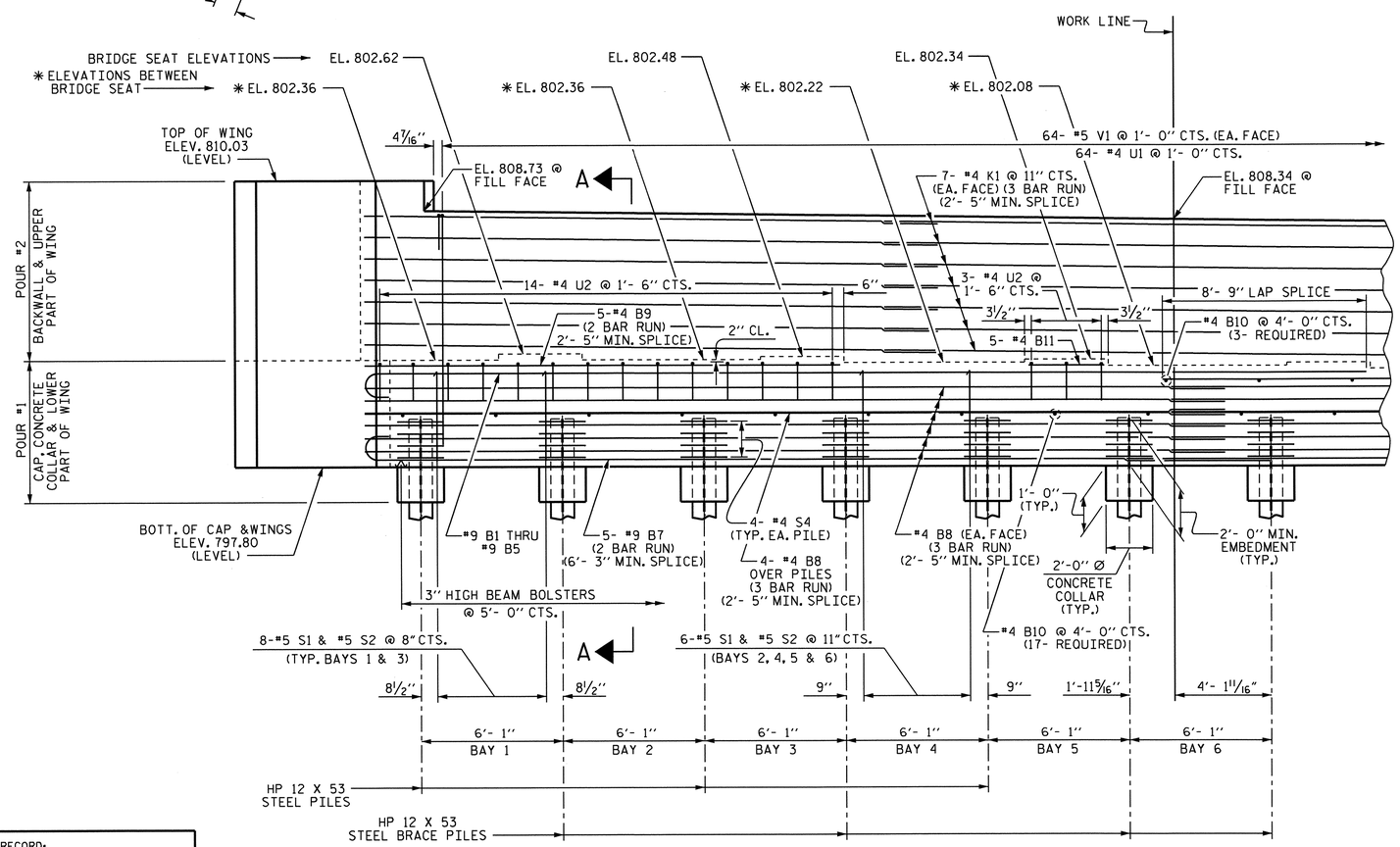

PART ELEVATION (LEFT SIDE)

NOTES

STIRRUPS IN CAP MAY BE SHIFTED AS NECESSARY TO CLEAR ANCHOR BOLTS.

BACKWALL SHALL BE PLACED BEFORE APPLYING THE EPOXY PROTECTIVE COATING.

THE TOP SURFACE AREAS OF THE END BENT CAP SHALL BE CURED IN ACCORDANCE WITH THE STANDARD SPECIFICATIONS EXCEPT THE MEMBRANE CURING COMPOUND METHOD SHALL NOT BE USED.

THE CONCRETE IN THE SHADED AREA OF THE WING SHALL BE POURED AFTER THE BARRIER RAIL ARE CAST IF SLIP FORMING IS USED.

THE TOP SURFACE OF THE CAP, EXCEPT THE BRIDGE SEAT BUILDUPS, SHALL BE SLOPED TRANSVERSELY FROM THE FILL FACE TO THE BACK FACE AT THE RATE OF 2%.

INSTALL THE 4" DIA. DRAIN PIPE THROUGH THE WING WALL AS REQUIRED FOR REINFORCED BRIDGE APPROACH FILLS. SEE ROADWAY PLANS. REINFORCING STEEL IN THE WING WALL MAY BE SHIFTED AS NECESSARY TO CLEAR THE DRAIN PIPE.

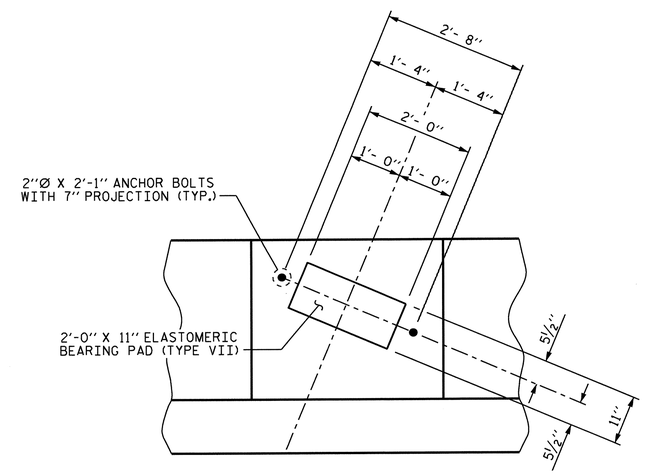

DETAIL A

PROJECT NO. R-2707B

CLEVELAND COUNTY

STATION: 354+83.22 -L-

SHEET 1 OF 4

STATE OF NORTH CAROLINA
DEPARTMENT OF TRANSPORTATION
RALEIGH

SUBSTRUCTURE
END BENT #1

NORTH CAROLINA PROFESSIONAL SEAL 15825 ENGINEER BRIAN D. KLAPPENBACH
6-27-2013

REVISIONS						SHEET NO.
NO.	BY:	DATE:	NO.	BY:	DATE:	S-254
1			3			TOTAL SHEETS
2			4			266

DESIGN ENGINEER OF RECORD: S.T. CHAMPION DATE: 5-14-13
DRAWN BY: D. A. GLADDEN DATE: 9-18-12
CHECKED BY: H. T. BARBOUR DATE: 2/13

24-JUN-2013 17:35
R:\Structures\Plans\Bailey\Str7\dgladden\Microstation\R2707B_SD_EBT.dgn
dgladden

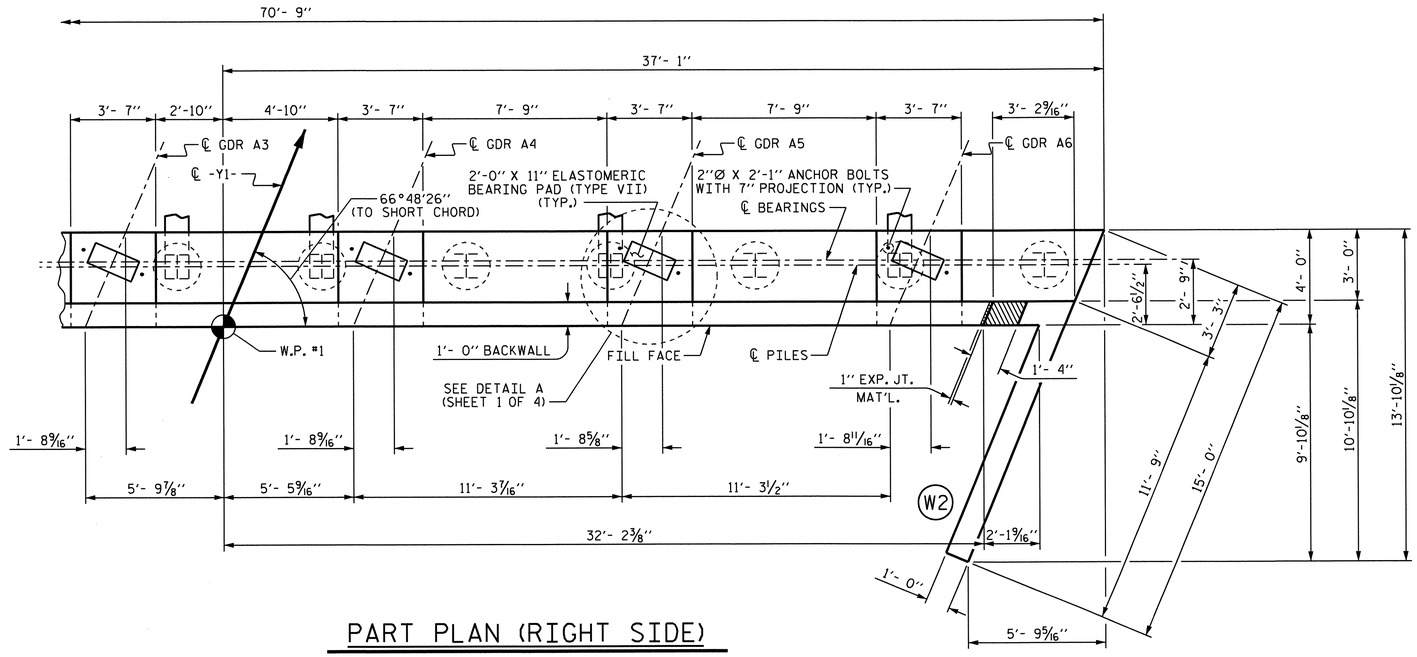

PART PLAN (RIGHT SIDE)

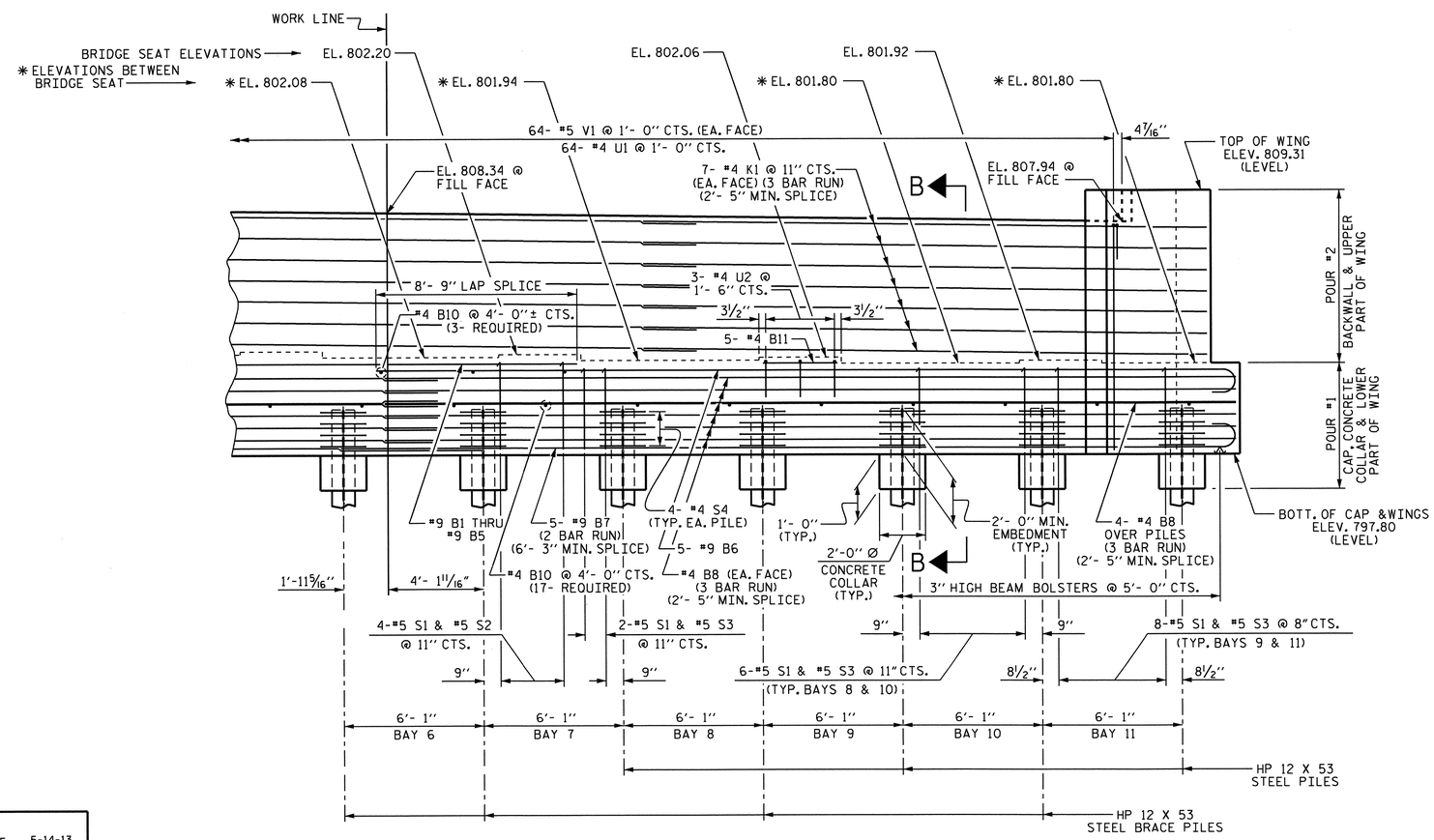

PART ELEVATION (RIGHT SIDE)

PROJECT NO. R-2707B

CLEVELAND COUNTY

STATION: 354+83.22 -L-

SHEET 2 OF 4

STATE OF NORTH CAROLINA
DEPARTMENT OF TRANSPORTATION
RALEIGH

SUBSTRUCTURE
END BENT #1

NORTH CAROLINA PROFESSIONAL SEAL 15825 ENGINEER BRUCE D. KLAPPENBACH
6-27-2013

REVISIONS						SHEET NO.
NO.	BY:	DATE:	NO.	BY:	DATE:	S-255
1			3			TOTAL SHEETS
2			4			266

DESIGN ENGINEER OF RECORD: S.T. CHAMPION DATE: 5-14-13
DRAWN BY: D. A. GLADDEN DATE: 9-18-12
CHECKED BY: H. T. BARBOUR DATE: 2/13

24-JUN-2013 17:35
R:\Structures\Plans\Bailey\Str7\dgladden\Microstation\R2707B_SD_EBT.dgn
dgladden

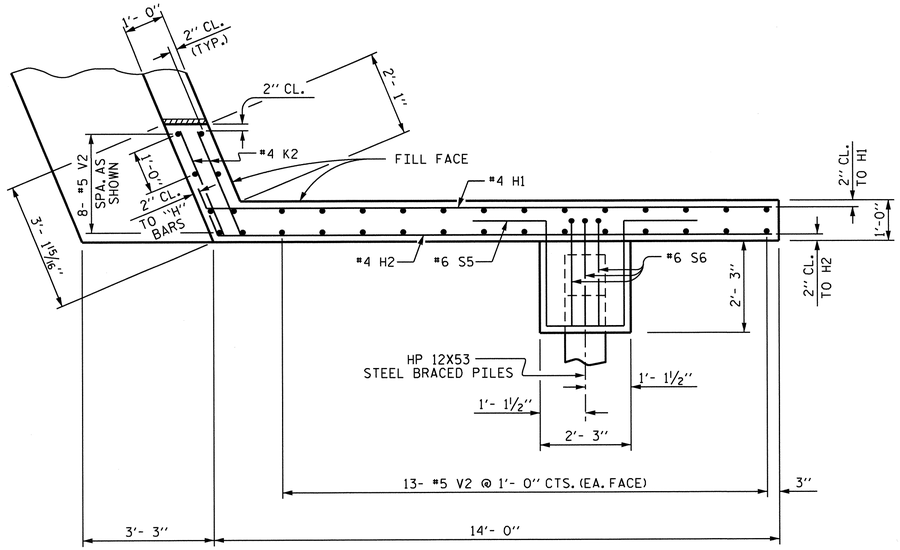

PLAN OF LEFT WING (W1)

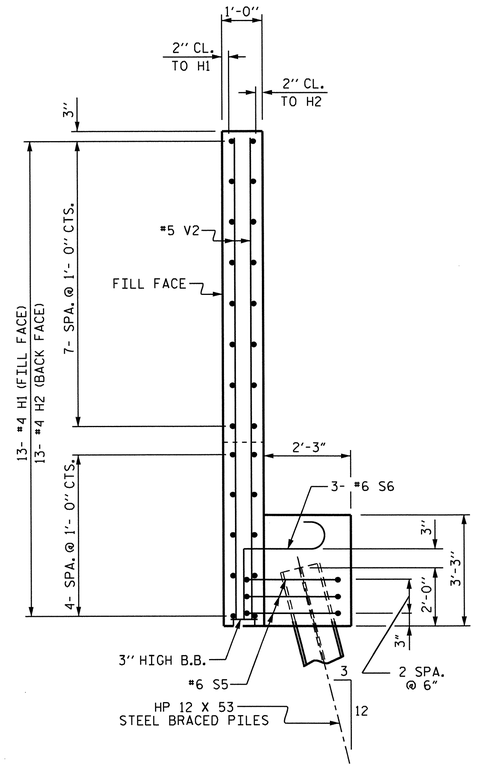

SECTION X-X

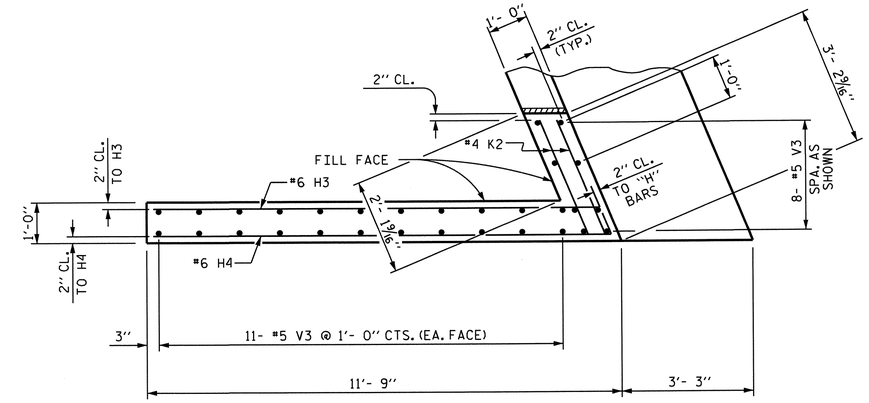

PLAN OF RIGHT WING (W2)

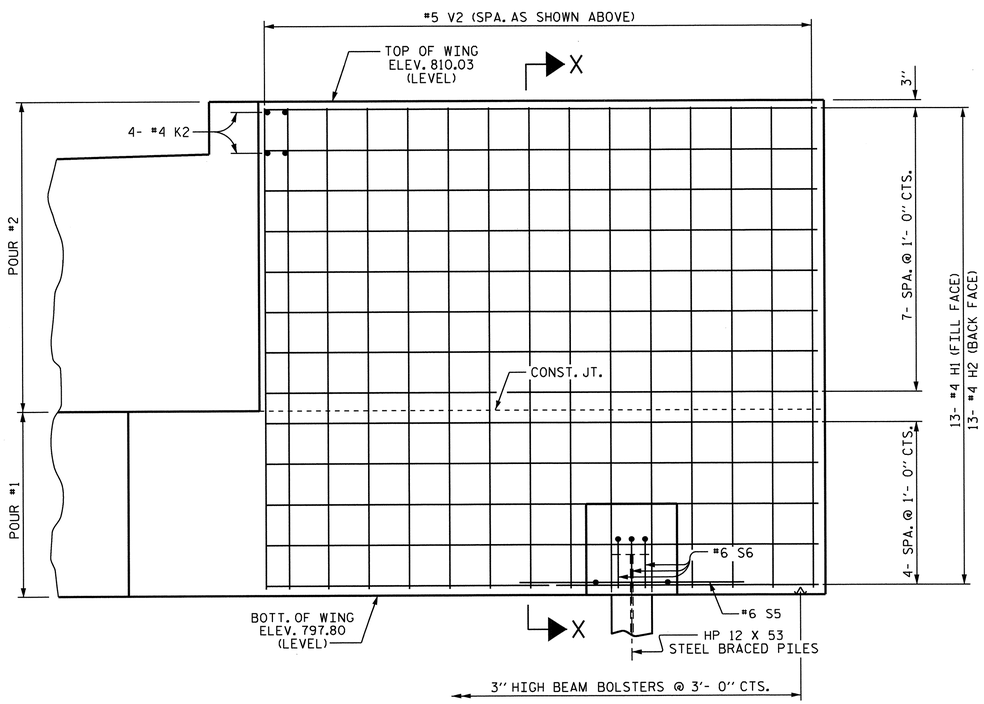

ELEVATION OF LEFT WING (W1)

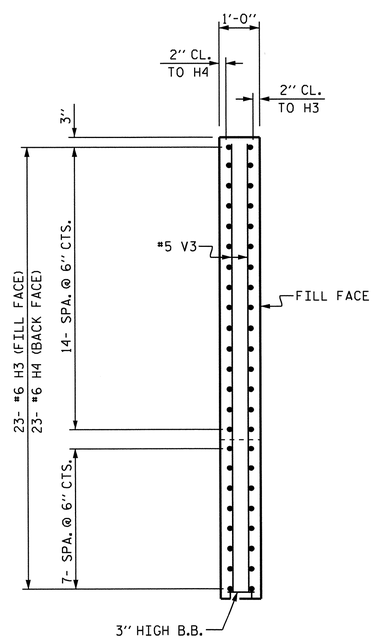

SECTION Y-Y

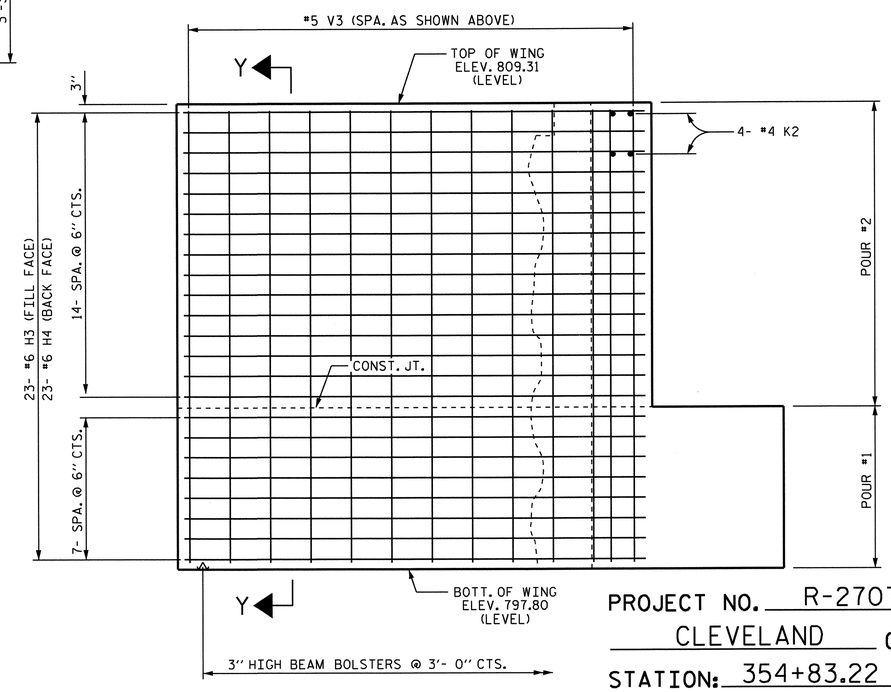

ELEVATION OF RIGHT WING (W2)

PROJECT NO. R-2707B

CLEVELAND COUNTY

STATION: 354+83.22 -L-

SHEET 3 OF 4

STATE OF NORTH CAROLINA
DEPARTMENT OF TRANSPORTATION
RALEIGH

SUBSTRUCTURE
END BENT #1

NORTH CAROLINA PROFESSIONAL SEAL 15828 ENGINEER BRIAN L. KLAPPENBACH
6-27-2013

REVISIONS						SHEET NO.
NO.	BY:	DATE:	NO.	BY:	DATE:	S-256
1			3			TOTAL SHEETS
2			4			266

DESIGN ENGINEER OF RECORD: S.T. CHAMPION DATE: 5-14-13
DRAWN BY: D. A. GLADDEN DATE: 9-18-12
CHECKED BY: H. T. BARBOUR DATE: 2/13

24-JUN-2013 17:36
R:\Structures\Plans\Bailey\Str7\dgladden\Microstation\R2707B_SD_EBT.dgn
dgladden

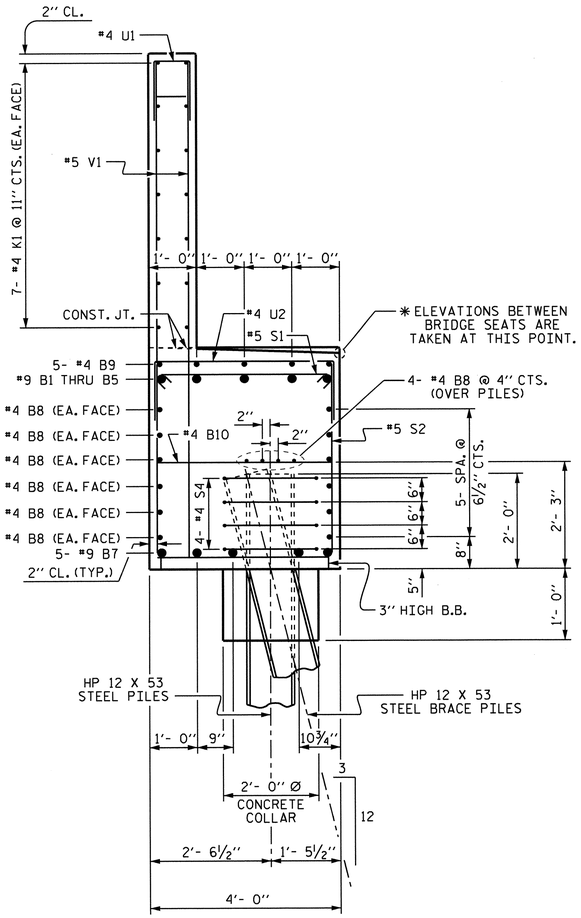

SECTION A-A

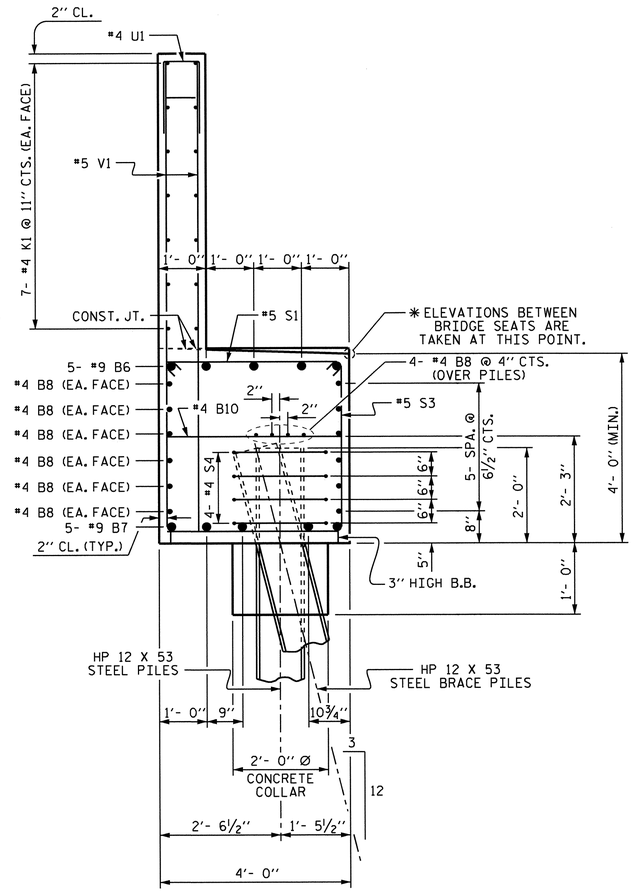

SECTION B-B

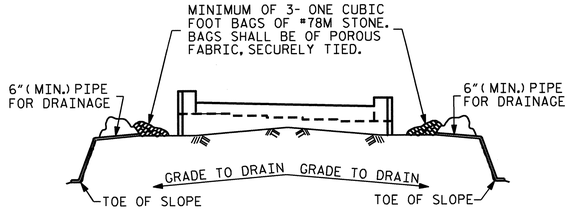

BAGGED STONE AND PIPE SHALL BE PLACED IMMEDIATELY AFTER COMPLETION OF END BENT EXCAVATION. PIPE MAY BE EITHER CONCRETE, CORRUGATED STEEL, CORRUGATED ALUMINUM ALLOY, OR CORRUGATED PLASTIC. PERFORATED PIPE WILL NOT BE ALLOWED.

BAGGED STONE SHALL REMAIN IN PLACE UNTIL THE ENGINEER DIRECTS THAT IT BE REMOVED. THE CONTRACTOR SHALL REMOVE AND DISPOSE OF SILT ACCUMULATIONS AT BAGGED STONE WHEN SO DIRECTED BY THE ENGINEER. BAGS SHALL BE REMOVED AND REPLACED WHENEVER THE ENGINEER DETERMINES THAT THEY HAVE DETERIORATED AND LOST THEIR EFFECTIVENESS.

NO SEPARATE PAYMENT WILL BE MADE FOR THIS WORK AND THE ENTIRE COST OF THIS WORK SHALL BE INCLUDED IN THE UNIT CONTRACT PRICE BID FOR THE SEVERAL PAY ITEMS.

TEMPORARY DRAINAGE AT END BENT

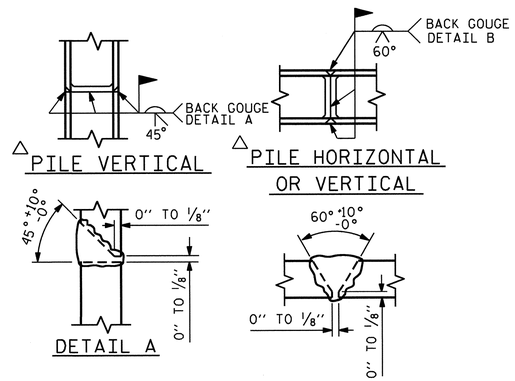

△ PILE VERTICAL

△ PILE HORIZONTAL OR VERTICAL

DETAIL A

DETAIL B

△ POSITION OF PILE DURING WELDING.

PILE SPLICE DETAILS

BAR TYPES

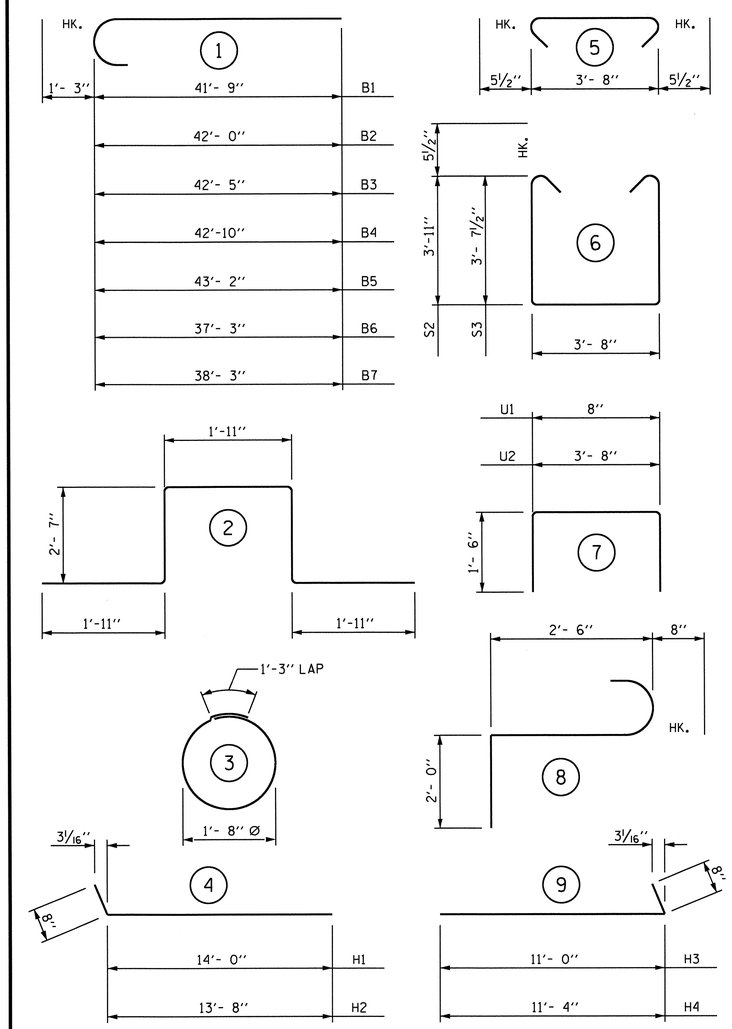

ALL BAR DIMENSIONS ARE OUT TO OUT.

BILL OF MATERIAL

BAR	NO.	SIZE	TYPE	LENGTH	WEIGHT
B1	1	#9	1	43'- 0"	146
B2	1	#9	1	43'- 3"	147
B3	1	#9	1	43'- 8"	148
B4	1	#9	1	44'- 1"	150
B5	1	#9	1	44'- 5"	151
B6	5	#9	1	38'- 6"	655
B7	10	#9	1	39'- 6"	1343
B8	48	#4	STR	25'- 1"	804
B9	10	#4	STR	11'- 7"	77
B10	20	#4	STR	3'- 8"	49
B11	10	#4	STR	3'- 3"	22
H1	13	#4	4	14'- 8"	127
H2	13	#4	4	14'- 4"	124
H3	23	#6	9	11'- 8"	403
H4	23	#6	9	12'- 0"	415
K1	42	#4	STR	25'- 1"	704
K2	8	#4	STR	2'- 9"	15
S1	74	#5	5	4'- 7"	354
S2	44	#5	6	12'- 5"	570
S3	30	#5	6	11'-10"	370
S4	48	#4	3	6'- 6"	208
S5	3	#6	2	10'-11"	49
S6	3	#6	8	5'- 2"	23
U1	64	#4	7	3'- 8"	157
U2	20	#4	7	6'- 8"	89
V1	128	#5	STR	9'- 9"	1302
V2	34	#5	STR	11'-10"	420
V3	30	#5	STR	11'- 2"	349

REINFORCING STEEL = 9371 LBS

CLASS "A" CONCRETE BREAKDOWN

POUR #1 = (CAP, LOWER PART OF WINGS & CONCRETE COLLARS) = 51.3 C.Y.

POUR #2 = (BACKWALL & TOP PART OF WINGS) = 23.2 C.Y.

TOTAL CLASS "A" CONCRETE = 74.5 C.Y.

HP 12 X 53 STEEL PILES

NO. 13 LIN. FT. 325

PROJECT NO. R-2707B

CLEVELAND COUNTY

STATION: 354+83.22 -L-

SHEET 4 OF 4

STATE OF NORTH CAROLINA
DEPARTMENT OF TRANSPORTATION
RALEIGH

SUBSTRUCTURE
END BENT #1

NORTH CAROLINA PROFESSIONAL SEAL 15825 ENGINEER D. KLAPPENBACH
6-27-2013

REVISIONS							SHEET NO.
NO.	BY:	DATE:	NO.	BY:	DATE:		S-257
1			3				TOTAL SHEETS
2			4				266

DRAWN BY : D. A. GLADDEN DATE : 9-18-12
CHECKED BY : H. T. BARBOUR DATE : 2/13

DESIGN ENGINEER OF RECORD: S.T. CHAMPION DATE : 5-14-13

14-MAY-2013 16:10
R:\Structures\Plans\Bailey\Str7\dgladden\Microstation\R2707B_SD_EBT.dgn
bklappenbach

NOTES

STIRRUPS IN CAP MAY BE SHIFTED AS NECESSARY TO CLEAR ANCHOR BOLTS.

HOOKS ON "V" BARS MAY BE TURNED AS NECESSARY FOR PLACING REINFORCING STEEL.

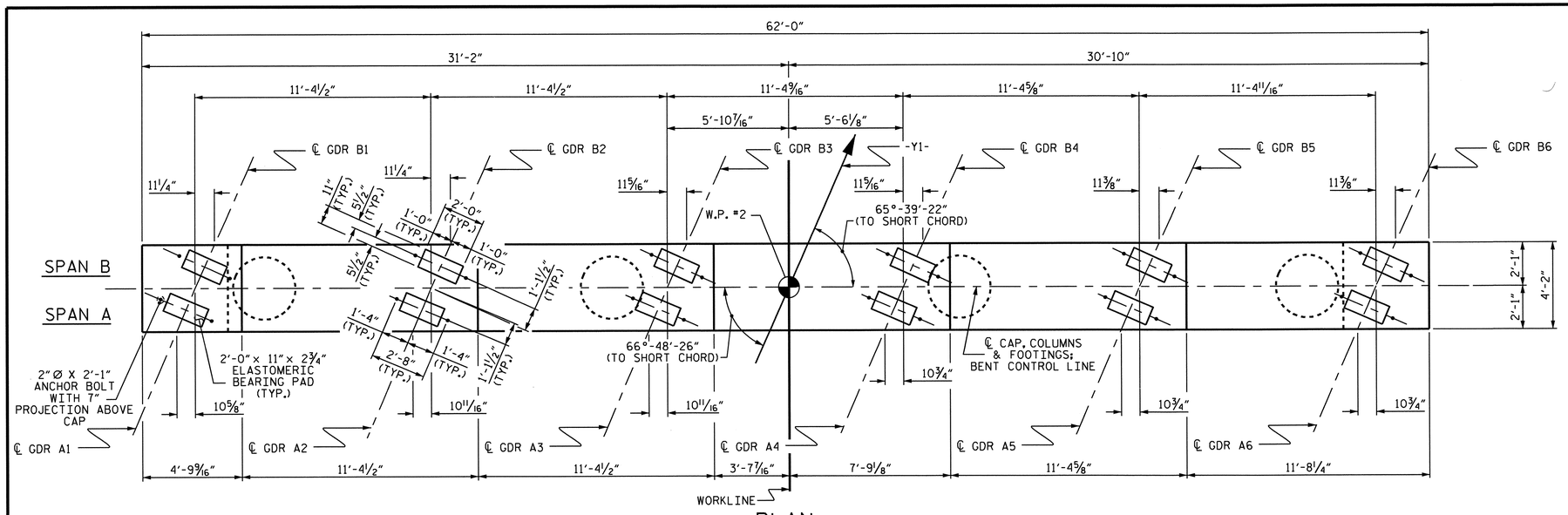

PLAN

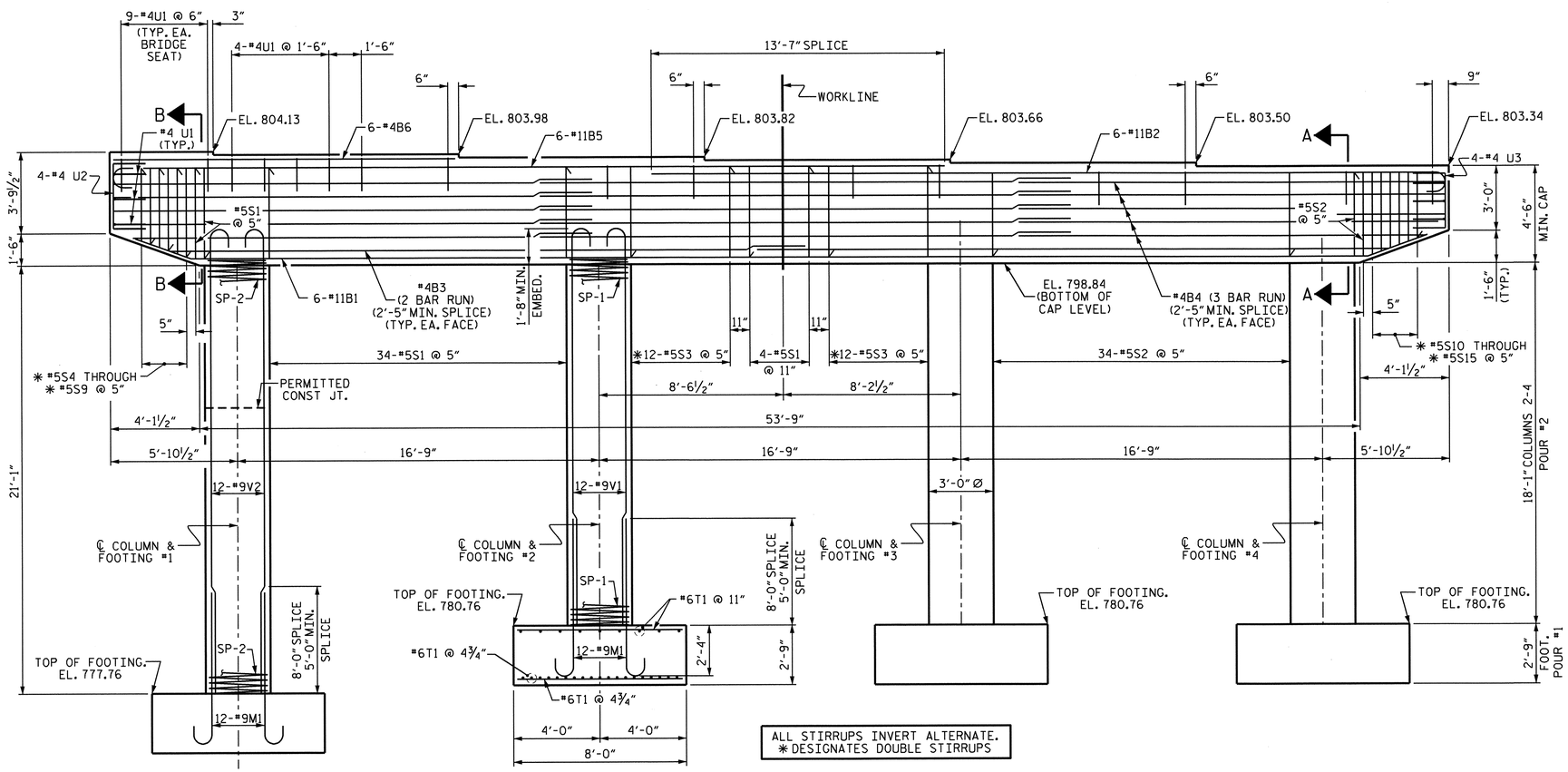

ALL STIRRUPS INVERT ALTERNATE.
* DESIGNATES DOUBLE STIRRUPS

ELEVATION

COLUMNS 2, 3, AND 4 ARE IDENTICAL
FOOTINGS ARE IDENTICAL

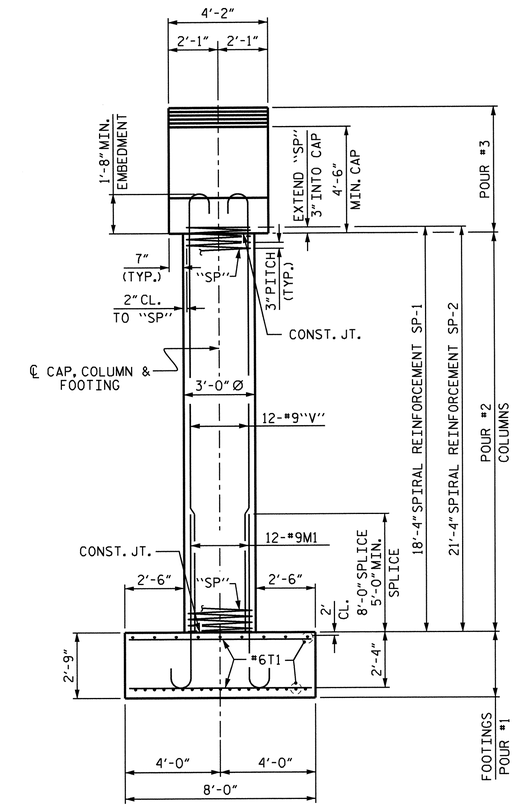

END ELEVATION

PROJECT NO. R-2707B
CLEVELAND COUNTY
STATION: 354+83.22-L-

SHEET 1 OF 2

STATE OF NORTH CAROLINA
DEPARTMENT OF TRANSPORTATION
RALEIGH

SUBSTRUCTURE BENT #1

NORTH CAROLINA PROFESSIONAL SEAL 15826 ENGINEER BRUCE D. KLAPPENBACH 6-27-2013

REVISIONS						SHEET NO.
NO.	BY:	DATE:	NO.	BY:	DATE:	S-258
1			3			TOTAL SHEETS
2			4			266

STR. #7

DRAWN BY : H. T. BARBOUR DATE : 3-26-13
CHECKED BY : M. A. LEBLANC DATE : 4-13
DESIGN ENGINEER OF RECORD: S. T. CHAMPION DATE : 5-13

24-JUN-2013 12:27
K:\Structures\Plans\Bailey\Str7\TBARBOUR\Microstation\R-2707B_SD_B*.dgn
tbarbour

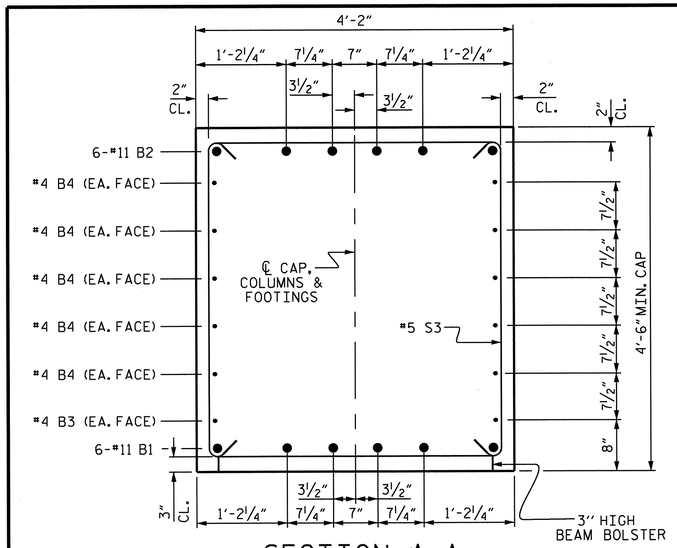

SECTION A-A

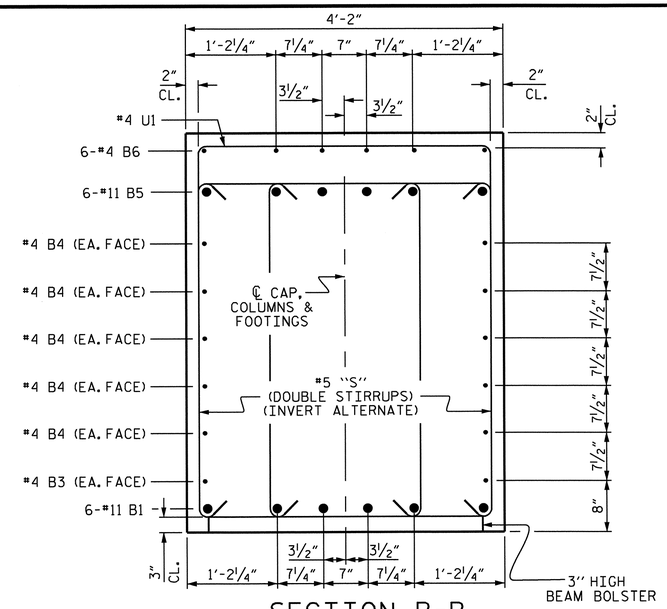

SECTION B-B

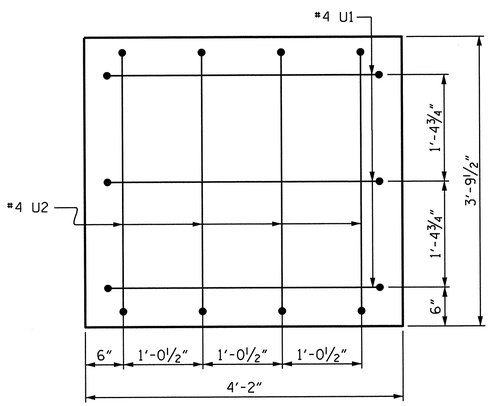

LEFT END OF CAP DETAIL

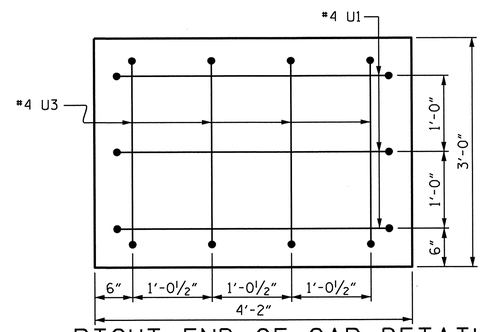

RIGHT END OF CAP DETAIL

BAR TYPES

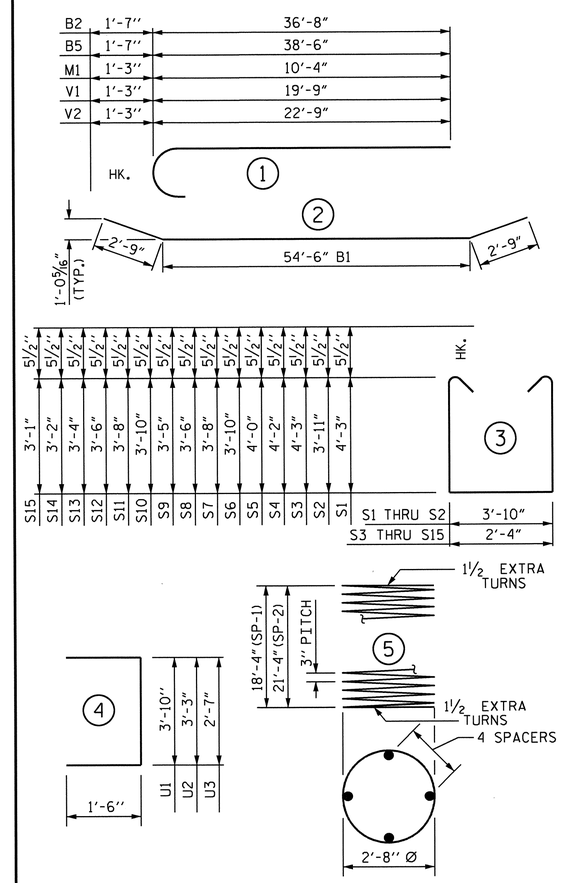

ALL BAR DIMENSIONS ARE OUT TO OUT.

BILL OF MATERIAL

BAR	NO.	SIZE	TYPE	LENGTH	WEIGHT
B1	6	#11	2	60'-0"	1913
B2	6	#11	1	38'-3"	1219
B3	4	#4	STR	29'-5"	79
B4	30	#4	STR	22'-2"	444
B5	6	#11	1	40'-1"	1278
B6	6	#4	STR	15'-10"	63
M1	48	#9	1	11'-7"	1890
S1	40	#5	3	13'-3"	553
S2	36	#5	3	12'-7"	472
S3	26	#5	3	11'-9"	319
S4	2	#5	3	11'-7"	24
S5	2	#5	3	11'-3"	23
S6	2	#5	3	10'-11"	23
S7	2	#5	3	10'-7"	22
S8	2	#5	3	10'-3"	21
S9	2	#5	3	10'-1"	21
S10	2	#5	3	10'-11"	23
S11	2	#5	3	10'-7"	22
S12	2	#5	3	10'-3"	21
S13	2	#5	3	9'-11"	21
S14	2	#5	3	9'-7"	20
S15	2	#5	3	9'-5"	20
T1	224	#6	STR	7'-8"	2579
U1	58	#4	4	6'-10"	265
U2	4	#4	4	6'-3"	17
U3	4	#4	4	5'-7"	15
V1	36	#9	1	21'-0"	2570
V2	12	#9	1	24'-0"	979
REINFORCING STEEL					14916 LBS.
SP-1	3	*	5	629'-11"	1262
SP-2	1	*	5	728'-9"	487
SPIRAL COLUMN REINFORCING STEEL					1749 LBS.

CLASS A CONCRETE BREAKDOWN

POUR #1 (FOOTINGS)	26.1 C.Y.
POUR #2 (COLUMNS)	19.7 C.Y.
POUR #3 (CAP)	45.5 C.Y.
TOTAL	91.3 C.Y.

* THE SP-1 AND SP-2 SPIRAL REINFORCING STEEL SHALL BE W20 OR D-20 COLD DRAWN WIRE OR #4 PLAIN OR DEFORMED BAR.

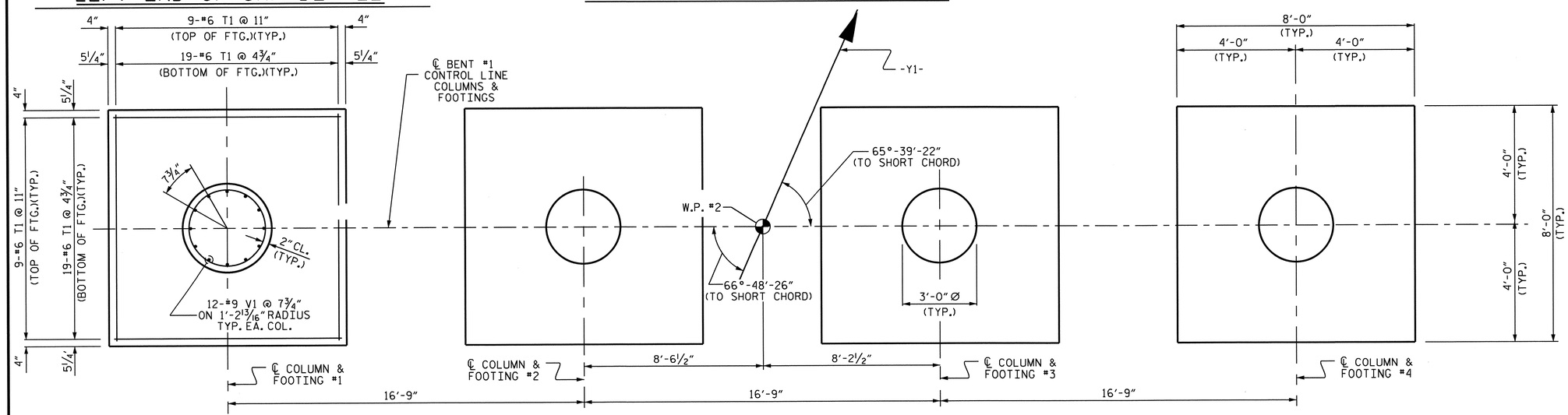

PLAN OF COLUMNS AND FOOTINGS

FOOTING DETAILS ARE TYPICAL

NORTH CAROLINA PROFESSIONAL SEAL 15825 ENGINEER BRUCE D. KLAPPENBACH 6-27-2013

PROJECT NO. R-2707B

CLEVELAND COUNTY

STATION: 354+83.22-L-

SHEET 2 OF 2

STATE OF NORTH CAROLINA
DEPARTMENT OF TRANSPORTATION
RALEIGH

SUBSTRUCTURE BENT #1

REVISIONS						SHEET NO.
NO.	BY:	DATE:	NO.	BY:	DATE:	S-259
1			3			TOTAL SHEETS
2			4			266

DRAWN BY : H. T. BARBOUR DATE : 3-26-13
CHECKED BY : M. A. LEBLANC DATE : 4-13

DESIGN ENGINEER OF RECORD: S. T. CHAMPION DATE : 5-13

24-JUN-2013 12:27
K:\Structures\Plans\Bailey\Str7\TBARBOUR\Microstation\R-2707B_SD_B*.dgn
tbarbour

STR #7

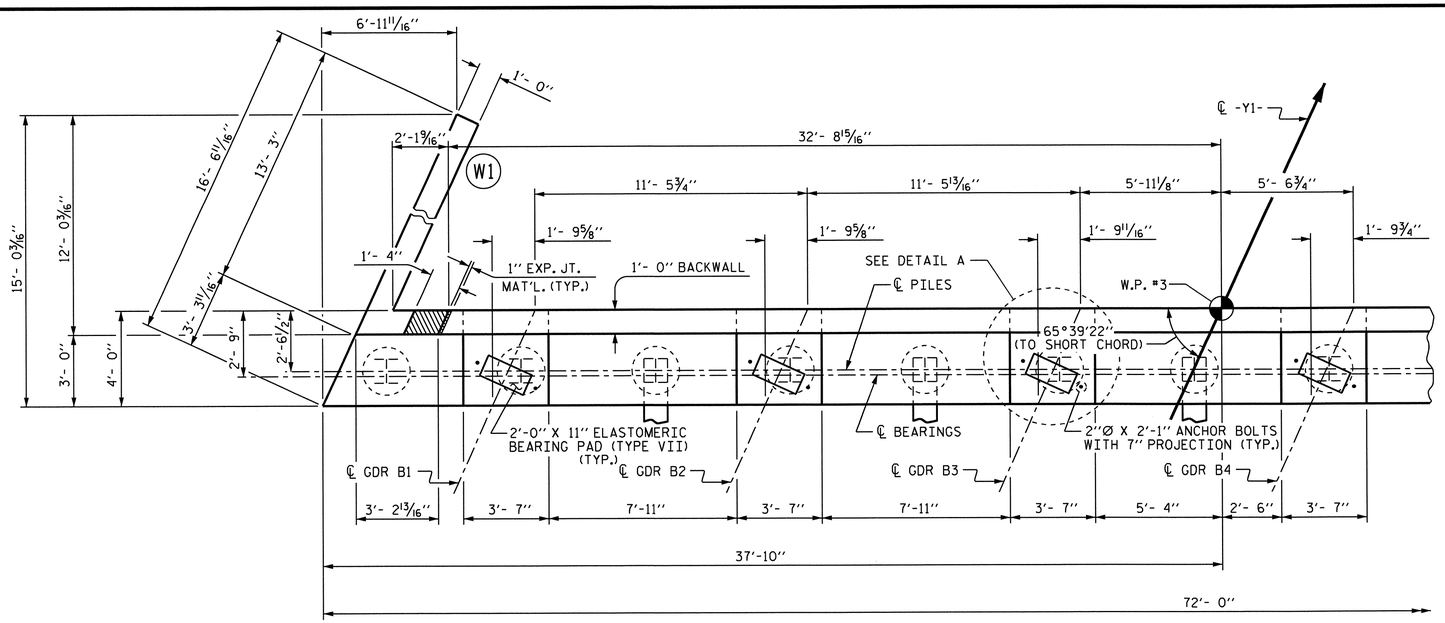

PART PLAN (LEFT SIDE)

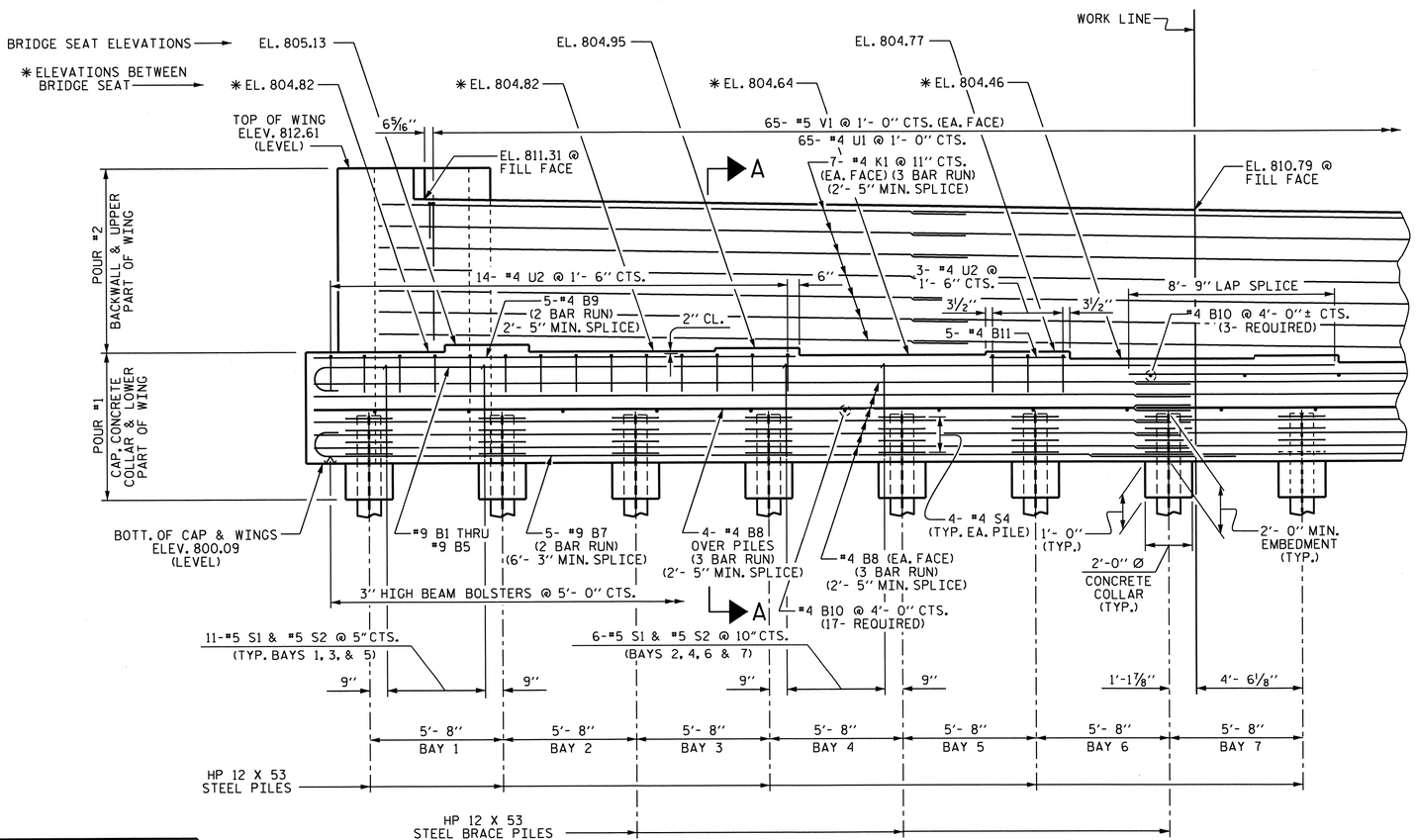

PART ELEVATION (LEFT SIDE)

NOTES

STIRRUPS IN CAP MAY BE SHIFTED AS NECESSARY TO CLEAR ANCHOR BOLTS.

BACKWALL SHALL BE PLACED BEFORE APPLYING THE EPOXY PROTECTIVE COATING.

THE TOP SURFACE AREAS OF THE END BENT CAP SHALL BE CURED IN ACCORDANCE WITH THE STANDARD SPECIFICATIONS EXCEPT THE MEMBRANE CURING COMPOUND METHOD SHALL NOT BE USED.

THE CONCRETE IN THE SHADED AREA OF THE WING SHALL BE POURED AFTER THE BARRIER RAIL ARE CAST IF SLIP FORMING IS USED.

THE TOP SURFACE OF THE CAP, EXCEPT THE BRIDGE SEAT BUILDUPS, SHALL BE SLOPED TRANSVERSELY FROM THE FILL FACE TO THE BACK FACE AT THE RATE OF 2%.

INSTALL THE 4" DIA. DRAIN PIPE THROUGH THE WING WALL AS REQUIRED FOR REINFORCED BRIDGE APPROACH FILLS. SEE ROADWAY PLANS. REINFORCING STEEL IN THE WING WALL MAY BE SHIFTED AS NECESSARY TO CLEAR THE DRAIN PIPE.

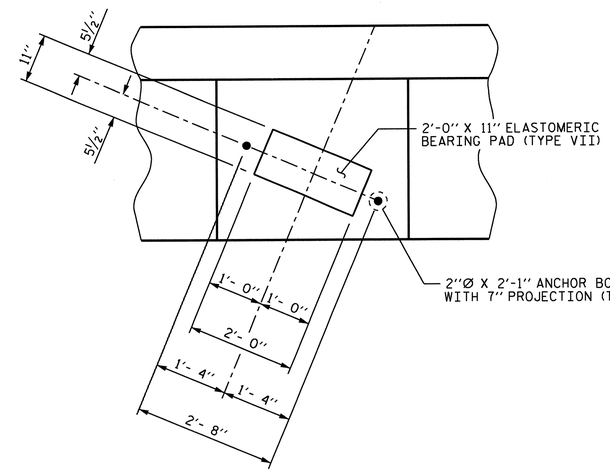

DETAIL A

PROJECT NO. R-2707B

CLEVELAND COUNTY

STATION: 354+83.22 -L-

SHEET 1 OF 4

STATE OF NORTH CAROLINA
DEPARTMENT OF TRANSPORTATION
RALEIGH

SUBSTRUCTURE
END BENT #2

NORTH CAROLINA PROFESSIONAL SEAL 15825 ENGINEER RICHARD D. KLAPPENBACH
6-27-2013

REVISIONS						SHEET NO.
NO.	BY:	DATE:	NO.	BY:	DATE:	S-260
1			3			TOTAL SHEETS
2			4			266

DESIGN ENGINEER OF RECORD: S.T. CHAMPION DATE: 5-14-13
DRAWN BY: D. A. GLADDEN DATE: 9-18-12
CHECKED BY: H. T. BARBOUR DATE: 2/13

24-JUN-2013 17:36
R:\Structures\Plans\Bailey\StrT\dgladden\Microstation\R2707B_SD_EBT.dgn
dgladden

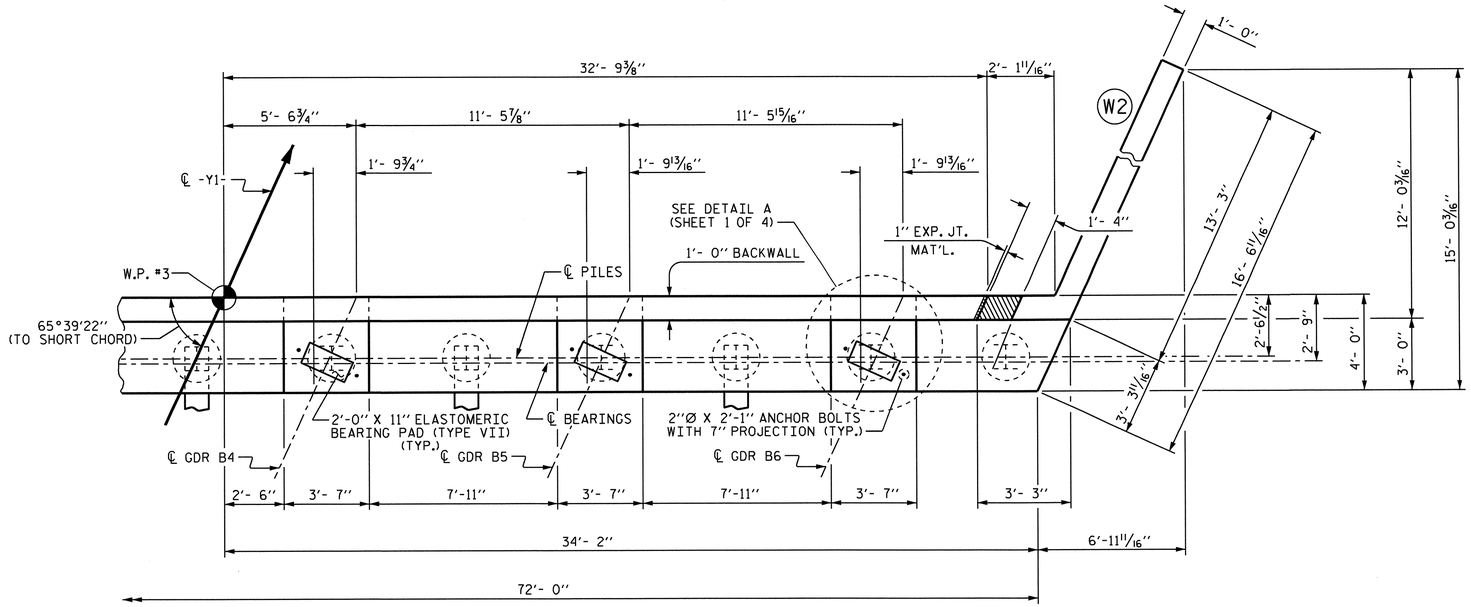

PART PLAN (RIGHT SIDE)

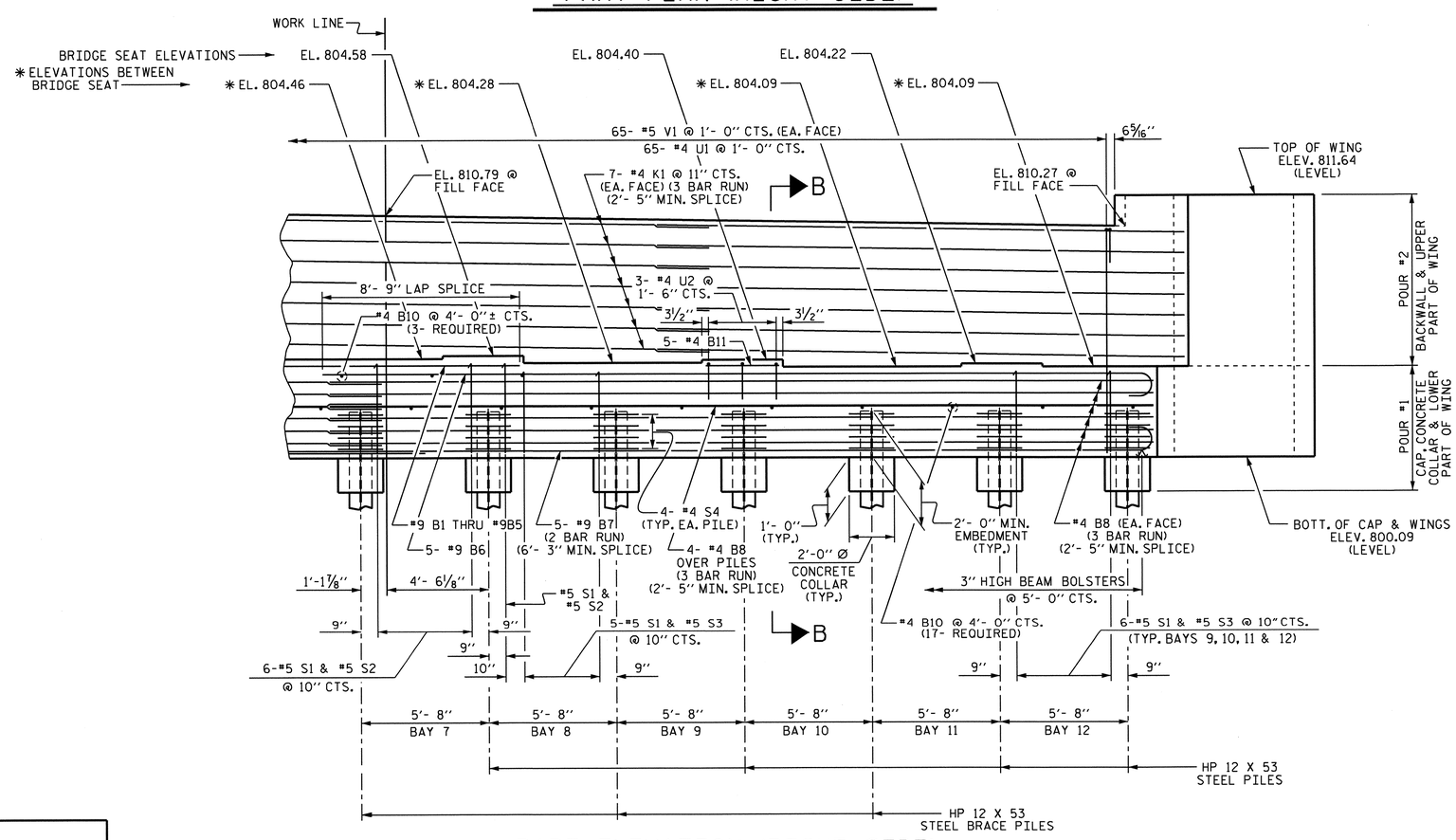

PART ELEVATION (RIGHT SIDE)

PROJECT NO. R-2707B

CLEVELAND COUNTY

STATION: 354+83.22 -L-

SHEET 2 OF 4

STATE OF NORTH CAROLINA
DEPARTMENT OF TRANSPORTATION
RALEIGH

SUBSTRUCTURE
END BENT #2

NORTH CAROLINA PROFESSIONAL SEAL 15825 ENGINEER BRUCE D. KLAPPENBACH
6-27-2013

REVISIONS						SHEET NO.
NO.	BY:	DATE:	NO.	BY:	DATE:	S-261
1			3			TOTAL SHEETS
2			4			266

DESIGN ENGINEER OF RECORD: S.T. CHAMPION DATE: 5-14-13
DRAWN BY: D. A. GLADDEN DATE: 9-18-12
CHECKED BY: H. T. BARBOUR DATE: 2/13

25-JUN-2013 14:45
R:\Structures\Plans\Bailey\Str7\dgladden\Microstation\R2707B_SD_EBT.dgn
dgladden

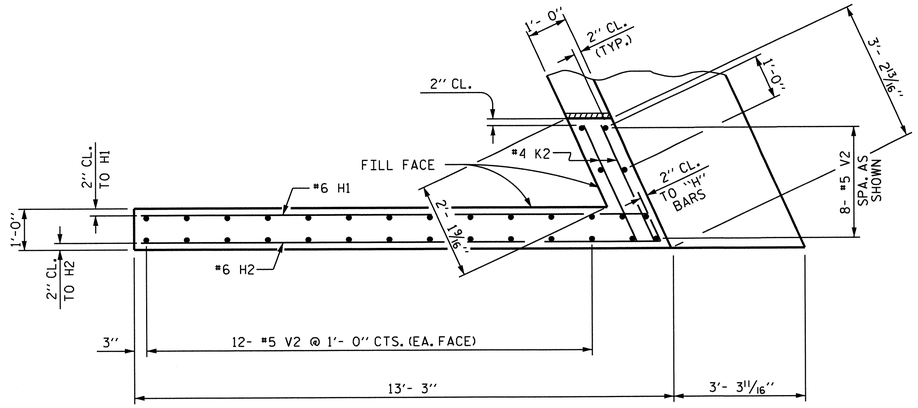

PLAN OF LEFT WING (W1)

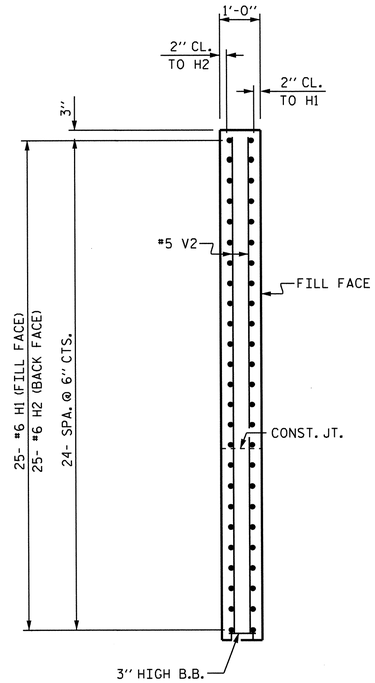

SECTION X-X

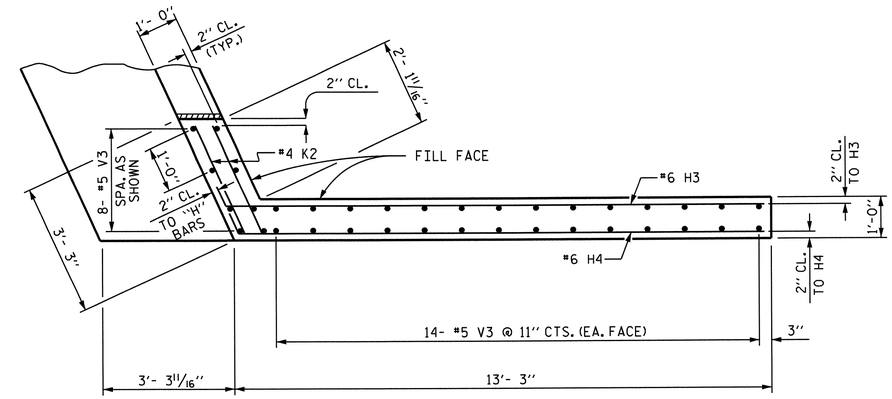

PLAN OF RIGHT WING (W2)

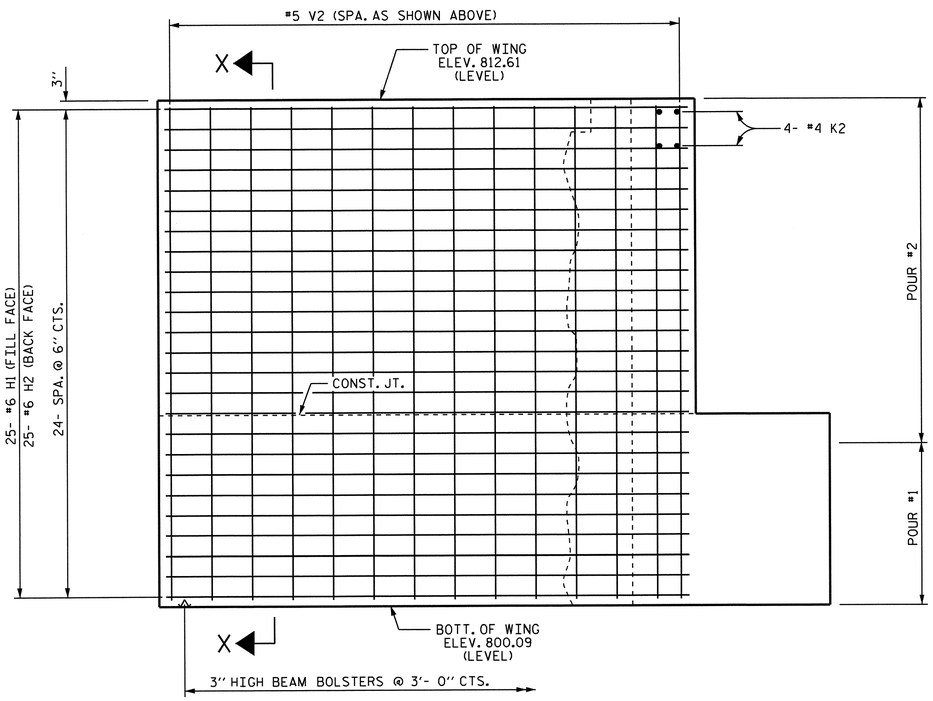

ELEVATION OF LEFT WING (W1)

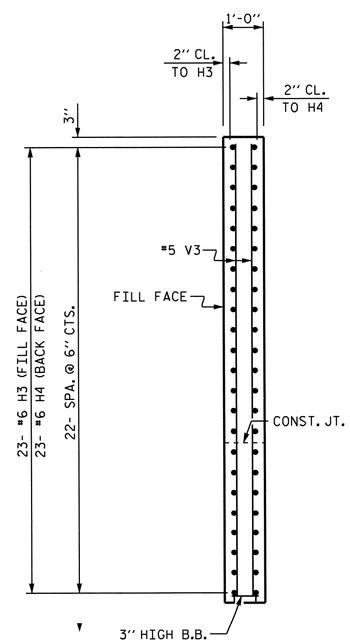

SECTION Y-Y

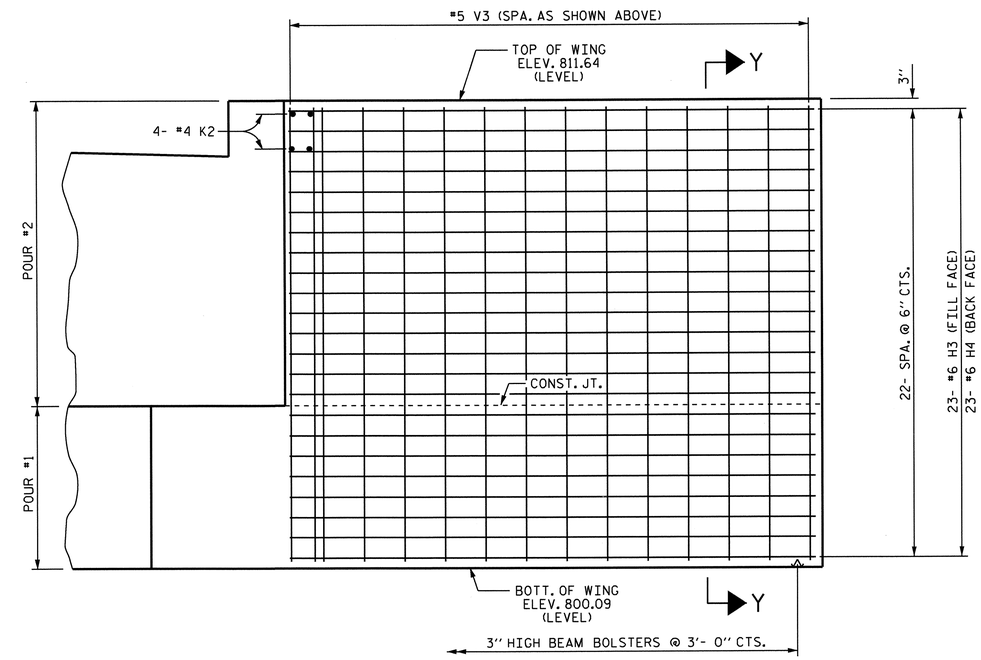

ELEVATION OF RIGHT WING (W2)

PROJECT NO. R-2707B
CLEVELAND COUNTY
STATION: 354+83.22 -L-

SHEET 3 OF 4

STATE OF NORTH CAROLINA
DEPARTMENT OF TRANSPORTATION
RALEIGH

SUBSTRUCTURE
END BENT #2

NORTH CAROLINA PROFESSIONAL SEAL 19825 ENGINEER BRIAN D. KLAPPENBACH 6-27-2013

REVISIONS						SHEET NO.
NO.	BY:	DATE:	NO.	BY:	DATE:	S-262
1			3			TOTAL SHEETS
2			4			266

DESIGN ENGINEER OF RECORD: S.T. CHAMPION DATE: 5-14-13
DRAWN BY: D. A. GLADDEN DATE: 9-18-12
CHECKED BY: H. T. BARBOUR DATE: 2/13

14-MAY-2013 15:10
R:\Structures\Plans\Bailey\Str7\dgladden\Microstation\R2707B_SD_EBT.dgn
bklappenbach

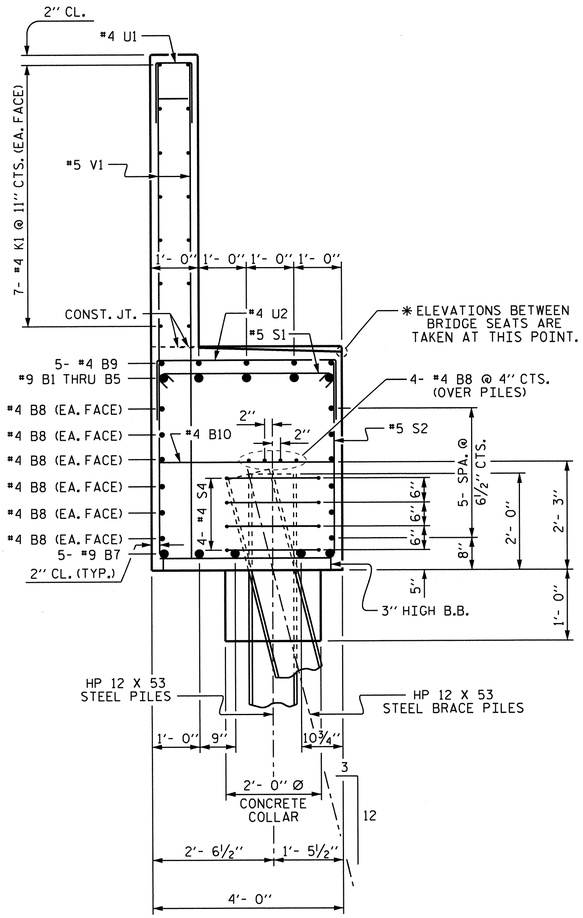

SECTION A-A

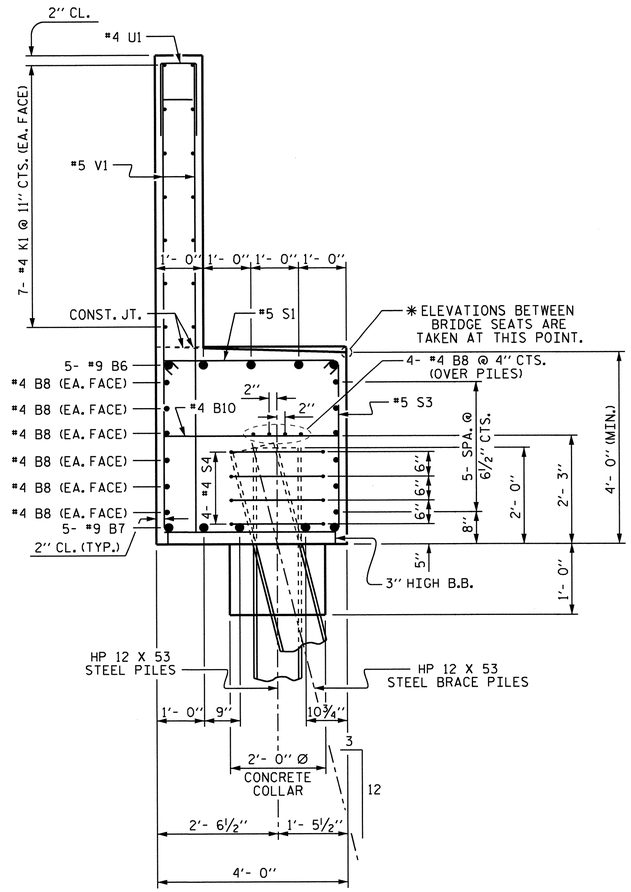

SECTION B-B

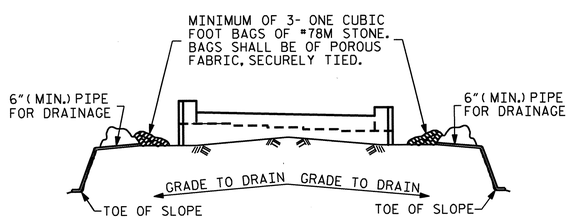

BAGGED STONE AND PIPE SHALL BE PLACED IMMEDIATELY AFTER COMPLETION OF END BENT EXCAVATION. PIPE MAY BE EITHER CONCRETE, CORRUGATED STEEL, CORRUGATED ALUMINUM ALLOY, OR CORRUGATED PLASTIC. PERFORATED PIPE WILL NOT BE ALLOWED.

BAGGED STONE SHALL REMAIN IN PLACE UNTIL THE ENGINEER DIRECTS THAT IT BE REMOVED. THE CONTRACTOR SHALL REMOVE AND DISPOSE OF SILT ACCUMULATIONS AT BAGGED STONE WHEN SO DIRECTED BY THE ENGINEER. BAGS SHALL BE REMOVED AND REPLACED WHENEVER THE ENGINEER DETERMINES THAT THEY HAVE DETERIORATED AND LOST THEIR EFFECTIVENESS.

NO SEPARATE PAYMENT WILL BE MADE FOR THIS WORK AND THE ENTIRE COST OF THIS WORK SHALL BE INCLUDED IN THE UNIT CONTRACT PRICE BID FOR THE SEVERAL PAY ITEMS.

TEMPORARY DRAINAGE AT END BENT

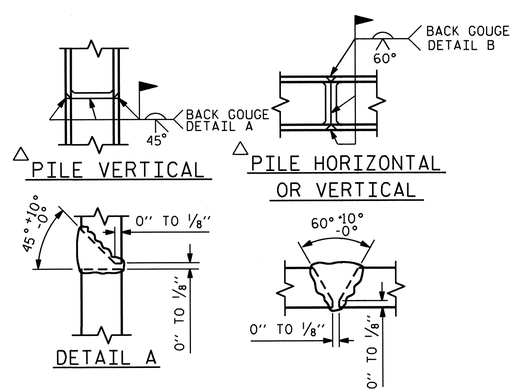

△ POSITION OF PILE DURING WELDING.

PILE SPLICE DETAILS

BAR TYPES

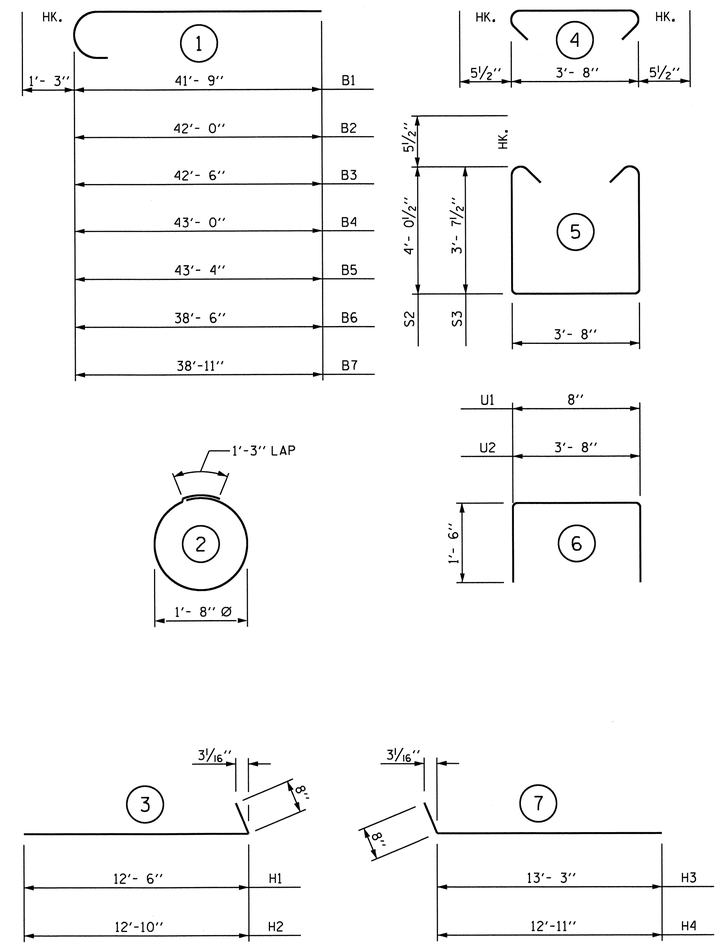

ALL BAR DIMENSIONS ARE OUT TO OUT.

BILL OF MATERIAL

BAR	NO.	SIZE	TYPE	LENGTH	WEIGHT
B1	1	#9	1	43'- 0"	146
B2	1	#9	1	43'- 3"	147
B3	1	#9	1	43'- 9"	149
B4	1	#9	1	44'- 3"	150
B5	1	#9	1	44'- 7"	152
B6	5	#9	1	39'- 9"	676
B7	10	#9	1	40'- 2"	1366
B8	48	#4	STR	25'- 6"	818
B9	10	#4	STR	11'- 6"	77
B10	20	#4	STR	3'- 8"	49
H1	25	#6	3	13'- 2"	494
H2	25	#6	3	13'- 6"	507
H3	23	#6	7	13'-11"	481
H4	23	#6	7	13'- 7"	469
K1	42	#4	STR	25'- 6"	715
K2	8	#4	STR	2'-10"	15
S1	74	#5	4	4'- 7"	354
S2	58	#5	5	12'- 8"	766
S3	29	#5	5	11'-10"	358
S4	52	#4	2	6'- 6"	226
U1	65	#4	6	3'- 8"	159
U2	20	#4	6	6'- 8"	89
V1	130	#5	STR	9'- 9"	1322
V2	32	#5	STR	12'- 2"	406
V3	36	#5	STR	11'- 2"	419

REINFORCING STEEL = 10510 LBS

CLASS "A" CONCRETE BREAKDOWN

POUR #1 = (CAP, LOWER PART OF WINGS & CONCRETE COLLARS) = 52.6 C.Y.

POUR #2 = (BACKWALL & TOP PART OF WINGS) = 24.0 C.Y.

TOTAL CLASS "A" CONCRETE = 76.6 C.Y.

HP 12 X 53 STEEL PILES

NO. 13 LIN. FT. 195

PROJECT NO. R-2707B

CLEVELAND COUNTY

STATION: 354+83.22 -L-

SHEET 4 OF 4

STATE OF NORTH CAROLINA
DEPARTMENT OF TRANSPORTATION
RALEIGH

SUBSTRUCTURE
END BENT #2

NORTH CAROLINA PROFESSIONAL SEAL 15825 ENGINEER BRUCE D. KLAPPENBACH
6-27-2013

REVISIONS							SHEET NO.
NO.	BY:	DATE:	NO.	BY:	DATE:		S-263
1			3				TOTAL SHEETS
2			4				266

DRAWN BY : D. A. GLADDEN DATE : 9-18-12
CHECKED BY : H. T. BARBOUR DATE : 2/13

DESIGN ENGINEER OF RECORD: S.T. CHAMPION DATE : 5-14-13

14-MAY-2013 15:10
R:\Structures\Plans\Bailey\Str7\dgladden\Microstation\R2707B_SD_EBT.dgn
bklappenbach

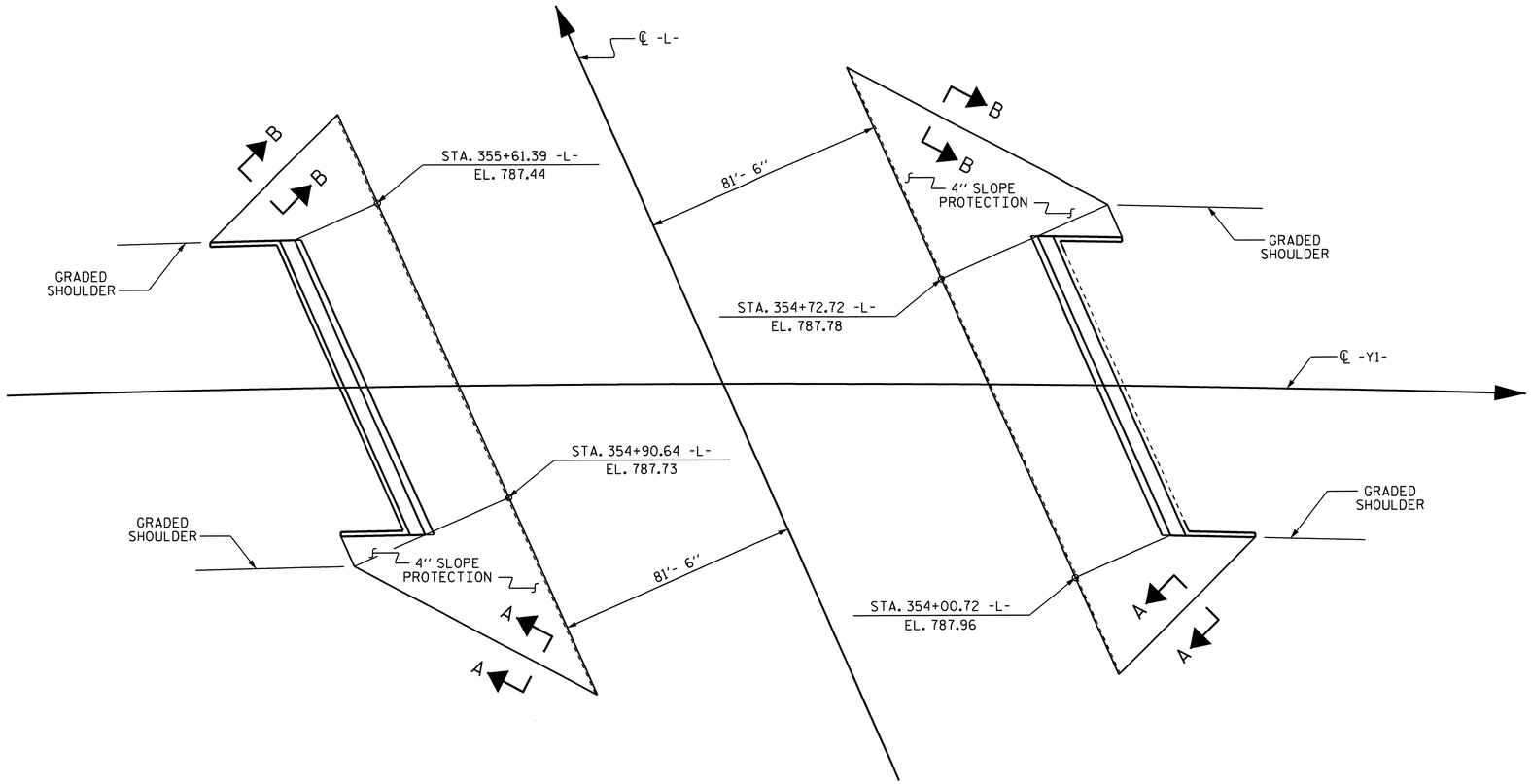

SLOPE PROTECTION @ END BENT #1

SLOPE PROTECTION @ END BENT #2

GENERAL NOTES

SLOPE PROTECTION SHALL BE PLACED UNDER THE ENDS OF THE BRIDGE AS SHOWN IN THE DETAILS. THE CONTRACTOR, AT HIS OPTION, MAY USE ALTERNATE "B" ONLY FOR HIGHWAY OVER HIGHWAY GRADE SEPARATIONS WITH 2:1 END BENT SLOPE IN RURAL, UNPOPULATED AREAS. STRAIGHT EDGING WILL NOT BE REQUIRED UNLESS, IN THE OPINION OF THE ENGINEER, VISUAL INSPECTION INDICATES A NEED FOR IT. MEASUREMENT AND PAYMENT SHALL BE AS PRESCRIBED IN SECTION 462 OF THE STANDARD SPECIFICATIONS. FOR BERM WIDTH, SEE GENERAL DRAWING.

ALTERNATE "A"

ALTERNATE "A" SHALL CONSIST OF 4" POURED-IN-PLACE CONCRETE PAVING AS SHOWN IN THE DETAILS ON THIS SHEET. CONCRETE SHALL BE CLASS "B". THE CONCRETE SURFACE SHALL BE FLOATED WITH A WOODEN FLOAT AND FINISHED. WELDED WIRE FABRIC REINFORCING SHALL BE 6 X 6 - W1.4 X W1.4, 60" WIDE. SLOPE PROTECTION SHALL BE POURED IN 5' STRIPS AS SHOWN IN THE "POURING DETAIL" WITH 2'-0" LONG #4 BARS PLACED ALONG THE SLOPE BETWEEN STRIPS AT 1'-6" MAXIMUM SPACING. SLOPE PROTECTION MAY BE POURED IN ALTERNATE 4' AND 5' STRIPS AS SHOWN IN THE "OPTIONAL POURING DETAIL" WITH ADJACENT RUNS OF WELDED WIRE FABRIC LAPPING AT LEAST 6". THE COST OF THE WELDED WIRE FABRIC AND #4 BARS, IF USED, SHALL BE INCLUDED IN THE CONTRACT UNIT PRICE BID PER SQUARE YARD FOR SLOPE PROTECTION.

BRIDGE @ STA. 354+83.22 -L-	4 INCH SLOPE PROTECTION	* WELDED WIRE FABRIC 60 INCHES WIDE
	SQUARE YARDS	APPROX. L.F.
END BENT 1	476	952
END BENT 2	544	1086
TOTAL	1020	2040

* QUANTITY SHOWN IS BASED ON 5' POURS.

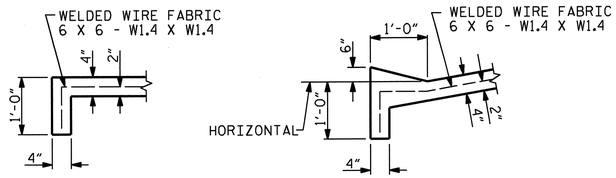

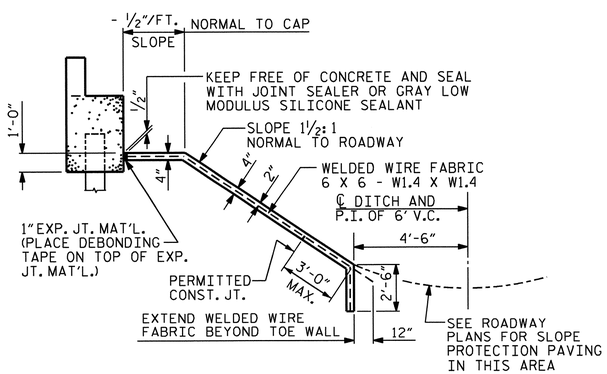

SECTION ALONG ℄ ROADWAY WHEN FILL CATCHES IN DITCH

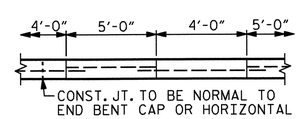

POUR A 4'-0" STRIP FIRST. STRIP WIDTHS MAY VARY IN CURVED PORTION.

OPTIONAL POURING DETAIL

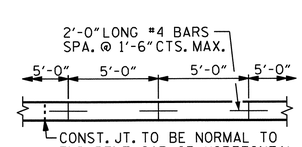

STRIP WIDTHS MAY VARY IN CURVED PORTION.

POURING DETAIL

PROJECT NO. R-2707B
CLEVELAND COUNTY
STATION: 354+83.22 -L-

STATE OF NORTH CAROLINA
DEPARTMENT OF TRANSPORTATION
RALEIGH

SLOPE PROTECTION DETAILS

NORTH CAROLINA PROFESSIONAL SEAL 16825 ENGINEER BRIAN D. KLAPPENBACH
6-27-2013

DETAILS FOR ALTERNATE "A"

ASSEMBLED BY : D. A. GLADDEN	DATE : 10-11-12
CHECKED BY : H. T. BARBOUR	DATE : 5-9-13
DRAWN BY : ELR 5/92	REV. 5/1/06 TLA/GM
CHECKED BY : GRP 6/92	REV. 10/1/11 MAA/GM
	REV. 12/21/11 MAA/GM

REVISIONS							SHEET NO.
NO.	BY:	DATE:	NO.	BY:	DATE:		S-264
1			3				TOTAL SHEETS
2			4				266

STR. #7

24-JUN-2013 17:43
R:\Structures\Plans\Bailey\Str7\dgladden\Microstation\R2707B_SD_sp.dgn
dgladden

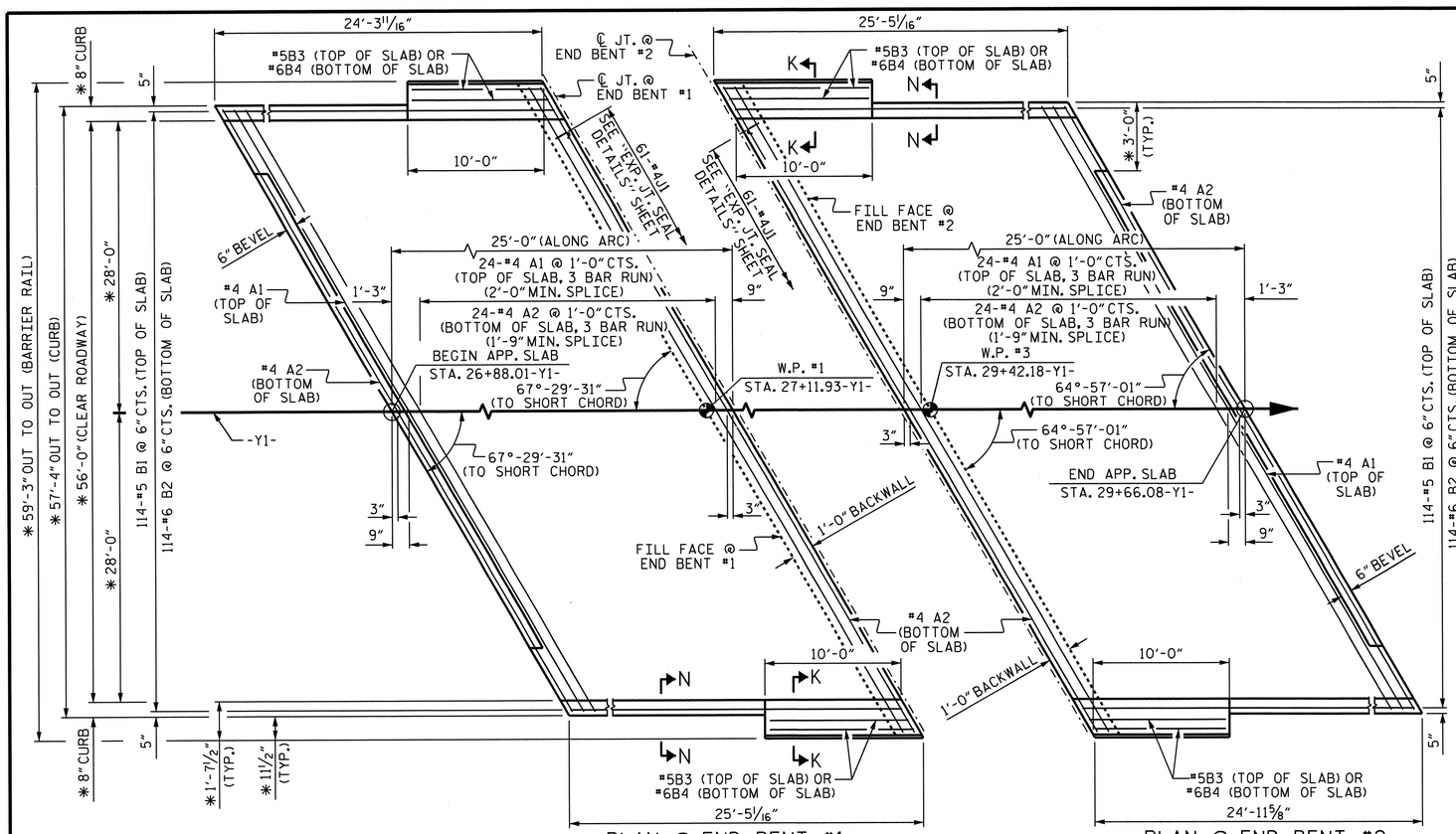

PLAN @ END BENT #1

PLAN @ END BENT #2

DIMENSIONS SHOWN ARE TYPICAL FOR BOTH APPROACH SLABS UNLESS OTHERWISE NOTED.

*DIMENSIONS ARE TO CIRCLES CONCENTRIC WITH -Y1-.

ARC OFFSETS ARE NEGLIGIBLE, THEREFORE NOT SHOWN.

NOTES

APPROACH SLAB SHALL NOT BE CONSTRUCTED PRIOR TO COMPLETION OF THE BRIDGE DECK.

FOR REINFORCED BRIDGE APPROACH FILL INCLUDING GEOTEXTILE, IMPERMEABLE GEOMEMBRANE, 4" Ø DRAINAGE PIPE, #78M STONE, AND SELECT MATERIAL, SEE ROADWAY PLANS.

AREA BETWEEN THE WINGWALL AND APPROACH SLAB SHALL BE GRADED TO DRAIN THE WATER AWAY FROM THE FILL FACE OF THE BRIDGE AND SHALL BE PAVED. SEE ROADWAY PLANS.

FOR EXPANSION JOINT SEALS, SEE SPECIAL PROVISIONS.

BILL OF MATERIAL

APPROACH SLAB AT EB #1

BAR	NO.	SIZE	TYPE	LENGTH	WEIGHT
*A1	75	#4	STR	22'-8"	1136
A2	78	#4	STR	22'-6"	1172
*B1	114	#5	STR	23'-11"	2844
B2	114	#6	STR	24'-7"	4209
*B3	4	#5	STR	9'-9"	41
B4	4	#6	STR	9'-9"	59
*J1	61	#4	1	1'-5"	58
REINFORCING STEEL **				LBS.	5440
*EPOXY COATED REINFORCING STEEL **				LBS.	4079
CLASS AA CONCRETE **				C.Y.	63.7

APPROACH SLAB AT EB #2

BAR	NO.	SIZE	TYPE	LENGTH	WEIGHT
*A1	75	#4	STR	22'-8"	1136
A2	78	#4	STR	22'-6"	1172
*B1	114	#5	STR	23'-11"	2844
B2	114	#6	STR	24'-7"	4209
*B3	4	#5	STR	9'-9"	41
B4	4	#6	STR	9'-9"	59
*J1	61	#4	1	1'-5"	58
REINFORCING STEEL **				LBS.	5440
*EPOXY COATED REINFORCING STEEL **				LBS.	4079
CLASS AA CONCRETE **				C.Y.	63.7

BAR TYPE

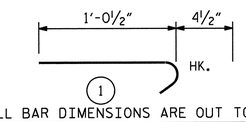

ALL BAR DIMENSIONS ARE OUT TO OUT

** QUANTITIES FOR BARRIER RAIL ARE NOT INCLUDED. SEE SHEET 2 OF 2.

THE QUANTITY OF #4 J1 BARS ON THE BILL OF MATERIAL IS BASED ON 1'-0" CENTERS. J1 BARS SHALL BE PLACED AT EACH VERTICAL STUD ANCHOR BOLT. IN THE EVENT THAT THE NUMBER OF VERTICAL STUD ANCHORS EXCEEDS THE NUMBER OF J1 BARS SPECIFIED, ADDITIONAL J1 BARS WILL NOT BE REQUIRED.

SPLICE LENGTHS

BAR SIZE	EPOXY COATED	UNCOATED
#4	2'-0"	1'-9"
#5	2'-6"	2'-2"
#6	3'-10"	2'-7"

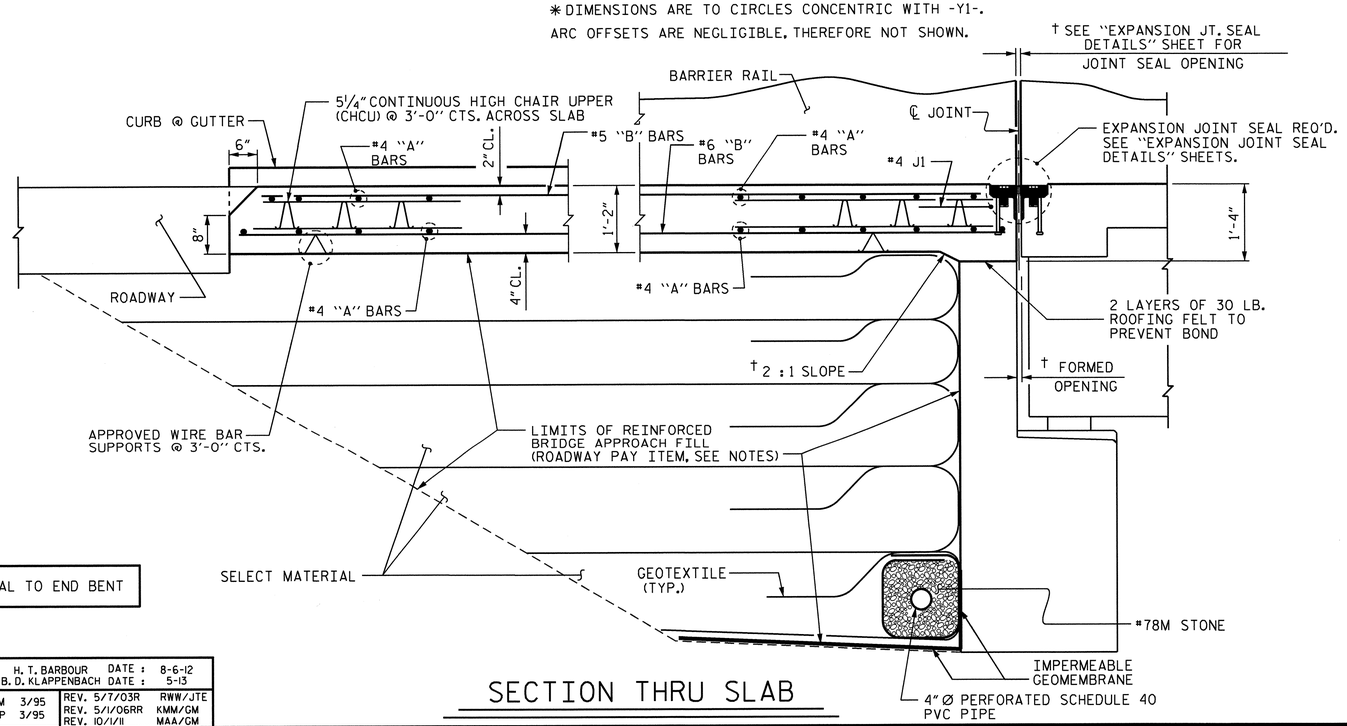

† NORMAL TO END BENT

SECTION THRU SLAB

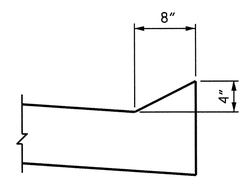

SECTION N-N

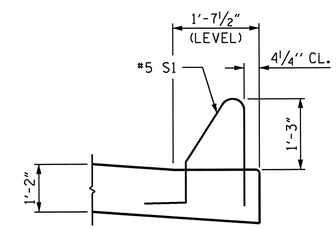

SECTION K-K

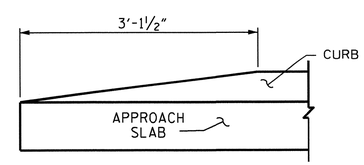

END OF CURB WITHOUT SHOULDER BERM GUTTER

CURB DETAILS

PROJECT NO. R-2707B

CLEVELAND COUNTY

STATION: 354+83.22-L-

SHEET 1 OF 2

STATE OF NORTH CAROLINA
DEPARTMENT OF TRANSPORTATION
RALEIGH

BRIDGE APPROACH SLAB FOR FLEXIBLE PAVEMENT

NORTH CAROLINA PROFESSIONAL SEAL 5025 ENGINEER BRADLEY D. KLAPPENBACH 6-27-2013

REVISIONS							SHEET NO.
NO.	BY:	DATE:	NO.	BY:	DATE:		S-265
1			3				TOTAL SHEETS
2			4				266

ASSEMBLED BY :	H. T. BARBOUR	DATE :	8-6-12
CHECKED BY :	B. D. KLAPPENBACH	DATE :	5-13
DRAWN BY : EEM 3/95	REV. 5/7/03R	RWW/JTE	
CHECKED BY : VAP 3/95	REV. 5/1/06RR	KMM/GM	
	REV. 10/1/11	MAA/GM	

23-MAY-2013 15:49
K:\Structures\Plans\Bailey\Str7\TBARBOUR\Microstation\R-2707B_SD_AS.dgn
tbarbour

STR #7

STD. NO. BAS2 (SHT 4a)

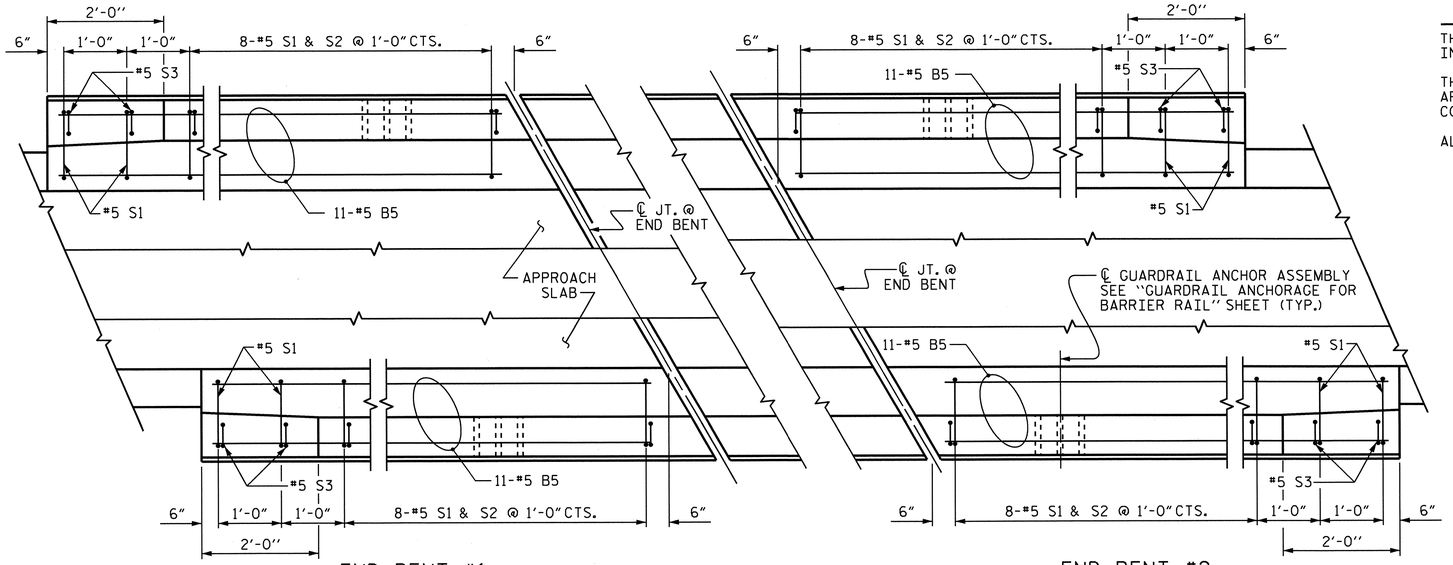

END BENT #1

END BENT #2

PLAN OF BARRIER RAIL

NOTES

THE COST OF THE BARRIER RAIL ON THE APPROACH SLAB SHALL BE INCLUDED IN THE LINEAR FOOT CONTRACT PRICE BID FOR "CONCRETE BARRIER RAIL".

THE BARRIER RAIL ON EACH APPROACH SLAB SHALL NOT BE CAST UNTIL ALL APPROACH SLAB CONCRETE HAS BEEN CAST AND HAS REACHED A MINIMUM COMPRESSIVE STRENGTH OF 3,000 PSI.

ALL REINFORCING STEEL IN BARRIER RAILS SHALL BE EPOXY COATED.

BAR TYPES

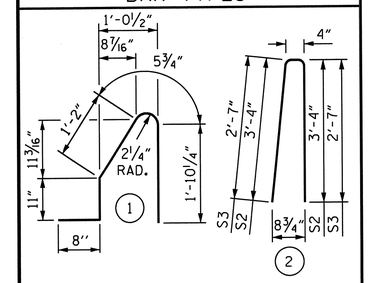

ALL BAR DIMENSIONS ARE OUT TO OUT

BILL OF MATERIAL

BARRIER RAIL ONLY

BAR	NO.	SIZE	TYPE	LENGTH	WEIGHT
* B5	44	#5	STR	9'-9"	447
* S1	40	#5	1	5'-1"	212
* S2	32	#5	2	7'-0"	234
* S3	8	#5	2	5'-6"	46
* EPOXY COATED REINFORCING STEEL				LBS.	939
CLASS AA CONCRETE				C. Y.	5.5
CONCRETE BARRIER RAIL					41.3 LIN. FT.

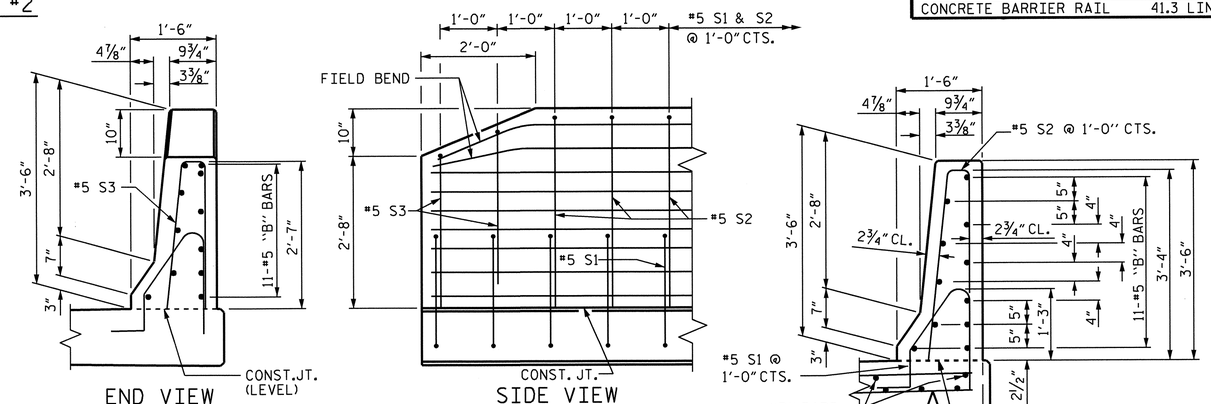

END VIEW

SIDE VIEW

END OF RAIL DETAILS

SECTION THRU RAIL

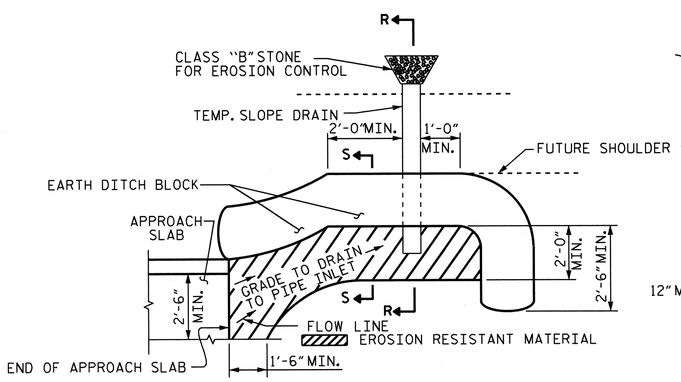

NOTE: IMMEDIATELY AFTER THE CONSTRUCTION OF THE APPROACH SLAB, THE CONTRACTOR SHALL PROVIDE TEMPORARY BERM AND SLOPE DRAIN. CONTRACTOR SHALL GRADE TO PIPE INLET AND PROVIDE EROSION RESISTANT MATERIAL AS SHOWN. THE EROSION RESISTANT MATERIAL SHALL BE EITHER 1) ASPHALT PLANT MIX, TYPE 1 OR TYPE 2, MIN. 2" DEPTH, 2) EROSION CONTROL MAT, OR 3) CONCRETE, AS DIRECTED BY THE ENGINEER. THE SLOPE DRAIN SHALL CONSIST OF A NON-PERFORATED TEMPORARY DRAINAGE PIPE, 12 INCHES IN DIAMETER.

PLAN VIEW

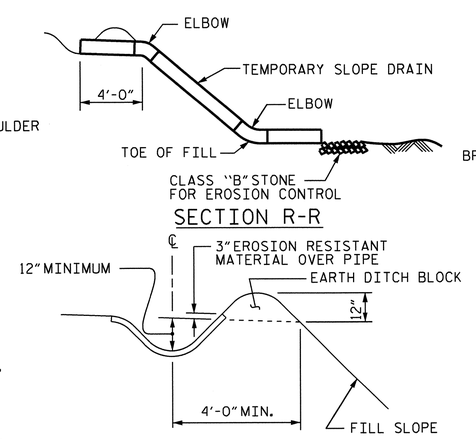

SECTION R-R

SECTION S-S

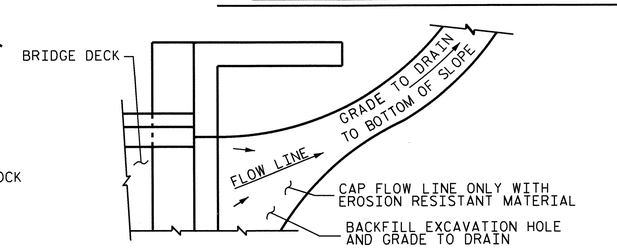

NOTE: IF THE APPROACH SLAB IS NOT CONSTRUCTED IMMEDIATELY AFTER THE BACKFILLING OF THE END BENT EXCAVATION, GRADE TO DRAIN TO THE BOTTOM OF THE SLOPE AND PROVIDE EROSION RESISTANT MATERIAL, SUCH AS FIBERGLASS ROVING OR AS DIRECTED BY THE ENGINEER TO PREVENT SOIL EROSION AND TO PROTECT THE AREA ADJACENT TO THE STRUCTURE. THE CONTRACTOR WILL BE REQUIRED TO REMOVE THESE MATERIALS PRIOR TO CONSTRUCTION OF THE APPROACH SLAB.

TEMPORARY DRAINAGE DETAIL

TEMPORARY BERM AND SLOPE DRAIN DETAILS

(TO BE USED WHEN SHOULDER BERM GUTTER IS REQUIRED)

PROJECT NO. R-2707B

CLEVELAND COUNTY

STATION: 354+83.22-L-

SHEET 2 OF 2

STATE OF NORTH CAROLINA
DEPARTMENT OF TRANSPORTATION
RALEIGH

STANDARD

BRIDGE APPROACH SLAB DETAILS

NORTH CAROLINA PROFESSIONAL SEAL 15825 ENGINEER BRUCE D. KLAPPENBACH 6-27-2013

REVISIONS								SHEET NO.
NO.	BY:	DATE:	NO.	BY:	DATE:			S-266
1			3					TOTAL SHEETS
2			4					266

ASSEMBLED BY : H. T. BARBOUR		DATE :	11-27-12	
CHECKED BY : B. D. KLAPPENBACH		DATE :	5-13	
DRAWN BY : FCJ	11/88	REV. 10/1/11		MAA/GM
CHECKED BY : ARB	11/88	REV. 7/12		MAA/GM
		REV. 10/12		MAA/GM

20-JUN-2013 14:02
K:\Structures\Plans\Bailey\Str7\TBARBOUR\Microstation\R-2707B_SD_AS.dgn
tbarbour

STD. NO. BAS4 (SHT 3a)

F. A. PROJECT : NHF-0074(107)

BM #8: 8" Ø NAIL IN BASE OF 10" MAPLE, 67.55' LEFT OF STATION 182+98.99 -BL-, EL. 813.42

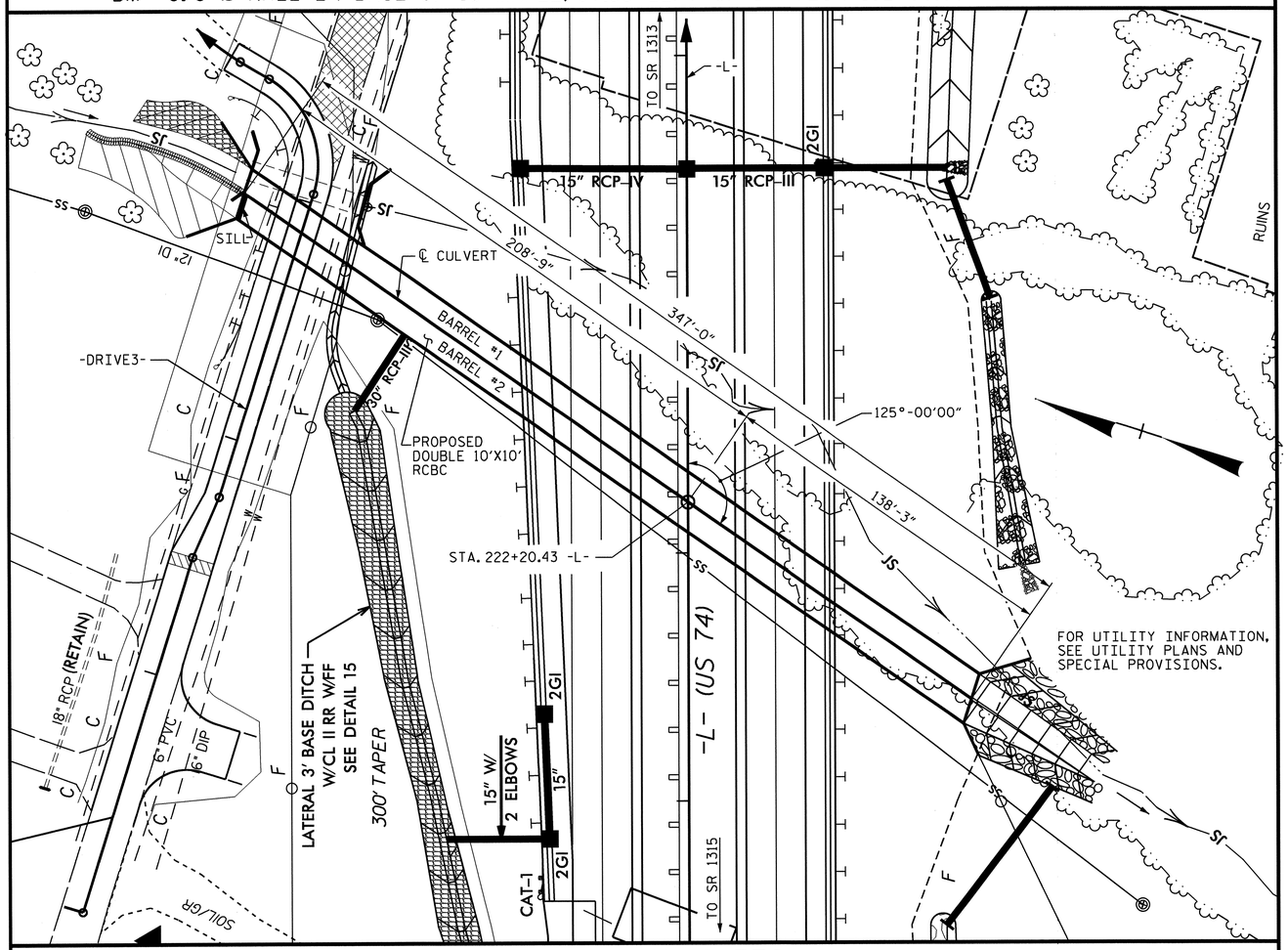

LOCATION SKETCH

ROADWAY DATA

GRADE PT. EL. @ STA. 222+20.43 -L-	= 845.29
BED EL. @ STA. 222+20.43 -L-	= 807.93
ROADWAY SLOPES @ STA. 222+20.43 -L-	= 2:1

HYDRAULIC DATA

DESIGN DISCHARGE	= 1200 C.F.S.
FREQUENCY OF DESIGN FLOOD	= 50 YR.
DESIGN HIGH WATER ELEVATION	= 817.50
DRAINAGE AREA	= 0.85 SQ. MI.
BASE DISCHARGE (Q100)	= 1300 C.F.S.
BASE HIGH WATER ELEVATION	= 817.80

OVERTOPPING FLOOD DATA

OVERTOPPING DISCHARGE	= 2900 C.F.S.
FREQUENCY OF OVERTOPPING FLOOD	= +500 YR.
OVERTOPPING FLOOD ELEVATION	= 835.00

TOTAL STRUCTURE QUANTITIES

CLASS A CONCRETE			
BARREL @ 3.912 CY/FT	1357.5	C.Y.	
WING ETC.	37.4	C.Y.	
SILL	0.8	C.Y.	
TOTAL	1395.7	C.Y.	
REINFORCING STEEL			
BARREL	120543	LBS.	
WINGS ETC.	2459	LBS.	
TOTAL	123002	LBS.	
CULVERT EXCAVATION	LUMP SUM		
FOUNDATION COND. MAT'L	559.0	TONS	

NOTES

ASSUMED LIVE LOAD ---------- HL-93 OR ALTERNATE LOADING.

DESIGN FILL---------- 27.63 FT. MAX

DESIGN FILL---------- 6.63 FT. MIN.

FOR OTHER DESIGN DATA AND NOTES SEE STANDARD NOTE SHEET.

3" Ø WEEP HOLES INDICATED TO BE IN ACCORDANCE WITH THE SPECIFICATIONS.

CONCRETE IN CULVERTS TO BE POURED IN THE FOLLOWING ORDER:

1. WING FOOTINGS AND FLOOR SLAB INCLUDING 4" OF ALL VERTICAL WALLS.
2. THE REMAINING PORTIONS OF THE WALLS AND WINGS FULL HEIGHT FOLLOWED BY ROOF SLAB AND HEADWALLS.

THE RESIDENT ENGINEER SHALL CHECK THE LENGTH OF CULVERT BEFORE STAKING IT OUT TO MAKE CERTAIN THAT IT WILL PROPERLY TAKE CARE OF THE FILL.

DIMENSIONS FOR WING LAYOUT AS WELL AS ADDITIONAL REINFORCING STEEL EMBEDDED IN BARREL ARE SHOWN ON WING SHEET.

TRANSVERSE CONSTRUCTION JOINTS SHALL BE USED IN THE BARREL, SPACED TO LIMIT THE POURS TO A MAXIMUM OF 70 FT. LOCATION OF JOINTS SHALL BE SUBJECT TO APPROVAL OF THE ENGINEER.

STEEL IN THE BOTTOM SLAB MAY BE SPLICED AT THE PERMITTED CONSTRUCTION JOINT AT THE CONTRACTOR'S OPTION. EXTRA WEIGHT OF STEEL DUE TO THE SPLICES SHALL BE PAID FOR BY THE CONTRACTOR.

AT THE CONTRACTOR'S OPTION, HE MAY SPLICE THE VERTICAL REINFORCING STEEL IN THE INTERIOR FACE OF EXTERIOR WALL AND BOTH FACES OF INTERIOR WALLS ABOVE LOWER WALL CONSTRUCTION JOINT. THE SPLICE LENGTH SHALL BE AS PROVIDED IN THE SPLICE LENGTH CHART SHOWN ON THE PLANS. EXTRA WEIGHT OF STEEL DUE TO THE SPLICES SHALL BE PAID FOR BY THE CONTRACTOR.

FOR SUBMITTAL OF WORKING DRAWINGS, SEE SPECIAL PROVISIONS.

FOR FALSEWORK AND FORMWORK, SEE SPECIAL PROVISIONS.

FOR GROUT FOR STRUCTURES, SEE SPECIAL PROVISIONS.

FOR CRANE SAFETY, SEE SPECIAL PROVISIONS.

THE CONTRACTOR SHALL PROVIDE INDEPENDENT ASSURANCE SAMPLES OF REINFORCING STEEL AS FOLLOWS: FOR PROJECTS REQUIRING UP TO 400 TONS OF REINFORCING STEEL, ONE 30 INCH SAMPLE OF EACH SIZE BAR USED, AND FOR PROJECTS REQUIRING OVER 400 TONS OF REINFORCING STEEL, TWO 30 INCH SAMPLES OF EACH SIZE BAR USED. THE BARS FROM WHICH THE SAMPLES ARE TAKEN MUST THEN BE SPLICED WITH REPLACEMENT BARS OF THE SIZE AND LENGTH OF THE SAMPLE, PLUS A MINIMUM LAP SPLICE OF THIRTY BAR DIAMETERS. PAYMENT FOR THE SAMPLES OF REINFORCING STEEL SHALL BE CONSIDERED INCIDENTAL TO VARIOUS PAY ITEMS.

A 3 FOOT STRIP OF FILTER FABRIC SHALL BE ATTACHED TO THE FILL FACE OF THE WING COVERING THE ENTIRE LENGTH OF THE EXPANSION JOINT.

FOR CULVERT DIVERSION DETAILS AND PAY ITEM, SEE EROSION CONTROL PLANS.

NO PRECAST REINFORCED BOX CULVERT OPTION WILL BE ALLOWED.

DETAILED DRAWINGS FOR FALSEWORK AND FORMS FOR THIS CULVERT SHALL BE SUBMITTED. SEE SHEET SN.

FOR INLET AND OUTLET CHANNEL IMPROVEMENT DETAILS AND PAY ITEMS, SEE ROADWAY PLANS.

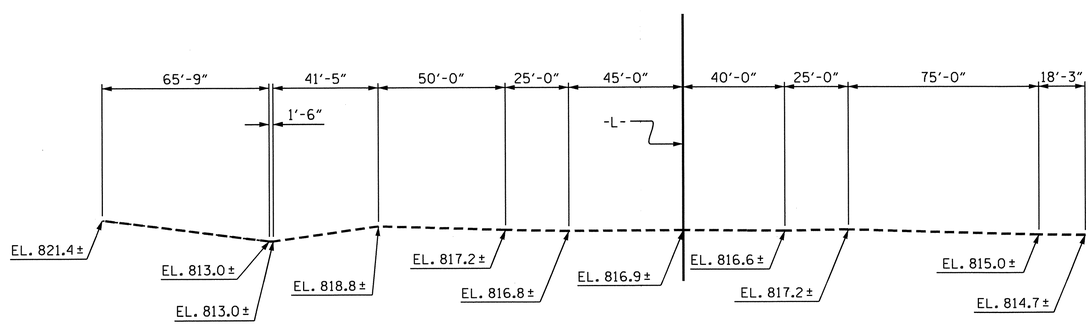

PROFILE ALONG ℄ CULVERT

PROJECT NO. R-2707B
CLEVELAND COUNTY
STATION: 222+20.43 -L-

SHEET 1 OF 5 CULVERT NO. 464

STATE OF NORTH CAROLINA
DEPARTMENT OF TRANSPORTATION
RALEIGH

BARREL STANDARD

DOUBLE 10FT. X 10FT. CONCRETE BOX CULVERT

NORTH CAROLINA PROFESSIONAL SEAL 13014 ENGINEER QUANG H. NGUYEN
Quang H. Nguyen 6-27-13

NORTH CAROLINA PROFESSIONAL SEAL 15825 ENGINEER BRIAN D. KLAPPENBACH
6-27-2013

DESIGN ENGINEER OF RECORD: H.P. KIM	DATE : 5-14-13	
ASSEMBLED BY : R. P. PATEL	DATE : 3-19-13	SPECIAL
CHECKED BY : V. X. NGUYEN	DATE : 4-8-13	
DRAWN BY : R.W. WRIGHT	DATE : OCT. 1989	STANDARD
CHECKED BY : C.R.K.	DATE : OCT. 1989	

REVISIONS						SHEET NO.
NO.	BY:	DATE:	NO.	BY:	DATE:	C-1
1			3			TOTAL SHEETS
2			4			5

STD. NO. CB222A

ADDED NOV.1990

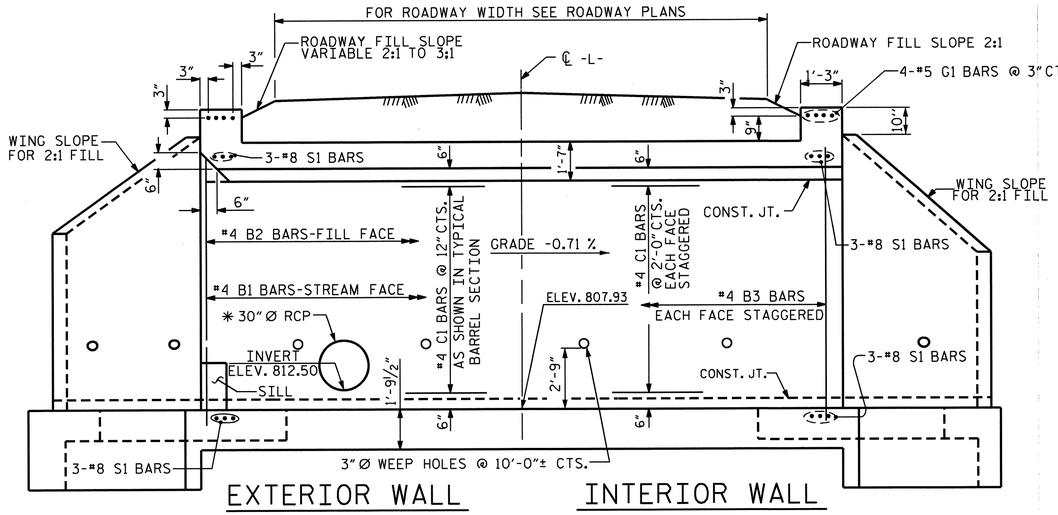

CULVERT SECTION NORMAL TO ROADWAY

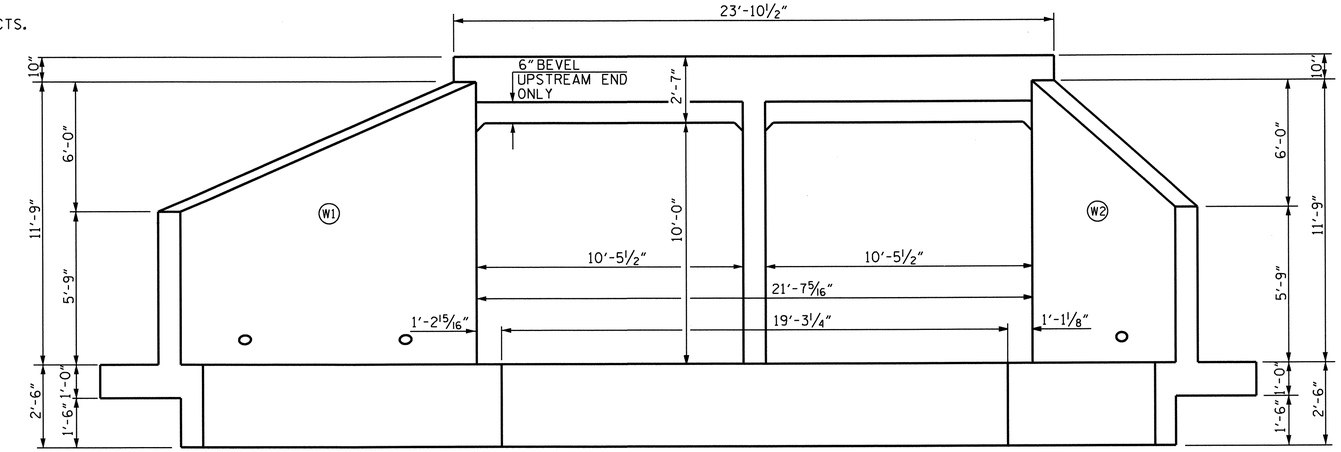

END ELEVATION NORMAL TO SKEW

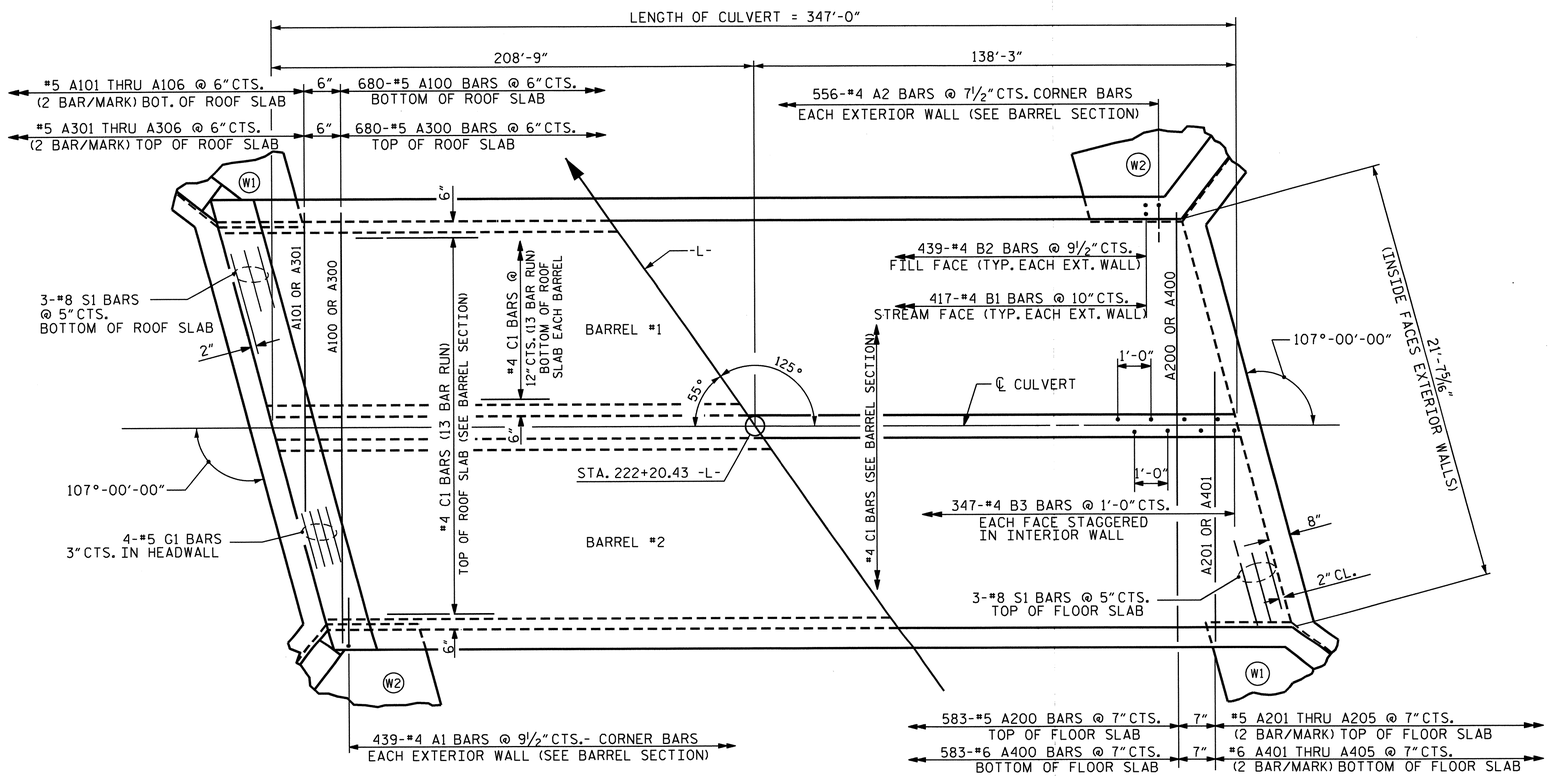

PART PLAN - ROOF SLAB

PART PLAN - FLOOR SLAB

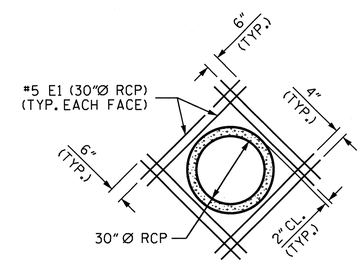

DETAIL OF REINFORCING AROUND RCP

✳ THE 30"RCP THROUGH THE SIDEWALL OF THE CULVERT WILL BE LOCATED BY THE ENGINEER. THE REINFORCING STEEL SHALL BE FIELD BENT OR CUT AS NECESSARY TO CLEAR PIPE.

PROJECT NO. R-2707B
CLEVELAND COUNTY
STATION: 222+20.43 -L-

SHEET 2 OF 5

STATE OF NORTH CAROLINA
DEPARTMENT OF TRANSPORTATION
RALEIGH

BARREL STANDARD

DOUBLE 10 FT. X 10 FT. CONCRETE BOX CULVERT

NORTH CAROLINA PROFESSIONAL SEAL 15825 ENGINEER BRUCE D. KLAPPENBACH 6-27-2013

DESIGN ENGINEER OF RECORD: H.P. KIM	DATE : 5-14-13		
ASSEMBLED BY : R. P. PATEL	DATE : 3-19-13	SPECIAL	
CHECKED BY : V. X. NGUYEN	DATE : 4-8-13		
DRAWN BY : W. BRYAN STANLEY II	DATE : NOV.1971	STANDARD	
CHECKED BY : JOEL A. JOHNSON	DATE : DEC.1971		

REVISIONS

NO.	BY:	DATE:	NO.	BY:	DATE:
1			3		
2			4		

SHEET NO. C-2
TOTAL SHEETS 5

STD. NO. CB222

REVISED 11-19-99 BY M.M. CHECKED BY R.W.W.
REVISED 8-28-92 BY E.L.R. CHECKED BY G.R.P.
REDRAWN 11-90 BY A.R.B. CHECKED BY C.R.K.

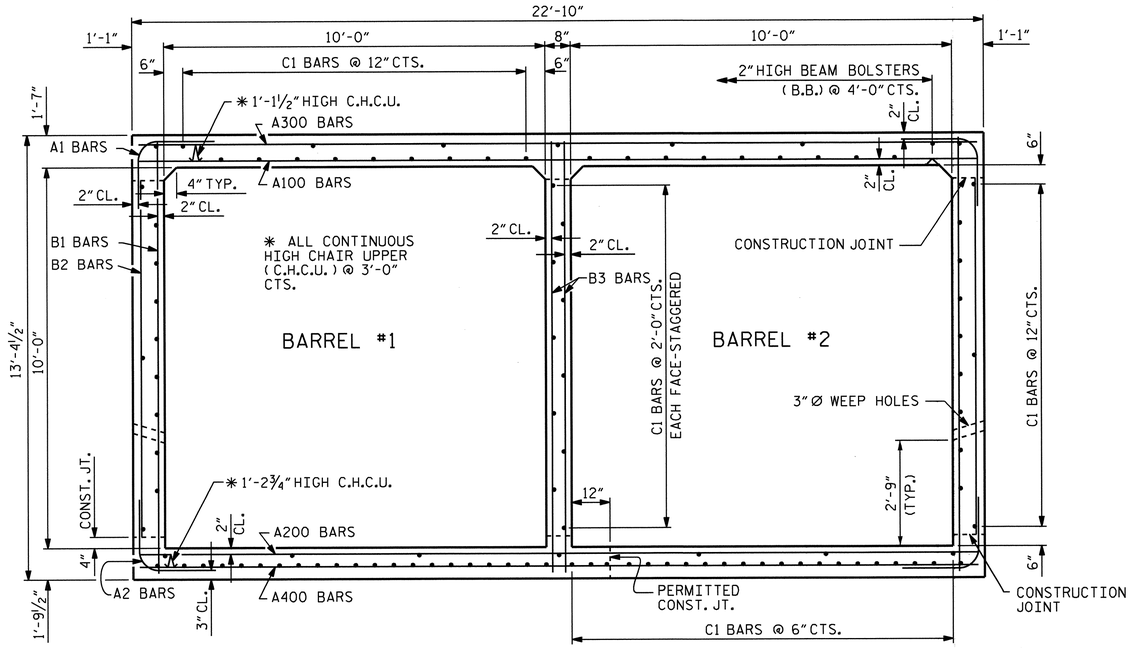

RIGHT ANGLE SECTION OF BARREL

THERE ARE 108 "C" BARS IN SECTION OF BARREL

BAR TYPE

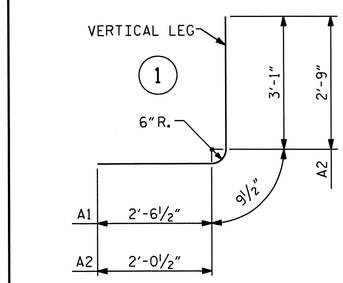

ALL BAR DIMENSIONS ARE OUT TO OUT

SPLICE LENGTHS CHART

BAR	SIZE	SPLICE LENGTH
C1	#4	1'-11"
B1, B2, B3	#4	1'-9"

BILL OF MATERIAL

BAR	NO.	SIZE	TYPE	LENGTH	WEIGHT	BAR	NO.	SIZE	TYPE	LENGTH	WEIGHT
A1	878	#4	1	6'-5"	3763	A305	4	#5	STR	5'-8"	24
A2	1112	#4	1	5'-7"	4147	A306	4	#5	STR	2'-5"	10
A100	680	#5	STR	22'-5"	15899	A400	583	#6	STR	22'-5"	19630
A101	4	#5	STR	18'-9"	78	A401	4	#6	STR	18'-3"	110
A102	4	#5	STR	15'-6"	65	A402	4	#6	STR	14'-5"	87
A103	4	#5	STR	12'-3"	51	A403	4	#6	STR	10'-7"	64
A104	4	#5	STR	9'-0"	38	A404	4	#6	STR	6'-9"	41
A105	4	#5	STR	5'-8"	24	A405	4	#6	STR	3'-0"	18
A106	4	#5	STR	2'-5"	10						
						B1	834	#4	STR	12'-10"	7150
A200	583	#5	STR	22'-5"	13631	B2	878	#4	STR	9'-4"	5474
						B3	694	#4	STR	12'-10"	5949
A201	4	#5	STR	18'-3"	76						
A202	4	#5	STR	14'-5"	60	C1	1404	#4	STR	28'-8"	26886
A203	4	#5	STR	10'-7"	44						
A204	4	#5	STR	6'-9"	28	D1	3	#6	STR	3'-4"	15
A205	4	#5	STR	3'-0"	13						
						E1	16	#5	STR	4'-8"	78
A300	680	#5	STR	22'-5"	15899						
						G1	8	#5	STR	23'-6"	196
A301	4	#5	STR	18'-9"	78						
A302	4	#5	STR	15'-6"	65	S1	12	#8	STR	23'-6"	753
A303	4	#5	STR	12'-3"	51	REINFORCING STEEL					120,543 LBS
A304	4	#5	STR	9'-0"	38						

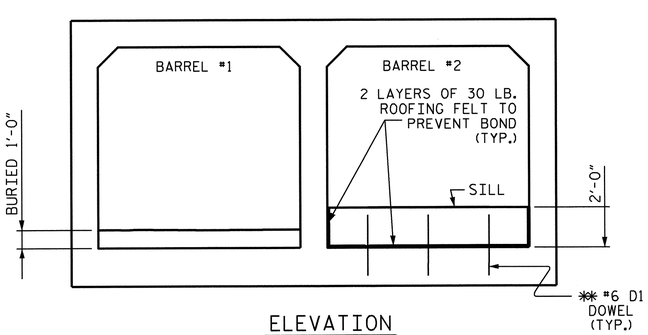

ELEVATION
(INLET END)

CULVERT SILL DETAILS

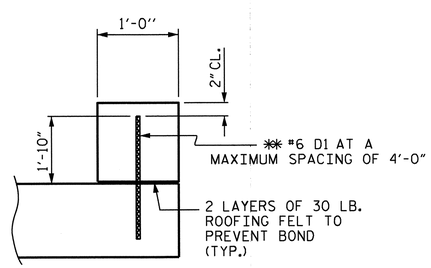

SECTION THROUGH SILL

** DOWELS MAY BE PUSHED INTO GREEN CONCRETE AFTER SLAB HAS BEEN FLOAT FINISHED.

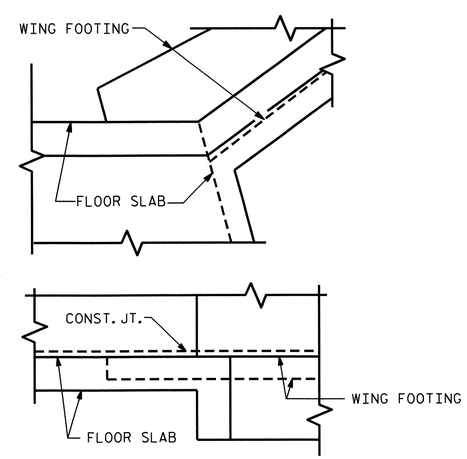

DETAIL

CONNECTION OF WING FOOTING AND FLOOR SLAB WHEN SLAB IS THICKER THAN FOOTING

PROJECT NO. R-2707B
CLEVELAND COUNTY
STATION: 222+20.43 -L-

SHEET 3 OF 5

STATE OF NORTH CAROLINA
DEPARTMENT OF TRANSPORTATION
RALEIGH

BARREL STANDARD
DOUBLE 10 FT. X 10 FT.
CONCRETE BOX CULVERT
125° SKEW

NORTH CAROLINA PROFESSIONAL SEAL 15825 ENGINEER BRIAN D. KLAPPENBACH
6-27-2013

REVISIONS						SHEET NO.
NO.	BY:	DATE:	NO.	BY:	DATE:	C-3
1			3			TOTAL SHEETS
2			4			5

DRAWN BY : R. P. PATEL DATE : 3-20-13
CHECKED BY : V. X. NGUYEN DATE : 4-8-13
DESIGN ENGINEER OF RECORD: H.P. KIM DATE : 5-14-13

19-JUN-2013 15:43
R:\Structures\Plans\Bailey\Str8\raman\R-2707B_SD_CUL.dgn
bklappenbach

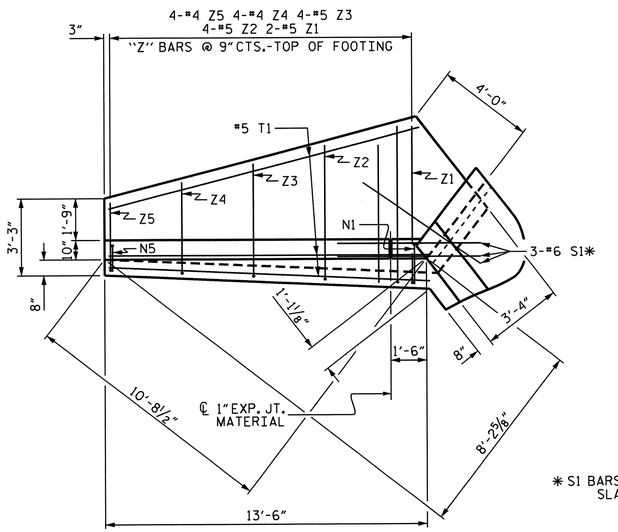

PLAN W2

* S1 BARS @ BOTTOM OF FLOOR SLAB AND FOOTING

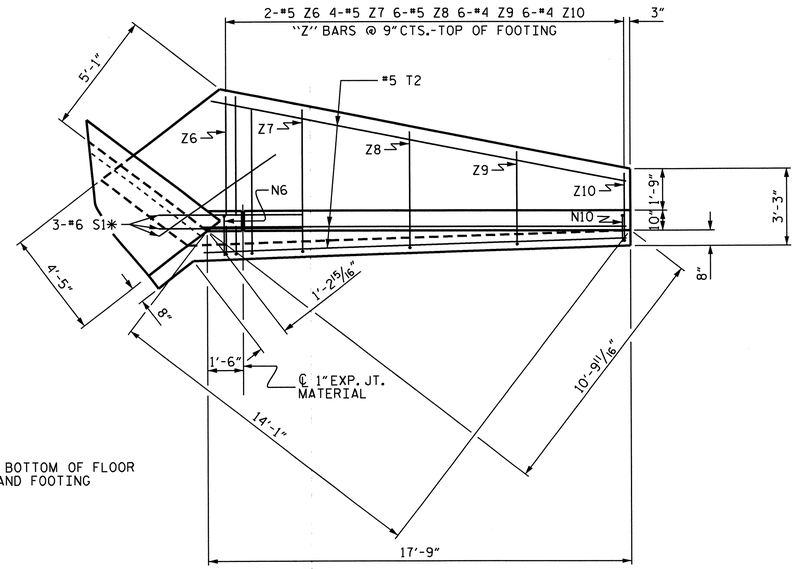

PLAN W1

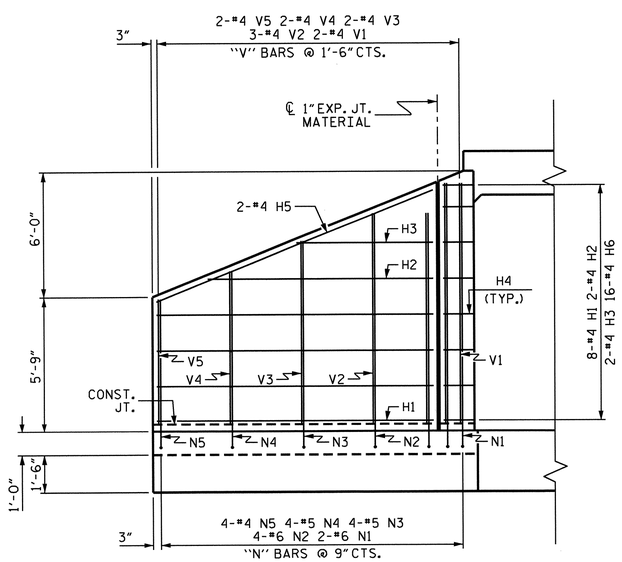

ELEVATION W2

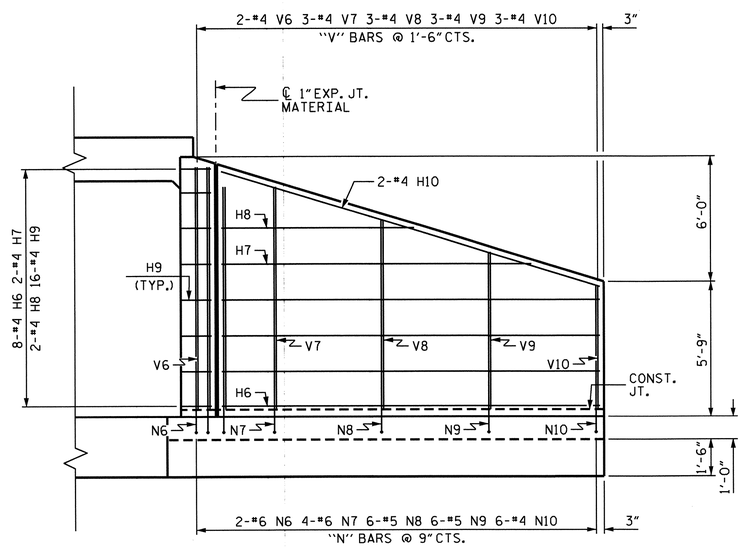

ELEVATION W1

BAR TYPES

ALL BAR DIMENSIONS ARE OUT TO OUT.

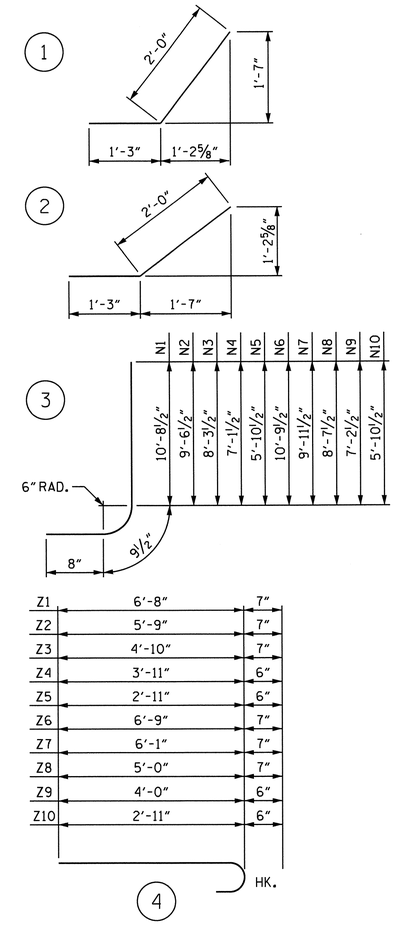

BILL OF MATERIAL

BAR	NO.	SIZE	TYPE	LENGTH	WEIGHT
H1	16	#4	STR	11'-7"	124
H2	4	#4	STR	9'-5"	25
H3	4	#4	STR	5'-8"	15
H4	32	#4	1	3'-3"	69
H5	4	#4	STR	12'-6"	33
H6	16	#4	STR	15'-10"	169
H7	4	#4	STR	13'-0"	35
H8	4	#4	STR	8'-1"	22
H9	32	#4	2	3'-3"	69
H10	4	#4	STR	16'-7"	44
N1	4	#6	3	12'-2"	73
N2	8	#6	3	11'-0"	132
N3	8	#5	3	9'-9"	81
N4	8	#5	3	8'-7"	72
N5	8	#4	3	7'-4"	39
N6	4	#6	3	12'-3"	74
N7	8	#6	3	11'-5"	137
N8	12	#5	3	10'-1"	126
N9	12	#5	3	8'-8"	108
N10	12	#4	3	7'-4"	59
S1	12	#6	STR	6'-0"	108
T1	6	#5	STR	13'-6"	84
T2	6	#5	STR	17'-9"	111
V1	4	#4	STR	10'-2"	27
V2	6	#4	STR	8'-11"	36
V3	4	#4	STR	7'-9"	21
V4	4	#4	STR	6'-6"	17
V5	4	#4	STR	5'-4"	14
V6	4	#4	STR	10'-3"	27
V7	6	#4	STR	9'-5"	38
V8	6	#4	STR	8'-0"	32
V9	6	#4	STR	6'-8"	27
V10	6	#4	STR	5'-3"	21
Z1	4	#5	4	7'-3"	30
Z2	8	#5	4	6'-4"	53
Z3	8	#5	4	5'-5"	45
Z4	8	#4	4	4'-5"	24
Z5	8	#4	4	3'-5"	18
Z6	4	#5	4	7'-4"	31
Z7	8	#5	4	6'-8"	56
Z8	12	#5	4	5'-7"	70
Z9	12	#4	4	4'-6"	36
Z10	12	#4	4	3'-5"	27

REINFORCING STEEL FOR 4 WINGS 2459 LBS

CLASS A CONCRETE

4 WINGS	32.8	CY
2 HEADWALLS	2.2	CY
2 END CURTAIN WALLS	2.4	CY
TOTAL	37.4	CY

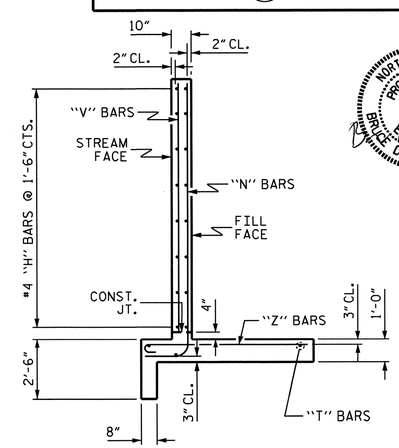

TYPICAL WING SECTION

NORTH CAROLINA PROFESSIONAL SEAL 15825 ENGINEER BRYCE D. KLAPPENBACH 6-27-2013

PROJECT NO. R-2707B

CLEVELAND COUNTY

STATION: 222+20.43 -L-

SHEET 4 OF 5

STATE OF NORTH CAROLINA
DEPARTMENT OF TRANSPORTATION
RALEIGH

STANDARD WINGS FOR CONCRETE BOX CULVERT

H = 10'-0" SLOPE = 2:1

105° SKEW

ASSEMBLED BY : R. P. PATEL	DATE : 3-19-13
CHECKED BY : V. X. NGUYEN	DATE : 4-8-13
DRAWN BY : CCJ	01/00
CHECKED BY : RWW	03/00

REVISIONS						SHEET NO.
NO.	BY:	DATE:	NO.	BY:	DATE:	C-4
1			3			TOTAL SHEETS
2			4			5

STD. NO. CW7510.STD

LOAD AND RESISTANCE FACTOR RATING (LRFR) SUMMARY FOR REINFORCED CONCRETE BOX CULVERTS

LEVEL		VEHICLE	WEIGHT (W) (TONS)	CONTROLLING LOAD RATING (#)	MINIMUM RATING FACTORS (RF)	TONS = W x RF	STRENGTH I LIMIT STATE									COMMENT NUMBER
							LIVE-LOAD FACTORS (γ_{LL})	MOMENT				SHEAR				
								RATING FACTOR	BOX NO.	ELEMENT TYPE	DISTANCE FROM LEFT END OF ELEMENT (ft)	RATING FACTOR	BOX NO.	ELEMENT TYPE	DISTANCE FROM LEFT END OF ELEMENT (ft)	
DESIGN LOAD RATING		HL-93 (INVENTORY)	N/A	1	1.41	--	1.75	1.41	1	EXTERIOR WALL	0.88	2.94	1	EXTERIOR WALL	1.60	
		HL-93 (OPERATING)	N/A		1.82	--	1.35	1.82	1	EXTERIOR WALL	0.88	3.82	1	EXTERIOR WALL	1.60	
		HS-20 (INVENTORY)	36.000	2	1.41	50.67	1.75	1.41	1	EXTERIOR WALL	0.88	2.94	1	EXTERIOR WALL	1.60	
		HS-20 (OPERATING)	36.000		1.73	65.69	1.35	1.82	1	EXTERIOR WALL	0.88	3.82	1	EXTERIOR WALL	1.60	
LEGAL LOAD RATING	SINGLE VEHICLE (SV)	SNSH	13.500	3	1.73	23.40	1.40	1.73	1	EXTERIOR WALL	0.88	3.67	1	EXTERIOR WALL	1.60	
		SNGARBS2	20.000		1.73	34.67	1.40	1.73	1	EXTERIOR WALL	0.88	3.67	1	EXTERIOR WALL	1.60	
		SNAGRIS2	22.000		1.73	38.17	1.40	1.73	1	EXTERIOR WALL	0.88	3.67	1	EXTERIOR WALL	1.60	
		SNCOTTS3	27.250		1.73	47.24	1.40	1.73	1	EXTERIOR WALL	0.88	3.67	1	EXTERIOR WALL	1.60	
		SNAGGRS4	34.925		1.73	60.55	1.40	1.73	1	EXTERIOR WALL	0.88	3.67	1	EXTERIOR WALL	1.60	
		SNS5A	35.550		1.73	61.63	1.40	1.73	1	EXTERIOR WALL	0.88	3.67	1	EXTERIOR WALL	1.60	
		SNS6A	39.950		1.73	69.26	1.40	1.73	1	EXTERIOR WALL	0.88	3.67	1	EXTERIOR WALL	1.60	
		SNS7B	42.000		1.73	72.81	1.40	1.73	1	EXTERIOR WALL	0.88	3.67	1	EXTERIOR WALL	1.60	
	TRUCK TRACTOR SEMI-TRAILER (TTST)	TNAGRIT3	33.000		1.73	57.21	1.40	1.73	1	EXTERIOR WALL	0.88	3.67	1	EXTERIOR WALL	1.60	
		TNT4A	33.075		1.73	57.34	1.40	1.73	1	EXTERIOR WALL	0.88	3.67	1	EXTERIOR WALL	1.60	
		TNT6A	41.600		1.73	72.12	1.40	1.73	1	EXTERIOR WALL	0.88	3.67	1	EXTERIOR WALL	1.60	
		TNT7A	42.000		1.73	72.81	1.40	1.73	1	EXTERIOR WALL	0.88	3.67	1	EXTERIOR WALL	1.60	
		TNT7B	42.000		1.73	72.81	1.40	1.73	1	EXTERIOR WALL	0.88	3.67	1	EXTERIOR WALL	1.60	
		TNAGRIT4	43.000		1.73	74.54	1.40	1.73	1	EXTERIOR WALL	0.88	3.67	1	EXTERIOR WALL	1.60	
		TNAGT5A	45.000		1.73	78.01	1.40	1.73	1	EXTERIOR WALL	0.88	3.67	1	EXTERIOR WALL	1.60	
		TNAGT5B	45.000		1.73	78.01	1.40	1.73	1	EXTERIOR WALL	0.88	3.67	1	EXTERIOR WALL	1.60	

LOAD FACTORS:

DESIGN LOAD RATING FACTORS

LOAD TYPE	MAX FACTOR	MIN FACTOR
DC	1.25	0.90
DW	1.50	0.65
EV	1.30	0.90
EH	1.35	0.90
ES	1.35	0.90
LS	1.75	--
WA	1.00	--

NOTE:

RATING FACTORS ARE BASED ON THE STRENGTH I LIMIT STATE.

COMMENTS:

1.
2.
3.
4.

(#) CONTROLLING LOAD RATING

(1) DESIGN LOAD RATING (HL-93)

(2) DESIGN LOAD RATING (HS-20)

(3) LEGAL LOAD RATING **

** SEE CHART FOR VEHICLE TYPE

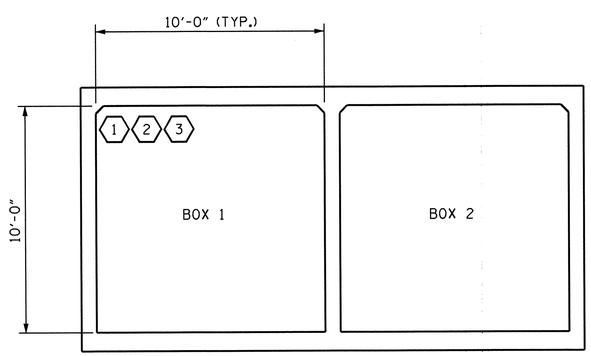

LRFR SUMMARY

(LOOKING DOWNSTREAM)

PROJECT NO. R-2707B

CLEVELAND COUNTY

STATION: 222+20.43 -L-

SHEET 5 OF 5

STATE OF NORTH CAROLINA
DEPARTMENT OF TRANSPORTATION
RALEIGH

STANDARD

LRFR SUMMARY FOR REINFORCED CONCRETE BOX CULVERTS
(NON-INTERSTATE TRAFFIC)

NORTH CAROLINA PROFESSIONAL SEAL 15825 ENGINEER BRIAN D. KLAPPENBACH 6-27-2013

REVISIONS						SHEET NO.
NO.	BY:	DATE:	NO.	BY:	DATE:	C-5
1			3			TOTAL SHEETS
2			4			5

STD. NO. LRFR5

ASSEMBLED BY : R. P. PATEL DATE : 3-19-13
CHECKED BY : V. X. NGUYEN DATE : 4-8-13
DRAWN BY : WMC 7/11
CHECKED BY : GM 7/11
REV. 10/1/11 MAA/GM

19-JUN-2013 15:43
R:\Structures\Plans\Bailey\Str8\raman\R-2707B_SD_CUL.dgn
bklappenbach

GEOTECHNICAL ENGINEER	ENGINEER
NORTH CAROLINA PROFESSIONAL SEAL 29869 ENGINEER SHANE C. CLARK — SIGNATURE 4/9/14 DATE	SIGNATURE DATE

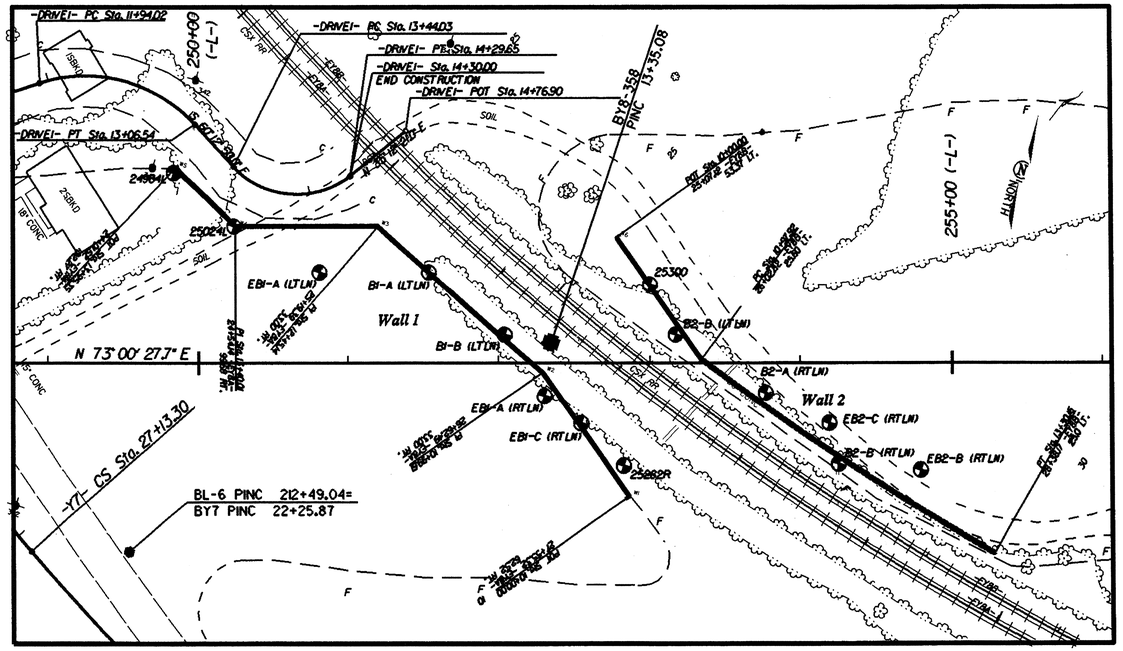

LOCATION SKETCH

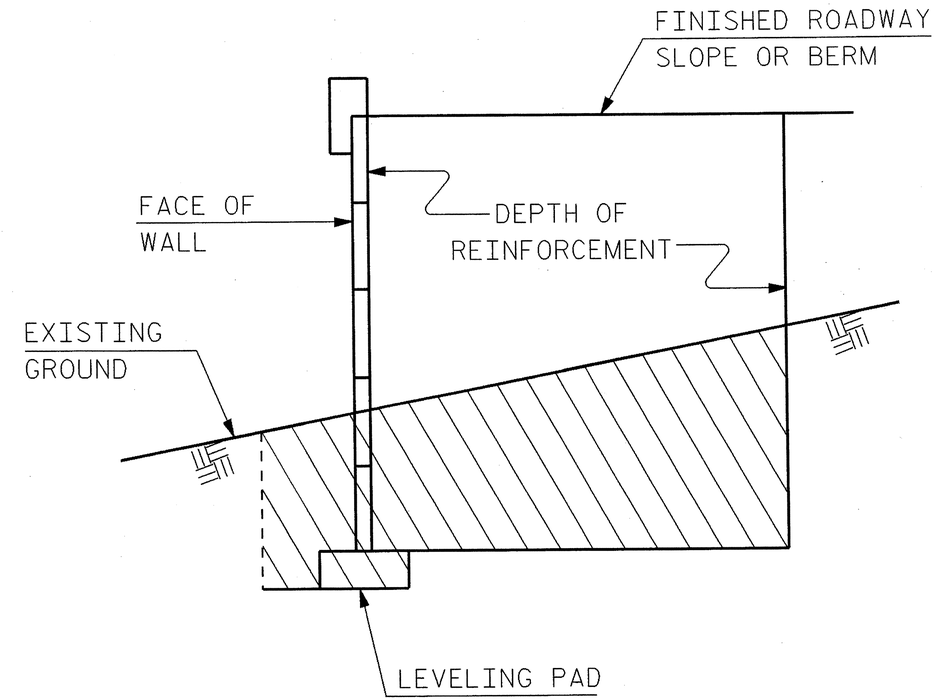

TYPICAL SECTION

TOTAL STRUCTURE QUANTITIES

MECHANICALLY STABILIZED EARTH (MSE) RETAINING WALL AT END BENT #1	6950 SQ. FT.
MECHANICALLY STABILIZED EARTH (MSE) RETAINING WALL AT END BENT #2	4925 SQ. FT.

1

PROJECT NO.: R-2707B
CLEVELAND COUNTY
STATION: 252+73.29 -L-
SHEET 1 OF 4

GEOTECHNICAL ENGINEERING UNIT

☐ EASTERN REGIONAL OFFICE
☒ WESTERN REGIONAL OFFICE
☐ CONTRACT OFFICE

STATE OF NORTH CAROLINA
DEPARTMENT OF TRANSPORTATION
RALEIGH

MSE RETAINING WALL

REVISIONS							SHEET NO.
NO.	BY	DATE	NO.	BY	DATE		W-1
1	SCC	4/9/14	3				TOTAL SHEETS
2			4				4

PREPARED BY: EJS	DATE: 12/13
REVIEWED BY: SCC	DATE: 2/14

GEOTECHNICAL ENGINEER	ENGINEER
NORTH CAROLINA PROFESSIONAL SEAL 29869 ENGINEER SHANE C. CLARK — SIGNATURE 4/9/14 DATE	SIGNATURE DATE

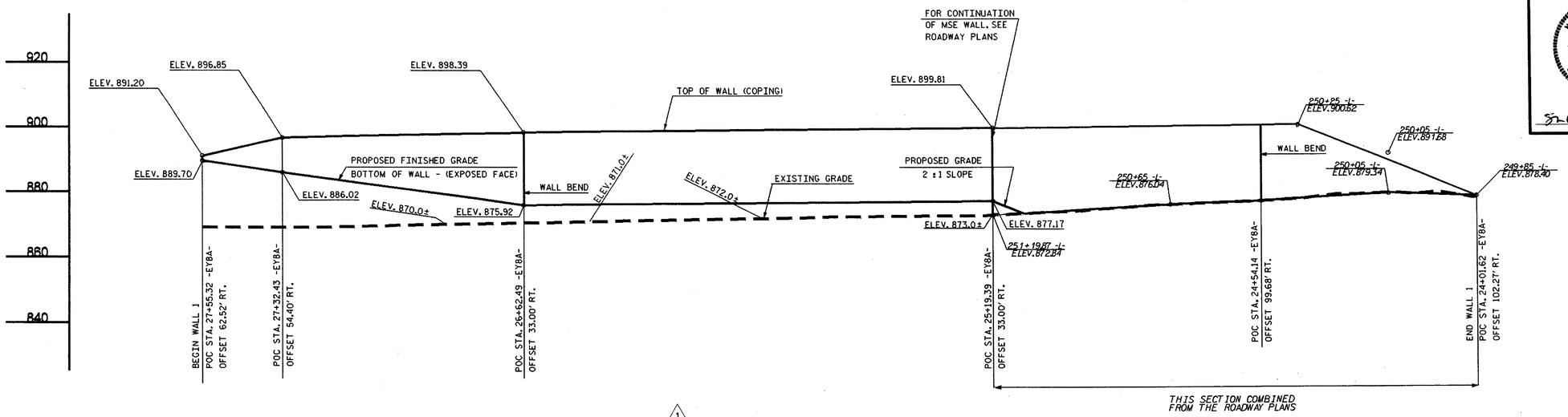

MSE WALL 1 1

(END BENT 1 - LOOKING AT EXPOSED FACE)

NOTE: LINEAR WALL LENGTHS ARE LONGER THAN STATIONING WOULD INDICATE

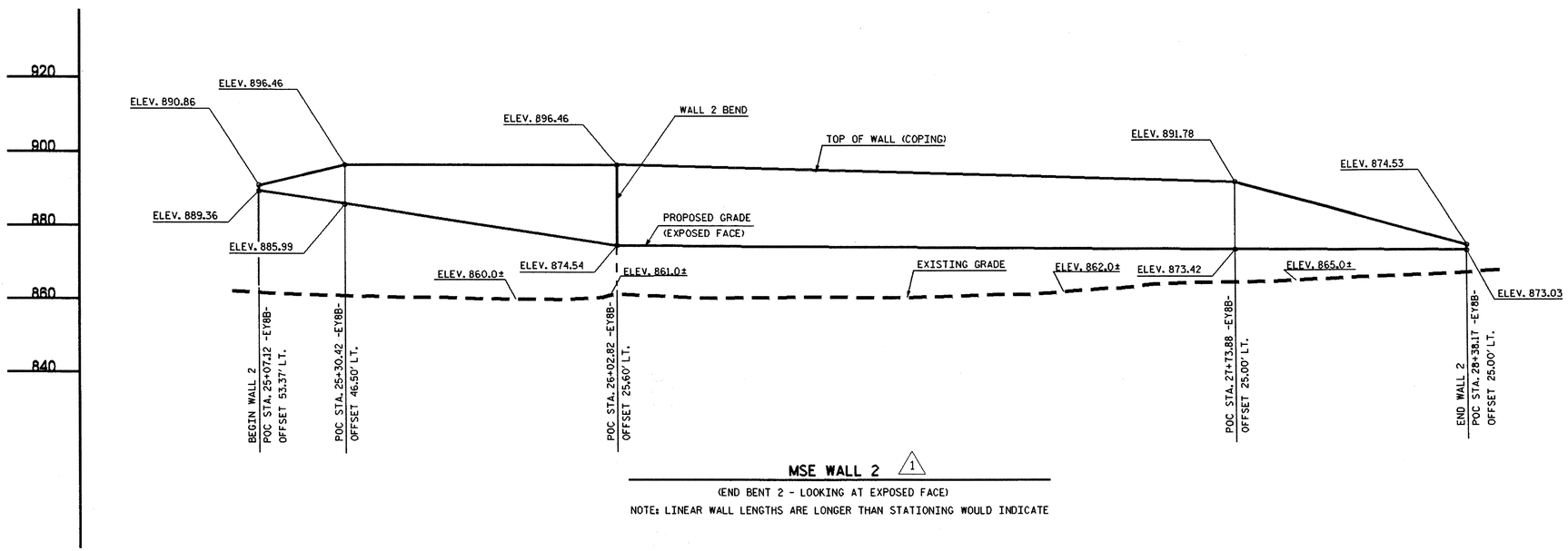

MSE WALL 2 1

(END BENT 2 - LOOKING AT EXPOSED FACE)

NOTE: LINEAR WALL LENGTHS ARE LONGER THAN STATIONING WOULD INDICATE

RETAINING WALL ENEVELOPE 1

PROJECT NO.: R-2707B

CLEVELAND *COUNTY*

STATION: 252+73.29 -L-

SHEET 2 OF 4

GEOTECHNICAL ENGINEERING UNIT

☐ *EASTERN REGIONAL OFFICE*

☒ *WESTERN REGIONAL OFFICE*

☐ *CONTRACT OFFICE*

STATE OF NORTH CAROLINA
DEPARTMENT OF TRANSPORTATION
RALEIGH

MSE RETAINING WALL

REVISIONS							SHEET NO.
NO.	BY	DATE	NO.	BY	DATE		W-2
1	SCC	4/9/14	3				TOTAL SHEETS
2			4				4

PREPARED BY: EJS	DATE: 12/13
REVIEWED BY: SCC	DATE: 2/14

GEOTECHNICAL ENGINEER	ENGINEER
NORTH CAROLINA PROFESSIONAL SEAL 29869 ENGINEER SHANE C. CLARK	
S. Clark 2/12/14	
SIGNATURE DATE	SIGNATURE DATE

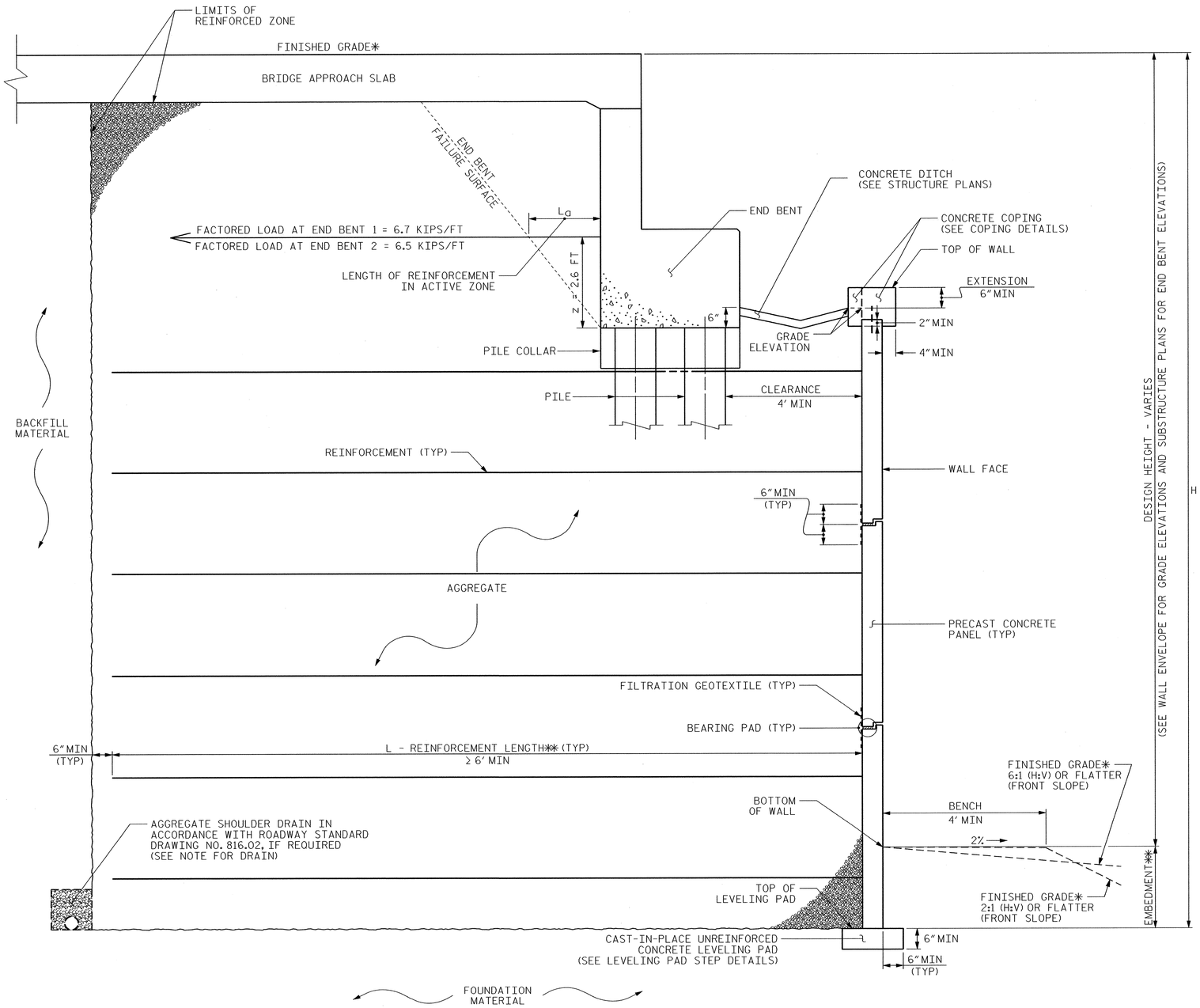

MSE ABUTMENT WALL WITH PRECAST PANELS - TYPICAL SECTION

*SEE ROADWAY PLANS FOR FINISHED GRADE DETAILS.

** TOP OF FOOTING TO BE 7 FT. BELOW TOP OF EXISTING LOW RAIL.

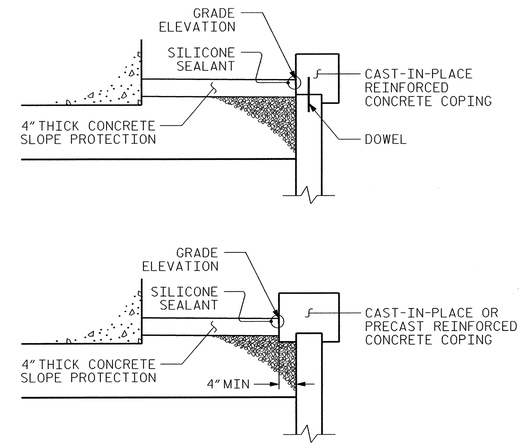

COPING DETAILS

AT THE CONTRACTOR'S OPTION, CONNECT COPING TO PANELS WITH DOWELS OR EXTEND COPING DOWN BACK OF PANELS.

* SEE STRUCTURE PLANS FOR DITCH DETAILS

PROJECT NO.: R-2707B

CLEVELAND **COUNTY**

STATION: 252+73.29 -L-

SHEET 3 OF 4

PREPARED BY: EJS	DATE: 12/13
REVIEWED BY: SCC	DATE: 2/14

GEOTECHNICAL ENGINEERING UNIT

☐ EASTERN REGIONAL OFFICE
☒ WESTERN REGIONAL OFFICE
☐ CONTRACT OFFICE

STATE OF NORTH CAROLINA
DEPARTMENT OF TRANSPORTATION
RALEIGH

MSE RETAINING WALL

REVISIONS						SHEET NO.
NO.	BY	DATE	NO.	BY	DATE	W-3
1			3			TOTAL SHEETS
2			4			4

GEOTECHNICAL ENGINEER	ENGINEER
NORTH CAROLINA PROFESSIONAL SEAL 29869 ENGINEER SHANE C CLARK S. Clark 4/9/14 SIGNATURE DATE	SIGNATURE DATE

NOTES:

FOR MECHANICALLY STABILIZED EARTH (MSE) RETAINING WALLS, SEE MECHANICALLY STABILIZED EARTH RETAINING WALLS PROVISION.

USE AN MSE WALL SYSTEM WITH PRECAST CONCRETE PANELS THAT MEET SECTION 1077 OF THE STANDARD SPECIFICATIONS FOR RETAINING WALLS.

A DRAIN IS REQUIRED FOR RETAINING WALLS.

THE WALL ENVELOPES HAVE BEEN COMBINED FROM THE STRUCTURE AND ROADWAY PLANS AND ARE TO BE VERIFIED PRIOR TO BEGINNING DESIGN.

BEFORE BEGINNING MSE WALL DESIGN FOR RETAINING WALLS, SURVEY WALL LOCATIONS AND SUBMIT A REVISED WALL PROFILE VIEW (WALL ENVELOPE) FOR REVIEW. DO NOT START WALL DESIGN OR CONSTRUCTION UNTIL THE REVISED WALL ENVELOPES ARE ACCEPTED.

VERIFY PROPOSED FINAL WALL ENVELOPE RETAINS END BENT SLOPES ADEQUATELY WITHOUT IMPACTING THE RAILROAD AGREEMENTS.

DESIGN RETAINING WALLS FOR THE FOLLOWING:
1) H = DESIGN HEIGHT + EMBEDMENT
2) DESIGN LIFE = 100 YEARS
3) MAXIMUM FACTORED VERTICAL STRESS ON FOUNDATION MATERIAL = ~~6200~~ 8500 LB/SF
4) MINIMUM REINFORCEMENT LENGTH (L) = 6 FT. OR 0.85 X HT., WHICHEVER IS GREATER
5) MINIMUM EMBEDMENT ELEVATION = 2 FT OR AS SHOWN ON ENVELOPES
6) AGGREGATE PARAMETERS:

AGGREGATE TYPE*	UNIT WEIGHT (γ) LB/CF	FRICTION ANGLE (ϕ) DEGREES	COHESION (c) LB/SF
COARSE	~~110~~	~~38~~	~~0~~
~~FINE~~	~~125~~	~~34~~	~~0~~

DUE TO WALL HEIGHT, FINE AGGREGATE IS NOT ALLOWED IN THE REINFORCED ZONE.

*SEE MSE RETAINING WALLS PROVISION FOR COARSE AND FINE AGGREGATE MATERIAL REQUIREMENTS.

7) IN-SITU ASSUMED MATERIAL PARAMETERS:

MATERIAL TYPE	UNIT WEIGHT (γ) LB/CF	FRICTION ANGLE (ϕ) DEGREES	COHESION (c) LB/SF
BACKFILL	120	32	0
FOUNDATION	~~120~~ 110	~~32~~ 22	~~0~~ 750

DESIGN RETAINING WALLS FOR A LIVE LOAD (TRAFFIC) SURCHARGE.

CONSTRUCTION OF RETAINING WALLS AT END BT. #1 AND #2 AND BRIDGE END BENT CONSTRUCTION WILL HAVE TO BE COORDINATED WITH EACH OTHER TO ENSURE PROPER INSTALLATION.

DESIGN REINFORCEMENT CONNECTED TO END BENT CAPS FOR FACTORED LOAD AND LENGTH OF REINFORCEMENT IN ACTIVE ZONE (L_a) SHOWN. CAST REINFORCEMENT CONNECTORS INTO CAP BACKWALL FOR END BENTS 1 AND 2, LEFT AND RIGHT LANES. MAINTAIN A CLEARANCE OF AT LEAST 3" BETWEEN CONNECTORS AND REINFORCING STEEL IN CAP.

FOUNDATIONS FOR SIGNS, LIGHTING or SIGNALS MAY BE LOCATED BEHIND RETAINING WALLS AND MAY INTERFERE WITH REINFORCEMENT. BEFORE BEGINNING MSE WALL CONSTRUCTION, SUBMIT PROPOSED CONSTRUCTION METHODS FOR THESE FOUNDATIONS FOR APPROVAL.

EXISTING OR FUTURE OBSTRUCTIONS SUCH AS FOUNDATIONS, GUARDRAIL, FENCE OR HANDRAIL POSTS, PAVEMENTS, PIPES, INLETS OR UTILITIES MAY INTERFERE WITH REINFORCEMENT FOR RETAINING WALLS.

FOUNDATIONS FOR END BENTS WILL INTERFERE WITH REINFORCEMENT FOR RETAINING WALLS. SEE "FOUNDATION LAYOUT" SHEET FOR FOUNDATION LOCATIONS.

DO NOT PLACE LEVELING PAD CONCRETE, AGGREGATE OR REINFORCEMENT FOR RETAINING WALLS UNTIL EXCAVATION DIMENSIONS AND FOUNDATION MATERIAL ARE APPROVED.

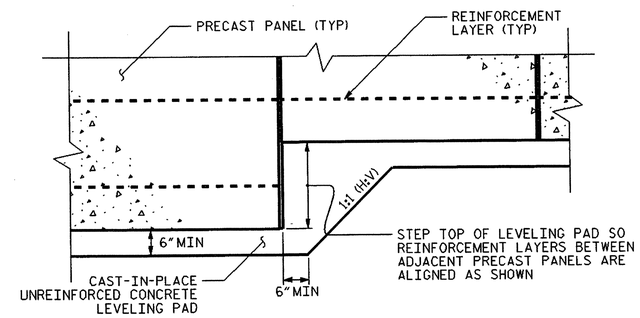

PRECAST CONCRETE PANELS

LEVELING PAD STEP DETAILS

PREPARED BY: EJS	DATE: 12/13
REVIEWED BY: SCC	DATE: 2/14

PROJECT NO.: R-2707B
CLEVELAND **COUNTY**
STATION: 252+73.29 -L-
SHEET 4 OF 4

GEOTECHNICAL ENGINEERING UNIT
☐ EASTERN REGIONAL OFFICE
☒ WESTERN REGIONAL OFFICE
☐ CONTRACT OFFICE
STATE OF NORTH CAROLINA
DEPARTMENT OF TRANSPORTATION
RALEIGH

MSE RETAINING WALL

REVISIONS							SHEET NO.
NO.	BY	DATE	NO.	BY	DATE		W-4
1	SCC	4/9/14	3				TOTAL SHEETS
2			4				4

STANDARD NOTES

DESIGN DATA:

SPECIFICATIONS	A.A.S.H.T.O. (CURRENT)
LIVE LOAD	SEE PLANS
IMPACT ALLOWANCE	SEE A.A.S.H.T.O.
STRESS IN EXTREME FIBER OF	
STRUCTURAL STEEL - AASHTO M270 GRADE 36	20,000 LBS. PER SQ. IN.
- AASHTO M270 GRADE 50W	27,000 LBS. PER SQ. IN.
- AASHTO M270 GRADE 50	27,000 LBS. PER SQ. IN.
REINFORCING STEEL IN TENSION	
GRADE 60	24,000 LBS. PER SQ. IN.
CONCRETE IN COMPRESSION	1,200 LBS. PER SQ. IN.
CONCRETE IN SHEAR	SEE A.A.S.H.T.O.
STRUCTURAL TIMBER - TREATED OR	
UNTREATED - EXTREME FIBER STRESS	1,800 LBS. PER SQ. IN.
COMPRESSION PERPENDICULAR TO GRAIN OF TIMBER	375 LBS. PER SQ. IN.
EQUIVALENT FLUID PRESSURE OF EARTH	30 LBS. PER CU. FT. (MINIMUM)

MATERIAL AND WORKMANSHIP:

EXCEPT AS MAY OTHERWISE BE SPECIFIED ON PLANS OR IN THE SPECIAL PROVISIONS, ALL MATERIAL AND WORKMANSHIP SHALL BE IN ACCORDANCE WITH THE 2012 "STANDARD SPECIFICATIONS FOR ROADS AND STRUCTURES" OF THE N. C. DEPARTMENT OF TRANSPORTATION.

STEEL SHEET PILING FOR PERMANENT OR TEMPORARY APPLICATIONS SHALL BE HOT ROLLED.

CONCRETE:

UNLESS OTHERWISE REQUIRED ON PLANS, CLASS A CONCRETE SHALL BE USED FOR ALL PORTIONS OF ALL STRUCTURES WITH THE EXCEPTION THAT: CLASS AA CONCRETE SHALL BE USED IN BRIDGE SUPERSTRUCTURES, ABUTMENT BACKWALLS, AND APPROACH SLABS; AND CLASS B CONCRETE SHALL BE USED FOR SLOPE PROTECTION AND RIP RAP.

CONCRETE CHAMFERS:

UNLESS OTHERWISE NOTED ON THE PLANS, ALL EXPOSED CORNERS ON STRUCTURES SHALL BE CHAMFERED 3/4" WITH THE FOLLOWING EXCEPTIONS: TOP CORNERS OF CURBS MAY BE ROUNDED TO 1-1/2" RADIUS WHICH IS BUILT INTO CURB FORMS; CORNERS OF TRANSVERSE FLOOR EXPANSION JOINTS SHALL BE ROUNDED WITH A 1/4" FINISHING TOOL UNLESS OTHERWISE REQUIRED ON PLANS; AND CORNERS OF EXPANSION JOINTS IN THE ROADWAY FACES AND TOPS OF CURBS AND SIDEWALKS SHALL BE ROUNDED TO A 1/4" RADIUS WITH A FINISHING STONE OR TOOL UNLESS OTHERWISE REQUIRED ON PLANS.

DOWELS:

DOWELS WHEN INDICATED ON PLANS AS FOR CULVERT EXTENSIONS, SHALL BE EMBEDDED AT LEAST 12" INTO THE OLD CONCRETE AND GROUTED INTO PLACE WITH 1:2 CEMENT MORTAR.

ALLOWANCE FOR DEAD LOAD DEFLECTION, SETTLEMENT, ETC. IN CASTING SUPERSTRUCTURES:

BRIDGES SHALL BE BUILT ON THE GRADE OR VERTICAL CURVE SHOWN ON PLANS. SLABS, CURBS AND PARAPETS SHALL CONFORM TO THE GRADE OR CURVE.

ALL DIMENSIONS WHICH ARE GIVEN IN SECTION AND ARE AFFECTED BY DEAD LOAD DEFLECTIONS ARE DIMENSIONS AT CENTER LINE OF BEARING UNLESS OTHERWISE NOTED ON PLANS. IN SETTING FORMS FOR STEEL BEAM BRIDGES AND PRESTRESSED CONCRETE GIRDER BRIDGES, ADJUSTMENTS SHALL BE MADE DUE TO THE DEAD LOAD DEFLECTIONS FOR THE ELEVATIONS SHOWN. WHERE BLOCKS ARE SHOWN OVER BEAMS FOR BUILDING UP TO THE SLAB, THE VERTICAL DIMENSIONS OF THE BLOCKS SHALL BE ADJUSTED BETWEEN BEARINGS TO COMPENSATE FOR DEAD LOAD DEFLECTIONS, VERTICAL CURVE ORDINATE, AND ACTUAL BEAM CAMBER. WHERE BOTTOM OF SLAB IS IN LINE WITH BOTTOM OF TOP FLANGES, DEPTH OF SLAB BETWEEN BEARINGS SHALL BE ADJUSTED TO COMPENSATE FOR DEAD LOAD DEFLECTION, VERTICAL CURVE ORDINATE, AND ACTUAL BEAM CAMBER.

IN SETTING FALSEWORK AND FORMS FOR REINFORCED CONCRETE SPANS, AN ALLOWANCE SHALL BE MADE FOR DEAD LOAD DEFLECTIONS, SETTLEMENT OF FALSEWORK, AND PERMANENT CAMBER WHICH SHALL BE PROVIDED FOR IN ADDITION TO THE ELEVATIONS SHOWN. AFTER REMOVAL OF THE FALSEWORK, THE FINISHED STRUCTURES SHALL CONFORM TO THE PROFILE AND ELEVATIONS SHOWN ON THE PLANS AND CONSTRUCTION ELEVATIONS FURNISHED BY THE ENGINEER.

DETAILED DRAWINGS FOR FALSEWORK OR FORMS FOR BRIDGE SUPERSTRUCTURE AND ANY STRUCTURE OR PARTS OF A STRUCTURE AS NOTED ON THE PLANS SHALL BE SUBMITTED TO THE ENGINEER FOR APPROVAL BEFORE CONSTRUCTION OF THE FALSEWORK OR FORMS IS STARTED.

REINFORCING STEEL:

ALL REINFORCING STEEL SHALL BE DEFORMED. DIMENSIONS RELATIVE TO PLACEMENT OF REINFORCING ARE TO CENTERS OF BARS UNLESS OTHERWISE INDICATED IN THE PLANS. DIMENSIONS ON BAR DETAILS ARE TO CENTERS OF BARS OR ARE OUT TO OUT AS INDICATED ON PLANS.

WIRE BAR SUPPORTS SHALL BE PROVIDED FOR REINFORCING STEEL WHERE INDICATED ON THE PLANS. WHEN BAR SUPPORT PIECES ARE PLACED IN CONTINUOUS LINES, THEY SHALL BE SO PLACED THAT THE ENDS OF THE SUPPORTING WIRES SHALL BE LAPPED TO LOCK LEGS ON ADJOINING PIECES.

STRUCTURAL STEEL:

AT THE CONTRACTOR'S OPTION, HE MAY SUBSTITUTE 7/8" Ø SHEAR STUDS FOR THE 3/4" Ø STUDS SPECIFIED ON THE PLANS. THIS SUBSTITUTION SHALL BE MADE AT THE RATE OF 3 - 7/8" Ø STUDS FOR 4 - 3/4" Ø STUDS, AND STUD SPACING CHANGES SHALL BE MADE AS NECESSARY TO PROVIDE THE SAME EQUIVALENT NUMBER OF 7/8" Ø STUDS ALONG THE BEAM AS SHOWN FOR 3/4" Ø STUDS BASED ON THE RATIO OF 3 - 7/8" Ø STUDS FOR 4 - 3/4" Ø STUDS. STUDS OF THE LENGTH SPECIFIED ON THE PLANS MUST BE PROVIDED. THE MAXIMUM SPACING SHALL BE 2'-0".

EXCEPT AT THE INTERIOR SUPPORTS OF CONTINUOUS BEAMS WHERE THE COVER PLATE IS IN CONTACT WITH BEARING PLATE, THE CONTRACTOR MAY, AT HIS OPTION, SUBSTITUTE FOR THE COVER PLATES DESIGNATED ON THE PLANS COVER PLATES OF THE EQUIVALENT AREA PROVIDED THESE PLATES ARE AT LEAST 5/16" IN THICKNESS AND DO NOT EXCEED A WIDTH EQUAL TO THE FLANGE WIDTH LESS 2" OR A THICKNESS EQUAL TO 2 TIMES THE FLANGE THICKNESS. THE SIZE OF FILLET WELDS SHALL CONFORM TO THE REQUIREMENTS OF THE CURRENT ANSI/AASHTO/AWS "BRIDGE WELDING CODE". ELECTROSLAG WELDING WILL NOT BE PERMITTED.

WITH THE SOLE EXCEPTION OF EDGES AT SURFACES WHICH BEAR ON OTHER SURFACES, ALL SHARP EDGES AND ENDS OF SHAPES AND PLATES SHALL BE SLIGHTLY ROUNDED BY SUITABLE MEANS TO A RADIUS OF APPROXIMATELY 1/16 INCH OR EQUIVALENT FLAT SURFACE AT A SUITABLE ANGLE PRIOR TO PAINTING, GALVANIZING, OR METALLIZING.

HANDRAILS AND POSTS:

METAL STANDARDS AND FACES OF THE CONCRETE END POSTS FOR THE METAL RAIL SHALL BE SET NORMAL TO THE GRADE OF THE CURB, UNLESS OTHERWISE SHOWN ON PLANS. THE METAL RAIL AND TOPS OF CONCRETE POSTS USED WITH THE ALUMINUM RAIL SHALL BE BUILT PARALLEL TO THE GRADE OF THE CURB.

METAL HANDRAILS SHALL BE IN ACCORDANCE WITH THE PLANS. RAILS SHALL BE AS MANUFACTURED FOR BRIDGE RAILING. CASTINGS SHALL BE OF A UNIFORM APPEARANCE. FINS AND OTHER DEFORMATIONS RESULTING FROM CASTING OR OTHERWISE SHALL BE REMOVED IN A MANNER SO THAT A UNIFORM COLORING OF THE COMPLETED CASTING SHALL BE OBTAINED. CASTINGS WITH DISCOLORATIONS OR OF NON-UNIFORM COLORING WILL NOT BE ACCEPTED. CERTIFIED MILL REPORTS ARE REQUIRED FOR METAL RAILS AND POSTS.

SPECIAL NOTES:

GENERALLY, IN CASE OF DISCREPANCY, THIS STANDARD SHEET OF NOTES SHALL GOVERN OVER THE SPECIFICATIONS, BUT THE REMAINDER OF THE PLANS SHALL GOVERN OVER NOTES HEREON, AND SPECIAL PROVISIONS SHALL GOVERN OVER ALL. SEE SPECIFICATIONS ARTICLE 105-4.

ENGLISH

JANUARY, 1990