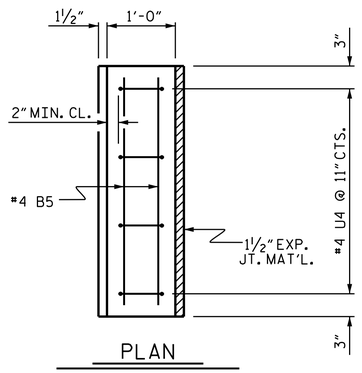

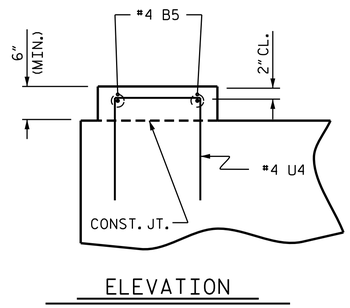

LATERAL GUIDE DETAILS

(LEFT LATERAL GUIDE SHOWN, RIGHT SIDE SIMILAR)

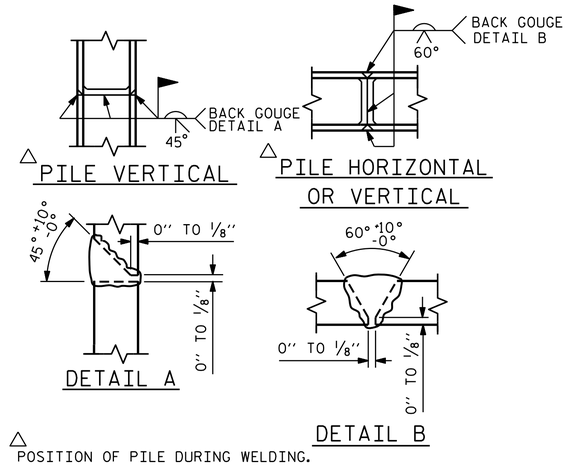

△ POSITION OF PILE DURING WELDING.

PILE SPLICE DETAILS

BAR TYPES

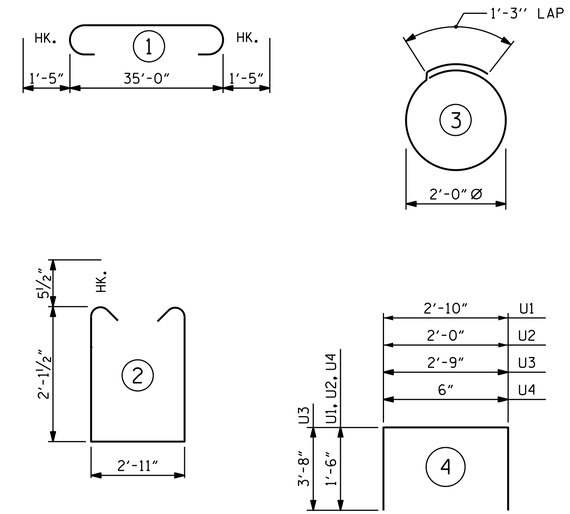

ALL BAR DIMENSIONS ARE OUT TO OUT.

BILL OF MATERIAL

FOR ONE BENT

BAR	NO.	SIZE	TYPE	LENGTH	WEIGHT
B1	4	#10	1	37'-10"	651
B2	4	#10	STR	35'-2"	605
B3	4	#5	STR	35'-2"	147
B4	8	#4	STR	18'-10"	101
B5	13	#4	STR	2'-11"	25
D1	44	#6	STR	1'-6"	99
S1	39	#5	2	8'-1"	329
S2	16	#4	3	7'-7"	81
U1	4	#4	4	5'-10"	16
U2	6	#4	4	5'-0"	20
U3	2	#9	4	10'-1"	69
U4	8	#4	4	3'-6"	19

REINFORCING STEEL (FOR ONE BENT) 2162 LBS

CLASS A CONCRETE BREAKDOWN (FOR ONE BENT)

POUR #1 (CAP)	10.7 C.Y.
POUR #2 (LATERAL GUIDES)	0.1 C.Y.
TOTAL CLASS A CONCRETE	10.8 C.Y.

HP 14 X 73 GALVANIZED STEEL PILES (FOR ONE BENT)

No. 8	LIN. FT. 440
PILE REDRIVES	4 EACH
STEEL PILE POINTS	8 EACH

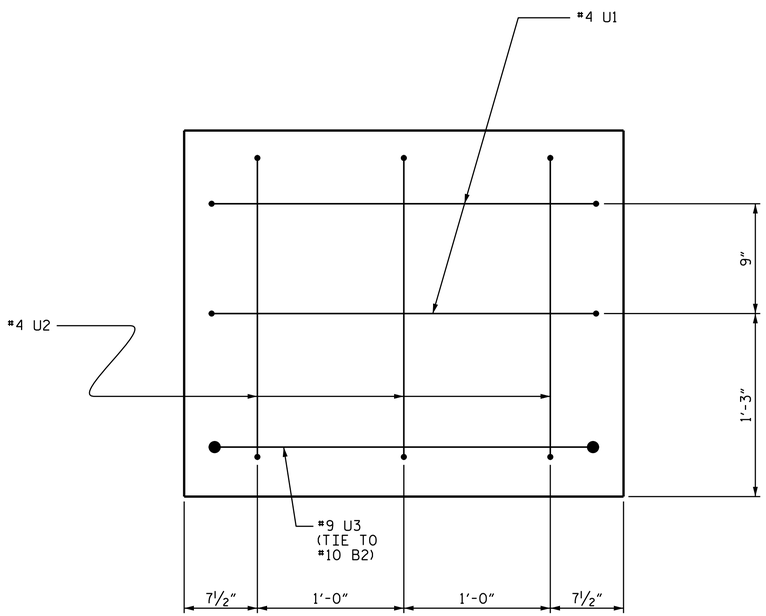

END OF CAP VIEW

(TYPICAL BOTH ENDS)

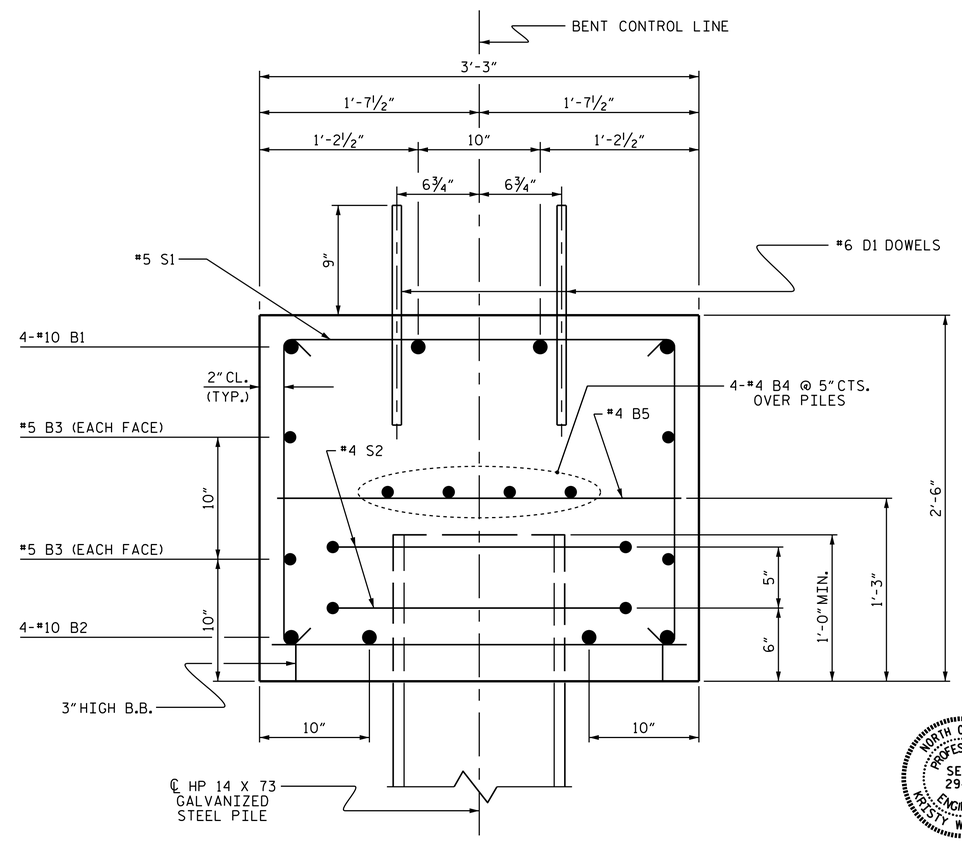

SECTION A-A

NORTH CAROLINA PROFESSIONAL SEAL 29441 ENGINEER KRISTY W. ALFORD

DocuSigned by: Kristy Alford 25FC5709E78142F...

12/18/2013

PROJECT NO. B-4475

COLUMBUS COUNTY

STATION: 15+66.00 -L-

SHEET 2 OF 2

STATE OF NORTH CAROLINA
DEPARTMENT OF TRANSPORTATION
RALEIGH

SUBSTRUCTURE

BENT No. 1

REVISIONS						SHEET NO.
NO.	BY:	DATE:	NO.	BY:	DATE:	S-14
1			3			TOTAL SHEETS
2			4			16

DRAWN BY : Fr. Lea DATE : 5-14-2012
CHECKED BY : A.C. OUTLAW DATE : 12/12

DRAWN BY : DGE 05/10
CHECKED BY : MKT 05/10

20-NOV-2013 11:25
N:\Structures\Plans\Sub_Draw\B4475_SD_B*.dgn
kalford

STD. NO. 14" HP_BT_33_90S_<60'