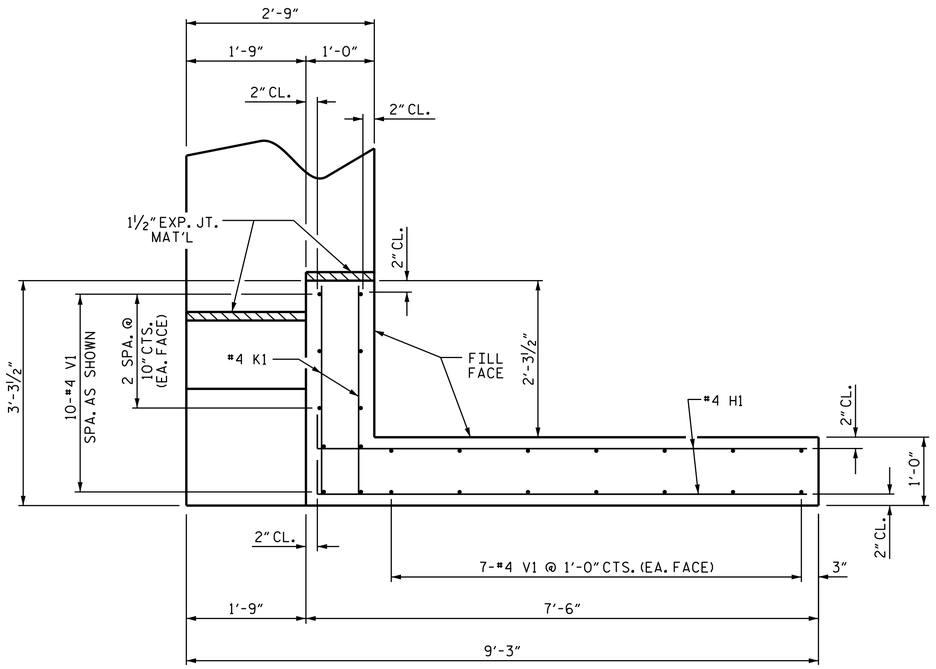

PLAN OF WING (W1)

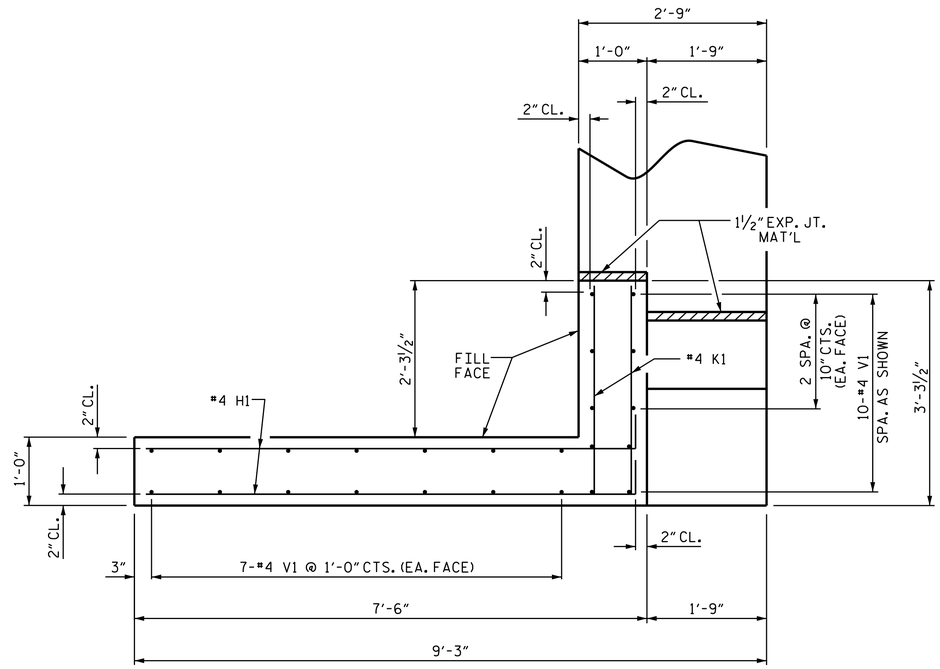

PLAN OF WING (W2)

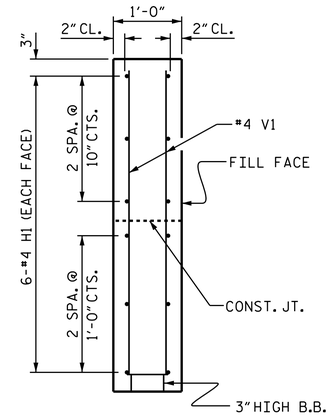

SECTION X-X

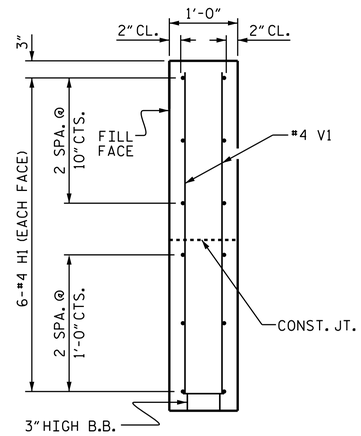

SECTION Y-Y

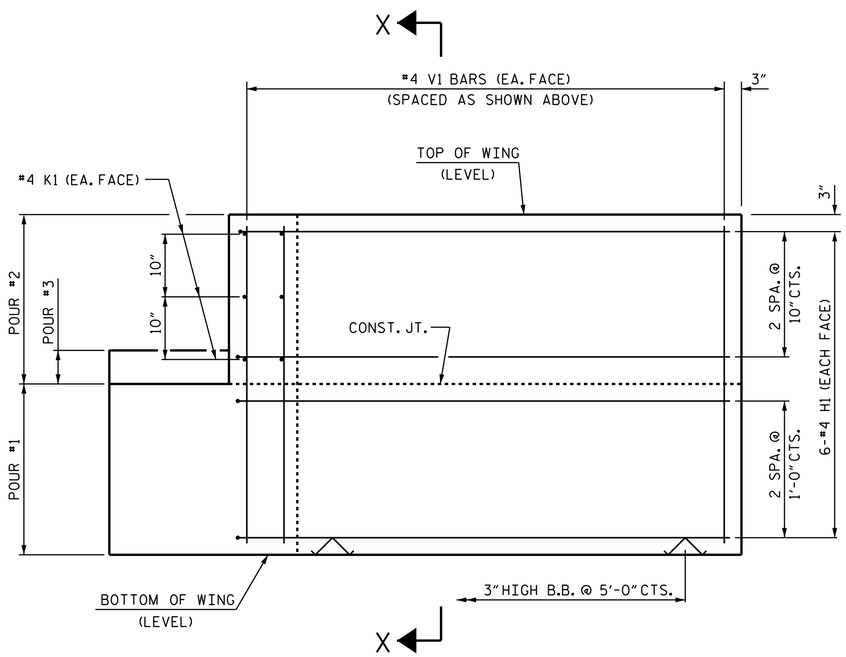

ELEVATION OF WING (W1)

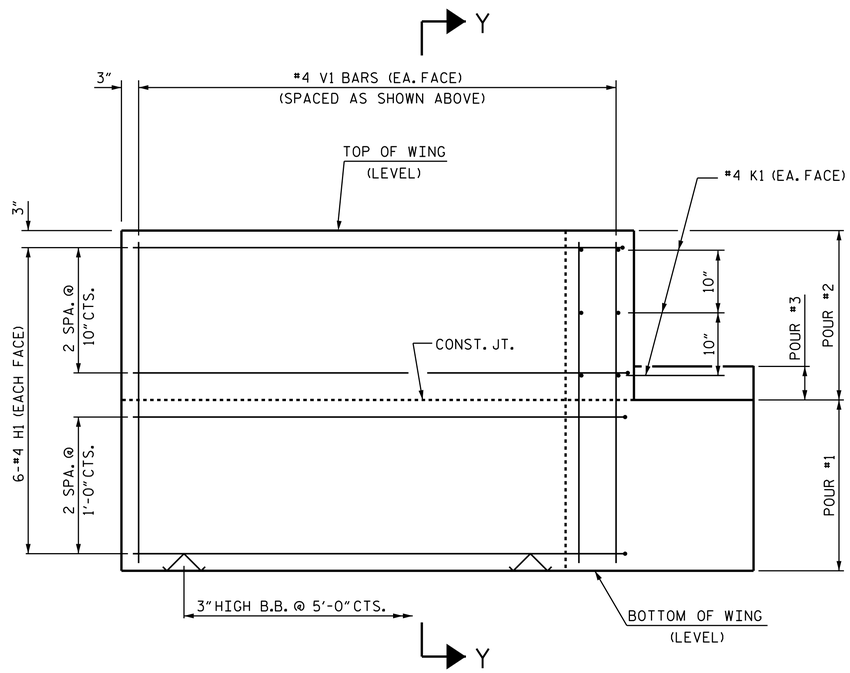

ELEVATION OF WING (W2)

WING DETAILS

PROJECT NO. B-4475

COLUMBUS COUNTY

STATION: 15+66.00 -L-

SHEET 3 OF 4

STATE OF NORTH CAROLINA
DEPARTMENT OF TRANSPORTATION
RALEIGH

SUBSTRUCTURE

END BENT
WING DETAILS

NORTH CAROLINA PROFESSIONAL SEAL 29441 ENGINEER KRISTY W. ALFORD

DocuSigned by: Kristy Alford
12/18/2013

REVISIONS						
NO.	BY:	DATE:	NO.	BY:	DATE:	
1			3			
2			4			

SHEET NO. S-11

TOTAL SHEETS 16

ASSEMBLED BY : Fr. Lea	DATE : 5-14-2012	
CHECKED BY : A.C. OUTLAW	DATE : 12/12	
DRAWN BY : DGE 02/10		
CHECKED BY : MKT 02/10		

20-NOV-2013 11:18
N:\Structures\Plans\Sub_Draw\B4475_SD_E*.dgn
kalford

STD. NO. EB_33_90S