NOTES

STIRRUPS IN CAP MAY BE SHIFTED AS NECESSARY TO CLEAR DOWELS.

THE LATERAL GUIDES ARE NOT TO BE POURED UNTIL AFTER THE CORED SLAB UNITS ARE IN PLACE.

★ INVERT ALTERNATE STIRRUPS.

GALVANIZE THE TOP OF EACH INTERIOR BENT PILE A MINIMUM OF 37 FEET. GALVANIZE IN ACCORDANCE WITH SECTION 1076 OF THE STANDARD SPECIFICATIONS.

THE CONTRACTOR HAS THE OPTION TO OMIT THE LATERAL GUIDE IF APPROVED BY THE ENGINEER.

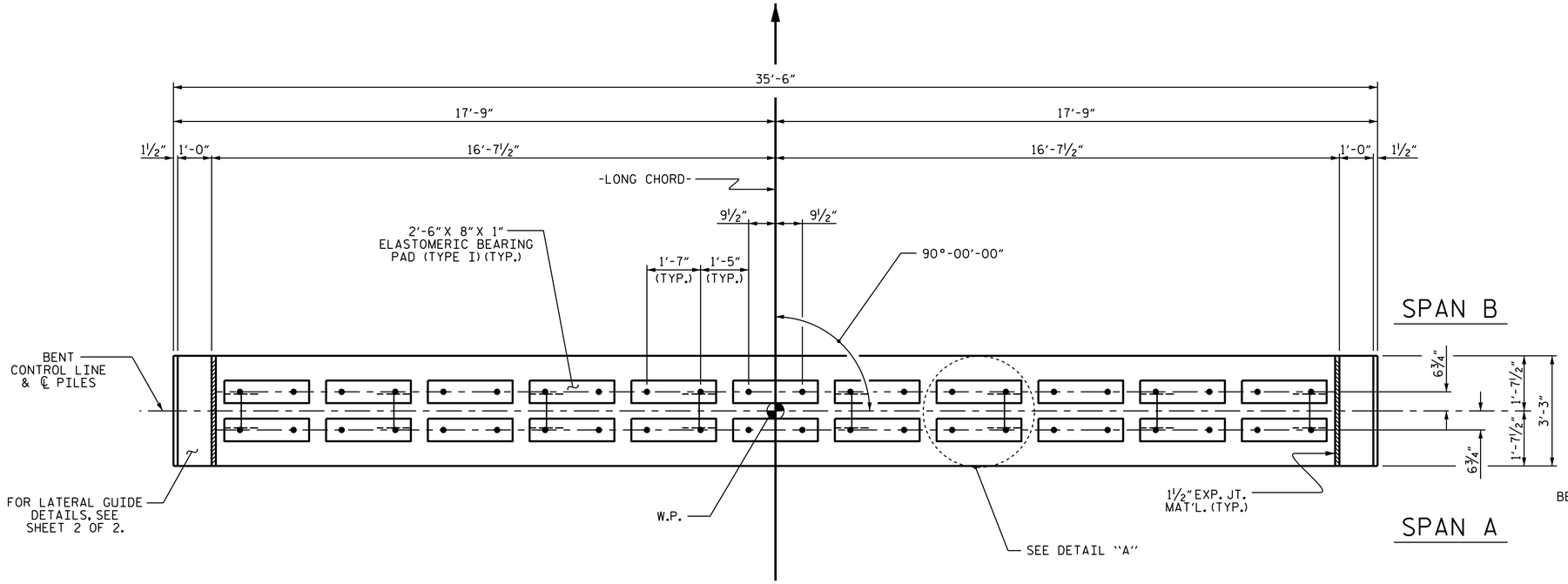

PLAN

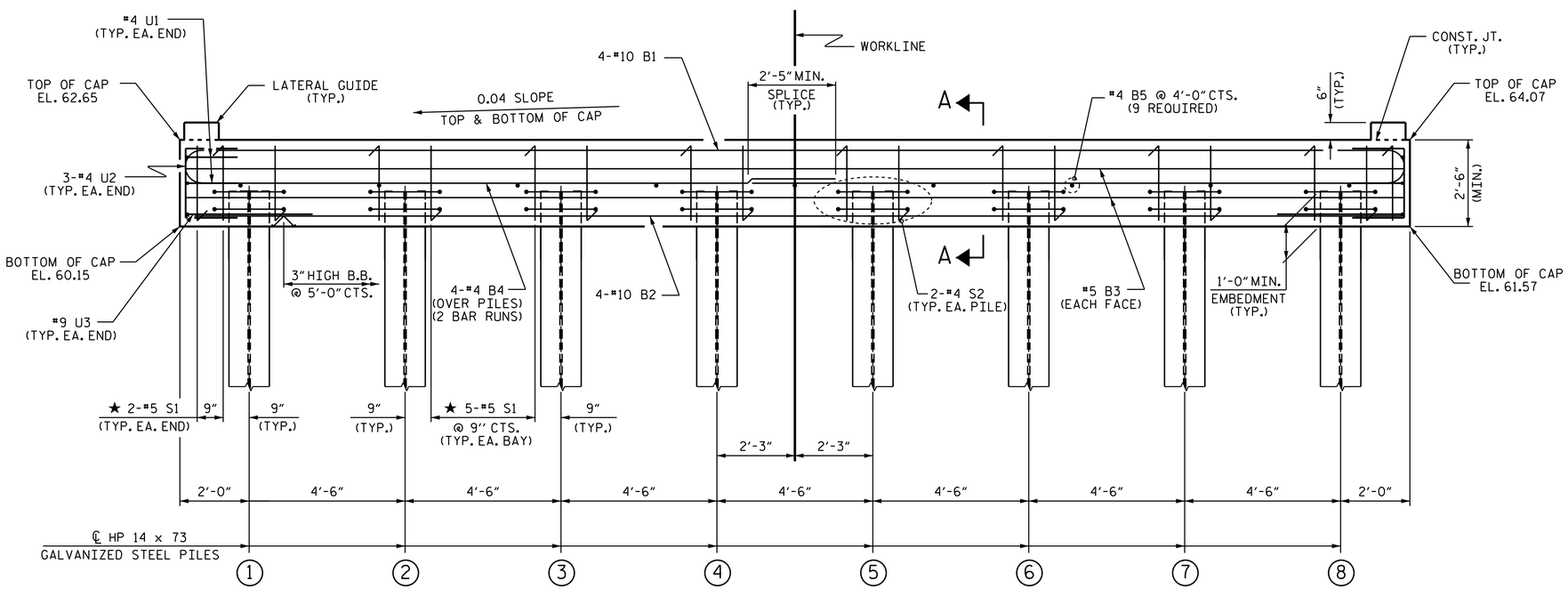

ELEVATION

FOR SECTION A-A, SEE SHEET 2 OF 2

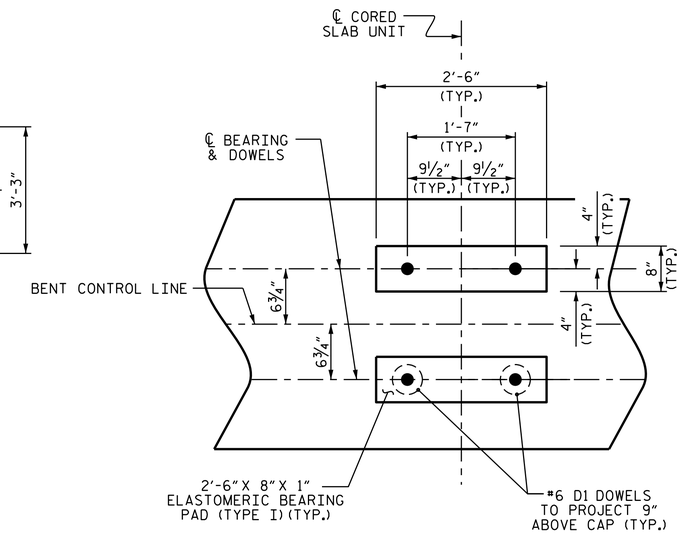

DETAIL "A"

(DIMENSIONS ARE TYPICAL EACH BEARING)

TOP OF PILE ELEVATIONS	
1	61.25
2	61.43
3	61.61
4	61.79
5	61.97
6	62.15
7	62.33
8	62.51

PROJECT NO. B-4475

COLUMBUS COUNTY

STATION: 15+66.00 -L-

SHEET 1 OF 2

STATE OF NORTH CAROLINA
DEPARTMENT OF TRANSPORTATION
RALEIGH

SUBSTRUCTURE

BENT No. 1

NORTH CAROLINA PROFESSIONAL SEAL 29441 ENGINEER KRISTY W. ALFORD

DocuSigned by: Kristy Alford
25FC57D6E7B142F...
12/18/2013

REVISIONS						SHEET NO.
NO.	BY:	DATE:	NO.	BY:	DATE:	S-13
1			3			TOTAL SHEETS
2			4			16

ASSEMBLED BY : Fr. Lea DATE : 5-14-2012
CHECKED BY : A.C. OUTLAW DATE : 12/12

DRAWN BY : DGE 05/10
CHECKED BY : MKT 05/10

20-NOV-2013 11:23
N:\Structures\Plans\Sub_Draw\B4475_SD_B*.dgn
kalford

STD. NO. 14" HP_BT_33_90S_<60'