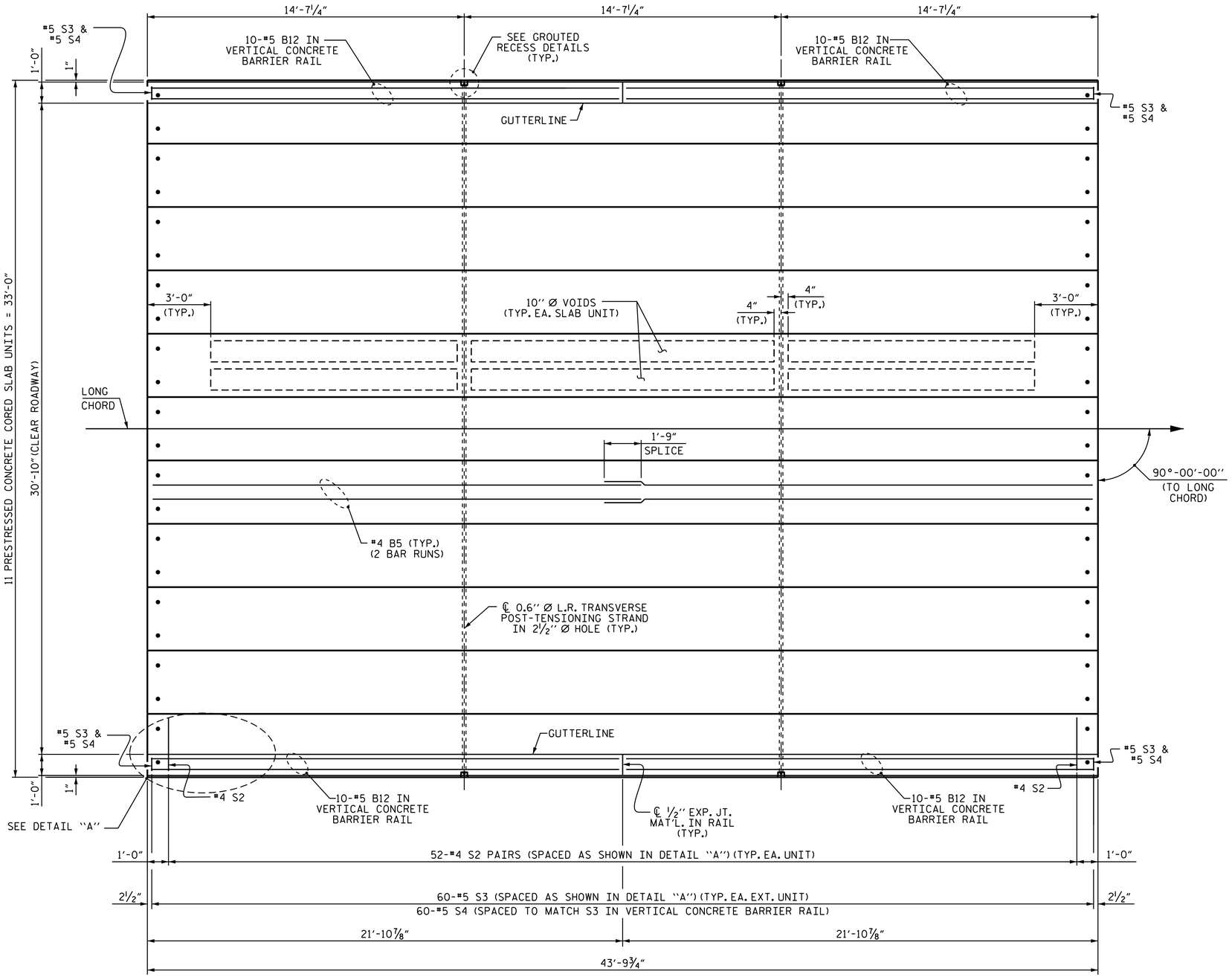

PLAN OF UNIT - SPANS A & B

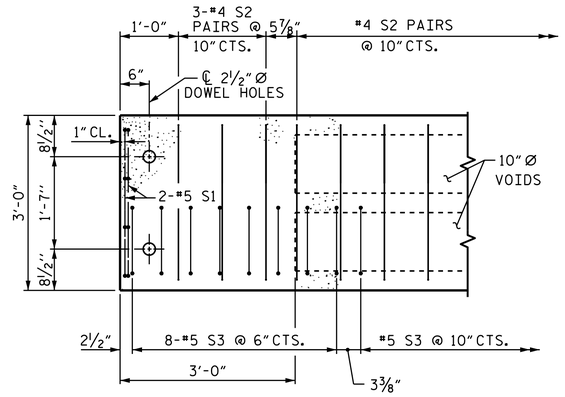

DETAIL "A"

NOTE: EXTERIOR UNIT SHOWN - INTERIOR UNIT SIMILAR EXCEPT OMIT #5 S3 BARS.

PROJECT NO. B-4475

COLUMBUS COUNTY

STATION: 15+66.00 -L-

SHEET 2 OF 4

STATE OF NORTH CAROLINA
DEPARTMENT OF TRANSPORTATION
RALEIGH

PLAN OF
SPANS A & B

NORTH CAROLINA PROFESSIONAL SEAL 29441 ENGINEER KRISTY W. ALFORD

DocuSigned by: Kristy Alford
12/18/2013

REVISIONS						SHEET NO.
NO.	BY:	DATE:	NO.	BY:	DATE:	S-6
1			3			TOTAL SHEETS
2			4			16

ASSEMBLED BY : Fr. Lea DATE : 5-3-2012
CHECKED BY : A.C. OUTLAW DATE : 5/12
ENG. OF RECORD : FR. LEA DATE : 10/30/13

20-NOV-2013 10:35
N:\Structures\Plans\Super_Draw\B4475_SD_CS.dgn
kalford