DocuSign Envelope ID: FBF8FAF5-572B-4B24-9704-5FA55CA7C11D

6/2/99

PROJECT REFERENCE NO.	SHEET NO.
B-4475	2

ROADWAY DESIGN ENGINEER
12/05/2013
NORTH CAROLINA PROFESSIONAL SEAL 16378 ENGINEER REKHA V. PATEL
DocuSigned by: Rekha V. Patel
F7B866566877841C...

PAVEMENT DESIGN ENGINEER
12/05/2013
NORTH CAROLINA PROFESSIONAL SEAL 22896 ENGINEER CLARK S. MORRISON
DocuSigned by: Clark S Morrison
066238016E4F400...

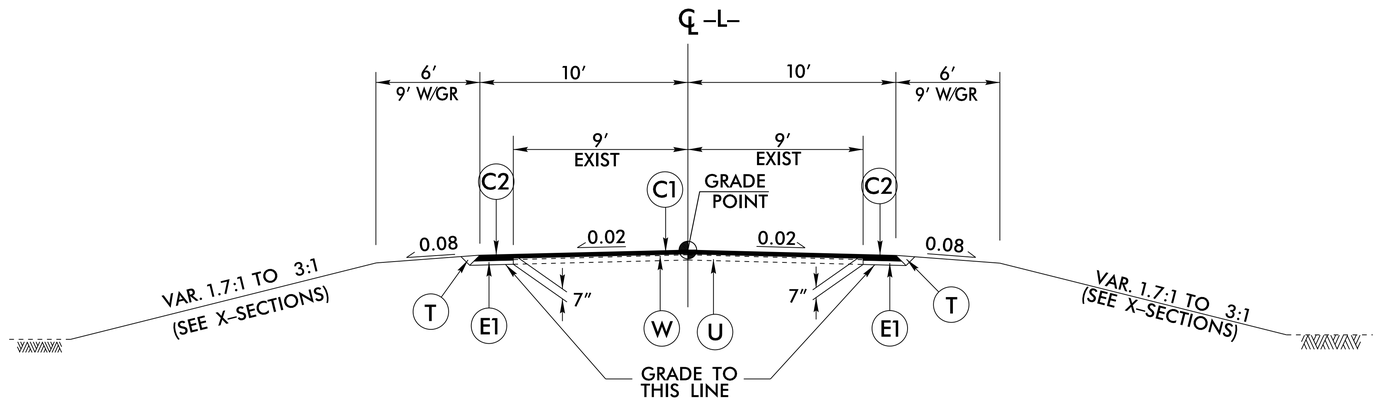

TYPICAL SECTION NO. 1

–L– STA. 14+00.00 TO STA. 14+50.00
–L– STA. 16+65.00 TO STA. 17+15.00

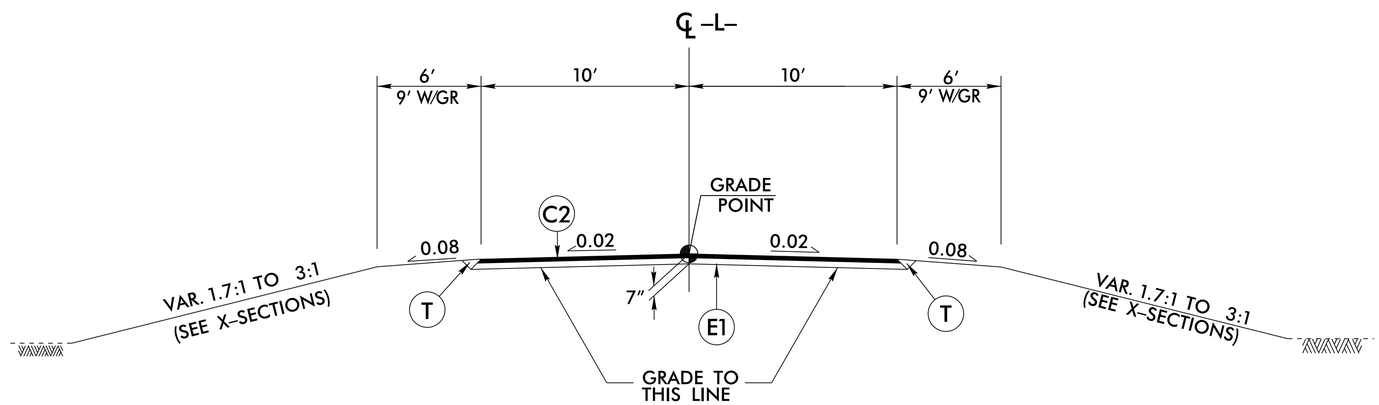

TYPICAL SECTION NO. 2

–L– STA. 14+50.00 TO STA. 15+21.00 (BEGIN BRIDGE)
–L– STA. 16+11.00 (END BRIDGE) TO STA. 16+65.00

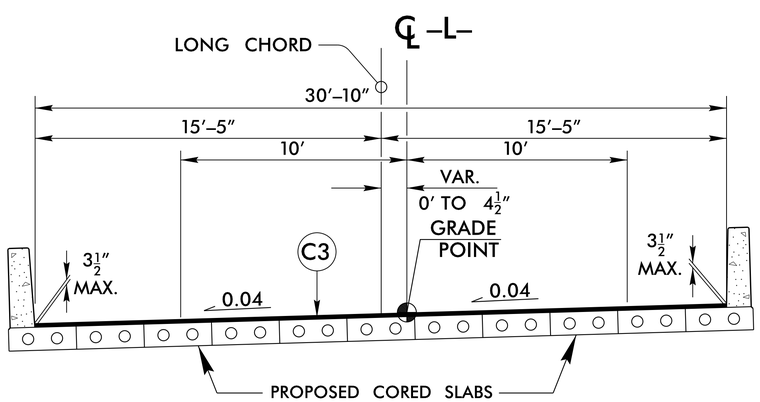

TYPICAL SECTION ON STRUCTURE (SEE STRUCTURE PLANS)

–L– STA. 15+21.00 (BEGIN BRIDGE) TO STA. 16+11.00 (END BRIDGE)

FINAL PAVEMENT SCHEDULE

C1	PROP. APPROX. 1 ½″ ASPHALT CONCRETE SURFACE COURSE, TYPE SF9.5A, AT AN AVERAGE RATE OF 165 LBS. PER SQ. YD.
C2	PROP. APPROX. 3″ ASPHALT CONCRETE SURFACE COURSE, TYPE SF9.5A, AT AN AVERAGE RATE OF 165 LBS. PER SQ. YD. IN EACH OF TWO LAYERS.
C3	PROP. VAR. DEPTH ASPHALT CONCRETE SURFACE COURSE, TYPE SF9.5A, AT AN AVERAGE RATE OF 110 LBS. PER SQ. YD. PER 1″ DEPTH. TO BE PLACED IN LAYERS NOT LESS THAN 1″ IN DEPTH OR GREATER THAN 1 ½″ IN DEPTH.
E1	PROP. APPROX. 4″ ASPHALT CONCRETE BASE COURSE, TYPE B25.0B, AT AN AVERAGE RATE OF 456 LBS. PER SQ. YD.
E2	PROP. VAR. DEPTH ASPHALT CONCRETE BASE COURSE, TYPE B25.0B, AT AN AVERAGE RATE OF 114 LBS. PER SQ. YD. PER 1″ DEPTH. TO BE PLACED IN LAYERS NOT LESS THAN 3″ IN DEPTH OR GREATER THAN 5 ½″ IN DEPTH.
R1	CONCRETE SHOULDER BERM GUTTER.
T	EARTH MATERIAL.
U	EXISTING PAVEMENT.
W	VARIABLE DEPTH ASPHALT PAVEMENT. (SEE WEDGING DETAIL)

NOTE: PAVEMENT EDGE SLOPES ARE 1:1 UNLESS SHOWN OTHERWISE.

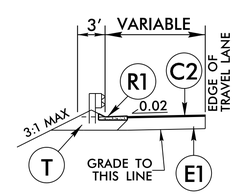

DETAIL SHOWING SHOULDER BERM GUTTER

–L– STA. 16+22.00 (END APPROACH SLAB) TO –L– STA. 16+40.00 (LT)

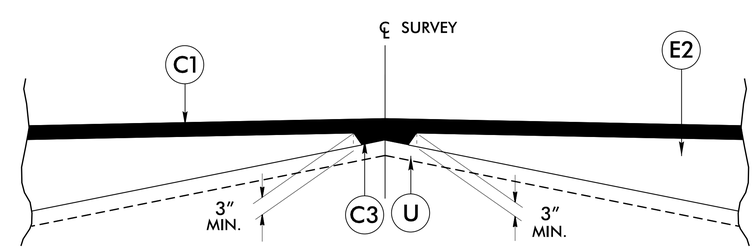

DETAIL SHOWING METHOD OF WEDGING

14-NOV-2013 09:33
R:\Roadway\Proj\b4475_rdy_typ.dgn
$$$$USERNAME$$$$