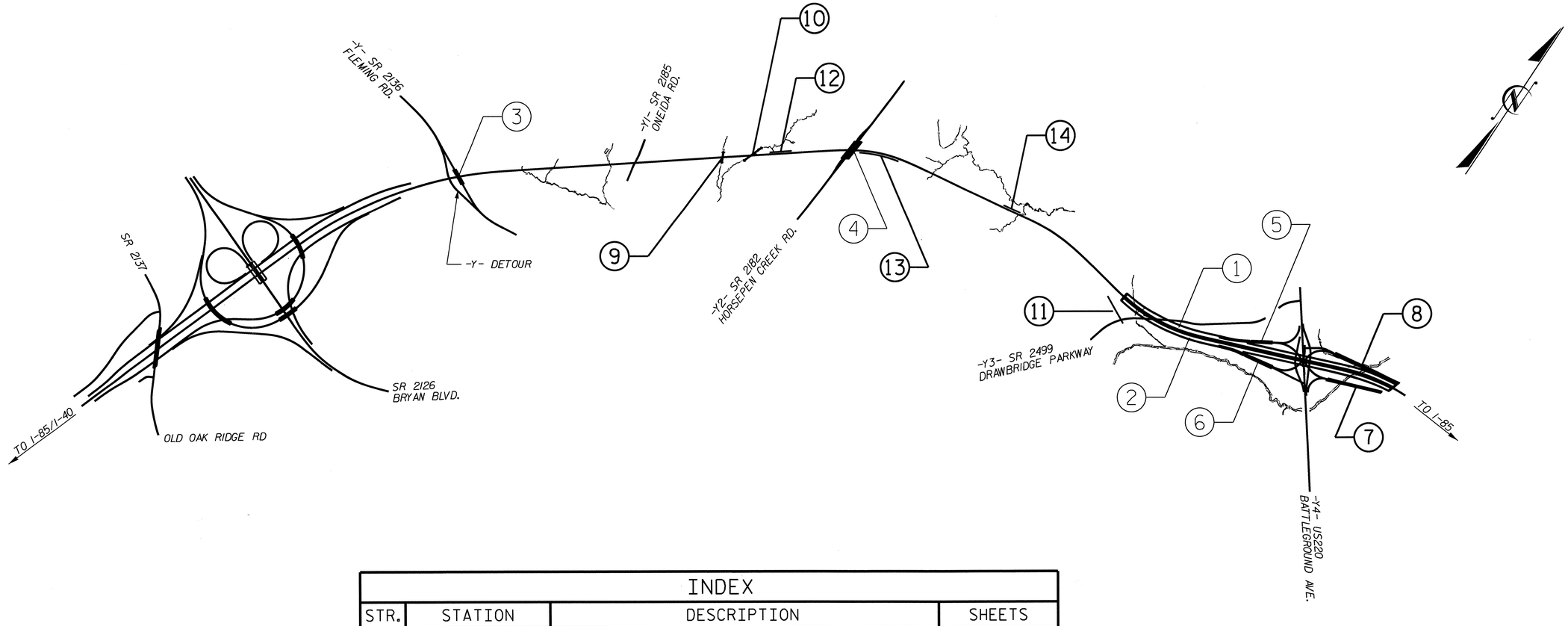

INDEX				
STR.	STATION	DESCRIPTION	SHEETS	
1	407+73.35 -L- (LT)	BRIDGE ON I-840 OVER BATTLEGROUND AVE. (LEFT LANE)	S-1 THRU S-247	PART 1
2	407+85.82 -L- (RT)	BRIDGE ON I-840 OVER BATTLEGROUND AVE. (RIGHT LANE)	S-248 THRU S-498	PART 2
3	274+26.98 -L-	BRIDGE ON SR 2136 (FLEMING RD.) OVER GWL	S-499 THRU S-535	PART 3
4	332+65.40 -L-	BRIDGE ON SR 2182 (HORSEPEN CREEK RD.) OVER GWL	S-536 THRU S-585	
5	6+01.72 -RPBY4-	BRIDGE ON RAMP B OVER WETLANDS	S-586 THRU S-628	
6	6+23.25 -RPCY4-	BRIDGE ON RAMP C OVER WETLANDS	S-629 THRU S-673	
7	9+53.33 -RPAY4-	BRIDGE ON RAMP A OVER HORSEPEN CREEK	S-674 THRU S-758	PART 4
8	9+75.28 -RPDY4-	BRIDGE ON RAMP D OVER HORSEPEN CREEK	S-759 THRU S-836	
9	313+42.00 -L-	SINGLE 10 X 7 CONCRETE BOX CULVERT	C-1 THRU C-8	
10	317+05.00 -L-	SINGLE 10 X 6 CONCRETE BOX CULVERT	C-9 THRU C-16	
11	373+29.30 -L-	SOUND BARRIER WALL	W-1 THRU W-3	
12	319+00 -L-	MSE RETAINING WALL	W-4 THRU W-9	
13	333+00 -L-	SOIL NAIL WALL		
14	357+25 -L-	MSE RETAINING WALL		

PART 4 OF 4

PROJECT NO. U-2524C
GUILFORD COUNTY
STATION:

STATE OF NORTH CAROLINA
DEPARTMENT OF TRANSPORTATION
RALEIGH

INDEX

REVISIONS					
NO.	BY:	DATE:	NO.	BY:	DATE:
1			3		
2			4		

DRAWN BY : W.D. CRUTCHER DATE : 6-13-13
CHECKED BY : D.S. STUTTS DATE : 6-21-13

12-JUL-2013 11:30
S:\PEF\Darrell\u2524c_title_index.dgn
dcrutcher

F.A. PROJECT NO. NHF-0708(52)

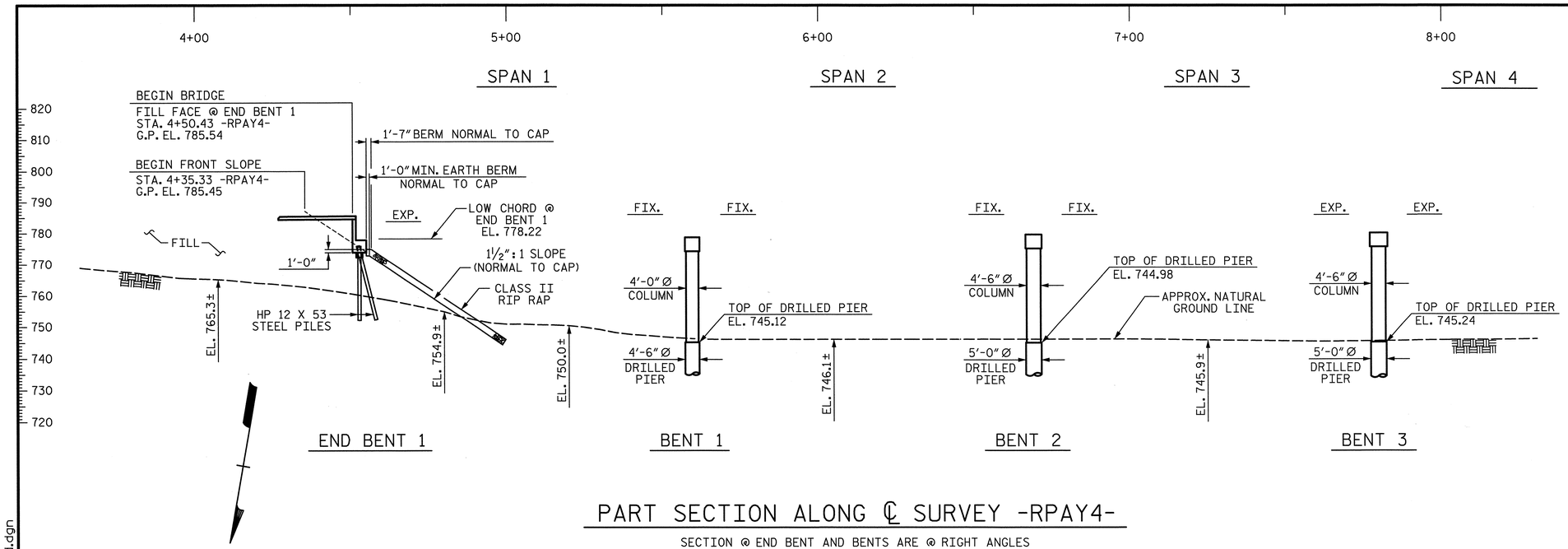

PART SECTION ALONG ℄ SURVEY -RPAY4-

SECTION @ END BENT AND BENTS ARE @ RIGHT ANGLES

HYDRAULIC DATA:

DESIGN DISCHARGE	= 6223 CFS
FREQUENCY OF DESIGN FLOOD	= 50 YEAR
DESIGN HIGH WATER ELEVATION	= 751.6
DRAINAGE AREA	= 16.3 SQ. MI.
BASE DISCHARGE (Q 100)	= 6242 CFS
BASE HIGH WATER ELEVATION	= 751.50

OVERTOPPING FLOOD DATA:

OVERTOPPING DISCHARGE	= -- CFS
FREQUENCY OF OVERTOPPING FLOOD	= >500+ YEAR
OVERTOPPING FLOOD ELEVATION	= --

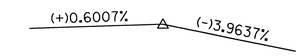

PVI STA. 11+00.00
EL. = 789.44'
VC = 690'

GRADE DATA -RPAY4-

HORIZONTAL CURVE DATA

PI STA. 1+71.48 -RPAY4-
Øs = 4°-46'-28.7"
Ls = 200.00'
LT = 133.38'
ST = 66.71'

PI STA. 3+51.09 -RPAY4-
Δ = 10°-45'-30.0" (LT.)
D = 4°-46'-28.7"
L = 225.32'
T = 112.99'
R = 1200.00'
e = 0.06
D.S. = 55.00 Mph
RUNOFF = 200.00'

PI STA. 5+30.13 -RPAY4-
Øs = 4°-46'-28.7"
Ls = 200.00'
LT = 133.38'
ST = 66.71'

I HEREBY CERTIFY THESE PLANS
ARE THE AS-BUILT PLANS

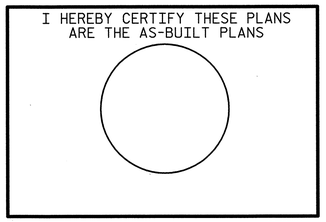

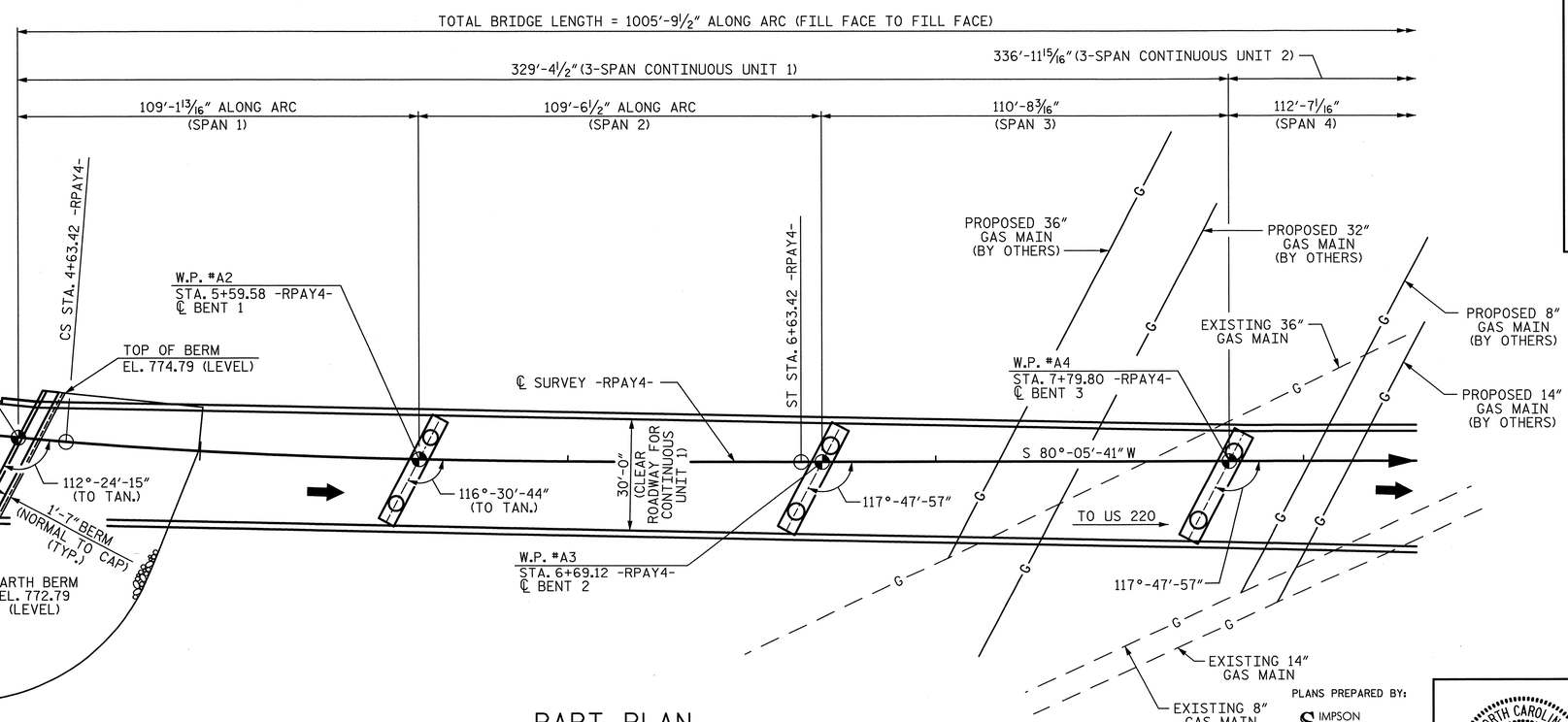

PART PLAN

PILES NOT SHOWN IN PLAN VIEW

END BENT AND ALL BENTS ARE PARALLEL

PROJECT NO. U-2524C

GUILFORD COUNTY

STATION: 9+53.33 -RPAY4-

SHEET 1 OF 8 BRIDGE NO. 1131

STATE OF NORTH CAROLINA
DEPARTMENT OF TRANSPORTATION
RALEIGH

GENERAL DRAWING
FOR BRIDGE ON RAMP A
OVER HORSEPEN CREEK
BETWEEN SR 2347
AND US 220
-RAMP A-

PLANS PREPARED BY:

SIMPSON ENGINEERS & ASSOCIATES
5640 Dillard Drive
Suite 200
Cary, NC 27518
(919) 852-0468
(919) 852-0598 (Fax)
www.simpsonengr.com
LICENSURE NO. C-2521

NORTH CAROLINA PROFESSIONAL ENGINEER SEAL 023908 MARK A. AVERETTE
6-5-2013

REVISIONS						SHEET NO.
NO.	BY:	DATE:	NO.	BY:	DATE:	S-674
1			3			TOTAL SHEETS
2			4			836

DRAWN BY: R. SEALEY DATE: 4-13
CHECKED BY: M. AVERETTE DATE: 4-13
DESIGN ENGINEER OF RECORD: M. AVERETTE DATE: 4-13

6/5/2013 3:42:49 PM G:\Projects\2011\U-2524 (Guilford Co)\Structures\Ramp A\Drawings\Final\U-2524_sd_rpa_gd.dgn

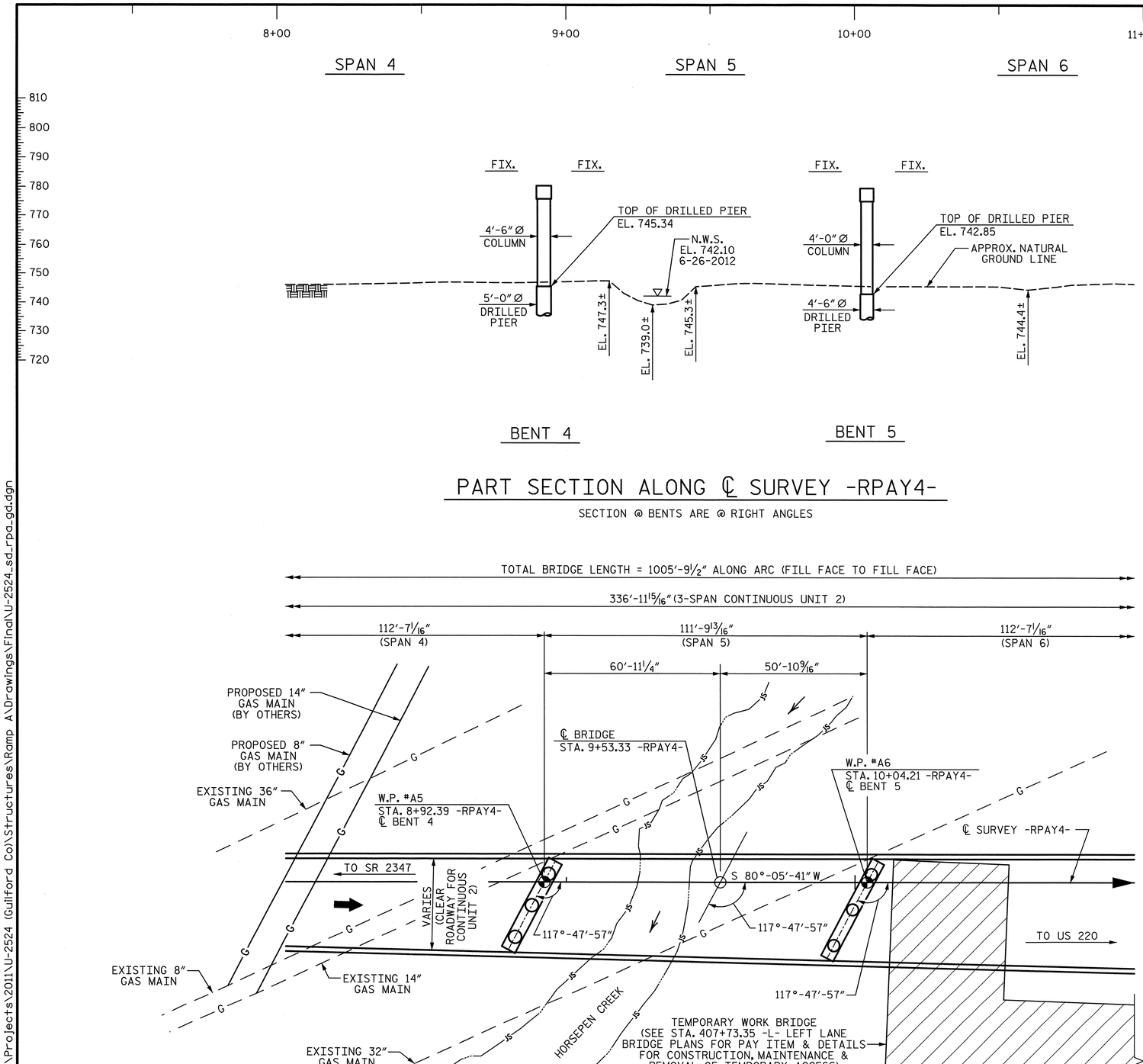

PART SECTION ALONG ℄ SURVEY -RPAY4-

SECTION @ BENTS ARE @ RIGHT ANGLES

PART PLAN

ALL BENTS ARE PARALLEL

PROJECT NO. U-2524C

GUILFORD COUNTY

STATION: 9+53.33 -RPAY4-

SHEET 2 OF 8 BRIDGE NO. 1131

STATE OF NORTH CAROLINA
DEPARTMENT OF TRANSPORTATION
RALEIGH

GENERAL DRAWING
FOR BRIDGE ON RAMP A
OVER HORSEPEN CREEK
BETWEEN SR 2347
AND US 220
-RAMP A-

REVISIONS						SHEET NO.
NO.	BY:	DATE:	NO.	BY:	DATE:	S-675
1			3			TOTAL SHEETS
2			4			836

PLANS PREPARED BY:
SIMPSON ENGINEERS & ASSOCIATES
5640 Dillard Drive
Suite 200
Cary, NC 27518
(919) 852-0468
(919) 852-0598 (Fax)
www.simpsonengr.com
LICENSURE NO. C-2521

NORTH CAROLINA PROFESSIONAL SEAL 023906 ENGINEER MARK A. AVERETTE
6-5-2013

DRAWN BY: R. SEALEY DATE: 4-13
CHECKED BY: M. AVERETTE DATE: 4-13
DESIGN ENGINEER OF RECORD: M. AVERETTE DATE: 4-13

6/5/2013 3:42:54 PM G:\Projects\2011\U-2524 (Guilford Co)\Structures\Ramp A\Drawings\Final\U-2524_sd_rpa_gd.dgn

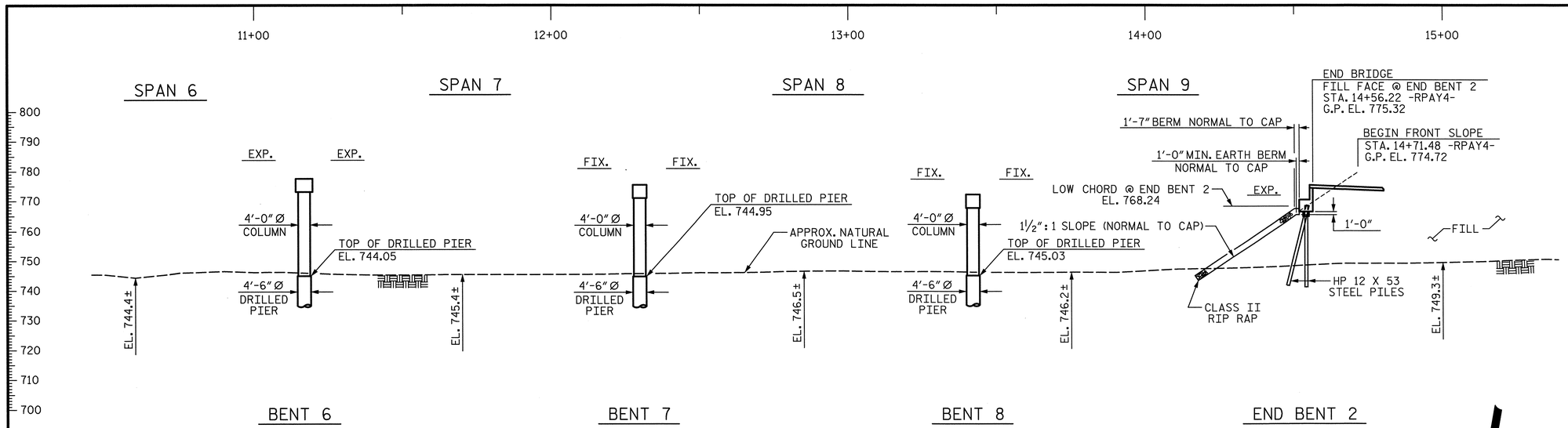

PART SECTION ALONG ℄ SURVEY -RPAY4-

SECTION @ END BENT AND BENTS ARE @ RIGHT ANGLES

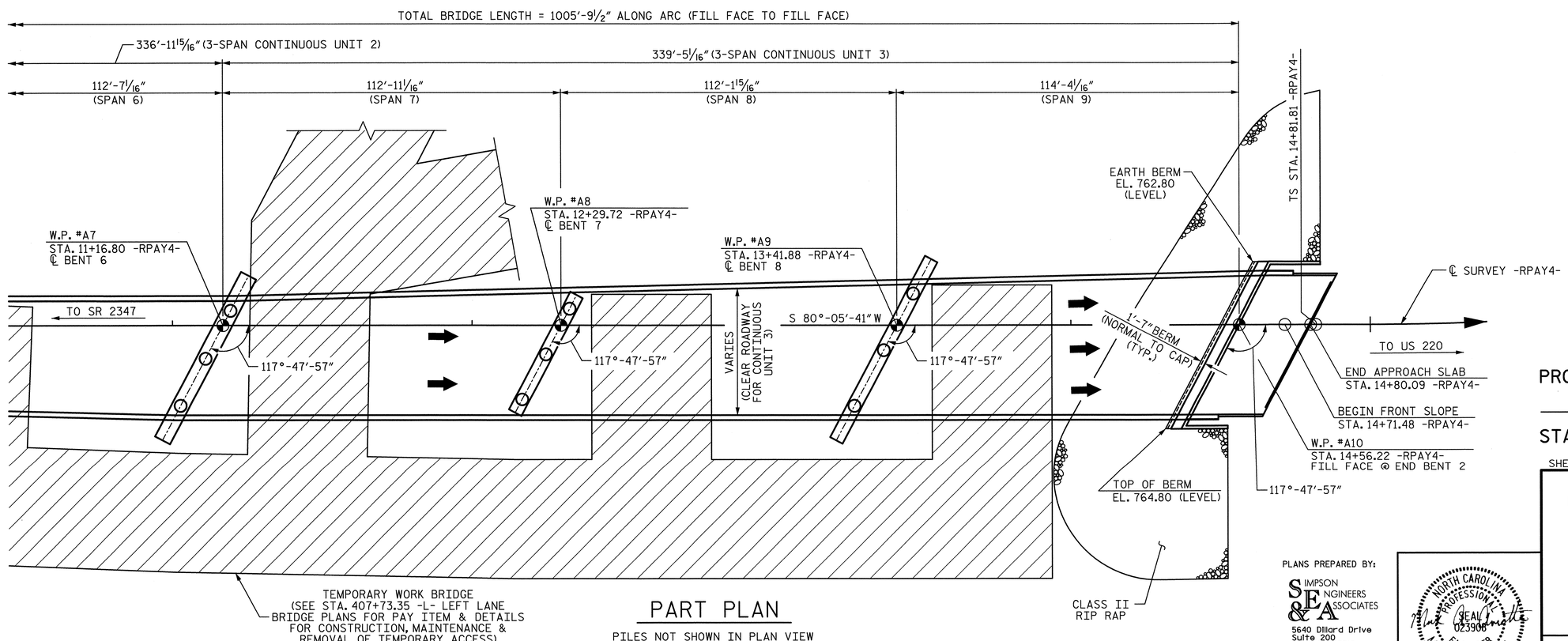

PART PLAN

PILES NOT SHOWN IN PLAN VIEW

END BENT AND ALL BENTS ARE PARALLEL

PROJECT NO. U-2524C

GUILFORD COUNTY

STATION: 9+53.33 -RPAY4-

SHEET 3 OF 8 BRIDGE NO. 1131

STATE OF NORTH CAROLINA
DEPARTMENT OF TRANSPORTATION
RALEIGH

GENERAL DRAWING
FOR BRIDGE ON RAMP A
OVER HORSEPEN CREEK
BETWEEN SR 2347
AND US 220
-RAMP A-

PLANS PREPARED BY:

SIMPSON ENGINEERS & ASSOCIATES
5640 Dillard Drive
Suite 200
Cary, NC 27518
(919) 852-0468
(919) 852-0598 (Fax)
www.simpsonengr.com
LICENSURE NO. C-2521

NORTH CAROLINA PROFESSIONAL SEAL 023906 ENGINEER MARK A. AVERETTE 6-5-2013

REVISIONS								SHEET NO.
NO.	BY:	DATE:	NO.	BY:	DATE:			S-676
1			3					TOTAL SHEETS
2			4					836

DRAWN BY: R. SEALEY DATE: 4-13
CHECKED BY: M. AVERETTE DATE: 4-13
DESIGN ENGINEER OF RECORD: M. AVERETTE DATE: 4-13

6/5/2013 3:42:59 PM G:\Projects\2011\U-2524 (Guilford Co)\Structures\Ramp A\Drawings\Final\U-2524_sd_rpa_gd.dgn

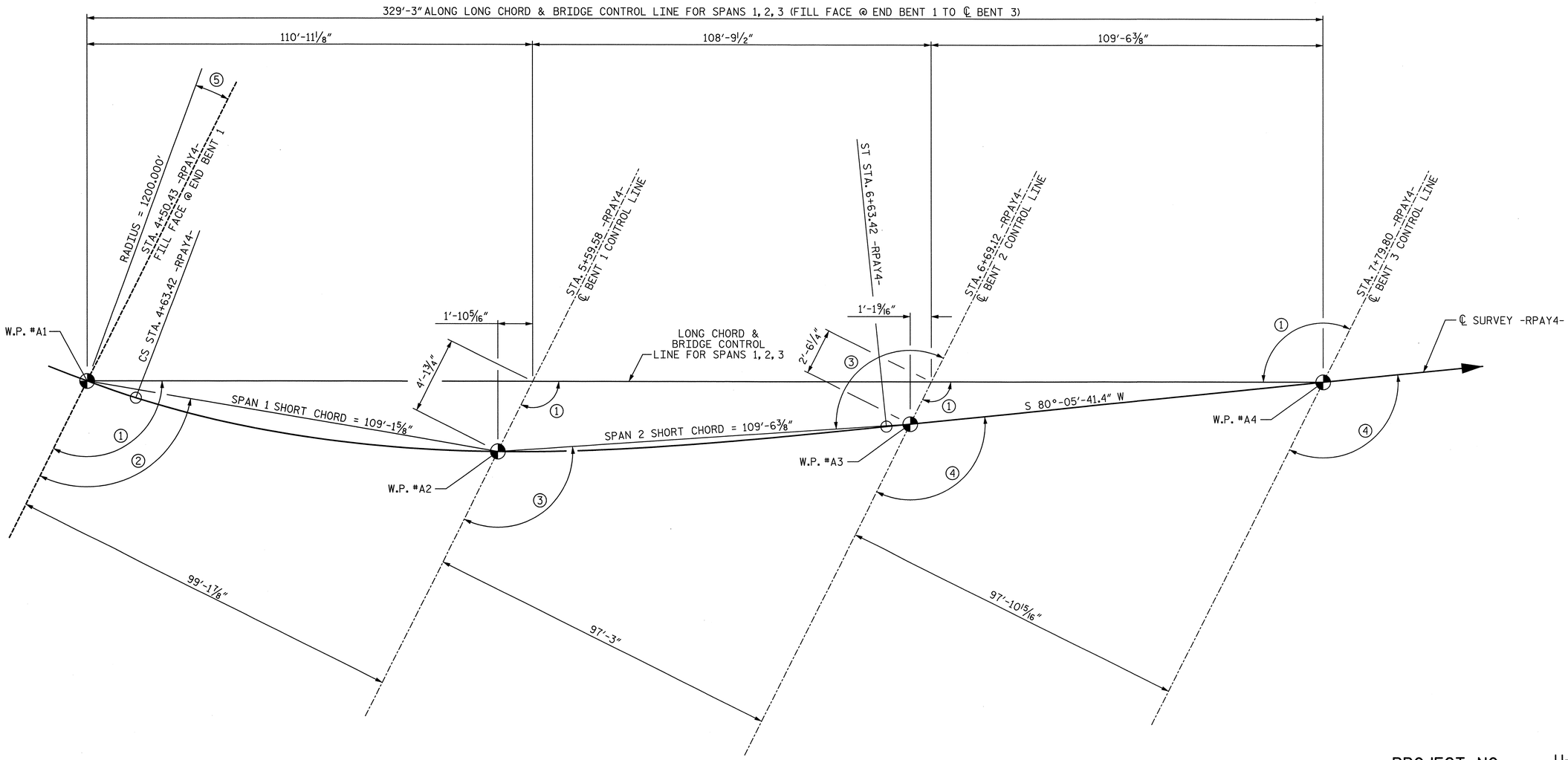

LONG CHORD LAYOUT

BENTS AND END BENT ARE PARALLEL

NOTE: THE CONTRACTOR'S ATTENTION IS CALLED TO THE FACT THAT CONTINUOUS UNIT 1 IS TO BE CONSTRUCTED TANGENT TO THE LONG CHORD.

ANGLES

1. 116°-37'-57" (TO LONG CHORD)
2. 114°-41'-10" (TO SHORT CHORD - SPAN 1)
3. 117°-23'-33" (TO SHORT CHORD - SPAN 2)
4. 117°-47'-57" (TO TANGENT BEARING)
5. 22°-24'-15"

PROJECT NO. U-2524C

GUILFORD COUNTY

STATION: 9+53.33 -RPAY4-

SHEET 4 OF 8

STATE OF NORTH CAROLINA
DEPARTMENT OF TRANSPORTATION
RALEIGH

GENERAL DRAWING
FOR BRIDGE ON RAMP A
OVER HORSEPEN CREEK
BETWEEN SR 2347
AND US 220
-RAMP A-

PLANS PREPARED BY:

SIMPSON ENGINEERS & ASSOCIATES
5640 Dillard Drive
Suite 200
Cary, NC 27518
(919) 852-0468
(919) 852-0598 (Fax)
www.simpsonengr.com
LICENSURE NO. C-2521

NORTH CAROLINA PROFESSIONAL SEAL 023908 ENGINEER MARK A. AVERETTE
6-5-2013

REVISIONS						SHEET NO.
NO.	BY:	DATE:	NO.	BY:	DATE:	S-677
1			3			TOTAL SHEETS
2			4			836

DRAWN BY: R. SEALEY DATE: 4-13
CHECKED BY: M. AVERETTE DATE: 4-13
DESIGN ENGINEER OF RECORD: M. AVERETTE DATE: 4-13

6/5/2013 3:43:04 PM G:\Projects\2011\U-2524 (Guilford Co)\Structures\Ramp A\Drawings\Final\U-2524_sd_rpa_gd.dgn

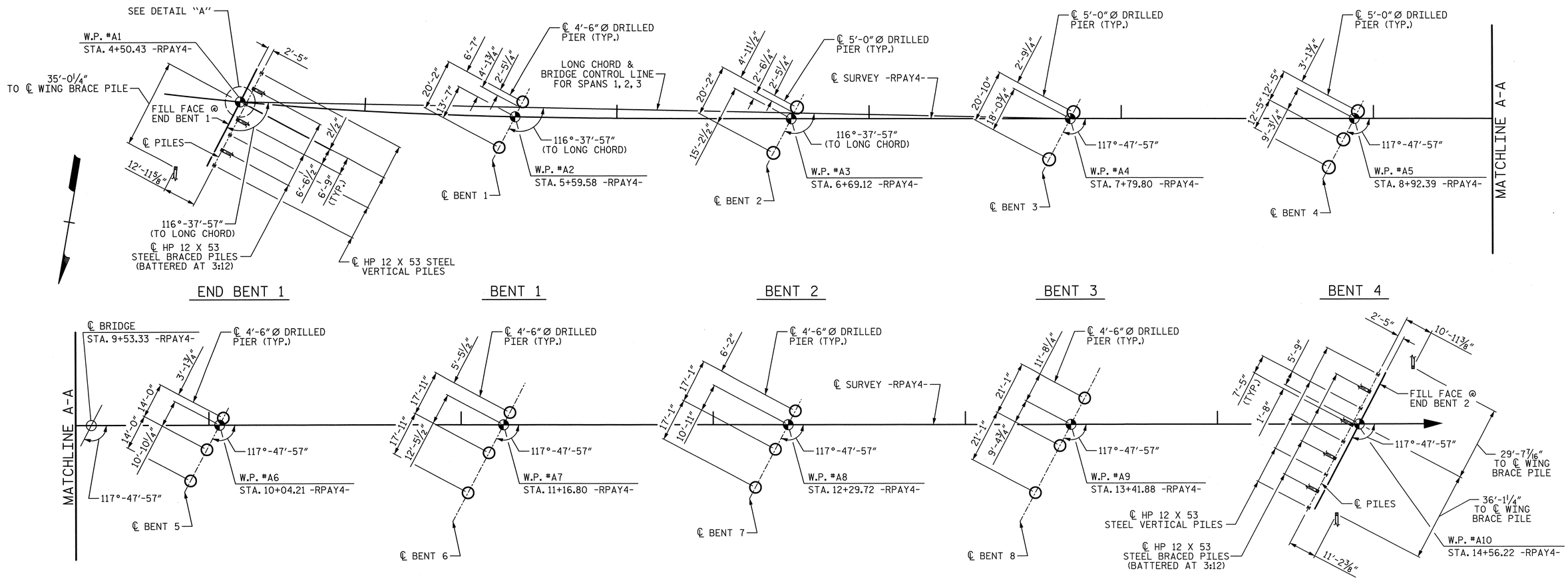

FOUNDATION LAYOUT

NOTE: THE CONTRACTOR'S ATTENTION IS CALLED TO THE FACT THAT CONTINUOUS UNIT 1 IS TO BE CONSTRUCTED TANGENT TO THE LONG CHORD.

FOUNDATION NOTES:

FOR PILES, SEE SECTION 450 OF THE STANDARD SPECIFICATIONS.

PILES AT END BENT 1 ARE DESIGNED FOR A FACTORED RESISTANCE OF 120 TONS PER PILE.

DRIVE PILES AT END BENT 1 TO A REQUIRED DRIVING RESISTANCE OF 200 TONS PER PILE.

PILES AT END BENT 2 ARE DESIGNED FOR A FACTORED RESISTANCE OF 115 TONS PER PILE.

DRIVE PILES AT END BENT 2 TO A REQUIRED DRIVING RESISTANCE OF 195 TONS PER PILE.

FOR DRILLED PIERS, SEE SECTION 411 OF THE STANDARD SPECIFICATIONS.

DRILLED PIERS AT BENT 1 AND BENT 2 ARE DESIGNED FOR A FACTORED RESISTANCE OF 560 TONS PER PIER. CHECK FIELD CONDITIONS FOR THE REQUIRED TIP RESISTANCE OF 40.0 TSF.

DRILLED PIERS AT BENT 3 ARE DESIGNED FOR A FACTORED RESISTANCE OF 625 TONS PER PIER. CHECK FIELD CONDITIONS FOR THE REQUIRED TIP RESISTANCE OF 40.0 TSF.

DRILLED PIERS AT BENT 4 AND BENT 5 ARE DESIGNED FOR A FACTORED RESISTANCE OF 490 TONS PER PIER. CHECK FIELD CONDITIONS FOR THE REQUIRED TIP RESISTANCE OF 40.0 TSF.

DRILLED PIERS AT BENT 6 ARE DESIGNED FOR A FACTORED RESISTANCE OF 510 TONS PER PIER. CHECK FIELD CONDITIONS FOR THE REQUIRED TIP RESISTANCE OF 40.0 TSF.

FOUNDATION NOTES (CONTINUED):

DRILLED PIERS AT BENT 7 ARE DESIGNED FOR A FACTORED RESISTANCE OF 535 TONS PER PIER. CHECK FIELD CONDITIONS FOR THE REQUIRED TIP RESISTANCE OF 40.0 TSF.

DRILLED PIERS AT BENT 8 ARE DESIGNED FOR A FACTORED RESISTANCE OF 570 TONS PER PIER. CHECK FIELD CONDITIONS FOR THE REQUIRED TIP RESISTANCE OF 40.0 TSF.

INSTALL DRILLED PIERS AT BENT 1 TO A TIP ELEVATION NO HIGHER THAN 713 FT (LEFT) AND 711 FT (RIGHT), RESPECTIVELY, AND WITH THE REQUIRED TIP RESISTANCE AND PENETRATION OF AT LEAST 9 FT INTO ROCK AS DEFINED BY ARTICAL 411-1 OF THE STANDARD SPECIFICATIONS.

INSTALL DRILLED PIERS AT BENT 2 TO A TIP ELEVATION NO HIGHER THAN 703 FT AND WITH THE REQUIRED TIP RESISTANCE AND PENETRATION OF AT LEAST 11 FT INTO ROCK AS DEFINED BY ARTICLE 411-1 OF THE STANDARD SPECIFICATIONS.

INSTALL DRILLED PIERS AT BENT 3 TO A TIP ELEVATION NO HIGHER THAN 705 FT AND WITH THE REQUIRED TIP RESISTANCE AND PENETRATION OF AT LEAST 11 FT INTO ROCK AS DEFINED BY ARTICLE 411-1 OF THE STANDARD SPECIFICATIONS.

INSTALL DRILLED PIERS AT BENT 4 TO A TIP ELEVATION NO HIGHER THAN 703 FT AND WITH THE REQUIRED TIP RESISTANCE AND PENETRATION OF AT LEAST 11 FT INTO ROCK AS DEFINED BY ARTICLE 411-1 OF THE STANDARD SPECIFICATIONS.

INSTALL DRILLED PIERS AT BENT 5 TO A TIP ELEVATION NO HIGHER THAN 720 FT AND WITH THE REQUIRED TIP RESISTANCE AND PENETRATION OF AT LEAST 10 FT INTO ROCK AS DEFINED BY ARTICLE 411-1 OF THE STANDARD SPECIFICATIONS.

FOUNDATION NOTES (CONTINUED):

INSTALL DRILLED PIERS AT BENT 6 TO A TIP ELEVATION NO HIGHER THAN 716 FT AND WITH THE REQUIRED TIP RESISTANCE AND PENETRATION OF AT LEAST 10 FT INTO ROCK AS DEFINED BY ARTICLE 411-1 OF THE STANDARD SPECIFICATIONS.

INSTALL DRILLED PIERS AT BENT 7 TO A TIP ELEVATION NO HIGHER THAN 720 FT AND WITH THE REQUIRED TIP RESISTANCE AND PENETRATION OF AT LEAST 10 FT INTO ROCK AS DEFINED BY ARTICLE 411-1 OF THE STANDARD SPECIFICATIONS.

INSTALL DRILLED PIERS AT BENT 8 TO A TIP ELEVATION NO HIGHER THAN 714 FT (LEFT), 717 FT (CENTER), AND 720 FT (RIGHT) AND WITH THE REQUIRED TIP RESISTANCE AND PENETRATION OF AT LEAST 10 FT INTO ROCK AS DEFINED BY ARTICLE 411-1 OF THE STANDARD SPECIFICATIONS.

THE SCOUR CRITICAL ELEVATION FOR BENTS 2 THROUGH 8 ARE ELEVATIONS 724.0 FT, 723.0 FT, 725.0 FT, 737.0 FT, 738.0 FT, 738.0 FT, AND 738.0 FT, RESPECTIVELY. SCOUR CRITICAL ELEVATIONS ARE USED TO MONITOR POSSIBLE SCOUR PROBLEMS DURING THE LIFE OF THE STRUCTURE.

SID INSPECTIONS MAY BE REQUIRED FOR DRILLED PIERS. THE ENGINEER WILL DETERMINE THE NEED FOR SID INSPECTIONS. FOR SID INSPECTIONS, SEE SECTION 411 OF THE STANDARD SPECIFICATIONS.

CSL TUBES ARE REQUIRED AND CSL TESTING MAY BE REQUIRED FOR DRILLED PIERS. THE ENGINEER WILL DETERMINE THE NEED FOR CSL TESTING. FOR CSL TESTING, SEE SECTION 411 OF THE STANDARD SPECIFICATIONS.

OBSERVE A 4 MONTH WAITING PERIOD AFTER CONSTRUCTING THE EMBANKMENT TO WITHIN 2 FT OF FINISHED GRADE BEFORE BEGINNING END BENT CONSTRUCTION AT END BENT 2.

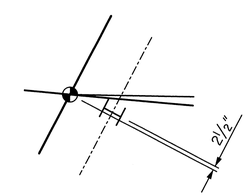

DETAIL "A"

PROJECT NO. U-2524C

GUILFORD COUNTY

STATION: 9+53.33 -RPAY4-

SHEET 5 OF 8

STATE OF NORTH CAROLINA
DEPARTMENT OF TRANSPORTATION
RALEIGH

GENERAL DRAWING
FOR BRIDGE ON RAMP A OVER HORSEPEN CREEK BETWEEN SR 2347 AND US 220
-RAMP A-

REVISIONS						SHEET NO.
NO.	BY:	DATE:	NO.	BY:	DATE:	S-678
1			3			TOTAL SHEETS
2			4			836

PLANS PREPARED BY:
SIMPSON ENGINEERS & ASSOCIATES
5640 Dillard Drive
Suite 200
Cary, NC 27518
(919) 852-0468
(919) 852-0598 (Fax)
www.simpsonengr.com
LICENSURE NO. C-2521

NORTH CAROLINA PROFESSIONAL SEAL 023908 ENGINEER MARK A. AVERETTE
6-5-2013

DRAWN BY:	R. SEALEY	DATE:	4-13
CHECKED BY:	M. AVERETTE	DATE:	4-13
DESIGN ENGINEER OF RECORD:	M. AVERETTE	DATE:	4-13

6/5/2013 3:43:08 PM G:\Projects\2011\U-2524 (Guilford Co)\Structures\Ramp A\Drawings\Final\U-2524_sd_rpa_gd.dgn

BM #12 LARGE NAIL SET IN 12" GUM, STA. 5+35.54 -RPAY4- 35.81' RT, EL. 748.99'

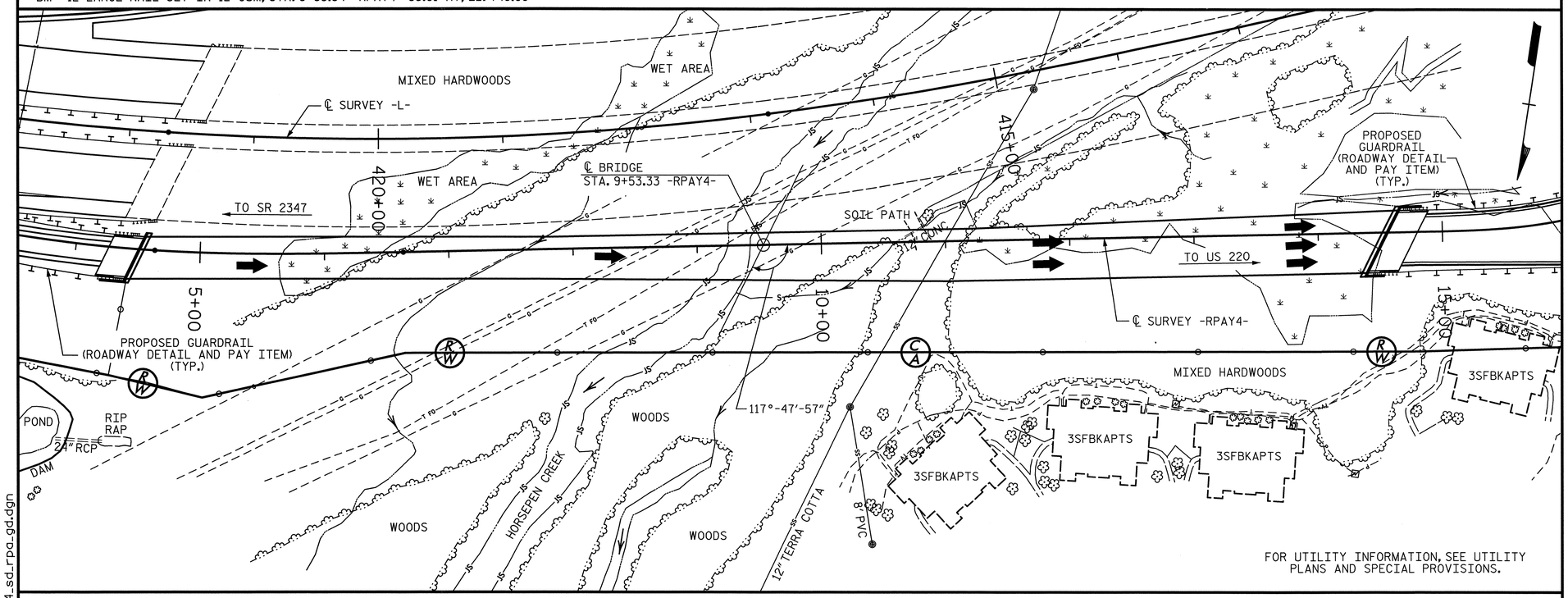

LOCATION SKETCH

NOTES:

ASSUMED LIVE LOAD = HL-93 OR ALTERNATE LOADING.

FOR OTHER DESIGN DATA AND GENERAL NOTES, SEE "STANDARD NOTES" SHEET.

THIS BRIDGE HAS BEEN DESIGNED IN ACCORDANCE WITH THE AASHTO LRFD BRIDGE DESIGN SPECIFICATIONS.

THIS BRIDGE HAS BEEN DESIGNED IN ACCORDANCE WITH "HEC 18-EVALUATING SCOUR AT BRIDGES".

THIS BRIDGE IS LOCATED IN SEISMIC ZONE 1.

PRESTRESSED CONCRETE DECK PANELS MAY BE USED IN LIEU OF METAL STAY-IN-PLACE FORMS IN ACCORDANCE WITH ARTICLE 420-3 OF THE STANDARD SPECIFICATIONS.

REMOVABLE FORMS MAY BE USED IN LIEU OF METAL STAY-IN-PLACE FORMS IN ACCORDANCE WITH ARTICLE 420-3 OF THE STANDARD SPECIFICATIONS.

THE CONTRACTOR SHALL PROVIDE INDEPENDENT ASSURANCE SAMPLES OF REINFORCING STEEL AS FOLLOWS: FOR PROJECTS REQUIRING UP TO 400 TONS OF REINFORCING STEEL, ONE 30 INCH SAMPLE OF EACH SIZE BAR USED, AND FOR PROJECTS REQUIRING OVER 400 TONS OF REINFORCING STEEL, TWO 30 INCH SAMPLES OF EACH SIZE BAR USED. THE BARS FROM WHICH THE SAMPLES ARE TAKEN MUST THEN BE SPLICED WITH REPLACEMENT BARS OF THE SIZE AND LENGTH OF THE SAMPLE, PLUS A MINIMUM LAP SPLICE OF THIRTY BAR DIAMETERS. PAYMENT FOR THE SAMPLES OF REINFORCING STEEL SHALL BE CONSIDERED INCIDENTAL TO VARIOUS PAY ITEMS.

NEEDLE BEAMS WILL NOT BE ALLOWED UNLESS OTHERWISE CALLED FOR ON THE PLANS OR APPROVED BY THE ENGINEER.

FOR SUBMITTAL OF WORKING DRAWINGS, SEE SPECIAL PROVISIONS.

FOR FALSEWORK AND FORMWORK, SEE SPECIAL PROVISIONS.

FOR CRANE SAFETY, SEE SPECIAL PROVISIONS.

FOR GROUT FOR STRUCTURES, SEE SPECIAL PROVISIONS.

FOR EROSION CONTROL MEASURES, SEE EROSION CONTROL PLANS.

FOR PLACING LOAD ON STRUCTURE MEMBERS, SEE SPECIAL PROVISIONS.

THE LOCATION OF THE CONSTRUCTION JOINT IN THE DRILLED PIERS IS BASED ON AN APPROXIMATE GROUND LINE ELEVATION. IF THE CONSTRUCTION JOINT IS ABOVE THE ACTUAL GROUND ELEVATION, THE CONTRACTOR SHALL PLACE THE CONSTRUCTION JOINT 1 FT. BELOW THE GROUND LINE.

BENTS 2 AND 3 HAVE BEEN DESIGNED IN SUCH A MANNER THAT WILL ALLOW THE IN-SITU SOILS TO BE EXCAVATED TO A DEPTH OF 20 FEET BELOW THE EXISTING GROUND SURFACE ACROSS THE ENTIRE WIDTH AND ALONG THE ENTIRE LENGTH OF COLONIAL PIPELINE COMNPANY'S EASEMENT WITHOUT CAUSING ANY NEGATIVE IMPACTS TO THE STRENGTH, STABILITY OR SERVICEABILITY OF THE BRIDGE OR ITS FOUNDATIONS.

THE CLASS AA CONCRETE IN THE BRIDGE DECK SHALL CONTAIN FLY ASH OR GROUND GRANULATED BLAST FURNACE SLAG AT THE SUBSTITUTION RATE SPECIFIED IN ARTICLE 1024-1 AND IN ACCORDANCE WITH ARTICLES 1024-5 AND 1024-6 OF THE STANDARD SPECIFICATIONS. NO PAYMENT WILL BE MADE FOR THIS SUBSTITUTION AS IT IS CONSIDERED INCIDENTAL TO THE COST OF THE REINFORCED CONCRETE DECK SLAB.

PROJECT NO. U-2524C

GUILFORD COUNTY

STATION: 9+53.33 -RPAY4-

SHEET 6 OF 8

STATE OF NORTH CAROLINA
DEPARTMENT OF TRANSPORTATION
RALEIGH

GENERAL DRAWING
FOR BRIDGE ON RAMP A
OVER HORSEPEN CREEK
BETWEEN SR 2347
AND US 220
-RAMP A-

REVISIONS						SHEET NO.
NO.	BY:	DATE:	NO.	BY:	DATE:	679
1			3			TOTAL SHEETS
2			4			836

PLANS PREPARED BY:

SIMPSON ENGINEERS & ASSOCIATES
5640 Dillard Drive
Suite 200
Cary, NC 27518
(919) 852-0468
(919) 852-0598 (Fax)
www.simpsonengr.com
LICENSURE NO. C-2521

NORTH CAROLINA PROFESSIONAL SEAL 023906 ENGINEER MARK A. AVERETTE
6-5-2013

DRAWN BY: R. SEALEY DATE: 4-13
CHECKED BY: M. AVERETTE DATE: 4-13
DESIGN ENGINEER OF RECORD: M. AVERETTE DATE: 4-13

6/6/2013 11:26:35 AM G:\Projects\2011\U-2524 (Guilford Co)\Structures\Ramp A\Drawings\Final\U-2524_sd_rpa_gd.dgn

TOTAL BILL OF MATERIAL

	4'-6" DIA. DRILLED PIERS IN SOIL	5'-0" DIA. DRILLED PIERS IN SOIL	4'-6" DIA. DRILLED PIERS NOT IN SOIL	5'-0" DIA. DRILLED PIERS NOT IN SOIL	SID INSPECTIONS	CSL TESTING	REINFORCED CONCRETE DECK SLAB	GROOVING BRIDGE FLOORS	CLASS A CONCRETE (BRIDGE)	BRIDGE APPROACH SLABS	REINFORCING STEEL (BRIDGE)	SPIRAL COLUMN REINFORCING STEEL	MODIFIED 72" PRESTRESSED CONC GIRDERS		HP 12x53 STEEL PILES		CONCRETE BARRIER RAIL
	LF	LF	LF	LF	EA	EA	SF	SF	CY	LS	LB	LB	NO.	LF	NO.	LF	LF
SUPERSTRUCTURE							38,725	34,052					39	4,299.95			2,048.1
END BENT 1									53.0		6,229				8	260	
BENT 1	39.5		27.0			1			53.3		15,245	3,731					
BENT 2		55.0		29.0		1			62.9		23,231	4,882					
BENT 3		55.5		25.0		1			67.6		23,602	4,720					
BENT 4		83.5		44.0		1			84.5		33,076	7,363					
BENT 5	32.0		37.0			1			75.2		18,831	4,959					
BENT 6	45.8		39.0			1			99.6		23,434	5,170					
BENT 7	31.0		44.0			1			71.2		18,453	4,589					
BENT 8	48.8		36.0			1			85.2		23,234	4,565					
END BENT 2									71.9		9,571				11	330	
TOTAL	197.1	194.0	183.0	98.0	4	8	38,725	34,052	724.4	LS	194,906	39,979	39	4,299.95	19	590	2,048.1

TOTAL BILL OF MATERIAL (CONT'D.)

	RIP RAP CLASS II (2'-0" THICK)	GEOTEXTILE FOR DRAINAGE	ELASTOMERIC BEARINGS	EXPANSION JOINT SEALS	STRUCTURE DRAINAGE SYSTEM AT STA. 9+53.33 -RPAY4-
	TON	SY	LS	LS	LS
SUPERSTRUCTURE					
END BENT 1	525	585			
BENT 1					
BENT 2					
BENT 3					
BENT 4					
BENT 5					
BENT 6					
BENT 7					
BENT 8					
END BENT 2	720	800			
TOTAL	1,245	1,385	LS	LS	LS

PROJECT NO. U-2524C

GUILFORD COUNTY

STATION: 9+53.33 -RPAY4-

SHEET 7 OF 8

STATE OF NORTH CAROLINA
DEPARTMENT OF TRANSPORTATION
RALEIGH

GENERAL DRAWING
FOR BRIDGE ON RAMP A
OVER HORSEPEN CREEK
BETWEEN SR 2347
AND US 220
-RAMP A-

PLANS PREPARED BY:

SIMPSON ENGINEERS & ASSOCIATES
5640 Dillard Drive
Suite 200
Cary, NC 27518
(919) 852-0468
(919) 852-0598 (Fax)
www.simpsonengr.com
LICENSURE NO. C-2521

NORTH CAROLINA PROFESSIONAL SEAL 023908 ENGINEER MARK A. AVERETTE
6-5-2013

REVISIONS						SHEET NO.
NO.	BY:	DATE:	NO.	BY:	DATE:	S-680
1			3			TOTAL SHEETS
2			4			836

DRAWN BY: R. SEALEY DATE: 4-13
CHECKED BY: M. AVERETTE DATE: 4-13
DESIGN ENGINEER OF RECORD: M. AVERETTE DATE: 4-13

6/21/2013 9:18:04 AM G:\Projects\2011\U-2524 (Guilford Co)\Structures\Ramp A\Drawings\Final\U-2524_sd_rpa_gd.dgn

LOAD AND RESISTANCE FACTOR RATING (LRFR) SUMMARY FOR PRESTRESSED CONCRETE GIRDERS

LEVEL		VEHICLE	WEIGHT (W) (TONS)	CONTROLLING LOAD RATING (#)	MINIMUM RATING FACTORS (RF)	TONS = W x RF	STRENGTH I LIMIT STATE											SERVICE III LIMIT STATE						COMMENT NUMBER
								MOMENT					SHEAR						MOMENT					
							LIVE-LOAD FACTORS (γ_{LL})	DISTRIBUTION FACTORS (DF)	RATING FACTOR	SPAN	GIRDER LOCATION	DISTANCE FROM LEFT END OF SPAN (ft)	DISTRIBUTION FACTORS (DF)	RATING FACTOR	SPAN	GIRDER LOCATION	DISTANCE FROM LEFT END OF SPAN (ft)	LIVE-LOAD FACTORS (γ_{LL})	DISTRIBUTION FACTORS (DF)	RATING FACTOR	SPAN	GIRDER LOCATION	DISTANCE FROM LEFT END OF SPAN (ft)	
DESIGN LOAD RATING		HL-93 (INVENTORY)	N/A	1	1.11	- -	1.75	0.916	1.30	1-3	4	54.425	1.045	1.11	9	1	101.925	0.80	0.916	1.15	1-3	4	54.425	
		HL-93 (OPERATING)	N/A		1.47	- -	1.35	0.916	1.69	1-3	4	54.425	1.045	1.47	9	1	101.925	N/A	- -	- -	- -	- -	- -	
		HS-20 (INVENTORY)	36.000	2	1.56	56.2	1.75	0.916	1.84	1-3	4	54.425	1.045	1.56	9	1	101.925	0.80	0.916	1.62	1-3	4	54.425	
		HS-20 (OPERATING)	36.000		2.06	74.2	1.35	0.916	2.39	1-3	4	54.425	1.045	2.06	9	1	101.925	N/A	- -	- -	- -	- -	- -	
LEGAL LOAD RATING	SINGLE VEHICLE (SV)	SH	12.500		4.21	52.6	1.40	0.916	5.98	1-3	4	54.425	1.045	5.56	9	1	101.925	0.80	0.916	4.21	1-3	4	54.425	
		S3C	21.500		2.46	52.9	1.40	0.916	3.49	1-3	4	54.425	1.045	3.20	9	1	101.925	0.80	0.916	2.46	1-3	4	54.425	
		S3A	22.750		2.33	53.0	1.40	0.916	3.31	1-3	4	54.425	1.045	3.02	9	1	101.925	0.80	0.916	2.33	1-3	4	54.425	
		S4A	26.750		2.04	54.6	1.40	0.916	2.89	1-3	4	54.425	1.045	2.61	9	1	101.925	0.80	0.916	2.04	1-3	4	54.425	
		S5A	30.500		1.80	54.9	1.40	0.916	2.55	1-3	4	54.425	1.045	2.35	9	1	101.925	0.80	0.916	1.80	1-3	4	54.425	
		S6A	34.500		1.62	55.9	1.40	0.916	2.30	1-3	4	54.425	1.045	2.09	9	1	101.925	0.80	0.916	1.62	1-3	4	54.425	
		S7B	38.500		1.47	56.6	1.40	0.916	2.09	1-3	4	54.425	1.045	1.92	9	1	101.925	0.80	0.916	1.47	1-3	4	54.425	
		S7A	40.000	3	1.44	57.6	1.40	0.916	2.05	1-3	4	54.425	1.045	1.92	9	1	101.925	0.80	0.916	1.44	1-3	4	54.425	
	TRUCK TRACTOR SEMI-TRAILER (TTST)	T4A	28.250		1.99	56.2	1.40	0.916	2.83	1-3	4	54.425	1.045	2.51	9	1	101.925	0.80	0.916	1.99	1-3	4	54.425	
		T5B	32.000		1.75	56.0	1.40	0.916	2.49	1-3	4	54.425	1.045	2.32	9	1	101.925	0.80	0.916	1.75	1-3	4	54.425	
		T6A	36.000		1.60	57.6	1.40	0.916	2.27	1-3	4	54.425	1.045	2.10	9	1	101.925	0.80	0.916	1.60	1-3	4	54.425	
		T7A	40.000		1.47	58.8	1.40	0.916	2.09	1-3	4	54.425	1.045	1.92	9	1	101.925	0.80	0.916	1.47	1-3	4	54.425	
		T7B	40.000		1.55	62.0	1.40	0.916	2.19	1-3	4	54.425	1.045	1.83	9	1	101.925	0.80	0.916	1.55	1-3	4	54.425	

LOAD FACTORS:

DESIGN LOAD RATING FACTORS	LIMIT STATE	γ_{DC}	γ_{DW}
	STRENGTH I	1.25	1.50
	SERVICE III	1.00	1.00

NOTES:

MINIMUM RATING FACTORS ARE BASED ON THE STRENGTH I AND SERVICE III LIMIT STATES.

ALLOWABLE STRESSES FOR SERVICE III LIMIT STATE ARE AS REQUIRED FOR DESIGN.

(#) CONTROLLING LOAD RATING

(1) DESIGN LOAD RATING (HL-93)

(2) DESIGN LOAD RATING (HS-20)

(3) LEGAL LOAD RATING **

** SEE CHART FOR VEHICLE TYPE

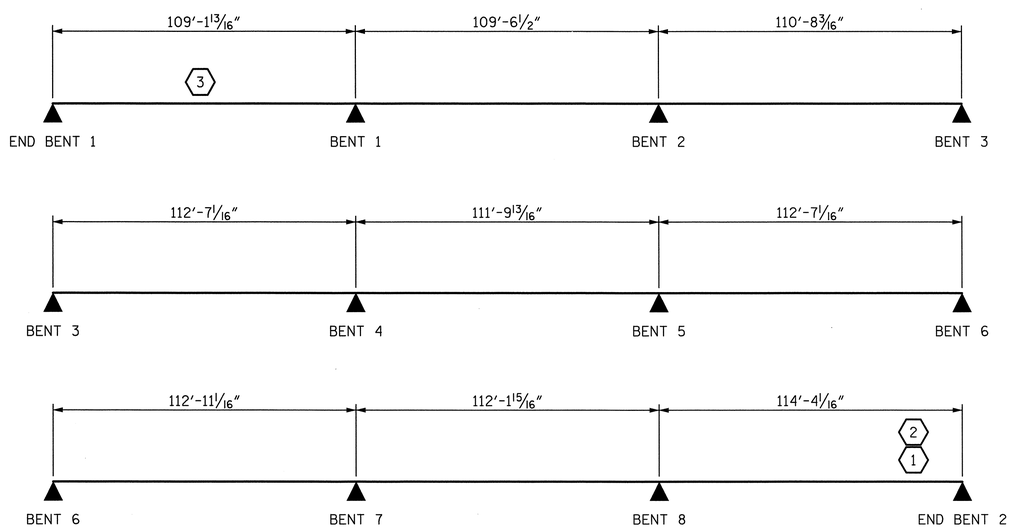

LRFR SUMMARY

PROJECT NO. U-2524C

GUILFORD COUNTY

STATION: 9+53.33 -RPAY4-

SHEET 8 OF 8

STATE OF NORTH CAROLINA
DEPARTMENT OF TRANSPORTATION
RALEIGH

GENERAL DRAWING
FOR BRIDGE ON RAMP A
OVER HORSEPEN CREEK
BETWEEN SR 2347
AND US 220
-RAMP A-

PLANS PREPARED BY:
SIMPSON ENGINEERS & ASSOCIATES
5640 Dillard Drive
Suite 200
Cary, NC 27518
(919) 852-0468
(919) 852-0598 (Fax)
www.simpsonengr.com
LICENSURE NO. C-2521

NORTH CAROLINA PROFESSIONAL SEAL 023906 ENGINEER MARK A. AVERETTE
6-5-2013

REVISIONS						SHEET NO.
NO.	BY:	DATE:	NO.	BY:	DATE:	S-681
1			3			TOTAL SHEETS
2			4			836

DRAWN BY: R. SEALEY DATE: 4-13
CHECKED BY: M. AVERETTE DATE: 4-13
DESIGN ENGINEER OF RECORD: M. AVERETTE DATE: 4-13

6/5/2013 3:43:23 PM G:\Projects\2011\U-2524 (Guilford Co)\Structures\Ramp A\Drawings\Final\U-2524_sd_rpa_lrfr.dgn

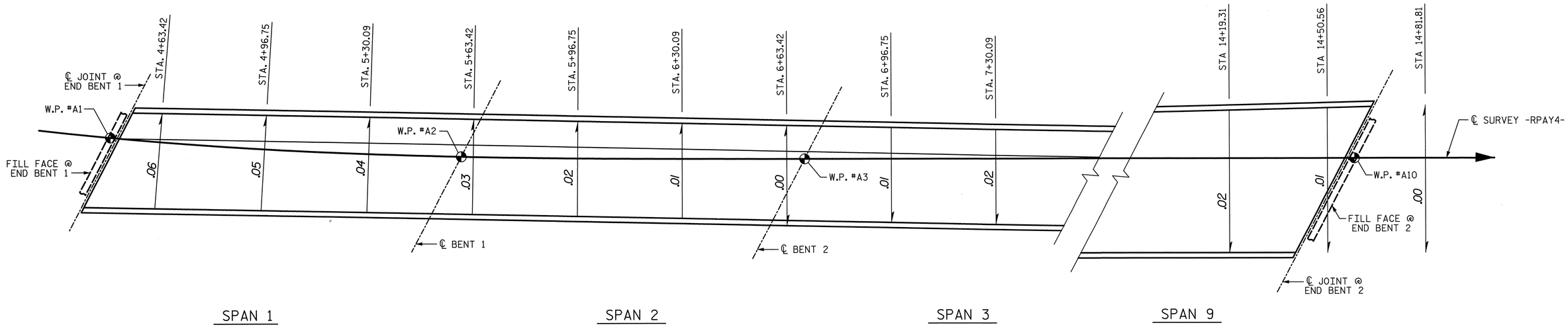

LAYOUT FOR SUPERELEVATION

MAXIMUM SUPERELEVATION IS .06 @ STA. 4+63.42, SPAN 1

SUPERELEVATION IS .02 FROM STA. 7+30.08 IN SPAN 3 TO STA. 14+19.31 IN SPAN 9

PROJECT NO. U-2524C

GUILFORD COUNTY

STATION: 9+53.33 -RPAY4-

STATE OF NORTH CAROLINA
DEPARTMENT OF TRANSPORTATION
RALEIGH
SUPERSTRUCTURE

LAYOUT FOR SUPERELEVATION

-RAMP A-

PLANS PREPARED BY:

SIMPSON ENGINEERS & ASSOCIATES
5640 Dillard Drive
Suite 200
Cary, NC 27518
(919) 852-0468
(919) 852-0598 (Fax)
www.simpsonengr.com
LICENSURE NO. C-2521

NORTH CAROLINA PROFESSIONAL SEAL 023908 ENGINEER MARK A. AVERETTE
6-5-2013

REVISIONS						SHEET NO.
NO.	BY:	DATE:	NO.	BY:	DATE:	S-682
1			3			TOTAL SHEETS
2			4			836

DRAWN BY: R. SEALEY DATE: 4-13
CHECKED BY: M. AVERETTE DATE: 4-13
DESIGN ENGINEER OF RECORD: M. AVERETTE DATE: 4-13

6/5/2013 3:43:29 PM G:\Projects\2011\U-2524 (Guilford Co)\Structures\Ramp A\Drawings\Final\U-2524_sd_rpa_se.dgn

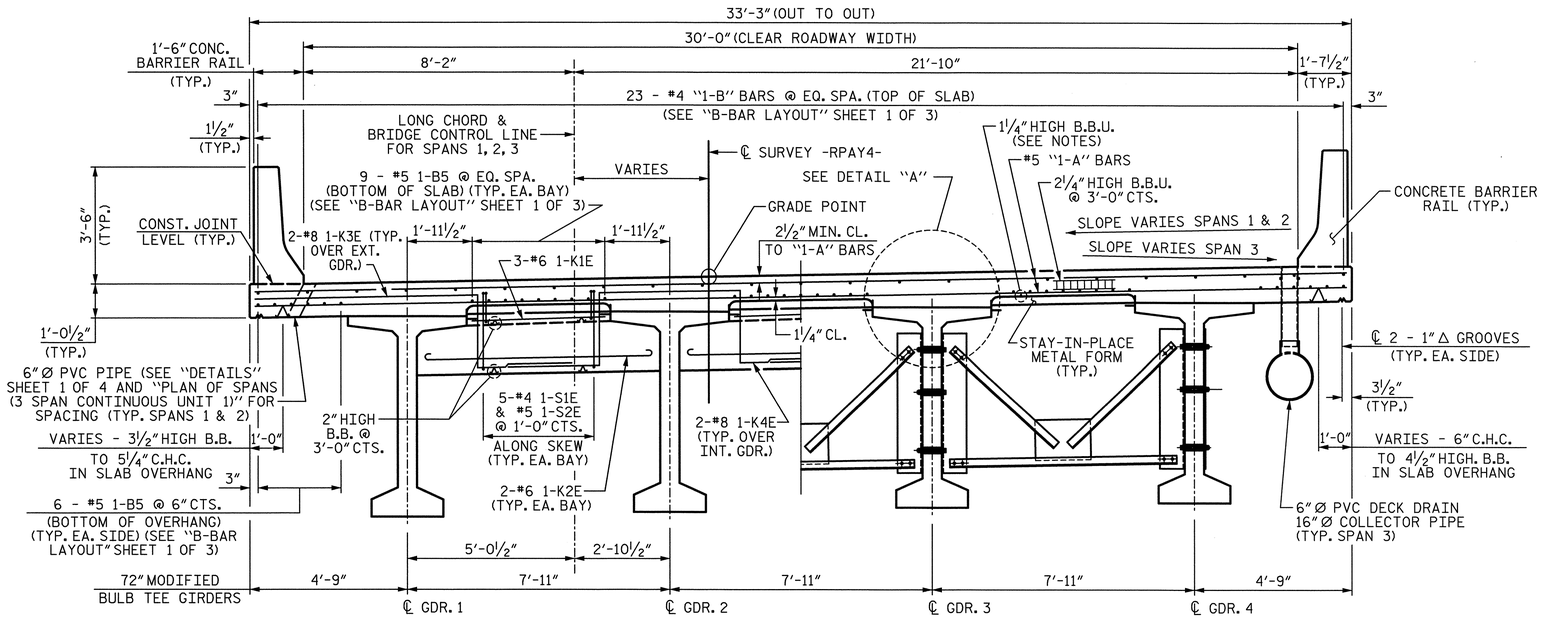

EXPANSION DIAPHRAGMS

(END BENT 1 & BENT 3)

INTERMEDIATE DIAPHRAGMS

TYPICAL SECTION - 3 SPAN CONTINUOUS UNIT 1

DIAPHRAGM REINFORCING TYPICAL EACH BAY

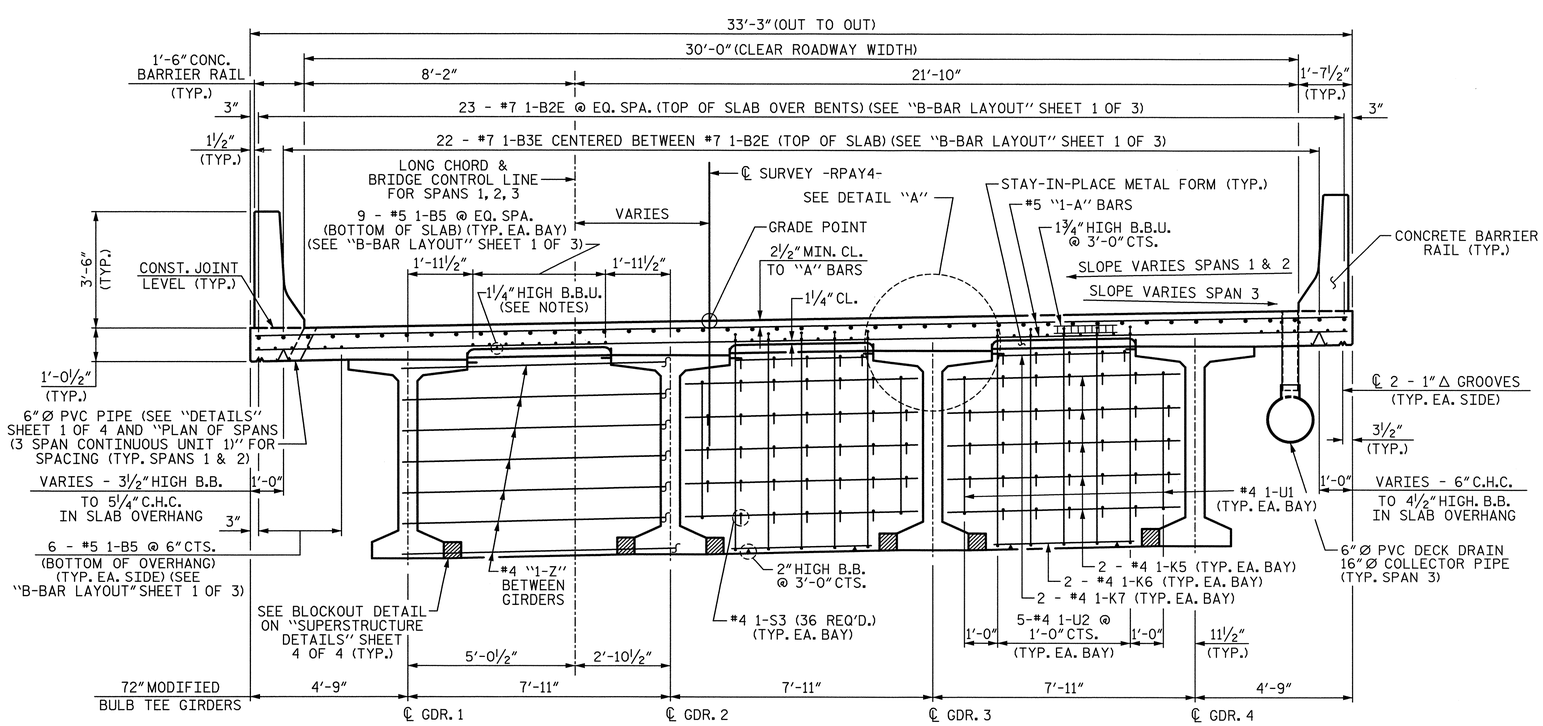

CONTINUOUS BENT DIAPHRAGMS

BENT 1 & BENT 2

TYPICAL SECTION - 3 SPAN CONTINUOUS UNIT 1

DIAPHRAGM REINFORCING TYPICAL EACH BAY

NOTES:

THE CONTRACTOR'S ATTENTION IS CALLED TO THE FACT THAT CONTINUOUS UNIT 1 IS TO BE CONSTRUCTED TANGENT TO THE LONG CHORD.

PROVIDE 1¼" HIGH BEAM BOLSTERS UPPER AT 4'-0" CTS. ATOP THE METAL STAY-IN-PLACE FORMS TO SUPPORT THE BOTTOM MAT OF "A" BARS. WHEN USING REMOVABLE FORMS, PROVIDE CONTINUOUS HIGH CHAIRS FOR METAL DECK (C.H.C.M.) @ 4'-0" CTS. WITH A HEIGHT TO SUPPORT THE BOTTOM MAT OF "A" BARS A CLEAR DISTANCE OF 2½" ABOVE THE TOP OF THE REMOVABLE FORM.

LONGITUDINAL STEEL MAY BE SHIFTED SLIGHTLY, AS NECESSARY, TO AVOID INTERFERENCE WITH STIRRUPS IN PRESTRESSED CONCRETE GIRDERS.

BARRIER RAIL IN A CONTINUOUS UNIT SHALL NOT BE CAST UNTIL ALL SLAB CONCRETE IN THAT UNIT HAS BEEN CAST AND HAS REACHED A MINIMUM COMPRESSIVE STRENGTH OF 3,000 PSI.

PREVIOUSLY CAST CONCRETE IN A CONTINUOUS UNIT SHALL HAVE ATTAINED A MINIMUM COMPRESSIVE STRENGTH OF 3,000 PSI BEFORE ADDITIONAL CONCRETE IS CAST IN THE UNIT.

SEE "LAYOUT FOR SUPERELEVATION" FOR SUPERELEVATION TRANSITIONS.

SEE "DETAILS" SHEET 1 OF 4, "PLAN OF SPANS" FOR CONTINUOUS UNIT 1, AND "CLOSED DRAINAGE SYSTEM DETAILS" SHEETS FOR DRAINAGE DETAILS AND LOCATIONS.

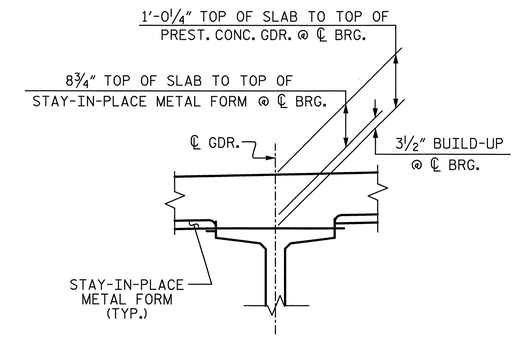

DETAIL "A"

PROJECT NO. U-2524C

GUILFORD COUNTY

STATION: 9+53.33 -RPAY4-

SHEET 1 OF 3

STATE OF NORTH CAROLINA
DEPARTMENT OF TRANSPORTATION
RALEIGH

SUPERSTRUCTURE

TYPICAL SECTION
(3 SPAN CONTINUOUS UNIT 1)
(SPANS 1, 2, & 3)

-RAMP A-

PLANS PREPARED BY:
SIMPSON ENGINEERS & ASSOCIATES
5640 Dillard Drive
Suite 200
Cary, NC 27518
(919) 852-0468
(919) 852-0598 (Fax)
www.sfmpsonengr.com
LICENSURE NO. C-2521

NORTH CAROLINA PROFESSIONAL SEAL 023906 ENGINEER MARK A. AVERETTE
6-5-2013

REVISIONS								SHEET NO.
NO.	BY:	DATE:	NO.	BY:	DATE:			S-683
1			3					TOTAL SHEETS
2			4					836

DRAWN BY:	R. SEALEY	DATE:	4-13
CHECKED BY:	M. AVERETTE	DATE:	4-13
DESIGN ENGINEER OF RECORD:	M. AVERETTE	DATE:	4-13

TYPICAL SECTION - 3 SPAN CONTINUOUS UNIT 1

DIAPHRAGM REINFORCING TYPICAL EACH BAY

6/5/2013 3:43:48 PM G:\Projects\2011\U-2524 (Guilford Co)\Structures\Ramp A\Drawings\Final\U-2524_sd_rpa_ts.dgn

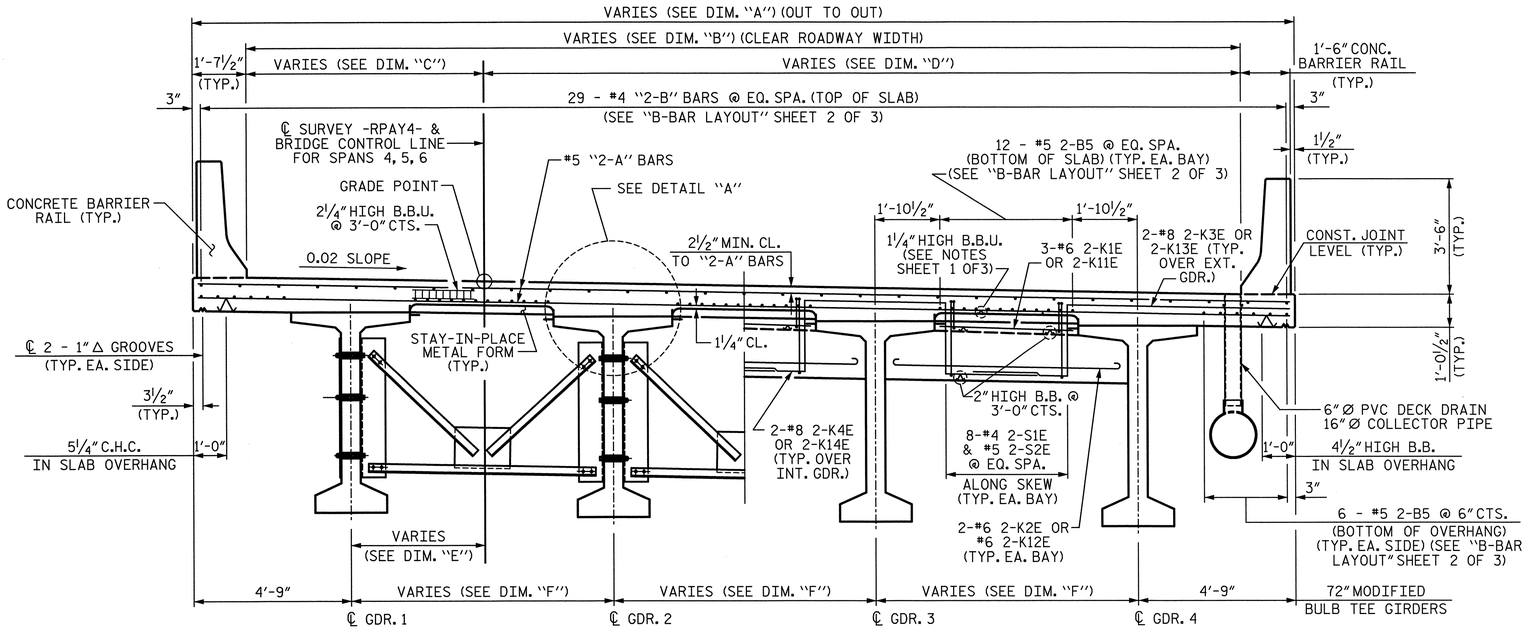

INTERMEDIATE DIAPHRAGMS

EXPANSION DIAPHRAGMS

BENT 3 & BENT 6

TYPICAL SECTION - 3 SPAN CONTINUOUS UNIT 2

DIAPHRAGM REINFORCING TYPICAL EACH BAY

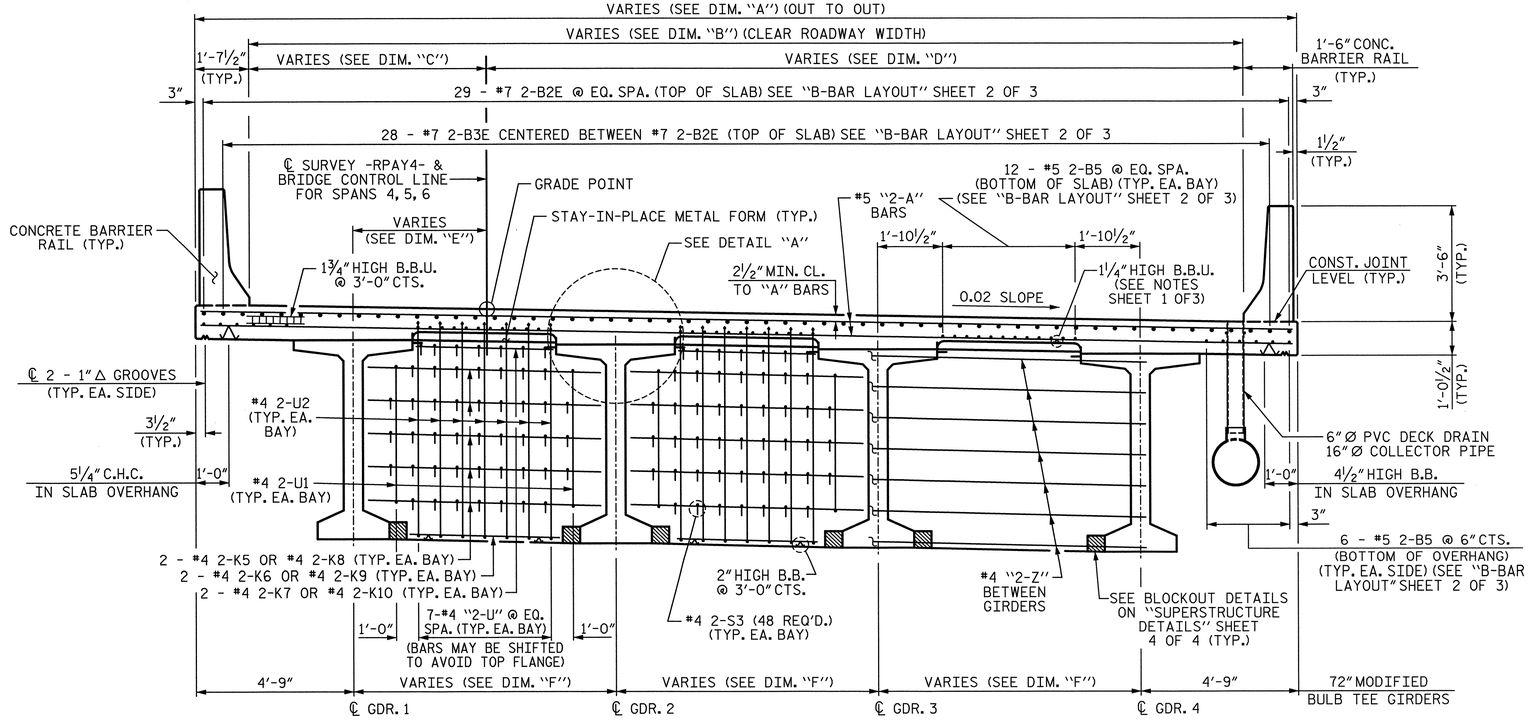

CONTINUOUS BENT DIAPHRAGMS

BENT 4 & BENT 5

TYPICAL SECTION - 3 SPAN CONTINUOUS UNIT 2

DIAPHRAGM REINFORCING TYPICAL EACH BAY

CONTINUOUS UNIT 2

LOCATION	DIM. "A"	DIM. "B"	DIM. "C"	DIM. "D"	DIM. "E"	DIM. "F"
W.P. #A4 (SPAN 4 SIDE)	32'-11¾"	29'-8¾"	8'-1"	21'-7¾"	4'-11½"	7'-9 15/16"
W.P. #A5	35'-9 1/16"	32'-6 1/16"	8'-0 11/16"	24'-5⅜"	4'-11 3/16"	8'-9"
W.P. #A6	38'-6¼"	35'-3¼"	8'-0 5/16"	27'-2 15/16"	4'-10 13/16"	9'-8 1/16"
W.P. #A7 (SPAN 6 SIDE)	41'-3 9/16"	38'-0 9/16"	8'-0"	30'-0 9/16"	4'-10½"	10'-7 3/16"

DIMENSIONS IN TABLE ARE BASED ON DISTANCES BETWEEN GIRDERS ALONG BENT CONTROL LINES, THE SKEW ANGLE TO THE BRIDGE CONTROL LINE, AND OVERHANGS THAT ARE A CONSTANT 4'-9" PERPENDICULAR DISTANCE FROM EXTERIOR GIRDERS.

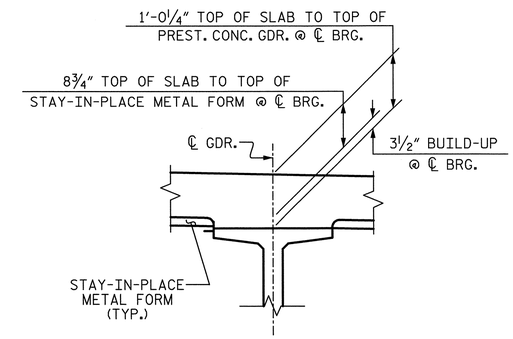

DETAIL "A"

PROJECT NO. U-2524C

GUILFORD COUNTY

STATION: 9+53.33 -RPAY4-

SHEET 2 OF 3

STATE OF NORTH CAROLINA
DEPARTMENT OF TRANSPORTATION
RALEIGH

SUPERSTRUCTURE

TYPICAL SECTION
(3 SPAN CONTINUOUS UNIT 2)
(SPANS 4, 5, & 6)

-RAMP A-

REVISIONS								SHEET NO.
NO.	BY:	DATE:	NO.	BY:	DATE:			S-684
1			3					TOTAL SHEETS
2			4					836

PLANS PREPARED BY:

SIMPSON ENGINEERS & ASSOCIATES
5640 Dillard Drive
Suite 200
Cary, NC 27518
(919) 852-0468
(919) 852-0598 (Fax)
www.simpsonengr.com
LICENSURE NO. C-2521

NORTH CAROLINA PROFESSIONAL SEAL 023906 ENGINEER MARK A. AVERETTE
6-5-2013

DRAWN BY:	R. SEALEY	DATE:	4-13
CHECKED BY:	M. AVERETTE	DATE:	4-13
DESIGN ENGINEER OF RECORD:	M. AVERETTE	DATE:	4-13

6/5/2013 3:43:53 PM G:\Projects\2011\U-2524 (Guilford Co)\Structures\Ramp A\Drawings\Final\U-2524_sd_rpa_ts.dgn

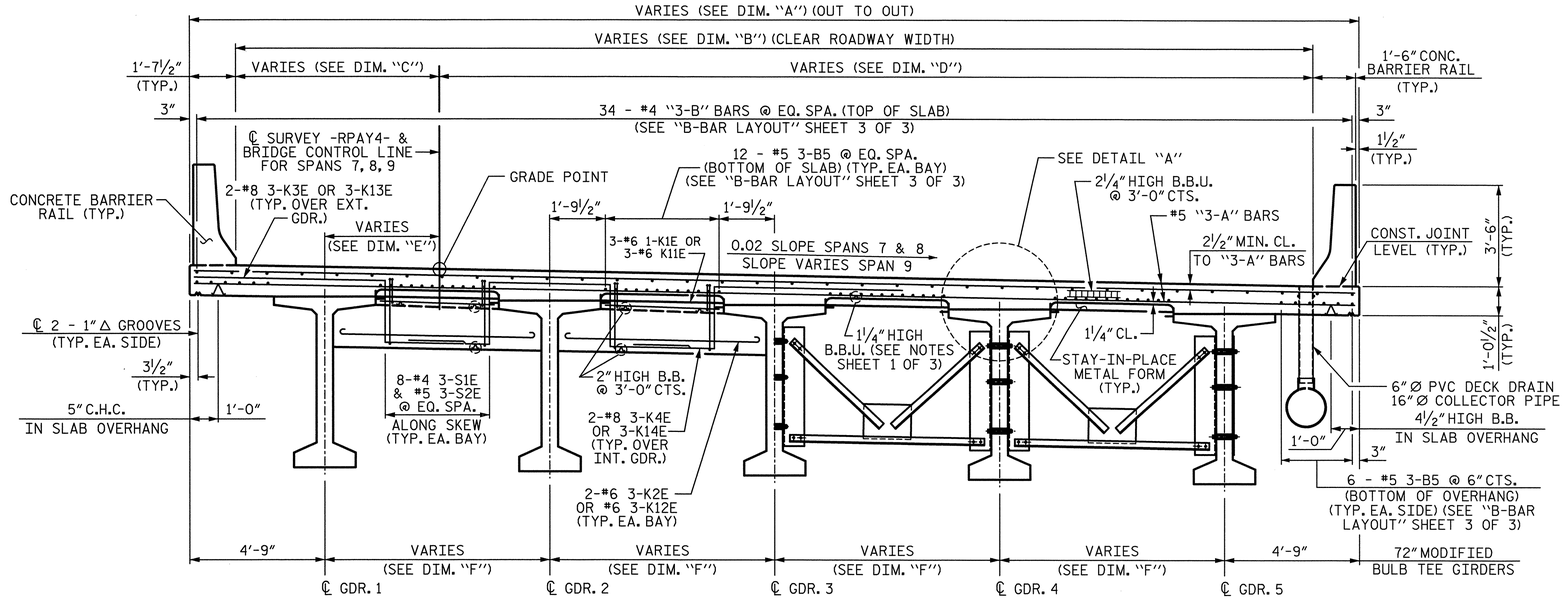

EXPANSION DIAPHRAGMS
(BENT 6 & END BENT 2)

INTERMEDIATE DIAPHRAGMS

TYPICAL SECTION - 3 SPAN CONTINUOUS UNIT 3

(DIAPHRAGM REINFORCING TYPICAL EACH BAY)

CONTINUOUS UNIT 3						
LOCATION	DIM. "A"	DIM. "B"	DIM. "C"	DIM. "D"	DIM. "E"	DIM. "F"
W.P. #A7 (SPAN 7 SIDE)	41'-2⅝"	37'-11⅝"	7'-11½"	30'-0⅛"	4'-10"	7-11⅛"
W.P. #A8	43'-11 5/16"	40'-8⅝"	10'-8 3/16"	30'-0⅛"	7'-6 11/16"	8'-7 5/16"
W.P. #A9	46'-7¾"	43'-4¾"	13'-4⅝"	30'-0⅛"	10'-3 3/16"	9'-3 7/16"
W.P. #A10	49'-4⅞"	46'-1⅞"	16'-1¾"	30'-0⅛"	13'-0 5/16"	9'-11¾"

DIMENSIONS IN TABLE ARE BASED ON DISTANCES BETWEEN GIRDERS ALONG FILL FACE OF END BENT AND BENT CONTROL LINES, THE SKEW ANGLE TO THE BRIDGE CONTROL LINE, AND OVERHANGS THAT ARE A CONSTANT 4'-9" PERPENDICULAR DISTANCE FROM EXTERIOR GIRDERS.

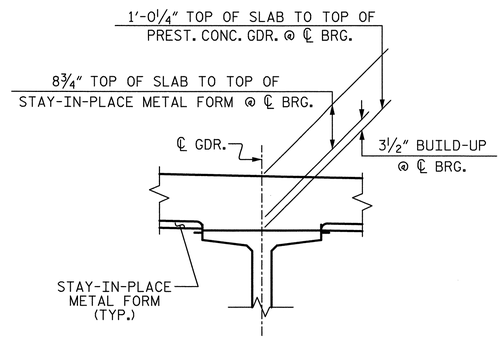

DETAIL "A"

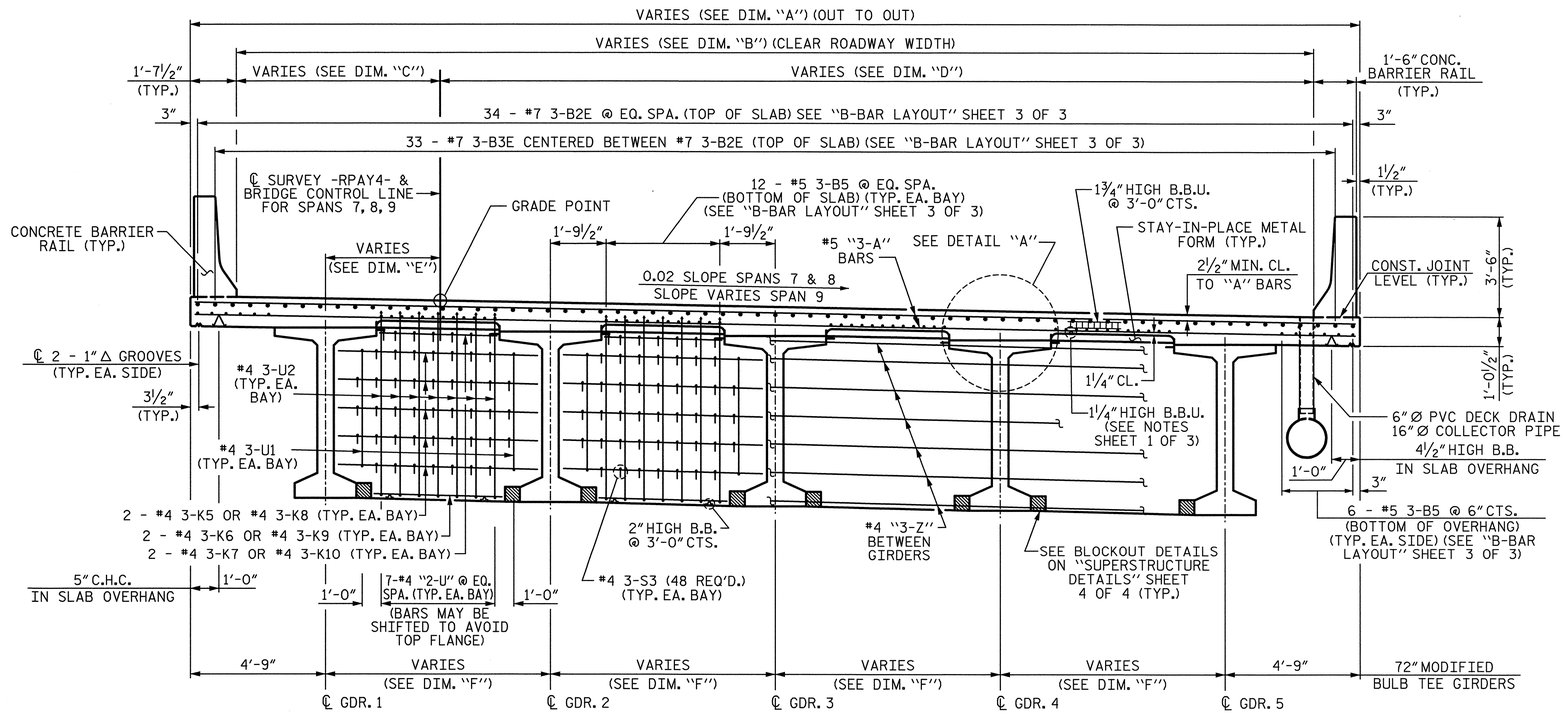

CONTINUOUS BENT DIAPHRAGM
(BENT 7 & BENT 8)

TYPICAL SECTION - 3 SPAN CONTINUOUS UNIT 3

(DIAPHRAGM REINFORCING TYPICAL EACH BAY)

PROJECT NO. U-2524C
GUILFORD COUNTY
STATION: 9+53.33 -RPAY4-

SHEET 3 OF 3

STATE OF NORTH CAROLINA
DEPARTMENT OF TRANSPORTATION
RALEIGH
SUPERSTRUCTURE

TYPICAL SECTION
(3 SPAN CONTINUOUS UNIT 3)
(SPANS 7, 8, & 9)
-RAMP A-

REVISIONS							SHEET NO.
NO.	BY:	DATE:	NO.	BY:	DATE:		S-685
1			3				TOTAL SHEETS
2			4				836

PLANS PREPARED BY:
SIMPSON ENGINEERS & ASSOCIATES
5640 Dillard Drive
Suite 200
Cary, NC 27518
(919) 852-0468
(919) 852-0598 (Fax)
www.simpsonengr.com
LICENSURE NO. C-2521

NORTH CAROLINA PROFESSIONAL SEAL 023906 ENGINEER MARK A. AVERETTE
6-5-2013

DRAWN BY:	R. SEALEY	DATE:	4-13
CHECKED BY:	M. AVERETTE	DATE:	4-13
DESIGN ENGINEER OF RECORD:	M. AVERETTE	DATE:	4-13

6/5/2013 3:43:58 PM G:\Projects\2011\U-2524 (Guilford Co)\Structures\Ramp A\Drawings\Final\U-2524_sd_rpa_ts.dgn

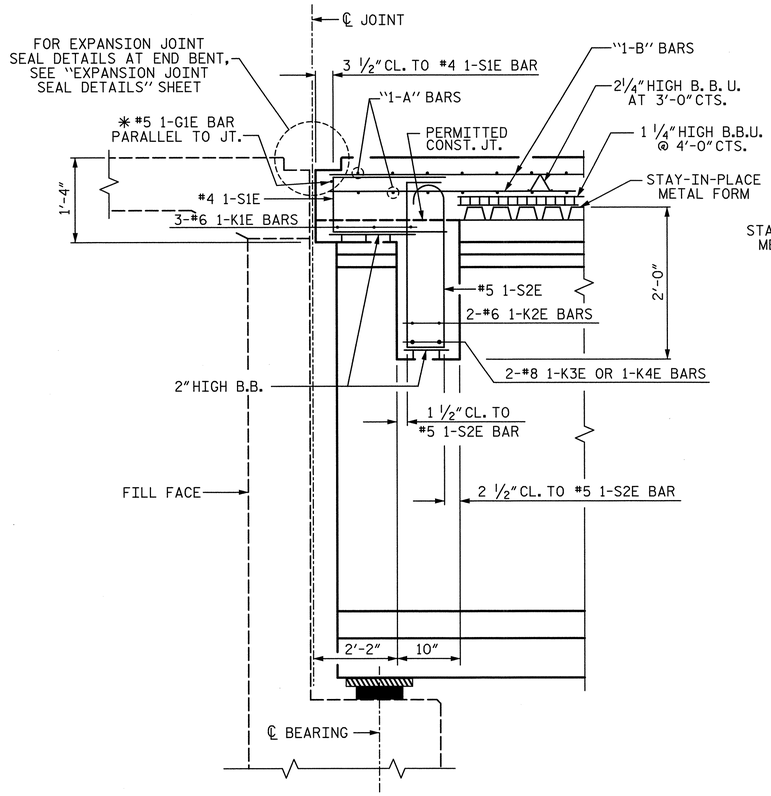

SECTION THRU DIAPHRAGM @ END BENT 1

✱ #5 1-G1E BAR MAY BE SHIFTED SLIGHTLY, AS NECESSARY, TO CLEAR REINFORCING STEEL AND STIRRUPS

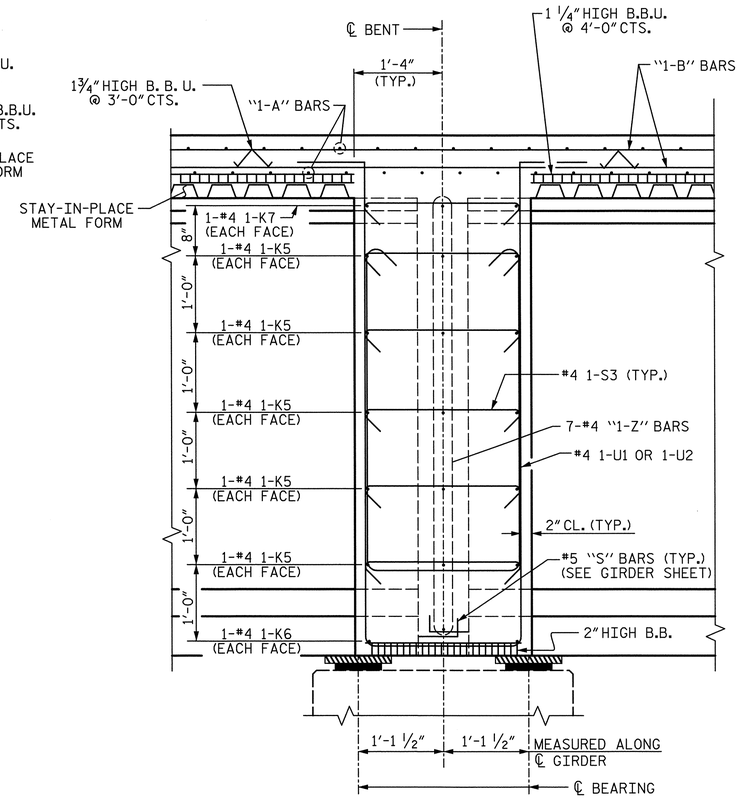

SECTION THRU CONTINUOUS DIAPHRAGM @ BENTS 1 & 2

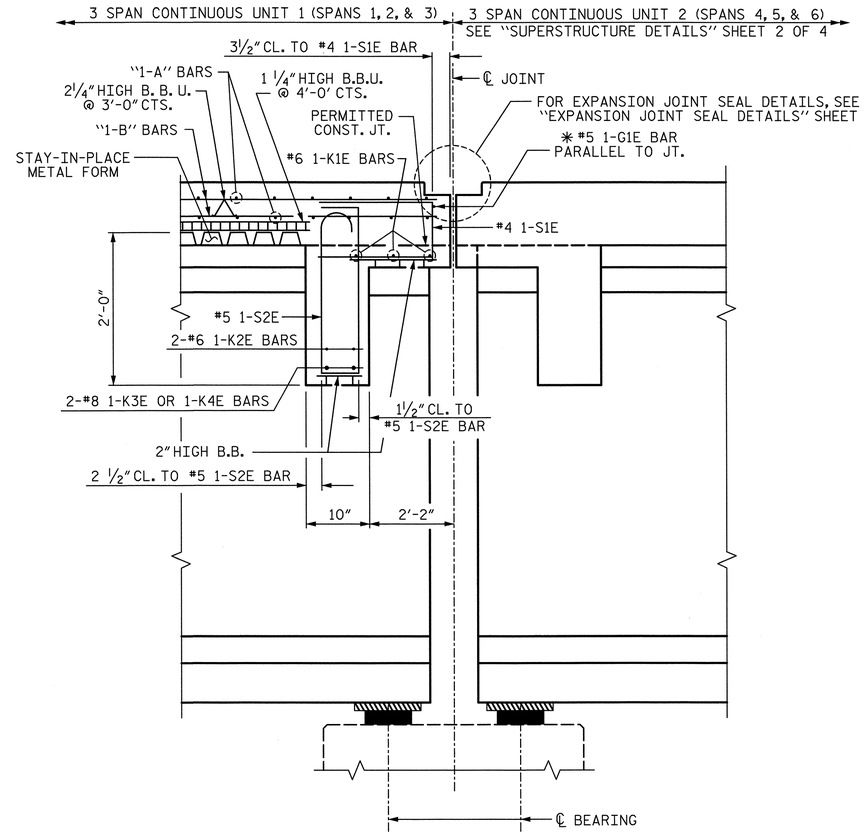

SECTION THRU DIAPHRAGM @ BENT 3

✱ #5 1-G1E BAR MAY BE SHIFTED SLIGHTLY, AS NECESSARY, TO CLEAR REINFORCING STEEL AND STIRRUPS

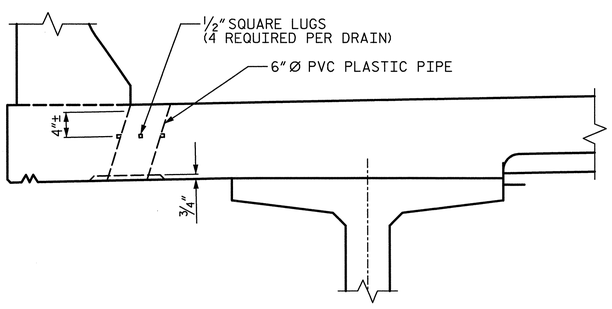

ELEVATION

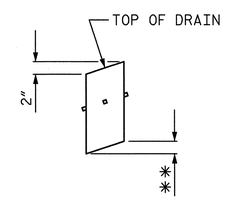

PIPE DETAIL

✱✱ TO BE SET TO MATCH SLOPE OF BOTTOM OF OVERHANGS (18 DRAINS REQUIRED)

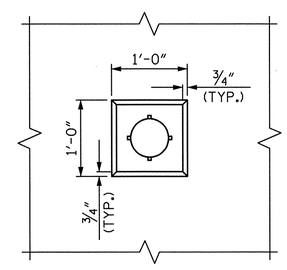

PLAN OF RECESS

DRAIN DETAILS - SPANS 1 & 2

TOP OF FLOOR DRAIN TO BE SET ⅜" BELOW SURFACE OF SLAB.

4 - ½" SQUARE LUGS TO BE GLUED TO THE PVC PLASTIC PIPE AT EQUAL SPACES AROUND THE PIPE DRAIN APPROXIMATELY 4" FROM THE TOP OF PIPE.

THE 6" Ø PVC PLASTIC PIPE AND FITTINGS SHALL BE SCHEDULE 40 AND CONFORM TO ASTM D1785.

PROJECT NO. U-2524C
GUILFORD COUNTY
STATION: 9+53.33 -RPAY4-

SHEET 1 OF 4

STATE OF NORTH CAROLINA
DEPARTMENT OF TRANSPORTATION
RALEIGH
SUPERSTRUCTURE

DETAILS
(3 SPAN CONTINUOUS UNIT 1)
(SPANS 1, 2, & 3)

-RAMP A-

PLANS PREPARED BY:
SIMPSON ENGINEERS & ASSOCIATES
5640 Dillard Drive
Suite 200
Cary, NC 27518
(919) 852-0468
(919) 852-0598 (Fax)
www.simpsonengr.com
LICENSURE NO. C-2521

NORTH CAROLINA PROFESSIONAL SEAL 023906 ENGINEER MARK A. AVERETTE
6-5-2013

REVISIONS						SHEET NO.
NO.	BY:	DATE:	NO.	BY:	DATE:	S-686
1			3			TOTAL SHEETS
2			4			836

DRAWN BY: R. SEALEY DATE: 4-13
CHECKED BY: M. AVERETTE DATE: 4-13
DESIGN ENGINEER OF RECORD: M. AVERETTE DATE: 4-13

6/5/2013 3:44:02 PM G:\Projects\2011\U-2524 (Guilford Co)\Structures\Ramp A\Drawings\Final\U-2524_sd_rpa_ts.dgn

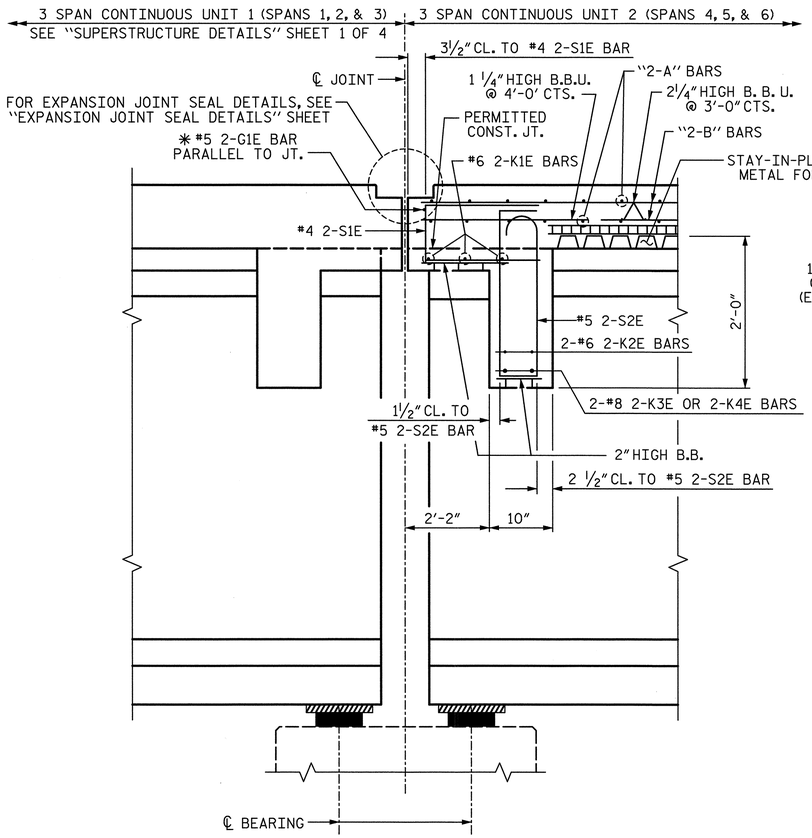

SECTION THRU DIAPHRAGM @ BENT 3

✳ #5 2-G1E BAR MAY BE SHIFTED SLIGHTLY, AS NECESSARY, TO CLEAR REINFORCING STEEL AND STIRRUPS

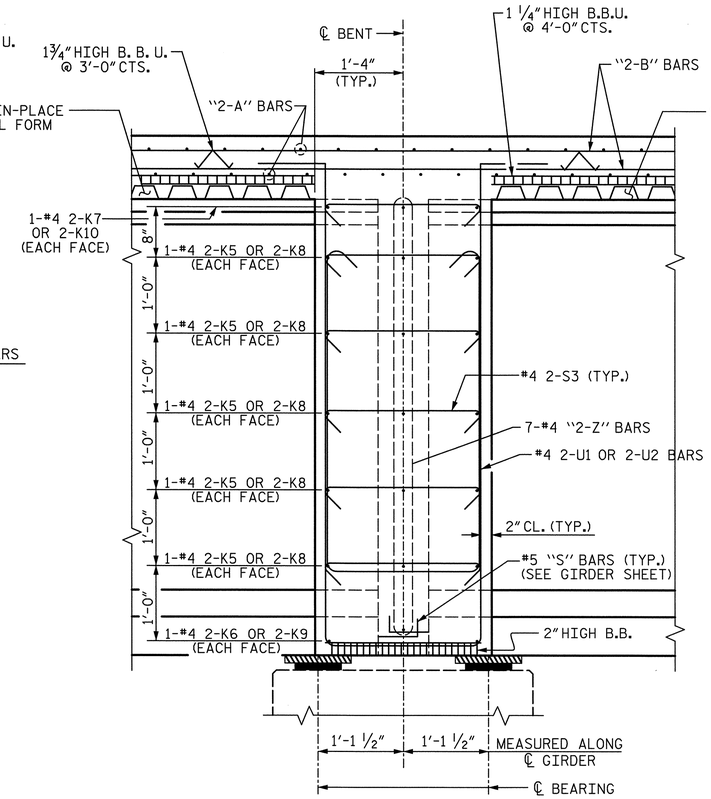

SECTION THRU CONTINUOUS DIAPHRAGM @ BENTS 4 & 5

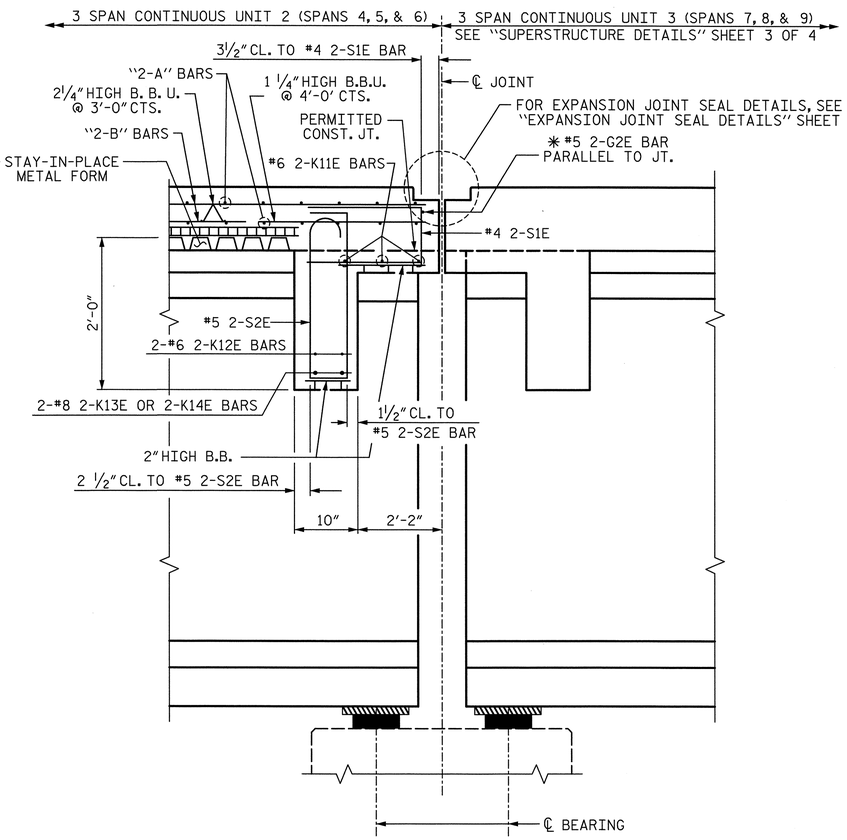

SECTION THRU DIAPHRAGM @ BENT 6

✳ #5 2-G2E BAR MAY BE SHIFTED SLIGHTLY, AS NECESSARY, TO CLEAR REINFORCING STEEL AND STIRRUPS

PROJECT NO. U-2524C

GUILFORD COUNTY

STATION: 9+53.33 -RPAY4-

SHEET 2 OF 4

STATE OF NORTH CAROLINA
DEPARTMENT OF TRANSPORTATION
RALEIGH

SUPERSTRUCTURE

DETAILS
(3 SPAN CONTINUOUS UNIT 2)
(SPANS 4, 5, & 6)

-RAMP A-

PLANS PREPARED BY:

SIMPSON ENGINEERS & ASSOCIATES
5640 Dillard Drive
Suite 200
Cary, NC 27518
(919) 852-0468
(919) 852-0598 (Fax)
www.simpsonengr.com
LICENSURE NO. C-2521

NORTH CAROLINA PROFESSIONAL SEAL 023908 ENGINEER MARK A. AVERETTE
6-5-2013

REVISIONS						SHEET NO.
NO.	BY:	DATE:	NO.	BY:	DATE:	S-687
1			3			TOTAL SHEETS
2			4			836

DRAWN BY: R. SEALEY DATE: 4-13
CHECKED BY: M. AVERETTE DATE: 4-13
DESIGN ENGINEER OF RECORD: M. AVERETTE DATE: 4-13

6/5/2013 3:44:07 PM G:\Projects\2011\U-2524 (Guilford Co)\Structures\Ramp A\Drawings\Final\U-2524_sd_rpa_ts.dgn

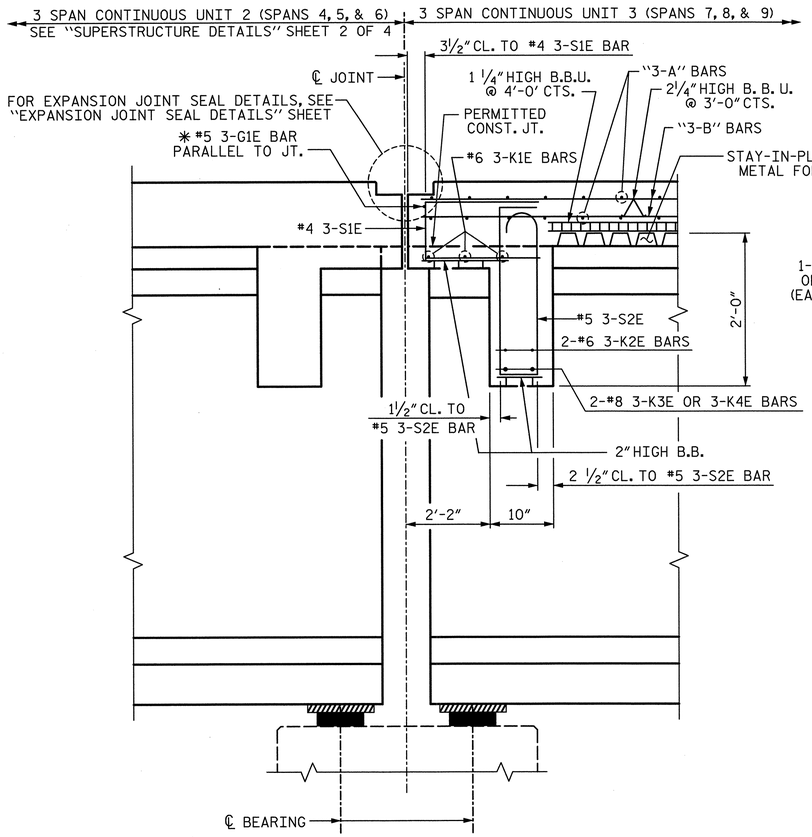

SECTION THRU DIAPHRAGM @ BENT 6

✳ #5 3-G1E BAR MAY BE SHIFTED SLIGHTLY, AS NECESSARY, TO CLEAR REINFORCING STEEL AND STIRRUPS

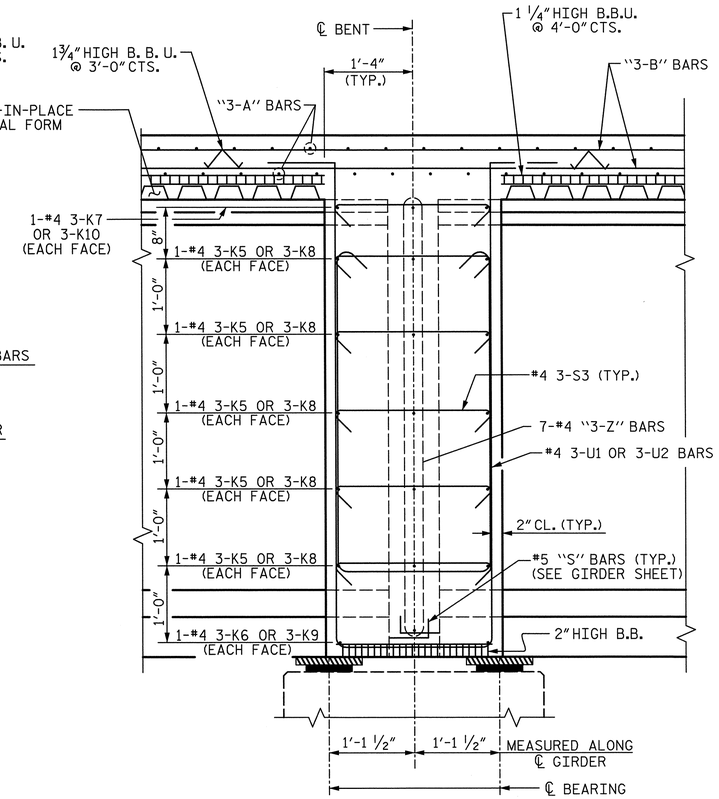

SECTION THRU CONTINUOUS DIAPHRAGM @ BENTS 7 & 8

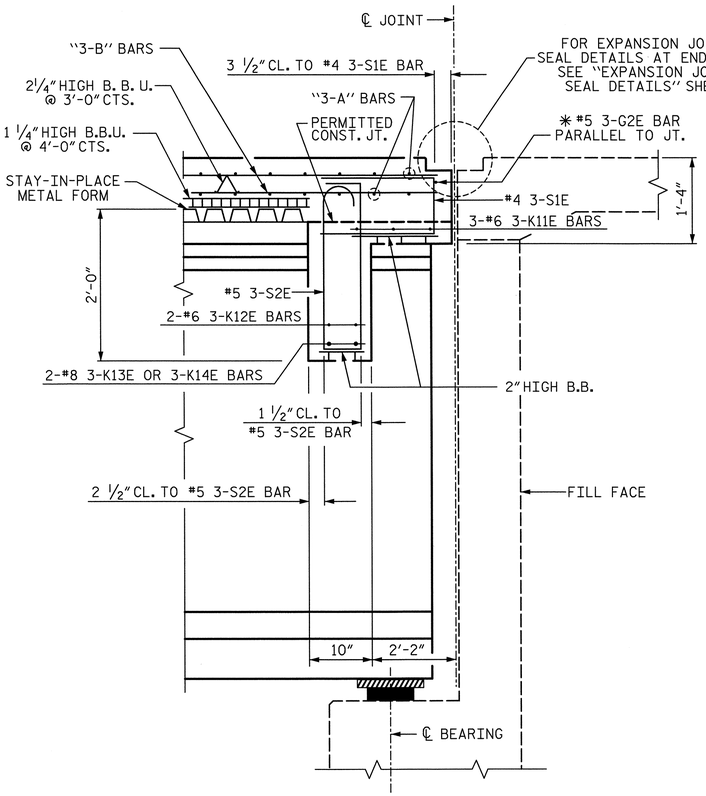

SECTION THRU DIAPHRAGM @ END BENT 2

✳ #5 3-G2E BAR MAY BE SHIFTED SLIGHTLY, AS NECESSARY, TO CLEAR REINFORCING STEEL AND STIRRUPS

PROJECT NO. U-2524C

GUILFORD COUNTY

STATION: 9+53.33 -RPAY4-

SHEET 3 OF 4

STATE OF NORTH CAROLINA
DEPARTMENT OF TRANSPORTATION
RALEIGH

SUPER/SUB STRUCTURE

DETAILS
(3 SPAN CONTINUOUS UNIT 3)
(SPANS 7, 8, & 9)

-RAMP A-

PLANS PREPARED BY:

SIMPSON ENGINEERS & ASSOCIATES
5640 Dillard Drive
Suite 200
Cary, NC 27518
(919) 852-0468
(919) 852-0598 (Fax)
www.simpsonengr.com
LICENSURE NO. C-2521

NORTH CAROLINA PROFESSIONAL SEAL 023906 ENGINEER MARK A. AVERETTE
6-5-2013

REVISIONS								SHEET NO.
NO.	BY:	DATE:	NO.	BY:	DATE:			S-688
1			3					TOTAL SHEETS
2			4					836

DRAWN BY: R. SEALEY DATE: 4-13
CHECKED BY: M. AVERETTE DATE: 4-13
DESIGN ENGINEER OF RECORD: M. AVERETTE DATE: 4-13

6/5/2013 3:44:12 PM G:\Projects\2011\U-2524 (Guilford Co)\Structures\Ramp A\Drawings\Final\U-2524_sd_rpa_ts.dgn

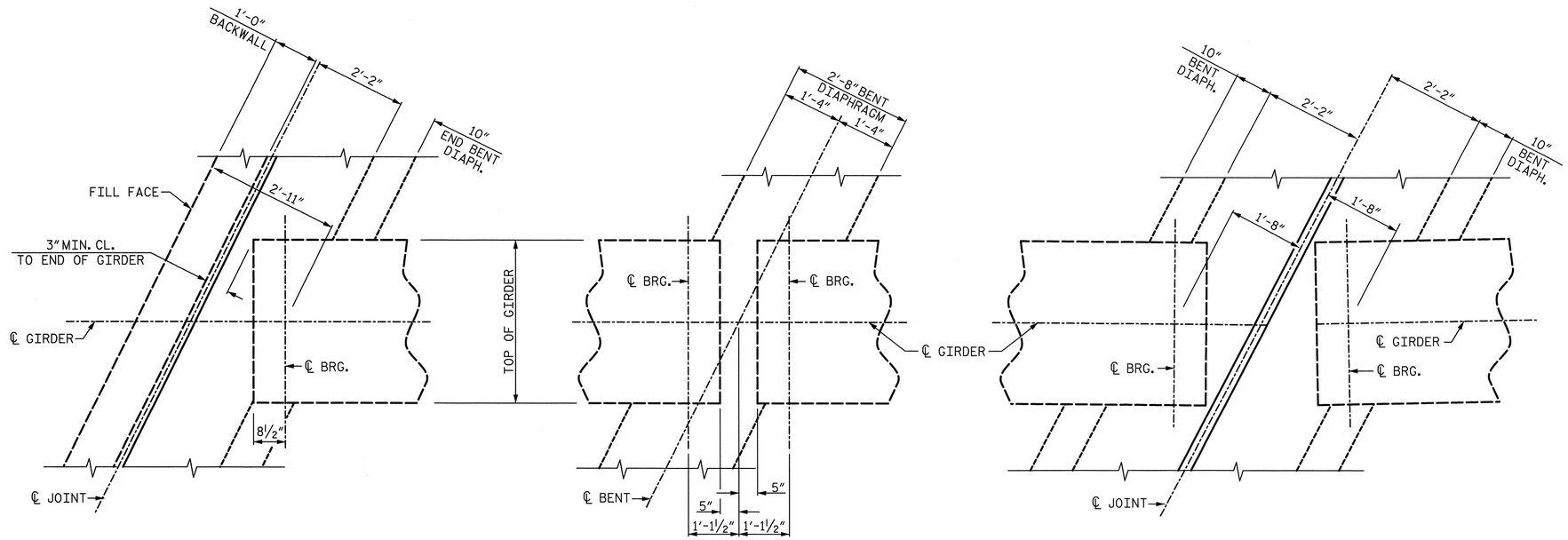

END BENT DIAPHRAGM
END BENT 1 SHOWN, END BENT 2 SIMILAR

CONTINUOUS BENT DIAPHRAGM
@ BENTS 1, 2, 4, 5, 7, & 8

BENT DIAPHRAGM
@ BENTS 3 & 6

PLAN OF DIAPHRAGMS

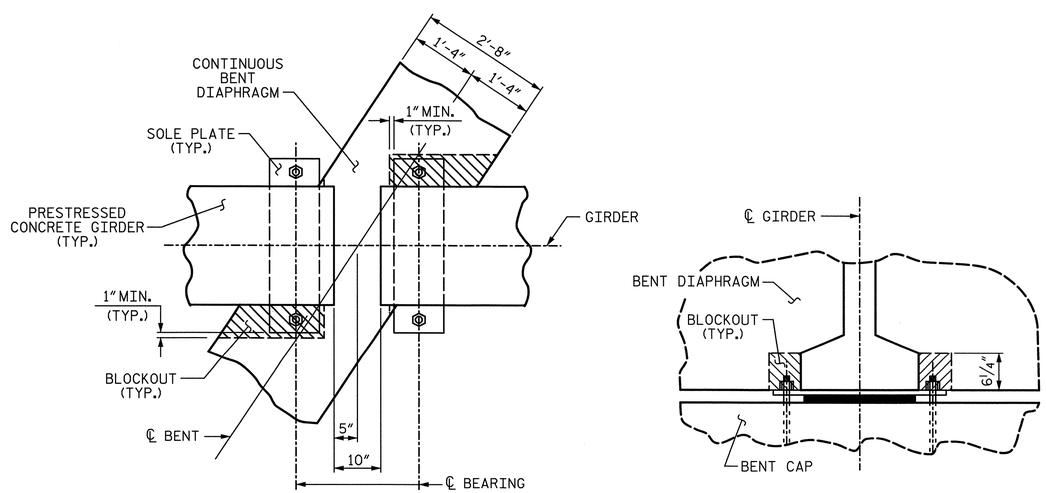

PLAN

SECTION

CONTINUOUS BENT DIAPHRAGM BLOCK-OUT DETAIL

@ BENTS 1, 2, 4, 5, 7 & 8

PROJECT NO. U-2524C
GUILFORD COUNTY
STATION: 9+53.33 -RPAY4-

SHEET 4 OF 4

STATE OF NORTH CAROLINA
DEPARTMENT OF TRANSPORTATION
RALEIGH
SUPERSTRUCTURE

DETAILS

-RAMP A-

PLANS PREPARED BY:
SIMPSON ENGINEERS & ASSOCIATES
5640 Dillard Drive
Suite 200
Cary, NC 27518
(919) 852-0468
(919) 852-0598 (Fax)
www.simpsonengr.com
LICENSURE NO. C-2521

NORTH CAROLINA PROFESSIONAL SEAL 023908 ENGINEER MARK A. AVERETTE
6-5-2013

REVISIONS						SHEET NO.
NO.	BY:	DATE:	NO.	BY:	DATE:	S-689
1			3			TOTAL SHEETS
2			4			836

DRAWN BY: R. SEALEY DATE: 4-13
CHECKED BY: M. AVERETTE DATE: 4-13
DESIGN ENGINEER OF RECORD: M. AVERETTE DATE: 4-13

6/5/2013 3:44:17 PM G:\Projects\2011\U-2524 (Guilford Co)\Structures\Ramp A\Drawings\Final\U-2524_sd_rpa_ts.dgn

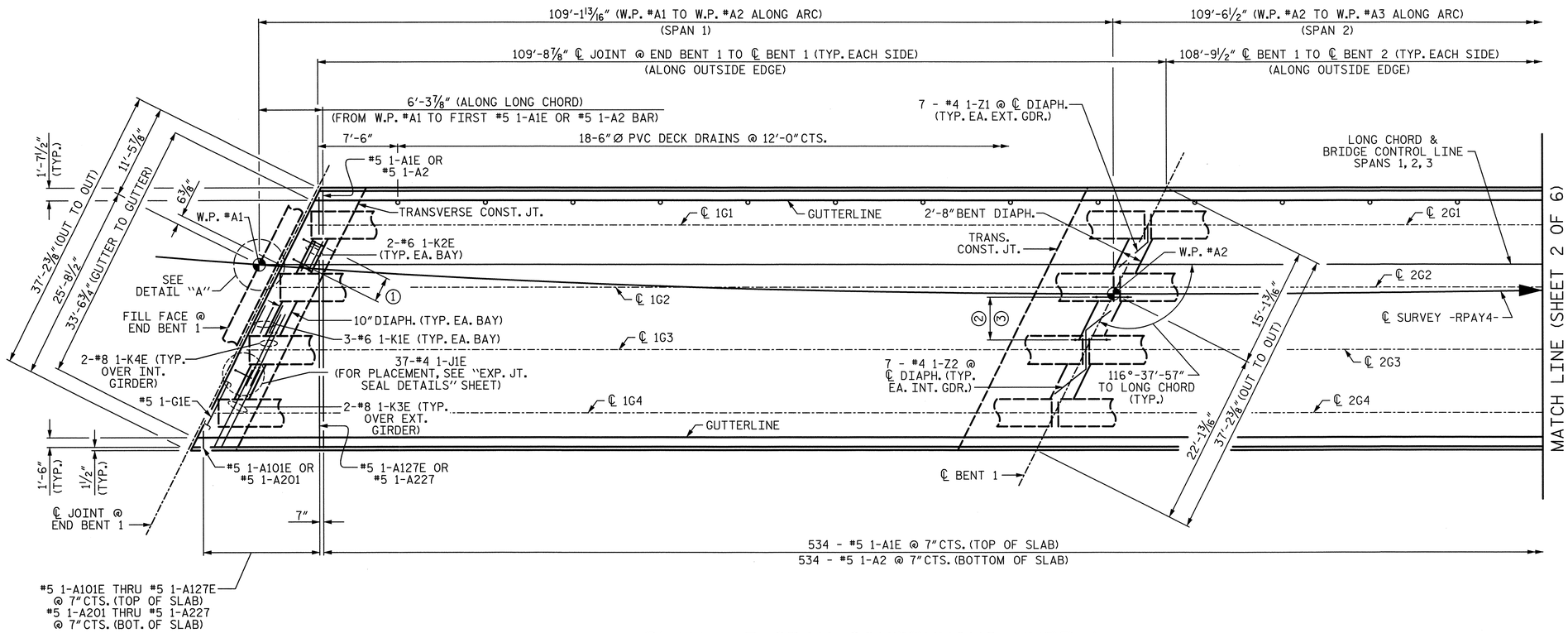

PLAN - 3 SPAN CONTINUOUS UNIT 1

NOTE: "B" BARS NOT SHOWN, SEE "B-BAR LAYOUT" SHEET 1 OF 3 FOR DETAILS

① 5 - #4 1-S1E & #5 1-S2E @ 1'-0" CTS. (TYP. EA. BAY)
② 7 - #4 "1-U" @ 1'-0" CTS. (TYP. EA. BAY)
③ #4 1-S3 (36 REQ'D.) (TYP. EA. BAY)

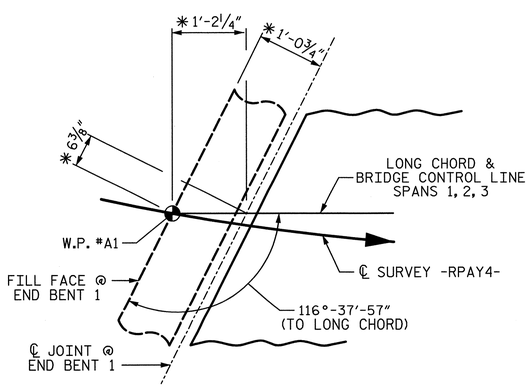

DETAIL "A"

* @ 60° F

NOTES:

THE CONTRACTOR'S ATTENTION IS CALLED TO THE FACT THAT CONTINUOUS UNIT 1 IS TO BE CONSTRUCTED TANGENT TO THE LONG CHORD.

"A" BARS TO BE PLACED PERPENDICULAR TO LONG CHORD.

SEE "CONCRETE BARRIER RAIL" SHEETS FOR ADDITIONAL REINFORCING STEEL IN SLAB & BARRIER RAIL.

SEE "72" PRESTRESSED CONCRETE MODIFIED BULB TEE CONTINUOUS FOR LIVE LOAD (DETAILS)", SHEET 4 OF 4 FOR LOCATION OF INTERMEDIATE DIAPHRAGMS.

SEE "SUPERSTRUCTURE DETAILS" SHEETS FOR SECTIONS THRU END BENT AND BENT DIAPHRAGMS.

SEE "POUR SEQUENCE DETAILS" SHEETS FOR LOCATIONS OF TRANSVERSE CONSTRUCTION JOINTS.

SEE "CLOSED DRAINAGE SYSTEM DETAILS" SHEETS FOR LOCATION OF 6" Ø PVC DECK DRAINS IN SPAN 3.

PROJECT NO. U-2524C
GUILFORD COUNTY
STATION: 9+53.33 -RPAY4-

SHEET 1 OF 6

STATE OF NORTH CAROLINA
DEPARTMENT OF TRANSPORTATION
RALEIGH
SUPERSTRUCTURE

PLAN OF SPANS
(3 SPAN CONTINUOUS UNIT 1)
(SPANS 1, 2, & 3)
-RAMP A-

REVISIONS						SHEET NO.
NO.	BY:	DATE:	NO.	BY:	DATE:	S-690
1			3			TOTAL SHEETS
2			4			836

PLANS PREPARED BY:
SIMPSON ENGINEERS & ASSOCIATES
5640 Dillard Drive
Suite 200
Cary, NC 27518
(919) 852-0468
(919) 852-0598 (Fax)
www.simpsonengr.com
LICENSURE NO. C-2521

NORTH CAROLINA PROFESSIONAL SEAL 023906 ENGINEER MARK A. AVERETTE
6-5-2013

DRAWN BY:	R. SEALEY	DATE:	4-13
CHECKED BY:	M. AVERETTE	DATE:	4-13
DESIGN ENGINEER OF RECORD:	M. AVERETTE	DATE:	4-13

6/5/2013 3:44:22 PM G:\Projects\2011\U-2524 (Guilford Co)\Structures\Ramp A\Drawings\Final\U-2524_sd_rpa_ps.dgn

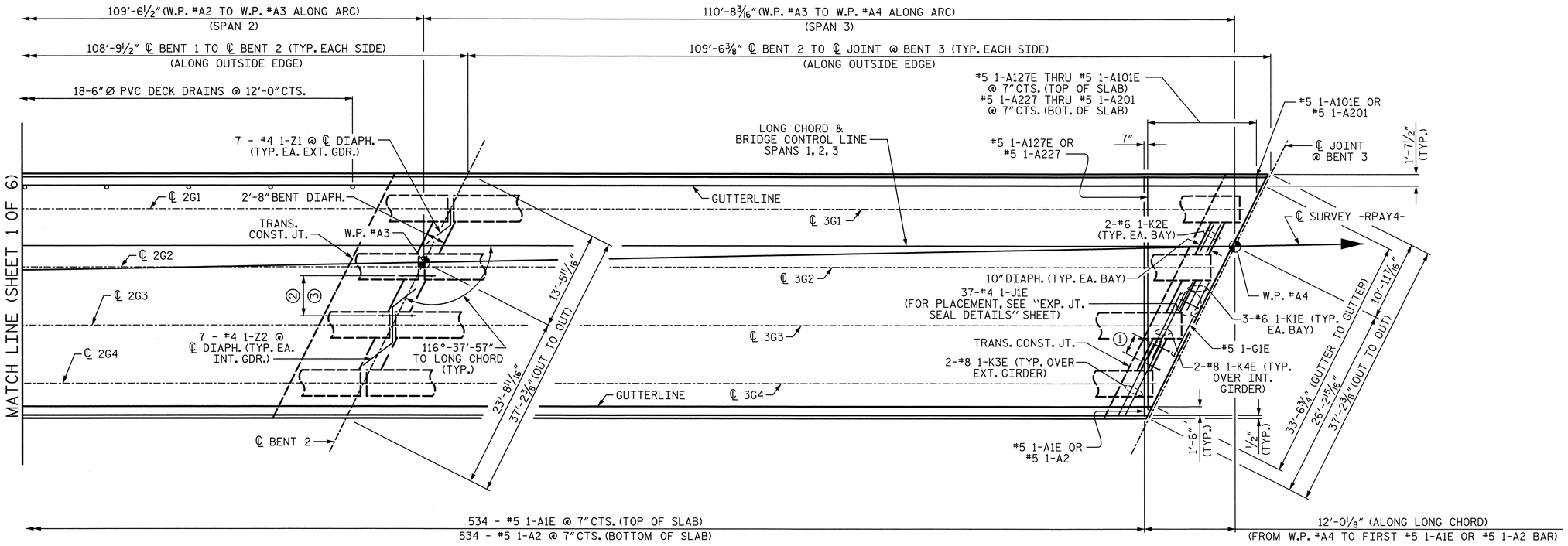

PLAN - 3 SPAN CONTINUOUS UNIT 1

NOTE: "B" BARS NOT SHOWN, SEE "B-BAR LAYOUT" SHEET 1 OF 3 FOR DETAILS

① 5 - #4 1-S1E & #5 1-S2E @ 1'-0" CTS. (TYP. EA. BAY)
② 7 - #4 "1-U" @ 1'-0" CTS. (TYP. EA. BAY)
③ #4 1-S3 (36 REQ'D.) (TYP. EA. BAY)

PROJECT NO. U-2524C
GUILFORD COUNTY
STATION: 9+53.33 -RPAY4-

SHEET 2 OF 6

STATE OF NORTH CAROLINA
DEPARTMENT OF TRANSPORTATION
RALEIGH
SUPERSTRUCTURE

PLAN OF SPANS
(3 SPAN CONTINUOUS UNIT 1)
(SPANS 1, 2, & 3)

-RAMP A-

PLANS PREPARED BY:
SIMPSON ENGINEERS & ASSOCIATES
5640 Dillard Drive
Suite 200
Cary, NC 27518
(919) 852-0468
(919) 852-0598 (Fax)
www.simpsonengr.com
LICENSURE NO. C-2521

NORTH CAROLINA PROFESSIONAL SEAL 023906 ENGINEER MARK A. AVERETTE
6-5-2013

REVISIONS						SHEET NO.
NO.	BY:	DATE:	NO.	BY:	DATE:	S-691
1			3			TOTAL SHEETS
2			4			836

DRAWN BY: R. SEALEY DATE: 4-13
CHECKED BY: M. AVERETTE DATE: 4-13
DESIGN ENGINEER OF RECORD: M. AVERETTE DATE: 4-13

6/5/2013 3:44:27 PM G:\Projects\2011\U-2524 (Guilford Co)\Structures\Ramp A\Drawings\Final\U-2524_sd_rpa_ps.dgn

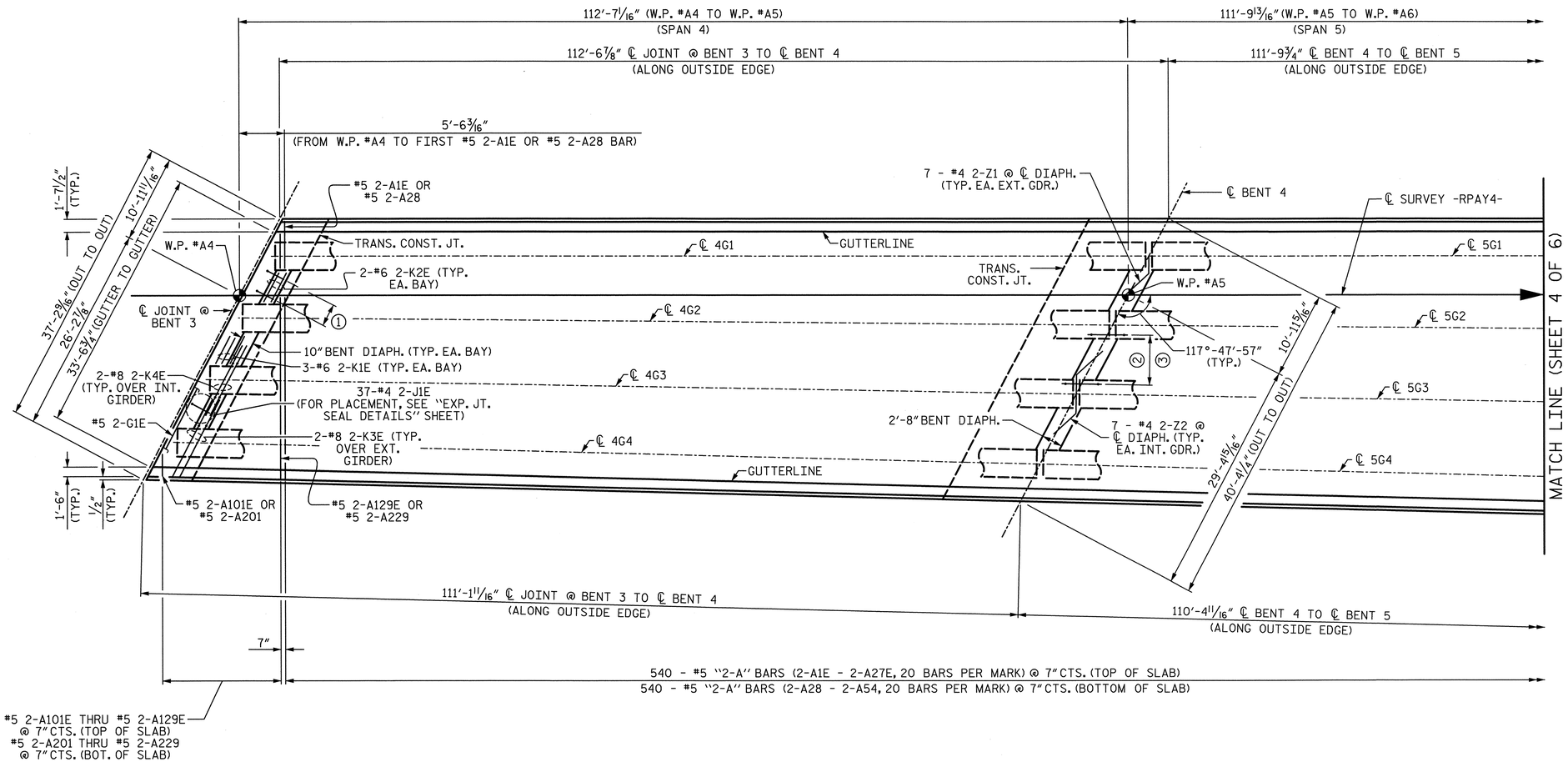

PLAN - 3 SPAN CONTINUOUS UNIT 2

NOTE: "B" BARS NOT SHOWN, SEE "B-BAR LAYOUT" SHEET 2 OF 3 FOR DETAILS

① 8 - #4 2-S1E & #5 2-S2E @ EQ. SPA. (TYP. EA. BAY)
② 2 - #4 2-U1 & 7 - #4 2-U2 @ EQ. SPA. (TYP. EA. BAY)
③ #4 2-S3 (48 REQ'D) (TYP. EA. BAY)

NOTES:

"A" BARS TO BE PLACED PERPENDICULAR TO ℄ SURVEY -RPAY4-.

SEE "CONCRETE BARRIER RAIL" SHEETS FOR ADDITIONAL REINFORCING STEEL IN SLAB & BARRIER RAIL.

SEE "72" PRESTRESSED CONCRETE MODIFIED BULB TEE CONTINUOUS FOR LIVE LOAD (DETAILS)", SHEET 4 OF 4 FOR LOCATION OF INTERMEDIATE DIAPHRAGMS.

SEE "SUPERSTRUCTURE DETAILS" SHEETS FOR SECTIONS THRU END BENT AND BENT DIAPHRAGMS.

SEE "POUR SEQUENCE DETAILS" SHEETS FOR LOCATIONS OF TRANSVERSE CONSTRUCTION JOINTS.

SEE "CLOSED DRAINAGE SYSTEM DETAILS" SHEETS FOR LOCATION OF 6" Ø PVC DECK DRAINS IN SPANS 4, 5 & 6.

PROJECT NO. U-2524C
GUILFORD COUNTY
STATION: 9+53.33 -RPAY4-

SHEET 3 OF 6

STATE OF NORTH CAROLINA
DEPARTMENT OF TRANSPORTATION
RALEIGH

SUPERSTRUCTURE

PLAN OF SPANS
(3 SPAN CONTINUOUS UNIT 2)
(SPANS 4, 5, & 6)

-RAMP A-

PLANS PREPARED BY:
SIMPSON ENGINEERS & ASSOCIATES
5640 Dillard Drive
Suite 200
Cary, NC 27518
(919) 852-0468
(919) 852-0598 (Fax)
www.simpsonengr.com
LICENSURE NO. C-2521

NORTH CAROLINA PROFESSIONAL SEAL 023906 ENGINEER MARK A. AVERETTE
6-5-2013

REVISIONS						
NO.	BY:	DATE:	NO.	BY:	DATE:	
1			3			
2			4			

SHEET NO. S-692
TOTAL SHEETS 836

DRAWN BY: R. SEALEY DATE: 4-13
CHECKED BY: M. AVERETTE DATE: 4-13
DESIGN ENGINEER OF RECORD: M. AVERETTE DATE: 4-13

6/5/2013 3:44:32 PM G:\Projects\2011\U-2524 (Guilford Co)\Structures\Ramp A\Drawings\Final\U-2524_sd_rpa_ps.dgn

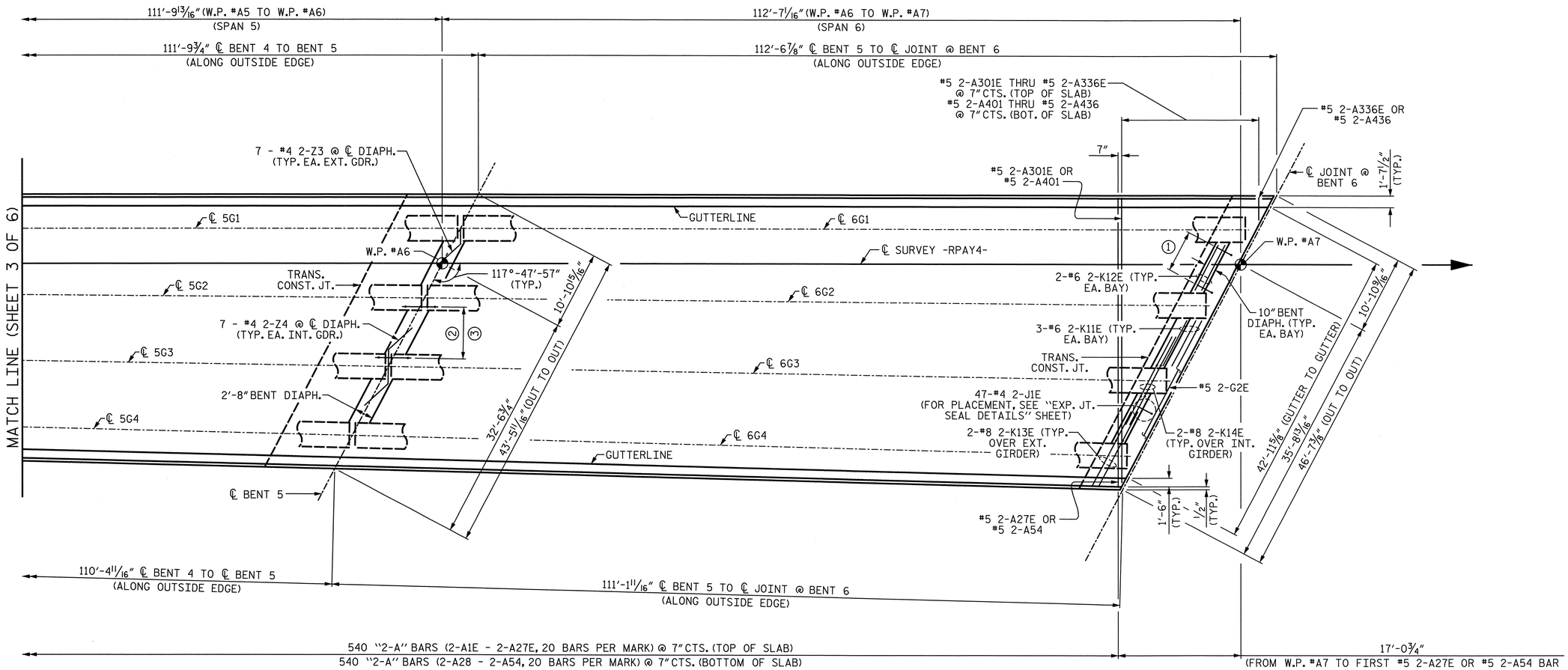

PLAN - 3 SPAN CONTINUOUS UNIT 2

NOTE: "B" BARS NOT SHOWN, SEE "B-BAR LAYOUT" SHEET 2 OF 3 FOR DETAILS

① 8 - #4 2-S1E & #5 2-S2E @ EQ. SPA. (TYP. EA. BAY)
② 2 - #4 2-U1 & 7 - #4 2-U2 @ EQ. SPA. (TYP. EA. BAY)
③ #4 2-S3 (48 REQ'D.) (TYP. EA. BAY)

PROJECT NO. U-2524C
GUILFORD COUNTY
STATION: 9+53.33 -RPAY4-

SHEET 4 OF 6

STATE OF NORTH CAROLINA
DEPARTMENT OF TRANSPORTATION
RALEIGH
SUPERSTRUCTURE

PLAN OF SPANS
(3 SPAN CONTINUOUS UNIT 2)
(SPANS 4, 5, & 6)

-RAMP A-

PLANS PREPARED BY:
SIMPSON ENGINEERS & ASSOCIATES
5640 Dillard Drive
Suite 200
Cary, NC 27518
(919) 852-0468
(919) 852-0598 (Fax)
www.simpsonengr.com
LICENSURE NO. C-2521

NORTH CAROLINA PROFESSIONAL SEAL 023906 ENGINEER MARK A. AVERETTE
6-5-2013

REVISIONS								SHEET NO.
NO.	BY:	DATE:	NO.	BY:	DATE:			S-693
1			3					TOTAL SHEETS
2			4					836

DRAWN BY: R. SEALEY DATE: 4-13
CHECKED BY: M. AVERETTE DATE: 4-13
DESIGN ENGINEER OF RECORD: M. AVERETTE DATE: 4-13

6/5/2013 3:44:37 PM G:\Projects\2011\U-2524 (Guilford Co)\Structures\Ramp A\Drawings\Final\U-2524_sd_rpa_ps.dgn

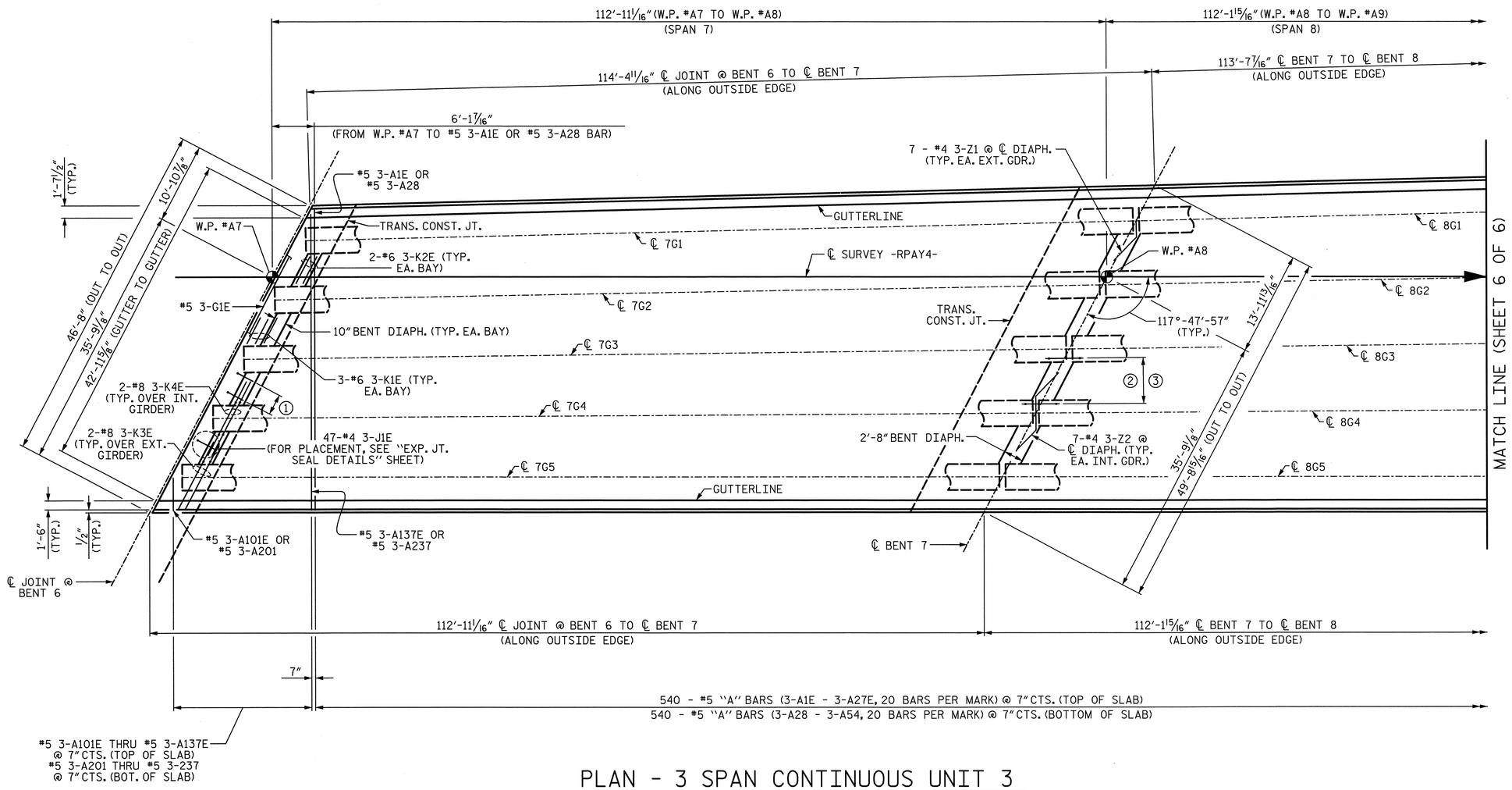

PLAN - 3 SPAN CONTINUOUS UNIT 3

NOTE: "B" BARS NOT SHOWN, SEE "B-BAR LAYOUT" SHEET 3 OF 3 FOR DETAILS

① 8 - #4 3-S1E & #5 3-S2E @ EQ. SPA. (TYP. EA. BAY)
② 2 - #4 3-U1 & 7 - #4 3-U2 @ EQ. SPA. (TYP. EA. BAY)
③ #4 3-S3 (48 REQ'D.) (TYP. EA. BAY)

NOTES:

"A" BARS TO BE PLACED PERPENDICULAR TO ℄ SURVEY -RPAY4-.

SEE "CONCRETE BARRIER RAIL" SHEETS FOR ADDITIONAL REINFORCING STEEL IN SLAB & BARRIER RAIL.

SEE "72" PRESTRESSED CONCRETE MODIFIED BULB TEE CONTINUOUS FOR LIVE LOAD (DETAILS)", SHEET 4 OF 4 FOR LOCATION OF INTERMEDIATE DIAPHRAGMS.

SEE "SUPERSTRUCTURE DETAILS" SHEETS FOR SECTIONS THRU END BENT AND BENT DIAPHRAGMS.

SEE "POUR SEQUENCE DETAILS" SHEETS FOR LOCATIONS OF TRANSVERSE CONSTRUCTION JOINTS.

SEE "CLOSED DRAINAGE SYSTEM DETAILS" SHEETS FOR LOCATION OF 6" Ø PVC DECK DRAINS IN SPANS 7, 8 & 9.

PROJECT NO. U-2524C
GUILFORD COUNTY
STATION: 9+53.33 -RPAY4-

SHEET 5 OF 6

STATE OF NORTH CAROLINA
DEPARTMENT OF TRANSPORTATION
RALEIGH
SUPERSTRUCTURE

PLAN OF SPANS
(3 SPAN CONTINUOUS UNIT 3)
(SPANS 7, 8, & 9)

-RAMP A-

PLANS PREPARED BY:
SIMPSON ENGINEERS & ASSOCIATES
5640 Dillard Drive
Suite 200
Cary, NC 27518
(919) 852-0468
(919) 852-0598 (Fax)
www.simpsonengr.com
LICENSURE NO. C-2521

NORTH CAROLINA PROFESSIONAL SEAL 023906 ENGINEER MARK A. AVERETTE
6-5-2013

REVISIONS								SHEET NO.
NO.	BY:	DATE:	NO.	BY:	DATE:			S-694
1			3					TOTAL SHEETS
2			4					836

DRAWN BY: R. SEALEY DATE: 4-13
CHECKED BY: M. AVERETTE DATE: 4-13
DESIGN ENGINEER OF RECORD: M. AVERETTE DATE: 4-13

6/5/2013 3:44:42 PM G:\Projects\2011\U-2524 (Guilford Co)\Structures\Ramp A\Drawings\Final\U-2524_sd_rpa_ps.dgn

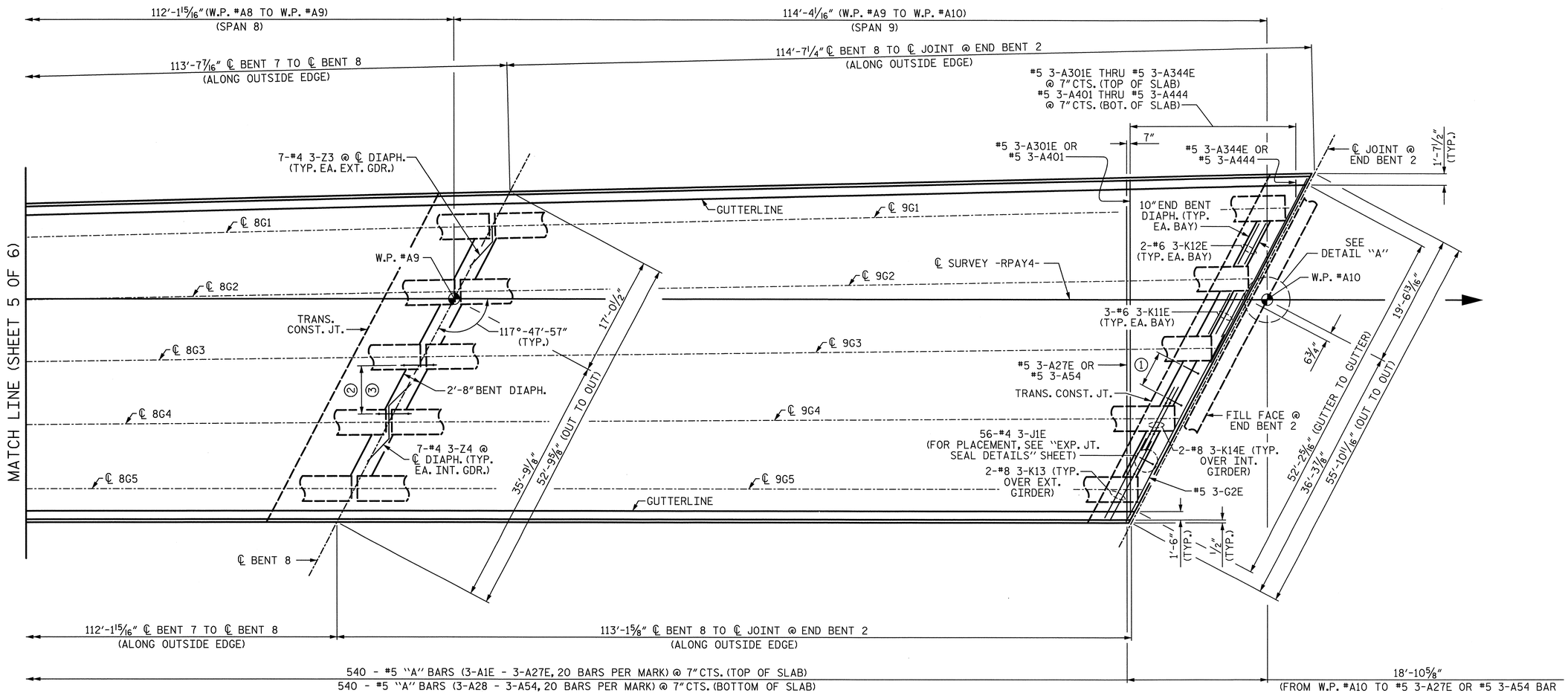

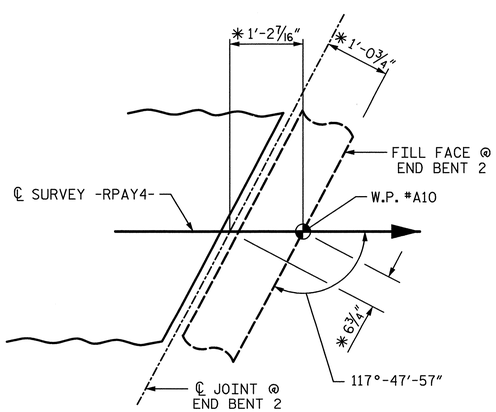

DETAIL "A"

* @ 60° F

PLAN - 3 SPAN CONTINUOUS UNIT 3

NOTE: "B" BARS NOT SHOWN, SEE "B-BAR LAYOUT" SHEET 3 OF 3 FOR DETAILS

1. 8 - #4 3-S1E & #5 3-S2E @ EQ. SPA. (TYP. EA. BAY)
2. 2 - #4 3-U1 & 7 - #4 3-U2 @ EQ. SPA. (TYP. EA. BAY)
3. #4 3-S3 (48 REQ'D.) (TYP. EA. BAY)

PROJECT NO. U-2524C

GUILFORD COUNTY

STATION: 9+53.33 -RPAY4-

SHEET 6 OF 6

STATE OF NORTH CAROLINA
DEPARTMENT OF TRANSPORTATION
RALEIGH

SUPERSTRUCTURE

PLAN OF SPANS
(3 SPAN CONTINUOUS UNIT 3)
(SPANS 7, 8, & 9)

-RAMP A-

PLANS PREPARED BY:

SIMPSON ENGINEERS & ASSOCIATES
5640 Dillard Drive
Suite 200
Cary, NC 27518
(919) 852-0468
(919) 852-0598 (Fax)
www.simpsonengr.com

LICENSURE NO. C-2521

NORTH CAROLINA PROFESSIONAL SEAL 023906 ENGINEER MARK A. AVERETTE
6-5-2013

REVISIONS						SHEET NO.
NO.	BY:	DATE:	NO.	BY:	DATE:	S-695
1			3			TOTAL SHEETS
2			4			836

DRAWN BY: R. SEALEY DATE: 4-13
CHECKED BY: M. AVERETTE DATE: 4-13
DESIGN ENGINEER OF RECORD: M. AVERETTE DATE: 4-13

6/5/2013 3:44:47 PM G:\Projects\2011\U-2524 (Guilford Co)\Structures\Ramp A\Drawings\Final\U-2524_sd_rpa_ps.dgn

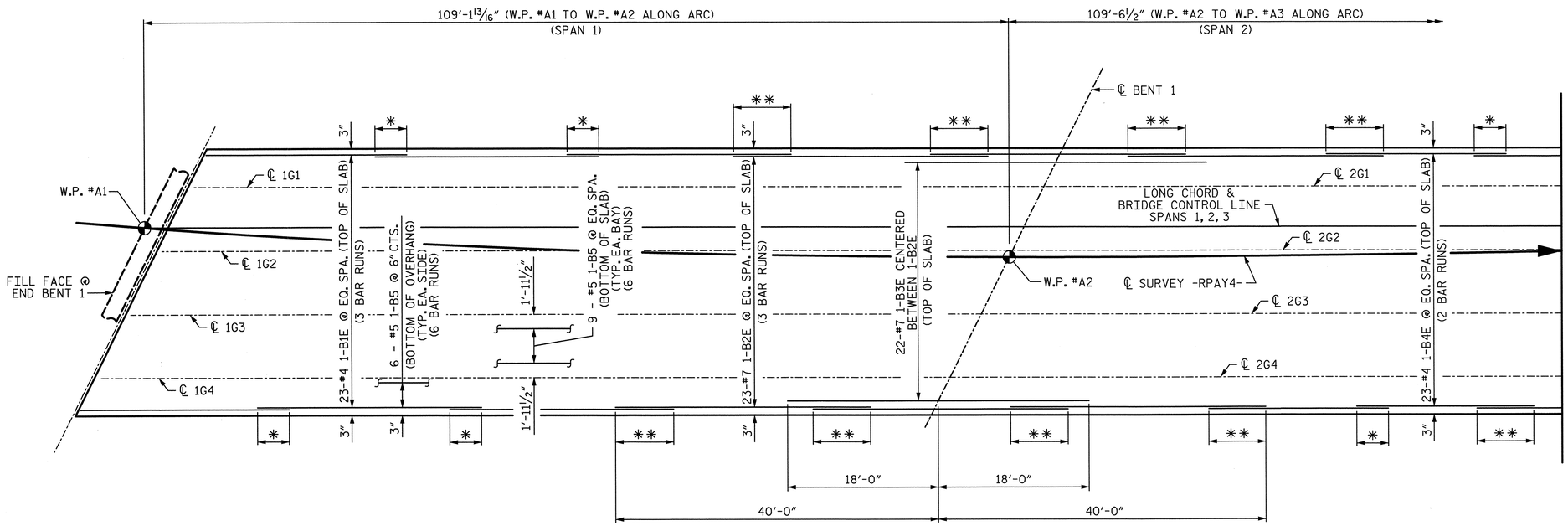

SPAN 1 SPAN 2

B-BAR LAYOUT - 3 SPAN CONTINUOUS UNIT 1

HALF SPAN SHOWN, OTHER HALF SIMILAR BY ROTATION

* = 2'-0" MIN. SPLICE
** = 5'-3" MIN. SPLICE

PROJECT NO. U-2524C

GUILFORD COUNTY

STATION: 9+53.33 -RPAY4-

SHEET 1 OF 3

STATE OF NORTH CAROLINA
DEPARTMENT OF TRANSPORTATION
RALEIGH
SUPERSTRUCTURE

B-BAR LAYOUT
(3 SPAN CONTINUOUS UNIT 1)
(SPANS 1, 2, & 3)

-RAMP A-

PLANS PREPARED BY:
SIMPSON ENGINEERS & ASSOCIATES
5640 Dillard Drive
Suite 200
Cary, NC 27518
(919) 852-0468
(919) 852-0598 (Fax)
www.simpsonengr.com
LICENSURE NO. C-2521

NORTH CAROLINA PROFESSIONAL SEAL 023906 ENGINEER MARK A. AVERETTE
6-5-2013

REVISIONS						SHEET NO.
NO.	BY:	DATE:	NO.	BY:	DATE:	S-696
1			3			TOTAL SHEETS
2			4			836

DRAWN BY: R. SEALEY DATE: 4-13
CHECKED BY: M. AVERETTE DATE: 4-13
DESIGN ENGINEER OF RECORD: M. AVERETTE DATE: 4-13

6/5/2013 3:44:51 PM G:\Projects\2011\U-2524 (Guilford Co)\Structures\Ramp A\Drawings\Final\U-2524_sd_rpa_ps.dgn

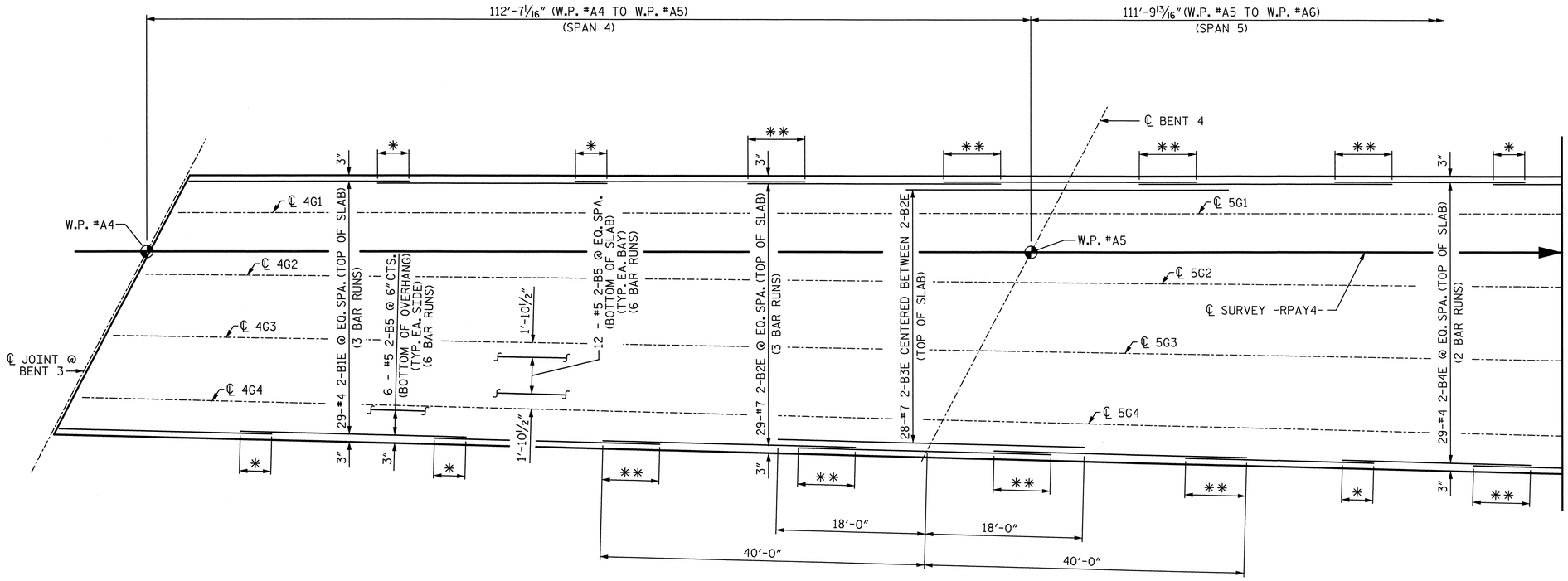

B-BAR LAYOUT - 3 SPAN CONTINUOUS UNIT 2

HALF SPAN SHOWN, OTHER HALF SIMILAR BY ROTATION

* = 2'-0" MIN. SPLICE
** = 5'-3" MIN. SPLICE

PROJECT NO. U-2524C

GUILFORD COUNTY

STATION: 9+53.33 -RPAY4-

SHEET 2 OF 3

STATE OF NORTH CAROLINA
DEPARTMENT OF TRANSPORTATION
RALEIGH

SUPERSTRUCTURE

B-BAR LAYOUT
(3 SPAN CONTINUOUS UNIT 2)
(SPANS 4, 5, & 6)

-RAMP A-

PLANS PREPARED BY:

SIMPSON ENGINEERS & ASSOCIATES
5640 Dillard Drive
Suite 200
Cary, NC 27518
(919) 852-0468
(919) 852-0598 (Fax)
www.simpsonengr.com
LICENSURE NO. C-2521

NORTH CAROLINA PROFESSIONAL SEAL 023906 ENGINEER MARK A. AVERETTE
6-5-2013

REVISIONS								SHEET NO.
NO.	BY:	DATE:	NO.	BY:	DATE:			S-697
1			3					TOTAL SHEETS
2			4					836

DRAWN BY: R. SEALEY DATE: 4-13
CHECKED BY: M. AVERETTE DATE: 4-13
DESIGN ENGINEER OF RECORD: M. AVERETTE DATE: 4-13

6/5/2013 3:44:56 PM G:\Projects\2011\U-2524 (Guilford Co)\Structures\Ramp A\Drawings\Final\U-2524_sd_rpa_ps.dgn

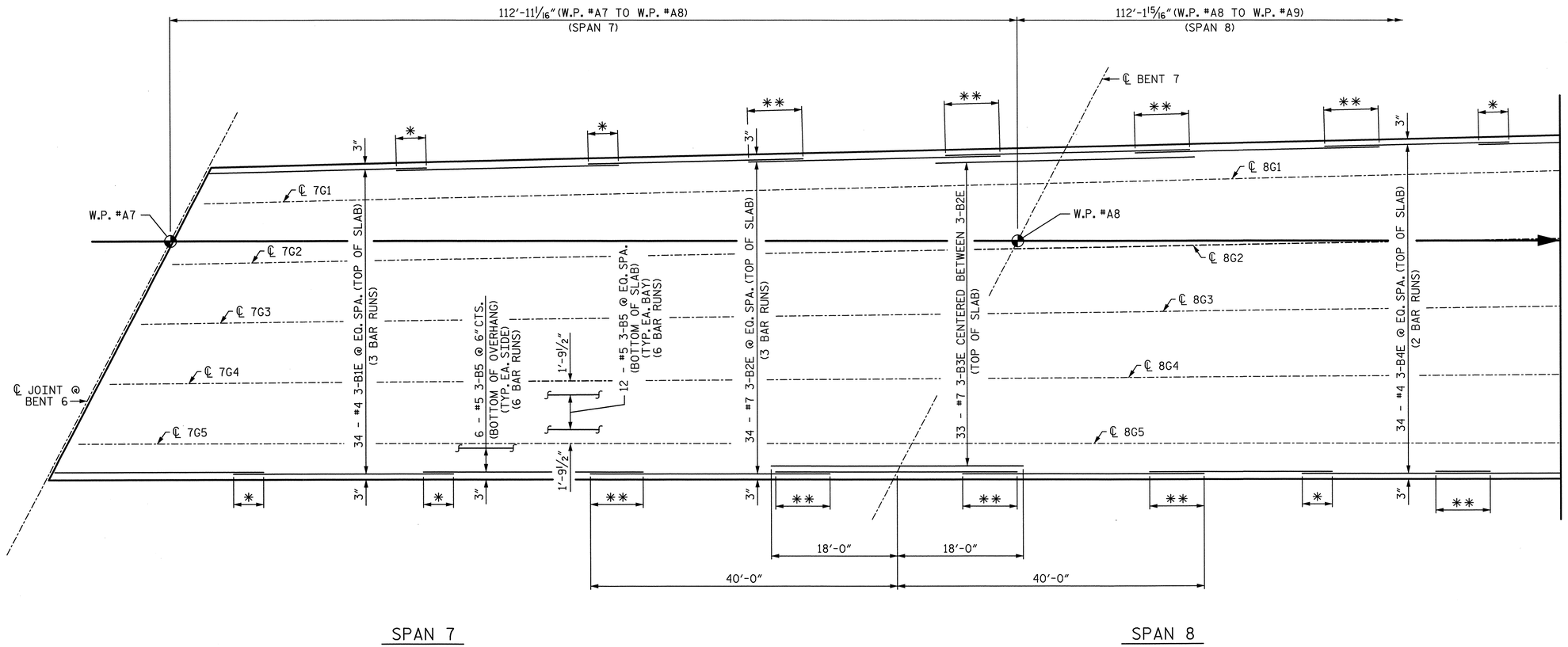

B-BAR LAYOUT - 3 SPAN CONTINUOUS UNIT 3

HALF SPAN SHOWN, OTHER HALF SIMILAR BY ROTATION

* = 2'-0" MIN. SPLICE
** = 5'-3" MIN. SPLICE

PROJECT NO. U-2524C

GUILFORD COUNTY

STATION: 9+53.33 -RPAY4-

SHEET 3 OF 3

STATE OF NORTH CAROLINA
DEPARTMENT OF TRANSPORTATION
RALEIGH

SUPERSTRUCTURE

B-BAR LAYOUT
(3 SPAN CONTINUOUS UNIT 3)
(SPANS 7, 8, & 9)

-RAMP A-

PLANS PREPARED BY:

SIMPSON ENGINEERS & ASSOCIATES
5640 Dillard Drive
Suite 200
Cary, NC 27518
(919) 852-0468
(919) 852-0598 (Fax)
www.simpsonengr.com
LICENSURE NO. C-2521

NORTH CAROLINA PROFESSIONAL SEAL 023906 ENGINEER MARK A. AVERETTE
6-5-2013

REVISIONS								SHEET NO.
NO.	BY:	DATE:	NO.	BY:	DATE:			S-698
1			3					TOTAL SHEETS
2			4					836

DRAWN BY: R. SEALEY DATE: 4-13
CHECKED BY: M. AVERETTE DATE: 4-13
DESIGN ENGINEER OF RECORD: M. AVERETTE DATE: 4-13

6/5/2013 3:45:01 PM G:\Projects\2011\U-2524 (Guilford Co)\Structures\Ramp A\Drawings\Final\U-2524_sd_rpa_ps.dgn

NOTES:

1. FOR COLLECTOR PIPE SUPPORTS, SEE SHEET 3 OF 5.
2. FOR ADDITIONAL NOTES, SEE SHEET 5 OF 5.

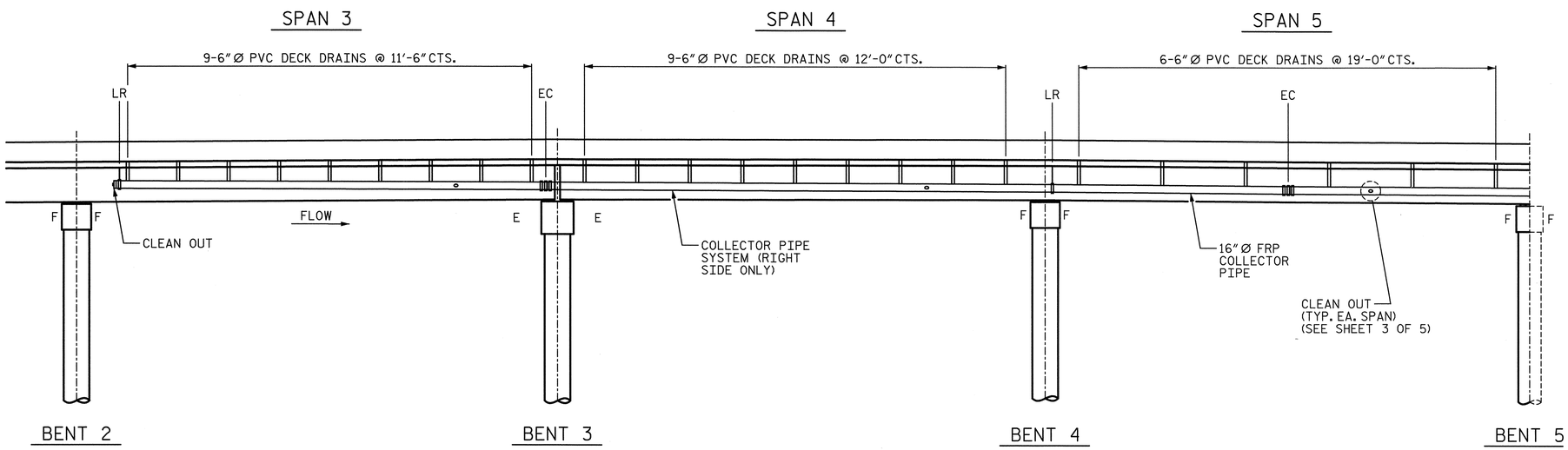

ELEVATION

EC = EXPANSION COUPLER (SEE SHEET 3 OF 5 FOR DETAILS)
LR = LONGITUDINAL RESTRAINT (SEE SHEET 3 OF 5 FOR DETAILS)

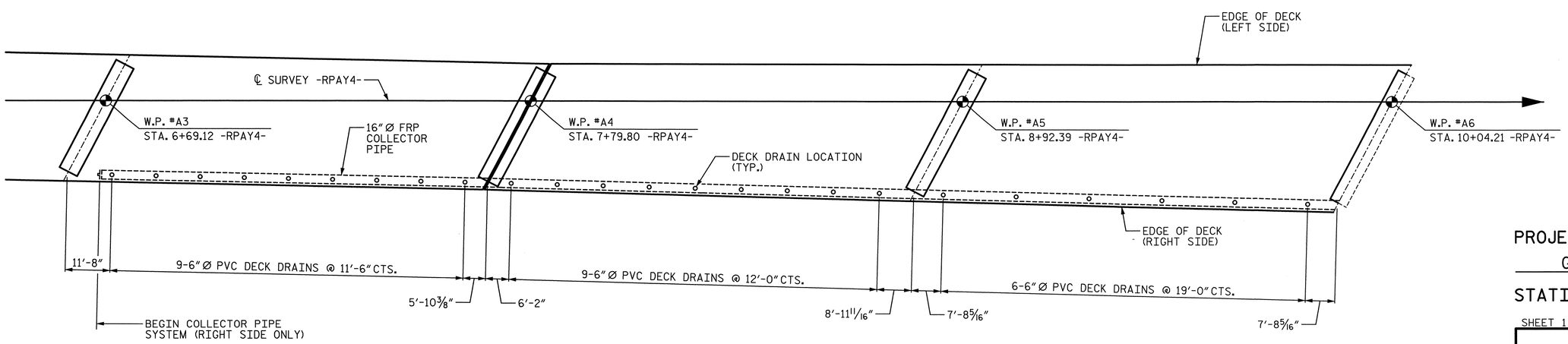

PLAN

(GIRDERS NOT SHOWN FOR CLARITY)
(DIMENSIONS ARE MEASURED @ CENTERLINE OF 6"Ø DECK DRAINS FROM ℄ BENT TO ℄ BENT OR ℄ JOINT)

PROJECT NO. U-2524C
GUILFORD COUNTY
STATION: 9+53.33 -RPAY4-

SHEET 1 OF 5

STATE OF NORTH CAROLINA
DEPARTMENT OF TRANSPORTATION
RALEIGH

SUPERSTRUCTURE

STRUCTURE DRAINAGE SYSTEM DETAILS

-RAMP A-

PLANS PREPARED BY:

SIMPSON ENGINEERS & ASSOCIATES
5640 Dillard Drive
Suite 200
Cary, NC 27518
(919) 852-0468
(919) 852-0598 (Fax)
www.simpsonengr.com
LICENSURE NO. C-2521

NORTH CAROLINA PROFESSIONAL SEAL 023906 ENGINEER MARK A. AVERETTE
6-5-2013

REVISIONS								SHEET NO.
NO.	BY:	DATE:	NO.	BY:	DATE:			S-699
1			3					TOTAL SHEETS
2			4					836

DRAWN BY: R. SEALEY DATE: 4-13
CHECKED BY: M. AVERETTE DATE: 4-13
DESIGN ENGINEER OF RECORD: M. AVERETTE DATE: 4-13

6/5/2013 3:45:06 PM G:\Projects\2011\U-2524 (Guilford Co)\Structures\Ramp A\Drawings\Final\U-2524_sd_rpa_cds.dgn

NOTES:

1. FOR COLLECTOR PIPE SUPPORTS, SEE SHEET 3 OF 5.
2. FOR ADDITIONAL NOTES, SEE SHEET 5 OF 5.

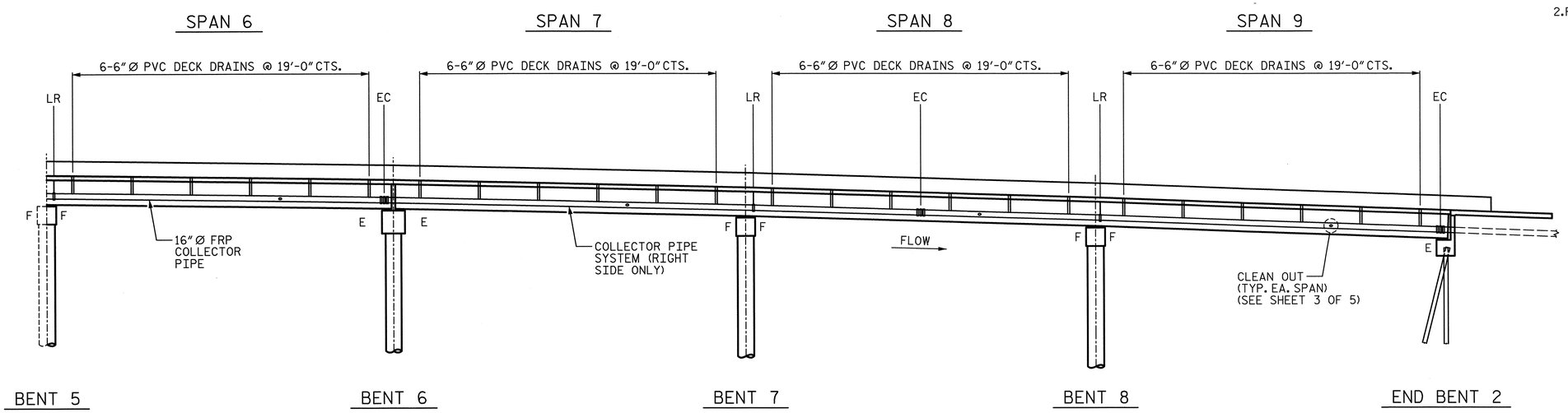

ELEVATION

EC = EXPANSION COUPLER (SEE SHEET 3 OF 5 FOR DETAILS)
LR = LONGITUDINAL RESTRAINT (SEE SHEET 3 OF 5 FOR DETAILS)

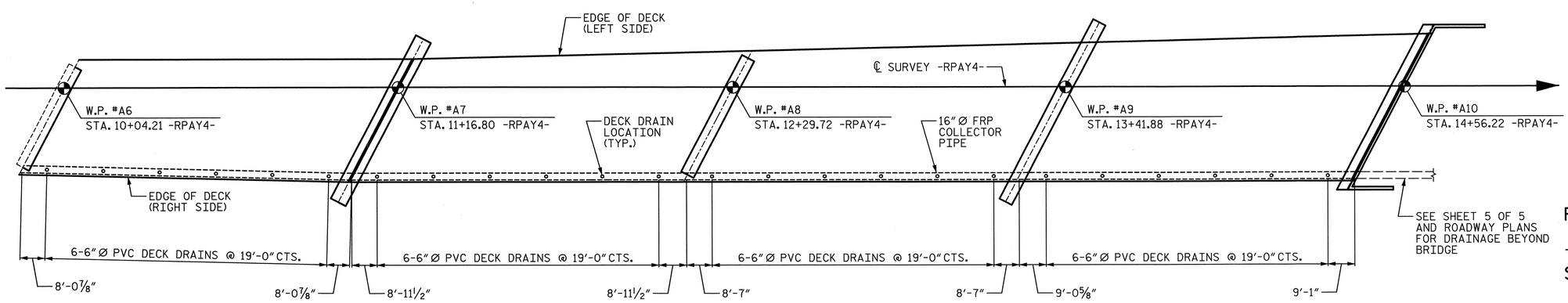

PLAN

(GIRDERS NOT SHOWN FOR CLARITY)
(DIMENSIONS ARE MEASURED @ CENTERLINE OF 6" DOWN DRAINS FROM ℄ BENT TO ℄ BENT OR ℄ JOINT)

PROJECT NO. U-2524C
GUILFORD COUNTY
STATION: 9+53.33 -RPAY4-

SHEET 2 OF 5

STATE OF NORTH CAROLINA
DEPARTMENT OF TRANSPORTATION
RALEIGH
SUPERSTRUCTURE

STRUCTURE DRAINAGE SYSTEM DETAILS

-RAMP A-

PLANS PREPARED BY:
SIMPSON ENGINEERS & ASSOCIATES
5640 Dillard Drive
Suite 200
Cary, NC 27518
(919) 852-0468
(919) 852-0598 (Fax)
www.simpsonengr.com
LICENSURE NO. C-2521

NORTH CAROLINA PROFESSIONAL SEAL 023906 ENGINEER MARK A. AVERETTE
6-5-2013

REVISIONS								SHEET NO.
NO.	BY:	DATE:	NO.	BY:	DATE:			S-700
1			3					TOTAL SHEETS
2			4					836

DRAWN BY: R. SEALEY DATE: 4-13
CHECKED BY: M. AVERETTE DATE: 4-13
DESIGN ENGINEER OF RECORD: M. AVERETTE DATE: 4-13

6/5/2013 3:45:11 PM G:\Projects\2011\U-2524 (Guilford Co)\Structures\Ramp A\Drawings\Final\U-2524_sd_rpa_cds.dgn

NOTES:

1. FOR ADDITIONAL NOTES, SEE SHEET 5 OF 5.
2. FOR ADDITIONAL COLLECTOR PIPE SUPPORT DETAILS, SEE SHEET 4 OF 5.
3. CONTRACTOR SHALL ENSURE PIPE WALL BUILDUP IS SUFFICIENT TO ENGAGE PIPE RESTRAINT CLAMP AT LONGITUDINAL RESTRAINT LOCATIONS.

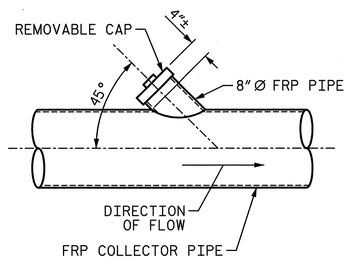

CLEANOUT DETAIL

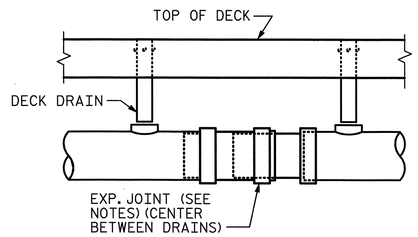

EXPANSION COUPLER

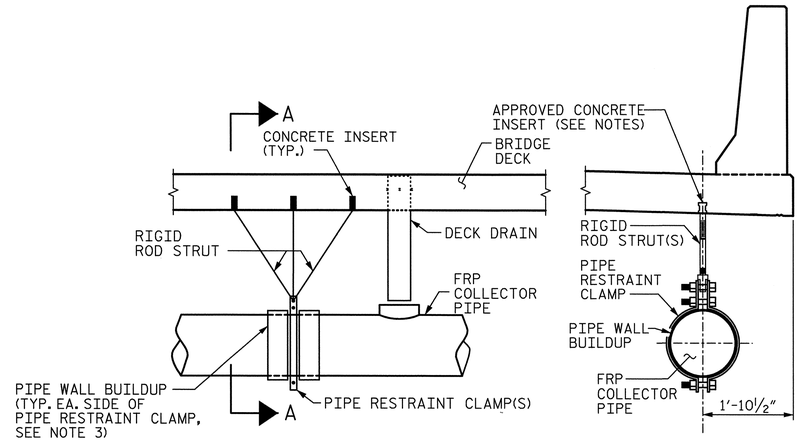

ELEVATION VIEW

SECTION A-A

LONGITUDINAL RESTRAINT DETAIL

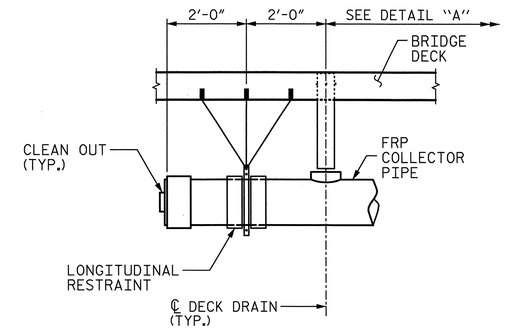

AT START OF SYSTEM

SYSTEM END DETAIL

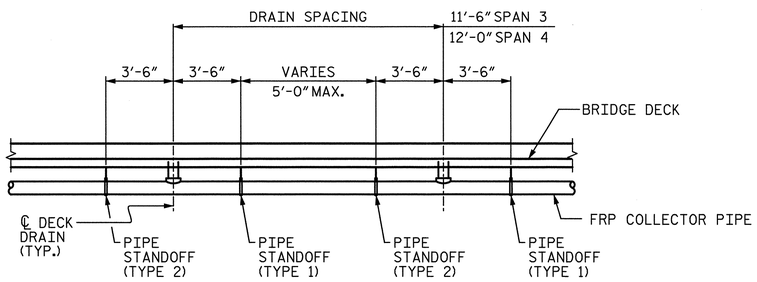

DETAIL "A"

(BETWEEN DECK DRAINS SPANS 3-4)

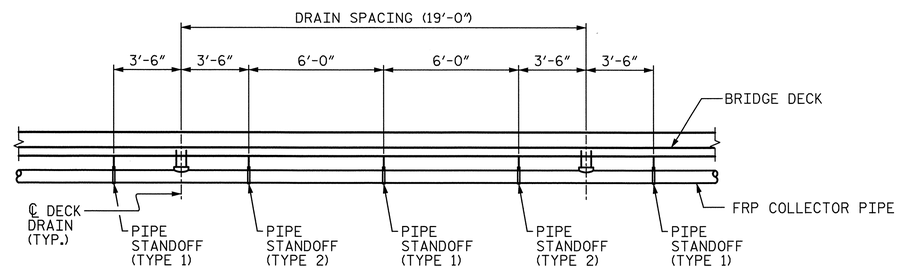

DETAIL "B"

(BETWEEN DECK DRAINS SPANS 5-9)

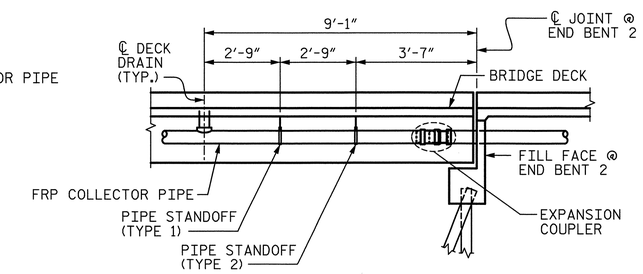

DETAIL "E"

(AT END BENT 2)

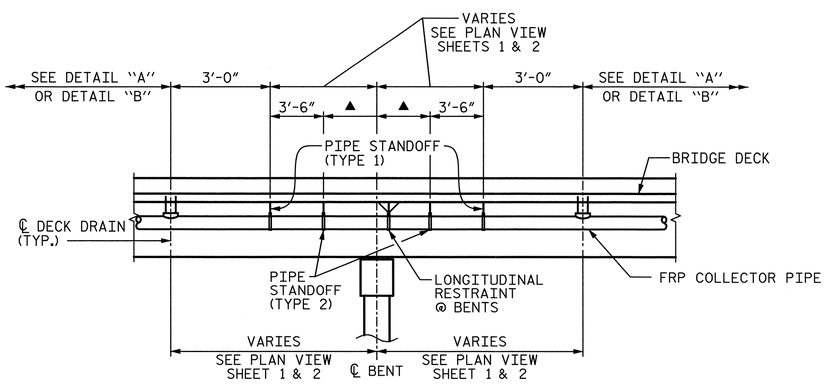

DETAIL "C"

(AT FIXED INTERIOR BENTS 4, 5, 7, AND 8)

▲ IF THIS DIMENSION IS LESS THAN 2'-0" THEN PIPE STANDOFF (TYPE 2) MAY BE ELIMINATED

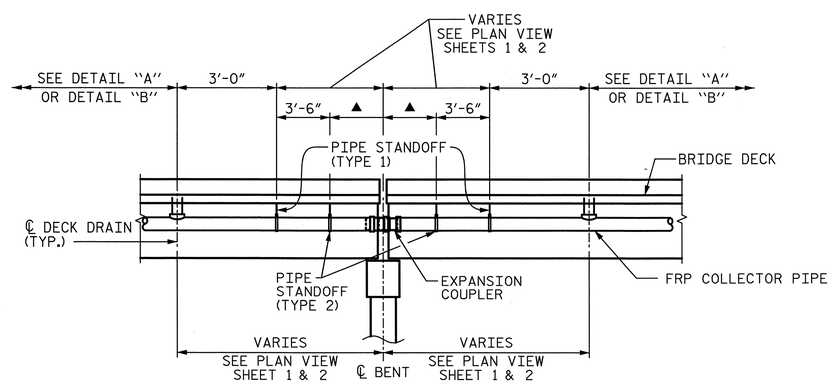

DETAIL "D"

(AT EXPANSION INTERIOR BENTS 3 AND 6)

▲ IF THIS DIMENSION IS LESS THAN 2'-0" THEN PIPE STANDOFF (TYPE 2) MAY BE ELIMINATED

COLLECTOR SUPPORT DETAILS

PROJECT NO. U-2524C

GUILFORD COUNTY

STATION: 9+53.33 -RPAY4-

SHEET 3 OF 5

STATE OF NORTH CAROLINA
DEPARTMENT OF TRANSPORTATION
RALEIGH
SUPERSTRUCTURE

STRUCTURE DRAINAGE SYSTEM DETAILS

-RAMP A-

PLANS PREPARED BY:

SIMPSON ENGINEERS & ASSOCIATES
5640 Dillard Drive
Suite 200
Cary, NC 27518
(919) 852-0468
(919) 852-0598 (Fax)
www.simpsonengr.com
LICENSURE NO. C-2521

NORTH CAROLINA PROFESSIONAL SEAL 023906 ENGINEER MARK A. AVERETTE
6-5-2013

REVISIONS								SHEET NO.
NO.	BY:	DATE:	NO.	BY:	DATE:			S-701
1			3					TOTAL SHEETS
2			4					836

DRAWN BY: R. SEALEY DATE: 4-13
CHECKED BY: M. AVERETTE DATE: 4-13
DESIGN ENGINEER OF RECORD: M. AVERETTE DATE: 4-13

6/5/2013 3:45:16 PM G:\Projects\2011\U-2524 (Guilford Co)\Structures\Ramp A\Drawings\Final\U-2524_sd_rpa_cds.dgn

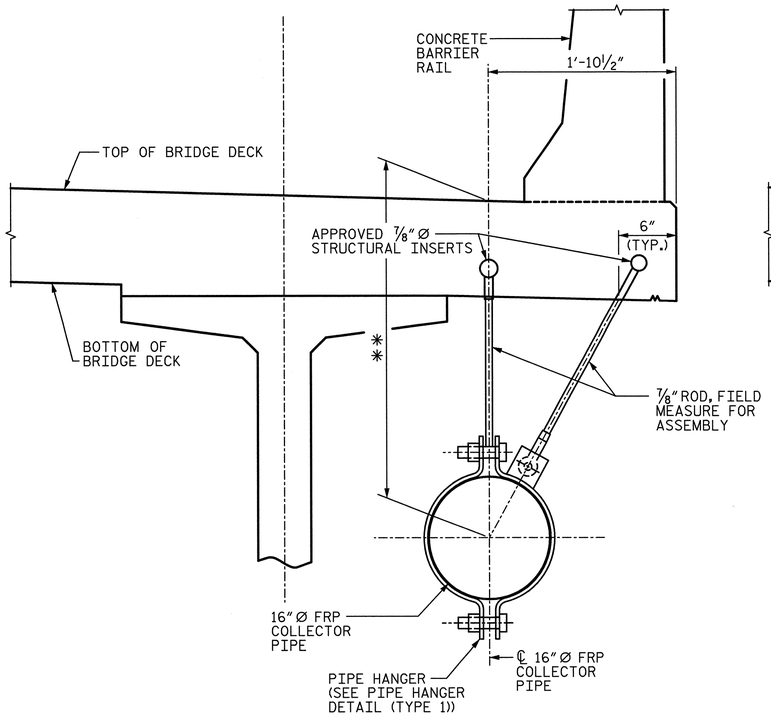

PIPE STANDOFF (TYPE 1)

ALL COMPONENTS SHALL BE GALVANIZED AFTER FABRICATION.

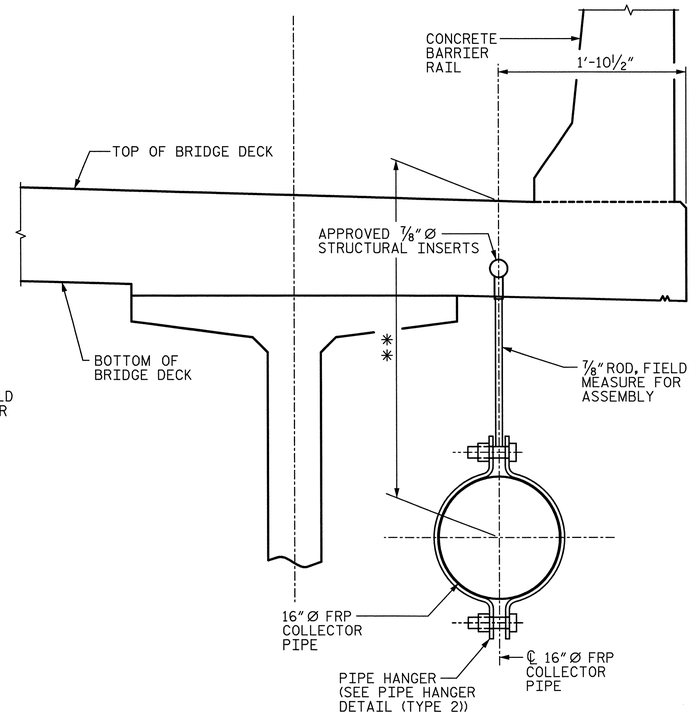

PIPE STANDOFF (TYPE 2)

ALL COMPONENTS SHALL BE GALVANIZED AFTER FABRICATION.

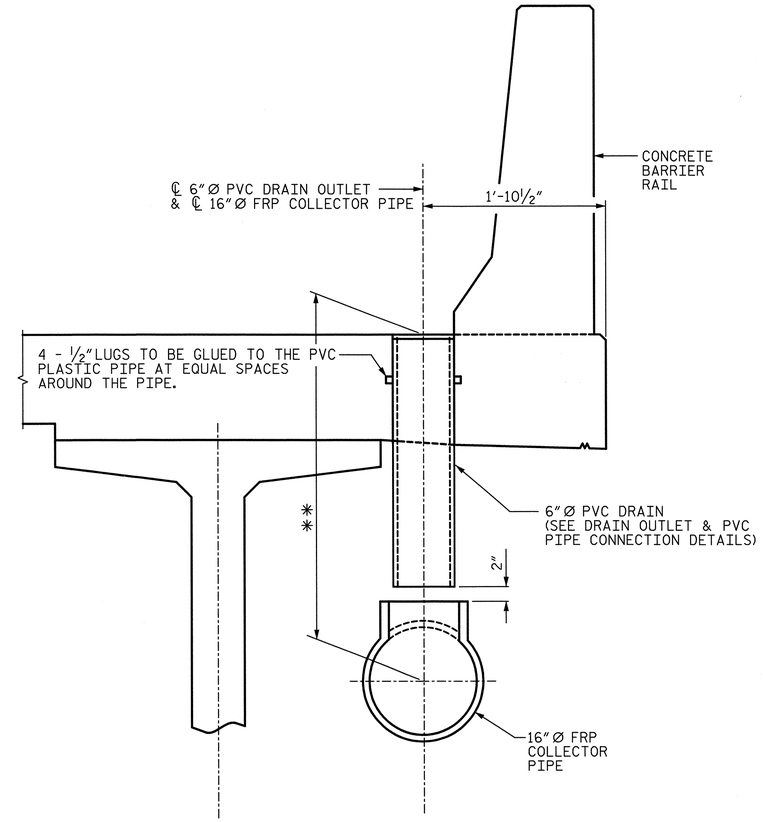

OVERHANG DRAINAGE DETAIL

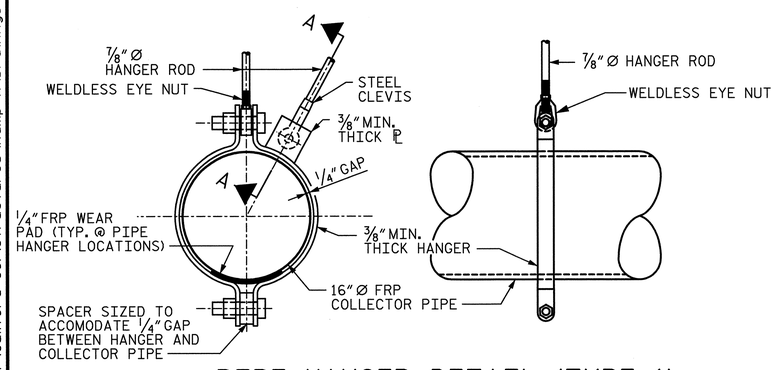

PIPE HANGER DETAIL (TYPE 1)

ALL COMPONENTS SHALL BE GALVANIZED AFTER FABRICATION.

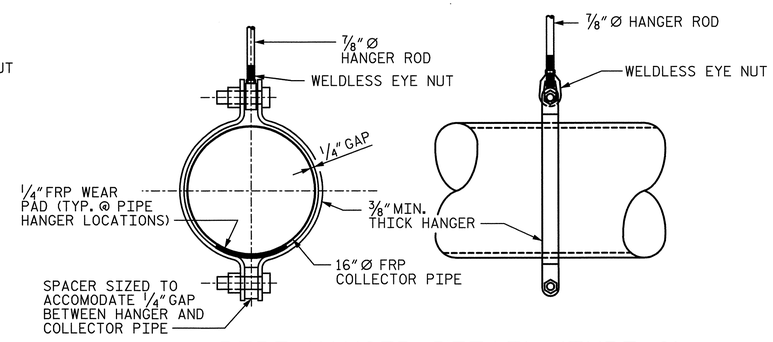

PIPE HANGER DETAIL (TYPE 2)

ALL COMPONENTS SHALL BE GALVANIZED AFTER FABRICATION.

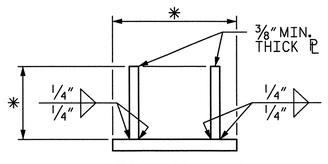

SECTION A-A

(STEEL CLEVIS & ⅞"Ø HANGER ROD NOT SHOWN FOR CLARITY)

* DIMENSIONS TO BE DETERMINED BY MANUFACTURER.

NOTES:

1. FOR ADDITIONAL NOTES, SEE SHEET 5 OF 5.

** DIMENSION VARIES FROM APPROXIMATELY 3'-3" AT STA. 6+70.00 -RPAY4- TO APPROXIMATELY 4'-3" AT STA 8+86.00 -RPAY4- IN ORDER TO MAINTAIN A MINIMUM 0.3% SLOPE ON DRAIN PIPE. MAINTAIN APPROXIMATELY 4'-3" FROM STA. 8+86.00 -RPAY4- THRU THE BACKWALL OF END BENT 2. FABRICATOR/CONTRACTOR SHALL ADJUST DIMENSIONS SUCH THAT PIPE MAINTAINS A MINIMUM SLOPE OF 0.3% TOWARDS THE OUTLET.

PROJECT NO. U-2524C

GUILFORD COUNTY

STATION: 9+53.33 -RPAY4-

SHEET 4 OF 5

STATE OF NORTH CAROLINA
DEPARTMENT OF TRANSPORTATION
RALEIGH
SUPERSTRUCTURE

STRUCTURE DRAINAGE SYSTEM DETAILS

-RAMP A-

PLANS PREPARED BY:
SIMPSON ENGINEERS & ASSOCIATES
5640 Dillard Drive
Suite 200
Cary, NC 27518
(919) 852-0468
(919) 852-0598 (Fax)
www.simpsonengr.com
LICENSURE NO. C-2521

NORTH CAROLINA PROFESSIONAL SEAL 023908 ENGINEER MARK A. AVERETTE
6-5-2013

REVISIONS						SHEET NO.
NO.	BY:	DATE:	NO.	BY:	DATE:	S-702
1			3			TOTAL SHEETS
2			4			836

DRAWN BY:	R. SEALEY	DATE:	4-13
CHECKED BY:	M. AVERETTE	DATE:	4-13
DESIGN ENGINEER OF RECORD:	M. AVERETTE	DATE:	4-13

6/5/2013 3:45:21 PM G:\Projects\2011\U-2524 (Guilford Co)\Structures\Ramp A\Drawings\Final\U-2524_sd_rpa_cds.dgn

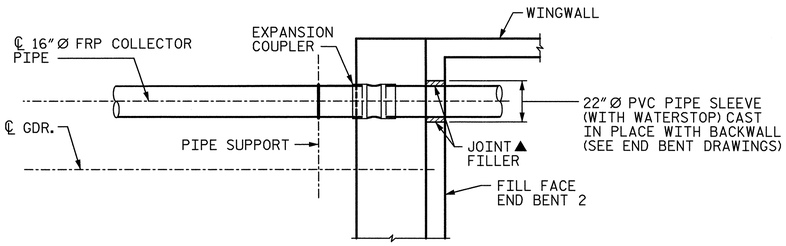

PLAN

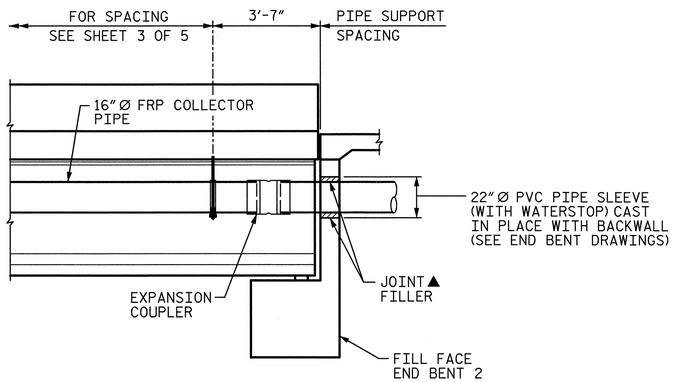

ELEVATION

COLLECTOR PIPE SYSTEM AT END BENT 2

▲ CENTER 20"Ø STEEL PIPE SLEEVE IN BLOCKOUT AND FILL ANNULAR SPACE AROUND PIPE WITH JOINT FILLER IN ACCORDANCE WITH STANDARD SPECIFICATION ARTICLE 1028-1

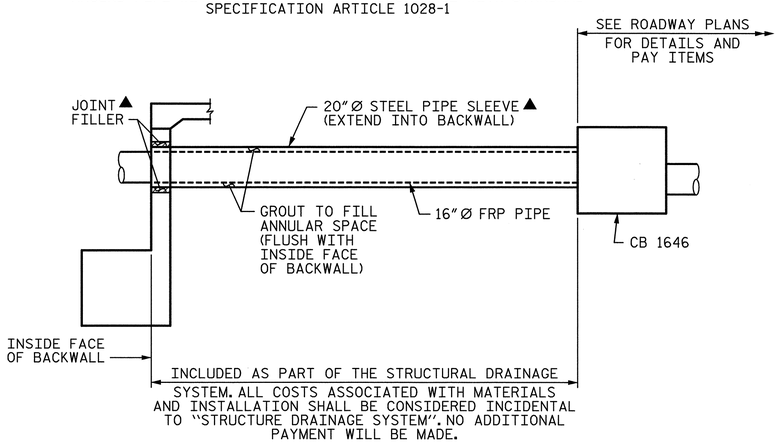

COLLECTOR PIPE SYSTEM BEYOND END BENT 2

ALL COMPONENTS OF COLLECTOR PIPE SYSTEM SHALL ACCOMODATE ANY FLARE/KINK NECESSARY TO REACH CATCH BASIN

STRUCTURE DRAINAGE SYSTEM NOTES:

THE ENTIRE COST FOR THE LABOR AND MATERIALS NECESSARY TO FABRICATE AND INSTALL FRP PIPE, PIPE SUPPORT AND PIPE ANCHOR ASSEMBLIES SHALL BE INCLUDED IN THE LUMP SUM PRICE BID FOR THE "STRUCTURE DRAINAGE SYSTEM." SEE SPECIAL PROVISIONS FOR STRUCTURE DRAINAGE SYSTEM.

ALL COLLECTOR PIPES, ELBOWS, COUPLERS, AND TEES SHALL BE FIBERGLASS REINFORCED PLASTIC PIPE MEETING THE SPECIFICATIONS OF ASTM D2996 AND THE ACCELERATED UV WEATHERING PERFORMANCE REQUIREMENTS OF ASTM D4329-05 PER PROCEDURE ASTM G154.

EACH PIPE SECTION SHALL HAVE A MINIMUM OF TWO HANGERS.

COLLECTOR PIPE SHALL BE SUPPORTED FROM THE CONCRETE DECK SLAB. NO ATTACHMENT TO THE GIRDERS WILL BE PERMITTED.

CONTRACTOR SHALL PROVIDE FRP COUPLINGS CAPABLE OF HANDLING THE ANTICIPATED MOVEMENTS. ADDITIONALLY FRP COUPLINGS SHALL PROVIDE HORIZONTAL ALIGNMENT TOLERANCES SUCH THAT THE 16"Ø FRP COLLECTOR PIPE AND COUPLINGS CAN CLOSELY FOLLOW THE VERTICAL AND HORIZONTAL CURVE OF THE STRUCTURE.

THE CONTRACTOR SHALL BE RESPONSIBLE FOR DETERMINING THE HORIZONTAL AND VERTICAL ALIGNMENT OF THE DRAINAGE SYSTEM USING NECESSARY FITTINGS, TEES, AND WYES TO PROVIDE A CONTINUOUS DRAINAGE SYSTEM.

CONCRETE INSERTS SHALL HAVE A MINIMUM WORKING LOAD TENSION CAPACITY OF 4.5 KIPS.

CONTRACTOR SHALL VERIFY LOCATION OF CONCRETE INSERTS IN REGARD TO ADJACENT INSERTS AND DECK DRAINS. IF SPACING/LOCATION OF INSERTS RESULTS IN REDUCED INSERT CAPACITY, CONTRACTOR SHALL SUBMIT INSERT SYSTEM WITH APPROPRIATE CAPACITY, GIVEN CONSTRAINTS, OR PROVIDED ALTERNATE CONNECTION/SUPPORT DETAILS FOR REVIEW AND APPROVAL OF THE ENGINEER PRIOR TO INSTALLATION.

DECK DRAIN PIPE SHALL BE ASTM D1785, SCHEDULE 40. ALL PVC FITTINGS SHALL BE MINIMUM ASTM D2665, SCHEDULE 40.

EXPANSION JOINT COUPLERS IN THE COLLECTOR PIPE SHALL HAVE A MINIMUM CAPACITY TO ACCOMMODATE 6-INCHES OF TOTAL MOVEMENT (3-INCHES EXPANSION/3-INCHES CONTRACTION).

AN OPTIONAL DETAIL FOR THE LONGITUDINAL RESTRAINTS AND THE LATERAL GUIDE MAY BE SUBMITTED FOR APPROVAL.

COLLECTOR PIPE SUPPORTS SHALL BE LOCATED WITHIN 12-INCHES, ± 4-INCHES, OF A COLLECTOR PIPE JOINT.

DECK DOWN-DRAIN PIPES SHALL BE CENTERED IN SLOTTED OPENING IN COLLECTOR PIPE REGARDLESS OF TEMPERATURE AT TIME OF INSTALLATION.

HANGER RODS SHALL BE ASTM A193, GRADE B7 OR CARBON STEEL ALL-THREAD HANGER RODS.

NUTS SHALL BE ASTM A194, GRADE 2H, HEAVY HEX NUTS.

THE DETAILS OF ALL PIPING, HARDWARE, OR OTHER MATERIAL SHALL BE PROVIDED BY THE CONTRACTOR AND IS SUBJECT TO THE APPROVAL OF THE ENGINEER.

AT LOCATIONS OF "KINKS" IN THE DRAINAGE SYSTEM AT BENT LOCATIONS DUE TO FLARING OF DECK, FIXED AND/OR EXPANSION COUPLERS SHALL BE DESIGNED FOR THE RESULTING HORIZONTAL ANGLE.

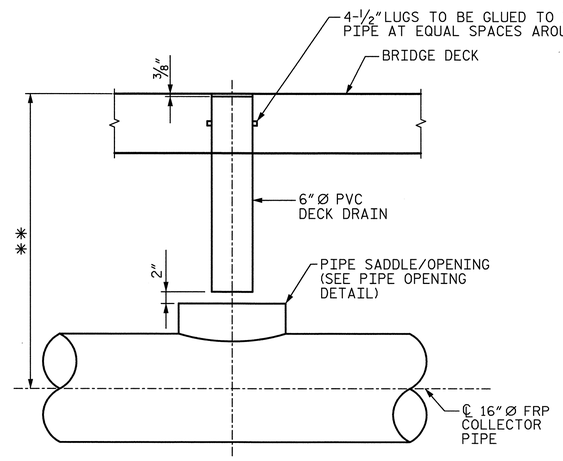

DRAIN OUTLET & PIPE CONNECTION

** DIMENSION VARIES FROM APPROXIMATELY 3'-3" AT STA. 6+70.00 -RPAY4- TO APPROXIMATELY 4'-3" AT STA 8+86.00 -RPAY4- IN ORDER TO MAINTAIN A MINIMUM 0.3% SLOPE ON DRAIN PIPE. MAINTAIN APPROXIMATELY 4'-3" FROM STA. 8+86.00 -RPAY4- THRU THE BACKWALL OF END BENT 2. FABRICATOR/CONTRACTOR SHALL ADJUST DIMENSIONS SUCH THAT PIPE MAINTAINS A MINIMUM SLOPE OF 0.3% TOWARDS THE OUTLET.

STRUCTURE DRAINAGE SYSTEM NOTES (CONTINUED):

WORKING DRAWINGS FOR THE DRAINAGE SYSTEM AND LAYOUT PLANS INCLUDING, BUT NOT LIMITED TO, PIPE SUPPORT BRACKETS, PIPE ALIGNMENT, PIPE LENGTHS, AND ALL NECESSARY FITTINGS, ELBOWS, WYES, ADAPTERS, GUIDES, RESTRAINTS, WEAR PADS, COUPLERS AND JOINTS SHALL BE DESIGNED AND SEALED BY A PROFESSIONAL ENGINEER LICENSED IN NORTH CAROLINA AND SUBMITTED FOR APPROVAL PRIOR TO ORDERING MATERIALS.

PIPE MANUFACTURER SHALL ENSURE THE PIPE AND THE PIPE SUPPORT BEARING AREA IS DESIGNED IN ACCORDANCE WITH THE HANGER SPACING PROVIDED IN THESE PLANS.

PIPE DESIGN MUST ALLOW VERTICAL FLEXURE FROM THE SUPERSTRUCTURE.

THE COLLECTOR PIPE SHALL CLOSELY FOLLOW THE LONGITUDINAL GRADE OF THE STRUCTURE WHILE MAINTAINING A MINIMUM OF 0.3% SLOPE AT ALL TIMES.

COUPLERS SHALL BE DESIGNED TO ACCOMMODATE A TURN AT EACH BENT IN ORDER TO FOLLOW THE HORIZONTAL AND VERTICAL CURVATURE OF THE BRIDGE OVERHANG.

THE PIPE MANUFACTURER SHALL ENSURE THE FRICTIONAL FORCE REQUIRED TO ACTIVATE THE EXPANSION COUPLERS DOES NOT OVERSTRESS THE COUPLER WALL BUILD-UP, DRAINAGE SYSTEM BRACKETS SUPPORTS OR LATERAL RESTRAINTS.

WASHERS SHALL BE ASTM F436 OR APPROVED EQUIVALENT.

BOLTS, NUTS, AND WASHERS SHALL BE GALVANIZED IN ACCORDANCE WITH THE STANDARD SPECIFICATIONS.

BOLT THREADS SHALL BE BURRED TO PREVENT LOOSENING.

PVC PIPE SHALL BE PAINTED TO MATCH THE FINAL SURFACE FINISH OF THE STRUCTURE WITH TWO COATS OF AN ACRYLIC OR LATEX PAINT THAT IS CHEMICALLY COMPATIBLE WITH PVC PRODUCTS AND MEETS THE REQUIREMENTS OF ARTICLE 1080-12 OF THE STANDARD SPECIFICATIONS. EACH COAT SHALL BE 2 DRY MILS THICK. DECK DRAINS SHALL BE ROUGHENED PRIOR TO PAINTING.

ALL METALLIC COMPONENTS IN THE DRAINAGE SYSTEM, EXCEPT STAINLESS STEEL AND MALLEABLE IRON PARTS, ARE REQUIRED TO BE HOT-DIPPED GALVANIZED PER NCDOT STANDARD SPECIFICATIONS. ELECTRO-PLATE COATING ON STEEL RODS, STEEL YOKE TYPE PIPE ROLLS, BRACKETS, OTHER STEEL HARDWARE IS CONSIDERED BY NCDOT AS TOO THIN FOR OUTDOOR APPLICATIONS.

ALL FRP PIPE AND PVC PIPE SHALL BE INSTALLED PER MANUFACTURER'S RECOMMENDATIONS.

ALL STRUCTURAL STEEL SHALL BE ASTM A36 OR APPROVED EQUAL UNLESS NOTED OTHERWISE.

THE GALVANIZED SURFACE SHALL BE CLEANED TO (SSPC SP-1) PRIOR TO COATING.

ALL FABRICATION SHALL CONFORM TO THE APPLICABLE SECTION OF THE NORTH CAROLINA DEPARTMENT OF TRANSPORTATION STANDARD SPECIFICATIONS FOR ROADS AND STRUCTURES.

ALL FRP PIPE SHALL BE PIGMENTED TO MATCH THE FINAL SURFACE FINISH OF THE ADJACENT STRUCTURE.

ALL FRP PIPE SIZES ARE SHOWN AS INSIDE DIAMETER SIZES.

FRP PIPE WITHIN EMBANKMENT AND PROJECTING THROUGH END BENT BACKWALL SHALL BE DESIGNED FOR THE APPLICATION BY THE PIPE ENGINEER.

FRP = FIBERGLASS REINFORCED PLASTIC

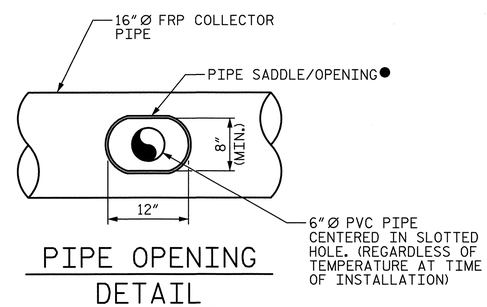

PIPE OPENING DETAIL

● FABRICATOR SHALL DETERMINE PIPE SADDLE/REINFORCEMENT FOR OPENING SIZE INDICATED. FABRICATOR SHALL SUBMIT SHOP DRAWINGS OF PIPE SADDLE/OPENING FOR REVIEW PRIOR TO BEGINNING FABRICATION.

PROJECT NO. U-2524C
GUILFORD COUNTY
STATION: 9+53.33 -RPAY4-

SHEET 5 OF 5

STATE OF NORTH CAROLINA
DEPARTMENT OF TRANSPORTATION
RALEIGH
SUPERSTRUCTURE

STRUCTURE DRAINAGE SYSTEM DETAILS

-RAMP A-

PLANS PREPARED BY:
SIMPSON ENGINEERS & ASSOCIATES
5640 Dillard Drive
Suite 200
Cary, NC 27518
(919) 852-0468
(919) 852-0598 (Fax)
www.simpsonengr.com
LICENSURE NO. C-2521

NORTH CAROLINA PROFESSIONAL SEAL 023906 ENGINEER MARK A. AVERETTE
6-5-2013

REVISIONS						SHEET NO.
NO.	BY:	DATE:	NO.	BY:	DATE:	S-703
1			3			TOTAL SHEETS
2			4			836

DRAWN BY: R. SEALEY DATE: 4-13
CHECKED BY: M. AVERETTE DATE: 4-13
DESIGN ENGINEER OF RECORD: M. AVERETTE DATE: 4-13

6/5/2013 3:45:26 PM G:\Projects\2011\U-2524 (Guilford Co)\Structures\Ramp A\Drawings\Final\U-2524_sd_rpa_cds.dgn

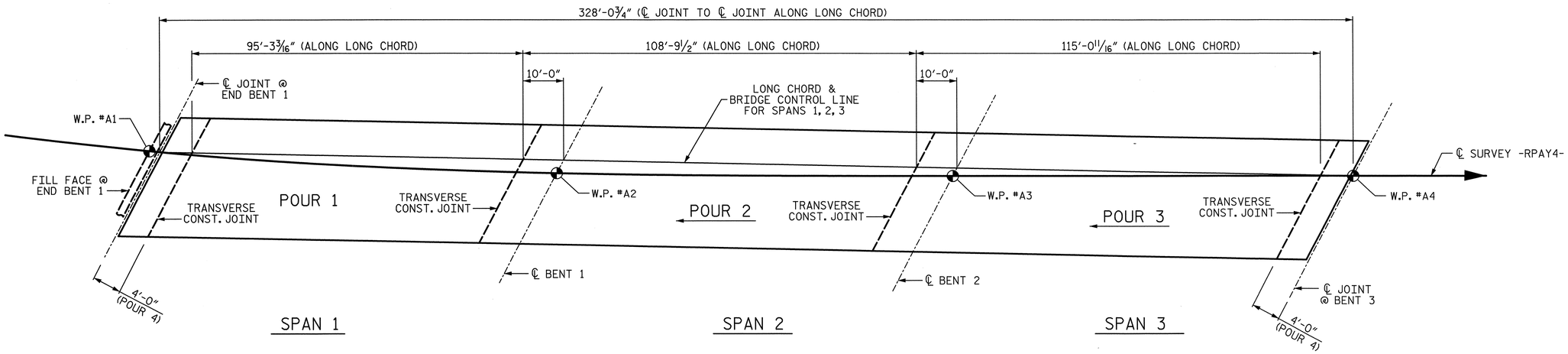

POUR SEQUENCE - 3 SPAN CONTINUOUS UNIT 1

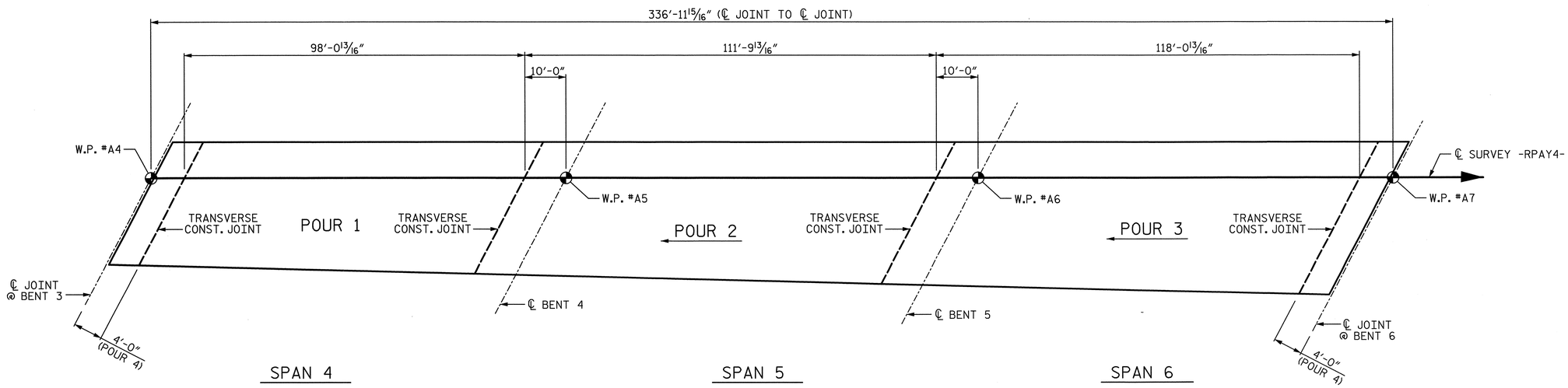

POUR SEQUENCE - 3 SPAN CONTINUOUS UNIT 2

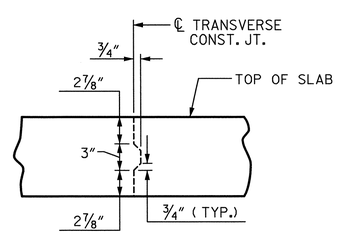

TRANSVERSE CONSTRUCTION JOINT DETAIL

NOTE: REINFORCING STEEL IN SLAB NOT SHOWN.
LONGITUDINAL REINFORCING STEEL SHALL BE CONTINUOUS THRU JOINT.

PROJECT NO. U-2524C
GUILFORD COUNTY
STATION: 9+53.33 -RPAY4-

SHEET 1 OF 2

STATE OF NORTH CAROLINA
DEPARTMENT OF TRANSPORTATION
RALEIGH
SUPERSTRUCTURE

POUR SEQUENCE DETAILS

-RAMP A-

PLANS PREPARED BY:
SIMPSON ENGINEERS & ASSOCIATES
5640 Dillard Drive
Suite 200
Cary, NC 27518
(919) 852-0468
(919) 852-0598 (Fax)
www.simpsonengr.com
LICENSURE NO. C-2521

NORTH CAROLINA PROFESSIONAL SEAL 023906 ENGINEER MARK A. AVERETTE
6-5-2013

REVISIONS								SHEET NO.
NO.	BY:	DATE:	NO.	BY:	DATE:			S-704
1			3					TOTAL SHEETS
2			4					836

DRAWN BY: R. SEALEY DATE: 4-13
CHECKED BY: M. AVERETTE DATE: 4-13
DESIGN ENGINEER OF RECORD: M. AVERETTE DATE: 4-13

6/5/2013 3:45:31 PM G:\Projects\2011\U-2524 (Guilford Co)\Structures\Ramp A\Drawings\Final\U-2524_sd_rpa_pseq.dgn

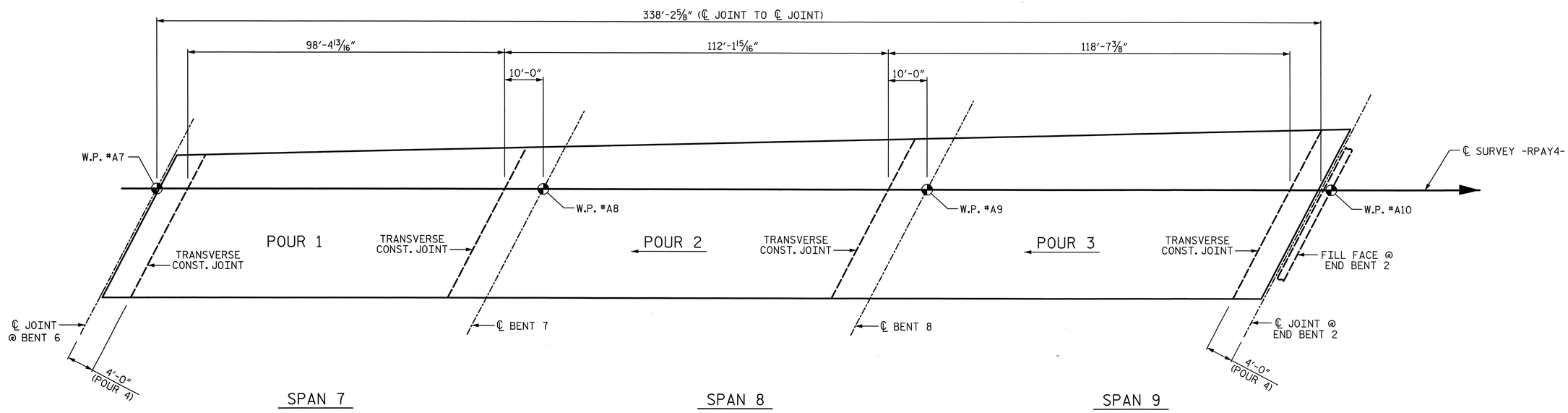

POUR SEQUENCE - 3 SPAN CONTINUOUS UNIT 3

PROJECT NO. U-2524C

GUILFORD COUNTY

STATION: 9+53.33 -RPAY4-

SHEET 2 OF 2

STATE OF NORTH CAROLINA
DEPARTMENT OF TRANSPORTATION
RALEIGH
SUPERSTRUCTURE

POUR SEQUENCE DETAILS

-RAMP A-

PLANS PREPARED BY:

SIMPSON ENGINEERS & ASSOCIATES
5640 Dillard Drive
Suite 200
Cary, NC 27518
(919) 852-0468
(919) 852-0598 (Fax)
www.simpsonengr.com
LICENSURE NO. C-2521

NORTH CAROLINA PROFESSIONAL SEAL 023906 ENGINEER MARK A. AVERETTE
6-5-2013

REVISIONS						SHEET NO.
NO.	BY:	DATE:	NO.	BY:	DATE:	S-705
1			3			TOTAL SHEETS
2			4			836

DRAWN BY: R. SEALEY DATE: 4-13
CHECKED BY: M. AVERETTE DATE: 4-13
DESIGN ENGINEER OF RECORD: M. AVERETTE DATE: 4-13

6/5/2013 3:45:36 PM G:\Projects\2011\U-2524 (Guilford Co)\Structures\Ramp A\Drawings\Final\U-2524_sd_rpa_pseq.dgn

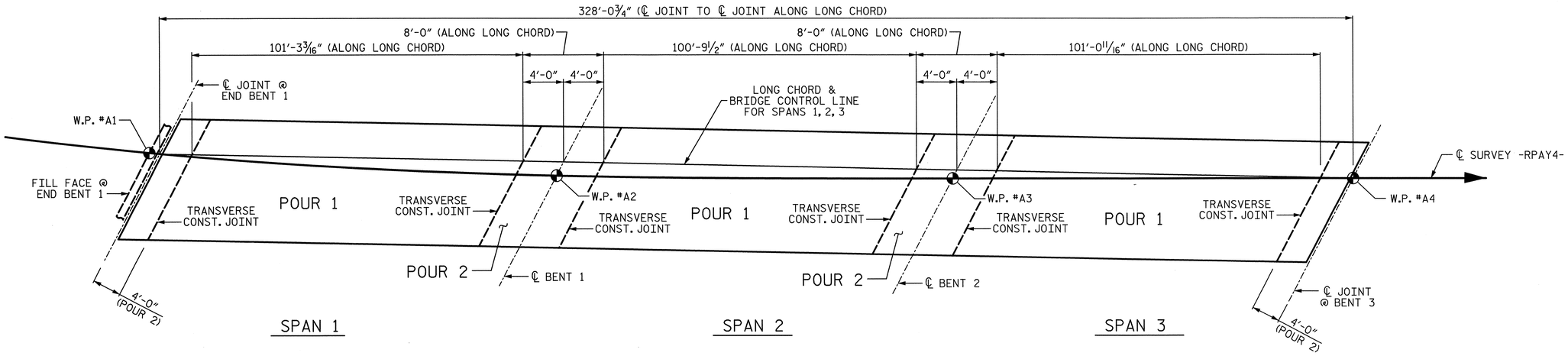

OPTIONAL POUR SEQUENCE - 3 SPAN CONTINUOUS UNIT 1

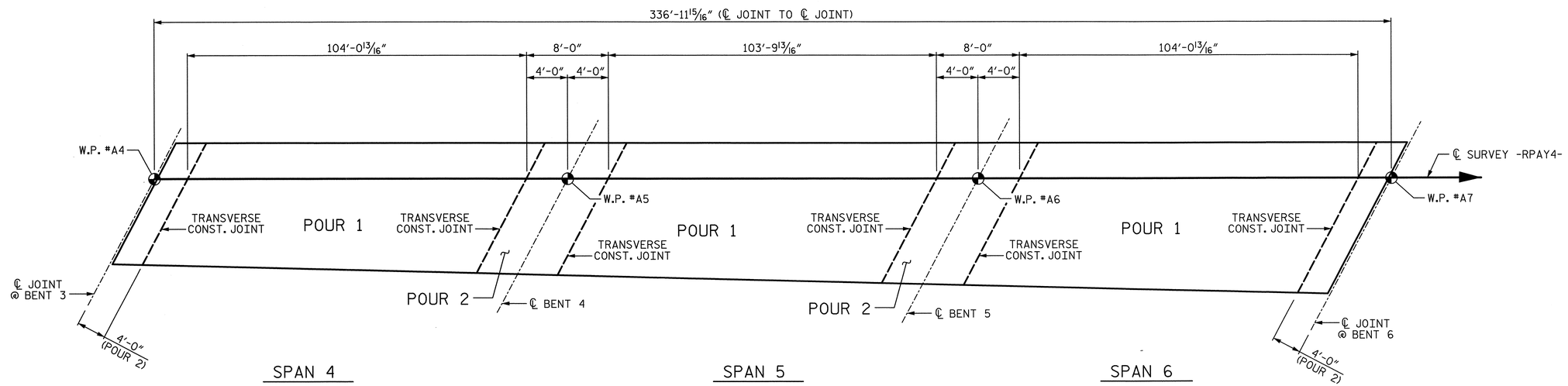

OPTIONAL POUR SEQUENCE - 3 SPAN CONTINUOUS UNIT 2

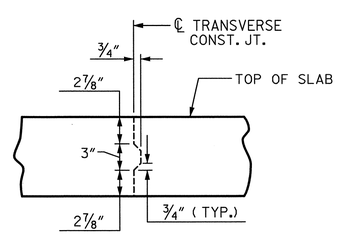

TRANSVERSE CONSTRUCTION JOINT DETAIL

NOTE: REINFORCING STEEL IN SLAB NOT SHOWN.
LONGITUDINAL REINFORCING STEEL SHALL BE CONTINUOUS THRU JOINT.

PROJECT NO. U-2524C
GUILFORD COUNTY
STATION: 9+53.33 -RPAY4-

SHEET 1 OF 2

STATE OF NORTH CAROLINA
DEPARTMENT OF TRANSPORTATION
RALEIGH
SUPERSTRUCTURE
OPTIONAL POUR SEQUENCE DETAILS
-RAMP A-

PLANS PREPARED BY:
SIMPSON ENGINEERS & ASSOCIATES
5640 Dillard Drive
Suite 200
Cary, NC 27518
(919) 852-0468
(919) 852-0598 (Fax)
www.simpsonengr.com
LICENSURE NO. C-2521

NORTH CAROLINA PROFESSIONAL SEAL 023906 ENGINEER MARK A. AVERETTE
6-5-2013

REVISIONS						SHEET NO.
NO.	BY:	DATE:	NO.	BY:	DATE:	S-706
1			3			TOTAL SHEETS
2			4			836

DRAWN BY: R. SEALEY DATE: 4-13
CHECKED BY: M. AVERETTE DATE: 4-13
DESIGN ENGINEER OF RECORD: M. AVERETTE DATE: 4-13

6/5/2013 3:45:41 PM G:\Projects\2011\U-2524 (Guilford Co)\Structures\Ramp A\Drawings\Final\U-2524_sd_rpa_pseq.dgn

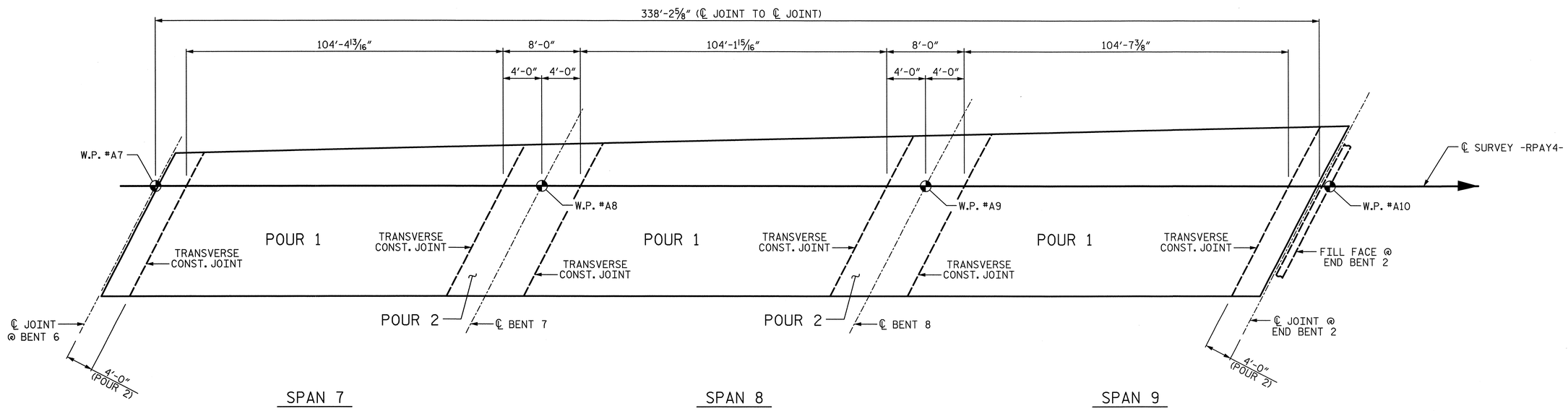

OPTIONAL POUR SEQUENCE - 3 SPAN CONTINUOUS UNIT 3

PROJECT NO. U-2524C

GUILFORD COUNTY

STATION: 9+53.33 -RPAY4-

SHEET 2 OF 2

STATE OF NORTH CAROLINA
DEPARTMENT OF TRANSPORTATION
RALEIGH

SUPERSTRUCTURE

OPTIONAL POUR SEQUENCE DETAILS

-RAMP A-

PLANS PREPARED BY:
SIMPSON ENGINEERS & ASSOCIATES
5640 Dillard Drive
Suite 200
Cary, NC 27518
(919) 852-0468
(919) 852-0598 (Fax)
www.simpsonengr.com
LICENSURE NO. C-2521

NORTH CAROLINA PROFESSIONAL SEAL 023906 ENGINEER MARK A. AVERETTE
6-5-2013

REVISIONS						SHEET NO.
NO.	BY:	DATE:	NO.	BY:	DATE:	S-707
1			3			TOTAL SHEETS
2			4			836

DRAWN BY: R. SEALEY DATE: 4-13
CHECKED BY: M. AVERETTE DATE: 4-13
DESIGN ENGINEER OF RECORD: M. AVERETTE DATE: 4-13

6/5/2013 3:45:46 PM G:\Projects\2011\U-2524 (Guilford Co)\Structures\Ramp A\Drawings\Final\U-2524_sd_rpa_pseq.dgn

NOTES:

FOR DIAPHRAGM DETAILS, SEE "INTERMEDIATE STEEL DIAPHRAGMS" SHEET.

FOR ELASTOMERIC BEARINGS AND STEEL SOLE PLATE DETAILS, SEE "ELASTOMERIC BEARING DETAILS" SHEET.

SEE "72" PRESTRESSED CONCRETE MODIFIED BULB TEE CONTINUOUS FOR LIVE LOAD (DETAILS)", SHEET 4 OF 4 FOR LOCATION OF INTERMEDIATE DIAPHRAGMS.

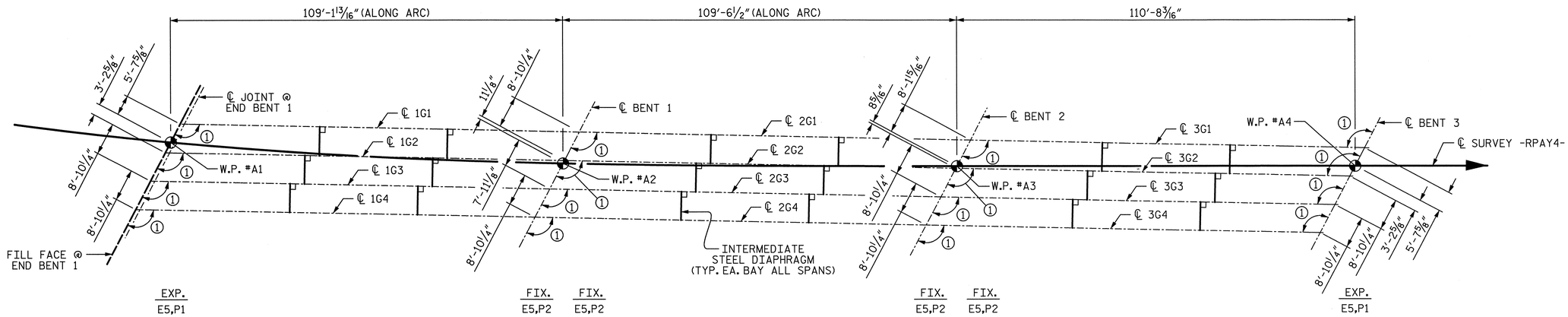

PLAN - 3 SPAN CONTINUOUS UNIT 1

(ALL GIRDERS ARE PARALLEL)

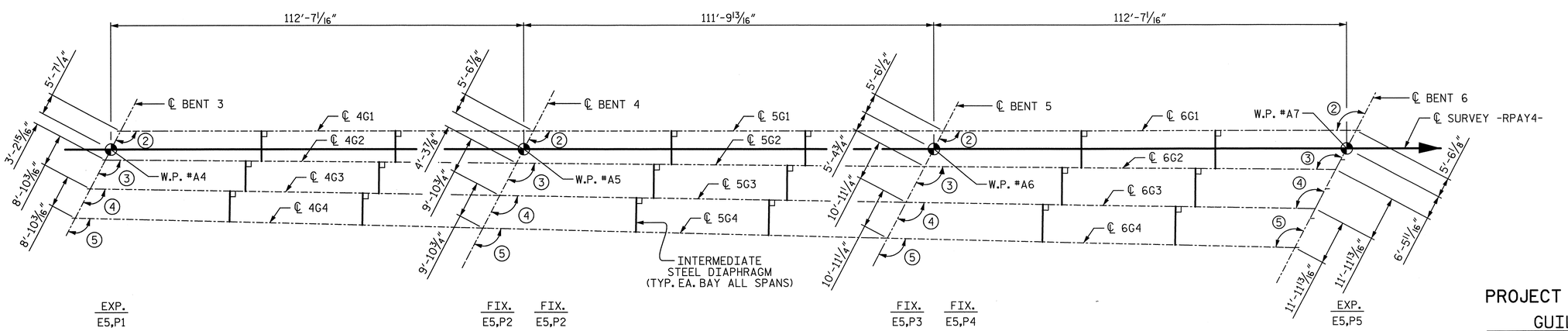

PLAN - 3 SPAN CONTINUOUS UNIT 2

ANGLES

1. 116°-37'-57"
2. 117°-47'-07"
3. 117°-18'-42"
4. 116°-50'-02"
5. 116°-21'-07"

PROJECT NO. U-2524C

GUILFORD COUNTY

STATION: 9+53.33 -RPAY4-

SHEET 1 OF 2

STATE OF NORTH CAROLINA
DEPARTMENT OF TRANSPORTATION
RALEIGH

SUPERSTRUCTURE

GIRDER LAYOUT

-RAMP A-

REVISIONS						SHEET NO.
NO.	BY:	DATE:	NO.	BY:	DATE:	S-708
1			3			TOTAL SHEETS
2			4			836

PLANS PREPARED BY:

SIMPSON ENGINEERS & ASSOCIATES
5640 Dillard Drive
Suite 200
Cary, NC 27518
(919) 852-0468
(919) 852-0598 (Fax)
www.simpsonengr.com
LICENSURE NO. C-2521

NORTH CAROLINA PROFESSIONAL SEAL 023906 ENGINEER MARK A. AVERETTE
6-5-2013

DRAWN BY:	R. SEALEY	DATE:	4-13
CHECKED BY:	M. AVERETTE	DATE:	4-13
DESIGN ENGINEER OF RECORD:	M. AVERETTE	DATE:	4-13

6/5/2013 3:45:51 PM G:\Projects\2011\U-2524 (Guilford Co)\Structures\Ramp A\Drawings\Final\U-2524_sd_rpa_pcg.dgn

NOTES:

FOR DIAPHRAGM DETAILS, SEE "INTERMEDIATE STEEL DIAPHRAGMS" SHEET.

FOR ELASTOMERIC BEARINGS AND STEEL SOLE PLATE DETAILS, SEE "ELASTOMERIC BEARING DETAILS" SHEET.

SEE "72" PRESTRESSED CONCRETE MODIFIED BULB TEE CONTINUOUS FOR LIVE LOAD (DETAILS)", SHEET 4 OF 4 FOR LOCATION OF INTERMEDIATE DIAPHRAGMS.

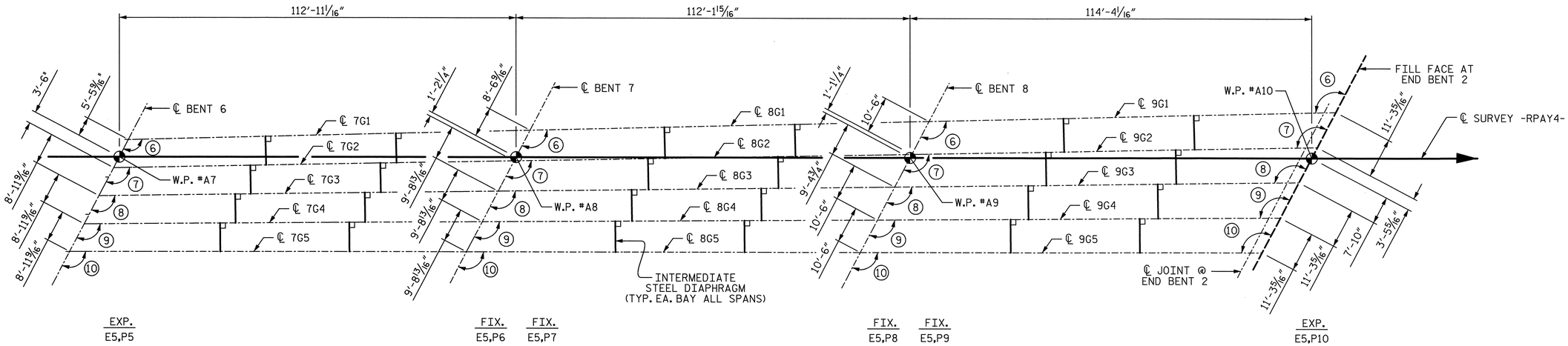

PLAN - 3 SPAN CONTINUOUS UNIT 3

ANGLES

⑥ 119°-09'-51"
⑦ 118°-49'-34"
⑧ 118°-29'-10"
⑨ 118°-08'-38"
⑩ 117°-47'-57"

PROJECT NO. U-2524C

GUILFORD COUNTY

STATION: 9+53.33 -RPAY4-

SHEET 2 OF 2

STATE OF NORTH CAROLINA
DEPARTMENT OF TRANSPORTATION
RALEIGH

SUPERSTRUCTURE

GIRDER LAYOUT

-RAMP A-

PLANS PREPARED BY:
SIMPSON ENGINEERS & ASSOCIATES
5640 Dillard Drive
Suite 200
Cary, NC 27518
(919) 852-0468
(919) 852-0598 (Fax)
www.simpsonengr.com
LICENSURE NO. C-2521

NORTH CAROLINA PROFESSIONAL SEAL 023908 ENGINEER MARK A. AVERETTE
6-5-2013

REVISIONS						SHEET NO.
NO.	BY:	DATE:	NO.	BY:	DATE:	S-709
1			3			TOTAL SHEETS
2			4			836

DRAWN BY: R. SEALEY DATE: 4-13
CHECKED BY: M. AVERETTE DATE: 4-13
DESIGN ENGINEER OF RECORD: M. AVERETTE DATE: 4-13

6/5/2013 3:45:56 PM G:\Projects\2011\U-2524 (Guilford Co)\Structures\Ramp A\Drawings\Final\U-2524_sd_rpa_pog.dgn

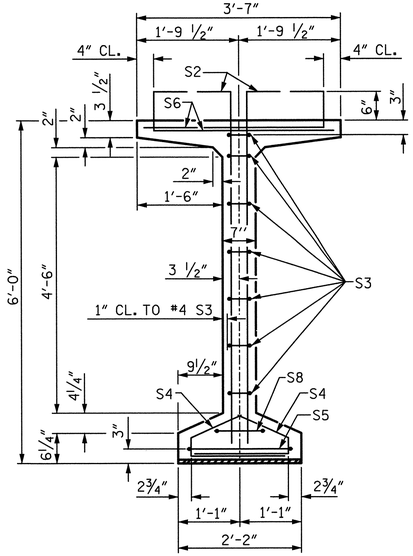

SECTION A-A

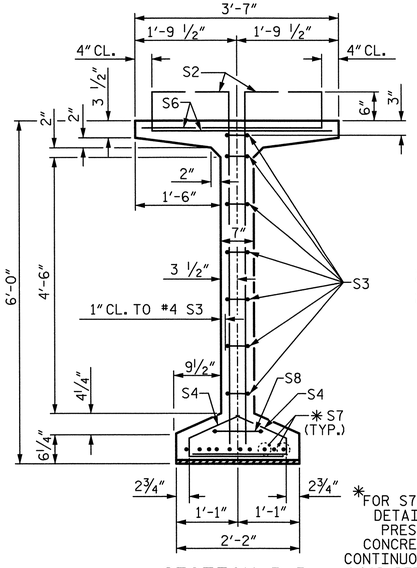

SECTION B-B

* FOR S7 BARS. SEE DETAIL "C" OF PRESTRESSED CONCRETE GIRDER CONTINUOUS FOR LIVE LOAD DETAILS SHEET

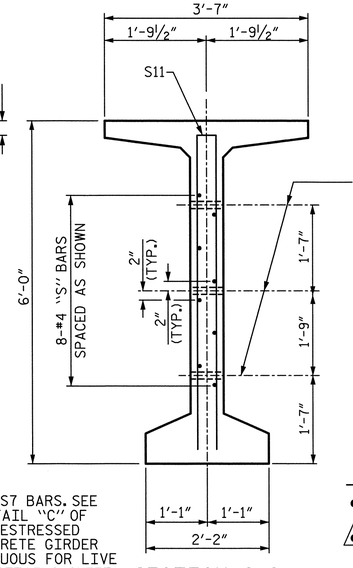

SECTION C-C

(S1, S6 AND S9 BARS NOT SHOWN)

DEBONDING LEGEND

- ● FULLY BONDED STRANDS
- ◬ STRANDS DEBONDED FOR 6'-0" FROM END OF GIRDER

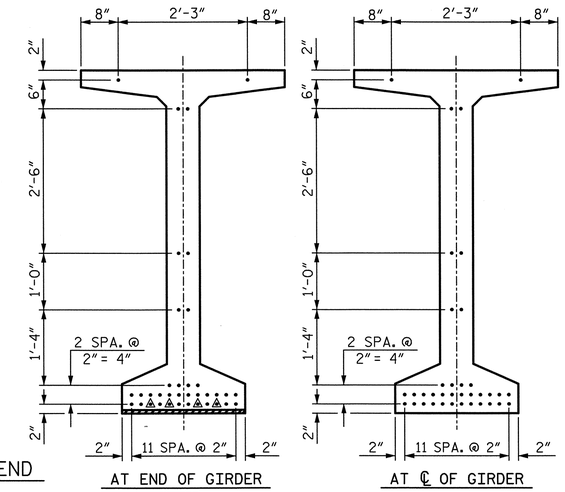

0.6" Ø LOW RELAXATION STRAND LAYOUT

0.6" Ø L. R. GRADE 270 STRANDS		
AREA (SQUARE INCHES)	ULTIMATE STRENGTH (LBS. PER STRAND)	APPLIED PRESTRESS (LBS. PER STRAND)
0.217	58,600	43,950

REINFORCING STEEL FOR ONE GDR

	BAR	NUMBER	SIZE	TYPE	LENGTH	WEIGHT
EXTERIOR GDR.	S1	150	5	1	6'-10"	1069
INTERIOR GDR.	S1	150	5	1	6'-10"	1069
	S2	24	6	1	6'-10"	246
	S3	14	4	2	8'-5"	79
	S4	84	4	3	3'-0"	168
SPAN 1 & 3	S5	1	5	2	9'-10"	10
EXTERIOR GDR.	S6	174	5	4	4'-4"	786
INTERIOR GDR.	S6	174	5	4	4'-4"	786
SPAN 1 & 3	* S7	10	5	STR	3'-8"	38
SPAN 2	* S7	20	5	STR	3'-8"	76
	S8	2	5	2	9'-0"	19
	S9	44	5	STR	3'-3"	149
SPAN 1 & 3	S10	1	3	STR	1'-10"	1
SPAN 2	S10	2	3	STR	1'-10"	1
EXTERIOR GDR.	S11	8	5	2	11'-8"	97
INTERIOR GDR.	S11	16	5	2	11'-8"	195
EXTERIOR GDR.	S12	16	4	STR	8'-0"	86
INTERIOR GDR.	S13	16	4	STR	13'-8"	146

* NOTE: S7 BARS SHALL BE BENT BEFORE SHIPMENT. HEAT BENDING SHALL NOT BE ALLOWED.

BAR TYPES

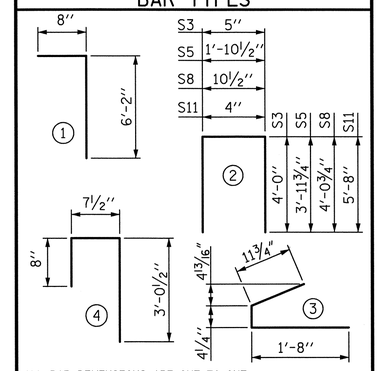

ALL BAR DIMENSIONS ARE OUT-TO-OUT

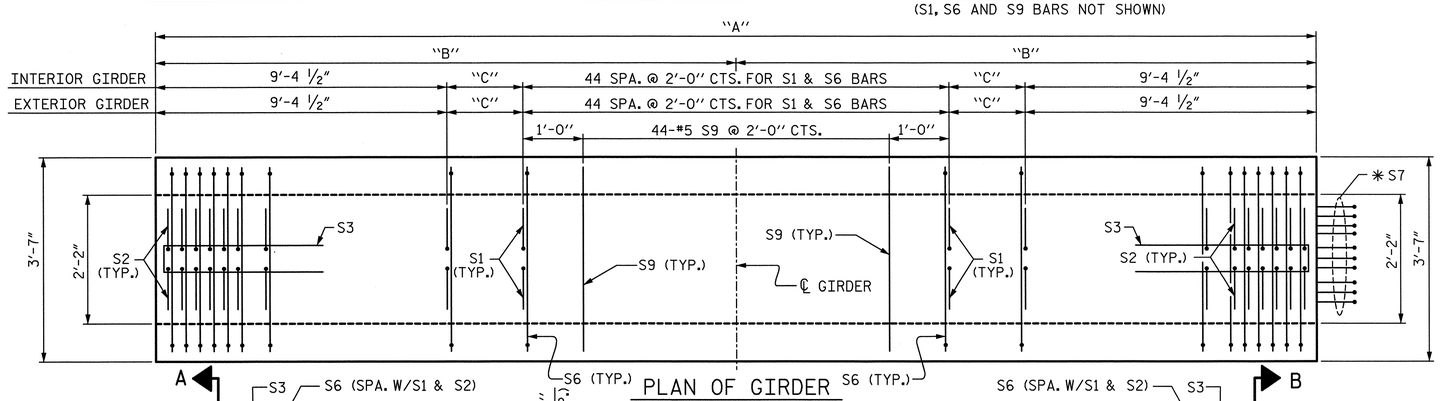

PLAN OF GIRDER

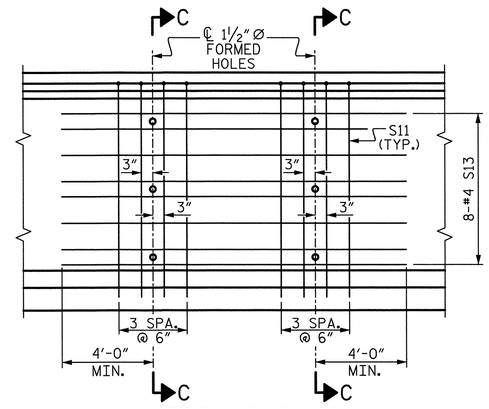

PARTIAL ELEVATION

SHOWING INTERMEDIATE STEEL DIAPHRAGM REINFORCING STEEL FOR GIRDER INTERIOR GIRDERS

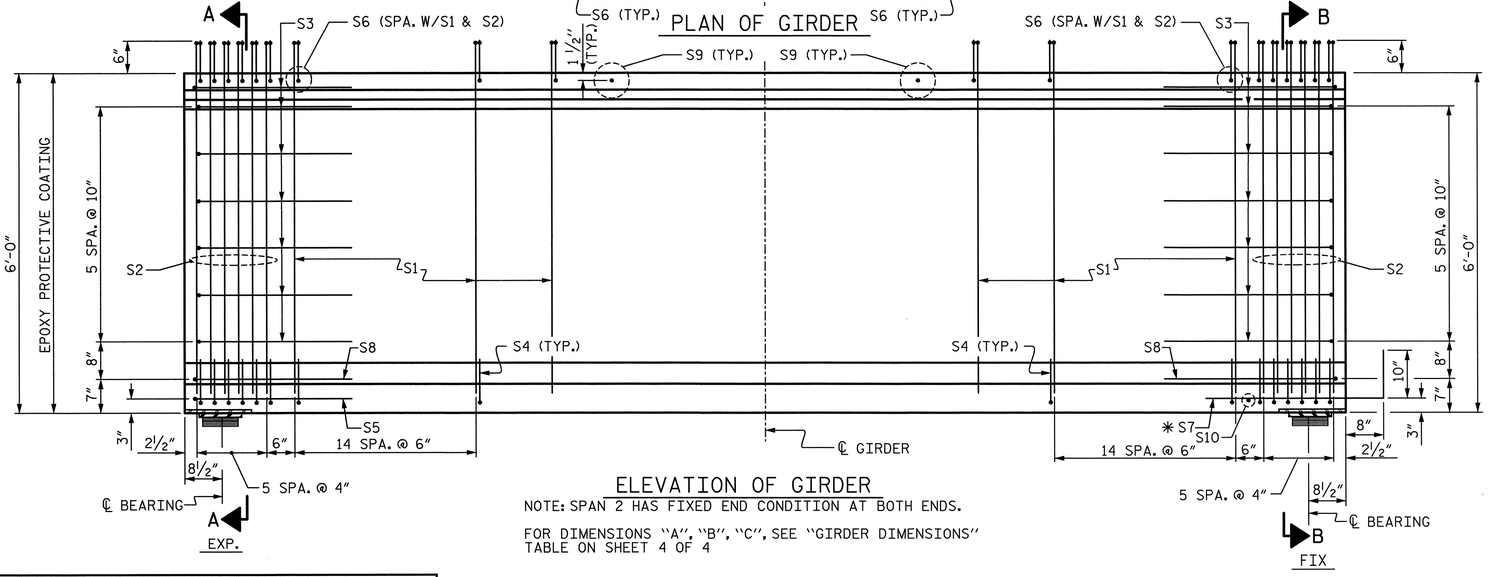

ELEVATION OF GIRDER

NOTE: SPAN 2 HAS FIXED END CONDITION AT BOTH ENDS.

FOR DIMENSIONS "A", "B", "C", SEE "GIRDER DIMENSIONS" TABLE ON SHEET 4 OF 4

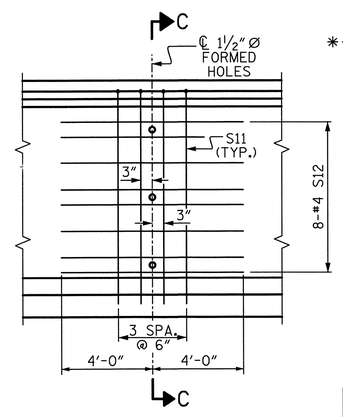

PARTIAL ELEVATION

SHOWING INTERMEDIATE STEEL DIAPHRAGM REINFORCING STEEL FOR EXTERIOR GIRDERS

** SEE "GIRDER DIMENSIONS" TABLE ON SHEET 4 OF 4.

QUANTITIES FOR ONE GIRDER

	REINFORCING STEEL	8000 PSI CONCRETE	0.6" Ø L.R. STRANDS
	LB	CY	No.
EXTERIOR GIRDER	**	**	36
INTERIOR GIRDER	**	**	36

GIRDERS REQUIRED

NUMBER	LENGTH	TOTAL LENGTH
12	107'-11 1/2"	1295'-6"

PROJECT NO. U-2524C

GUILFORD COUNTY

STATION: 9+53.33 -RPAY4-

SHEET 1 OF 4

PLANS PREPARED BY:

SIMPSON ENGINEERS & ASSOCIATES

5640 Dillard Drive
Suite 200
Cary, NC 27518
(919) 852-0468
(919) 852-0598 (Fax)
www.simpsonengr.com

LICENSURE NO. C2521

NORTH CAROLINA PROFESSIONAL SEAL 023908 ENGINEER MARK A. AVERETTE 6-5-2013

STATE OF NORTH CAROLINA
DEPARTMENT OF TRANSPORTATION
RALEIGH

SUPERSTRUCTURE
72" PRESTRESSED CONCRETE MODIFIED BULB TEE CONTINUOUS FOR LIVE LOAD
(3 SPAN CONTINUOUS UNIT 1)
(SPANS 1, 2, & 3)
-RAMP A-

REVISIONS								SHEET NO.
NO.	BY:	DATE:	NO.	BY:	DATE:			S-710
1			3					TOTAL SHEETS
2			4					836

DRAWN BY: R. SEALEY DATE: 4-13
CHECKED BY: M. AVERETTE DATE: 4-13
DESIGN ENGINEER OF RECORD: M. AVERETTE DATE: 4-13

6/5/2013 3:46:01 PM G:\Projects\2011\U-2524 (Guilford Co)\Structures\Ramp A\Drawings\Final\U-2524_sd_rpa_pcg.dgn

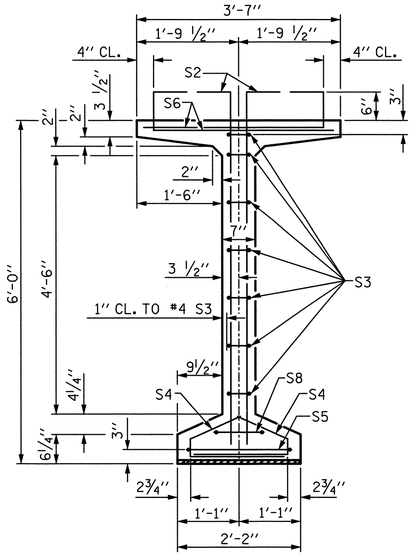

SECTION A-A

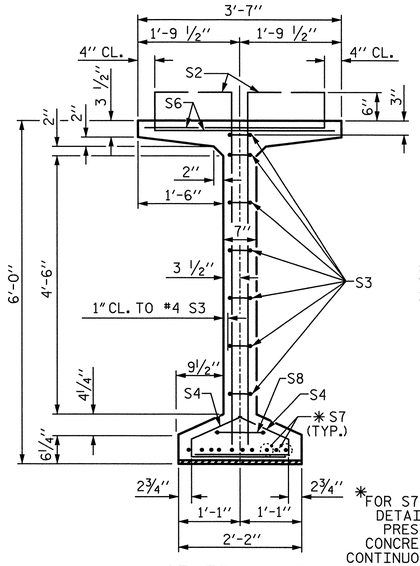

SECTION B-B

* FOR S7 BARS, SEE DETAIL "C" OF PRESTRESSED CONCRETE GIRDER CONTINUOUS FOR LIVE LOAD DETAILS SHEET

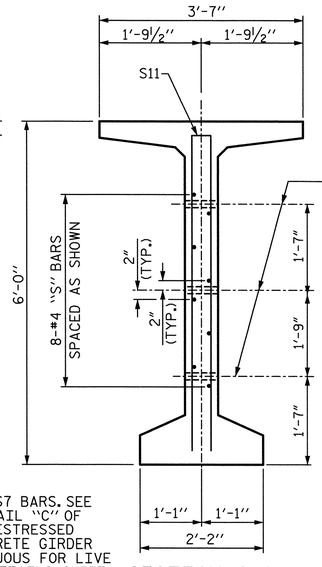

SECTION C-C
(S1, S6 AND S9 BARS NOT SHOWN)

DEBONDING LEGEND

- ● FULLY BONDED STRANDS
- ▲ STRANDS DEBONDED FOR 24'-0" FROM END OF GIRDER
- ◉ STRANDS DEBONDED FOR 6'-0" FROM END OF GIRDER

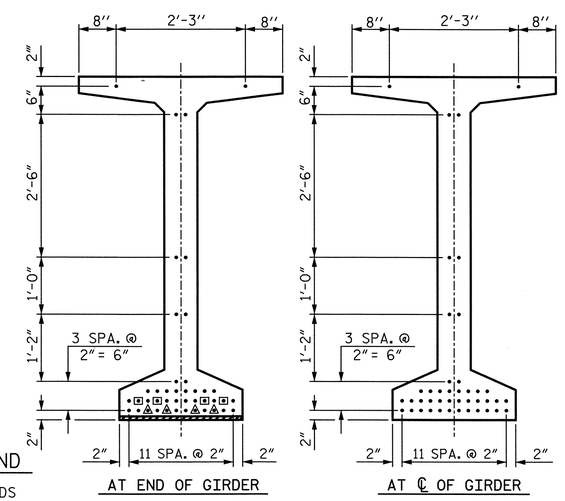

0.6" Ø LOW RELAXATION STRAND LAYOUT

0.6" Ø L. R. GRADE 270 STRANDS		
AREA (SQUARE INCHES)	ULTIMATE STRENGTH (LBS. PER STRAND)	APPLIED PRESTRESS (LBS. PER STRAND)
0.217	58,600	43,950

REINFORCING STEEL FOR ONE GDR

	BAR	NUMBER	SIZE	TYPE	LENGTH	WEIGHT
EXTERIOR GDR.	S1	152	5	1	6'-10"	1083
INTERIOR GDR.	S1	152	5	1	6'-10"	1083
	S2	24	6	1	6'-10"	246
	S3	14	4	2	8'-5"	79
	S4	84	4	3	3'-0"	168
SPAN 4 & 6	S5	1	5	2	9'-10"	10
EXTERIOR GDR.	S6	176	5	4	4'-4"	795
INTERIOR GDR.	S6	176	5	4	4'-4"	795
SPAN 4 & 6	* S7	10	5	STR	3'-8"	38
SPAN 5	* S7	20	5	STR	3'-8"	76
	S8	2	5	2	9'-0"	19
	S9	45	5	STR	3'-3"	153
SPAN 4 & 6	S10	1	3	STR	1'-10"	1
SPAN 5	S10	2	3	STR	1'-10"	1
EXTERIOR GDR.	S11	8	5	2	11'-8"	97
INTERIOR GDR.	S11	16	5	2	11'-8"	195
EXTERIOR GDR.	S12	16	4	STR	8'-0"	86
INTERIOR GDR.	S13	16	4	STR	13'-8"	146

* NOTE: S7 BARS SHALL BE BENT BEFORE SHIPMENT. HEAT BENDING SHALL NOT BE ALLOWED.

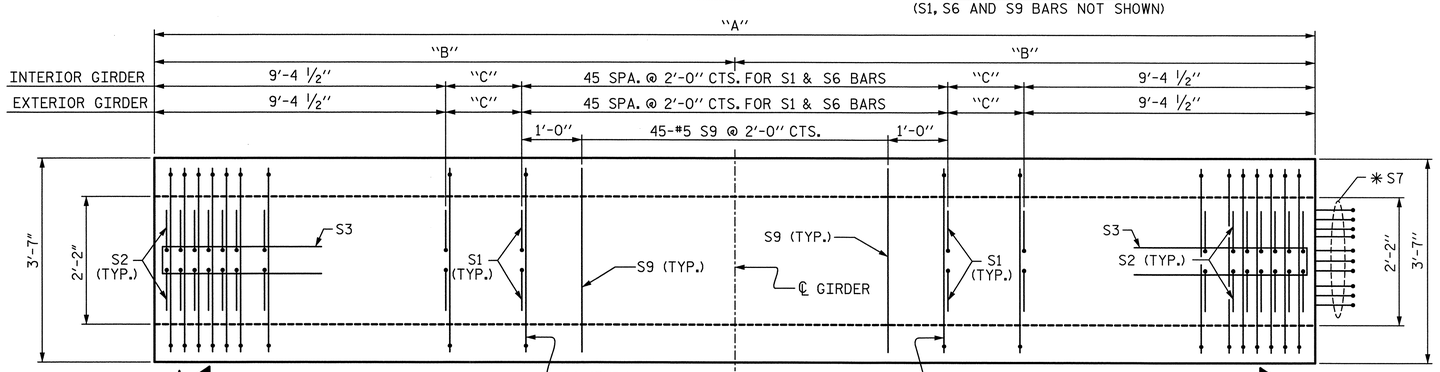

PLAN OF GIRDER

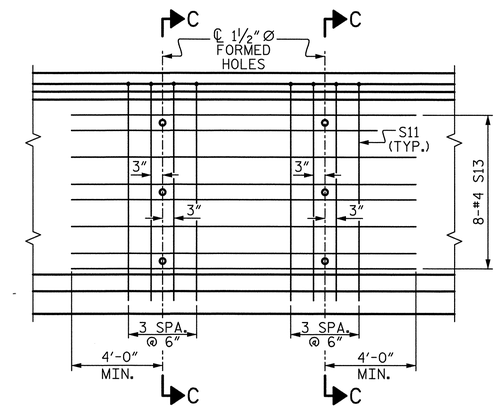

PARTIAL ELEVATION
SHOWING INTERMEDIATE STEEL DIAPHRAGM REINFORCING STEEL FOR INTERIOR GIRDERS

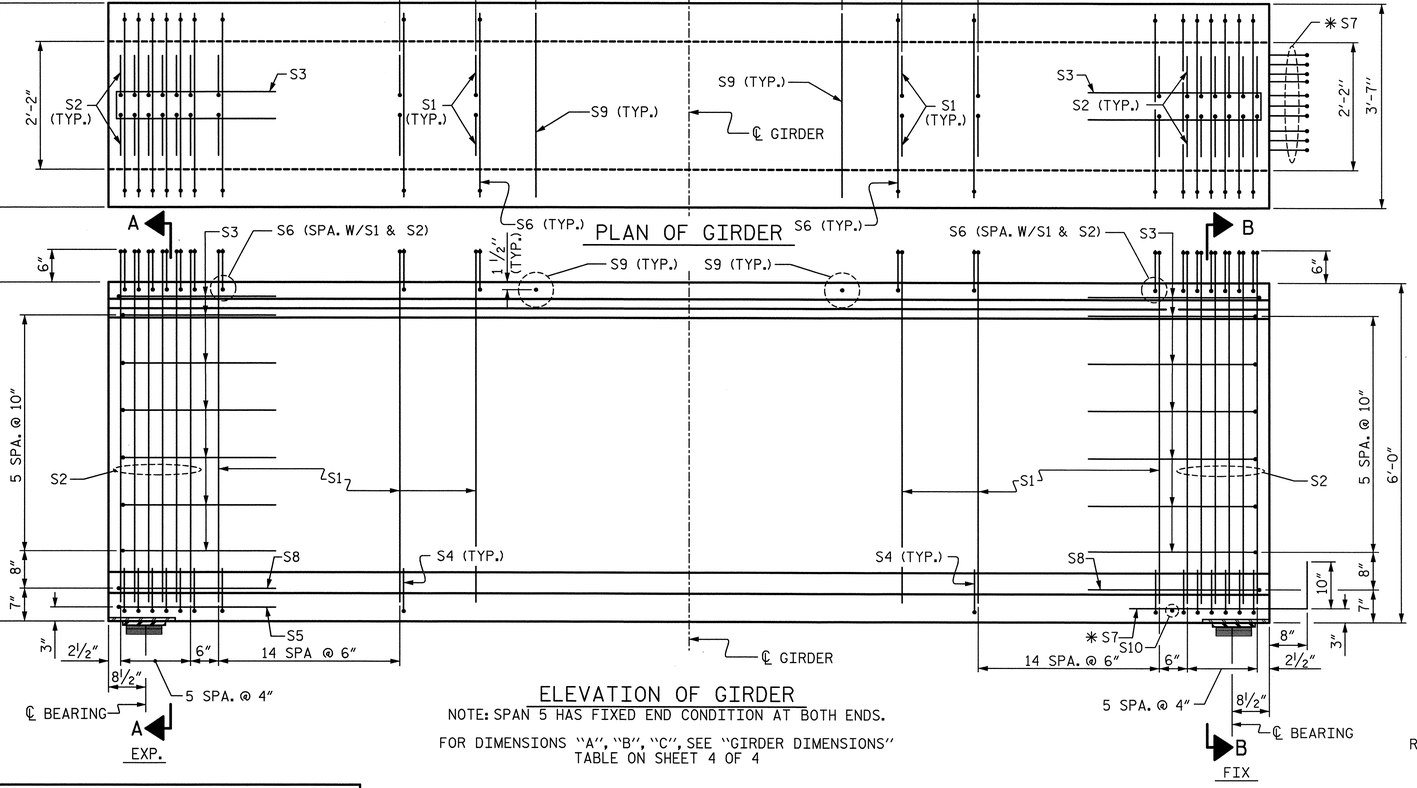

ELEVATION OF GIRDER
NOTE: SPAN 5 HAS FIXED END CONDITION AT BOTH ENDS.

FOR DIMENSIONS "A", "B", "C", SEE "GIRDER DIMENSIONS" TABLE ON SHEET 4 OF 4

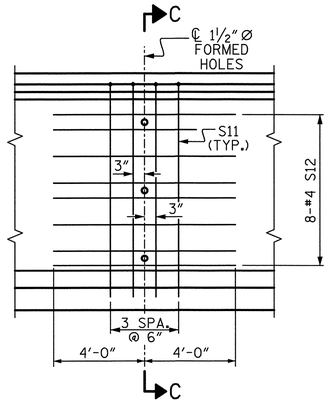

PARTIAL ELEVATION
SHOWING INTERMEDIATE STEEL DIAPHRAGM REINFORCING STEEL FOR EXTERIOR GIRDERS

BAR TYPES

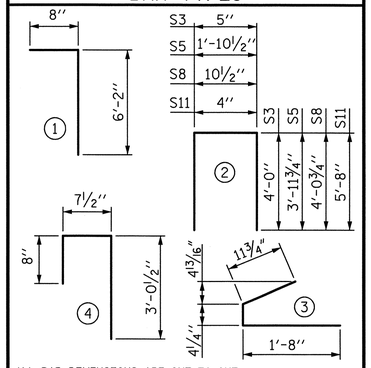

ALL BAR DIMENSIONS ARE OUT-TO-OUT

QUANTITIES FOR ONE GIRDER

	REINFORCING STEEL	8000 PSI CONCRETE	0.6" Ø L.R. STRANDS
	LB	CY	No.
EXTERIOR GIRDER	**	**	42
INTERIOR GIRDER	**	**	42

GIRDERS REQUIRED

NUMBER	LENGTH	TOTAL LENGTH
12	**	1323'-3"

** SEE "GIRDER DIMENSIONS" TABLE ON SHEET 4 OF 4.

PROJECT NO. U-2524C

GUILFORD COUNTY

STATION: 9+53.33 -RPAY4-

SHEET 2 OF 4

SIMPSON ENGINEERS & ASSOCIATES
5640 Dillard Drive
Suite 200
Cary, NC 27518
(919) 852-0468
(919) 852-0598 (Fax)
www.simpsonengr.com
LICENSURE NO. C2521

NORTH CAROLINA PROFESSIONAL SEAL 023906 ENGINEER MARK A. AVERETTE
6-5-2013

STATE OF NORTH CAROLINA
DEPARTMENT OF TRANSPORTATION
RALEIGH

SUPERSTRUCTURE
72" PRESTRESSED CONCRETE MODIFIED BULB TEE CONTINUOUS FOR LIVE LOAD
(3 SPAN CONTINUOUS UNIT 2)
(SPANS 4, 5, & 6)
-RAMP A-

REVISIONS						SHEET NO.
NO.	BY:	DATE:	NO.	BY:	DATE:	S-711
1			3			TOTAL SHEETS
2			4			836

DRAWN BY: R. SEALEY DATE: 4-13
CHECKED BY: M. AVERETTE DATE: 4-13
DESIGN ENGINEER OF RECORD: M. AVERETTE DATE: 4-13

6/5/2013 3:46:06 PM G:\Projects\2011\U-2524 (Guilford Co)\Structures\Ramp A\Drawings\Final\U-2524_sd_rpa_pog.dgn

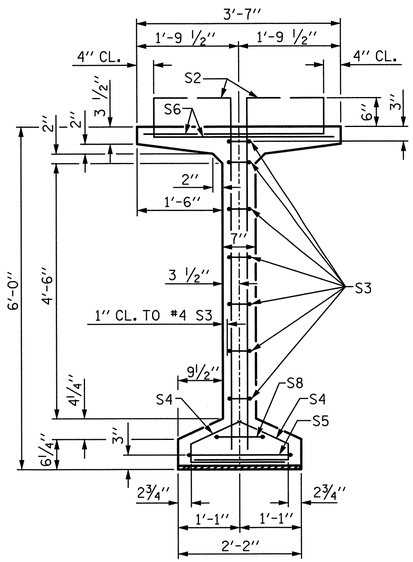

SECTION A-A

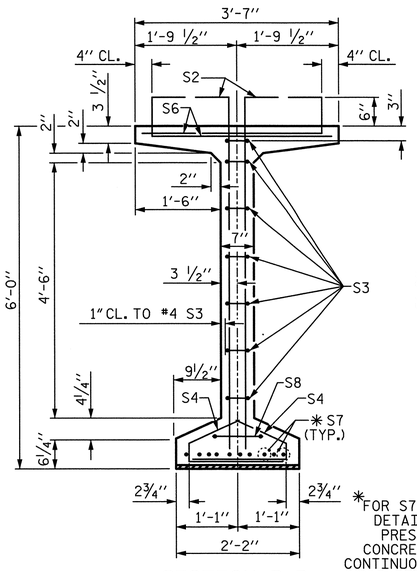

SECTION B-B

*FOR S7 BARS, SEE DETAIL "C" OF PRESTRESSED CONCRETE GIRDER CONTINUOUS FOR LIVE LOAD DETAILS SHEET

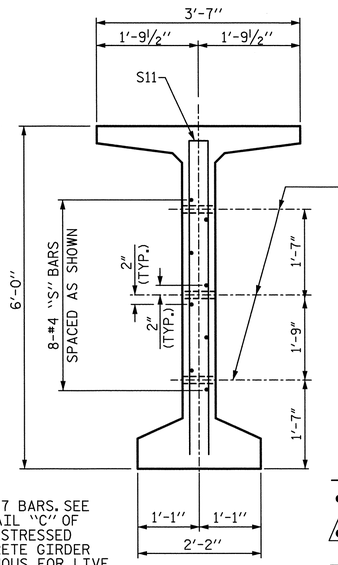

SECTION C-C

(S1, S6 AND S9 BARS NOT SHOWN)

DEBONDING LEGEND

- ● FULLY BONDED STRANDS
- ▲ STRANDS DEBONDED FOR 24'-0" FROM END OF GIRDER
- ▣ STRANDS DEBONDED FOR 6'-0" FROM END OF GIRDER

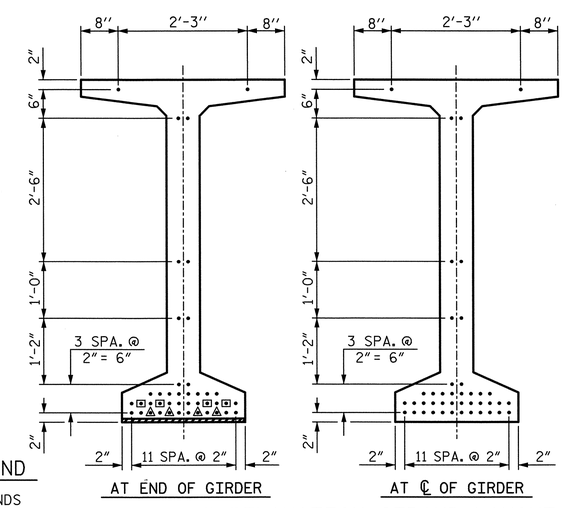

0.6" Ø LOW RELAXATION STRAND LAYOUT

0.6" Ø L. R. GRADE 270 STRANDS

AREA (SQUARE INCHES)	ULTIMATE STRENGTH (LBS. PER STRAND)	APPLIED PRESTRESS (LBS. PER STRAND)
0.217	58,600	43,950

REINFORCING STEEL FOR ONE GDR

	BAR	NUMBER	SIZE	TYPE	LENGTH	WEIGHT
EXTERIOR GDR.	S1	154	5	1	6'-10"	1098
INTERIOR GDR.	S1	154	5	1	6'-10"	1098
	S2	24	6	1	6'-10"	246
	S3	14	4	2	8'-5"	79
	S4	84	4	3	3'-0"	168
SPAN 7 & 9	S5	1	5	2	9'-10"	10
EXTERIOR GDR.	S6	178	5	4	4'-4"	804
INTERIOR GDR.	S6	178	5	4	4'-4"	804
SPAN 7 & 9	* S7	10	5	STR	3'-8"	38
SPAN 8	* S7	20	5	STR	3'-8"	76
	S8	2	5	2	9'-0"	19
	S9	46	5	STR	3'-3"	156
SPAN 7 & 9	S10	1	3	STR	1'-10"	1
SPAN 8	S10	2	3	STR	1'-10"	1
EXTERIOR GDR.	S11	8	5	2	11'-8"	97
INTERIOR GDR.	S11	16	5	2	11'-8"	195
EXTERIOR GDR.	S12	16	4	STR	8'-0"	86
INTERIOR GDR.	S13	16	4	STR	13'-8"	146

* NOTE: S7 BARS SHALL BE BENT BEFORE SHIPMENT. HEAT BENDING SHALL NOT BE ALLOWED.

BAR TYPES

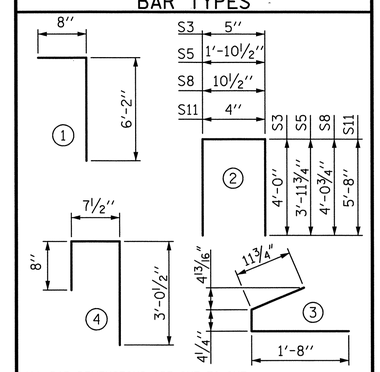

ALL BAR DIMENSIONS ARE OUT-TO-OUT

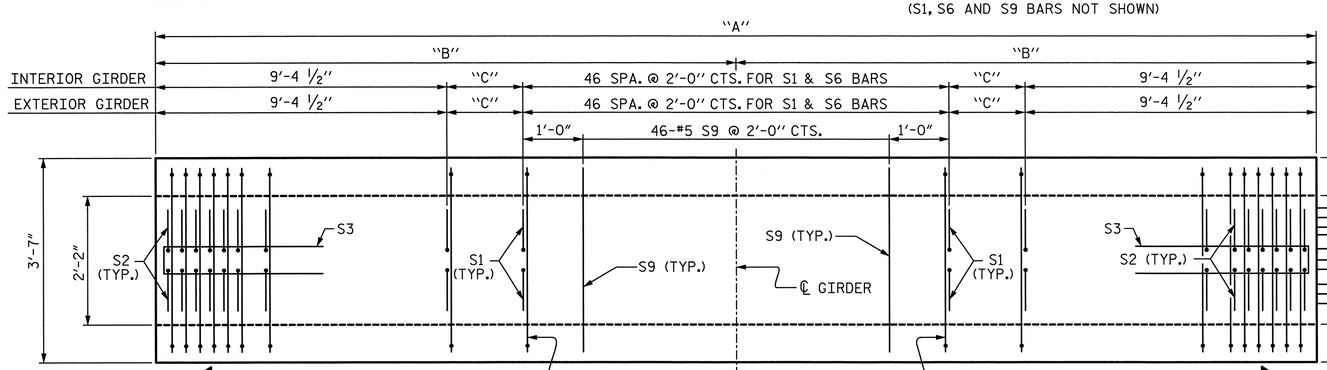

PLAN OF GIRDER

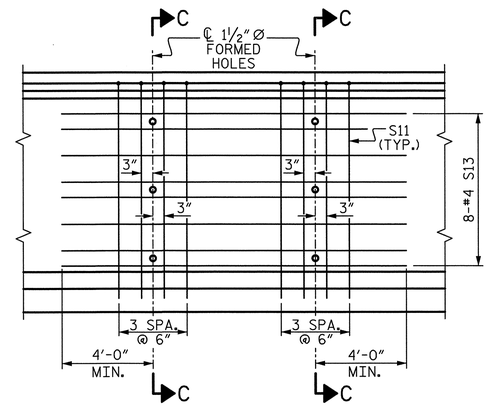

PARTIAL ELEVATION

SHOWING INTERMEDIATE STEEL DIAPHRAGM REINFORCING STEEL FOR INTERIOR GIRDERS

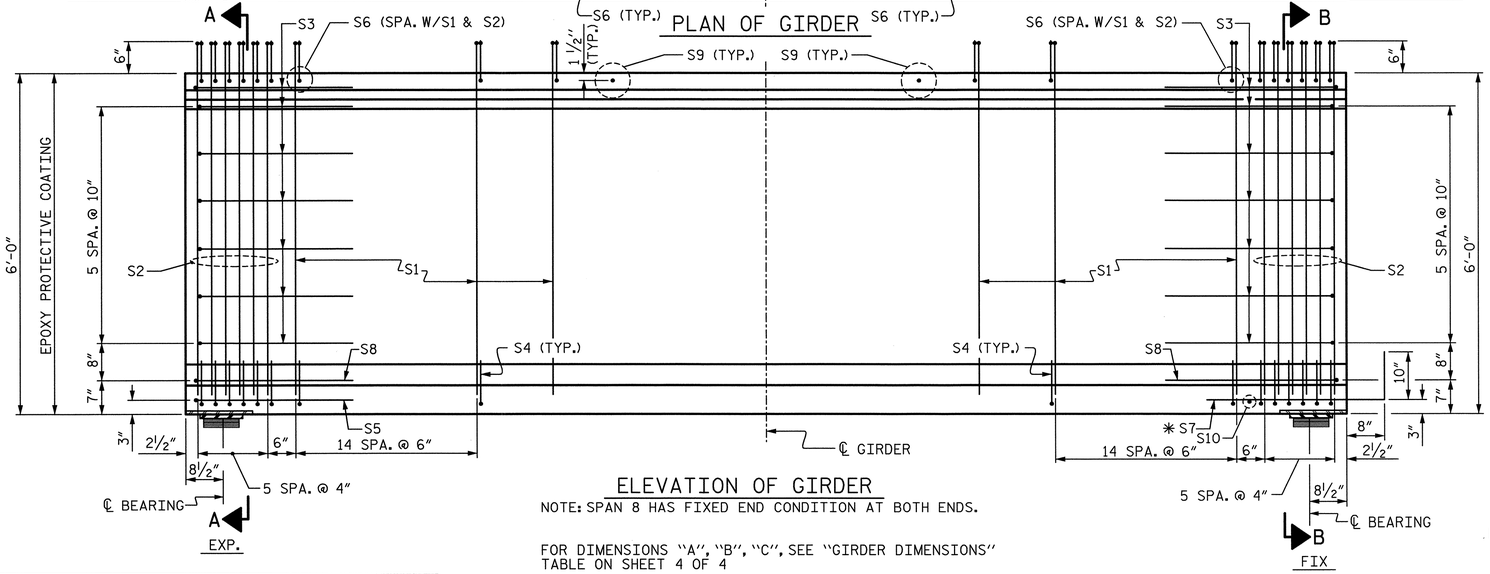

ELEVATION OF GIRDER

NOTE: SPAN 8 HAS FIXED END CONDITION AT BOTH ENDS.

FOR DIMENSIONS "A", "B", "C", SEE "GIRDER DIMENSIONS" TABLE ON SHEET 4 OF 4

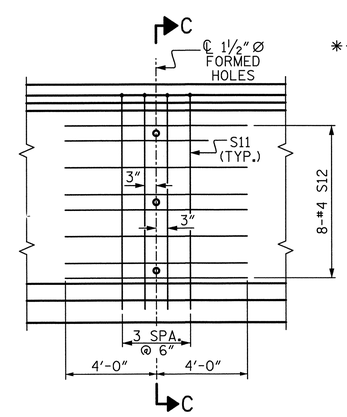

PARTIAL ELEVATION

SHOWING INTERMEDIATE STEEL DIAPHRAGM REINFORCING STEEL FOR EXTERIOR GIRDERS

** SEE "GIRDER DIMENSIONS" TABLE ON SHEET 4 OF 4.

QUANTITIES FOR ONE GIRDER

	REINFORCING STEEL	8000 PSI CONCRETE	0.6" Ø L.R. STRANDS
	LB	CY	No.
EXTERIOR GIRDER	**	**	42
INTERIOR GIRDER	**	**	42

GIRDERS REQUIRED

NUMBER	LENGTH	TOTAL LENGTH
15	**	1681'-2 3/8"

SIMPSON ENGINEERS & ASSOCIATES
5640 Dillard Drive
Suite 200
Cary, NC 27518
(919) 852-0468
(919) 852-0598 (Fax)
www.simpsonengr.com
LICENSURE NO. C2521

NORTH CAROLINA PROFESSIONAL SEAL 023908 ENGINEER MARK A. AVERETTE 6-5-2013

PROJECT NO. U-2524C

GUILFORD COUNTY

STATION: 9+53.33 -RPAY4-

SHEET 3 OF 4

STATE OF NORTH CAROLINA
DEPARTMENT OF TRANSPORTATION
RALEIGH

SUPERSTRUCTURE
72" PRESTRESSED CONCRETE MODIFIED BULB TEE CONTINUOUS FOR LIVE LOAD
(3 SPAN CONTINUOUS UNIT 3)
(SPANS 7, 8, & 9)
-RAMP A-

REVISIONS								SHEET NO.
NO.	BY:	DATE:	NO.	BY:	DATE:			S-712
1			3					TOTAL SHEETS
2			4					836

DRAWN BY: R. SEALEY DATE: 4-13
CHECKED BY: M. AVERETTE DATE: 4-13
DESIGN ENGINEER OF RECORD: M. AVERETTE DATE: 4-13

6/5/2013 3:46:10 PM G:\Projects\2011\U-2524 (Guilford Co)\Structures\Ramp A\Drawings\Final\U-2524_sd_rpa_pog.dgn

GIRDER DIMENSIONS

SPAN	GIRDER	"A"	"B"	"C"	"D"	"E"	"F"	"G"	8,000 PSI CONCRETE (CY)	REINFORCING STEEL (LB)
1,2,3	1G1, 3G1	107'-11½"	53'-11¾"	7¼"	34'-0"	39'-0"	N/A	N/A	23.1	2748
	2G1	107'-11½"	53'-11¾"	7¼"	34'-0"	39'-0"	N/A	N/A	23.1	2776
	1G2, 1G3, 3G2, 3G3	107'-11½"	53'-11¾"	7¼"	34'-0"	35'-0⅜"	3'-11⅝"	3'-11⅝"	23.1	2906
	2G2, 2G3	107'-11½"	53'-11¾"	7¼"	34'-0"	35'-0⅜"	3'-11⅝"	3'-11⅝"	23.1	2934
	1G4, 3G4	107'-11½"	53'-11¾"	7¼"	37'-11⅝"	35'-0⅜"	N/A	N/A	23.1	2748
	2G4	107'-11½"	53'-11¾"	7¼"	37'-11⅝"	35'-0⅜"	N/A	N/A	23.1	2776
4,5,6	4G1, 6G1	110'-11¾"	55'-5⅞"	1'-1⅜"	34'-0"	39'-0"	N/A	N/A	23.8	2775
	5G1	110'-11¾"	55'-5⅞"	1'-1⅜"	34'-0"	39'-0"	N/A	N/A	23.8	2803
	4G2	110'-6"	55'-3"	10½"	34'-0"	34'-4 11/16"	4-1⅝"	4'-7 5/16"	23.7	2933
	5G2	110'-6"	55'-3"	10½"	34'-0"	33'-10⅞"	4'-7⅜"	5'-1⅛"	23.7	2961
	6G2	110'-6"	55'-3"	10½"	34'-0"	33'-5 1/16"	5'-1 3/16"	5'-6 15/16"	23.7	2933
	4G3	110'-0⅜"	55'-0 3/16"	7 11/16"	34'-0"	34'-5 9/16"	4'-0 13/16"	4'-6 7/16"	23.6	2933
	5G3	110'-0⅜"	55'-0 3/16"	7 11/16"	34'-0"	33'-11 13/16"	4'-6½"	5'-0 3/16'	23.6	2961
	6G3	110'-0⅜"	55'-0 3/16"	7 11/16"	34'-0"	33'-6⅛"	5'-0¼"	5'-5⅞"	23.6	2933
	4G4	109'-6⅞"	54'-9 7/16"	4 15/16"	38'-0 1/16"	34'-6 7/16"	N/A	N/A	23.5	2775
	5G4	109'-6⅞"	54'-9 7/16"	4 15/16"	38'-5⅝"	34'-0¾"	N/A	N/A	23.5	2803
	6G4	109'-6⅞"	54'-9 7/16"	4 15/16"	38'-11¼"	33'-7 3/16"	N/A	N/A	23.5	2775
7,8,9	7G1	112'-9½"	56'-4¾"	1'-0¼"	34'-0"	39'-0"	N/A	N/A	24.2	2802
	8G1	112'-9½"	56'-4¾"	1'-0¼"	34'-0"	39'-0"	N/A	N/A	24.2	2830
	9G1	112'-10½"▲	56'-5¼"	1'-0¾"	34'-0½"	39'-0½"	N/A	N/A	24.2	2802
	7G2	112'-5"	56'-2½"	10"	34'-0"	34'-3 1/16"	4'-4½"	4'-8 15/16"	24.1	2960
	8G2	112'-5"	56'-2½"	10"	34'-0"	33'-10⅝"	4'-8 15/16"	5'-1⅜"	24.1	2988
	9G2	112'-5⅞" ▲	56'-2 15/16"	10 7/16"	34'-0 7/16"	33'-6⅝"	5'-1⅜"	5'-5 13/16"	24.1	2960
	7G3	112'-0⅝"	56'-0 5/16'	7 13/16"	34'-0"	34'-3 11/16"	4'-3 15/16"	4'-8 5/16"	24.0	2960
	8G3	112'-0⅝"	56'-0 5/16"	7 13/16"	34'-0"	33'-11¼"	4'-8 5/16'	5'-0¾"	24.0	2988
	9G3	112'-1½" ▲	56'-0¾"	8¼"	34'-0 7/16"	33'-7 5/16"	5'-0¾"	5'-5⅛"	24.0	2960
	7G4	111'-8¼"	55'-10⅛"	5⅝"	34'-0"	34'-4 5/16"	4'-3⅜"	4'-7 11/16"	23.9	2960
	8G4	111'-8¼'	55'-10⅛"	5⅝'	34'-0"	33'-11 15/16"	4'-7¾"	5'-0 1/16"	23.9	2988
	9G4	111'-9" ▲	55'-10½"	6"	34'-0⅜"	33'-7 15/16"	5'-0⅛"	5'-4 7/16"	23.9	2960
	7G5	111'-4"	55'-8"	3½"	38'-2 13/16"	34'-4 15/16"	N/A	N/A	23.9	2802
	8G5	111'-4"	55'-8"	3½"	38'-7⅛"	34'-0 9/16"	N/A	N/A	23.9	2830
	9G5	111'-4¾" ▲	55'-8⅜"	3⅞"	38'-11 13/16"	33'-8 11/16"	N/A	N/A	23.9	2802

▲ SLOPED LENGTH

NOTES:

ALL PRESTRESSING STRANDS SHALL BE 7-WIRE LOW-RELAXATION GRADE 270 STRANDS AND SHALL CONFORM TO AASHTO M203 EXCEPT FOR SAMPLING REQUIREMENTS WHICH SHALL BE IN ACCORDANCE WITH THE STANDARD SPECIFICATIONS.

ALL REINFORCING STEEL SHALL BE GRADE 60.

EMBEDDED PLATE "B-1" SHALL BE GALVANIZED IN ACCORDANCE WITH THE STANDARD SPECIFICATIONS. BEVEL EDGES OF PLATE "B-1" TO GIVE CLOSE FIT BUT NOT TIGHT FIT TO STEEL CASTING FORM.

ANCHOR STUDS SHALL CONFORM TO AASHTO M169 GRADES 1010 THROUGH 1020 OR APPROVED EQUAL, AND SHALL MEET THE TYPE "B" REQUIREMENTS OF SUBSECTION 7.3 OF THE ANSI/AASHTO/AWS D1.5 BRIDGE WELDING CODE.

AT ENDS OF GIRDERS TO BE EMBEDDED IN CONCRETE DIAPHRAGMS OR END WALLS, PRESTRESSING STRANDS MAY EXTEND A MAXIMUM OF 2" BEYOND THE GIRDER ENDS. OTHERWISE, PRESTRESSING STRANDS SHALL BE CUT FLUSH WITH THE GIRDER ENDS.

THE TRANSFER OF LOAD FROM THE ANCHORAGES TO THE GIRDER SHALL BE DONE WHEN CONCRETE HAS REACHED A COMPRESSIVE STRENGTH OF NOT LESS THAN 6,400 PSI.

DEPENDING ON THE TYPE OF SYSTEM USED TO SUPPORT THE DECK SLAB FORMS, PRESET ANCHORS MAY BE NECESSARY IN THE PRESTRESSED CONCRETE GIRDER.

THE TOP SURFACE OF THE GIRDER, EXCLUDING THE OUTSIDE 4", SHALL BE RAKED TO A DEPTH OF ¼".

THE CONTRACTOR HAS THE OPTION TO PROVIDE, AT NO ADDITIONAL COST TO THE DEPARTMENT, 2 ADDITIONAL STRANDS AT THE TOP OF THE GIRDER TO FACILITATE TYING OF THE REINFORCING STEEL. THESE STRANDS SHALL BE PULLED TO A LOAD OF 4,500 LBS.

A 2" X 2" CHAMFER IS ALLOWED AT THE INTERSECTION OF THE WEB AND THE BOTTOM FLANGE.

APPLY EPOXY PROTECTIVE COATING TO END OF GIRDER SURFACES INDICATED IN ELEVATION VIEW.

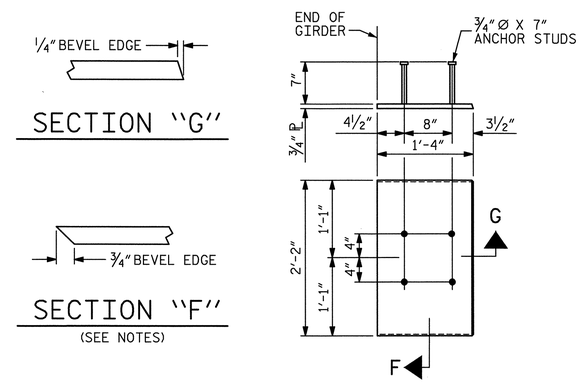

EMBEDDED PLATE "B-1" DETAILS

(2 REQ'D PER GIRDER)

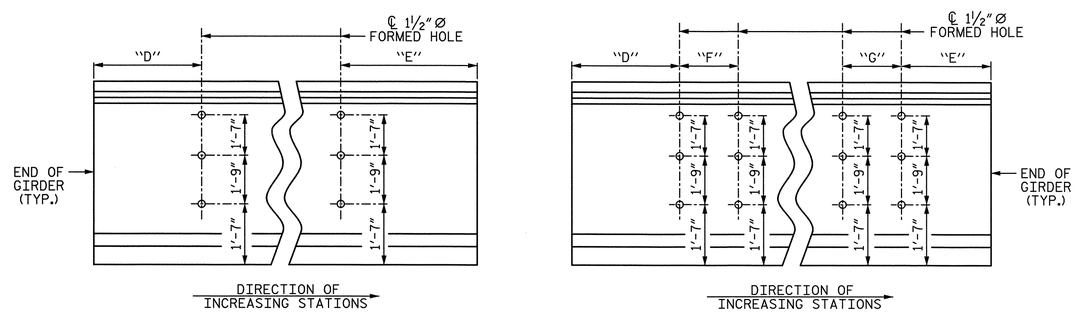

EXTERIOR GIRDERS

INTERIOR GIRDERS

LOCATION OF 1½" Ø HOLES

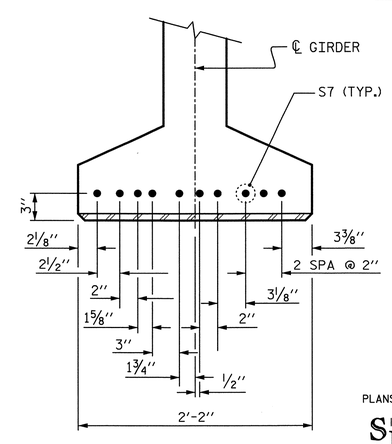

DETAIL "C"

PROJECT NO. U-2524C

GUILFORD COUNTY

STATION: 9+53.33 -RPAY4-

SHEET 4 OF 4

STATE OF NORTH CAROLINA
DEPARTMENT OF TRANSPORTATION
RALEIGH

SUPERSTRUCTURE

72" PRESTRESSED CONCRETE MODIFIED BULB TEE CONTINUOUS FOR LIVE LOAD (DETAILS)
-RAMP A-

PLANS PREPARED BY:
SIMPSON ENGINEERS & ASSOCIATES
5640 Dillard Drive
Suite 200
Cary, NC 27518
(919) 852-0468
(919) 852-0598 (Fax)
www.simpsonengr.com
LICENSURE NO. C-2521

NORTH CAROLINA PROFESSIONAL SEAL 023908 ENGINEER MARK A. AVERETTE
6-5-2013

REVISIONS						SHEET NO.
NO.	BY:	DATE:	NO.	BY:	DATE:	S-713
1			3			TOTAL SHEETS
2			4			836

DRAWN BY: R. SEALEY DATE: 4-13
CHECKED BY: M. AVERETTE DATE: 4-13
DESIGN ENGINEER OF RECORD: M. AVERETTE DATE: 4-13

6/5/2013 3:46:15 PM G:\Projects\2011\U-2524 (Guilford Co)\Structures\Ramp A\Drawings\Final\U-2524_sd_rpa_pcg.dgn

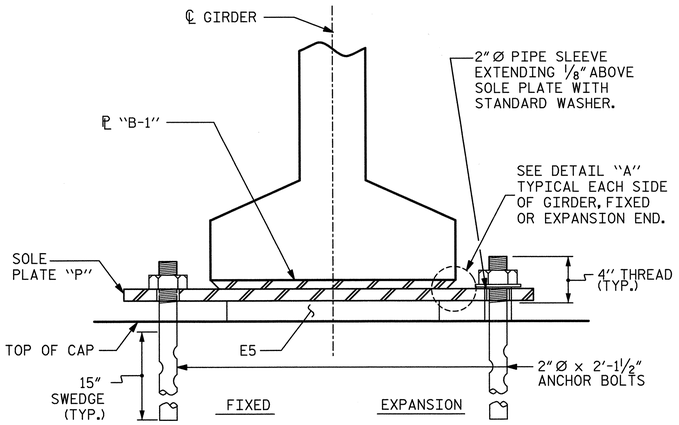

SECTION E-E

MAXIMUM ALLOWABLE SERVICE LOADS	
D.L.+L.L. (NO IMPACT)	
TYPE VI	390 k

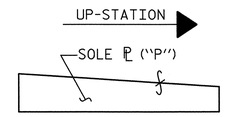

SOLE ℄ PLACEMENT DETAIL

NOTES:

AT ALL FIXED POINTS OF SUPPORT, NUTS FOR ANCHOR BOLTS ARE TO BE TIGHTENED FINGER TIGHT AND THEN BACKED OFF 1/2 TURN. THE THREAD OF THE NUT AND BOLT SHALL THEN BE BURRED WITH A SHARP POINTED TOOL.

THE 2" Ø PIPE SLEEVE SHALL BE CUT FROM SCHEDULE 40 PVC PLASTIC PIPE. THE PVC PLASTIC PIPE SHALL MEET THE REQUIREMENTS OF ASTM D1785.

STEEL SOLE PLATES, ANCHOR BOLTS, NUTS, AND WASHERS SHALL BE GALVANIZED IN ACCORDANCE WITH THE STANDARD SPECIFICATIONS.

PRIOR TO WELDING, GRIND THE GALVANIZED SURFACE OF THE PORTION OF THE EMBEDDED PLATE AND SOLE PLATE THAT ARE TO BE WELDED. AFTER WELDING, DAMAGED GALVANIZED SURFACES SHALL BE REPAIRED IN ACCORDANCE WITH THE STANDARD SPECIFICATIONS.

WHEN WELDING THE SOLE PLATE TO THE EMBEDDED PLATE IN THE GIRDER, USE TEMPERATURE INDICATING WAX PENS, OR OTHER SUITABLE MEANS, TO ENSURE THAT THE TEMPERATURE OF THE SOLE PLATE DOES NOT EXCEED 300°F. TEMPERATURES ABOVE THIS MAY DAMAGE THE ELASTOMER.

SOLE PLATE "P", BOLTS, NUTS, WASHERS, AND PIPE SLEEVE SHALL BE INCLUDED IN THE PAY ITEM FOR PRESTRESSED CONCRETE GIRDERS.

ANCHOR BOLTS SHALL MEET THE REQUIREMENTS OF ASTM A449. NUTS SHALL MEET THE REQUIREMENTS OF AASHTO M291-DH OR AASHTO M292-2H. WASHERS SHALL MEET THE REQUIREMENTS OF AASHTO M293. NO SHOP DRAWINGS ARE REQUIRED FOR ANCHOR BOLTS, NUTS AND WASHERS. SHOP INSPECTION IS REQUIRED.

ALL SURFACES OF BEARING PLATES SHALL BE SMOOTH AND STRAIGHT.

THE ELASTOMER IN THE STEEL REINFORCED BEARINGS SHALL HAVE A SHEAR MODULUS OF 0.160 KSI, IN ACCORDANCE WITH AASHTO M251.

FOR STEEL REINFORCED ELASTOMERIC BEARINGS, SEE SPECIAL PROVISIONS.

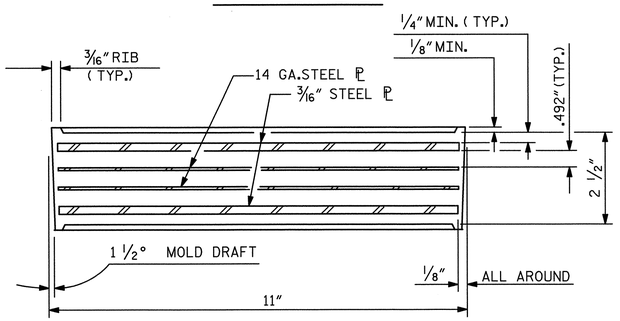

TYPICAL SECTION OF ELASTOMERIC BEARINGS

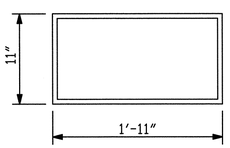

E5 (78 REQ'D)

PLAN VIEW OF ELASTOMERIC BEARING

TYPE VI

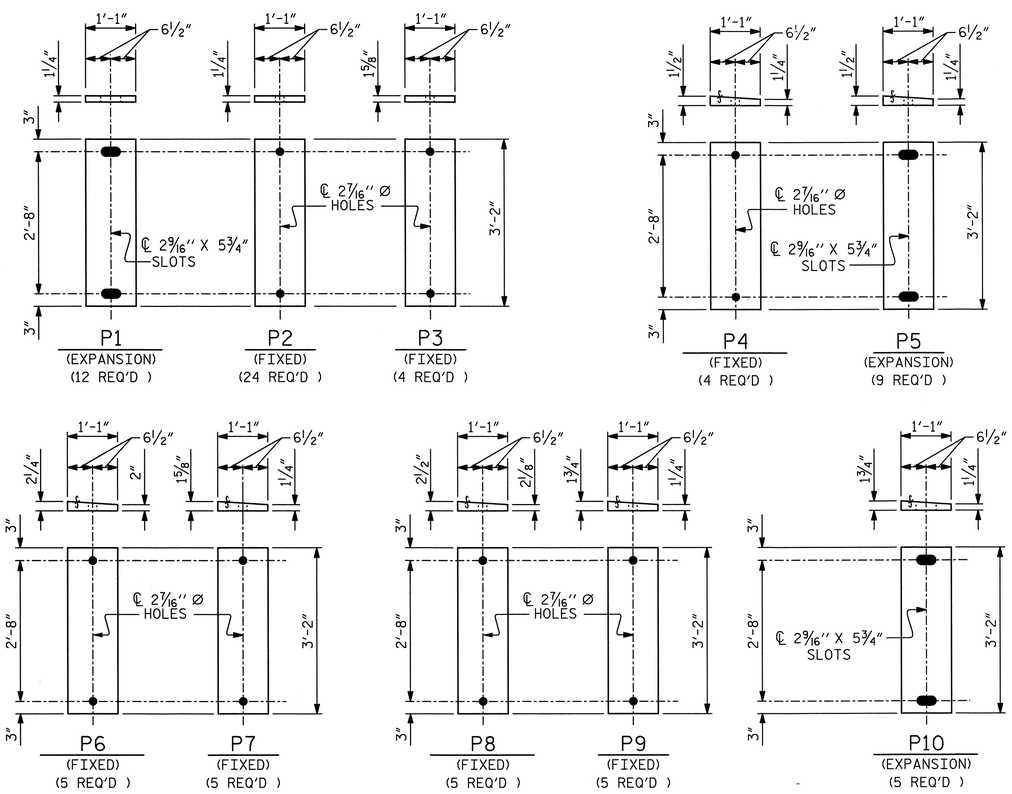

SOLE PLATE DETAILS ("P")

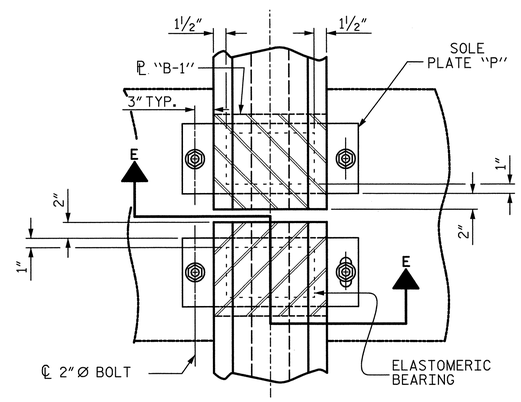

TYPICAL HALF-PLAN (SHOWING CONTINUOUS BENT)

TYPICAL HALF-PLAN (SHOWING SIMPLE BENT)

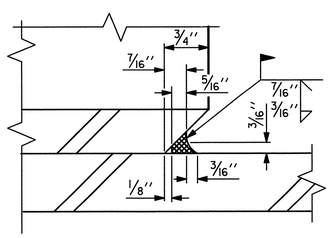

DETAIL "A"

PROJECT NO. U-2524C

GUILFORD COUNTY

STATION: 9+53.33 -RPAY4-

STATE OF NORTH CAROLINA
DEPARTMENT OF TRANSPORTATION
RALEIGH
SUPERSTRUCTURE

ELASTOMERIC BEARING DETAILS

-RAMP A-

PLANS PREPARED BY:

SIMPSON ENGINEERS & ASSOCIATES
5640 Dillard Drive
Suite 200
Cary, NC 27518
(919) 852-0468
(919) 852-0598 (Fax)
www.simpsonengr.com
LICENSURE NO. C-2521

NORTH CAROLINA PROFESSIONAL SEAL 023908 ENGINEER MARK A. AVERETTE
6-5-2013

REVISIONS							
NO.	BY:	DATE:	NO.	BY:	DATE:	SHEET NO. S-714	
1			3			TOTAL SHEETS 836	
2			4				

DRAWN BY:	R. SEALEY	DATE:	4-13
CHECKED BY:	M. AVERETTE	DATE:	4-13
DESIGN ENGINEER OF RECORD:	M. AVERETTE	DATE:	4-13

6/5/2013 3:46:21 PM G:\Projects\2011\U-2524 (Guilford Co)\Structures\Ramp A\Drawings\Final\U-2524_sd_rpa_bg.dgn

DEAD LOAD DEFLECTION TABLE FOR GIRDERS

SPANS 1, 2, 3

0.6″ Ø LOW RELAXATION — GIRDERS 1G1, 2G1, 3G1

TWENTIETH POINTS	0	.05	.10	.15	.20	.25	.30	.35	.40	.45	.50	.55	.60	.65	.70	.75	.80	.85	.90	.95	1.0
CAMBER (GIRDER ALONE IN PLACE) ↑	0	0.054	0.103	0.144	0.179	0.207	0.230	0.247	0.260	0.267	0.269	0.267	0.260	0.247	0.230	0.207	0.179	0.144	0.103	0.054	0
✳ DEFLECTION DUE TO SUPERIMPOSED D.L. ↓	0	0.017	0.037	0.055	0.072	0.087	0.100	0.110	0.117	0.122	0.123	0.122	0.117	0.110	0.100	0.087	0.072	0.055	0.037	0.017	0
FINAL CAMBER ↑	0	7/16″	13/16″	1 1/16″	1 1/4″	1 7/16″	1 9/16″	1 5/8″	1 11/16″	1 3/4″	1 3/4″	1 3/4″	1 11/16″	1 5/8″	1 9/16″	1 7/16″	1 1/4″	1 1/16″	13/16″	7/16″	0

0.6″ Ø LOW RELAXATION — GIRDERS 1G2, 2G2, 3G2 & 1G3, 2G3, 3G3

TWENTIETH POINTS	0	.05	.10	.15	.20	.25	.30	.35	.40	.45	.50	.55	.60	.65	.70	.75	.80	.85	.90	.95	1.0
CAMBER (GIRDER ALONE IN PLACE) ↑	0	0.054	0.103	0.144	0.179	0.207	0.230	0.247	0.260	0.267	0.269	0.267	0.260	0.247	0.230	0.207	0.179	0.144	0.103	0.054	0
✳ DEFLECTION DUE TO SUPERIMPOSED D.L. ↓	0	0.016	0.034	0.050	0.066	0.080	0.091	0.100	0.107	0.111	0.113	0.111	0.107	0.100	0.091	0.079	0.066	0.050	0.034	0.016	0
FINAL CAMBER ↑	0	7/16″	13/16″	1 1/8″	1 3/8″	1 9/16″	1 11/16″	1 3/4″	1 13/16″	1 7/8″	1 7/8″	1 7/8″	1 13/16″	1 3/4″	1 11/16″	1 9/16″	1 3/8″	1 1/8″	13/16″	7/16″	0

0.6″ Ø LOW RELAXATION — GIRDERS 1G4, 2G4, 3G4

TWENTIETH POINTS	0	.05	.10	.15	.20	.25	.30	.35	.40	.45	.50	.55	.60	.65	.70	.75	.80	.85	.90	.95	1.0
CAMBER (GIRDER ALONE IN PLACE) ↑	0	0.054	0.103	0.144	0.179	0.207	0.230	0.247	0.260	0.267	0.269	0.267	0.260	0.247	0.230	0.207	0.179	0.144	0.103	0.054	0
✳ DEFLECTION DUE TO SUPERIMPOSED D.L. ↓	0	0.018	0.038	0.058	0.075	0.091	0.104	0.115	0.122	0.127	0.129	0.127	0.122	0.115	0.104	0.091	0.075	0.058	0.038	0.018	0
FINAL CAMBER ↑	0	7/16″	3/4″	1 1/16″	1 1/4″	1 3/8″	1 1/2″	1 9/16″	1 5/8″	1 11/16″	1 11/16″	1 11/16″	1 5/8″	1 9/16″	1 1/2″	1 3/8″	1 1/4″	1 1/16″	3/4″	7/16″	0

✳ INCLUDES FUTURE WEARING SURFACE
ALL VALUES ARE SHOWN IN FEET (DECIMAL FORM), EXCEPT "FINAL CAMBER", WHICH IS GIVEN IN INCHES (FRACTION FORM).

PROJECT NO. U-2524C
GUILFORD COUNTY
STATION: 9+53.33 -RPAY4-

SHEET 1 OF 5

STATE OF NORTH CAROLINA
DEPARTMENT OF TRANSPORTATION
RALEIGH

SUPERSTRUCTURE
DEAD LOAD DEFLECTION AND GIRDER CAMBER
(3 SPAN CONTINUOUS UNIT 1)
(SPANS 1, 2, 3)
-RAMP A-

REVISIONS						SHEET NO.
NO.	BY:	DATE:	NO.	BY:	DATE:	S-715
1			3			TOTAL SHEETS
2			4			836

PLANS PREPARED BY:
SIMPSON ENGINEERS & ASSOCIATES
5640 Dillard Drive
Suite 200
Cary, NC 27518
(919) 852-0468
(919) 852-0598 (Fax)
www.simpsonengr.com
LICENSURE NO. C-2521

NORTH CAROLINA PROFESSIONAL SEAL 023906 ENGINEER MARK A. AVERETTE
6-5-2013

DRAWN BY: R. SEALEY DATE: 4-13
CHECKED BY: M. AVERETTE DATE: 4-13
DESIGN ENGINEER OF RECORD: M. AVERETTE DATE: 4-13

6/5/2013 3:46:27 PM G:\Projects\2011\U-2524 (Guilford Co)\Structures\Ramp A\Drawings\Final\U-2524_sd_rpa_dl.dgn

DEAD LOAD DEFLECTION TABLE FOR GIRDERS

SPAN 4

0.6"Ø LOW RELAXATION — GIRDER 4G1

TWENTIETH POINTS	0	.05	.10	.15	.20	.25	.30	.35	.40	.45	.50	.55	.60	.65	.70	.75	.80	.85	.90	.95	1.0
CAMBER (GIRDER ALONE IN PLACE) ↑	0	0.066	0.126	0.179	0.223	0.261	0.292	0.315	0.332	0.342	0.346	0.342	0.332	0.315	0.292	0.261	0.223	0.178	0.126	0.066	0
✳ DEFLECTION DUE TO SUPERIMPOSED D.L. ↓	0	0.022	0.045	0.067	0.087	0.105	0.120	0.132	0.141	0.147	0.149	0.147	0.141	0.133	0.120	0.105	0.087	0.067	0.045	0.022	0
FINAL CAMBER ↑	0	1/2"	1"	1 5/16"	1 5/8"	1 7/8"	2 1/16"	2 3/16"	2 5/16"	2 3/8"	2 3/8"	2 3/8"	2 5/16"	2 3/16"	2 1/16"	1 7/8"	1 5/8"	1 5/16"	1"	1/2"	0

0.6"Ø LOW RELAXATION — GIRDERS 4G2 & 4G3

TWENTIETH POINTS	0	.05	.10	.15	.20	.25	.30	.35	.40	.45	.50	.55	.60	.65	.70	.75	.80	.85	.90	.95	1.0
CAMBER (GIRDER ALONE IN PLACE) ↑	0	0.066	0.126	0.177	0.222	0.260	0.291	0.314	0.331	0.341	0.344	0.341	0.331	0.314	0.291	0.260	0.222	0.178	0.126	0.066	0
✳ DEFLECTION DUE TO SUPERIMPOSED D.L. ↓	0	0.020	0.041	0.061	0.080	0.096	0.110	0.121	0.129	0.134	0.136	0.134	0.129	0.121	0.110	0.096	0.080	0.062	0.041	0.020	0
FINAL CAMBER ↑	0	9/16"	1"	1 3/8"	1 11/16"	1 15/16"	2 3/16"	2 5/16"	2 7/16"	2 1/2"	2 1/2"	2 1/2"	2 7/16"	2 5/16"	2 3/16"	1 15/16"	1 11/16"	1 3/8"	1"	9/16"	0

0.6"Ø LOW RELAXATION — GIRDER 4G4

TWENTIETH POINTS	0	.05	.10	.15	.20	.25	.30	.35	.40	.45	.50	.55	.60	.65	.70	.75	.80	.85	.90	.95	1.0
CAMBER (GIRDER ALONE IN PLACE) ↑	0	0.065	0.124	0.175	0.220	0.257	0.287	0.311	0.327	0.337	0.340	0.337	0.327	0.311	0.287	0.257	0.220	0.175	0.124	0.065	0
✳ DEFLECTION DUE TO SUPERIMPOSED D.L. ↓	0	0.021	0.042	0.063	0.082	0.098	0.113	0.124	0.132	0.137	0.139	0.138	0.133	0.124	0.113	0.099	0.082	0.063	0.042	0.021	0
FINAL CAMBER ↑	0	9/16"	1"	1 3/8"	1 5/8"	1 7/8"	2 1/8"	2 1/4"	2 5/16"	2 3/8"	2 7/16"	2 3/8"	2 5/16"	2 1/4"	2 1/16"	1 7/8"	1 5/8"	1 3/8"	1"	9/16"	0

✳ INCLUDES FUTURE WEARING SURFACE
ALL VALUES ARE SHOWN IN FEET (DECIMAL FORM), EXCEPT "FINAL CAMBER", WHICH IS GIVEN IN INCHES (FRACTION FORM).

DEAD LOAD DEFLECTION TABLE FOR GIRDERS

SPAN 5

0.6"Ø LOW RELAXATION — GIRDER 5G1

TWENTIETH POINTS	0	.05	.10	.15	.20	.25	.30	.35	.40	.45	.50	.55	.60	.65	.70	.75	.80	.85	.90	.95	1.0
CAMBER (GIRDER ALONE IN PLACE) ↑	0	0.066	0.126	0.178	0.223	0.261	0.292	0.315	0.332	0.342	0.345	0.342	0.332	0.315	0.292	0.261	0.223	0.178	0.126	0.066	0
✳ DEFLECTION DUE TO SUPERIMPOSED D.L. ↓	0	0.022	0.046	0.069	0.090	0.109	0.124	0.137	0.146	0.152	0.154	0.152	0.147	0.137	0.125	0.109	0.091	0.070	0.047	0.023	0
FINAL CAMBER ↑	0	1/2"	15/16"	1 5/16"	1 5/8"	1 13/16"	2"	2 1/8"	2 1/4"	2 5/16"	2 5/16"	2 5/16"	2 1/4"	2 1/8"	2"	1 13/16"	1 9/16"	1 5/16"	15/16"	1/2"	0

0.6"Ø LOW RELAXATION — GIRDERS 5G2 & 5G3

TWENTIETH POINTS	0	.05	.10	.15	.20	.25	.30	.35	.40	.45	.50	.55	.60	.65	.70	.75	.80	.85	.90	.95	1.0
CAMBER (GIRDER ALONE IN PLACE) ↑	0	0.066	0.126	0.177	0.222	0.260	0.290	0.314	0.331	0.341	0.344	0.341	0.331	0.314	0.290	0.260	0.222	0.177	0.126	0.066	0
✳ DEFLECTION DUE TO SUPERIMPOSED D.L. ↓	0	0.021	0.044	0.065	0.085	0.102	0.117	0.129	0.138	0.143	0.145	0.143	0.138	0.130	0.118	0.103	0.086	0.066	0.044	0.022	0
FINAL CAMBER ↑	0	9/16"	1"	1 3/8"	1 5/8"	1 7/8"	2 1/16"	2 3/16"	2 5/16"	2 3/8"	2 3/8"	2 3/8"	2 5/16"	2 3/16"	2 1/16"	1 7/8"	1 5/8"	1 5/16"	1"	9/16"	0

0.6"Ø LOW RELAXATION — GIRDER 5G4

TWENTIETH POINTS	0	.05	.10	.15	.20	.25	.30	.35	.40	.45	.50	.55	.60	.65	.70	.75	.80	.85	.90	.95	1.0
CAMBER (GIRDER ALONE IN PLACE) ↑	0	0.068	0.124	0.178	0.220	0.260	0.287	0.313	0.327	0.340	0.340	0.340	0.327	0.313	0.287	0.260	0.220	0.178	0.124	0.068	0
✳ DEFLECTION DUE TO SUPERIMPOSED D.L. ↓	0	0.021	0.044	0.065	0.085	0.102	0.117	0.129	0.137	0.142	0.144	0.143	0.137	0.129	0.117	0.102	0.085	0.066	0.044	0.021	0
FINAL CAMBER ↑	0	9/16"	15/16"	1 3/8"	1 5/8"	1 7/8"	2 1/16"	2 3/16"	2 1/4"	2 3/8"	2 3/8"	2 3/8"	2 1/4"	2 3/16"	2 1/16"	1 7/8"	1 5/8"	1 3/8"	15/16"	9/16"	0

✳ INCLUDES FUTURE WEARING SURFACE
ALL VALUES ARE SHOWN IN FEET (DECIMAL FORM), EXCEPT "FINAL CAMBER", WHICH IS GIVEN IN INCHES (FRACTION FORM).

PROJECT NO. U-2524C
GUILFORD COUNTY
STATION: 9+53.33 -RPAY4-

SHEET 2 OF 5

STATE OF NORTH CAROLINA
DEPARTMENT OF TRANSPORTATION
RALEIGH

SUPERSTRUCTURE
DEAD LOAD DEFLECTION AND GIRDER CAMBER
(3 SPAN CONTINUOUS UNIT 2)
(SPANS 4 & 5)
-RAMP A-

PLANS PREPARED BY:
SIMPSON ENGINEERS & ASSOCIATES
5640 Dillard Drive
Suite 200
Cary, NC 27518
(919) 852-0468
(919) 852-0598 (Fax)
www.simpsonengr.com
LICENSURE NO. C-2521

NORTH CAROLINA PROFESSIONAL SEAL 023908 ENGINEER MARK A. AVERETTE
6-5-2013

REVISIONS								SHEET NO.
NO.	BY:	DATE:	NO.	BY:	DATE:			S-716
1			3					TOTAL SHEETS
2			4					836

DRAWN BY: R. SEALEY DATE: 4-13
CHECKED BY: M. AVERETTE DATE: 4-13
DESIGN ENGINEER OF RECORD: M. AVERETTE DATE: 4-13

6/5/2013 3:46:32 PM G:\Projects\2011\U-2524 (Guilford Co)\Structures\Ramp A\Drawings\Final\U-2524_sd_rpa_di.dgn

DEAD LOAD DEFLECTION TABLE FOR GIRDERS

SPAN 6

0.6″ Ø LOW RELAXATION — GIRDER 6G1

TWENTIETH POINTS	0	.05	.10	.15	.20	.25	.30	.35	.40	.45	.50	.55	.60	.65	.70	.75	.80	.85	.90	.95	1.0
CAMBER (GIRDER ALONE IN PLACE) ↑	0	0.066	0.126	0.179	0.223	0.261	0.292	0.315	0.332	0.342	0.345	0.342	0.332	0.315	0.292	0.261	0.223	0.179	0.126	0.066	0
✳ DEFLECTION DUE TO SUPERIMPOSED D.L. ↓	0	0.018	0.048	0.074	0.094	0.114	0.130	0.141	0.153	0.154	0.149	0.154	0.153	0.141	0.131	0.115	0.095	0.075	0.050	0.020	0
FINAL CAMBER ↑	0	9/16″	15/16″	1 1/4″	1 9/16″	1 3/4″	1 15/16″	2 1/8″	2 1/8″	2 1/4″	2 3/8″	2 1/4″	2 1/8″	2 1/16″	1 15/16″	1 3/4″	1 9/16″	1 1/4″	15/16″	9/16″	0

0.6″ Ø LOW RELAXATION — GIRDERS 6G2 & 6G3

TWENTIETH POINTS	0	.05	.10	.15	.20	.25	.30	.35	.40	.45	.50	.55	.60	.65	.70	.75	.80	.85	.90	.95	1.0
CAMBER (GIRDER ALONE IN PLACE) ↑	0	0.066	0.126	0.177	0.222	0.260	0.291	0.314	0.331	0.341	0.344	0.341	0.331	0.314	0.291	0.260	0.222	0.177	0.126	0.066	0
✳ DEFLECTION DUE TO SUPERIMPOSED D.L. ↓	0	0.022	0.047	0.070	0.091	0.110	0.126	0.139	0.148	0.154	0.156	0.154	0.149	0.139	0.127	0.111	0.092	0.071	0.048	0.024	0
FINAL CAMBER ↑	0	1/2″	15/16″	1 5/16″	1 9/16″	1 13/16″	2″	2 1/8″	2 3/16″	2 1/4″	2 1/4″	2 1/4″	2 3/16″	2 1/16″	1 15/16″	1 13/16″	1 9/16″	1 1/4″	15/16″	1/2″	0

0.6″ Ø LOW RELAXATION — GIRDER 6G4

TWENTIETH POINTS	0	.05	.10	.15	.20	.25	.30	.35	.40	.45	.50	.55	.60	.65	.70	.75	.80	.85	.90	.95	1.0
CAMBER (GIRDER ALONE IN PLACE) ↑	0	0.065	0.124	0.175	0.220	0.257	0.287	0.311	0.327	0.337	0.340	0.337	0.327	0.311	0.287	0.257	0.220	0.175	0.124	0.065	0
✳ DEFLECTION DUE TO SUPERIMPOSED D.L. ↓	0	0.022	0.046	0.068	0.088	0.106	0.122	0.134	0.143	0.149	0.151	0.149	0.144	0.135	0.123	0.107	0.089	0.069	0.047	0.023	0
FINAL CAMBER ↑	0	1/2″	15/16″	1 5/16″	1 9/16″	1 13/16″	2″	2 1/8″	2 3/16″	2 1/4″	2 1/4″	2 1/4″	2 3/16″	2 1/8″	2″	1 13/16″	1 9/16″	1 1/4″	15/16″	1/2″	0

✳ INCLUDES FUTURE WEARING SURFACE
ALL VALUES ARE SHOWN IN FEET (DECIMAL FORM), EXCEPT "FINAL CAMBER", WHICH IS GIVEN IN INCHES (FRACTION FORM).

PROJECT NO. U-2524C
GUILFORD COUNTY
STATION: 9+53.33 -RPAY4-

SHEET 3 OF 5

STATE OF NORTH CAROLINA
DEPARTMENT OF TRANSPORTATION
RALEIGH

SUPERSTRUCTURE
DEAD LOAD DEFLECTION AND GIRDER CAMBER
(3 SPAN CONTINUOUS UNIT 2)
(SPAN 6)
-RAMP A-

PLANS PREPARED BY:
SIMPSON ENGINEERS & ASSOCIATES
5640 Dillard Drive
Suite 200
Cary, NC 27518
(919) 852-0468
(919) 852-0598 (Fax)
www.simpsonengr.com
LICENSURE NO. C-2521

NORTH CAROLINA PROFESSIONAL SEAL 023906 ENGINEER MARK A. AVERETTE
6-5-2013

REVISIONS						SHEET NO.
NO.	BY:	DATE:	NO.	BY:	DATE:	S-717
1			3			TOTAL SHEETS
2			4			836

DRAWN BY: R. SEALEY DATE: 4-13
CHECKED BY: M. AVERETTE DATE: 4-13
DESIGN ENGINEER OF RECORD: M. AVERETTE DATE: 4-13

6/5/2013 3:46:37 PM G:\Projects\2011\U-2524 (Guilford Co)\Structures\Ramp A\Drawings\Final\U-2524_sd_rpa_dl.dgn

DEAD LOAD DEFLECTION TABLE FOR GIRDERS

SPAN 7

0.6" Ø LOW RELAXATION	GIRDER 7G1																				
TENTH POINTS	0	.05	.10	.15	.20	.25	.30	.35	.40	.45	.50	.55	.60	.65	.70	.75	.80	.85	.90	.95	1.0
CAMBER (GIRDER ALONE IN PLACE) ↑	0	0.068	0.129	0.182	0.228	0.266	0.298	0.322	0.339	0.349	0.352	0.350	0.339	0.323	0.298	0.269	0.228	0.187	0.129	0.076	0
✳ DEFLECTION DUE TO SUPERIMPOSED D.L. ↓	0	0.018	0.048	0.073	0.092	0.114	0.134	0.142	0.149	0.156	0.156	0.155	0.149	0.141	0.134	0.113	0.091	0.072	0.047	0.017	0
FINAL CAMBER ↑	0	5/8"	1"	1 5/16"	1 5/8"	1 13/16"	1 15/16"	2 3/16"	2 1/4"	2 5/16"	2 3/8"	2 5/16"	2 1/4"	2 3/16"	1 15/16"	1 7/8"	1 5/8"	1 3/8"	1"	11/16"	0

0.6" Ø LOW RELAXATION	GIRDERS 7G2, 7G3, & 7G4																				
TENTH POINTS	0	.05	.10	.15	.20	.25	.30	.35	.40	.45	.50	.55	.60	.65	.70	.75	.80	.85	.90	.95	1.0
CAMBER (GIRDER ALONE IN PLACE) ↑	0	0.067	0.128	0.181	0.226	0.264	0.296	0.319	0.336	0.346	0.349	0.346	0.336	0.319	0.296	0.264	0.226	0.181	0.128	0.067	0
✳ DEFLECTION DUE TO SUPERIMPOSED D.L. ↓	0	0.021	0.042	0.063	0.081	0.098	0.112	0.123	0.132	0.137	0.138	0.137	0.132	0.123	0.112	0.098	0.081	0.062	0.041	0.020	0
FINAL CAMBER ↑	0	09/16"	1"	1 7/16"	1 3/4"	2"	2 3/16"	2 3/8"	2 7/16"	2 1/2"	2 1/2"	2 1/2"	2 7/16"	2 3/8"	2 3/16"	2"	1 3/4"	1 7/16"	1 1/16"	9/16"	0

0.6" Ø LOW RELAXATION	GIRDER 7G5																				
TENTH POINTS	0	.05	.10	.15	.20	.25	.30	.35	.40	.45	.50	.55	.60	.65	.70	.75	.80	.85	.90	.95	1.0
CAMBER (GIRDER ALONE IN PLACE) ↑	0	0.067	0.127	0.179	0.224	0.262	0.293	0.317	0.334	0.344	0.347	0.344	0.334	0.317	0.293	0.262	0.224	0.179	0.127	0.067	0
✳ DEFLECTION DUE TO SUPERIMPOSED D.L. ↓	0	0.022	0.045	0.068	0.088	0.106	0.121	0.134	0.143	0.148	0.150	0.148	0.143	0.133	0.121	0.106	0.088	0.067	0.045	0.022	0
FINAL CAMBER ↑	0	9/16"	1"	1 3/8"	1 11/16"	1 7/8"	2 1/8"	2 1/4"	2 5/16"	2 3/8"	2 7/16"	2 3/8"	2 5/16"	2 1/4"	2 1/8"	1 15/16"	1 11/16"	1 3/8"	1"	9/16"	0

✳ INCLUDES FUTURE WEARING SURFACE
ALL VALUES ARE SHOWN IN FEET (DECIMAL FORM), EXCEPT "FINAL CAMBER", WHICH IS GIVEN IN INCHES (FRACTION FORM).

DEAD LOAD DEFLECTION TABLE FOR GIRDERS

SPAN 8

0.6" Ø LOW RELAXATION	GIRDER 8G1																				
TENTH POINTS	0	.05	.10	.15	.20	.25	.30	.35	.40	.45	.50	.55	.60	.65	.70	.75	.80	.85	.90	.95	1.0
CAMBER (GIRDER ALONE IN PLACE) ↑	0	0.068	0.129	0.182	0.228	0.266	0.298	0.321	0.339	0.349	0.352	0.349	0.339	0.321	0.298	0.266	0.228	0.182	0.129	0.068	0
✳ DEFLECTION DUE TO SUPERIMPOSED D.L. ↓	0	0.019	0.046	0.071	0.094	0.114	0.130	0.143	0.153	0.159	0.161	0.158	0.153	0.143	0.130	0.113	0.094	0.072	0.048	0.022	0
FINAL CAMBER ↑	0	9/16"	1"	1 5/16"	1 5/8"	1 13/16"	2"	2 1/8"	2 1/4"	2 5/16"	2 5/16"	2 5/16"	2 1/4"	2 1/8"	2"	1 13/16"	1 5/8"	1 5/16"	1"	9/16"	0

0.6" Ø LOW RELAXATION	GIRDERS 8G2, 8G3 & 8G4																				
TENTH POINTS	0	.05	.10	.15	.20	.25	.30	.35	.40	.45	.50	.55	.60	.65	.70	.75	.80	.85	.90	.95	1.0
CAMBER (GIRDER ALONE IN PLACE) ↑	0	0.067	0.128	0.181	0.226	0.264	0.295	0.319	0.336	0.346	0.349	0.346	0.336	0.319	0.295	0.264	0.226	0.181	0.128	0.067	0
✳ DEFLECTION DUE TO SUPERIMPOSED D.L. ↓	0	0.021	0.044	0.066	0.085	0.103	0.118	0.130	0.139	0.144	0.146	0.144	0.139	0.130	0.118	0.103	0.085	0.065	0.044	0.021	0
FINAL CAMBER ↑	0	9/16"	1"	1 3/8"	1 11/16"	1 15/16"	2 1/8"	2 1/4"	2 3/8"	2 7/16"	2 7/16"	2 7/16"	2 3/8"	2 1/4"	2 1/8"	1 15/16"	1 11/16"	1 3/8"	1"	9/16"	0

0.6" Ø LOW RELAXATION	GIRDER 8G5																				
TENTH POINTS	0	.05	.10	.15	.20	.25	.30	.35	.40	.45	.50	.55	.60	.65	.70	.75	.80	.85	.90	.95	1.0
CAMBER (GIRDER ALONE IN PLACE) ↑	0	0.067	0.127	0.179	0.224	0.262	0.293	0.317	0.334	0.344	0.347	0.344	0.334	0.317	0.293	0.262	0.224	0.179	0.127	0.067	0
✳ DEFLECTION DUE TO SUPERIMPOSED D.L. ↓	0	0.022	0.045	0.068	0.088	0.106	0.121	0.134	0.143	0.148	0.150	0.148	0.143	0.133	0.121	0.106	0.088	0.067	0.045	0.022	0
FINAL CAMBER ↑	0	9/16"	1"	1 5/16"	1 5/8"	1 7/8"	2 1/16"	2 3/16"	2 5/16"	2 3/8"	2 3/8"	2 3/8"	2 5/16"	2 3/16"	2 1/16"	1 7/8"	1 5/8"	1 5/16"	1"	9/16"	0

✳ INCLUDES FUTURE WEARING SURFACE
ALL VALUES ARE SHOWN IN FEET (DECIMAL FORM), EXCEPT "FINAL CAMBER", WHICH IS GIVEN IN INCHES (FRACTION FORM).

PROJECT NO. U-2524C
GUILFORD COUNTY
STATION: 9+53.33 -RPAY4-

SHEET 4 OF 5

STATE OF NORTH CAROLINA
DEPARTMENT OF TRANSPORTATION
RALEIGH

SUPERSTRUCTURE
DEAD LOAD DEFLECTION AND GIRDER CAMBER
(3 SPAN CONTINUOUS UNIT 3)
(SPANS 7 & 8)
-RAMP A-

PLANS PREPARED BY:
SIMPSON ENGINEERS & ASSOCIATES
5640 Dillard Drive
Suite 200
Cary, NC 27518
(919) 852-0468
(919) 852-0598 (Fax)
www.simpsonengr.com
LICENSURE NO. C-2521

NORTH CAROLINA PROFESSIONAL SEAL 023908 ENGINEER MARK A. AVERETTE
6-5-2013

REVISIONS						SHEET NO.
NO.	BY:	DATE:	NO.	BY:	DATE:	S-718
1			3			TOTAL SHEETS
2			4			836

DRAWN BY: R. SEALEY DATE: 4-13
CHECKED BY: M. AVERETTE DATE: 4-13
DESIGN ENGINEER OF RECORD: M. AVERETTE DATE: 4-13

6/5/2013 3:46:42 PM G:\Projects\2011\U-2524 (Guilford Co)\Structures\Ramp A\Drawings\Final\U-2524_sd_rpa_dl.dgn

DEAD LOAD DEFLECTION TABLE FOR GIRDERS

SPAN 9

0.6" Ø LOW RELAXATION — GIRDER 9G1

TENTH POINTS	0	.05	.10	.15	.20	.25	.30	.35	.40	.45	.50	.55	.60	.65	.70	.75	.80	.85	.90	.95	1.0
CAMBER (GIRDER ALONE IN PLACE) ↑	0	0.068	0.129	0.182	0.228	0.266	0.298	0.322	0.339	0.349	0.352	0.349	0.339	0.322	0.298	0.267	0.228	0.183	0.129	0.068	0
* DEFLECTION DUE TO SUPERIMPOSED D.L. ↓	0	0.024	0.050	0.075	0.097	0.117	0.134	0.148	0.158	0.164	0.166	0.163	0.157	0.147	0.134	0.117	0.097	0.074	0.049	0.023	0
FINAL CAMBER ↑	0	1/2"	15/16"	1 5/16"	1 9/16"	1 13/16"	1 15/16"	2 1/16"	2 3/16"	2 1/4"	2 1/4"	2 1/4"	2 3/16"	2 1/16"	2"	1 13/16"	1 9/16"	1 5/16"	15/16"	9/16"	0

0.6" Ø LOW RELAXATION — GIRDERS 9G2, 9G3 & 9G4

TENTH POINTS	0	.05	.10	.15	.20	.25	.30	.35	.40	.45	.50	.55	.60	.65	.70	.75	.80	.85	.90	.95	1.0
CAMBER (GIRDER ALONE IN PLACE) ↑	0	0.067	0.128	0.181	0.226	0.264	0.296	0.319	0.336	0.346	0.349	0.346	0.336	0.319	0.296	0.264	0.226	0.181	0.128	0.067	0
* DEFLECTION DUE TO SUPERIMPOSED D.L. ↓	0	0.022	0.046	0.069	0.090	0.109	0.124	0.137	0.146	0.152	0.153	0.152	0.146	0.137	0.124	0.108	0.090	0.069	0.046	0.022	0
FINAL CAMBER ↑	0	9/16"	1"	1 5/16"	1 5/8"	1 7/8"	2 1/16"	2 3/16"	2 1/4"	2 5/16"	2 3/8"	2 5/16"	2 1/4"	2 3/16"	2 1/16"	1 7/8"	1 5/8"	1 3/8"	1"	9/16"	0

0.6" Ø LOW RELAXATION — GIRDER 9G5

TENTH POINTS	0	.05	.10	.15	.20	.25	.30	.35	.40	.45	.50	.55	.60	.65	.70	.75	.80	.85	.90	.95	1.0
CAMBER (GIRDER ALONE IN PLACE) ↑	0	0.067	0.127	0.179	0.224	0.262	0.293	0.317	0.334	0.344	0.347	0.344	0.334	0.317	0.293	0.262	0.224	0.179	0.127	0.067	0
* DEFLECTION DUE TO SUPERIMPOSED D.L. ↓	0	0.023	0.047	0.070	0.091	0.109	0.125	0.138	0.147	0.153	0.154	0.152	0.147	0.137	0.125	0.109	0.090	0.069	0.046	0.022	0
FINAL CAMBER ↑	0	1/2"	15/16"	1 5/16"	1 5/8"	1 13/16"	2"	2 1/8"	2 1/4"	2 5/16"	2 5/16"	2 5/16"	2 1/4"	2 1/8"	2"	1 13/16"	1 5/8"	1 5/16"	15/16"	9/16"	0

* INCLUDES FUTURE WEARING SURFACE
ALL VALUES ARE SHOWN IN FEET (DECIMAL FORM), EXCEPT "FINAL CAMBER", WHICH IS GIVEN IN INCHES (FRACTION FORM).

6/5/2013 3:46:47 PM G:\Projects\2011\U-2524 (Guilford Co)\Structures\Ramp A\Drawings\Final\U-2524_sd_rpa_dl.dgn

DRAWN BY: R. SEALEY DATE: 4-13
CHECKED BY: M. AVERETTE DATE: 4-13
DESIGN ENGINEER OF RECORD: M. AVERETTE DATE: 4-13

PLANS PREPARED BY:
SIMPSON ENGINEERS & ASSOCIATES
5640 Dillard Drive
Suite 200
Cary, NC 27518
(919) 852-0468
(919) 852-0598 (Fax)
www.simpsonengr.com
LICENSURE NO. C-2521

NORTH CAROLINA PROFESSIONAL SEAL 023906 ENGINEER MARK A. AVERETTE
6-5-2013

PROJECT NO. U-2524C
GUILFORD COUNTY
STATION: 9+53.33 -RPAY4-

SHEET 5 OF 5

STATE OF NORTH CAROLINA
DEPARTMENT OF TRANSPORTATION
RALEIGH
SUPERSTRUCTURE
DEAD LOAD DEFLECTION AND GIRDER CAMBER
(3 SPAN CONTINUOUS UNIT 3)
(SPAN 9)
-RAMP A-

REVISIONS						SHEET NO.
NO.	BY:	DATE:	NO.	BY:	DATE:	S-719
1			3			TOTAL SHEETS
2			4			836

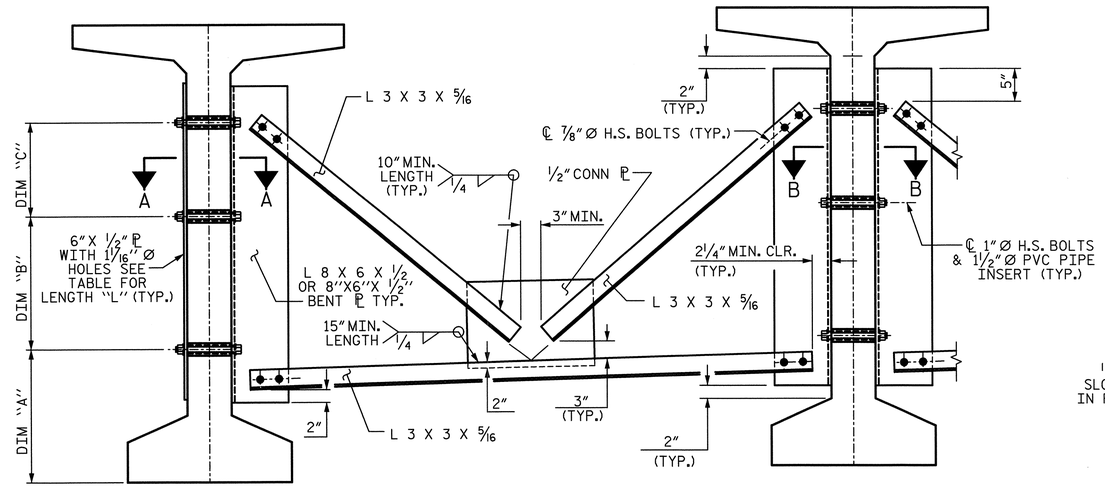

EXTERIOR GIRDER

INTERIOR GIRDER

PART SECTION AT INTERMEDIATE DIAPHRAGM

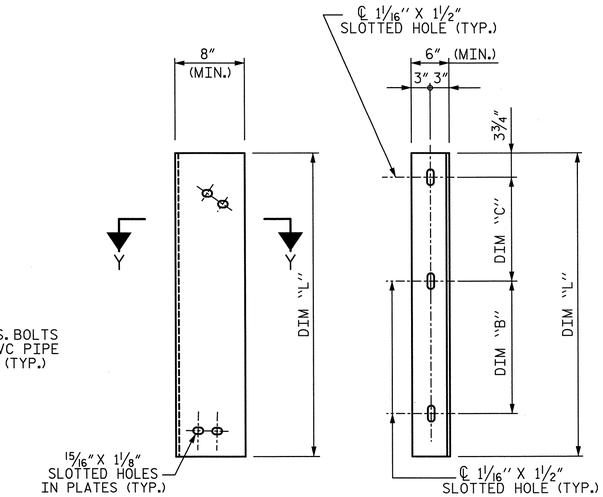

DIAPHRAGM FACE

WEB FACE

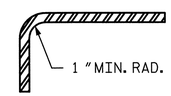

SECTION Y-Y

CONNECTOR PLATE DETAIL

STRUCTURAL STEEL NOTES

ALL INTERMEDIATE DIAPHRAGM STEEL AND CONNECTOR PLATES SHALL BE AASHTO M270 GRADE 50 OR APPROVED EQUAL.

TENSION ON THE ASTM A325 BOLTS THROUGH THE ANGLE MEMBER SHALL BE CALIBRATED USING DIRECT TENSION INDICATOR WASHERS IN ACCORDANCE WITH THE STANDARD SPECIFICATIONS.

TENSION ON THE ASTM A449 BOLTS THROUGH THE GIRDER WEB SHALL BE SNUG TIGHTENED FOLLOWED BY AN ADDITIONAL 1/4 TURN.

THE PLATES, BENT PLATES, AND ANGLES SHALL BE GALVANIZED OR METALLIZED IN ACCORDANCE WITH THE STANDARD SPECIFICATIONS. FOR THERMAL SPRAYED COATINGS (METALLIZATION), SEE SPECIAL PROVISIONS.

FOR METALLIZATION, APPLY AN 8 MIL THICK 99.99 PERCENT ZINC (W-Zn-1) THERMAL SPRAYED COATING WITH A 0.5 MIL THICK SEAL COAT TO ALL STEEL DIAPHRAGM SURFACES IN ACCORDANCE WITH THE THERMAL SPRAYED COATINGS SPECIAL PROVISION AND SECTION 442 OF THE STANDARD SPECIFICATIONS.

GALVANIZE THE HIGH STRENGTH BOLTS, NUTS, WASHERS AND DIRECT TENSION INDICATORS IN ACCORDANCE WITH THE STANDARD SPECIFICATIONS.

USE AN ASTM F436 HARDENED WASHER WITH STANDARD AND SLOTTED HOLES UNDER EACH BOLT HEAD AND NUT.

FOR BOLTS THROUGH THE GIRDER WEB, PROVIDE SUFFICIENT LENGTH OF THREADS ON ALL BOLTS TO ACCOMMODATE WASHERS AND THE THICKNESS OF CONNECTING MEMBER PLUS AT LEAST 1/4" PROJECTION BEYOND THE NUT.

INTERMEDIATE DIAPHRAGM ASSEMBLY SHALL COMPLY WITH SECTION 1072 OF THE STANDARD SPECIFICATIONS.

SUBMIT TWO SETS OF WORKING DRAWINGS FOR THE INTERMEDIATE DIAPHRAGM ASSEMBLY FOR REVIEW, COMMENTS AND ACCEPTANCE. AFTER REVIEW, COMMENTS, AND ACCEPTANCE, SUBMIT SEVEN SETS FOR DISTRIBUTION.

IN THE EXTERIOR BAYS, PLACE TEMPORARY STRUTS BETWEEN PRESTRESSED GIRDERS ADJACENT TO THE STEEL DIAPHRAGMS. STRUTS SHALL REMAIN IN PLACE 3 DAYS AFTER CONCRETE IS PLACED.

THE COST OF THE STEEL DIAPHRAGMS AND ASSEMBLIES SHALL BE INCLUDED IN THE UNIT PRICE BID FOR PRESTRESSED CONCRETE GIRDERS.

TABLE

GIRDER TYPE	DIM "A"	DIM "B"	DIM "C"	DIM "L"
72" BULB TEE	1'-7"	1'-9"	1'-7"	4'-2"

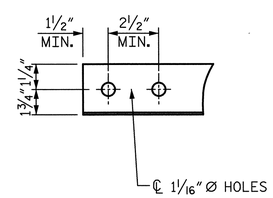

ANGLE END

(L 3 X 3 X 5/16)

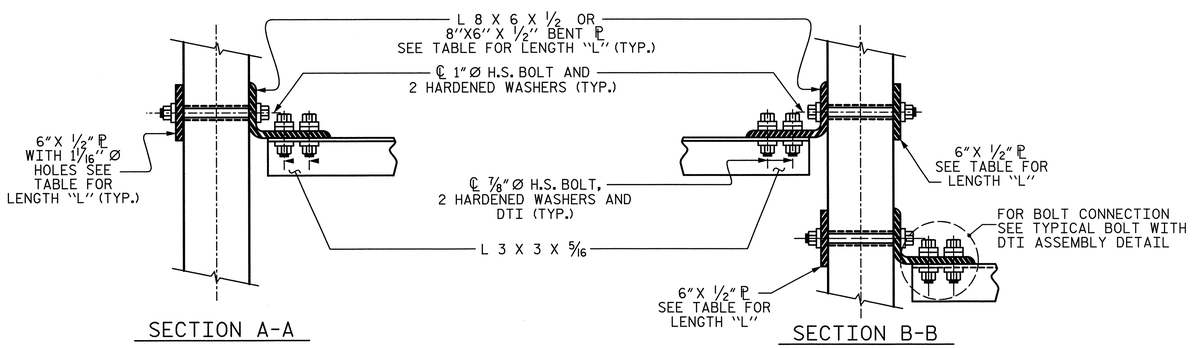

SECTION A-A

SECTION B-B

CONNECTION DETAILS

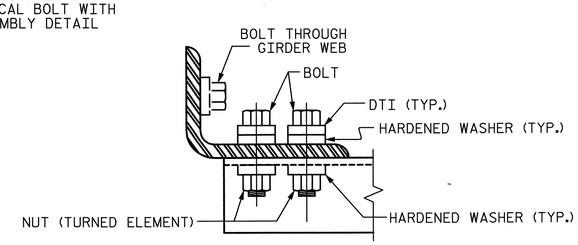

BOLT WITH DTI ASSEMBLY DETAIL

PROJECT NO. U-2524C

GUILFORD COUNTY

STATION: 9+53.33 -RPAY4-

PLANS PREPARED BY:

SIMPSON ENGINEERS & ASSOCIATES
5640 Dillard Drive
Suite 200
Cary, NC 27518
(919) 852-0468
(919) 852-0598 (Fax)
www.simpsonengr.com
LICENSURE NO. C-2521

NORTH CAROLINA PROFESSIONAL SEAL 023906 ENGINEER MARK A. AVERETTE
6-5-2013

STATE OF NORTH CAROLINA
DEPARTMENT OF TRANSPORTATION
RALEIGH

SUPERSTRUCTURE
INTERMEDIATE STEEL DIAPHRAGM FOR 72" MODIFIED BULB TEE PRESTRESSED CONCRETE GIRDERS
-RAMP A-

REVISIONS						SHEET NO.
NO.	BY:	DATE:	NO.	BY:	DATE:	S-720
1			3			TOTAL SHEETS
2			4			836

DRAWN BY: R. SEALEY DATE: 4-13
CHECKED BY: M. AVERETTE DATE: 4-13
DESIGN ENGINEER OF RECORD: M. AVERETTE DATE: 4-13

6/5/2013 3:46:53 PM G:\Projects\2011\U-2524 (Guilford Co)\Structures\Ramp A\Drawings\Final\U-2524_sd_rpa_ts.dgn

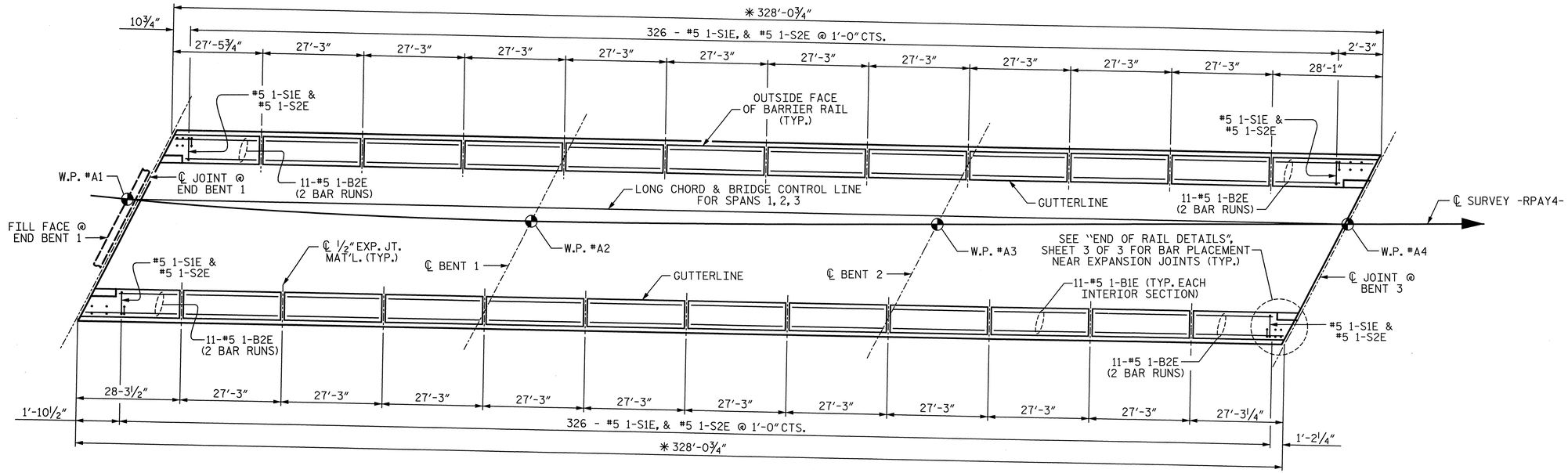

PLAN OF BARRIER RAIL - 3 SPAN CONTINUOUS UNIT 1

NOTE: ALL DIMENSION ARE MEASURED ALONG OUTSIDE FACE OF BARRIER RAIL
✳ @ 60° F

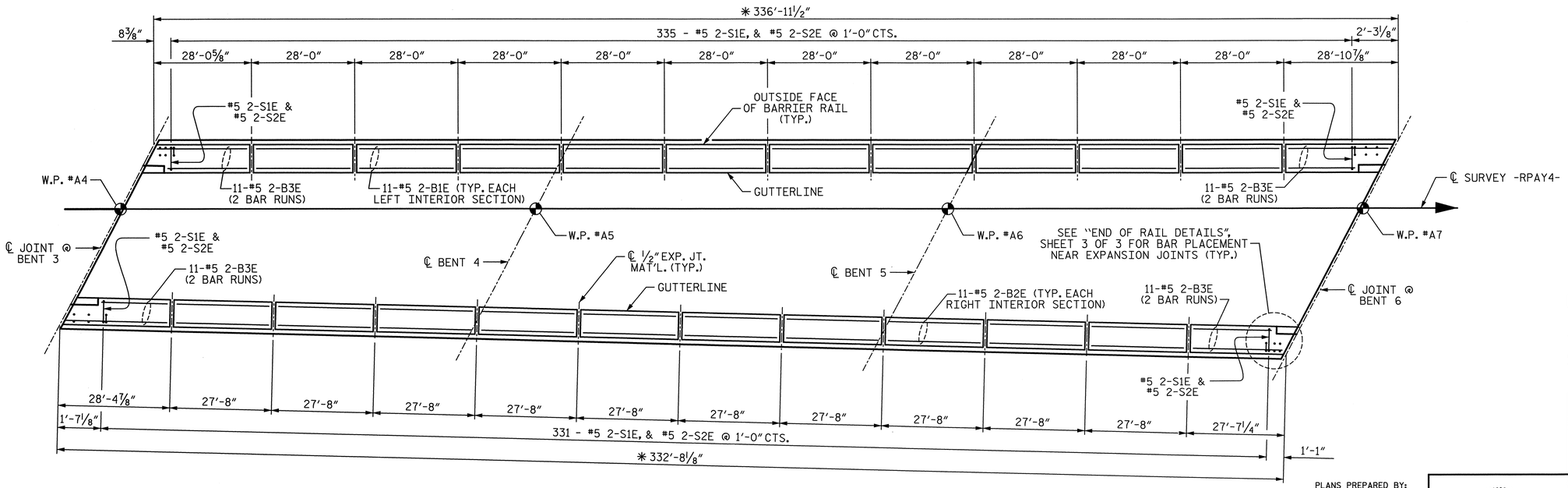

PLAN OF BARRIER RAIL - 3 SPAN CONTINUOUS UNIT 2

NOTE: ALL DIMENSION ARE MEASURED ALONG OUTSIDE FACE OF BARRIER RAIL
✳ @ 60° F

PROJECT NO. U-2524C
GUILFORD COUNTY
STATION: 9+53.33 -RPAY4-

SHEET 1 OF 3

STATE OF NORTH CAROLINA
DEPARTMENT OF TRANSPORTATION
RALEIGH
SUPERSTRUCTURE

CONCRETE BARRIER RAIL

-RAMP A-

PLANS PREPARED BY:
SIMPSON ENGINEERS & ASSOCIATES
5640 Dillard Drive
Suite 200
Cary, NC 27518
(919) 852-0468
(919) 852-0598 (Fax)
www.simpsonengr.com
LICENSURE NO. C-2521

NORTH CAROLINA PROFESSIONAL SEAL 023908 ENGINEER MARK A. AVERETTE
6-5-2013

REVISIONS								SHEET NO.
NO.	BY:	DATE:	NO.	BY:	DATE:			S-721
1			3					TOTAL SHEETS
2			4					836

DRAWN BY: R. SEALEY DATE: 4-13
CHECKED BY: M. AVERETTE DATE: 4-13
DESIGN ENGINEER OF RECORD: M. AVERETTE DATE: 4-13

6/21/2013 8:52:59 AM G:\Projects\2011\U-2524 (Guilford Co)\Structures\Ramp A\Drawings\Final\U-2524_sd_rpa_br.dgn

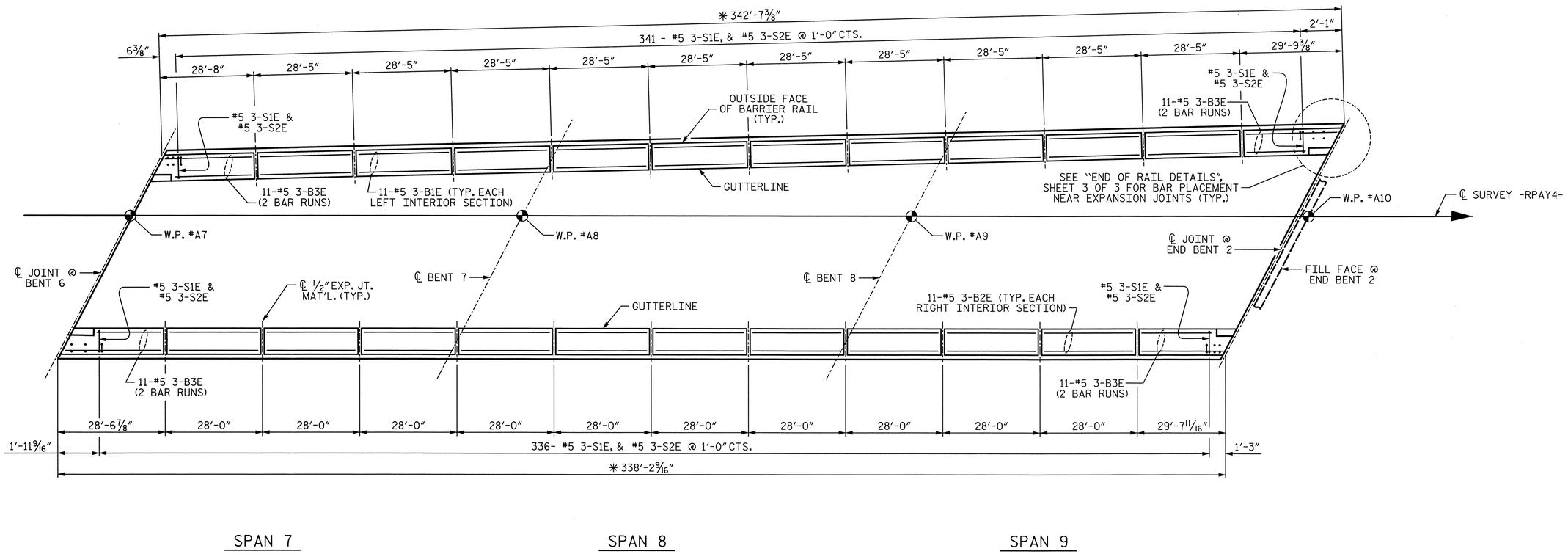

PLAN OF BARRIER RAIL - 3 SPAN CONTINUOUS UNIT 3

NOTE: ALL DIMENSION ARE MEASURED ALONG OUTSIDE FACE OF BARRIER RAIL
✱ @ 60° F

PROJECT NO. U-2524C

GUILFORD COUNTY

STATION: 9+53.33 -RPAY4-

SHEET 2 OF 3

STATE OF NORTH CAROLINA
DEPARTMENT OF TRANSPORTATION
RALEIGH
SUPERSTRUCTURE

CONCRETE BARRIER RAIL

-RAMP A-

PLANS PREPARED BY:

SIMPSON ENGINEERS & ASSOCIATES
5640 Dillard Drive
Suite 200
Cary, NC 27518
(919) 852-0468
(919) 852-0598 (Fax)
www.simpsonengr.com
LICENSURE NO. C-2521

NORTH CAROLINA PROFESSIONAL SEAL 023906 ENGINEER MARK A. AVERETTE
6-5-2013

REVISIONS						SHEET NO.
NO.	BY:	DATE:	NO.	BY:	DATE:	S-722
1			3			TOTAL SHEETS
2			4			836

DRAWN BY: R. SEALEY DATE: 4-13
CHECKED BY: M. AVERETTE DATE: 4-13
DESIGN ENGINEER OF RECORD: M. AVERETTE DATE: 4-13

6/21/2013 8:54:14 AM G:\Projects\2011\U-2524 (Guilford Co)\Structures\Ramp A\Drawings\Final\U-2524_sd_rpa_br.dgn

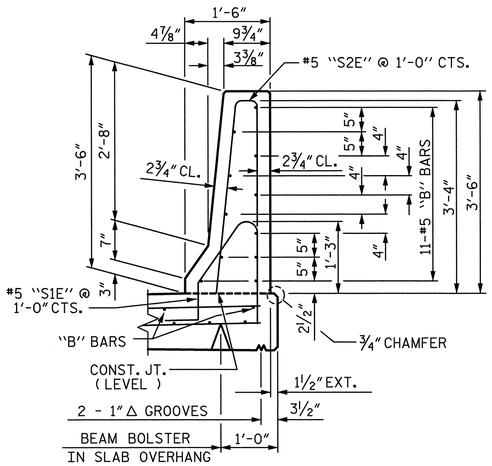

SECTION THRU RAIL

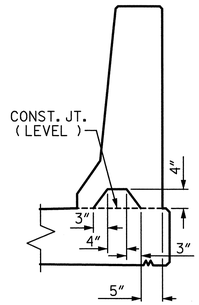

SECTION S-S

AT DAM IN OPEN JOINT
(THIS IS TO BE USED ONLY WHEN SLIP FORM IS USED)

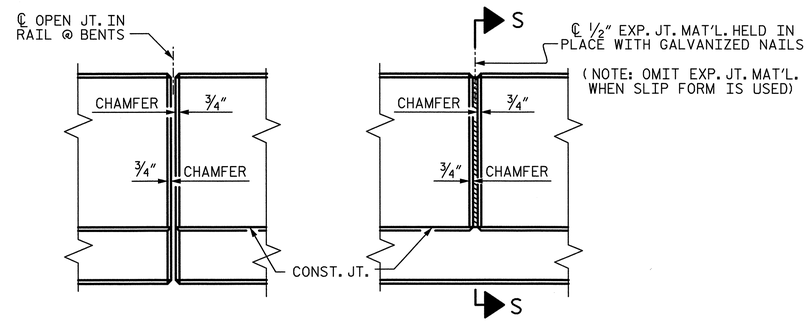

ELEVATION AT EXPANSION JOINTS

BARRIER RAIL DETAILS

NOTE: DETAILS ARE TYPICAL FOR UNITS 1, 2, & 3, THEREFORE BAR MARKS VARY PER UNIT.

BAR TYPES

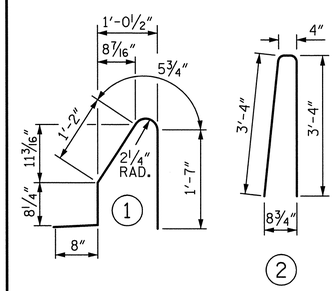

ALL BAR DIMENSIONS ARE OUT TO OUT

BILL OF MATERIAL - UNIT 1

FOR CONCRETE BARRIER RAIL ONLY

BAR	NO.	SIZE	TYPE	LENGTH	WEIGHT
1-B1E	220	5	STR	26'-10"	6157
1-B2E	88	5	STR	15'-8"	1438
1-S1E	652	5	1	4'-7"	3117
1-S2E	652	5	2	7'-0"	4760
1-S3E	16	5	STR	4'-0"	67

EPOXY COATED REINFORCING STEEL 15539 LB

CLASS "AA" CONCRETE 89.2 CY

CONCRETE BARRIER RAIL 656.1 LF

BILL OF MATERIAL - UNIT 2

FOR CONCRETE BARRIER RAIL ONLY

BAR	NO.	SIZE	TYPE	LENGTH	WEIGHT
2-B1E	110	5	STR	27'-7"	3165
2-B2E	110	5	STR	27'-3"	3126
2-B3E	88	5	STR	15'-11"	1461
2-S1E	666	5	1	4'-7"	3184
2-S2E	666	5	2	7'-0"	4862
2-S3E	16	5	STR	4'-0"	67

EPOXY COATED REINFORCING STEEL 15865 LB

CLASS "AA" CONCRETE 91.2 CY

CONCRETE BARRIER RAIL 669.7 LF

BILL OF MATERIAL - UNIT 3

FOR CONCRETE BARRIER RAIL ONLY

BAR	NO.	SIZE	TYPE	LENGTH	WEIGHT
3-B1E	110	5	STR	28'-0"	3212
3-B2E	110	5	STR	27'-7"	3165
3-B3E	88	5	STR	16'-8"	1530
3-S1E	677	5	1	4'-7"	3236
3-S2E	677	5	2	7'-0"	4943
3-S3E	16	5	STR	4'-0"	67

EPOXY COATED REINFORCING STEEL 16153 LB

CLASS "AA" CONCRETE 92.5 CY

CONCRETE BARRIER RAIL 680.8 LF

TOTAL CONCRETE BARRIER RAIL ON BRIDGE DECK= 2006.6 LF

"E" INDICATES EPOXY COATED REINFORCING STEEL

NOTES:

THE BARRIER RAIL IN EACH CONTINUOUS UNIT AND ON APPROACH SLABS SHALL NOT BE CAST UNTIL ALL SLAB CONCRETE IN THAT CONTINUOUS UNIT AND ON APPROACH SLAB HAS BEEN CAST AND HAS REACHED A MINIMUM COMPRESSIVE STRENGTH OF 3,000 PSI.

ALL REINFORCING STEEL IN BARRIER RAILS SHALL BE EPOXY COATED.

GROOVED CONTRACTION JOINTS, ½" IN DEPTH, SHALL BE TOOLED IN ALL EXPOSED FACES OF THE BARRIER RAIL AND IN ACCORDANCE WITH ARTICLE 825-10(B) OF THE STANDARD SPECIFICATIONS. THE CONTRACTION JOINT SHALL BE LOCATED AT EACH THIRD POINT BETWEEN BARRIER RAIL EXPANSION JOINTS. ONLY ONE CONTRACTION JOINT IS REQUIRED AT MIDPOINT OF BARRIER RAIL SEGMENTS LESS THAN 20 FEET IN LENGTH AND NO CONTRACTION JOINTS ARE REQUIRED FOR THOSE SEGMENTS LESS THAN 10 FEET IN LENGTH.

THE #5 1-S1E, 2-S1E, 3-S1E, AND #5 1-S2E, 2-S2E, 3-S2E BARS MAY BE SHIFTED AS NECESSARY TO MAINTAIN A 2" MINIMUM CLEARANCE FROM THE CENTERLINE OF THE EXPANSION JOINT IN BARRIER RAIL SECTIONS.

FOR DETAILS, QUANTITIES, AND LIN. FEET FOR CONCRETE BARRIER RAIL ON APPROACH SLABS SEE "BRIDGE APPROACH SLAB DETAILS" SHEET.

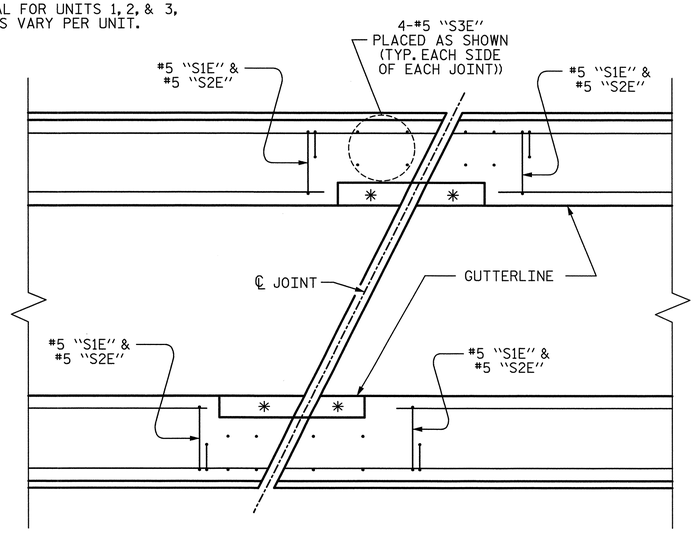

PLAN

✱ FOR RECESS DETAILS SEE "EXPANSION JOINT SEAL DETAILS", SHEET 2 OF 3

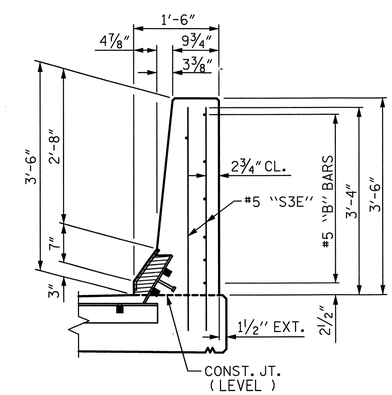

END VIEW @ EXP. JOINTS

END OF RAIL DETAILS @ EXP. JOINTS

NOTE: DETAILS ARE TYPICAL FOR UNITS 1, 2, & 3, THEREFORE BAR MARKS VARY PER UNIT.

PROJECT NO. U-2524C

GUILFORD COUNTY

STATION: 9+53.33 -RPAY4-

SHEET 3 OF 3

STATE OF NORTH CAROLINA
DEPARTMENT OF TRANSPORTATION
RALEIGH
SUPERSTRUCTURE

CONCRETE BARRIER RAIL

-RAMP A-

PLANS PREPARED BY:

SIMPSON ENGINEERS & ASSOCIATES
5640 Dillard Drive
Suite 200
Cary, NC 27518
(919) 852-0468
(919) 852-0598 (Fax)
www.simpsonengr.com
LICENSURE NO. C-2521

NORTH CAROLINA PROFESSIONAL SEAL 023906 ENGINEER MARK A. AVERETTE
6-5-2013

REVISIONS							SHEET NO.
NO.	BY:	DATE:	NO.	BY:	DATE:		S-723
1			3				TOTAL SHEETS
2			4				836

DRAWN BY: R. SEALEY DATE: 4-13
CHECKED BY: M. AVERETTE DATE: 4-13
DESIGN ENGINEER OF RECORD: M. AVERETTE DATE: 4-13

6/5/2013 3:46:59 PM G:\Projects\2011\U-2524 (Guilford Co)\Structures\Ramp A\Drawings\Final\U-2524_sd_rpa_br.dgn

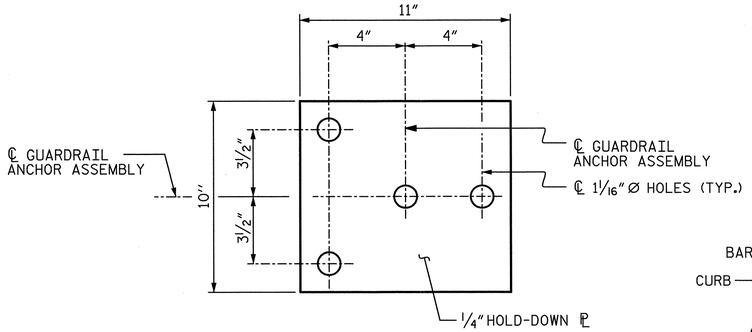

PLAN

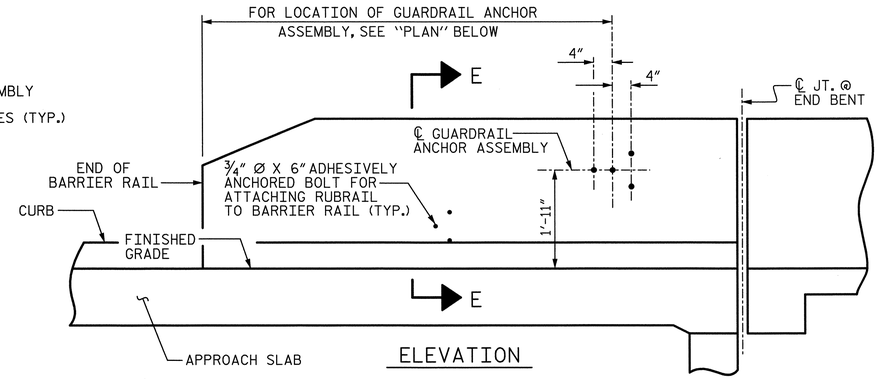

ELEVATION

NOTES:

THE GUARDRAIL ANCHOR ASSEMBLY SHALL CONSIST OF A 1/4" HOLD-DOWN PLATE AND 4 - 7/8" Ø BOLTS WITH NUTS AND WASHERS, RUBRAIL, AND ADHESIVELY ANCHORED BOLTS.

THE HOLD-DOWN PLATE SHALL CONFORM TO AASHTO M270 GRADE 36. AFTER FABRICATION, THE HOLD-DOWN PLATE SHALL BE HOT-DIP GALVANIZED IN ACCORDANCE WITH AASHTO M111.

BOLTS SHALL CONFORM TO THE REQUIREMENTS OF ASTM A307 AND NUTS SHALL CONFORM TO THE REQUIREMENTS OF AASHTO M291. BOLTS, NUTS AND WASHERS SHALL BE GALVANIZED. (AT THE CONTRACTOR'S OPTION, STAINLESS STEEL BOLTS, NUTS AND WASHERS MAY BE USED AS AN ALTERNATE FOR THE 7/8" Ø GALVANIZED BOLTS, NUTS AND WASHERS. THEY SHALL CONFORM TO OR EXCEED THE MECHANICAL REQUIREMENTS OF ASTM A307. THE USE OF THIS ALTERNATE SHALL BE APPROVED BY THE ENGINEER.)

THE GUARDRAIL ANCHOR ASSEMBLY IS REQUIRED AT ALL POINTS WHERE APPROACH GUARDRAIL IS TO BE ATTACHED TO THE END OF BARRIER RAIL. FOR POINTS OF ATTACHMENT, SEE SKETCH.

AFTER INSTALLATION, THE EXPOSED THREAD OF THE BOLT SHALL BE BURRED WITH A SHARP POINTED TOOL.

THE COST OF THE GUARDRAIL ANCHOR ASSEMBLY SHALL BE INCLUDED IN THE UNIT CONTRACT PRICE BID FOR CONCRETE BARRIER RAIL.

THE 1 1/4" Ø HOLES SHALL BE FORMED OR DRILLED WITH A CORE BIT. IMPACT TOOLS WILL NOT BE PERMITTED. ANY CONCRETE DAMAGED BY THIS WORK SHALL BE REPAIRED TO THE SATISFACTION OF THE ENGINEER.

THE C6 X 8.2 RUBRAIL IS TO BE ADHESIVELY ANCHORED TO THE RAIL USING THREE 3/4" Ø X 6" BOLTS WITH WASHERS. LEVEL ONE FIELD TESTING IS REQUIRED, AND THE YIELD LOAD OF THE 3/4" Ø BOLT IS 12 KIPS. FOR ADHESIVELY ANCHORED ANCHOR BOLTS OR DOWELS, SEE STANDARD SPECIFICATIONS. SEE ROADWAY STANDARD 862.03 FOR DETAILS AND LOCATION OF THE RUBRAIL.

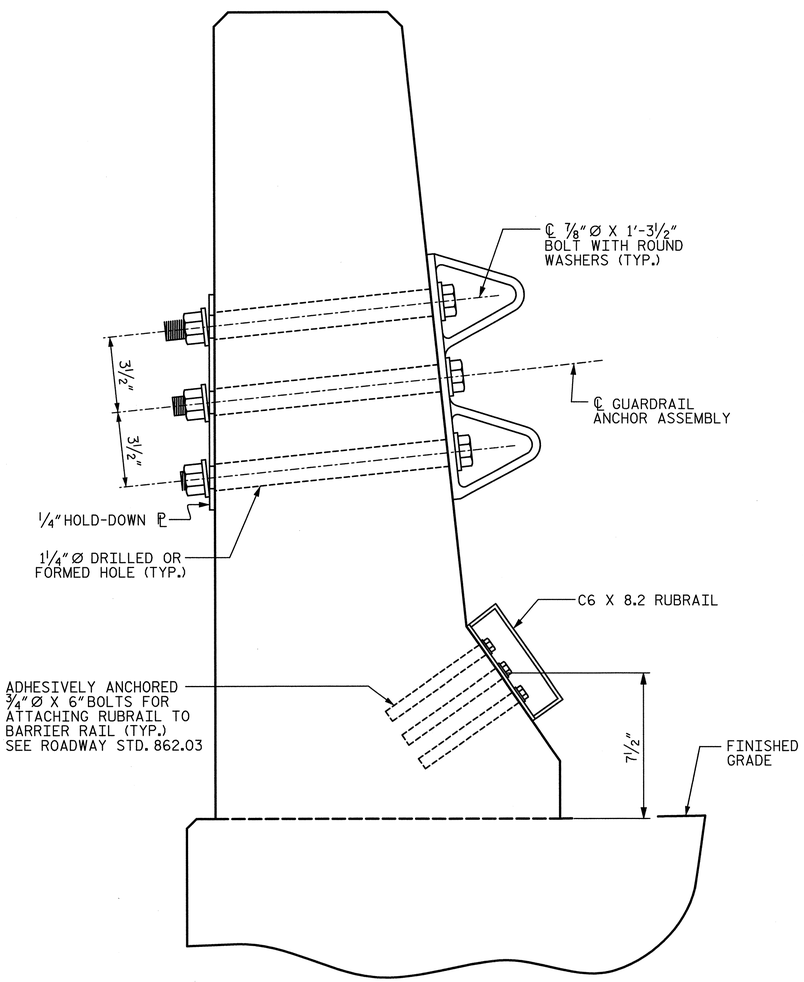

SECTION E-E

GUARDRAIL ANCHOR ASSEMBLY DETAILS

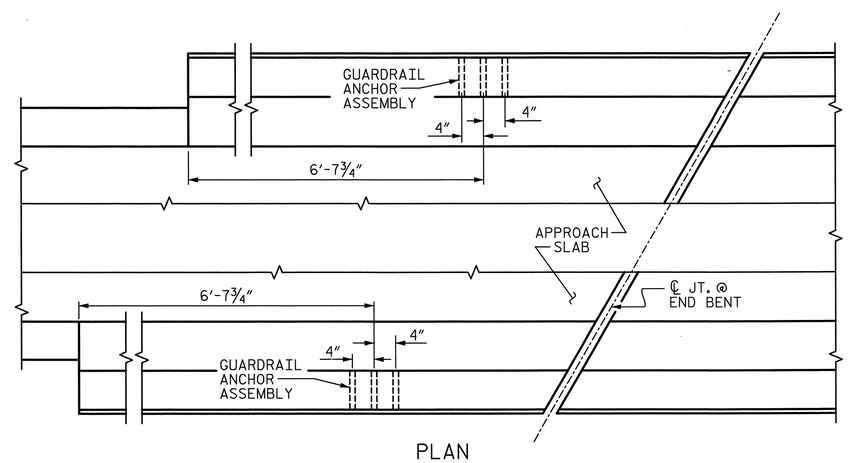

PLAN

LOCATION OF ANCHORS FOR GUARDRAIL

END BENT 1 SHOWN, END BENT 2 SIMILAR

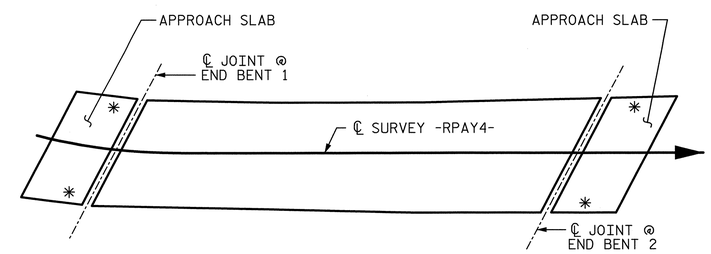

SKETCH SHOWING POINTS OF ATTACHMENTS

✱ DENOTES GUARDRAIL ANCHOR ASSEMBLY

PROJECT NO. U-2524C

GUILFORD COUNTY

STATION: 9+53.33 -RPAY4-

STATE OF NORTH CAROLINA
DEPARTMENT OF TRANSPORTATION
RALEIGH
SUPERSTRUCTURE

GUARDRAIL ANCHORAGE FOR BARRIER RAIL

-RAMP A-

REVISIONS						SHEET NO.
NO.	BY:	DATE:	NO.	BY:	DATE:	S-724
1			3			TOTAL SHEETS
2			4			836

PLANS PREPARED BY:

SIMPSON ENGINEERS & ASSOCIATES
5640 Dillard Drive
Suite 200
Cary, NC 27518
(919) 852-0468
(919) 852-0598 (Fax)
www.simpsonengr.com
LICENSURE NO. C-2521

NORTH CAROLINA PROFESSIONAL SEAL 023906 ENGINEER MARK A. AVERETTE
6-5-2013

DRAWN BY:	R. SEALEY	DATE:	4-13
CHECKED BY:	M. AVERETTE	DATE:	4-13
DESIGN ENGINEER OF RECORD:	M. AVERETTE	DATE:	4-13

6/5/2013 3:47:05 PM G:\Projects\2011\U-2524 (Guilford Co)\Structures\Ramp A\Drawings\Final\U-2524_sd_rpa_gr.dgn

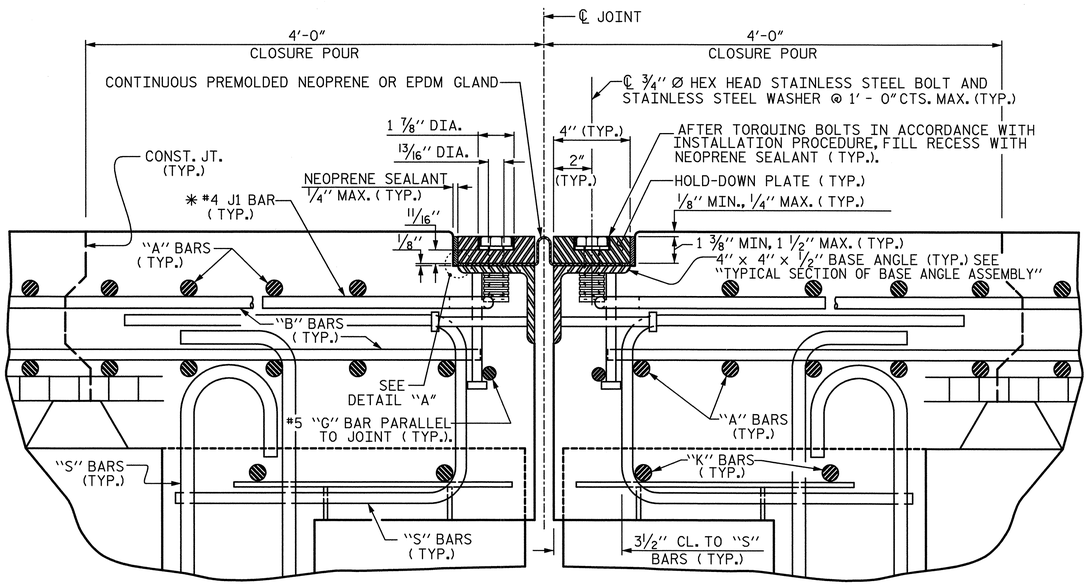

EXPANSION JOINT DETAILS

SECTION NORMAL TO JOINT -- PRESTRESSED GIRDER SUPERSTRUCTURE
(JOINT @ INTERIOR BENT SHOWN, JOINTS @ END BENTS SIMILAR)

✱ THE QUANTITY OF #4 J1 BARS ON THE BILL OF MATERIAL IS BASED ON 1'-0" CENTERS. J1 BARS SHALL BE PLACED AT EACH VERTICAL STUD ANCHOR BOLT. IN THE EVENT THAT THE NUMBER OF VERTICAL STUD ANCHORS EXCEEDS THE NUMBER OF J1 BARS SPECIFIED, ADDITIONAL J1 BARS WILL NOT BE REQUIRED.

INSTALLATION PROCEDURE:

1. A TEMPLATE OR OTHER SUITABLE DEVICE SHALL BE USED TO FORM THE TOP OF THE EXPANSION JOINT SEAL BLOCKOUT TO THE PROPER DEPTH AND WIDTH. THE TEMPLATE SHALL BE 4⅛" TO 4¼" WIDE AND OF SUCH THICKNESS AS TO PROVIDE FOR CORRECT FINAL ELEVATION OF TOP OF HOLD-DOWN PLATES. THE TEMPLATE SHALL BE ATTACHED TO THE BASE ANGLE ASSEMBLY WITH THE ¾" Ø HEX HEAD BOLTS PROVIDED FOR THE HOLD-DOWN PLATES. A 1" Ø HOLE SHALL BE PROVIDED IN THE TEMPLATE CENTERED OVER EACH WEEP HOLE IN THE 4" X 4" X ½" BASE ANGLE. OTHER METHODS OF INSURING DRAINAGE THROUGH WEEP HOLES MAY BE EMPLOYED SUBJECT TO ENGINEER'S APPROVAL.
2. AFTER THE CONCRETE HAS BEEN CAST ON BOTH SIDES OF THE JOINT, REMOVE THE TEMPLATE. THOROUGHLY CLEAN THE BOLT HOLES AND THE ANGLE PLATE. REMOVE ANY EXCESS CONCRETE THAT COMES OUT OF THE WEEP HOLES. ANY DAMAGED STEEL SHALL BE COATED WITH A MINIMUM THICKNESS OF 4 DRY MILS OF ZINC-RICH PAINT IN ACCORDANCE WITH THE STANDARD SPECIFICATIONS.
3. LAY THE GLAND ON THE BASE ANGLE AND FIELD MARK THE GLAND FOR THE BOLT HOLES. HOLES IN THE GLAND SHALL BE PUNCHED ⅞" IN DIAMETER WITH A HAND PUNCH.
4. IN ORDER TO CHECK FOR PROPER ALIGNMENT, PLACE THE GLAND AND HOLD-DOWN PLATES ON THE BASE ANGLE. DO NOT APPLY NEOPRENE SEALANT. BOLT THE HOLD-DOWN PLATES TO THE BASE ANGLE BUT DO NOT TIGHTEN. THE ENGINEER SHALL INSPECT THE JOINT SEAL DEVICE FOR PROPER ALIGNMENT.
5. AFTER INSPECTION, REMOVE THE HOLD-DOWN PLATES AND GLAND. APPLY NEOPRENE SEALANT TO THE BASE ANGLE IN ACCORDANCE WITH THE "INSTALLATION SKETCH". PLACE GLAND AND HOLD-DOWN PLATES ON THE BASE ANGLE. BOLT THE HOLD-DOWN PLATES TO THE BASE ANGLE ASSEMBLY AND TORQUE THE BOLTS TO 88 FT-LBS WITH A TORQUE WRENCH. CHECK THE TORQUE AFTER THREE (3) HOURS AND, IF NECESSARY, RETIGHTEN TO 88 FT-LBS. A FINAL CHECK SHALL BE MADE AT SEVEN (7) DAYS. TORQUE SHALL NOT BE LESS THAN 80 FT-LBS AFTER SEVEN (7) DAYS.
6. AFTER PROPER TORQUING, CLEAN THE BOLT HOLE RECESSES AND THE RECESS BETWEEN THE JOINT SEAL DEVICE AND CONCRETE, COMPLETELY FILL THESE RECESSES WITH NEOPRENE SEALANT.

NOTES:

1. FOR EXPANSION JOINT SEALS, SEE SPECIAL PROVISIONS.
2. ALL PLATES AND ANGLES SHALL CONFORM TO AASHTO M270 GRADE 36 STEEL OR APPROVED EQUAL. ALL HOLD-DOWN BOLTS SHALL CONFORM TO ASTM F593 ALLOY 304 STAINLESS STEEL AND WASHERS SHALL CONFORM TO ASTM F844 EXCEPT THEY SHALL BE MADE FROM ALLOY 304 STAINLESS STEEL. ALL STUD ANCHORS SHALL CONFORM TO AASHTO M169, GRADES 1010 THRU 1020 OR APPROVED EQUAL. ALL CONCRETE INSERTS SHALL BE CLOSED END AND SHALL CONFORM TO AASHTO M169, GRADE 12L14. TENSILE CAPACITY SHALL BE 3000 LBS. MIN.
3. A PREMOLDED CORRUGATED OR NON-CORRUGATED GLAND SHALL BE USED FOR JOINTS SKEWED BETWEEN 50° THRU 130°. FOR JOINTS SKEWED LESS THAN 50° OR MORE THAN 130°, ONLY A CORRUGATED GLAND SHALL BE USED.
4. CLOSED END FERRULES AND STUD ANCHORS SHALL BE SHOP WELDED AND ALL HOLES SHALL BE SHOP DRILLED AS SHOWN ON PLANS. STUD ANCHORS SHALL BE ELECTRIC ARC END WELDED WITH COMPLETE FUSION.
5. SURFACES COMING IN CONTACT WITH NEOPRENE SHALL BE GROUND SMOOTH PRIOR TO METALLIZING.
6. UPON COMPLETION OF SHOP FABRICATION, THE HOLD DOWN PLATE AND BASE ANGLE ASSEMBLY, AS SHOWN IN THE "TYPICAL SECTION OF BASE ANGLE ASSEMBLY", SHALL BE METALLIZED. SEE SPECIAL PROVISION FOR THERMAL SPRAYED COATINGS (METALLIZATION).
7. BASE ANGLE ASSEMBLY SHALL BE CONTINUOUS FOR THE LENGTH OF THE JOINT. AT CROWN BREAKS, THE ENDS OF THE BASE ANGLE ASSEMBLY SHALL BE CUT PARALLEL TO THE BRIDGE CENTERLINE FOR SKEWS LESS THAN 80° AND GREATER THAN 100°. FINISHED WELD SHALL BE GROUND SMOOTH AND COATED WITH A MINIMUM THICKNESS OF 4 DRY MILS OF ZINC-RICH PAINT IN ACCORDANCE WITH THE STANDARD SPECIFICATIONS.
8. FIELD SPLICES OF HOLD-DOWN PLATES SHALL BE KEPT TO A MINIMUM. CONTRACTOR SHALL FURNISH DETAILED PLANS SHOWING PROPOSED SPLICE LOCATIONS FOR APPROVAL. HOLD-DOWN PLATES SHALL NOT EXCEED 20' LENGTHS UNLESS APPROVED BY THE ENGINEER.
9. NO ALTERNATE JOINT DETAILS SHALL BE PERMITTED IN LIEU OF THOSE SHOWN ON THESE PLANS.
10. THE CONTRACTOR MAY, AT HIS OPTION, USE ADHESIVELY ANCHORED ANCHOR BOLTS IN PLACE OF CONCRETE INSERTS FOR COVER PLATES. THE YIELD LOAD OF THE ¾" Ø BOLT IS 10 KIPS. FIELD TESTING OF THE ADHESIVE BONDING SYSTEM IS NOT REQUIRED.

MOVEMENT AND SETTING AT JOINT

BENT NO.	SKEW ANGLE	TOTAL MOVEMENT (ALONG ℄ RDWY)	PERPENDICULAR JOINT OPENING AT 45° F	PERPENDICULAR JOINT OPENING AT 60° F	PERPENDICULAR JOINT OPENING AT 90° F
END BT. 1	116°-37'-57"	1¼"	1 11/16"	1½"	1 3/16"
BENT 3	117°-47'-57"	2½"	2⅜"	2"	1 5/16"
BENT 6	117°-47'-57"	2½"	2⅜"	2"	1 5/16"
END BT. 2	117°-47'-57"	1 5/16"	1 11/16"	1½"	1 3/16"

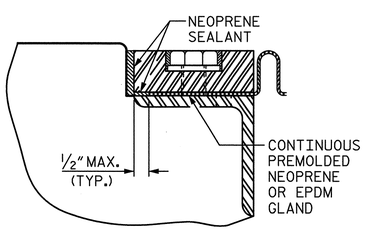

"DETAIL A"

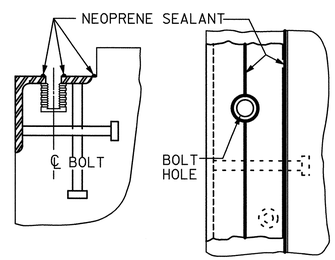

CROSS SECTION PLAN VIEW

INSTALLATION SKETCH

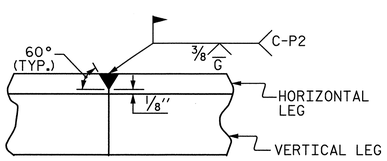

DETAIL- FIELD WELD SPLICE OF BASE ANGLE

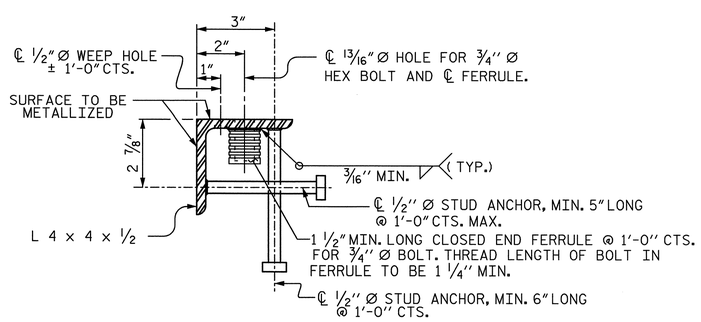

TYPICAL SECTION OF BASE ANGLE ASSEMBLY

PROJECT NO. U-2524C
GUILFORD COUNTY
STATION: 9+53.33 -RPAY4-

SHEET 1 OF 3

STATE OF NORTH CAROLINA
DEPARTMENT OF TRANSPORTATION
RALEIGH
SUPERSTRUCTURE

EXPANSION JOINT SEAL DETAILS

-RAMP A-

PLANS PREPARED BY:
SIMPSON ENGINEERS & ASSOCIATES
5640 Dillard Drive
Suite 200
Cary, NC 27518
(919) 852-0468
(919) 852-0598 (Fax)
www.simpsonengr.com
LICENSURE NO. C-2521

NORTH CAROLINA PROFESSIONAL SEAL 023908 ENGINEER MARK A. AVERETTE
6-5-2013

REVISIONS						
NO.	BY:	DATE:	NO.	BY:	DATE:	
1			3			
2			4			

SHEET NO. S-725
TOTAL SHEETS 836

DRAWN BY: R. SEALEY DATE: 4-13
CHECKED BY: M. AVERETTE DATE: 4-13
DESIGN ENGINEER OF RECORD: M. AVERETTE DATE: 4-13

6/5/2013 3:47:11 PM G:\Projects\2011\U-2524 (Guilford Co)\Structures\Ramp A\Drawings\Final\U-2524_sd_rpa_JS.dgn

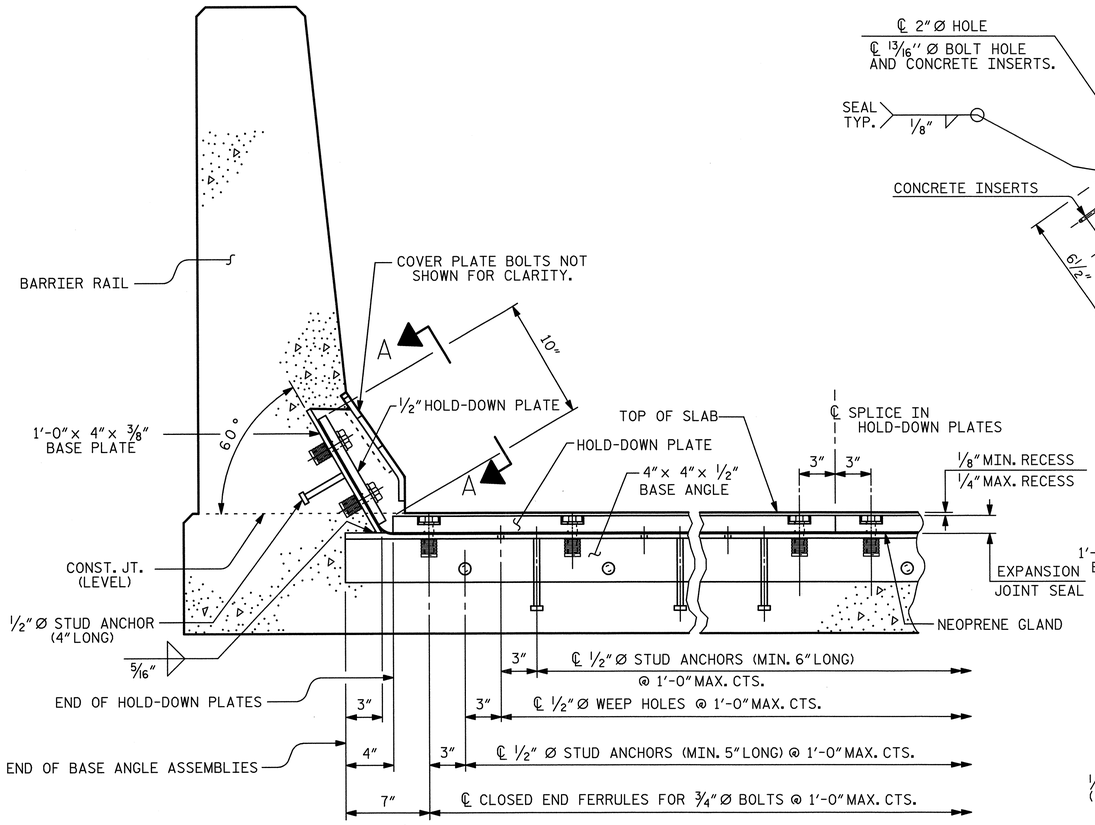

SECTION THRU RAIL NORMAL TO JOINT

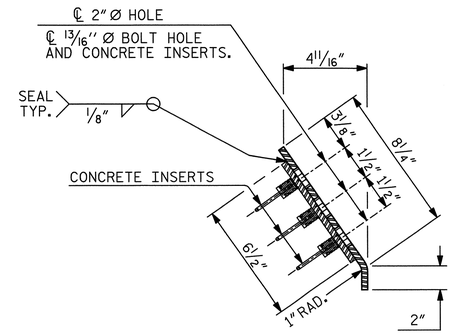

END VIEW

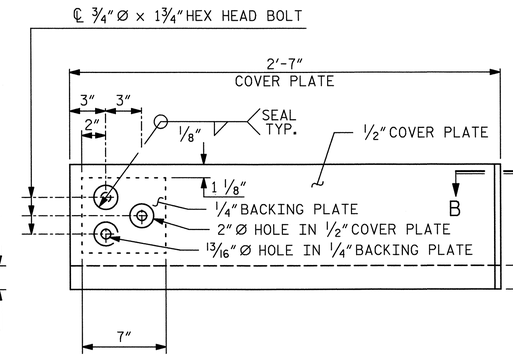

TYPE I - ELEVATION VIEW

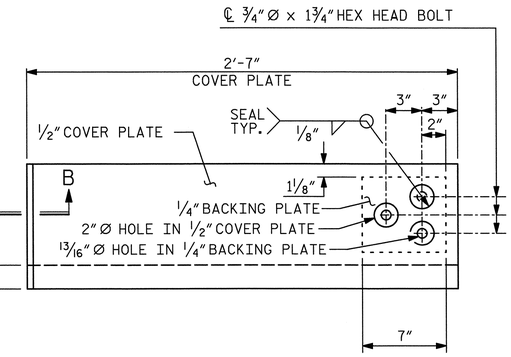

TYPE II - ELEVATION VIEW

BEND ALONG THIS LINE

COVER PLATE DETAILS

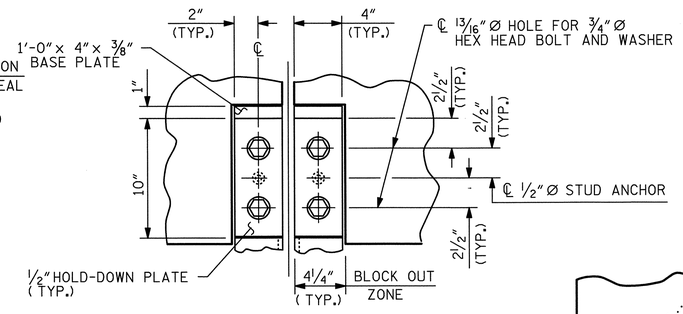

SECTION A-A

NOTE: FOR PAVEMENT MARKING ALIGNMENT, SEE SHEET 3 OF 3.

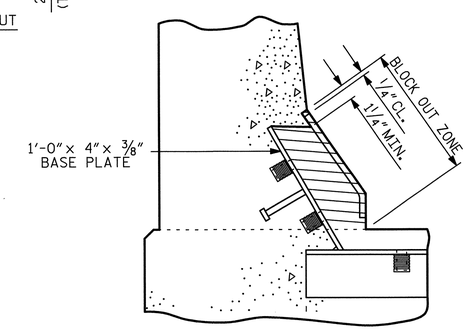

BLOCK OUT DETAIL

SEE " SECTION A - A " FOR OTHER DETAILS.

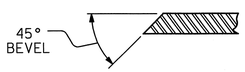

SECTION B-B

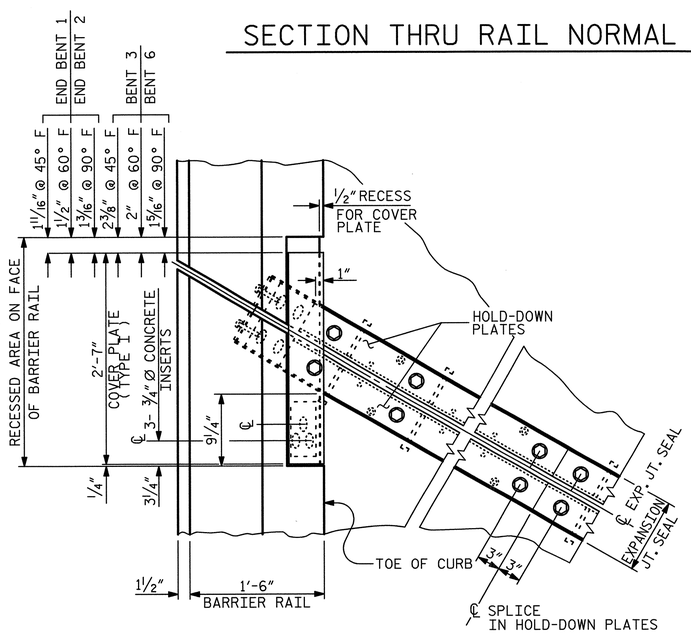

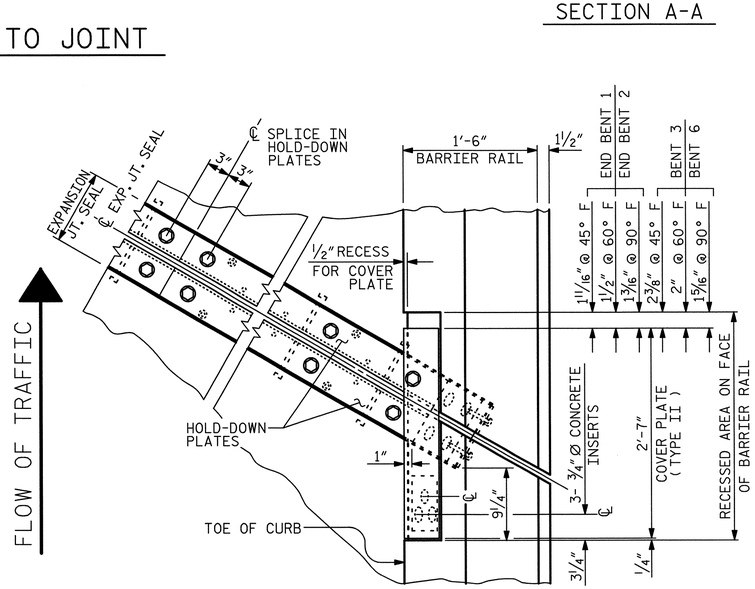

PLAN OF EXPANSION JOINT SEAL

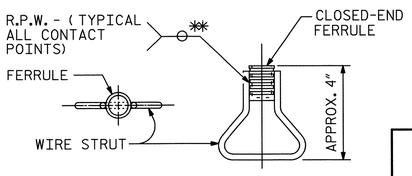

PLAN ELEVATION

CONCRETE INSERT

** EACH WELDED ATTACHMENT OF WIRE TO FERRULE SHALL DEVELOP THE TENSILE STRENGTH OF THE WIRE.

PLANS PREPARED BY:

SIMPSON ENGINEERS & ASSOCIATES
5640 Dillard Drive
Suite 200
Cary, NC 27518
(919) 852-0468
(919) 852-0598 (Fax)
www.simpsonengr.com
LICENSURE NO. C2521

NORTH CAROLINA PROFESSIONAL SEAL 023906 ENGINEER MARK A. AVERETTE
6-5-2013

PROJECT NO. U-2524C

GUILFORD COUNTY

STATION: 9+53.33 -RPAY4-

SHEET 2 OF 3

STATE OF NORTH CAROLINA
DEPARTMENT OF TRANSPORTATION
RALEIGH

SUPERSTRUCTURE

EXPANSION JOINT SEAL DETAILS FOR BARRIER RAIL

-RAMP A-

REVISIONS						SHEET NO.
NO.	BY:	DATE:	NO.	BY:	DATE:	S-726
1			3			TOTAL SHEETS
2			4			836

DRAWN BY:	R. SEALEY	DATE:	4-13
CHECKED BY:	M. AVERETTE	DATE:	4-13
DESIGN ENGINEER OF RECORD:	M. AVERETTE	DATE:	4-13

6/5/2013 3:47:16 PM G:\Projects\2011\U-2524 (Guilford Co)\Structures\Ramp A\Drawings\Final\U-2524_sd_rpa_JS.dgn

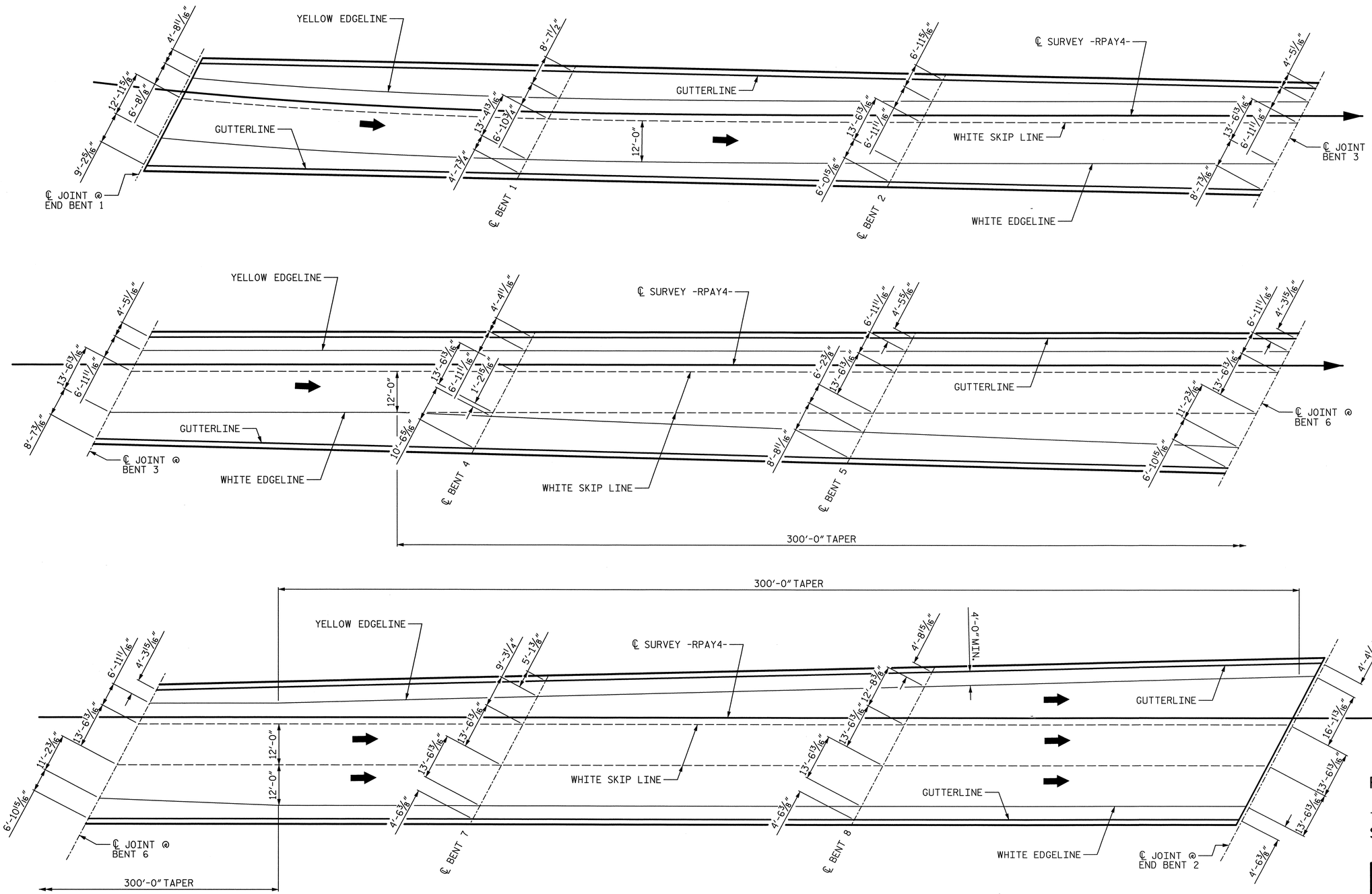

NOTE:

PAVEMENT MARKINGS SHOWN ON THE PLANS ARE FROM THE BEST INFORMATION AVAILABLE. PRIOR TO BEGINNING BRIDGE CONSTRUCTION, VERIFY THE PAVEMENT MARKINGS WITH THE CURRENT AND FUTURE PAVEMENT MARKING PLANS. REPORT ANY VARIATIONS TO THE ENGINEER. ANY PLAN REVISIONS NECESSARY TO THE PAVEMENT MARKING ALIGNMENTS WILL BE PROVIDED BY THE DEPARTMENT.

PAVEMENT MARKING ALIGNMENT

PROJECT NO. U-2524C

GUILFORD COUNTY

STATION: 9+53.33 -RPAY4-

SHEET 3 OF 3

STATE OF NORTH CAROLINA
DEPARTMENT OF TRANSPORTATION
RALEIGH
SUPERSTRUCTURE

PAVEMENT MARKING ALIGNMENT

-RAMP A-

PLANS PREPARED BY:
SIMPSON ENGINEERS & ASSOCIATES
5640 Dillard Drive
Suite 200
Cary, NC 27518
(919) 852-0468
(919) 852-0598 (Fax)
www.simpsonengr.com
LICENSURE NO. C-2521

NORTH CAROLINA PROFESSIONAL SEAL 023906 ENGINEER MARK A. AVERETTE
6-5-2013

REVISIONS								SHEET NO.
NO.	BY:	DATE:	NO.	BY:	DATE:			S-727
1			3					TOTAL SHEETS
2			4					830

DRAWN BY: R. SEALEY DATE: 4-13
CHECKED BY: M. AVERETTE DATE: 4-13
DESIGN ENGINEER OF RECORD: M. AVERETTE DATE: 4-13

6/5/2013 3:47:22 PM G:\Projects\2011\U-2524 (Guilford Co)\Structures\Ramp A\Drawings\Final\U-2524_sd_rpa_JS.dgn

REINFORCING BAR SCHEDULE FOR 3 SPAN CONTINUOUS UNIT 1
(SPANS 1, 2, 3)

BAR	NO.	SIZE	TYPE	LENGTH	WEIGHT	BAR	NO.	SIZE	TYPE	LENGTH	WEIGHT
1-A1E	534	5	STR	32'-11"	18333	1-A216	2	5	STR	19'-0"	40
1-A2	534	5	STR	32'-11"	18333	1-A217	2	5	STR	20'-2"	42
						1-A218	2	5	STR	21'-4"	45
1-A101E	2	5	STR	1'-7"	3	1-A219	2	5	STR	22'-6"	47
1-A102E	2	5	STR	2'-9"	6	1-A220	2	5	STR	23'-8"	49
1-A103E	2	5	STR	3'-11"	8	1-A221	2	5	STR	24'-10"	52
1-A104E	2	5	STR	5'-1"	11	1-A222	2	5	STR	26'-0"	54
1-A105E	2	5	STR	6'-3"	13	1-A223	2	5	STR	27'-2"	57
1-A106E	2	5	STR	7'-5"	15	1-A224	2	5	STR	28'-4"	59
1-A107E	2	5	STR	8'-7"	18	1-A225	2	5	STR	29'-6"	62
1-A108E	2	5	STR	9'-9"	20	1-A226	2	5	STR	30'-8"	64
1-A109E	2	5	STR	10'-11"	23	1-A227	2	5	STR	31'-10"	66
1-A110E	2	5	STR	12'-1"	25						
1-A111E	2	5	STR	13'-3"	28	1-B1E	138	4	STR	26'-3"	2420
1-A112E	2	5	STR	14'-5"	30	1-B2E	138	7	STR	30'-2"	8509
1-A113E	2	5	STR	15'-7"	33	1-B3E	44	7	STR	36'-0"	3238
1-A114E	2	5	STR	16'-9"	35	1-B4E	46	4	STR	20'-8"	635
1-A115E	2	5	STR	17'-10"	37	1-B5	234	5	STR	56'-5"	13769
1-A116E	2	5	STR	19'-0"	40						
1-A117E	2	5	STR	20'-2"	42	1-G1E	2	5	STR	36'-8"	76
1-A118E	2	5	STR	21'-4"	45						
1-A119E	2	5	STR	22'-6"	47	1-J1E	74	4	11	1'-5"	70
1-A120E	2	5	STR	23'-8"	49						
1-A121E	2	5	STR	24'-10"	52	1-K1E	18	6	STR	4'-6"	122
1-A122E	2	5	STR	26'-0"	54	1-K2E	12	6	7	9'-0"	162
1-A123E	2	5	STR	27'-2"	57	1-K3E	8	8	1	12'-11"	276
1-A124E	2	5	STR	28'-4"	59	1-K4E	8	8	2	15'-9"	336
1-A125E	2	5	STR	29'-6"	62	1-K5	60	4	STR	7'-8"	307
1-A126E	2	5	STR	30'-8"	64	1-K6	12	4	STR	4'-9"	38
1-A127E	2	5	STR	31'-10"	66	1-K7	12	4	STR	4'-4"	35
1-A201	2	5	STR	1'-7"	3	1-S1E	30	4	3	5'-7"	112
1-A202	2	5	STR	2'-9"	6	1-S2E	30	5	4	5'-11"	185
1-A203	2	5	STR	3'-11"	8	1-S3	216	4	6	3'-4"	481
1-A204	2	5	STR	5'-1"	11						
1-A205	2	5	STR	6'-3"	13	1-U1	12	4	5	11'-8"	94
1-A206	2	5	STR	7'-5"	15	1-U2	30	4	8	18'-7"	372
1-A207	2	5	STR	8'-7"	18						
1-A208	2	5	STR	9'-9"	20	1-Z1	28	4	9	6'-1"	114
1-A209	2	5	STR	10'-11"	23	1-Z2	28	4	10	11'-11"	223
1-A210	2	5	STR	12'-1"	25						
1-A211	2	5	STR	13'-3"	28						
1-A212	2	5	STR	14'-5"	30						
1-A213	2	5	STR	15'-7"	33						
1-A214	2	5	STR	16'-9"	35						
1-A215	2	5	STR	17'-10"	37						

REINFORCING STEEL	34708	LB
EPOXY COATED REINFORCING STEEL	35416	LB
CLASS "AA" CONCRETE		
POUR 1	105.8	CY
POUR 2	133.1	CY
POUR 3	141.8	CY
POUR 4	10.4	CY

"E" INDICATES EPOXY COATED REINFORCING STEEL

BAR TYPES

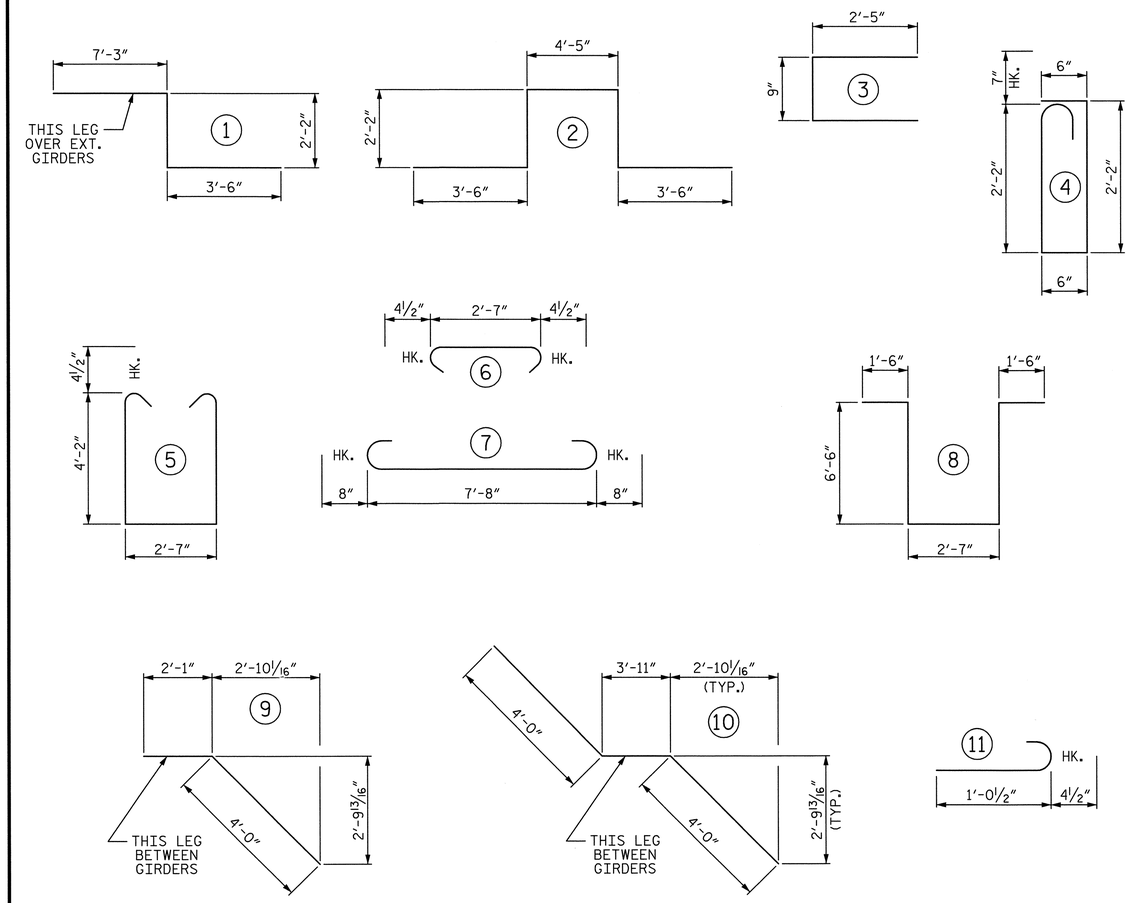

ALL BAR DIMENSIONS ARE OUT TO OUT

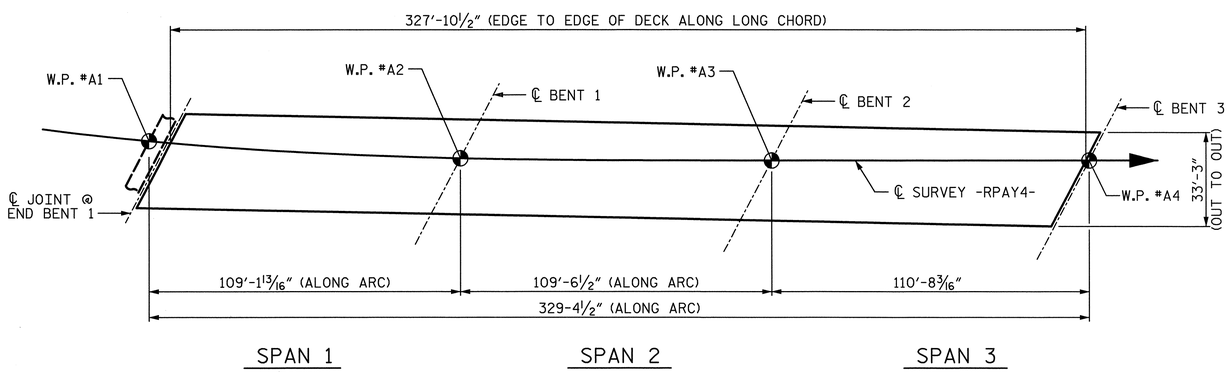

LAYOUT FOR COMPUTING AREA OF REINFORCED CONCRETE DECK SLAB FOR 3 SPAN CONTINUOUS UNIT 1
(SQ. FT. = 10,903)

SUPERSTRUCTURE REINFORCING STEEL LENGTHS ARE BASED ON THE FOLLOWING MINIMUM SPLICE LENGTHS

BAR SIZE	SUPERSTRUCTURE EXCEPT APPROACH SLABS, PARAPET, AND BARRIER RAIL		APPROACH SLABS		PARAPET AND BARRIER RAIL
	EPOXY COATED	UNCOATED	EPOXY COATED	UNCOATED	
#4	2'-0"	1'-9"	2'-0"	1'-9"	2'-9"
#5	2'-6"	2'-2"	2'-6"	2'-2"	3'-5"
#6	3'-0"	2'-7"	3'-10"	2'-7"	4'-4"
#7	5'-3"	3'-6"			
#8	6'-10"	4'-7"			

GROOVING BRIDGE FLOORS

APPROACH SLABS	669	SQ. FT.
BRIDGE DECK	8826	SQ. FT.
TOTAL	9495	SQ. FT.

PROJECT NO. U-2524C
GUILFORD COUNTY
STATION: 9+53.33 -RPAY4-

SHEET 1 OF 5

STATE OF NORTH CAROLINA
DEPARTMENT OF TRANSPORTATION
RALEIGH
SUPERSTRUCTURE

BILL OF MATERIAL
(3 SPAN CONTINUOUS UNIT 1)
(SPANS 1, 2, & 3)

-RAMP A-

REVISIONS						SHEET NO.
NO.	BY:	DATE:	NO.	BY:	DATE:	S-728
1			3			TOTAL SHEETS
2			4			836

PLANS PREPARED BY:
SIMPSON ENGINEERS & ASSOCIATES
5640 Dillard Drive
Suite 200
Cary, NC 27518
(919) 852-0468
(919) 852-0598 (Fax)
www.simpsonengr.com
LICENSURE NO. C-2521

NORTH CAROLINA PROFESSIONAL SEAL 023906 ENGINEER MARK A. AVERETTE
6-5-2013

DRAWN BY:	R. SEALEY	DATE:	4-13
CHECKED BY:	M. AVERETTE	DATE:	4-13
DESIGN ENGINEER OF RECORD:	M. AVERETTE	DATE:	4-13

6/5/2013 3:47:28 PM G:\Projects\2011\U-2524 (Guilford Co)\Structures\Ramp A\Drawings\Final\U-2524_sd_rpa_bm.dgn

REINFORCING BAR SCHEDULE FOR 3 SPAN CONTINUOUS UNIT 2
(SPANS 4, 5, 6)

BAR	NO.	SIZE	TYPE	LENGTH	WEIGHT
2-A1E	20	5	STR	33'-0"	688
2-A2E	20	5	STR	33'-4"	695
2-A3E	20	5	STR	33'-7"	701
2-A4E	20	5	STR	33'-11"	708
2-A5E	20	5	STR	34'-2"	713
2-A6E	20	5	STR	34'-6"	720
2-A7E	20	5	STR	34'-9"	725
2-A8E	20	5	STR	35'-1"	732
2-A9E	20	5	STR	35'-4"	737
2-A10E	20	5	STR	35'-8"	744
2-A11E	20	5	STR	35'-11"	749
2-A12E	20	5	STR	36'-3"	756
2-A13E	20	5	STR	36'-6"	761
2-A14E	20	5	STR	36'-10"	768
2-A15E	20	5	STR	37'-1"	774
2-A16E	20	5	STR	37'-5"	781
2-A17E	20	5	STR	37'-8"	786
2-A18E	20	5	STR	38'-0"	793
2-A19E	20	5	STR	38'-3"	798
2-A20E	20	5	STR	38'-7"	805
2-A21E	20	5	STR	38'-10"	810
2-A22E	20	5	STR	39'-2"	817
2-A23E	20	5	STR	39'-5"	822
2-A24E	20	5	STR	39'-9"	829
2-A25E	20	5	STR	40'-0"	834
2-A26E	20	5	STR	40'-4"	841
2-A27E	20	5	STR	40'-7"	847
2-A28	20	5	STR	33'-0"	688
2-A29	20	5	STR	33'-4"	695
2-A30	20	5	STR	33'-7"	701
2-A31	20	5	STR	33'-11"	708
2-A32	20	5	STR	34'-2"	713
2-A33	20	5	STR	34'-6"	720
2-A34	20	5	STR	34'-9"	725
2-A35	20	5	STR	35'-1"	732
2-A36	20	5	STR	35'-4"	737
2-A37	20	5	STR	35'-8"	744
2-A38	20	5	STR	35'-11"	749
2-A39	20	5	STR	36'-3"	756
2-A40	20	5	STR	36'-6"	761
2-A41	20	5	STR	36'-10"	768
2-A42	20	5	STR	37'-1"	774
2-A43	20	5	STR	37'-5"	781
2-A44	20	5	STR	37'-8"	786
2-A45	20	5	STR	38'-0"	793
2-A46	20	5	STR	38'-3"	798
2-A47	20	5	STR	38'-7"	805
2-A48	20	5	STR	38'-10"	810
2-A49	20	5	STR	39'-2"	817
2-A50	20	5	STR	39'-5"	822

BAR	NO.	SIZE	TYPE	LENGTH	WEIGHT
2-A51	20	5	STR	39'-9"	829
2-A52	20	5	STR	40'-0"	834
2-A53	20	5	STR	40'-4"	841
2-A54	20	5	STR	40'-7"	847
2-A101E	1	5	STR	1'-4"	1
2-A102E	1	5	STR	2'-0"	2
2-A103E	1	5	STR	3'-1"	3
2-A104E	1	5	STR	4'-2"	4
2-A105E	1	5	STR	5'-4"	6
2-A106E	1	5	STR	6'-5"	7
2-A107E	1	5	STR	7'-6"	8
2-A108E	1	5	STR	8'-7"	9
2-A109E	1	5	STR	9'-8"	10
2-A110E	1	5	STR	11'-0"	11
2-A111E	1	5	STR	12'-1"	13
2-A112E	1	5	STR	13'-2"	14
2-A113E	1	5	STR	14'-3"	15
2-A114E	1	5	STR	15'-5"	16
2-A115E	1	5	STR	16'-6"	17
2-A116E	1	5	STR	17'-7"	18
2-A117E	1	5	STR	18'-8"	19
2-A118E	1	5	STR	19'-9"	21
2-A119E	1	5	STR	21'-1"	22
2-A120E	1	5	STR	22'-2"	23
2-A121E	1	5	STR	23'-3"	24
2-A122E	1	5	STR	24'-4"	25
2-A123E	1	5	STR	25'-5"	27
2-A124E	1	5	STR	26'-7"	28
2-A125E	1	5	STR	27'-8"	29
2-A126E	1	5	STR	28'-9"	30
2-A127E	1	5	STR	30'-0"	31
2-A128E	1	5	STR	31'-1"	32
2-A129E	1	5	STR	32'-3"	34
2-A201	1	5	STR	1'-4"	1
2-A202	1	5	STR	2'-0"	2
2-A203	1	5	STR	3'-1"	3
2-A204	1	5	STR	4'-2"	4
2-A205	1	5	STR	5'-4"	6
2-A206	1	5	STR	6'-5"	7
2-A207	1	5	STR	7'-6"	8
2-A208	1	5	STR	8'-7"	9
2-A209	1	5	STR	9'-8"	10
2-A210	1	5	STR	11'-0"	11
2-A211	1	5	STR	12'-1"	13
2-A212	1	5	STR	13'-2"	14
2-A213	1	5	STR	14'-3"	15
2-A214	1	5	STR	15'-5"	16
2-A215	1	5	STR	16'-6"	17

BAR	NO.	SIZE	TYPE	LENGTH	WEIGHT
2-A216	1	5	STR	17'-7"	18
2-A217	1	5	STR	18'-8"	19
2-A218	1	5	STR	19'-9"	21
2-A219	1	5	STR	21'-1"	22
2-A220	1	5	STR	22'-2"	23
2-A221	1	5	STR	23'-3"	24
2-A222	1	5	STR	24'-4"	25
2-A223	1	5	STR	25'-5"	27
2-A224	1	5	STR	26'-7"	28
2-A225	1	5	STR	27'-8"	29
2-A226	1	5	STR	28'-9"	30
2-A227	1	5	STR	30'-0"	31
2-A228	1	5	STR	31'-1"	32
2-A229	1	5	STR	32'-3"	34
2-A301E	1	5	STR	40'-2"	42
2-A302E	1	5	STR	39'-1"	41
2-A303E	1	5	STR	37'-9"	39
2-A304E	1	5	STR	36'-8"	38
2-A305E	1	5	STR	35'-7"	37
2-A306E	1	5	STR	34'-6"	36
2-A307E	1	5	STR	33'-5"	35
2-A308E	1	5	STR	32'-4"	34
2-A309E	1	5	STR	31'-3"	33
2-A310E	1	5	STR	30'-2"	31
2-A311E	1	5	STR	29'-1"	30
2-A312E	1	5	STR	28'-0"	29
2-A313E	1	5	STR	26'-9"	28
2-A314E	1	5	STR	25'-8"	27
2-A315E	1	5	STR	24'-7"	26
2-A316E	1	5	STR	23'-6"	25
2-A317E	1	5	STR	22'-5"	23
2-A318E	1	5	STR	21'-3"	22
2-A319E	1	5	STR	20'-2"	21
2-A320E	1	5	STR	19'-1"	20
2-A321E	1	5	STR	18'-0"	19
2-A322E	1	5	STR	16'-9"	17
2-A323E	1	5	STR	15'-8"	16
2-A324E	1	5	STR	14'-7"	15
2-A325E	1	5	STR	13'-6"	14
2-A326E	1	5	STR	12'-5"	13
2-A327E	1	5	STR	11'-4"	12
2-A328E	1	5	STR	10'-3"	11
2-A329E	1	5	STR	9'-2"	10
2-A330E	1	5	STR	8'-1"	8
2-A331E	1	5	STR	7'-0"	7
2-A332E	1	5	STR	5'-9"	6
2-A333E	1	5	STR	4'-8"	5
2-A334E	1	5	STR	3'-6"	4
2-A335E	1	5	STR	2'-5"	3

BAR	NO.	SIZE	TYPE	LENGTH	WEIGHT
2-A336E	1	5	STR	1'-4"	1
2-A401	1	5	STR	40'-2"	42
2-A402	1	5	STR	39'-1"	41
2-A403	1	5	STR	37'-9"	39
2-A404	1	5	STR	36'-8"	38
2-A405	1	5	STR	35'-7"	37
2-A406	1	5	STR	34'-6"	36
2-A407	1	5	STR	33'-5"	35
2-A408	1	5	STR	32'-4"	34
2-A409	1	5	STR	31'-3"	33
2-A410	1	5	STR	30'-2"	31
2-A411	1	5	STR	29'-1"	30
2-A412	1	5	STR	28'-0"	29
2-A413	1	5	STR	26'-9"	28
2-A414	1	5	STR	25'-8"	27
2-A415	1	5	STR	24'-7"	26
2-A416	1	5	STR	23'-6"	25
2-A417	1	5	STR	22'-5"	23
2-A418	1	5	STR	21'-3"	22
2-A419	1	5	STR	20'-2"	21
2-A420	1	5	STR	19'-1"	20
2-A421	1	5	STR	18'-0"	19
2-A422	1	5	STR	16'-9"	17
2-A423	1	5	STR	15'-8"	16
2-A424	1	5	STR	14'-7"	15
2-A425	1	5	STR	13'-6"	14
2-A426	1	5	STR	12'-5"	13
2-A427	1	5	STR	11'-4"	12
2-A428	1	5	STR	10'-3"	11
2-A429	1	5	STR	9'-2"	10
2-A430	1	5	STR	8'-1"	8
2-A431	1	5	STR	7'-0"	7
2-A432	1	5	STR	5'-9"	6
2-A433	1	5	STR	4'-8"	5
2-A434	1	5	STR	3'-6"	4
2-A435	1	5	STR	2'-5"	3
2-A436	1	5	STR	1'-4"	1
2-B1E	174	4	STR	27'-3"	3167
2-B2E	174	7	STR	30'-2"	10729
2-B3E	56	7	STR	36'-0"	4121
2-B4E	58	4	STR	22'-2"	859
2-B5	288	5	STR	57'-11"	17397
2-G1E	1	5	STR	36'-8"	38
2-G2E	1	5	STR	46'-1"	48
2-J1E	84	4	11	1'-5"	79

BAR	NO.	SIZE	TYPE	LENGTH	WEIGHT
2-K1E	9	6	STR	4'-6"	61
2-K2E	6	6	7	9'-0"	81
2-K3E	4	8	1	13'-2"	141
2-K4E	4	8	2	16'-3"	174
2-K5	30	4	STR	8'-8"	174
2-K6	6	4	STR	5'-9"	23
2-K7	6	4	STR	5'-4"	21
2-K8	30	4	STR	9'-9"	195
2-K9	6	4	STR	6'-9"	27
2-K10	6	4	STR	6'-4"	25
2-K11E	9	6	STR	7'-6"	101
2-K12E	6	6	7	12'-1"	109
2-K13E	4	8	1	14'-8"	157
2-K14E	4	8	2	19'-3"	206
2-S1E	48	4	3	5'-7"	179
2-S2E	48	5	4	5'-11"	296
2-S3	288	4	6	3'-4"	641
2-U1	12	4	5	11'-8"	94
2-U2	42	4	8	18'-7"	521
2-Z1	14	4	9	6'-6"	61
2-Z2	14	4	10	12'-9"	119
2-Z3	14	4	9	7'-0"	65
2-Z4	14	4	10	13'-9"	129

REINFORCING STEEL	41503	LB
EPOXY COATED REINFORCING STEEL	42557	LB
CLASS "AA" CONCRETE		
POUR 1	109.8	CY
POUR 2	149.9	CY
POUR 3	170.3	CY
POUR 4	12.0	CY

"E" INDICATES EPOXY COATED REINFORCING STEEL

SUPERSTRUCTURE REINFORCING STEEL LENGTHS ARE BASED ON THE FOLLOWING MINIMUM SPLICE LENGTHS

BAR SIZE	SUPERSTRUCTURE EXCEPT APPROACH SLABS, PARAPET, AND BARRIER RAIL		APPROACH SLABS		PARAPET AND BARRIER RAIL
	EPOXY COATED	UNCOATED	EPOXY COATED	UNCOATED	
#4	2'-0"	1'-9"	2'-0"	1'-9"	2'-9"
#5	2'-6"	2'-2"	2'-6"	2'-2"	3'-5"
#6	3'-0"	2'-7"	3'-10"	2'-7"	4'-4"
#7	5'-3"	3'-6"			
#8	6'-10"	4'-7"			

PROJECT NO. U-2524C

GUILFORD COUNTY

STATION: 9+53.33 -RPAY4-

SHEET 2 OF 5

STATE OF NORTH CAROLINA
DEPARTMENT OF TRANSPORTATION
RALEIGH

SUPERSTRUCTURE

BILL OF MATERIAL
(3 SPAN CONTINUOUS UNIT 2)
(SPANS 4, 5, & 6)

-RAMP A-

PLANS PREPARED BY:
SIMPSON ENGINEERS & ASSOCIATES
5640 Dillard Drive
Suite 200
Cary, NC 27518
(919) 852-0468
(919) 852-0598 (Fax)
www.simpsonengr.com
LICENSURE NO. C-2521

NORTH CAROLINA PROFESSIONAL SEAL 023906 ENGINEER MARK A. AVERETTE
6-5-2013

REVISIONS						SHEET NO.
NO.	BY:	DATE:	NO.	BY:	DATE:	S-729
1			3			TOTAL SHEETS
2			4			836

DRAWN BY: R. SEALEY DATE: 4-13
CHECKED BY: M. AVERETTE DATE: 4-13
DESIGN ENGINEER OF RECORD: M. AVERETTE DATE: 4-13

6/5/2013 3:47:33 PM G:\Projects\2011\U-2524 (Guilford Co)\Structures\Ramp A\Drawings\Final\U-2524_sd_rpa_bm.dgn

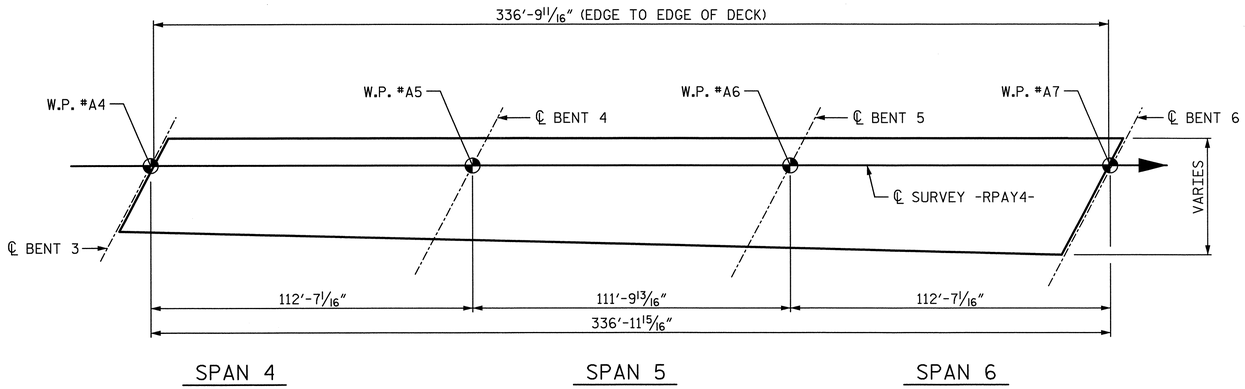

LAYOUT FOR COMPUTING AREA OF REINFORCED CONCRETE DECK SLAB FOR 3 SPAN CONTINUOUS UNIT 2

(SQ. FT. = 12,488)

GROOVING BRIDGE FLOORS		
BRIDGE DECK	10367	SQ. FT.

BAR TYPES

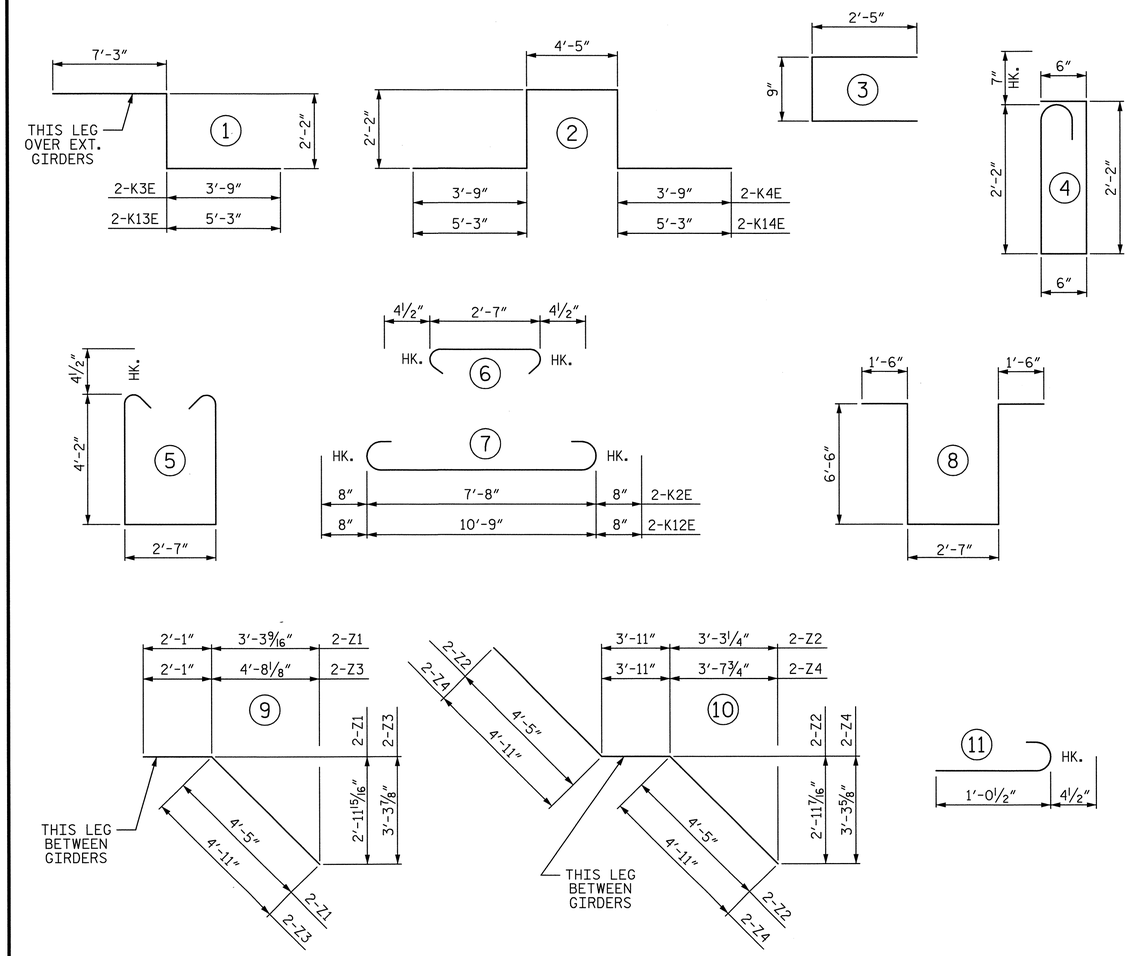

ALL BAR DIMENSIONS ARE OUT TO OUT

PROJECT NO. U-2524C

GUILFORD COUNTY

STATION: 9+53.33 -RPAY4-

SHEET 3 OF 5

STATE OF NORTH CAROLINA
DEPARTMENT OF TRANSPORTATION
RALEIGH

SUPERSTRUCTURE

BILL OF MATERIAL

(3 SPAN CONTINUOUS UNIT 2)
(SPANS 4, 5, & 6)
-RAMP A-

PLANS PREPARED BY:

SIMPSON ENGINEERS & ASSOCIATES
5640 Dillard Drive
Suite 200
Cary, NC 27518
(919) 852-0468
(919) 852-0598 (Fax)
www.simpsonengr.com
LICENSURE NO. C-2521

NORTH CAROLINA PROFESSIONAL SEAL 023906 ENGINEER MARK A. AVERETTE
6-5-2013

REVISIONS							SHEET NO.
NO.	BY:	DATE:	NO.	BY:	DATE:		S-730
1			3				TOTAL SHEETS
2			4				836

DRAWN BY:	R. SEALEY	DATE:	4-13
CHECKED BY:	M. AVERETTE	DATE:	4-13
DESIGN ENGINEER OF RECORD:	M. AVERETTE	DATE:	4-13

6/5/2013 3:47:38 PM G:\Projects\2011\U-2524 (Guilford Co)\Structures\Ramp A\Drawings\Final\U-2524_sd_rpa_bm.dgn

REINFORCING BAR SCHEDULE FOR 3 SPAN CONTINUOUS UNIT 3
(SPANS 7, 8, & 9)

BAR	NO.	SIZE	TYPE	LENGTH	WEIGHT
3-A1E	20	5	STR	40'-11"	854
3-A2E	20	5	STR	41'-2"	859
3-A3E	20	5	STR	41'-6"	866
3-A4E	20	5	STR	41'-9"	871
3-A5E	20	5	STR	42'-0"	876
3-A6E	20	5	STR	42'-4"	883
3-A7E	20	5	STR	42'-7"	888
3-A8E	20	5	STR	42'-10"	894
3-A9E	20	5	STR	43'-2"	900
3-A10E	20	5	STR	43'-5"	906
3-A11E	20	5	STR	43'-8"	911
3-A12E	20	5	STR	44'-0"	918
3-A13E	20	5	STR	44'-3"	923
3-A14E	20	5	STR	44'-6"	928
3-A15E	20	5	STR	44'-10"	935
3-A16E	20	5	STR	45'-1"	940
3-A17E	20	5	STR	45'-4"	946
3-A18E	20	5	STR	45'-8"	953
3-A19E	20	5	STR	45'-11"	958
3-A20E	20	5	STR	46'-2"	963
3-A21E	20	5	STR	46'-6"	970
3-A22E	20	5	STR	46'-9"	975
3-A23E	20	5	STR	47'-0"	980
3-A24E	20	5	STR	47'-4"	987
3-A25E	20	5	STR	47'-7"	993
3-A26E	20	5	STR	47'-10"	998
3-A27E	20	5	STR	48'-2"	1005
3-A28	20	5	STR	40'-11"	854
3-A29	20	5	STR	41'-2"	859
3-A30	20	5	STR	41'-6"	866
3-A31	20	5	STR	41'-9"	871
3-A32	20	5	STR	42'-0"	876
3-A33	20	5	STR	42'-4"	883
3-A34	20	5	STR	42'-7"	888
3-A35	20	5	STR	42'-10"	894
3-A36	20	5	STR	43'-2"	900
3-A37	20	5	STR	43'-5"	906
3-A38	20	5	STR	43'-8"	911
3-A39	20	5	STR	44'-0"	918
3-A40	20	5	STR	44'-3"	923
3-A41	20	5	STR	44'-6"	928
3-A42	20	5	STR	44'-10"	935
3-A43	20	5	STR	45'-1"	940
3-A44	20	5	STR	45'-4"	946
3-A45	20	5	STR	45'-8"	953
3-A46	20	5	STR	45'-11"	958
3-A47	20	5	STR	46'-2"	963
3-A48	20	5	STR	46'-6"	970
3-A49	20	5	STR	46'-9"	975
3-A50	20	5	STR	47'-0"	980

BAR	NO.	SIZE	TYPE	LENGTH	WEIGHT
3-A51	20	5	STR	47'-4"	987
3-A52	20	5	STR	47'-7"	993
3-A53	20	5	STR	47'-10"	998
3-A54	20	5	STR	48'-2"	1005
3-A101E	1	5	STR	1'-7"	2
3-A102E	1	5	STR	2'-8"	3
3-A103E	1	5	STR	3'-9"	4
3-A104E	1	5	STR	4'-11"	5
3-A105E	1	5	STR	6'-0"	6
3-A106E	1	5	STR	7'-1"	7
3-A107E	1	5	STR	8'-3"	9
3-A108E	1	5	STR	9'-4"	10
3-A109E	1	5	STR	10'-5"	11
3-A110E	1	5	STR	11'-6"	12
3-A111E	1	5	STR	12'-8"	13
3-A112E	1	5	STR	13'-9"	14
3-A113E	1	5	STR	14'-10"	15
3-A114E	1	5	STR	15'-11"	17
3-A115E	1	5	STR	17'-1"	18
3-A116E	1	5	STR	18'-2"	19
3-A117E	1	5	STR	19'-3"	20
3-A118E	1	5	STR	20'-5"	21
3-A119E	1	5	STR	21'-6"	22
3-A120E	1	5	STR	22'-7"	24
3-A121E	1	5	STR	23'-8"	25
3-A122E	1	5	STR	24'-10"	26
3-A123E	1	5	STR	25'-11"	27
3-A124E	1	5	STR	27'-0"	28
3-A125E	1	5	STR	28'-2"	29
3-A126E	1	5	STR	29'-3"	31
3-A127E	1	5	STR	30'-4"	32
3-A128E	1	5	STR	31'-5"	33
3-A129E	1	5	STR	32'-7"	34
3-A130E	1	5	STR	33'-8"	35
3-A131E	1	5	STR	34'-9"	36
3-A132E	1	5	STR	35'-10"	37
3-A133E	1	5	STR	37'-0"	39
3-A134E	1	5	STR	38'-1"	40
3-A135E	1	5	STR	39'-2"	41
3-A136E	1	5	STR	40'-4"	42
3-A137E	1	5	STR	40'-11"	43
3-A201	1	5	STR	1'-7"	2
3-A202	1	5	STR	2'-8"	3
3-A203	1	5	STR	3'-9"	4
3-A204	1	5	STR	4'-11"	5
3-A205	1	5	STR	6'-0"	6
3-A206	1	5	STR	7'-1"	7
3-A207	1	5	STR	8'-3"	9

BAR	NO.	SIZE	TYPE	LENGTH	WEIGHT
3-A208	1	5	STR	9'-4"	10
3-A209	1	5	STR	10'-5"	11
3-A210	1	5	STR	11'-6"	12
3-A211	1	5	STR	12'-8"	13
3-A212	1	5	STR	13'-9"	14
3-A213	1	5	STR	14'-10"	15
3-A214	1	5	STR	15'-11"	17
3-A215	1	5	STR	17'-1"	18
3-A216	1	5	STR	18'-2"	19
3-A217	1	5	STR	19'-3"	20
3-A218	1	5	STR	20'-5"	21
3-A219	1	5	STR	21'-6"	22
3-A220	1	5	STR	22'-7"	24
3-A221	1	5	STR	23'-8"	25
3-A222	1	5	STR	24'-10"	26
3-A223	1	5	STR	25'-11"	27
3-A224	1	5	STR	27'-0"	28
3-A225	1	5	STR	28'-2"	29
3-A226	1	5	STR	29'-3"	31
3-A227	1	5	STR	30'-4"	32
3-A228	1	5	STR	31'-5"	33
3-A229	1	5	STR	32'-7"	34
3-A230	1	5	STR	33'-8"	35
3-A231	1	5	STR	34'-9"	36
3-A232	1	5	STR	35'-10"	37
3-A233	1	5	STR	37'-0"	39
3-A234	1	5	STR	38'-1"	40
3-A235	1	5	STR	39'-2"	41
3-A236	1	5	STR	40'-4"	42
3-A237	1	5	STR	40'-11"	43
3-A301E	1	5	STR	48'-2"	50
3-A302E	1	5	STR	47'-10"	50
3-A303E	1	5	STR	46'-9"	49
3-A304E	1	5	STR	45'-8"	48
3-A305E	1	5	STR	44'-7"	47
3-A306E	1	5	STR	43'-6"	45
3-A307E	1	5	STR	42'-4"	44
3-A308E	1	5	STR	41'-3"	43
3-A309E	1	5	STR	40'-2"	42
3-A310E	1	5	STR	39'-1"	41
3-A311E	1	5	STR	38'-0"	40
3-A312E	1	5	STR	36'-11"	39
3-A313E	1	5	STR	35'-10"	37
3-A314E	1	5	STR	34'-9"	36
3-A315E	1	5	STR	33'-8"	35
3-A316E	1	5	STR	32'-7"	34
3-A317E	1	5	STR	31'-5"	33
3-A318E	1	5	STR	30'-4"	32
3-A319E	1	5	STR	29'-3"	31

BAR	NO.	SIZE	TYPE	LENGTH	WEIGHT
3-A320E	1	5	STR	28'-2"	29
3-A321E	1	5	STR	27'-1"	28
3-A322E	1	5	STR	26'-0"	27
3-A323E	1	5	STR	24'-11"	26
3-A324E	1	5	STR	23'-10"	25
3-A325E	1	5	STR	22'-9"	24
3-A326E	1	5	STR	21'-7"	23
3-A327E	1	5	STR	20'-7"	21
3-A328E	1	5	STR	19'-5"	20
3-A329E	1	5	STR	18'-4"	19
3-A330E	1	5	STR	17'-3"	18
3-A331E	1	5	STR	16'-2"	17
3-A332E	1	5	STR	15'-1"	16
3-A333E	1	5	STR	14'-0"	15
3-A334E	1	5	STR	12'-11"	13
3-A335E	1	5	STR	11'-9"	12
3-A336E	1	5	STR	10'-8"	11
3-A337E	1	5	STR	9'-7"	10
3-A338E	1	5	STR	8'-6"	9
3-A339E	1	5	STR	7'-5"	8
3-A340E	1	5	STR	6'-4"	7
3-A341E	1	5	STR	5'-3"	5
3-A342E	1	5	STR	4'-2"	4
3-A343E	1	5	STR	3'-1"	3
3-A344E	1	5	STR	1'-11"	2
3-A401	1	5	STR	48'-2"	50
3-A402	1	5	STR	47'-10"	50
3-A403	1	5	STR	46'-9"	49
3-A404	1	5	STR	45'-8"	48
3-A405	1	5	STR	44'-7"	47
3-A406	1	5	STR	43'-6"	45
3-A407	1	5	STR	42'-4"	44
3-A408	1	5	STR	41'-3"	43
3-A409	1	5	STR	40'-2"	42
3-A410	1	5	STR	39'-1"	41
3-A411	1	5	STR	38'-0"	40
3-A412	1	5	STR	36'-11"	39
3-A413	1	5	STR	35'-10"	37
3-A414	1	5	STR	34'-9"	36
3-A415	1	5	STR	33'-8"	35
3-A416	1	5	STR	32'-7"	34
3-A417	1	5	STR	31'-5"	33
3-A418	1	5	STR	30'-4"	32
3-A419	1	5	STR	29'-3"	31
3-A420	1	5	STR	28'-2"	29
3-A421	1	5	STR	27'-1"	28
3-A422	1	5	STR	26'-0"	27
3-A423	1	5	STR	24'-11"	26
3-A424	1	5	STR	23'-10"	25

BAR	NO.	SIZE	TYPE	LENGTH	WEIGHT
3-A425	1	5	STR	22'-9"	24
3-A426	1	5	STR	21'-7"	23
3-A427	1	5	STR	20'-7"	21
3-A428	1	5	STR	19'-5"	20
3-A429	1	5	STR	18'-4"	19
3-A430	1	5	STR	17'-3"	18
3-A431	1	5	STR	16'-2"	17
3-A432	1	5	STR	15'-1"	16
3-A433	1	5	STR	14'-0"	15
3-A434	1	5	STR	12'-11"	13
3-A435	1	5	STR	11'-9"	12
3-A436	1	5	STR	10'-8"	11
3-A437	1	5	STR	9'-7"	10
3-A438	1	5	STR	8'-6"	9
3-A439	1	5	STR	7'-5"	8
3-A440	1	5	STR	6'-4"	7
3-A441	1	5	STR	5'-3"	5
3-A442	1	5	STR	4'-2"	4
3-A443	1	5	STR	3'-1"	3
3-A444	1	5	STR	1'-11"	2
3-B1E	204	4	STR	27'-10"	3793
3-B2E	204	7	STR	30'-2"	12579
3-B3E	66	7	STR	36'-0"	4857
3-B4E	68	4	STR	23'-1"	1049
3-B5	360	5	STR	58'-10"	22091
3-G1E	1	5	STR	46'-2"	48
3-G2E	1	5	STR	55'-5"	58
3-J1E	103	4	11	1'-5"	97
3-K1E	12	6	STR	4'-7"	83
3-K2E	8	6	7	9'-2"	110
3-K3E	4	8	1	13'-2"	141
3-K4E	6	8	2	16'-3"	260
3-K5	40	4	STR	8'-6"	227
3-K6	8	4	STR	5'-6"	29
3-K7	8	4	STR	5'-1"	27
3-K8	40	4	STR	9'-4"	249
3-K9	8	4	STR	6'-3"	33
3-K10	8	4	STR	5'-11"	32
3-K11E	12	6	STR	6'-9"	122
3-K12E	8	6	7	11'-5"	137
3-K13E	4	8	1	14'-4"	153
3-K14E	6	8	2	18'-7"	298
3-S1E	64	4	3	5'-7"	239
3-S2E	64	5	4	5'-11"	395
3-S3	384	4	6	3'-4"	855

BAR	NO.	SIZE	TYPE	LENGTH	WEIGHT
3-U1	16	4	5	11'-8"	125
3-U2	56	4	8	18'-7"	695
3-Z1	14	4	9	6'-6"	61
3-Z2	21	4	10	12'-9"	179
3-Z3	14	4	9	6'-10"	64
3-Z4	21	4	10	13'-5"	188

REINFORCING STEEL	51103	LB
EPOXY COATED REINFORCING STEEL	52327	LB
CLASS "AA" CONCRETE		
POUR 1	135.7	CY
POUR 2	184.1	CY
POUR 3	206.3	CY
POUR 4	14.8	CY

"E" INDICATES EPOXY COATED REINFORCING STEEL

SUPERSTRUCTURE REINFORCING STEEL LENGTHS ARE BASED ON THE FOLLOWING MINIMUM SPLICE LENGTHS

BAR SIZE	SUPERSTRUCTURE EXCEPT APPROACH SLABS, PARAPET, AND BARRIER RAIL		APPROACH SLABS		PARAPET AND BARRIER RAIL
	EPOXY COATED	UNCOATED	EPOXY COATED	UNCOATED	
#4	2'-0"	1'-9"	2'-0"	1'-9"	2'-9"
#5	2'-6"	2'-2"	2'-6"	2'-2"	3'-5"
#6	3'-0"	2'-7"	3'-10"	2'-7"	4'-4"
#7	5'-3"	3'-6"			
#8	6'-10"	4'-7"			

PROJECT NO. U-2524C

GUILFORD COUNTY

STATION: 9+53.33 -RPAY4-

SHEET 4 OF 5

STATE OF NORTH CAROLINA
DEPARTMENT OF TRANSPORTATION
RALEIGH

SUPERSTRUCTURE

BILL OF MATERIAL
(3 SPAN CONTINUOUS UNIT 3)
(SPANS 7, 8, & 9)

-RAMP A-

PLANS PREPARED BY:

SIMPSON ENGINEERS & ASSOCIATES
5640 Dillard Drive
Suite 200
Cary, NC 27518
(919) 852-0468
(919) 852-0598 (Fax)
www.simpsonengr.com
LICENSURE NO. C-2521

NORTH CAROLINA PROFESSIONAL SEAL 023906 ENGINEER MARK A. AVERETTE
6-5-2013

REVISIONS						SHEET NO.
NO.	BY:	DATE:	NO.	BY:	DATE:	S-731
1			3			TOTAL SHEETS
2			4			836

DRAWN BY: R. SEALEY DATE: 4-13
CHECKED BY: M. AVERETTE DATE: 4-13
DESIGN ENGINEER OF RECORD: M. AVERETTE DATE: 4-13

6/5/2013 3:47:44 PM G:\Projects\2011\U-2524 (Guilford Co)\Structures\Ramp A\Drawings\Final\U-2524_sd_rpa_bm.dgn

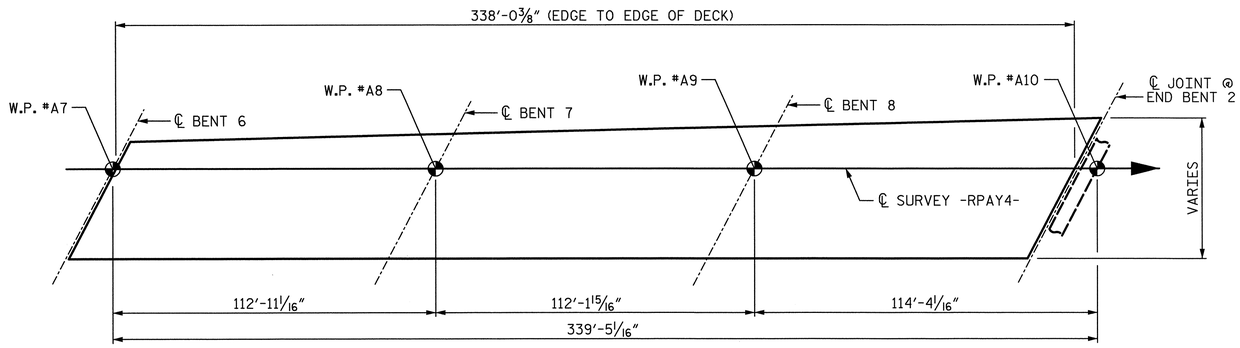

LAYOUT FOR COMPUTING AREA OF REINFORCED CONCRETE DECK SLAB FOR 3 SPAN CONTINUOUS UNIT 3

(SQ. FT. = 15,334)

GROOVING BRIDGE FLOORS		
APPROACH SLAB	1023	SQ. FT.
BRIDGE DECK	13167	SQ. FT.
TOTAL	14190	SQ. FT.

BAR TYPES

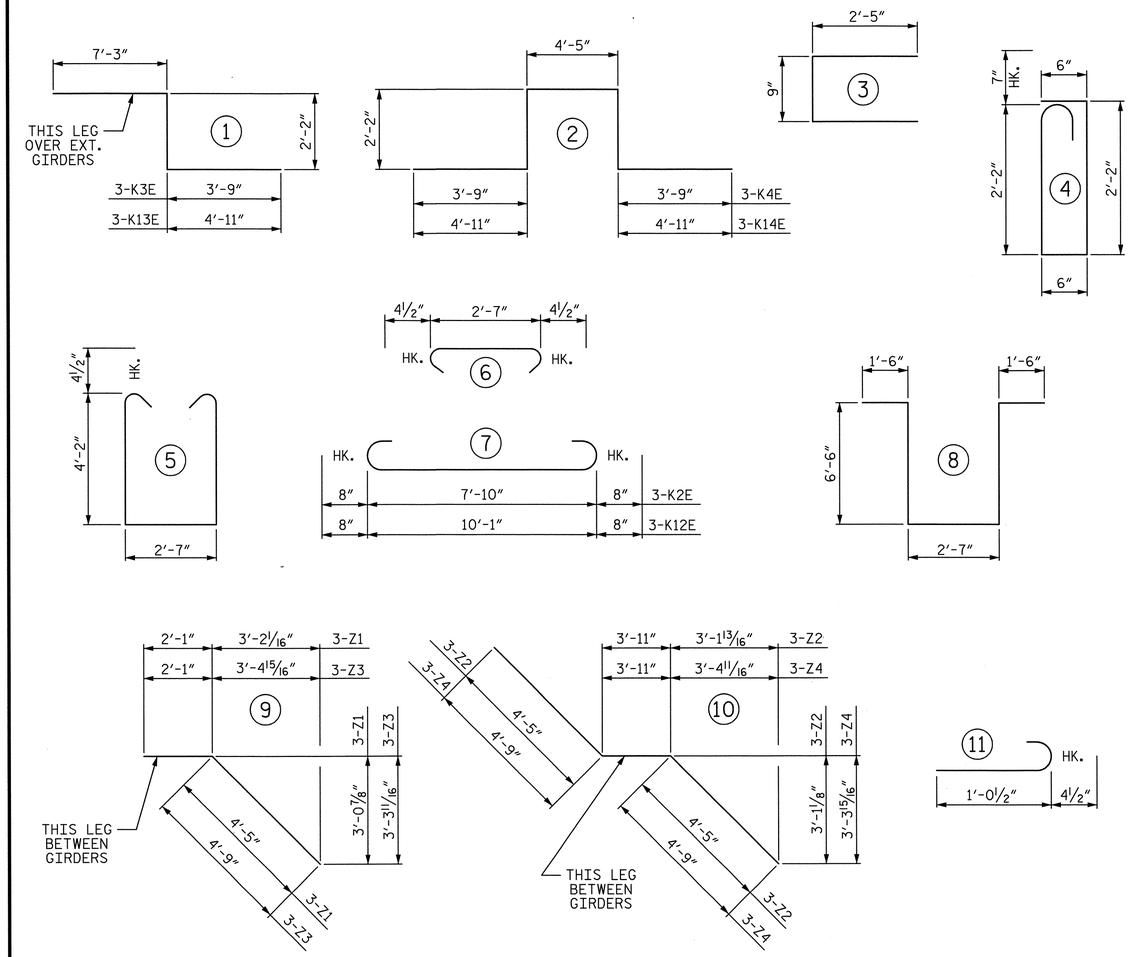

ALL BAR DIMENSIONS ARE OUT TO OUT

PROJECT NO. U-2524C

GUILFORD COUNTY

STATION: 9+53.33 -RPAY4-

SHEET 5 OF 5

STATE OF NORTH CAROLINA
DEPARTMENT OF TRANSPORTATION
RALEIGH

SUPERSTRUCTURE

BILL OF MATERIAL

(3 SPAN CONTINUOUS UNIT 3)
(SPANS 7, 8, & 9)

-RAMP A-

PLANS PREPARED BY:

SIMPSON ENGINEERS & ASSOCIATES
5640 Dillard Drive
Suite 200
Cary, NC 27518
(919) 852-0468
(919) 852-0598 (Fax)
www.simpsonengr.com
LICENSURE NO. C-2521

NORTH CAROLINA PROFESSIONAL ENGINEER SEAL 023906 MARK A. AVERETTE
6-5-2013

REVISIONS						SHEET NO.
NO.	BY:	DATE:	NO.	BY:	DATE:	S-732
1			3			TOTAL SHEETS
2			4			836

DRAWN BY: R. SEALEY DATE: 4-13
CHECKED BY: M. AVERETTE DATE: 4-13
DESIGN ENGINEER OF RECORD: M. AVERETTE DATE: 4-13

6/5/2013 3:47:48 PM G:\Projects\2011\U-2524 (Guilford Co)\Structures\Ramp A\Drawings\Final\U-2524_sd_rpa_bm.dgn

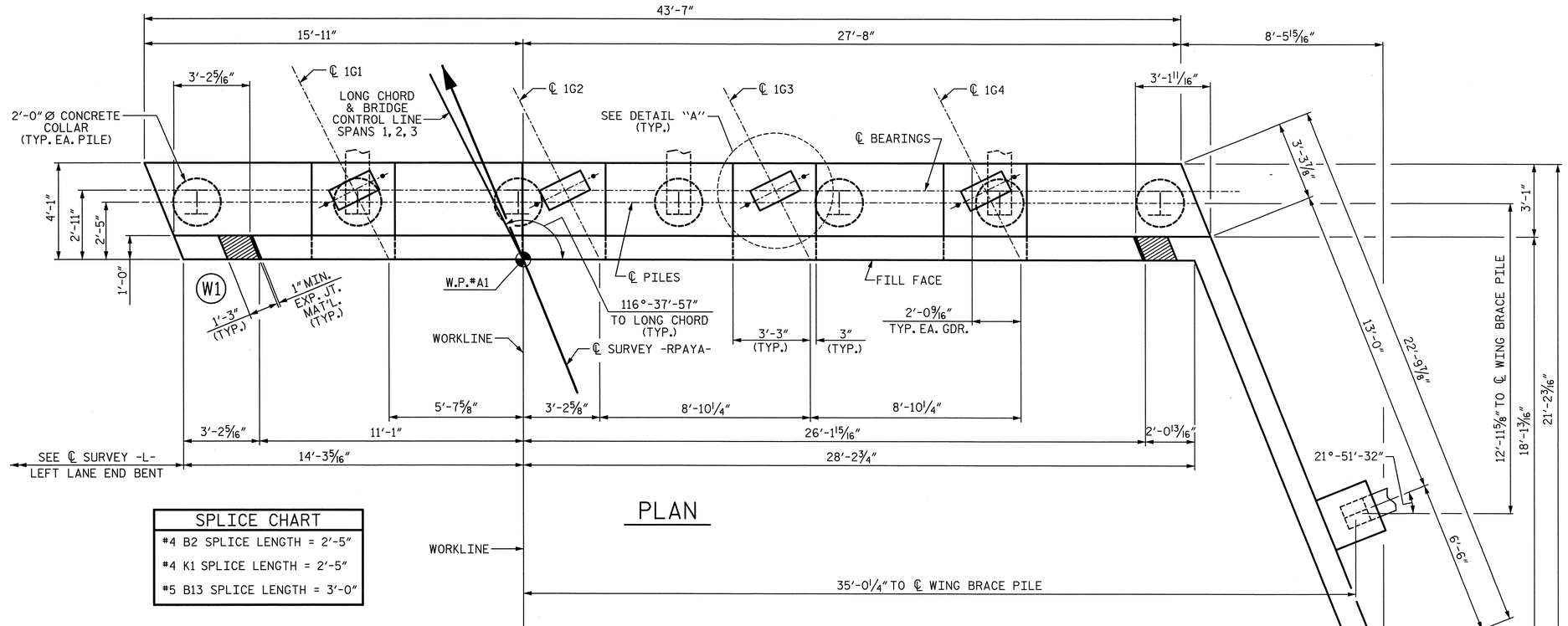

SPLICE CHART

#4 B2 SPLICE LENGTH = 2'-5"
#4 K1 SPLICE LENGTH = 2'-5"
#5 B13 SPLICE LENGTH = 3'-0"

PLAN

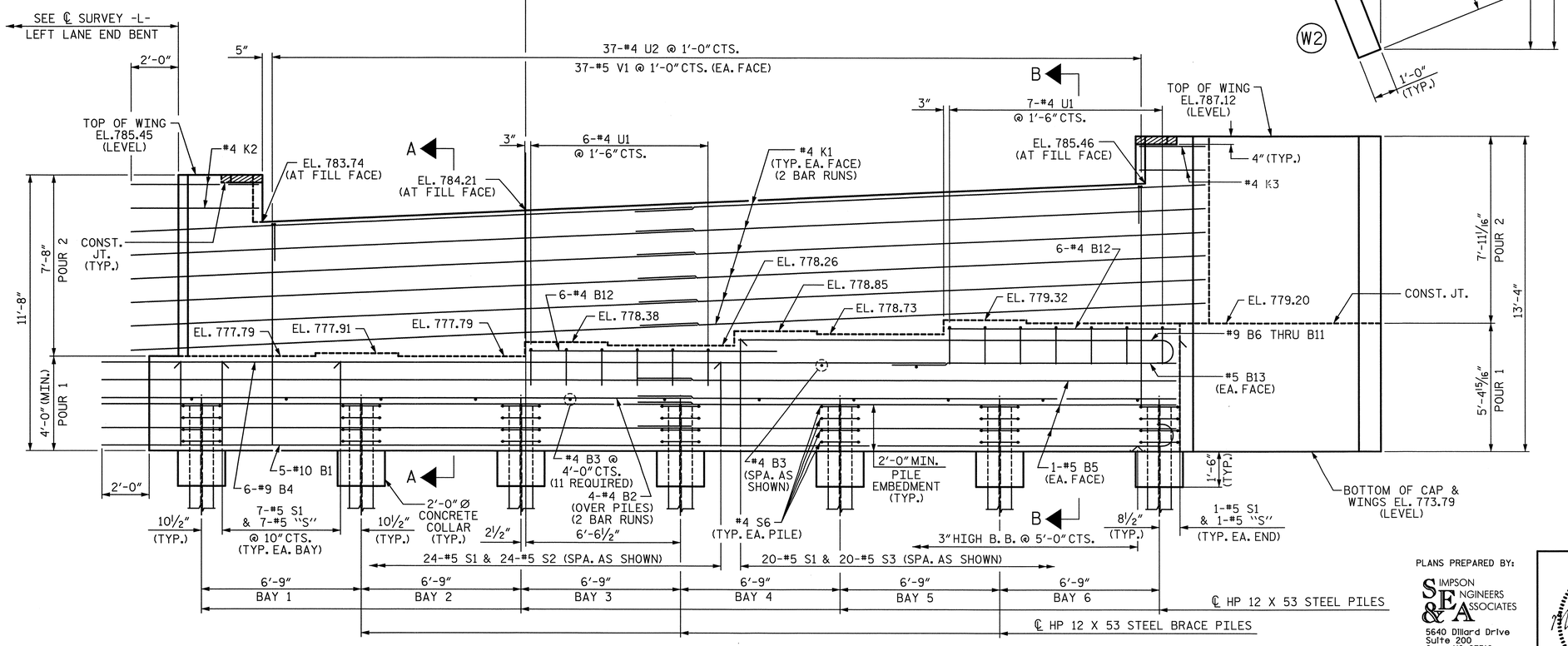

ELEVATION

FOR CLARITY, WING BRACE PILE NOT SHOWN

NOTES:

STIRRUPS AND "U" BARS IN CAP MAY BE SHIFTED AS NECESSARY TO CLEAR ANCHOR BOLTS.

BACKWALL SHALL BE PLACED BEFORE APPLYING THE EPOXY PROTECTIVE COATING.

THE CONCRETE IN THE SHADED AREA OF THE WING SHALL BE POURED AFTER THE BARRIER RAIL IS CAST IF SLIP FORMING IS USED.

THE TOP SURFACE AREAS OF THE END BENT CAPS SHALL BE CURED IN ACCORDANCE WITH THE STANDARD SPECIFICATIONS EXCEPT THE MEMBRANE CURING COMPOUND METHOD SHALL NOT BE USED.

THE TOP SURFACE OF THE CAP EXCEPT THE BRIDGE SEAT BUILDUPS SHALL BE SLOPED TRANSVERSELY FROM THE FILL FACE TO THE BACK FACE AT THE RATE OF 2%.

THE CONTRACTOR SHALL PROVIDE FOR INSTALLATION OF THE 4" DIAMETER DRAIN PIPE THROUGH THE WING WALL AS REQUIRED FOR REINFORCED BRIDGE APPROACH FILLS, SEE THE ROADWAY PLANS. REINFORCING STEEL IN THE WING WALL MAY BE SHIFTED AS NECESSARY TO CLEAR THE DRAIN PIPE.

SEE GENERAL DRAWING "FOUNDATION LAYOUT" FOR ADDITIONAL NOTES FOR DRIVING PILES.

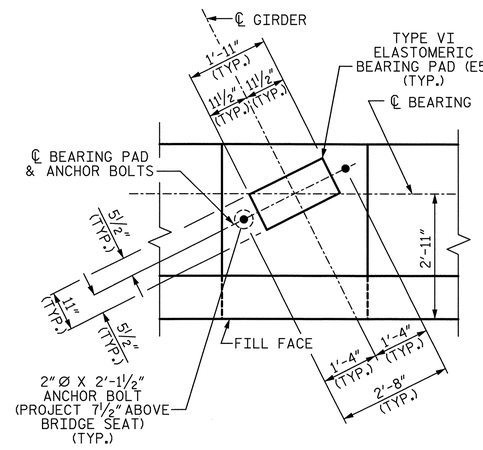

DETAIL "A"

TYP. EA. GIRDER

PROJECT NO. U-2524C

GUILFORD COUNTY

STATION: 9+53.33 -RPAY4-

SHEET 1 OF 3

STATE OF NORTH CAROLINA
DEPARTMENT OF TRANSPORTATION
RALEIGH

SUBSTRUCTURE

END BENT 1

-RAMP A-

REVISIONS							
NO.	BY:	DATE:	NO.	BY:	DATE:	SHEET NO.	S-733
1			3			TOTAL SHEETS	836
2			4				

PLANS PREPARED BY:

SIMPSON ENGINEERS & ASSOCIATES
5640 Dillard Drive
Suite 200
Cary, NC 27518
(919) 852-0468
(919) 852-0598 (Fax)
www.simpsonengr.com
LICENSURE NO. C-2521

NORTH CAROLINA PROFESSIONAL SEAL 023906 ENGINEER MARK A. AVERETTE
6-5-2013

DRAWN BY:	R. SEALEY	DATE:	4-13
CHECKED BY:	M. AVERETTE	DATE:	4-13
DESIGN ENGINEER OF RECORD:	M. AVERETTE	DATE:	4-13

6/5/2013 3:47:54 PM G:\Projects\2011\U-2524 (Guilford Co)\Structures\Ramp A\Drawings\Final\U-2524_sd_rpa_ebt1.dgn

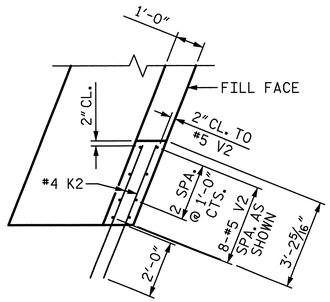

PLAN OF WING (W1)

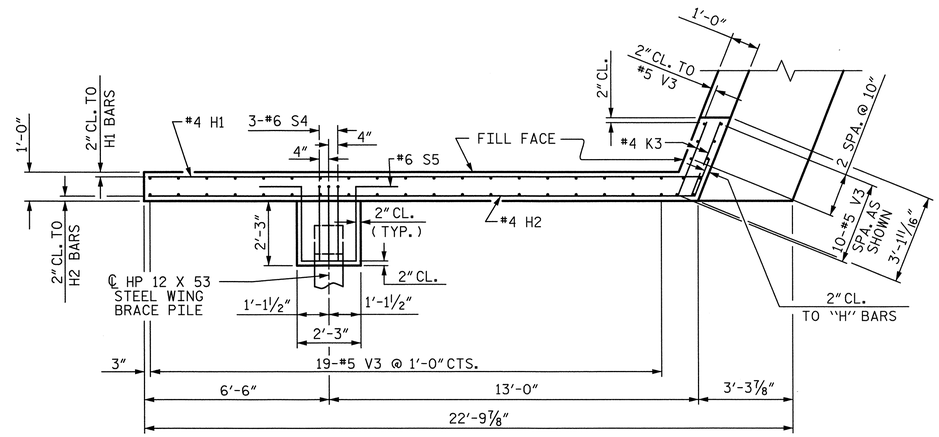

PLAN OF WING (W2)

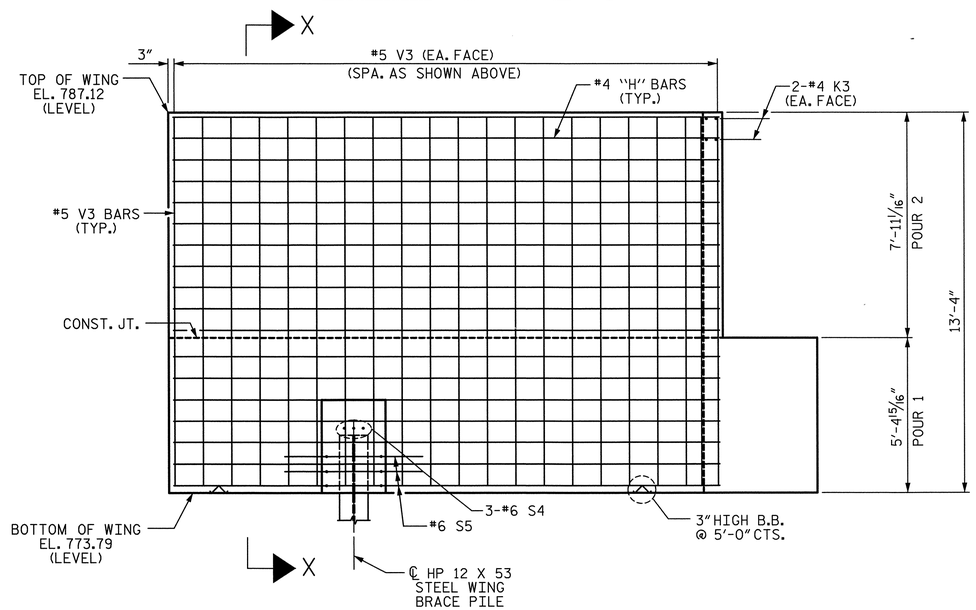

ELEVATION OF WING (W2)

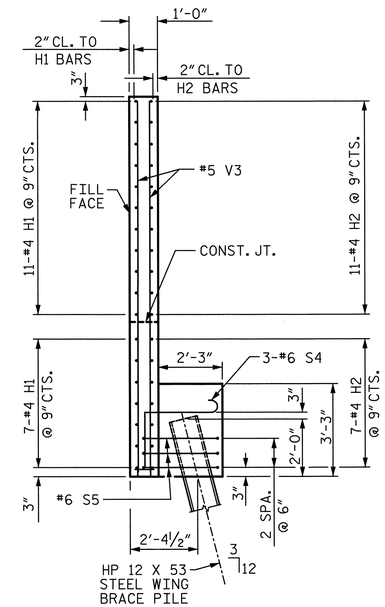

SECTION X-X

PROJECT NO. U-2524C

GUILFORD COUNTY

STATION: 9+53.33 -RPAY4-

SHEET 2 OF 3

STATE OF NORTH CAROLINA
DEPARTMENT OF TRANSPORTATION
RALEIGH

SUBSTRUCTURE

END BENT 1

-RAMP A-

REVISIONS						SHEET NO.
NO.	BY:	DATE:	NO.	BY:	DATE:	S-734
1			3			TOTAL SHEETS
2			4			836

PLANS PREPARED BY:

SIMPSON ENGINEERS & ASSOCIATES
5640 Dillard Drive
Suite 200
Cary, NC 27518
(919) 852-0468
(919) 852-0598 (Fax)
www.simpsonengr.com
LICENSURE NO. C-2521

NORTH CAROLINA PROFESSIONAL SEAL 023906 ENGINEER MARK A. AVERETTE
6-5-2013

DRAWN BY: R. SEALEY DATE: 4-13
CHECKED BY: M. AVERETTE DATE: 4-13
DESIGN ENGINEER OF RECORD: M. AVERETTE DATE: 4-13

6/5/2013 3:47:59 PM G:\Projects\2011\U-2524 (Guilford Co)\Structures\Ramp A\Drawings\Final\U-2524_sd_rpa_eb1.dgn

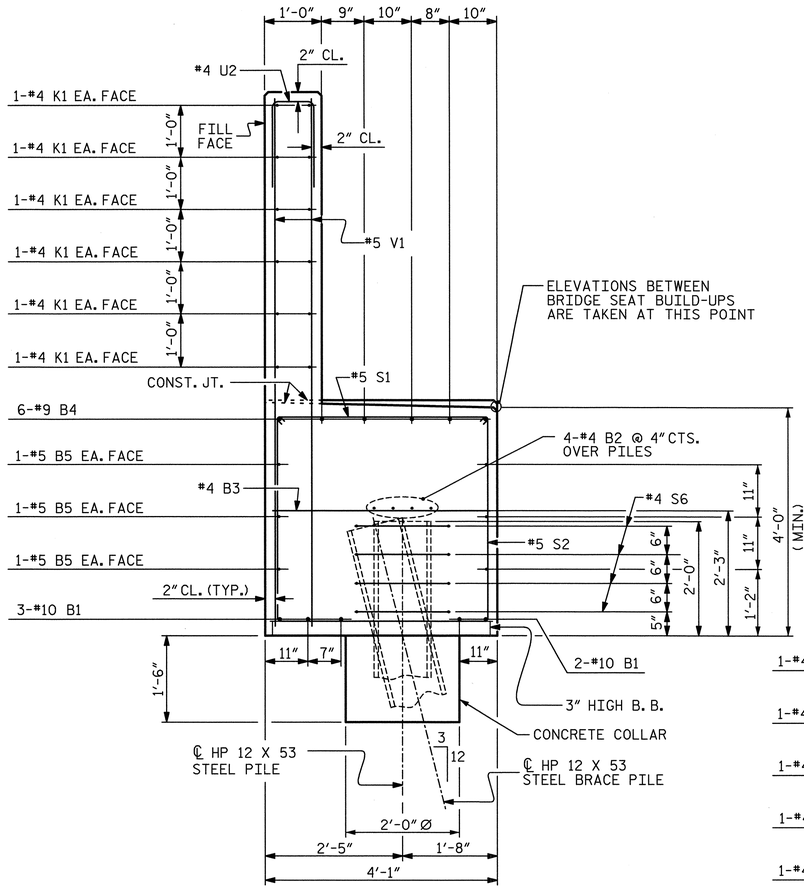

SECTION A-A

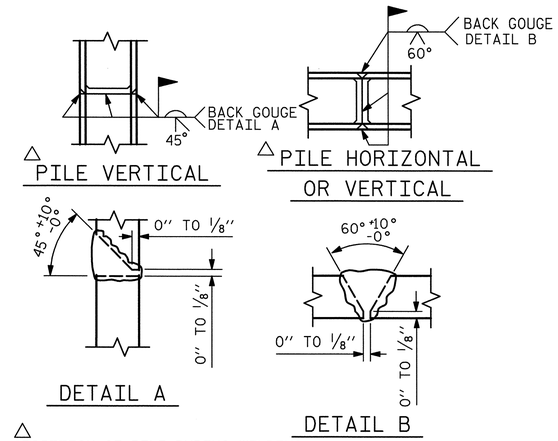

△ POSITION OF PILE DURING WELDING.

PILE SPLICE DETAILS

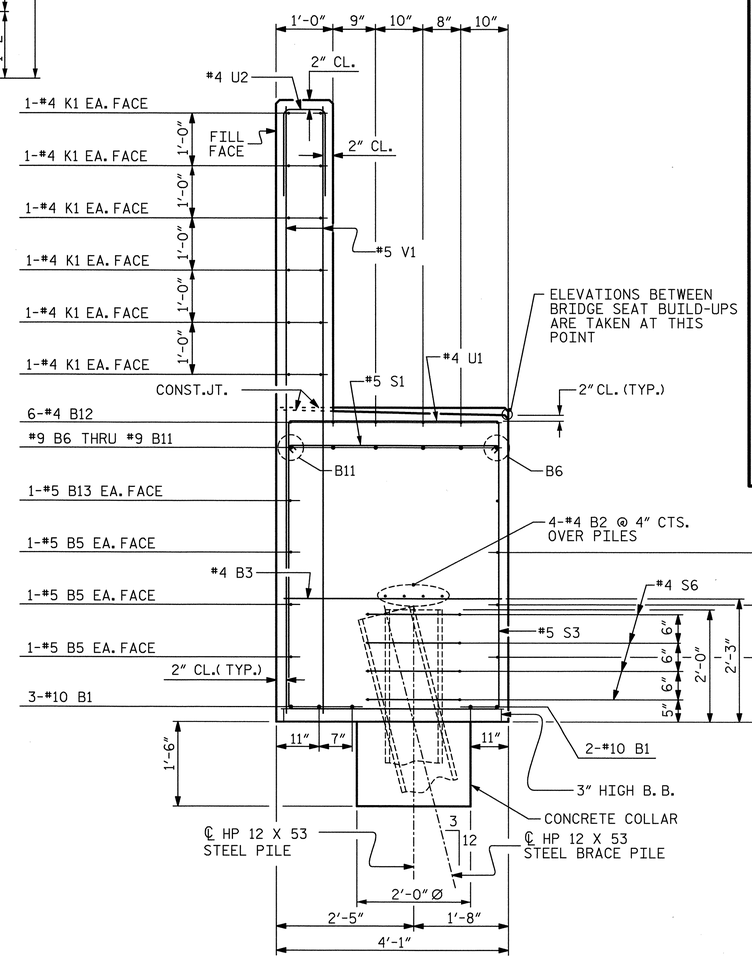

SECTION B-B

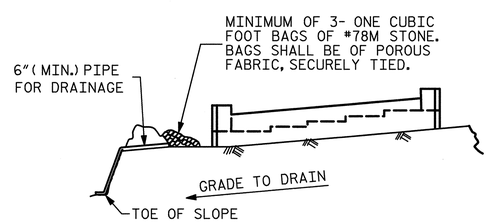

BAGGED STONE AND PIPE SHALL BE PLACED IMMEDIATELY AFTER COMPLETION OF END BENT EXCAVATION. PIPE MAY BE EITHER CONCRETE, CORRUGATED STEEL, CORRUGATED ALUMINUM ALLOY, OR CORRUGATED PLASTIC. PERFORATED PIPE WILL NOT BE ALLOWED.

BAGGED STONE SHALL REMAIN IN PLACE UNTIL THE ENGINEER DIRECTS THAT IT BE REMOVED. THE CONTRACTOR SHALL REMOVE AND DISPOSE OF SILT ACCUMULATIONS AT BAGGED STONE WHEN SO DIRECTED BY THE ENGINEER. BAGS SHALL BE REMOVED AND REPLACED WHENEVER THE ENGINEER DETERMINES THAT THEY HAVE DETERIORATED AND LOST THEIR EFFECTIVENESS.

NO SEPARATE PAYMENT WILL BE MADE FOR THIS WORK AND THE ENTIRE COST OF THIS WORK SHALL BE INCLUDED IN THE UNIT CONTRACT PRICE BID FOR THE SEVERAL PAY ITEMS.

TEMPORARY DRAINAGE AT END BENT

BAR TYPES

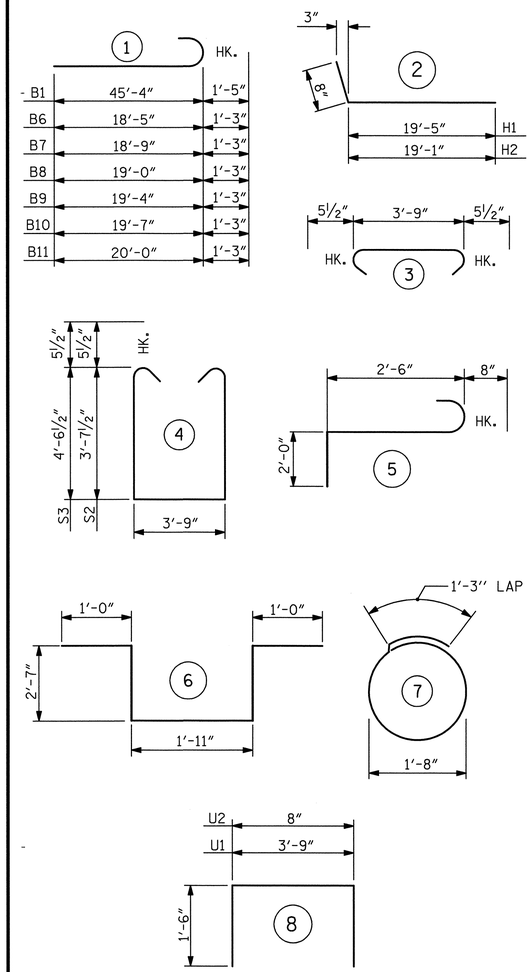

ALL BAR DIMENSIONS ARE OUT TO OUT

BILL OF MATERIAL
END BENT 1

BAR	NO.	SIZE	TYPE	LENGTH	WEIGHT
B1	5	10	1	46'-9"	1006
B2	8	4	STR	23'-11"	128
B3	13	4	STR	3'-9"	33
B4	6	9	STR	37'-3"	760
B5	6	5	STR	45'-5"	284
B6	1	9	1	19'-8"	67
B7	1	9	1	20'-0"	68
B8	1	9	1	20'-3"	69
B9	1	9	1	20'-7"	70
B10	1	9	1	20'-10"	71
B11	1	9	1	21'-3"	72
B12	12	4	STR	9'-6"	76
B13	2	5	STR	11'-2"	23
H1	18	4	2	20'-1"	241
H2	18	4	2	19'-9"	237
K1	24	4	STR	23'-11"	383
K2	4	4	STR	5'-0"	13
K3	4	4	STR	2'-9"	7
S1	44	5	3	4'-8"	214
S2	24	5	4	11'-11"	298
S3	20	5	4	13'-9"	287
S4	3	6	5	5'-2"	23
S5	3	6	6	9'-1"	41
S6	28	4	7	6'-6"	122
U1	13	4	8	6'-9"	59
U2	37	4	8	3'-8"	91
V1	74	5	STR	9'-7"	740
V2	8	5	STR	11'-4"	95
V3	48	5	STR	13'-0"	651

TOTAL REINFORCING STEEL 6229 LB

CLASS "A" CONCRETE BREAKDOWN
POUR 1
(CAP, COLLARS, & LOWER WINGS) 37.0 CY
POUR 2 (BACKWALL & UPPER WINGS) 16.0 CY
TOTAL CLASS "A" CONCRETE 53.0 CY

HP 12 X53 STEEL PILES
NO. 8 260 LF

PROJECT NO. U-2524C
GUILFORD COUNTY
STATION: 9+53.33 -RPAY4-

SHEET 3 OF 3

STATE OF NORTH CAROLINA
DEPARTMENT OF TRANSPORTATION
RALEIGH

SUBSTRUCTURE

END BENT 1

-RAMP A-

DRAWN BY: R. SEALEY DATE: 4-13
CHECKED BY: M. AVERETTE DATE: 4-13
DESIGN ENGINEER OF RECORD: M. AVERETTE DATE: 4-13

PLANS PREPARED BY:
SIMPSON ENGINEERS & ASSOCIATES
5640 Dillard Drive
Suite 200
Cary, NC 27518
(919) 852-0468
(919) 852-0598 (Fax)
www.simpsonengr.com
LICENSURE NO. C-2521

NORTH CAROLINA PROFESSIONAL SEAL 023908 ENGINEER MARK A. AVERETTE
6-5-2013

REVISIONS						
NO.	BY:	DATE:	NO.	BY:	DATE:	
1			3			
2			4			

SHEET NO. S-735
TOTAL SHEETS 836

6/5/2013 3:48:03 PM G:\Projects\2011\U-2524 (Guilford Co)\Structures\Ramp A\Drawings\Final\U-2524_sd_rpa_ebt1.dgn

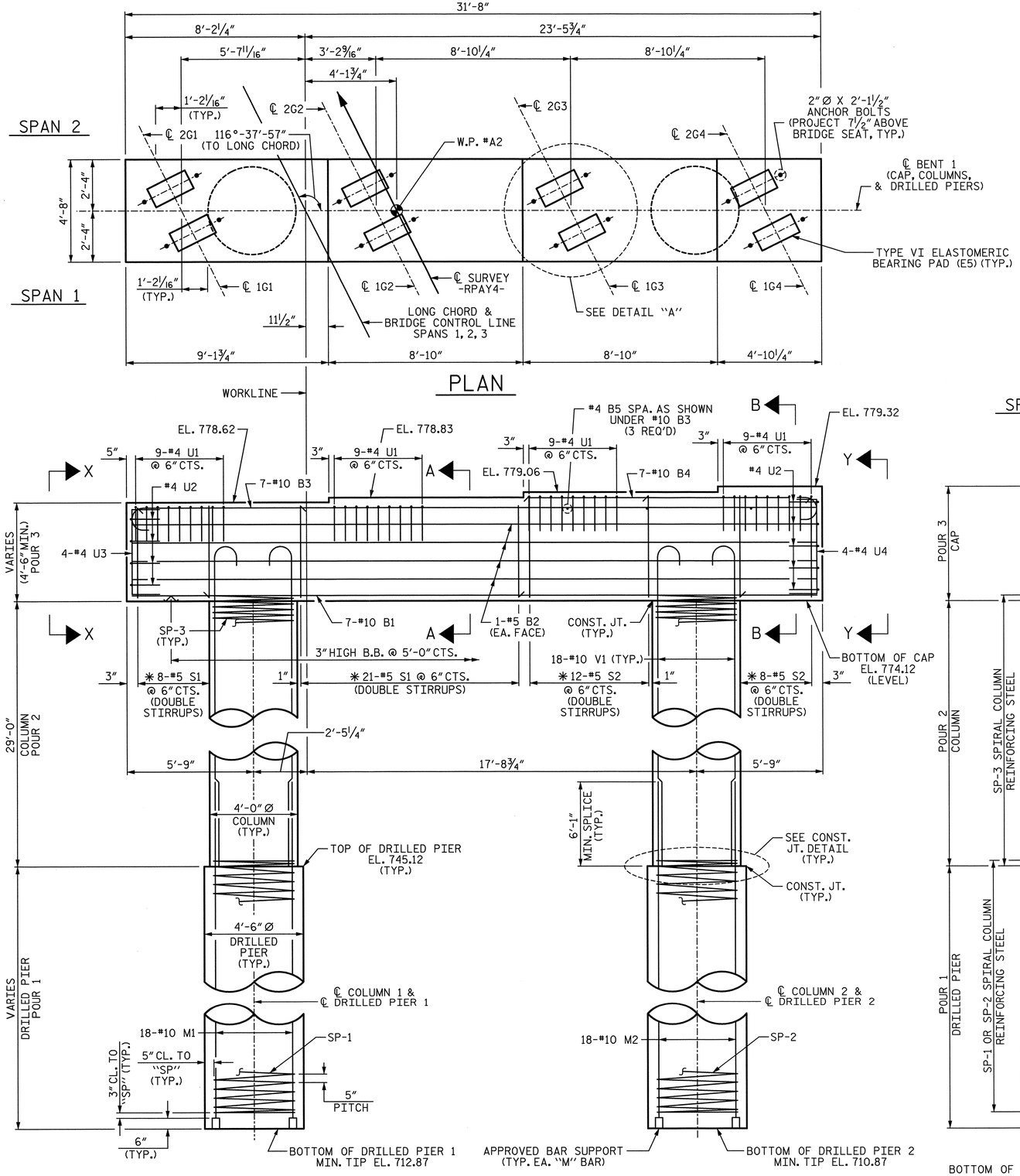

NOTES:

✱ INVERT ALTERNATE STIRRUPS.

STIRRUPS AND "U" BARS IN CAP MAY BE SHIFTED AS NECESSARY TO CLEAR ANCHOR BOLTS.

HOOKS ON "V" BARS MAY BE TURNED AS NECESSARY FOR PLACING REINFORCING STEEL.

ALL STEEL IN THE DRILLED PIERS IS INCLUDED IN THE PAY ITEMS FOR "REINFORCING STEEL" AND "SPIRAL COLUMN REINFORCING STEEL".

BENT 1 WORKLINE IS DIMENSIONED FROM THE LONG CHORD AND BRIDGE CONTROL LINE SPANS 1, 2, & 3.

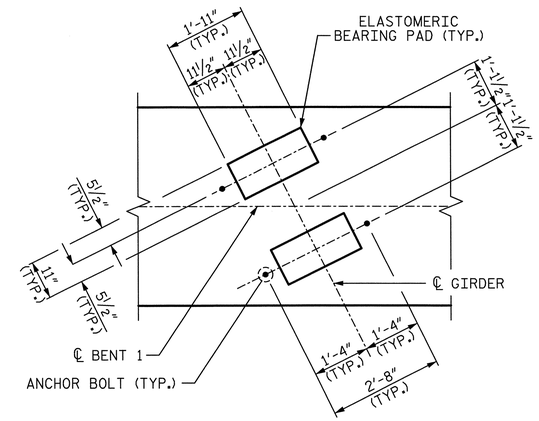

DETAIL "A"

TYP. EA. GIRDER

PROJECT NO. U-2524C

GUILFORD COUNTY

STATION: 9+53.33 -RPAY4-

SHEET 1 OF 2

STATE OF NORTH CAROLINA
DEPARTMENT OF TRANSPORTATION
RALEIGH

SUBSTRUCTURE

BENT 1

-RAMP A-

PLANS PREPARED BY:
SIMPSON ENGINEERS & ASSOCIATES
5640 Dillard Drive
Suite 200
Cary, NC 27518
(919) 852-0468
(919) 852-0598 (Fax)
www.simpsonengr.com
LICENSURE NO. C-2521

NORTH CAROLINA PROFESSIONAL SEAL 023906 ENGINEER MARK A. AVERETTE
6-5-2013

REVISIONS						SHEET NO.
NO.	BY:	DATE:	NO.	BY:	DATE:	S-736
1			3			TOTAL SHEETS
2			4			836

DRAWN BY: R. SEALEY DATE: 4-13
CHECKED BY: M. AVERETTE DATE: 4-13
DESIGN ENGINEER OF RECORD: M. AVERETTE DATE: 4-13

6/5/2013 3:48:09 PM G:\Projects\2011\U-2524 (Guilford Co)\Structures\Ramp A\Drawings\Final\U-2524_sd_rpa_bt1.dgn

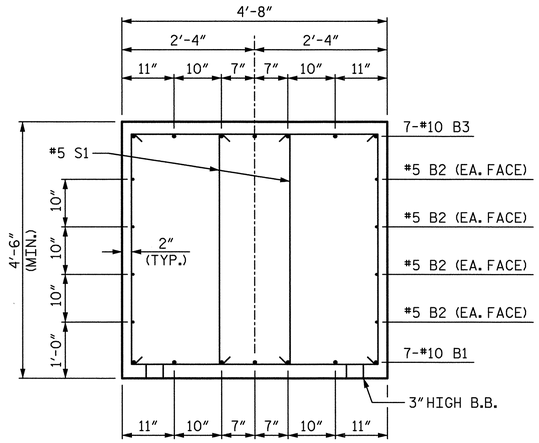

SECTION A-A

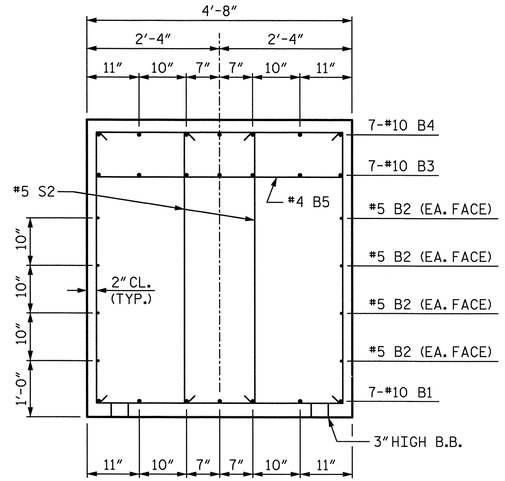

SECTION B-B

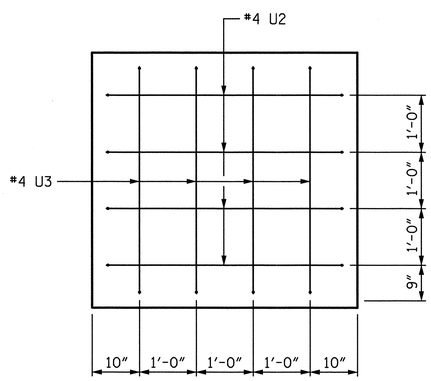

VIEW X-X

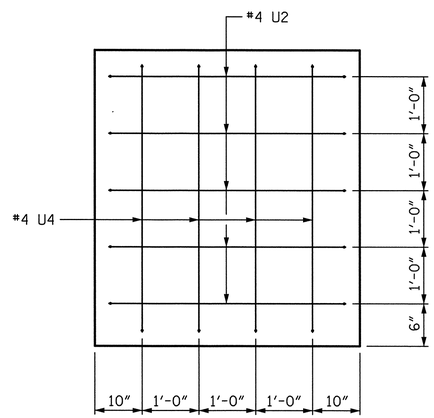

VIEW Y-Y

BAR TYPES

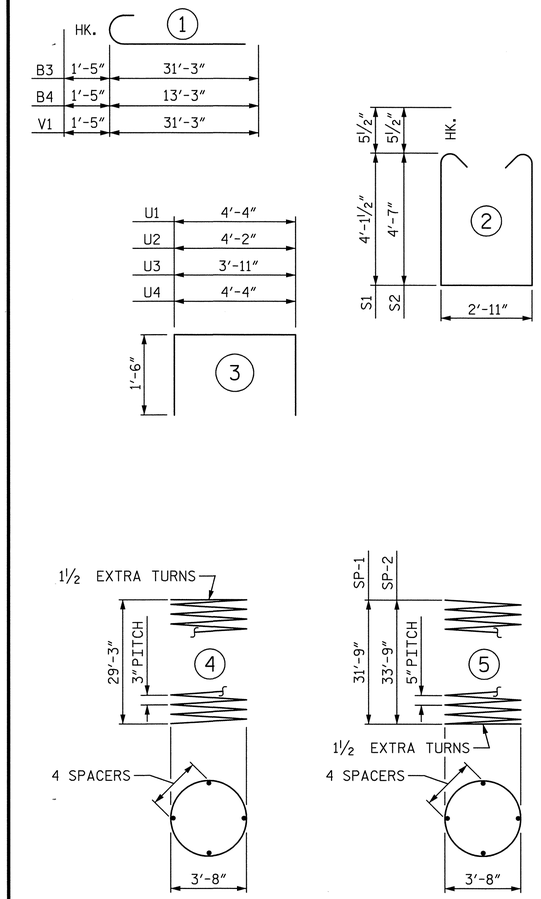

ALL BAR DIMENSIONS ARE OUT TO OUT

✱✱ THE "SP-1" AND "SP-2" SPIRAL REINFORCING STEEL SHALL BE W31 OR D-31 COLD DRAWN WIRE OR #5 PLAIN OR DEFORMED BAR.

✱ THE "SP-3" SPIRAL REINFORCING STEEL SHALL BE W20 OR D-20 COLD DRAWN WIRE OR #4 PLAIN OR DEFORMED BAR.

BILL OF MATERIAL

BENT 1

BAR	NO.	SIZE	TYPE	LENGTH	WEIGHT
B1	7	10	STR	31'-4"	944
B2	8	5	STR	31'-4"	261
B3	7	10	1	32'-8"	984
B4	7	10	1	14'-8"	442
B5	3	4	STR	4'-4"	9
M1	18	10	STR	37'-10"	2930
M2	18	10	STR	39'-10"	3085
S1	58	5	2	12'-1"	731
S2	40	5	2	13'-0"	542
U1	36	4	3	7'-4"	176
U2	9	4	3	7'-2"	43
U3	4	4	3	6'-11"	18
U4	4	4	3	7'-4"	20
V1	36	10	1	32'-8"	5060
SP-1	1	✱✱	5	886'-4"	924
SP-2	1	✱✱	5	954'-7"	996
SP-3	2	✱	4	1355'-7"	1811

REINFORCING STEEL	15245 LB
SPIRAL COL. REINF. STEEL	3731 LB
CLASS "A" CONCRETE BREAKDOWN	
POUR 2 (COLUMNS)	27.0 CY
POUR 3 (CAP)	26.3 CY
TOTAL	53.3 CY
DRILLED PIERS:	
DRILLED PIER CONCRETE POUR 1 (DRILLED PIERS)	39.2 CY
4'-6" Ø DRILLED PIER NOT IN SOIL	27.0 LF
4'-6" Ø DRILLED PIER IN SOIL	39.5 LF
CSL TUBES	278.0 LF

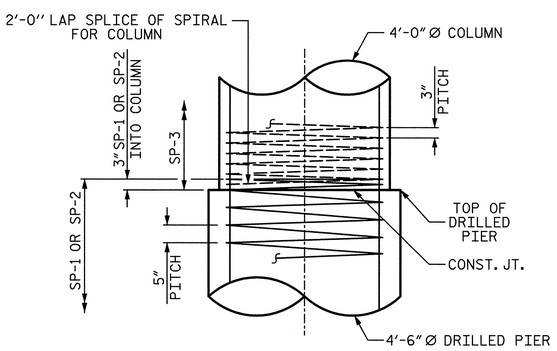

CONSTRUCTION JOINT DETAIL

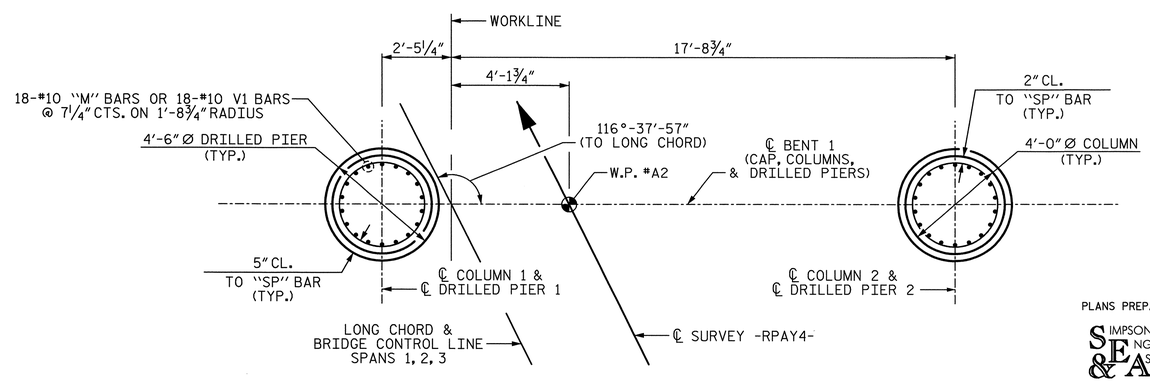

PLAN OF DRILLED PIERS & COLUMNS

(DIMENSIONS AND REINFORCING STEEL SHOWN ARE TYPICAL FOR EACH COLUMN AND DRILLED PIER)

PROJECT NO. U-2524C

GUILFORD COUNTY

STATION: 9+53.33 -RPAY4-

SHEET 2 OF 2

STATE OF NORTH CAROLINA
DEPARTMENT OF TRANSPORTATION
RALEIGH

SUBSTRUCTURE

BENT 1

-RAMP A-

PLANS PREPARED BY:
SIMPSON ENGINEERS & ASSOCIATES
5640 Dillard Drive
Suite 200
Cary, NC 27518
(919) 852-0468
(919) 852-0598 (Fax)
www.simpsonengr.com
LICENSURE NO. C-2521

NORTH CAROLINA PROFESSIONAL SEAL 023906 ENGINEER MARK A. AVERETTE
6-5-2013

REVISIONS						SHEET NO.
NO.	BY:	DATE:	NO.	BY:	DATE:	S-737
1			3			TOTAL SHEETS
2			4			836

DRAWN BY: R. SEALEY DATE: 4-13
CHECKED BY: M. AVERETTE DATE: 4-13
DESIGN ENGINEER OF RECORD: M. AVERETTE DATE: 4-13

6/5/2013 3:48:13 PM G:\Projects\2011\U-2524 (Guilford Co)\Structures\Ramp A\Drawings\Final\U-2524_sd_rpa_bt1.dgn

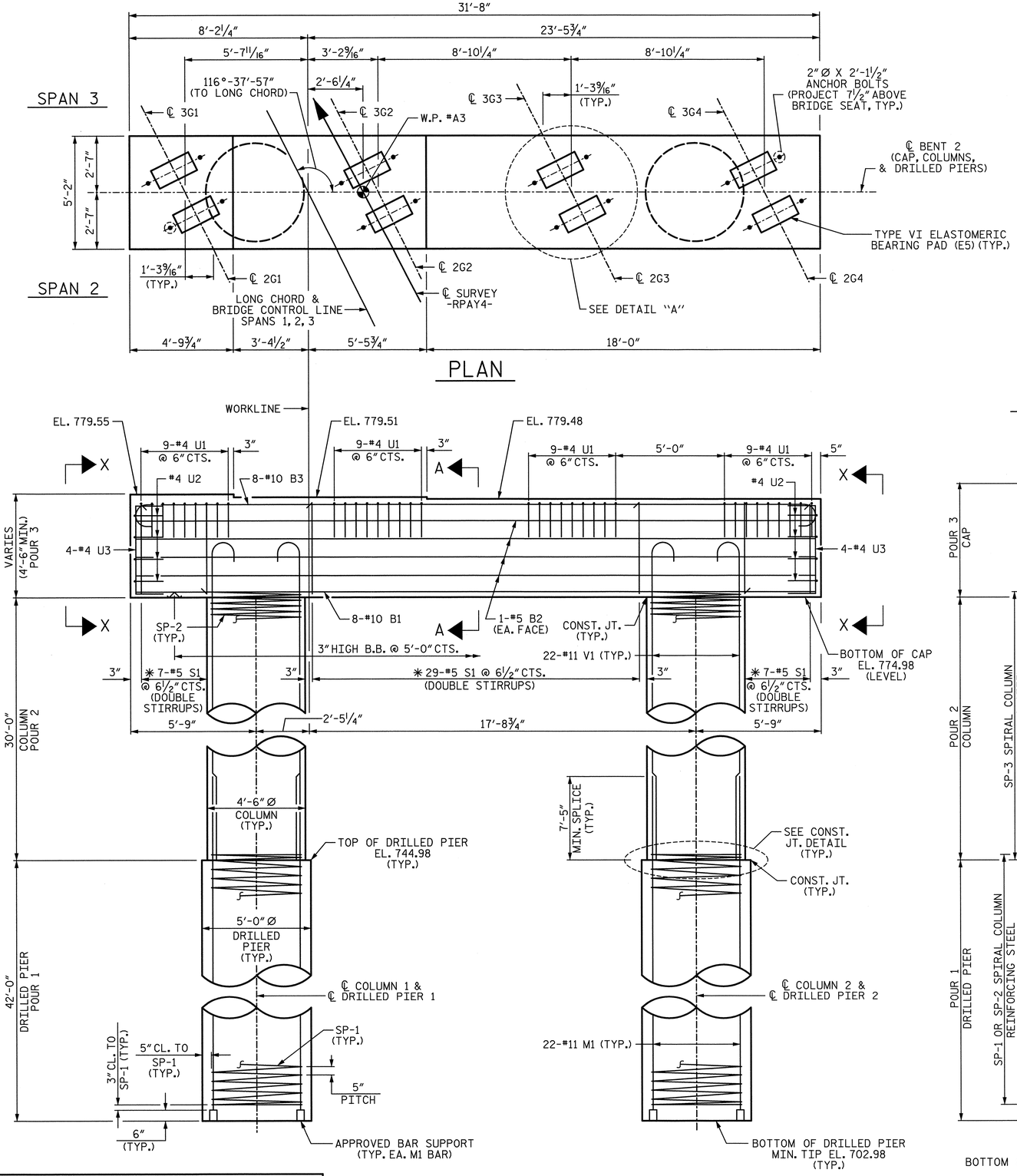

NOTES:

* INVERT ALTERNATE STIRRUPS.

STIRRUPS AND "U" BARS IN CAP MAY BE SHIFTED AS NECESSARY TO CLEAR ANCHOR BOLTS.

HOOKS ON "V" BARS MAY BE TURNED AS NECESSARY FOR PLACING REINFORCING STEEL.

ALL STEEL IN THE DRILLED PIERS IS INCLUDED IN THE PAY ITEMS FOR "REINFORCING STEEL" AND "SPIRAL COLUMN REINFORCING STEEL".

BENT 2 WORKLINE IS DIMENSIONED FROM THE LONG CHORD AND BRIDGE CONTROL LINE SPANS 1, 2, 3.

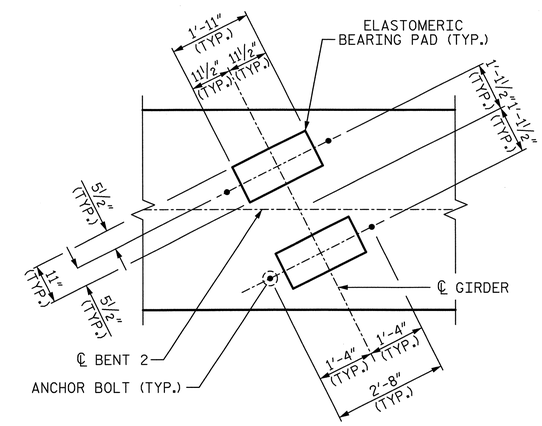

DETAIL "A"

TYP. EA. GIRDER

PROJECT NO. U-2524C

GUILFORD COUNTY

STATION: 9+53.33 -RPAY4-

SHEET 1 OF 2

PLANS PREPARED BY:

SIMPSON ENGINEERS & ASSOCIATES

5640 Dillard Drive
Suite 200
Cary, NC 27518
(919) 852-0468
(919) 852-0598 (Fax)
www.simpsonengr.com

LICENSURE NO. C2521

NORTH CAROLINA PROFESSIONAL SEAL 023908 ENGINEER MARK A. AVERETTE

6-5-2013

STATE OF NORTH CAROLINA
DEPARTMENT OF TRANSPORTATION
RALEIGH

SUBSTRUCTURE

BENT 2

-RAMP A-

REVISIONS						SHEET NO.
NO.	BY:	DATE:	NO.	BY:	DATE:	S-738
1			3			TOTAL SHEETS
2			4			836

DRAWN BY: R. SEALEY DATE: 4-13
CHECKED BY: M. AVERETTE DATE: 4-13
DESIGN ENGINEER OF RECORD: M. AVERETTE DATE: 4-13

6/5/2013 3:48:19 PM G:\Projects\2011\U-2524 (Guilford Co)\Structures\Ramp A\Drawings\Final\U-2524_sd_rpa_bt2.dgn

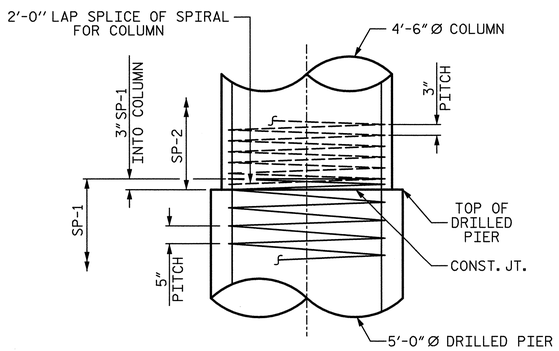

CONSTRUCTION JOINT DETAIL

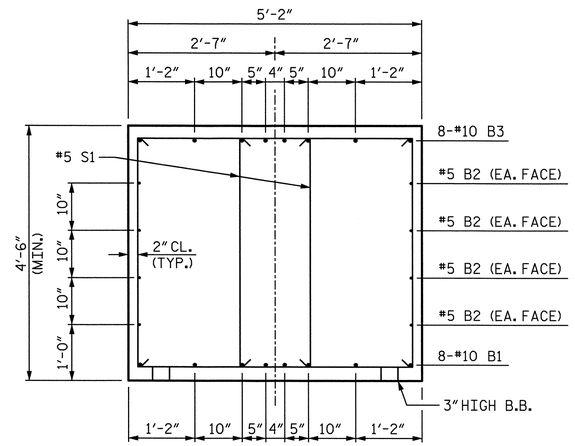

SECTION A-A

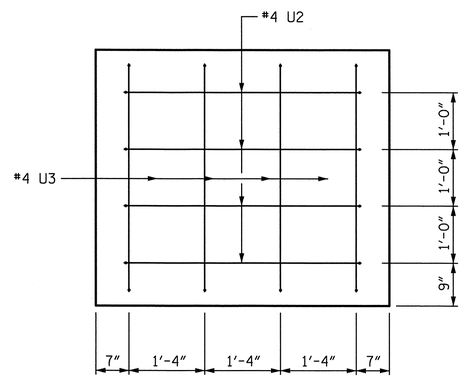

VIEW X-X

BAR TYPES

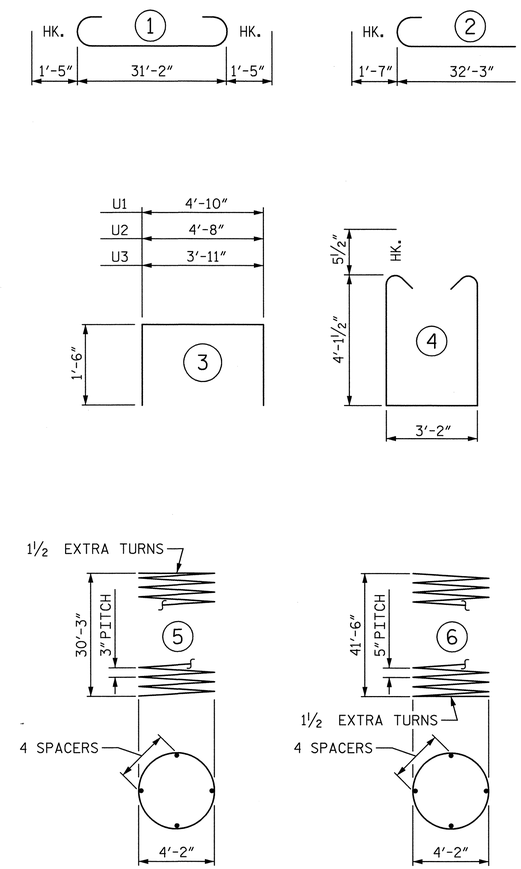

ALL BAR DIMENSIONS ARE OUT TO OUT

✱✱ THE "SP-1" SPIRAL REINFORCING STEEL SHALL BE W31 OR D-31 COLD DRAWN WIRE OR #5 PLAIN OR DEFORMED BAR.

✱ THE "SP-2" SPIRAL REINFORCING STEEL SHALL BE W20 OR D-20 COLD DRAWN WIRE OR #4 PLAIN OR DEFORMED BAR.

BILL OF MATERIAL

BENT 2

BAR	NO.	SIZE	TYPE	LENGTH	WEIGHT
B1	8	10	STR	31'-4"	1079
B2	8	5	STR	31'-4"	261
B3	8	10	1	34'-0"	1170
M1	44	11	STR	48'-11"	11435
S1	86	5	4	12'-4"	1106
U1	36	4	3	7'-10"	188
U2	8	4	3	7'-8"	41
U3	8	4	3	7'-11"	42
V1	44	11	2	33'-10"	7909
SP-1	2	✱✱	6	1319'-2"	2752
SP-2	2	✱	5	1594'-3"	2130

REINFORCING STEEL	23231 LB
SPIRAL COL. REINF. STEEL	4882 LB
CLASS "A" CONCRETE BREAKDOWN	
POUR 2 (COLUMNS)	35.4 CY
POUR 3 (CAP)	27.5 CY
TOTAL	62.9 CY
DRILLED PIERS:	
DRILLED PIER CONCRETE POUR 1 (DRILLED PIERS)	61.1 CY
5'-0" Ø DRILLED PIER NOT IN SOIL	29.0 LF
5'-0" Ø DRILLED PIER IN SOIL	55.0 LF
CSL TUBES	435.0 LF

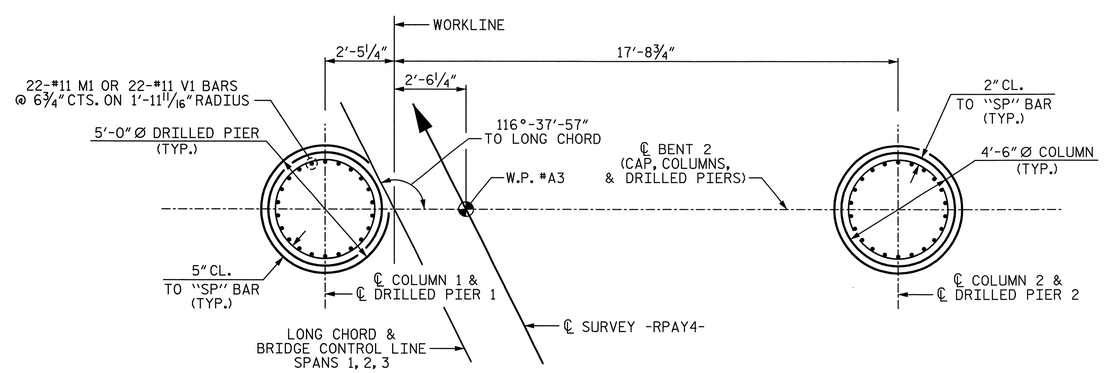

PLAN OF DRILLED PIERS & COLUMNS

(DIMENSIONS AND REINFORCING STEEL SHOWN ARE TYPICAL FOR EACH COLUMN AND DRILLED PIER)

PROJECT NO. U-2524C

GUILFORD COUNTY

STATION: 9+53.33 -RPAY4-

SHEET 2 OF 2

STATE OF NORTH CAROLINA
DEPARTMENT OF TRANSPORTATION
RALEIGH

SUBSTRUCTURE

BENT 2

-RAMP A-

PLANS PREPARED BY:

SIMPSON ENGINEERS & ASSOCIATES
5640 Dillard Drive
Suite 200
Cary, NC 27518
(919) 852-0468
(919) 852-0598 (Fax)
www.simpsonengr.com
LICENSURE NO. C-2521

NORTH CAROLINA PROFESSIONAL SEAL 023906 ENGINEER MARK A. AVERETTE
6-5-2013

REVISIONS						SHEET NO.
NO.	BY:	DATE:	NO.	BY:	DATE:	S-739
1			3			TOTAL SHEETS
2			4			836

DRAWN BY: R. SEALEY DATE: 4-13
CHECKED BY: M. AVERETTE DATE: 4-13
DESIGN ENGINEER OF RECORD: M. AVERETTE DATE: 4-13

6/5/2013 3:48:23 PM G:\Projects\2011\U-2524 (Guilford Co)\Structures\Ramp A\Drawings\Final\U-2524_sd_rpa_bt2.dgn

NOTES:

✱ INVERT ALTERNATE STIRRUPS.

STIRRUPS AND "U" BARS IN CAP MAY BE SHIFTED AS NECESSARY TO CLEAR ANCHOR BOLTS.

HOOKS ON "V" BARS MAY BE TURNED AS NECESSARY FOR PLACING REINFORCING STEEL.

ALL STEEL IN THE DRILLED PIERS IS INCLUDED IN THE PAY ITEMS FOR "REINFORCING STEEL" AND "SPIRAL COLUMN REINFORCING STEEL".

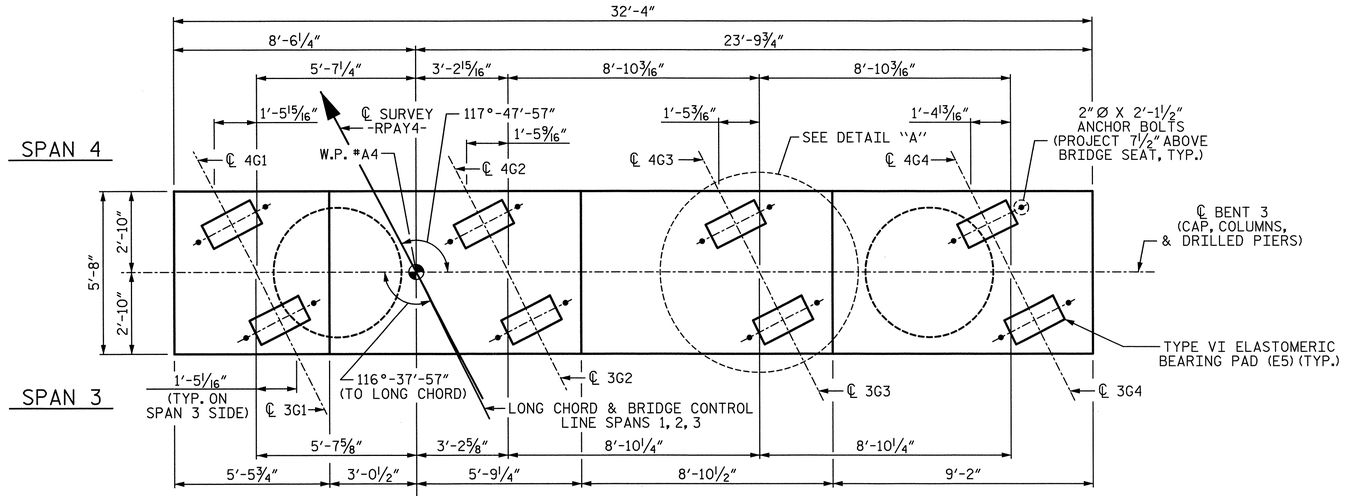

PLAN

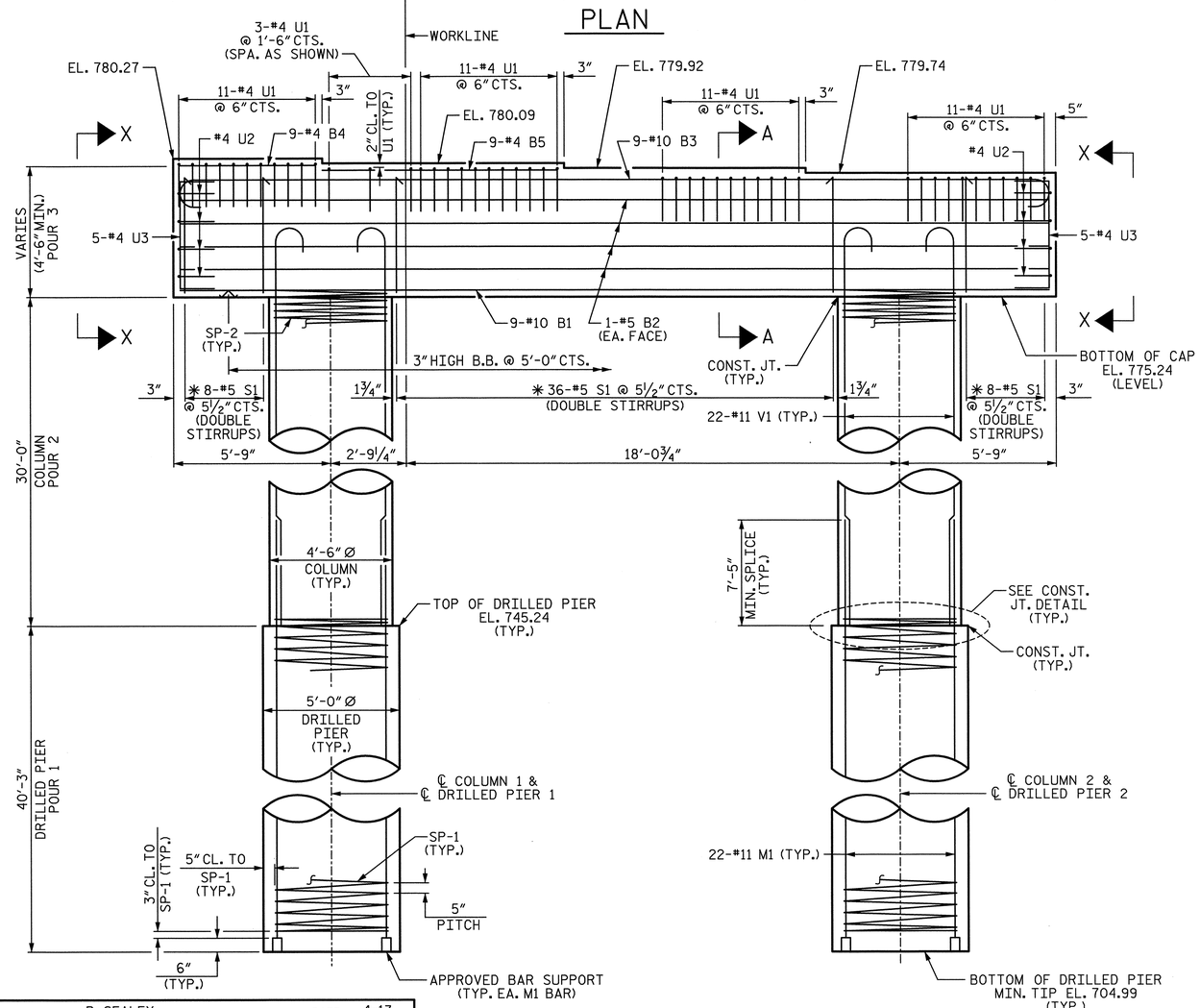

ELEVATION

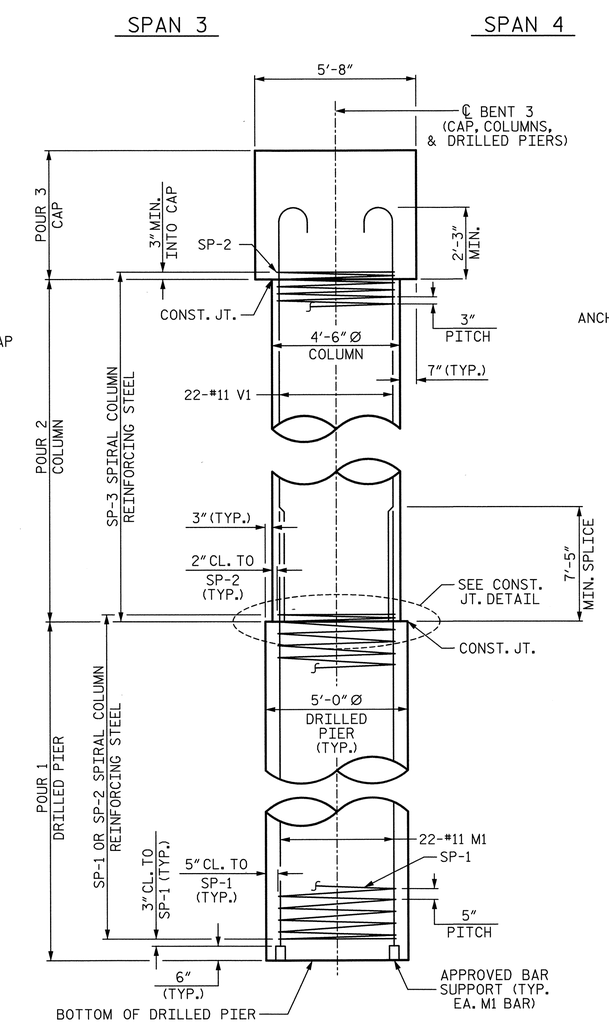

END ELEVATION

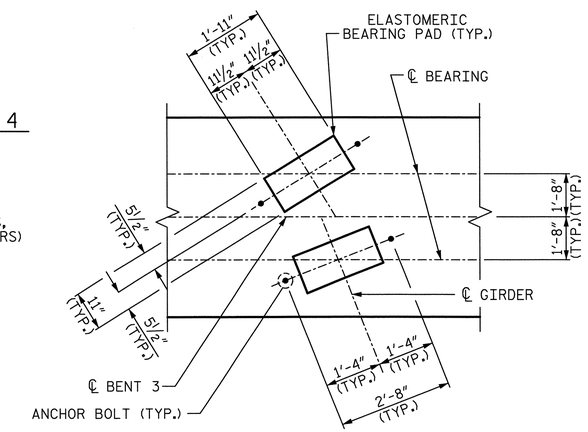

DETAIL "A"

TYP. EA. GIRDER

PROJECT NO. U-2524C

GUILFORD COUNTY

STATION: 9+53.33 -RPAY4-

SHEET 1 OF 2

PLANS PREPARED BY:

SIMPSON ENGINEERS & ASSOCIATES

5640 Dillard Drive
Suite 200
Cary, NC 27518
(919) 852-0468
(919) 852-0598 (Fax)
www.simpsonengr.com

LICENSURE NO. C2521

NORTH CAROLINA PROFESSIONAL SEAL 023906 ENGINEER MARK A. AVERETTE 6-5-2013

STATE OF NORTH CAROLINA
DEPARTMENT OF TRANSPORTATION
RALEIGH

SUBSTRUCTURE

BENT 3

-RAMP A-

REVISIONS							
NO.	BY:	DATE:	NO.	BY:	DATE:	SHEET NO.	S-740
1			3			TOTAL SHEETS	836
2			4				

DRAWN BY:	R. SEALEY	DATE:	4-13
CHECKED BY:	M. AVERETTE	DATE:	4-13
DESIGN ENGINEER OF RECORD:	M. AVERETTE	DATE:	4-13

6/5/2013 3:48:29 PM G:\Projects\2011\U-2524 (Guilford Co)\Structures\Ramp A\Drawings\Final\U-2524_sd_rpa_bt3.dgn

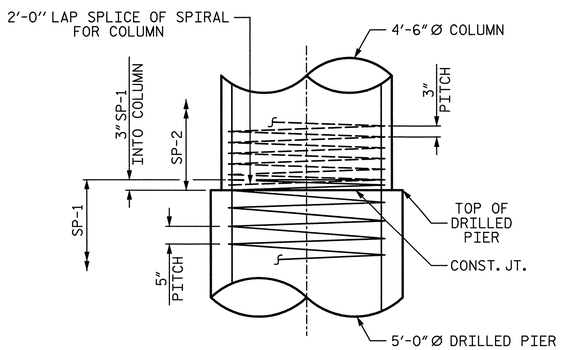

CONSTRUCTION JOINT DETAIL

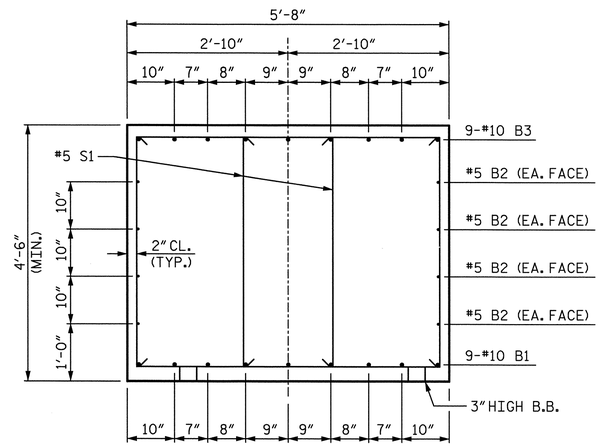

SECTION A-A

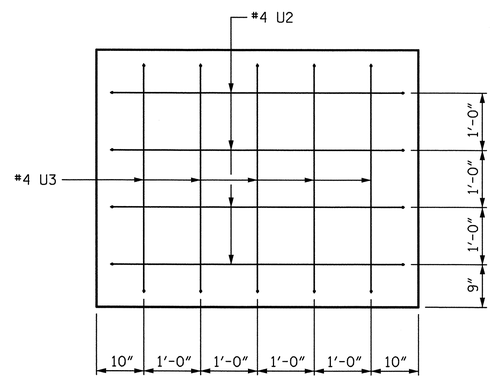

VIEW X-X

BAR TYPES

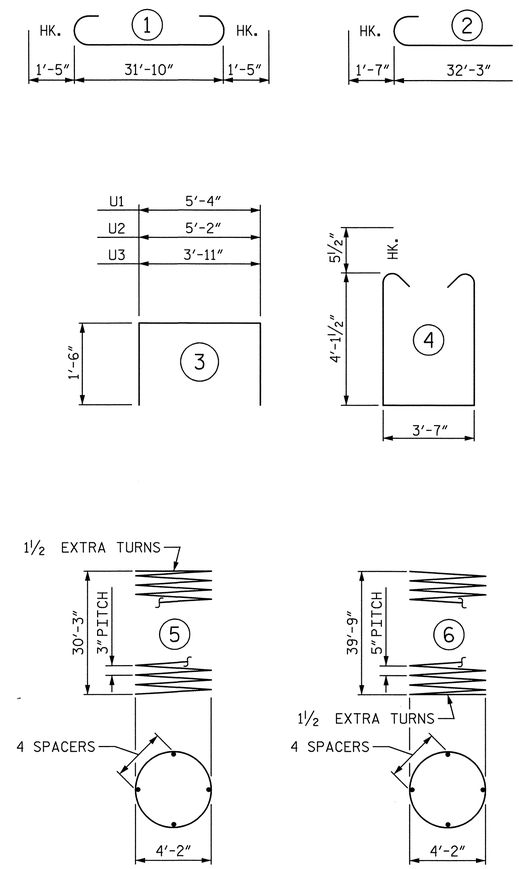

ALL BAR DIMENSIONS ARE OUT TO OUT

BILL OF MATERIAL

BENT 3

BAR	NO.	SIZE	TYPE	LENGTH	WEIGHT
B1	9	10	STR	32'-0"	1239
B2	8	5	STR	32'-0"	267
B3	9	10	1	34'-8"	1343
B4	9	4	STR	5'-1"	31
B5	9	4	STR	8'-8"	52
M1	44	11	STR	47'-2"	11026
S1	104	5	4	12'-9"	1383
U1	47	4	3	8'-4"	262
U2	8	4	3	8'-2"	44
U3	10	4	3	6'-11"	46
V1	44	11	2	33'-10"	7909
SP-1	2	✱✱	6	1241'-7"	2590
SP-2	2	✱	5	1594'-3"	2130

REINFORCING STEEL	23602 LB
SPIRAL COL. REINF. STEEL	4720 LB
CLASS "A" CONCRETE BREAKDOWN	
POUR 2 (COLUMNS)	35.4 CY
POUR 3 (CAP)	32.2 CY
TOTAL	67.6 CY
DRILLED PIERS:	
DRILLED PIER CONCRETE POUR 1 (DRILLED PIERS)	58.6 CY
5'-0" Ø DRILLED PIER NOT IN SOIL	25.0 LF
5'-0" Ø DRILLED PIER IN SOIL	55.5 LF
CSL TUBES	417.5 LF

✱✱ THE "SP-1" SPIRAL REINFORCING STEEL SHALL BE W31 OR D-31 COLD DRAWN WIRE OR #5 PLAIN OR DEFORMED BAR.

✱ THE "SP-2" SPIRAL REINFORCING STEEL SHALL BE W20 OR D-20 COLD DRAWN WIRE OR #4 PLAIN OR DEFORMED BAR.

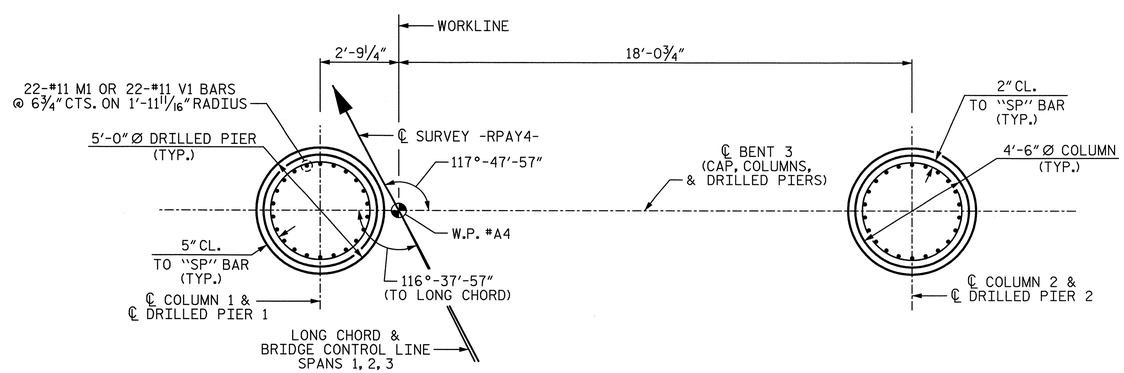

PLAN OF DRILLED PIERS & COLUMNS

(DIMENSIONS AND REINFORCING STEEL SHOWN ARE TYPICAL FOR EACH COLUMN AND DRILLED PIER)

PROJECT NO. U-2524C

GUILFORD COUNTY

STATION: 9+53.33 -RPAY4-

SHEET 2 OF 2

STATE OF NORTH CAROLINA
DEPARTMENT OF TRANSPORTATION
RALEIGH

SUBSTRUCTURE

BENT 3

-RAMP A-

PLANS PREPARED BY:

SIMPSON ENGINEERS & ASSOCIATES
5640 Dillard Drive
Suite 200
Cary, NC 27518
(919) 852-0468
(919) 852-0598 (Fax)
www.simpsonengr.com
LICENSURE NO. C-2521

NORTH CAROLINA PROFESSIONAL SEAL 023906 ENGINEER MARK A. AVERETTE
6-5-2013

REVISIONS								SHEET NO.
NO.	BY:	DATE:	NO.	BY:	DATE:			S-741
1			3					TOTAL SHEETS
2			4					836

DRAWN BY: R. SEALEY DATE: 4-13
CHECKED BY: M. AVERETTE DATE: 4-13
DESIGN ENGINEER OF RECORD: M. AVERETTE DATE: 4-13

6/5/2013 3:48:33 PM G:\Projects\2011\U-2524 (Guilford Co)\Structures\Ramp A\Drawings\Final\U-2524_sd_rpa_bt3.dgn

NOTES:

✱ INVERT ALTERNATE STIRRUPS.

STIRRUPS AND "U" BARS IN CAP MAY BE SHIFTED AS NECESSARY TO CLEAR ANCHOR BOLTS.

HOOKS ON "V" BARS MAY BE TURNED AS NECESSARY FOR PLACING REINFORCING STEEL.

ALL STEEL IN THE DRILLED PIERS IS INCLUDED IN THE PAY ITEMS FOR "REINFORCING STEEL" AND "SPIRAL COLUMN REINFORCING STEEL".

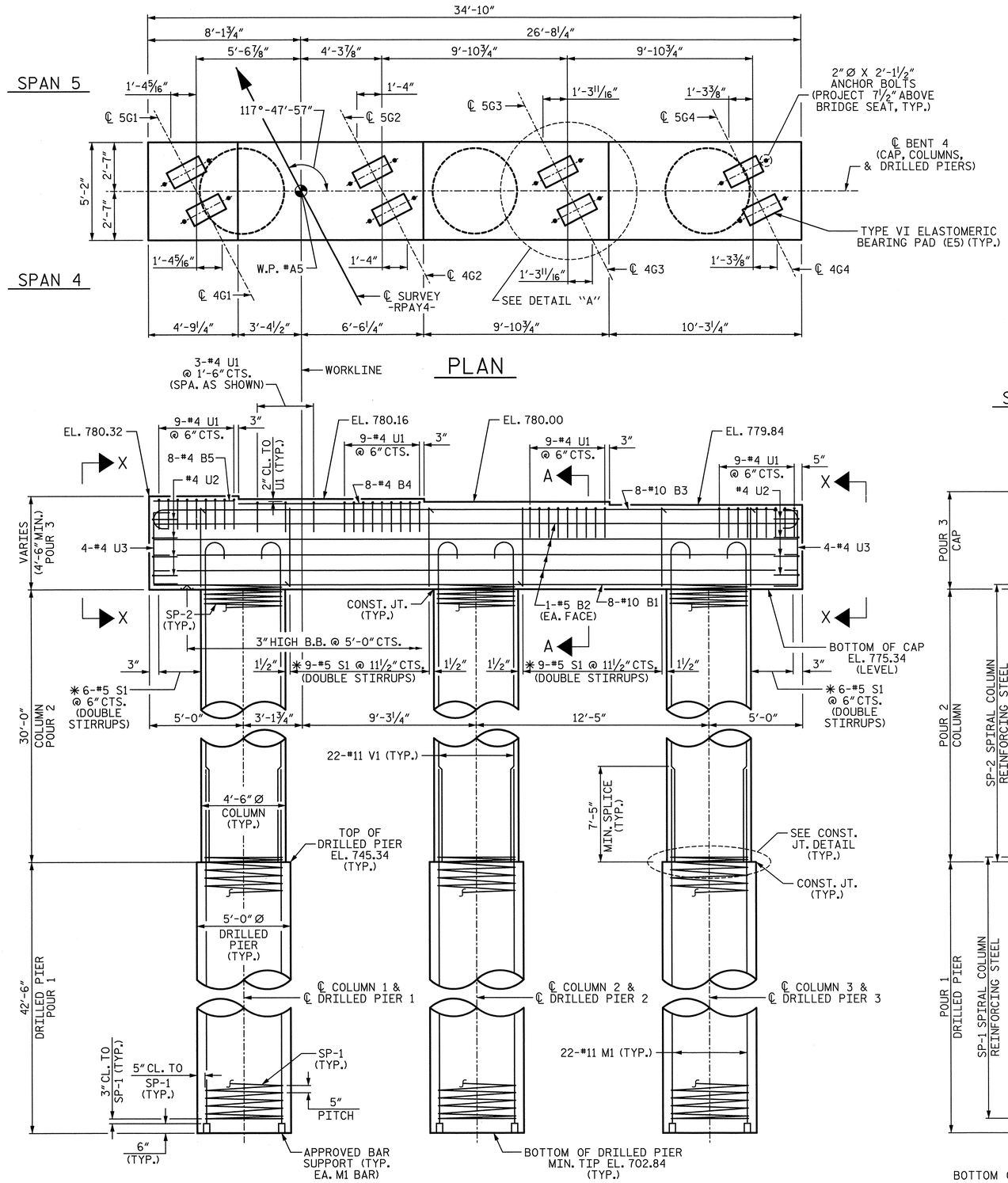

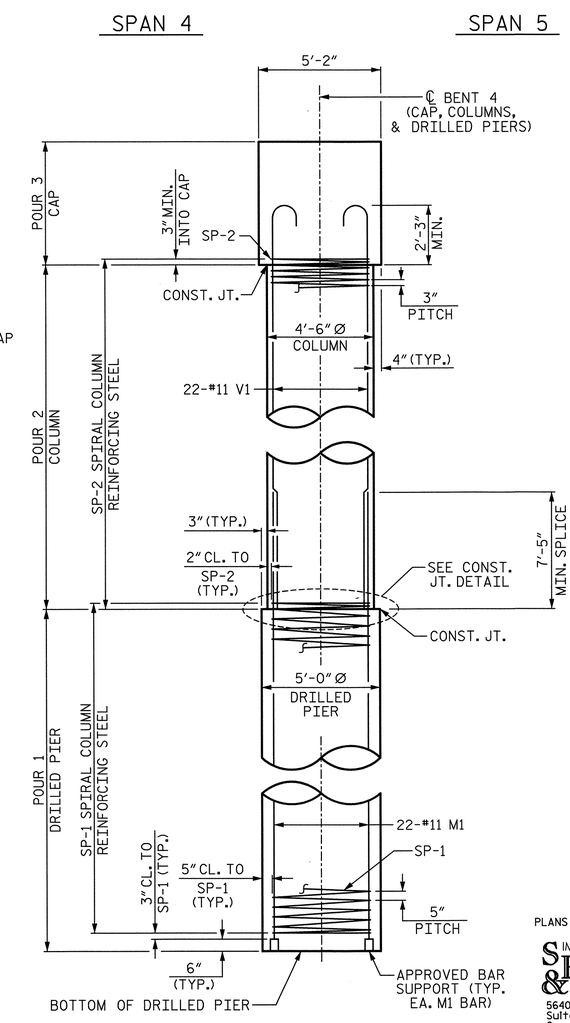

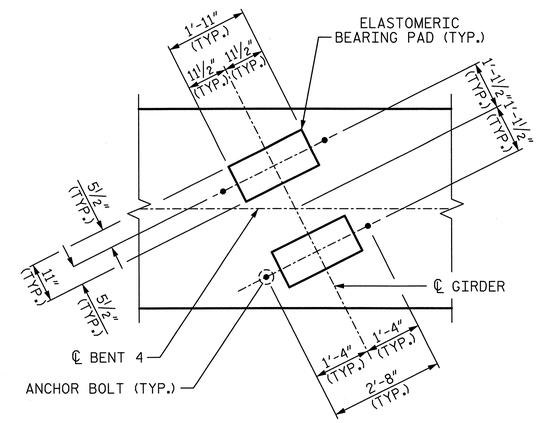

DETAIL "A"

TYP. EA. GIRDER

PROJECT NO. U-2524C

GUILFORD COUNTY

STATION: 9+53.33 -RPAY4-

SHEET 1 OF 2

STATE OF NORTH CAROLINA
DEPARTMENT OF TRANSPORTATION
RALEIGH

SUBSTRUCTURE

BENT 4

-RAMP A-

REVISIONS								SHEET NO.
NO.	BY:	DATE:	NO.	BY:	DATE:			S-742
1			3					TOTAL SHEETS
2			4					836

PLANS PREPARED BY:

SIMPSON ENGINEERS & ASSOCIATES
5640 Dillard Drive
Suite 200
Cary, NC 27518
(919) 852-0468
(919) 852-0598 (Fax)
www.simpsonengr.com
LICENSURE NO. C-2521

NORTH CAROLINA PROFESSIONAL SEAL 023908 ENGINEER MARK A. AVERETTE
6-5-2013

DRAWN BY:	R. SEALEY	DATE:	4-13
CHECKED BY:	M. AVERETTE	DATE:	4-13
DESIGN ENGINEER OF RECORD:	M. AVERETTE	DATE:	4-13

6/5/2013 3:48:39 PM G:\Projects\2011\U-2524 (Guilford Co)\Structures\Ramp A\Drawings\Final\U-2524_sd_rpa_bt4.dgn

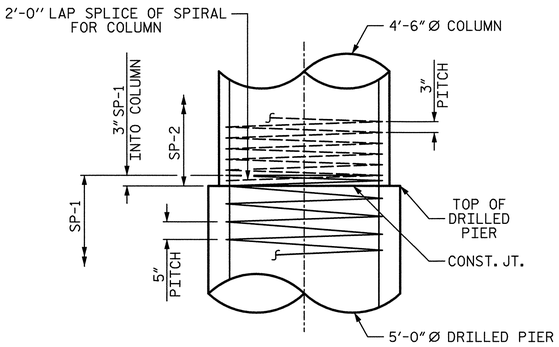

CONSTRUCTION JOINT DETAIL

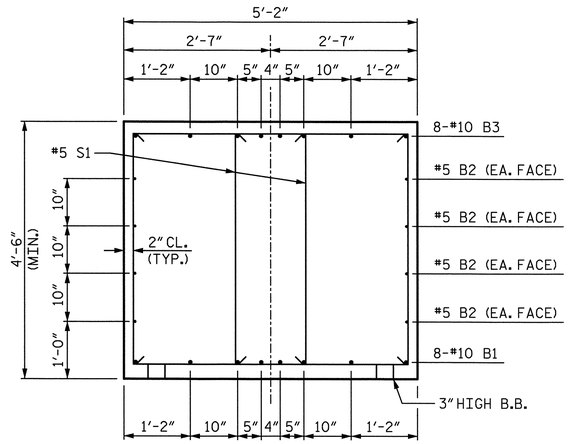

SECTION A-A

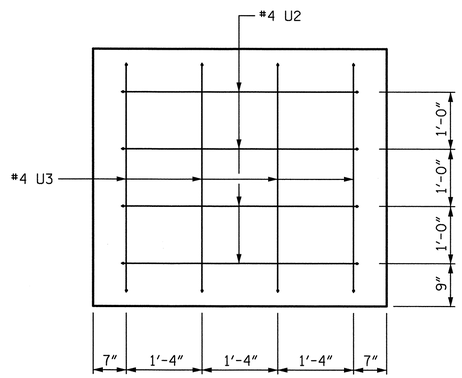

VIEW X-X

BAR TYPES

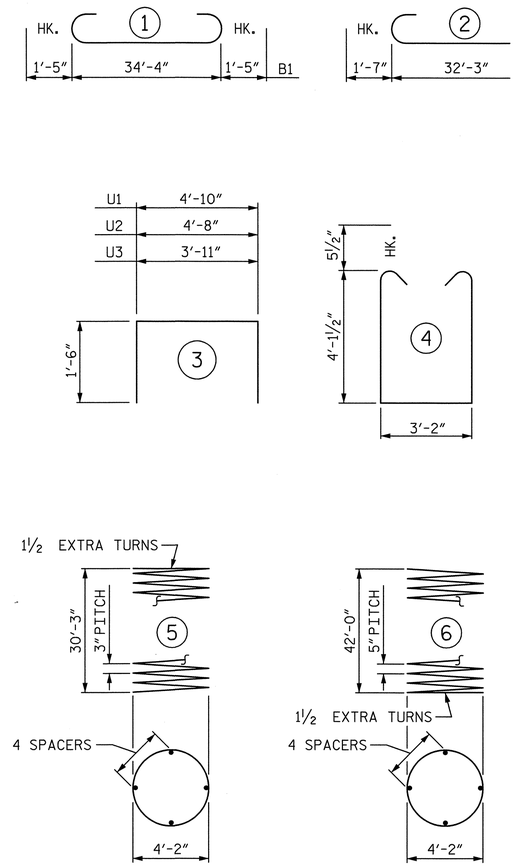

ALL BAR DIMENSIONS ARE OUT TO OUT

✳✳ THE "SP-1" SPIRAL REINFORCING STEEL SHALL BE W31 OR D-31 COLD DRAWN WIRE OR #5 PLAIN OR DEFORMED BAR.

✳ THE "SP-2" SPIRAL REINFORCING STEEL SHALL BE W20 OR D-20 COLD DRAWN WIRE OR #4 PLAIN OR DEFORMED BAR.

BILL OF MATERIAL

BENT 4

BAR	NO.	SIZE	TYPE	LENGTH	WEIGHT
B1	8	10	STR	34'-6"	1188
B2	8	5	STR	34'-6"	288
B3	8	10	1	37'-2"	1279
B4	8	4	STR	9'-9"	52
B5	8	4	STR	4'-5"	24
M1	66	11	STR	49'-5"	17328
S1	60	5	4	12'-4"	772
U1	39	4	3	7'-10"	204
U2	8	4	3	7'-8"	41
U3	8	4	3	6'-11"	37
V1	66	11	2	33'-10"	11863
SP-1	3	✳✳	6	1332'-2"	4168
SP-2	3	✳	5	1594'-3"	3195

REINFORCING STEEL	33076 LB
SPIRAL COL. REINF. STEEL	7363 LB
CLASS "A" CONCRETE BREAKDOWN	
POUR 2 (COLUMNS)	53.1 CY
POUR 3 (CAP)	31.4 CY
TOTAL	84.5 CY
DRILLED PIERS:	
DRILLED PIER CONCRETE POUR 1 (DRILLED PIERS)	92.8 CY
5'-0" Ø DRILLED PIER NOT IN SOIL	44.0 LF
5'-0" Ø DRILLED PIER IN SOIL	83.5 LF
CSL TUBES	660.0 LF

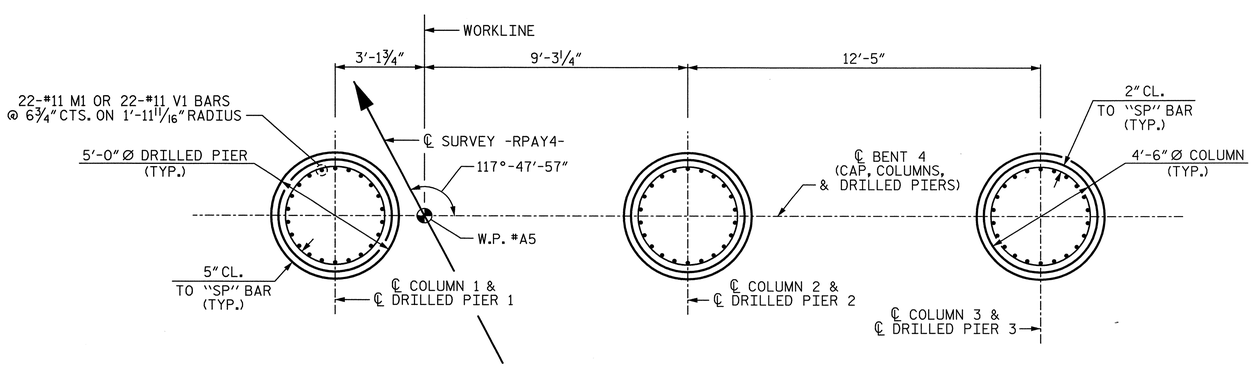

PLAN OF DRILLED PIERS & COLUMNS

(DIMENSIONS AND REINFORCING STEEL SHOWN ARE TYPICAL FOR EACH COLUMN AND DRILLED PIER)

PROJECT NO. U-2524C

GUILFORD COUNTY

STATION: 9+53.33 -RPAY4-

SHEET 2 OF 2

STATE OF NORTH CAROLINA
DEPARTMENT OF TRANSPORTATION
RALEIGH

SUBSTRUCTURE

BENT 4

-RAMP A-

PLANS PREPARED BY:

SIMPSON ENGINEERS & ASSOCIATES
5640 Dillard Drive
Suite 200
Cary, NC 27518
(919) 852-0468
(919) 852-0598 (Fax)
www.simpsonengr.com
LICENSURE NO. C-2521

NORTH CAROLINA PROFESSIONAL ENGINEER SEAL 023906 MARK A. AVERETTE
6-5-2013

REVISIONS								SHEET NO.
NO.	BY:	DATE:	NO.	BY:	DATE:			S-743
1			3					TOTAL SHEETS
2			4					836

DRAWN BY: R. SEALEY DATE: 4-13
CHECKED BY: M. AVERETTE DATE: 4-13
DESIGN ENGINEER OF RECORD: M. AVERETTE DATE: 4-13

6/5/2013 3:48:43 PM G:\Projects\2011\U-2524 (Guilford Co)\Structures\Ramp A\Drawings\Final\U-2524_sd_rpa_bt4.dgn

NOTES:

✳ INVERT ALTERNATE STIRRUPS.

STIRRUPS AND "U" BARS IN CAP MAY BE SHIFTED AS NECESSARY TO CLEAR ANCHOR BOLTS.

HOOKS ON "V" BARS MAY BE TURNED AS NECESSARY FOR PLACING REINFORCING STEEL.

ALL STEEL IN THE DRILLED PIERS IS INCLUDED IN THE PAY ITEMS FOR "REINFORCING STEEL" AND "SPIRAL COLUMN REINFORCING STEEL".

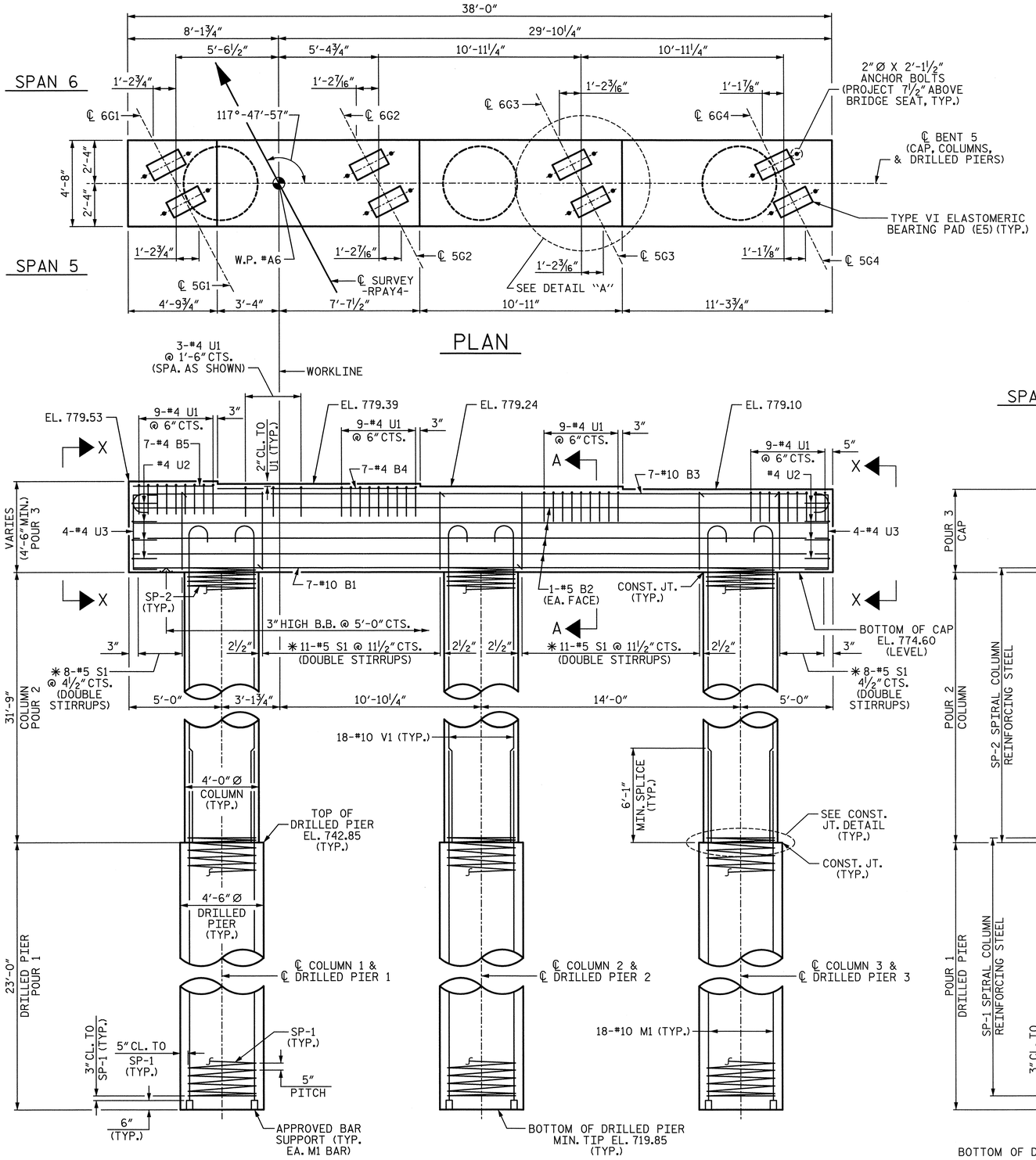

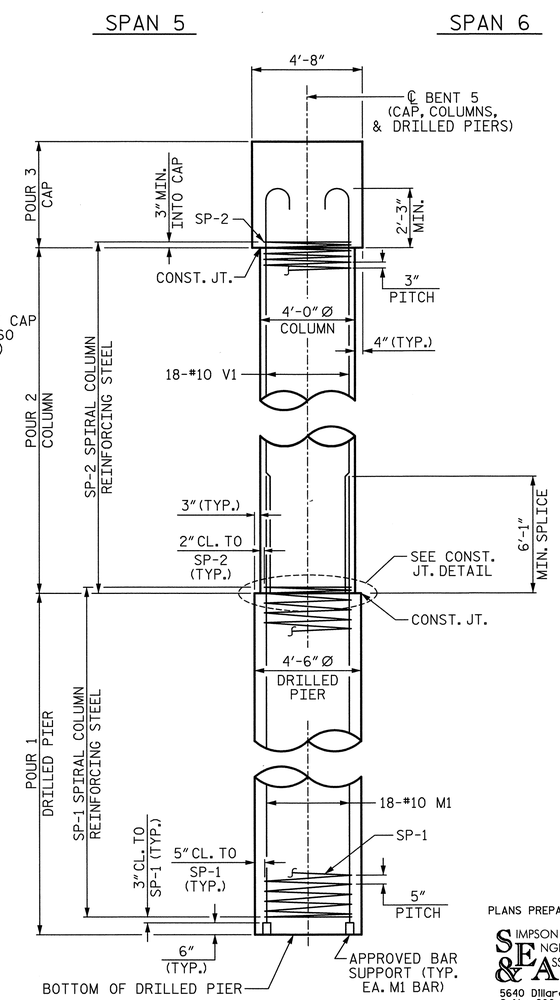

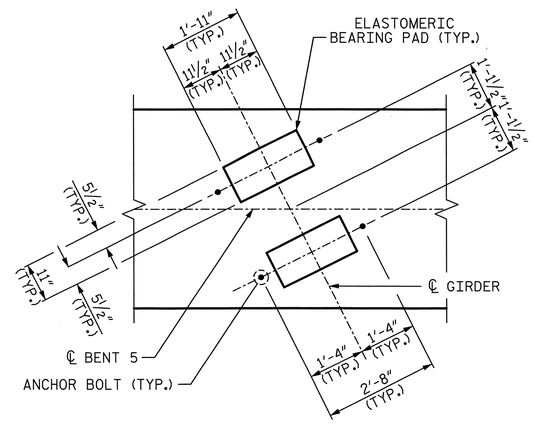

DETAIL "A"

TYP. EA. GIRDER

PROJECT NO. U-2524C

GUILFORD COUNTY

STATION: 9+53.33 -RPAY4-

SHEET 1 OF 2

STATE OF NORTH CAROLINA
DEPARTMENT OF TRANSPORTATION
RALEIGH

SUBSTRUCTURE

BENT 5

-RAMP A-

REVISIONS						SHEET NO.
NO.	BY:	DATE:	NO.	BY:	DATE:	S-744
1			3			TOTAL SHEETS
2			4			836

DRAWN BY: R. SEALEY DATE: 4-13
CHECKED BY: M. AVERETTE DATE: 4-13
DESIGN ENGINEER OF RECORD: M. AVERETTE DATE: 4-13

PLANS PREPARED BY:
SIMPSON ENGINEERS & ASSOCIATES
5640 Dillard Drive
Suite 200
Cary, NC 27518
(919) 852-0468
(919) 852-0598 (Fax)
www.simpsonengr.com
LICENSURE NO. C-2521

NORTH CAROLINA PROFESSIONAL SEAL 023906 ENGINEER MARK A. AVERETTE
6-5-2013

6/5/2013 3:48:48 PM G:\Projects\2011\U-2524 (Guilford Co)\Structures\Ramp A\Drawings\Final\U-2524_sd_rpa_bt5.dgn

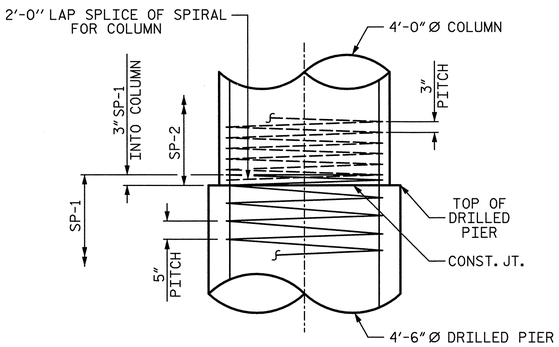

CONSTRUCTION JOINT DETAIL

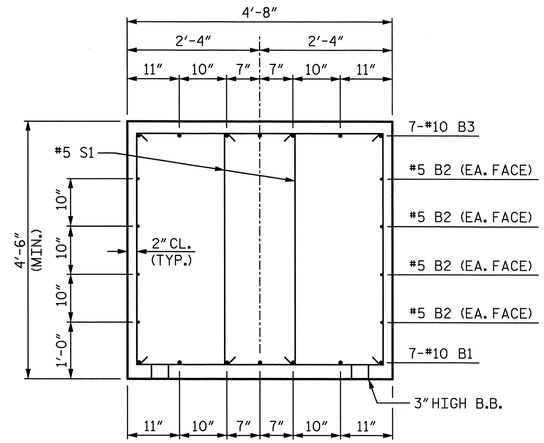

SECTION A-A

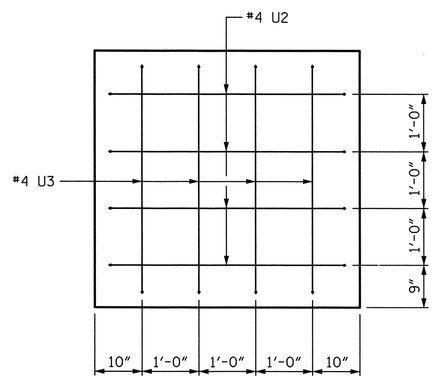

VIEW X-X

BAR TYPES

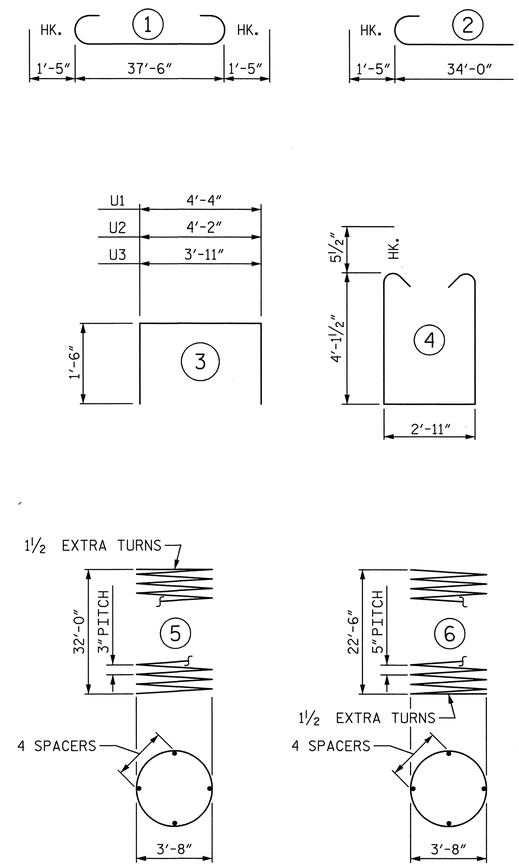

ALL BAR DIMENSIONS ARE OUT TO OUT

BILL OF MATERIAL

BENT 5

BAR	NO.	SIZE	TYPE	LENGTH	WEIGHT
B1	7	10	STR	37'-8"	1135
B2	8	5	STR	37'-8"	314
B3	7	10	1	40'-4"	1215
B4	7	4	STR	10'-9"	50
B5	7	4	STR	4'-5"	21
M1	54	10	STR	28'-7"	6642
S1	76	5	4	12'-1"	958
U1	39	4	3	7'-4"	191
U2	8	4	3	7'-2"	38
U3	8	4	3	6'-11"	37
V1	54	10	2	35'-5"	8230
SP-1	3	✱✱	6	636'-4"	1991
SP-2	3	✱	5	1480'-10"	2968

REINFORCING STEEL	18831 LB
SPIRAL COL. REINF. STEEL	4959 LB
CLASS "A" CONCRETE BREAKDOWN	
POUR 2 (COLUMNS)	44.4 CY
POUR 3 (CAP)	30.8 CY
TOTAL	75.2 CY
DRILLED PIERS:	
DRILLED PIER CONCRETE POUR 1 (DRILLED PIERS)	40.7 CY
4'-6" Ø DRILLED PIER NOT IN SOIL	37.0 LF
4'-6" Ø DRILLED PIER IN SOIL	32.0 LF
CSL TUBES	294.0 LF

✱✱ THE "SP-1" SPIRAL REINFORCING STEEL SHALL BE W31 OR D-31 COLD DRAWN WIRE OR #5 PLAIN OR DEFORMED BAR.

✱ THE "SP-2" SPIRAL REINFORCING STEEL SHALL BE W20 OR D-20 COLD DRAWN WIRE OR #4 PLAIN OR DEFORMED BAR.

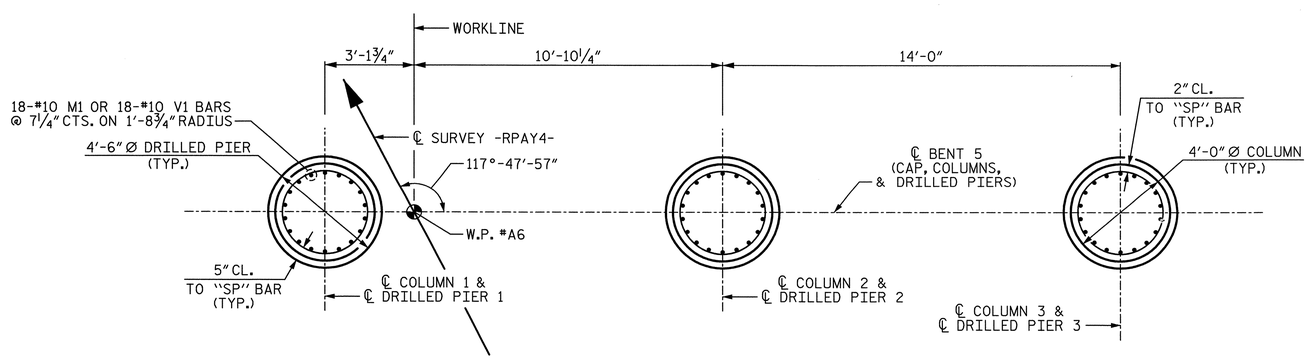

PLAN OF DRILLED PIERS & COLUMNS

(DIMENSIONS AND REINFORCING STEEL SHOWN ARE TYPICAL FOR EACH COLUMN AND DRILLED PIER)

PROJECT NO. U-2524C

GUILFORD COUNTY

STATION: 9+53.33 -RPAY4-

SHEET 2 OF 2

STATE OF NORTH CAROLINA
DEPARTMENT OF TRANSPORTATION
RALEIGH

SUBSTRUCTURE

BENT 5

-RAMP A-

PLANS PREPARED BY:

SIMPSON ENGINEERS & ASSOCIATES
5640 Dillard Drive
Suite 200
Cary, NC 27518
(919) 852-0468
(919) 852-0598 (Fax)
www.simpsonengr.com
LICENSURE NO. C-2521

NORTH CAROLINA PROFESSIONAL SEAL 023906 ENGINEER MARK A. AVERETTE
6-5-2013

REVISIONS								SHEET NO.
NO.	BY:	DATE:	NO.	BY:	DATE:			S-745
1			3					TOTAL SHEETS
2			4					836

DRAWN BY: R. SEALEY DATE: 4-13
CHECKED BY: M. AVERETTE DATE: 4-13
DESIGN ENGINEER OF RECORD: M. AVERETTE DATE: 4-13

6/5/2013 3:48:53 PM G:\Projects\2011\U-2524 (Guilford Co)\Structures\Ramp A\Drawings\Final\U-2524_sd_rpa_bt5.dgn

NOTES:

✱ INVERT ALTERNATE STIRRUPS.

STIRRUPS AND "U" BARS IN CAP MAY BE SHIFTED AS NECESSARY TO CLEAR ANCHOR BOLTS.

HOOKS ON "V" BARS MAY BE TURNED AS NECESSARY FOR PLACING REINFORCING STEEL.

ALL STEEL IN THE DRILLED PIERS IS INCLUDED IN THE PAY ITEMS FOR "REINFORCING STEEL" AND "SPIRAL COLUMN REINFORCING STEEL".

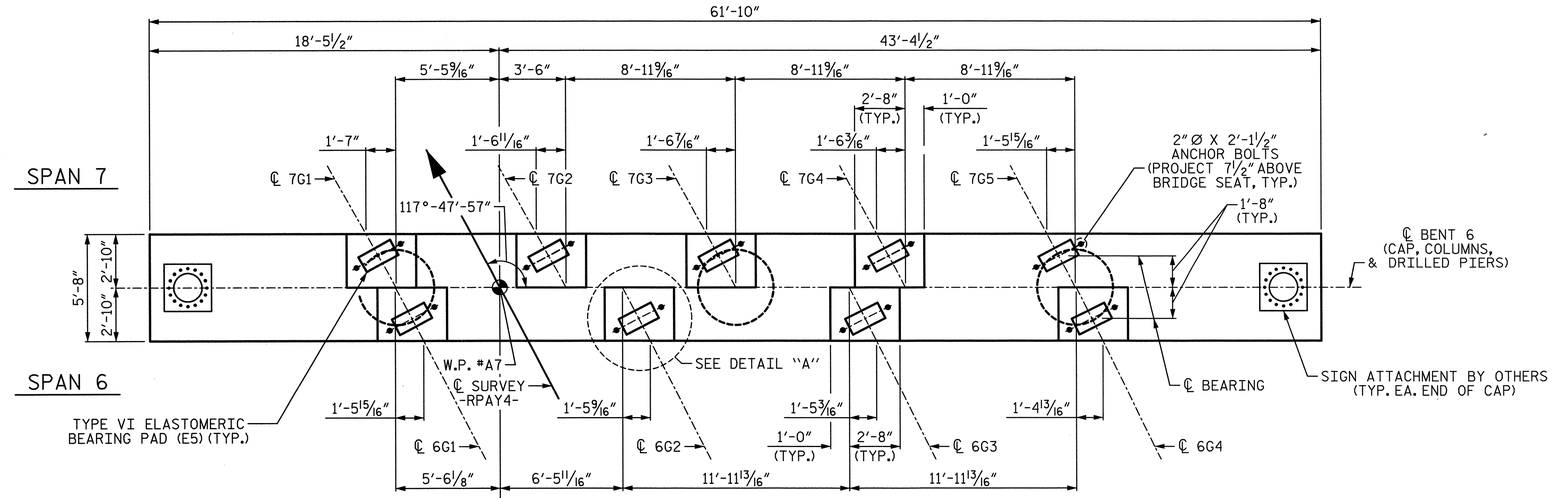

PLAN

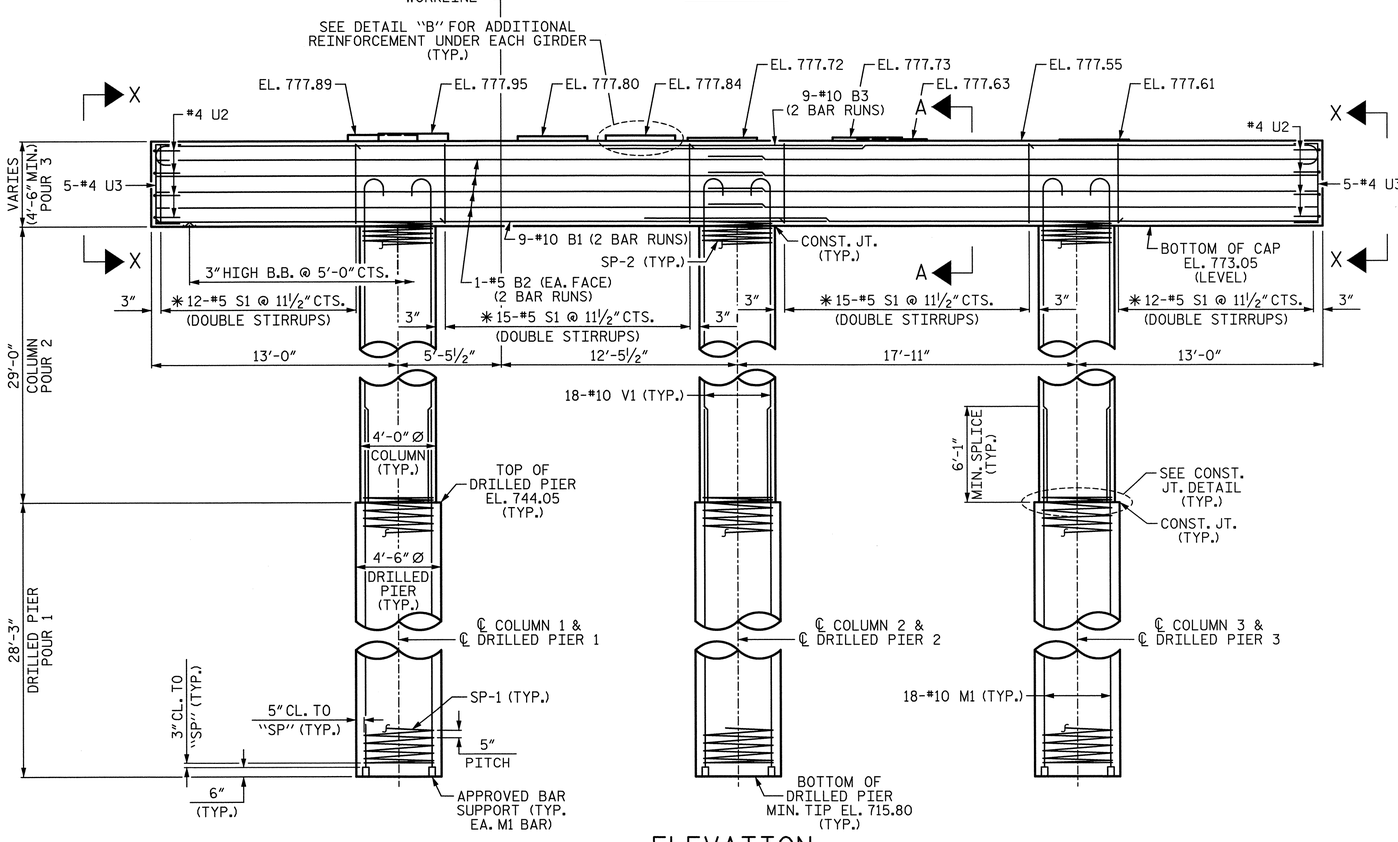

ELEVATION

SPLICE CHART
#10 B1 SPLICE LENGTH = 7'-11"
#5 B2 SPLICE LENGTH = 3'-0"
#10 B3 SPLICE LENGTH = 11'-1"

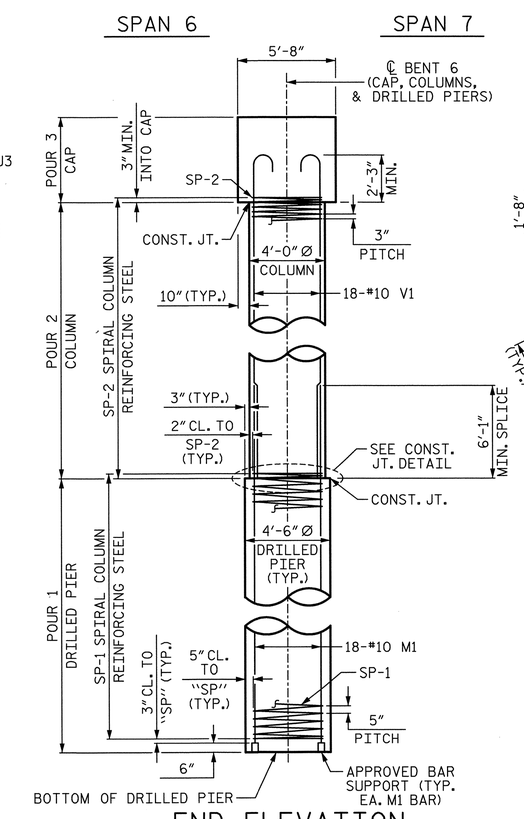

END ELEVATION

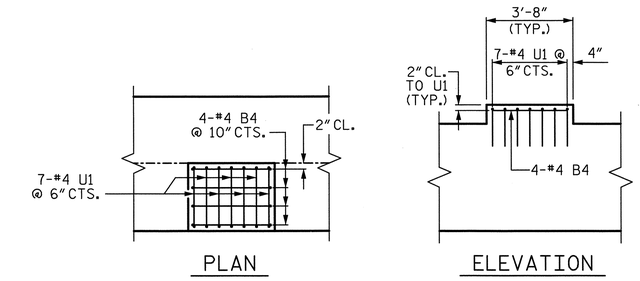

DETAIL "B"

TYP. UNDER EA. GIRDER
(OMIT #4 B4 @ GIRDERS 6G3, 6G4, 7G3, 7G4, & 7G5)

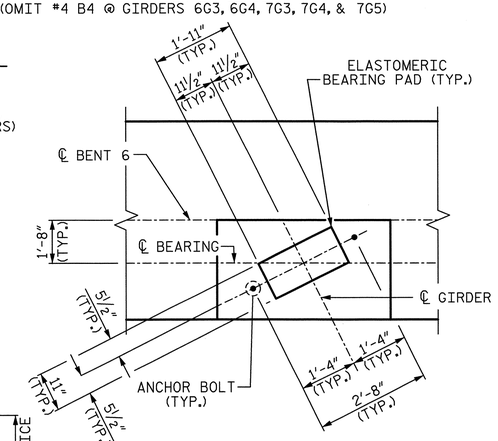

DETAIL "A"

TYP. EA. GIRDER
(SPAN 6 SIDE SHOWN, SPAN 7 SIDE SIMILAR)
(SEE PLAN FOR GIRDER LOCATIONS)

PROJECT NO. U-2524C

GUILFORD COUNTY

STATION: 9+53.33 -RPAY4-

SHEET 1 OF 2

STATE OF NORTH CAROLINA
DEPARTMENT OF TRANSPORTATION
RALEIGH

SUBSTRUCTURE

BENT 6

-RAMP A-

PLANS PREPARED BY:
SIMPSON ENGINEERS & ASSOCIATES
5640 Dillard Drive
Suite 200
Cary, NC 27518
(919) 852-0468
(919) 852-0598 (Fax)
www.simpsonengr.com
LICENSURE NO. C-2521

NORTH CAROLINA PROFESSIONAL ENGINEER SEAL 023906 MARK A. AVERETTE
6-5-2013

REVISIONS								SHEET NO.
NO.	BY:	DATE:	NO.	BY:	DATE:			S-746
1			3					TOTAL SHEETS
2			4					836

DRAWN BY:	R. SEALEY	DATE:	4-13
CHECKED BY:	M. AVERETTE	DATE:	4-13
DESIGN ENGINEER OF RECORD:	M. AVERETTE	DATE:	4-13

6/5/2013 3:48:59 PM G:\Projects\2011\U-2524 (Guilford Co)\Structures\Ramp A\Drawings\Final\U-2524_sd_rpa_bt6.dgn

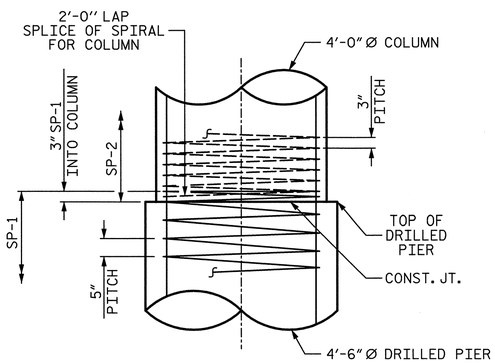

CONSTRUCTION JOINT DETAIL

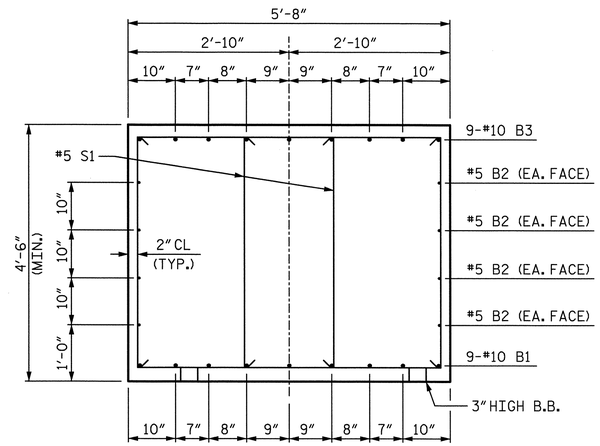

SECTION A-A

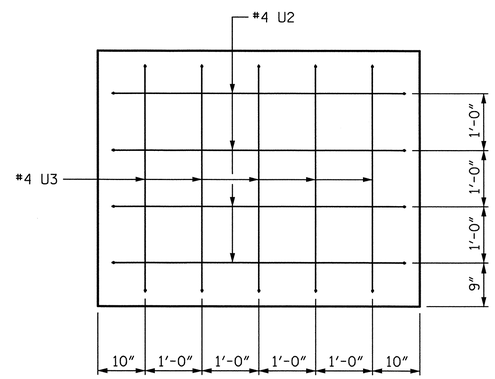

VIEW X-X

BAR TYPES

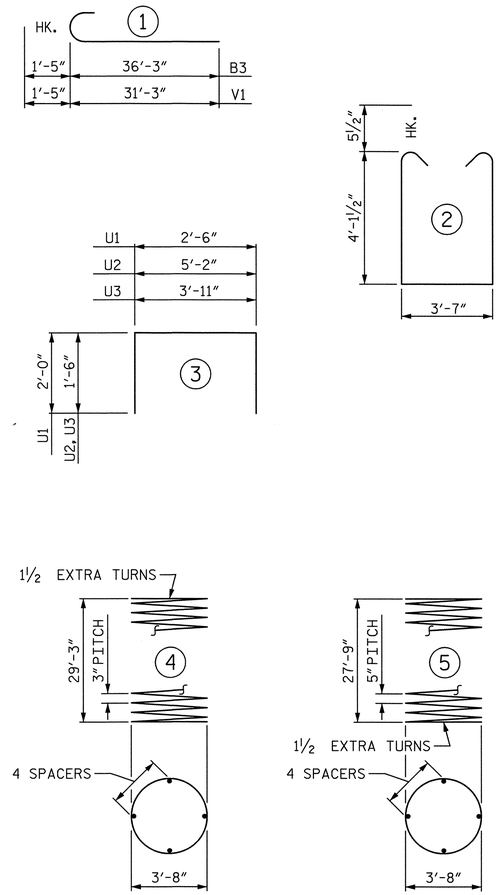

ALL BAR DIMENSIONS ARE OUT TO OUT

✱✱ THE "SP-1" SPIRAL REINFORCING STEEL SHALL BE W31 OR D-31 COLD DRAWN WIRE OR #5 PLAIN OR DEFORMED BAR.

✱ THE "SP-2" SPIRAL REINFORCING STEEL SHALL BE W20 OR D-20 COLD DRAWN WIRE OR #4 PLAIN OR DEFORMED BAR.

BILL OF MATERIAL

BENT 6

BAR	NO.	SIZE	TYPE	LENGTH	WEIGHT
B1	18	10	STR	34'-9"	2692
B2	16	5	STR	32'-3"	538
B3	18	10	1	37'-8"	2917
B4	16	4	STR	3'-4"	36
M1	54	10	STR	33'-10"	7862
S1	108	5	2	12'-9"	1436
U1	63	4	3	6'-6"	274
U2	8	4	3	8'-2"	44
U3	10	4	3	6'-11"	46
V1	54	10	1	32'-8"	7589
SP-1	3	✱✱	5	784'-1"	2453
SP-2	3	✱	4	1355'-7"	2717

REINFORCING STEEL	23434 LB
SPIRAL COL. REINF. STEEL	5170 LB
CLASS "A" CONCRETE BREAKDOWN	
POUR 2 (COLUMNS)	40.5 CY
POUR 3 (CAP)	59.1 CY
TOTAL	99.6 CY
DRILLED PIERS:	
DRILLED PIER CONCRETE POUR 1 (DRILLED PIERS)	50.0 CY
4'-6" Ø DRILLED PIER NOT IN SOIL	39.0 LF
4'-6" Ø DRILLED PIER IN SOIL	45.8 LF
CSL TUBES	357.0 LF

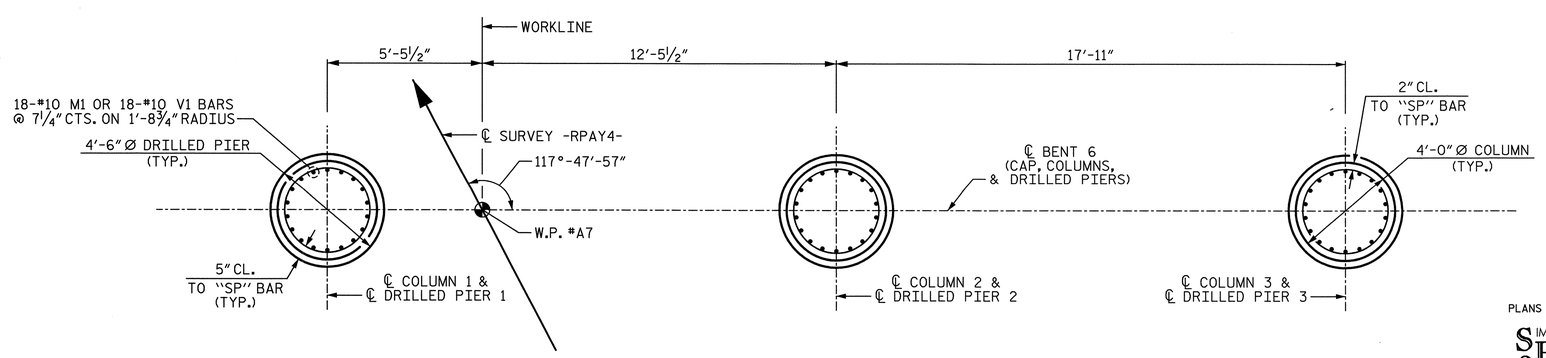

PLAN OF DRILLED PIERS & COLUMNS

(DIMENSIONS AND REINFORCING STEEL SHOWN ARE TYPICAL FOR EACH COLUMN AND DRILLED PIER)

PROJECT NO. U-2524C

GUILFORD COUNTY

STATION: 9+53.33 -RPAY4-

SHEET 2 OF 2

STATE OF NORTH CAROLINA
DEPARTMENT OF TRANSPORTATION
RALEIGH

SUBSTRUCTURE

BENT 6

-RAMP A-

PLANS PREPARED BY:

SIMPSON ENGINEERS & ASSOCIATES
5640 Dillard Drive
Suite 200
Cary, NC 27518
(919) 852-0468
(919) 852-0598 (Fax)
www.simpsonengr.com
LICENSURE NO. C-2521

NORTH CAROLINA PROFESSIONAL SEAL 023908 ENGINEER MARK A. AVERETTE
6-5-2013

REVISIONS								SHEET NO.
NO.	BY:	DATE:	NO.	BY:	DATE:			S-747
1			3					TOTAL SHEETS
2			4					836

DRAWN BY: R. SEALEY DATE: 4-13
CHECKED BY: M. AVERETTE DATE: 4-13
DESIGN ENGINEER OF RECORD: M. AVERETTE DATE: 4-13

6/5/2013 3:49:04 PM G:\Projects\2011\U-2524 (Guilford Co)\Structures\Ramp A\Drawings\Final\U-2524_sd_rpa_bt6.dgn

NOTES:

✱ INVERT ALTERNATE STIRRUPS.

STIRRUPS AND "U" BARS IN CAP MAY BE SHIFTED AS NECESSARY TO CLEAR ANCHOR BOLTS.

HOOKS ON "V" BARS MAY BE TURNED AS NECESSARY FOR PLACING REINFORCING STEEL.

ALL STEEL IN THE DRILLED PIERS IS INCLUDED IN THE PAY ITEMS FOR "REINFORCING STEEL" AND "SPIRAL COLUMN REINFORCING STEEL".

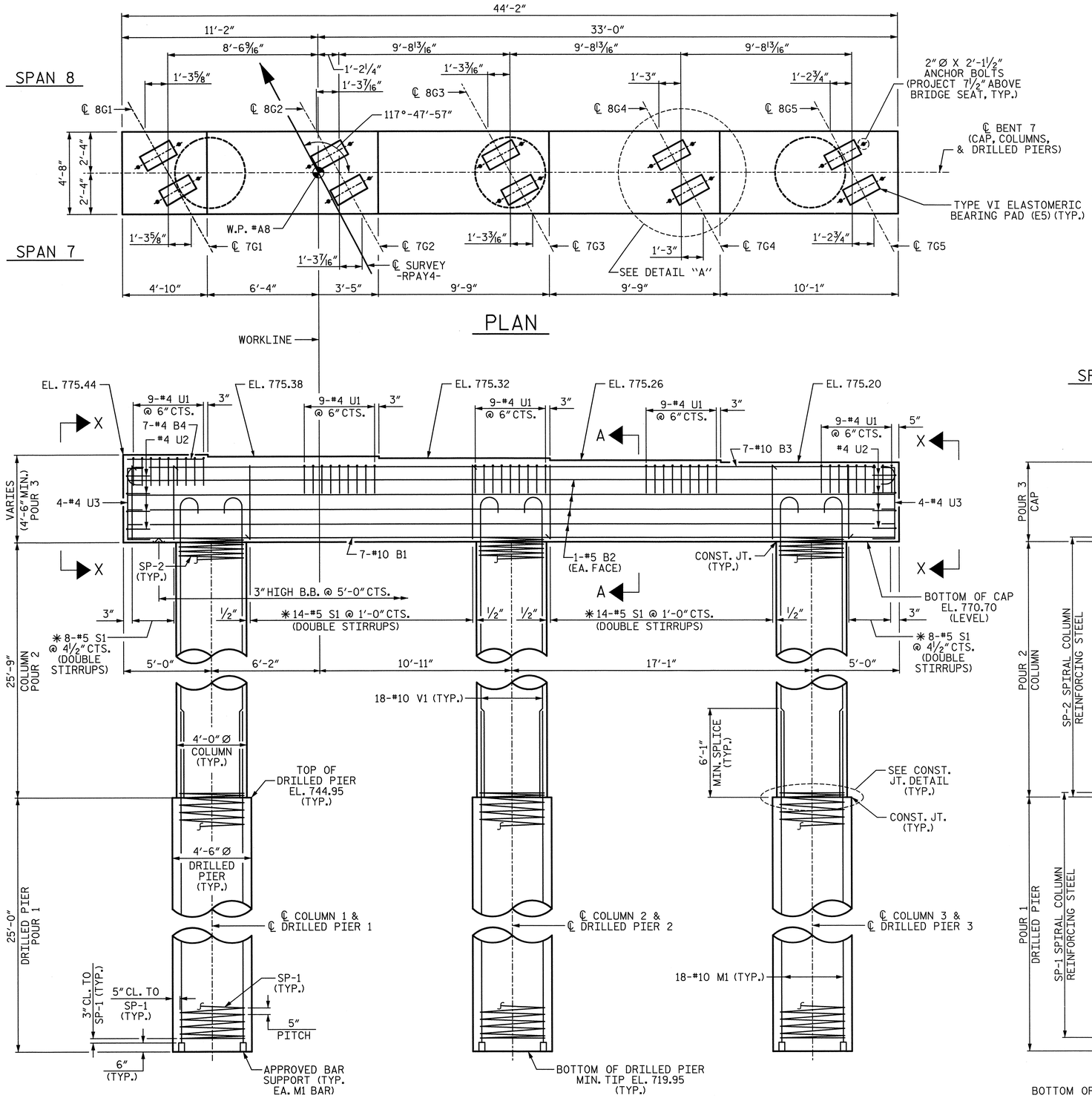

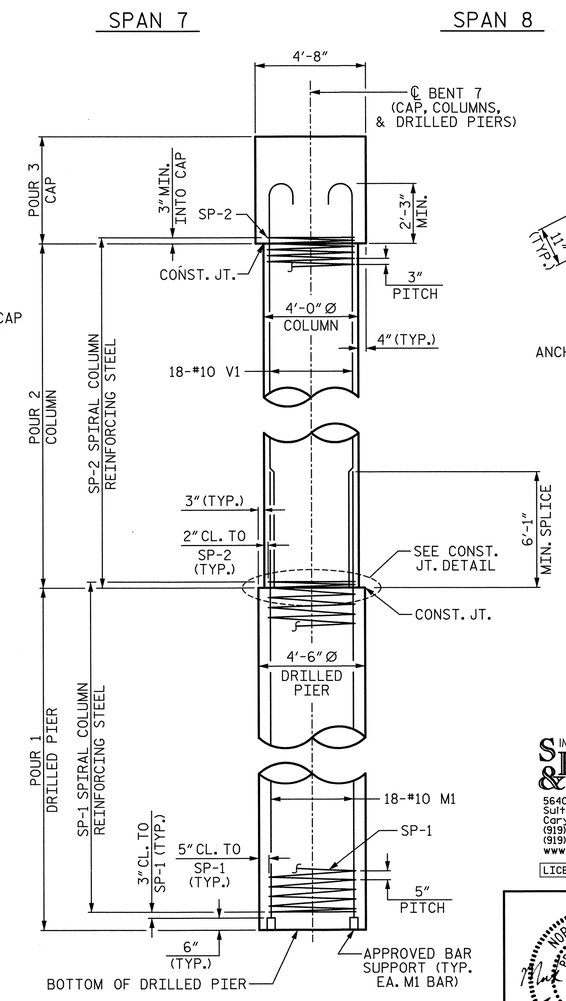

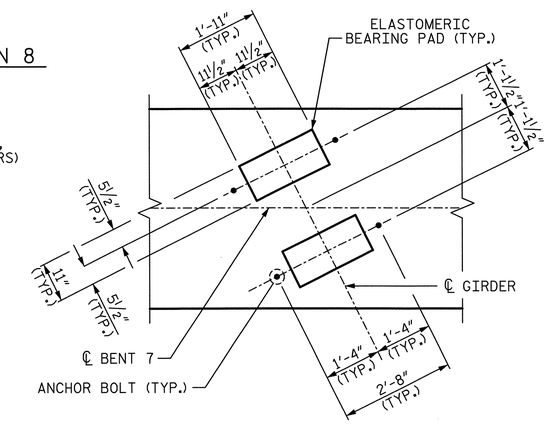

DETAIL "A"

TYP. EA. GIRDER

PROJECT NO. U-2524C

GUILFORD COUNTY

STATION: 9+53.33 -RPAY4-

SHEET 1 OF 2

SIMPSON ENGINEERS & ASSOCIATES
5640 Dillard Drive
Suite 200
Cary, NC 27518
(919) 852-0468
(919) 852-0598 (Fax)
www.simpsonengr.com
LICENSURE NO. C2521

NORTH CAROLINA PROFESSIONAL ENGINEER SEAL 023906 MARK A. AVERETTE 6-5-2013

STATE OF NORTH CAROLINA
DEPARTMENT OF TRANSPORTATION
RALEIGH

SUBSTRUCTURE

BENT 7

-RAMP A-

REVISIONS						SHEET NO.
NO.	BY:	DATE:	NO.	BY:	DATE:	S-748
1			3			TOTAL SHEETS
2			4			836

DRAWN BY: R. SEALEY DATE: 4-13
CHECKED BY: M. AVERETTE DATE: 4-13
DESIGN ENGINEER OF RECORD: M. AVERETTE DATE: 4-13

6/5/2013 3:49:09 PM G:\Projects\2011\U-2524 (Guilford Co)\Structures\Ramp A\Drawings\Final\U-2524_sd_rpa_bt7.dgn

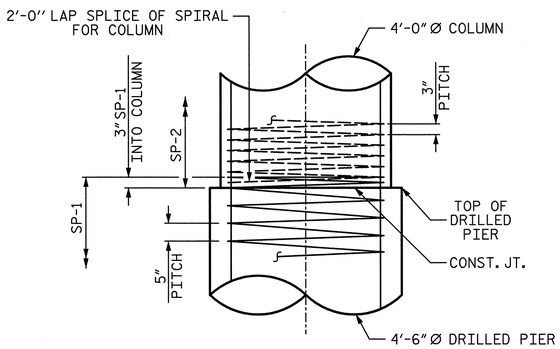

CONSTRUCTION JOINT DETAIL

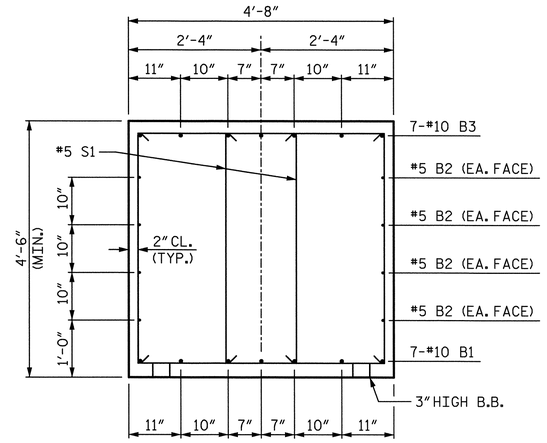

SECTION A-A

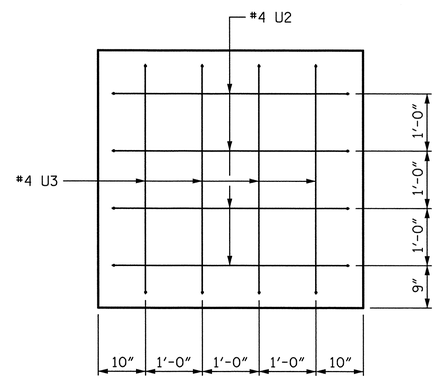

VIEW X-X

BAR TYPES

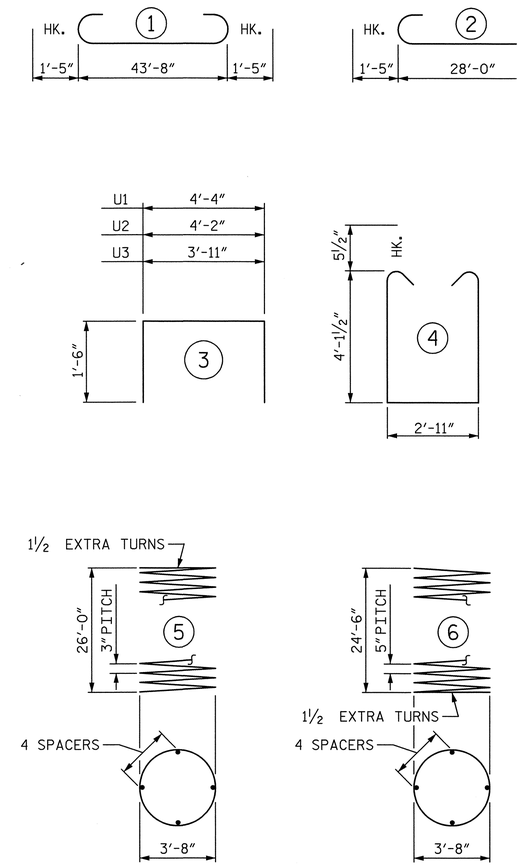

ALL BAR DIMENSIONS ARE OUT TO OUT

✳ THE "SP-1" SPIRAL REINFORCING STEEL SHALL BE W31 OR D-31 COLD DRAWN WIRE OR #5 PLAIN OR DEFORMED BAR.

✳✳ THE "SP-2" SPIRAL REINFORCING STEEL SHALL BE W20 OR D-20 COLD DRAWN WIRE OR #4 PLAIN OR DEFORMED BAR.

BILL OF MATERIAL

BENT 7

BAR	NO.	SIZE	TYPE	LENGTH	WEIGHT
B1	7	10	STR	43'-10"	1320
B2	8	5	STR	43'-10"	366
B3	7	10	1	46'-6"	1401
B4	7	4	STR	4'-5"	21
M1	54	10	STR	30'-7"	7106
S1	88	5	4	12'-1"	1109
U1	45	4	3	7'-4"	220
U2	8	4	3	7'-2"	38
U3	8	4	3	6'-11"	37
V1	54	10	2	29'-5"	6835
SP-1	3	✳✳	6	693'-2"	2169
SP-2	3	✳	5	1207'-6"	2420

REINFORCING STEEL	18453 LB
SPIRAL COL. REINF. STEEL	4589 LB
CLASS "A" CONCRETE BREAKDOWN	
POUR 2 (COLUMNS)	36.0 CY
POUR 3 (CAP)	35.2 CY
TOTAL	71.2 CY
DRILLED PIERS:	
DRILLED PIER CONCRETE POUR 1 (DRILLED PIERS)	44.2 CY
4'-6" Ø DRILLED PIER NOT IN SOIL	44.0 LF
4'-6" Ø DRILLED PIER IN SOIL	31.0 LF
CSL TUBES	318.0 LF

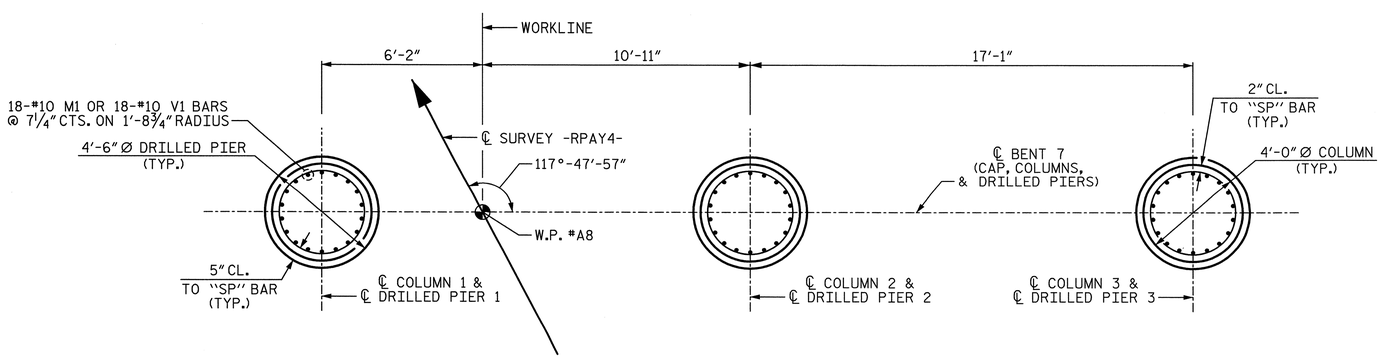

PLAN OF DRILLED PIERS & COLUMNS

(DIMENSIONS AND REINFORCING STEEL SHOWN ARE TYPICAL FOR EACH COLUMN AND DRILLED PIER)

PROJECT NO. U-2524C

GUILFORD COUNTY

STATION: 9+53.33 -RPAY4-

SHEET 2 OF 2

STATE OF NORTH CAROLINA
DEPARTMENT OF TRANSPORTATION
RALEIGH

SUBSTRUCTURE

BENT 7

-RAMP A-

REVISIONS						SHEET NO.
NO.	BY:	DATE:	NO.	BY:	DATE:	S-749
1			3			TOTAL SHEETS
2			4			836

PLANS PREPARED BY:
SIMPSON ENGINEERS & ASSOCIATES
5640 Dillard Drive
Suite 200
Cary, NC 27518
(919) 852-0468
(919) 852-0598 (Fax)
www.simpsonengr.com
LICENSURE NO. C-2521

NORTH CAROLINA PROFESSIONAL SEAL 023906 ENGINEER MARK A. AVERETTE
6-5-2013

DRAWN BY: R. SEALEY DATE: 4-13
CHECKED BY: M. AVERETTE DATE: 4-13
DESIGN ENGINEER OF RECORD: M. AVERETTE DATE: 4-13

6/5/2013 3:49:14 PM G:\Projects\2011\U-2524 (Guilford Co)\Structures\Ramp A\Drawings\Final\U-2524_sd_rpa_bt7.dgn

NOTES:

✱ INVERT ALTERNATE STIRRUPS.

STIRRUPS AND "U" BARS IN CAP MAY BE SHIFTED AS NECESSARY TO CLEAR ANCHOR BOLTS.

HOOKS ON "V" BARS MAY BE TURNED AS NECESSARY FOR PLACING REINFORCING STEEL.

ALL STEEL IN THE DRILLED PIERS IS INCLUDED IN THE PAY ITEMS FOR "REINFORCING STEEL" AND "SPIRAL COLUMN REINFORCING STEEL".

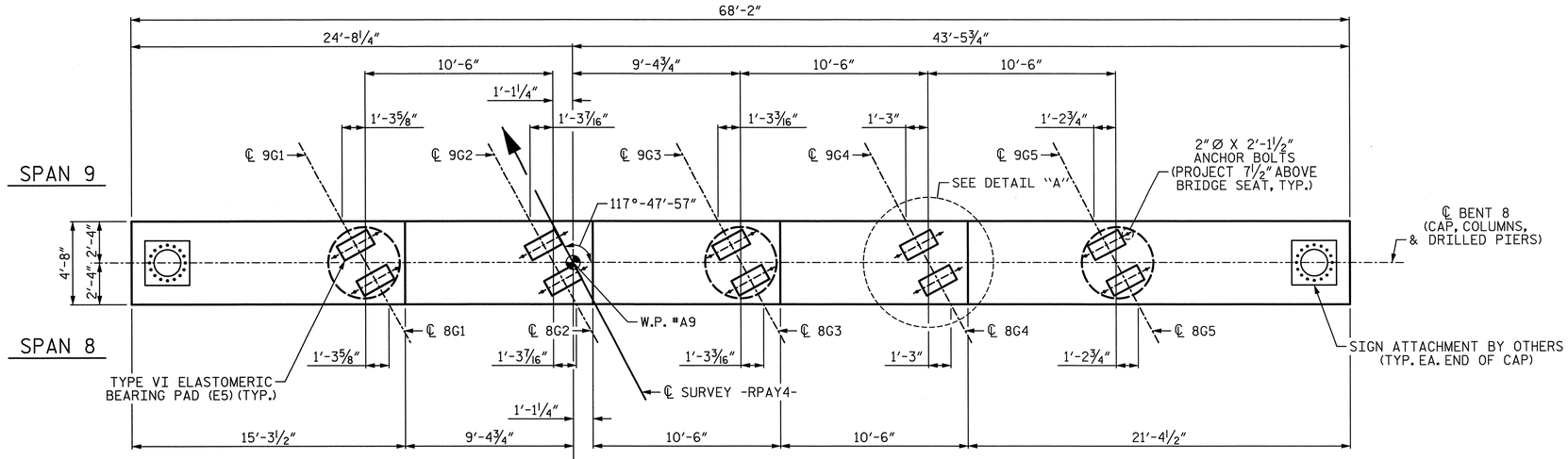

PLAN

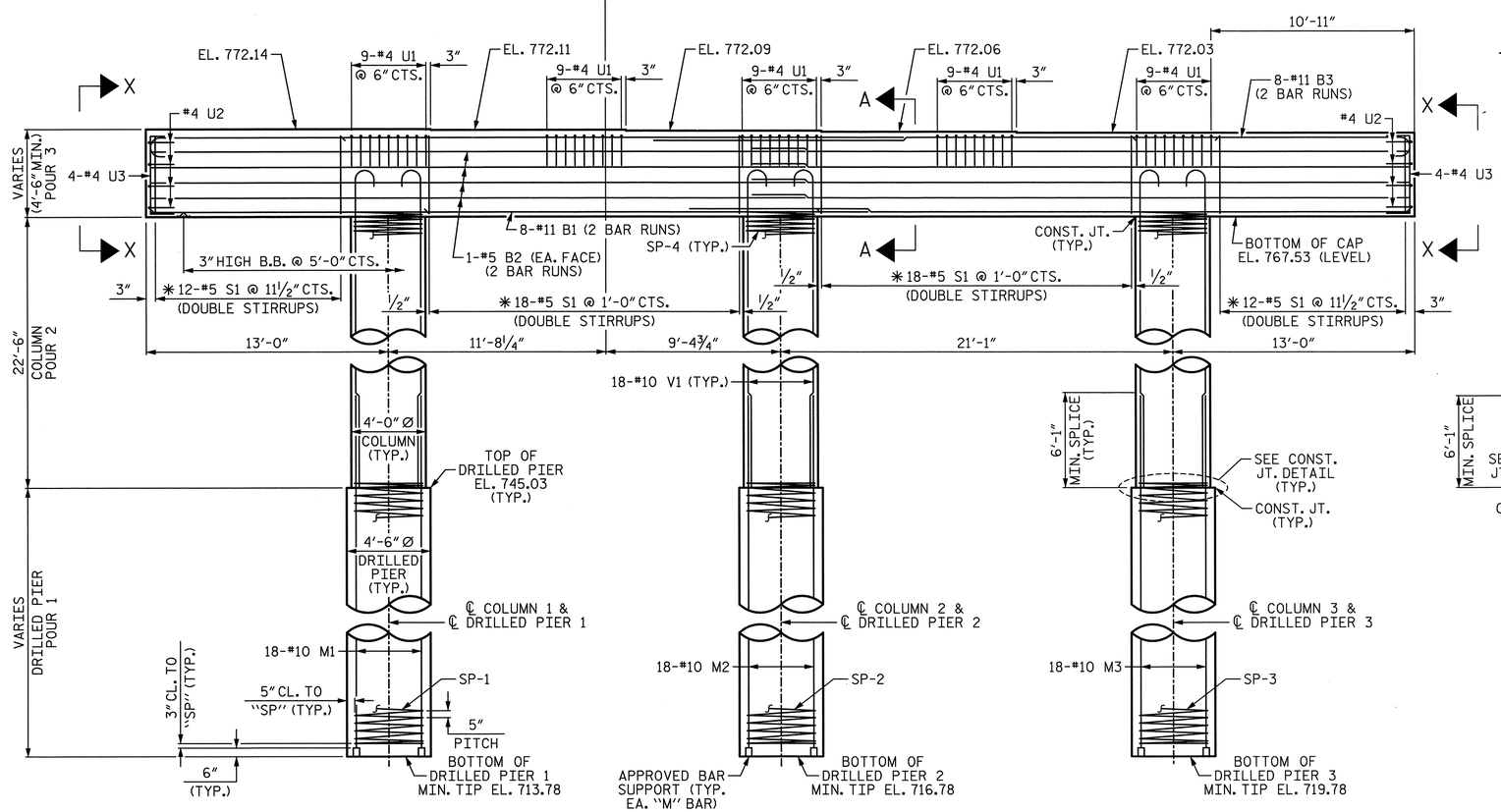

ELEVATION

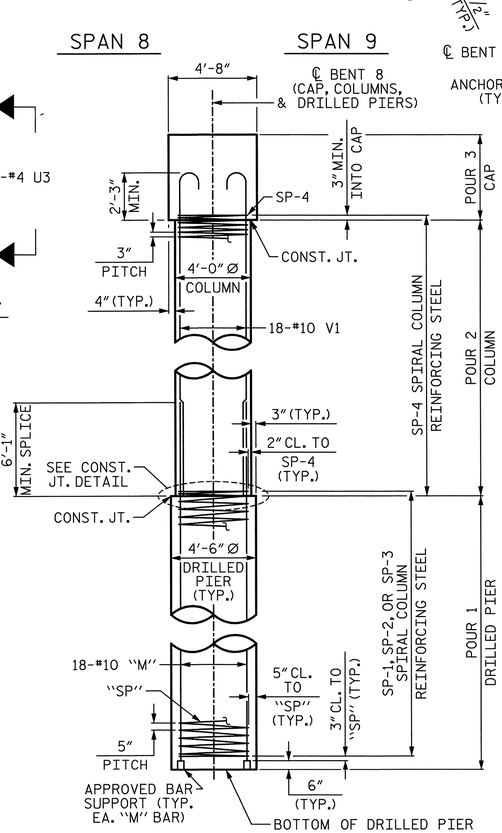

END ELEVATION

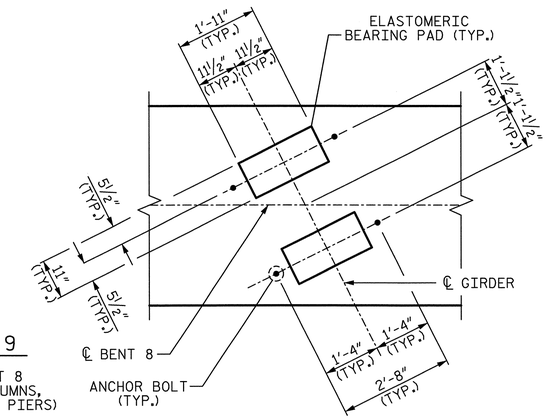

DETAIL "A"

TYP. EA. GIRDER

SPLICE CHART
#11 B1 SPLICE LENGTH = 9'-9"
#5 B2 SPLICE LENGTH = 3'-0"
#11 B3 SPLICE LENGTH = 13'-7"

PROJECT NO. U-2524C

GUILFORD COUNTY

STATION: 9+53.33 -RPAY4-

SHEET 1 OF 2

STATE OF NORTH CAROLINA
DEPARTMENT OF TRANSPORTATION
RALEIGH

SUBSTRUCTURE

BENT 8

-RAMP A-

PLANS PREPARED BY:

SIMPSON ENGINEERS & ASSOCIATES
5640 Dillard Drive
Suite 200
Cary, NC 27518
(919) 852-0468
(919) 852-0598 (Fax)
www.simpsonengr.com
LICENSURE NO. C-2521

NORTH CAROLINA PROFESSIONAL SEAL 023908 ENGINEER MARK A. AVERETTE
6-5-2013

REVISIONS						SHEET NO.
NO.	BY:	DATE:	NO.	BY:	DATE:	S-750
1			3			TOTAL SHEETS
2			4			836

DRAWN BY: R. SEALEY DATE: 4-13
CHECKED BY: M. AVERETTE DATE: 4-13
DESIGN ENGINEER OF RECORD: M. AVERETTE DATE: 4-13

6/5/2013 3:49:19 PM G:\Projects\2011\U-2524 (Guilford Co)\Structures\Ramp A\Drawings\Final\U-2524_sd_rpa_bt8.dgn

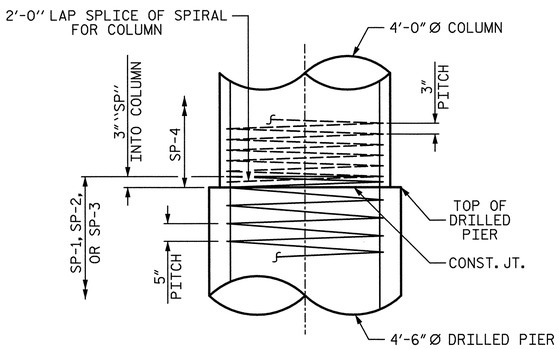

CONSTRUCTION JOINT DETAIL

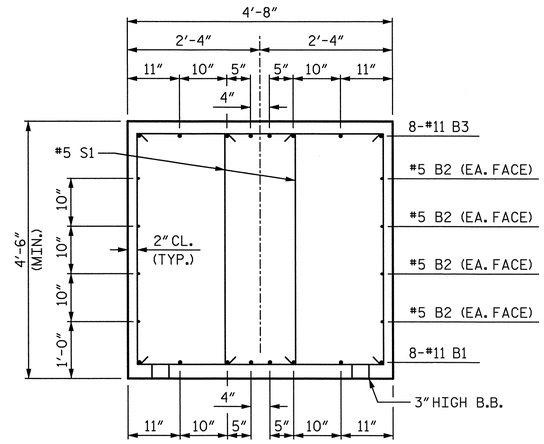

SECTION A-A

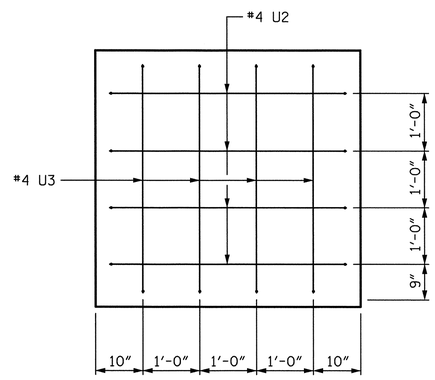

VIEW X-X

BAR TYPES

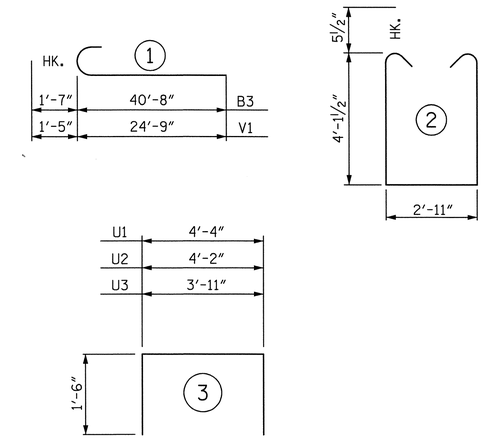

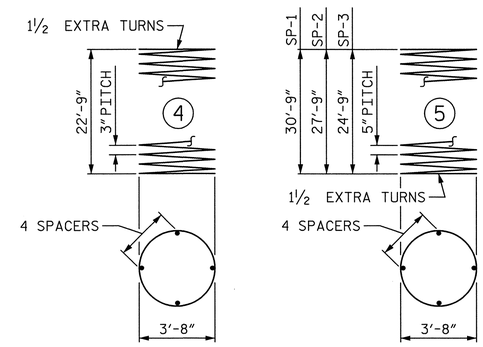

ALL BAR DIMENSIONS ARE OUT TO OUT

BILL OF MATERIAL

BENT 8

BAR	NO.	SIZE	TYPE	LENGTH	WEIGHT
B1	16	11	STR	38'-10"	3301
B2	16	5	STR	35'-5"	591
B3	16	11	1	42'-3"	3592
M1	18	10	STR	36'-10"	2853
M2	18	10	STR	33'-10"	2621
M3	18	10	STR	30'-10"	2388
S1	120	5	2	12'-1"	1512
U1	45	4	3	7'-4"	220
U2	8	4	3	7'-2"	38
U3	8	4	3	6'-11"	37
V1	54	10	1	26'-2"	6081
SP-1	1	✱✱	5	863'-8"	901
SP-2	1	✱✱	5	784'-1"	818
SP-3	1	✱✱	5	693'-2"	723
SP-4	3	✱	4	1059'-5"	2123

REINFORCING STEEL	23234 LB
SPIRAL COL. REINF. STEEL	4565 LB
CLASS "A" CONCRETE BREAKDOWN	
POUR 2 (COLUMNS)	31.5 CY
POUR 3 (CAP)	53.7 CY
TOTAL	85.2 CY
DRILLED PIERS:	
DRILLED PIER CONCRETE POUR 1 (DRILLED PIERS)	50.0 CY
4'-6" Ø DRILLED PIER NOT IN SOIL	36.0 LF
4'-6" Ø DRILLED PIER IN SOIL	48.8 LF
CSL TUBES	357.0 LF

✱✱ THE "SP-1", "SP-2", AND "SP-3" SPIRAL REINFORCING STEEL SHALL BE W31 OR D-31 COLD DRAWN WIRE OR #5 PLAIN OR DEFORMED BAR.

✱ THE "SP-4" SPIRAL REINFORCING STEEL SHALL BE W20 OR D-20 COLD DRAWN WIRE OR #4 PLAIN OR DEFORMED BAR.

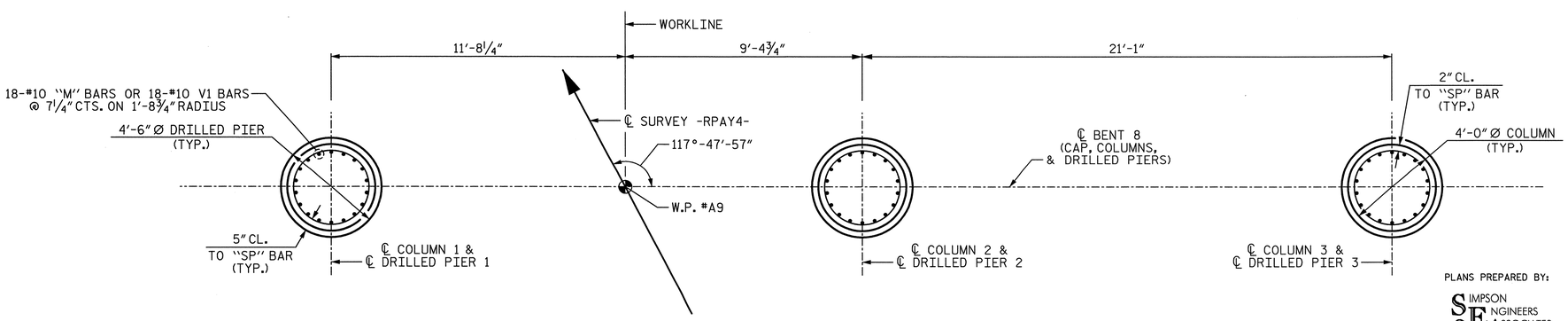

PLAN OF DRILLED PIERS & COLUMNS

(DIMENSIONS AND REINFORCING STEEL SHOWN ARE TYPICAL FOR EACH COLUMN AND DRILLED PIER)

PROJECT NO. U-2524C

GUILFORD COUNTY

STATION: 9+53.33 -RPAY4-

SHEET 2 OF 2

STATE OF NORTH CAROLINA
DEPARTMENT OF TRANSPORTATION
RALEIGH

SUBSTRUCTURE

BENT 8

-RAMP A-

PLANS PREPARED BY:

SIMPSON ENGINEERS & ASSOCIATES
5640 Dillard Drive
Suite 200
Cary, NC 27518
(919) 852-0468
(919) 852-0598 (Fax)
www.simpsonengr.com
LICENSURE NO. C-2521

NORTH CAROLINA PROFESSIONAL SEAL 023906 ENGINEER MARK A. AVERETTE
6-5-2013

REVISIONS								SHEET NO.
NO.	BY:	DATE:	NO.	BY:	DATE:			S-751
1			3					TOTAL SHEETS
2			4					836

DRAWN BY: R. SEALEY DATE: 4-13
CHECKED BY: M. AVERETTE DATE: 4-13
DESIGN ENGINEER OF RECORD: M. AVERETTE DATE: 4-13

6/5/2013 3:49:24 PM G:\Projects\2011\U-2524 (Guilford Co)\Structures\Ramp A\Drawings\Final\U-2524_sd_rpa_bt8.dgn

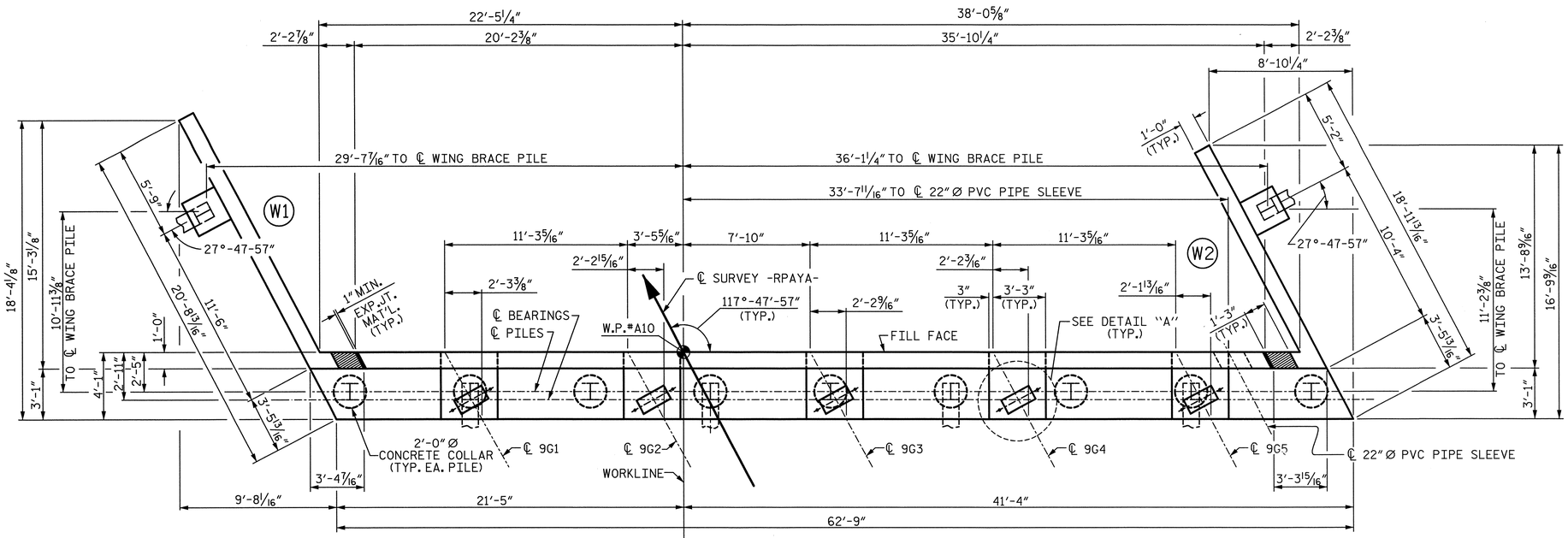

PLAN

NOTES:

STIRRUPS AND "U" BARS IN CAP MAY BE SHIFTED AS NECESSARY TO CLEAR ANCHOR BOLTS.

BACKWALL SHALL BE PLACED BEFORE APPLYING THE EPOXY PROTECTIVE COATING.

THE CONCRETE IN THE SHADED AREA OF THE WING SHALL BE POURED AFTER THE BARRIER RAIL IS CAST IF SLIP FORMING IS USED.

THE TOP SURFACE AREAS OF THE END BENT CAPS SHALL BE CURED IN ACCORDANCE WITH THE STANDARD SPECIFICATIONS EXCEPT THE MEMBRANE CURING COMPOUND METHOD SHALL NOT BE USED.

THE TOP SURFACE OF THE CAP EXCEPT THE BRIDGE SEAT BUILDUPS SHALL BE SLOPED TRANSVERSELY FROM THE FILL FACE TO THE BACK FACE AT THE RATE OF 2%.

THE CONTRACTOR SHALL PROVIDE FOR INSTALLATION OF THE 4" DIAMETER DRAIN PIPE THROUGH THE WING WALL AS REQUIRED FOR REINFORCED BRIDGE APPROACH FILLS, SEE THE ROADWAY PLANS. REINFORCING STEEL IN THE WING WALL MAY BE SHIFTED AS NECESSARY TO CLEAR THE DRAIN PIPE.

SEE GENERAL DRAWING "FOUNDATION LAYOUT" FOR ADDITIONAL NOTES FOR DRIVING PILES.

REINFORCING STEEL IN BACKWALL SHALL BE FIELD BENT AS NECESSARY FOR INSTALLATION OF THE 22" Ø PVC PIPE SLEEVE.

SEE "CLOSED DRAINAGE SYSTEM DETAILS" SHEETS FOR 22" Ø PVC PIPE SLEEVE DETAILS.

SPLICE CHART

#10 B1 SPLICE LENGTH = 7'-11"
#4 B2 SPLICE LENGTH = 2'-5"
#9 B4 SPLICE LENGTH = 8'-9"
#5 B7 SPLICE LENGTH = 3'-0"
#4 K1 SPLICE LENGTH = 2'-5"

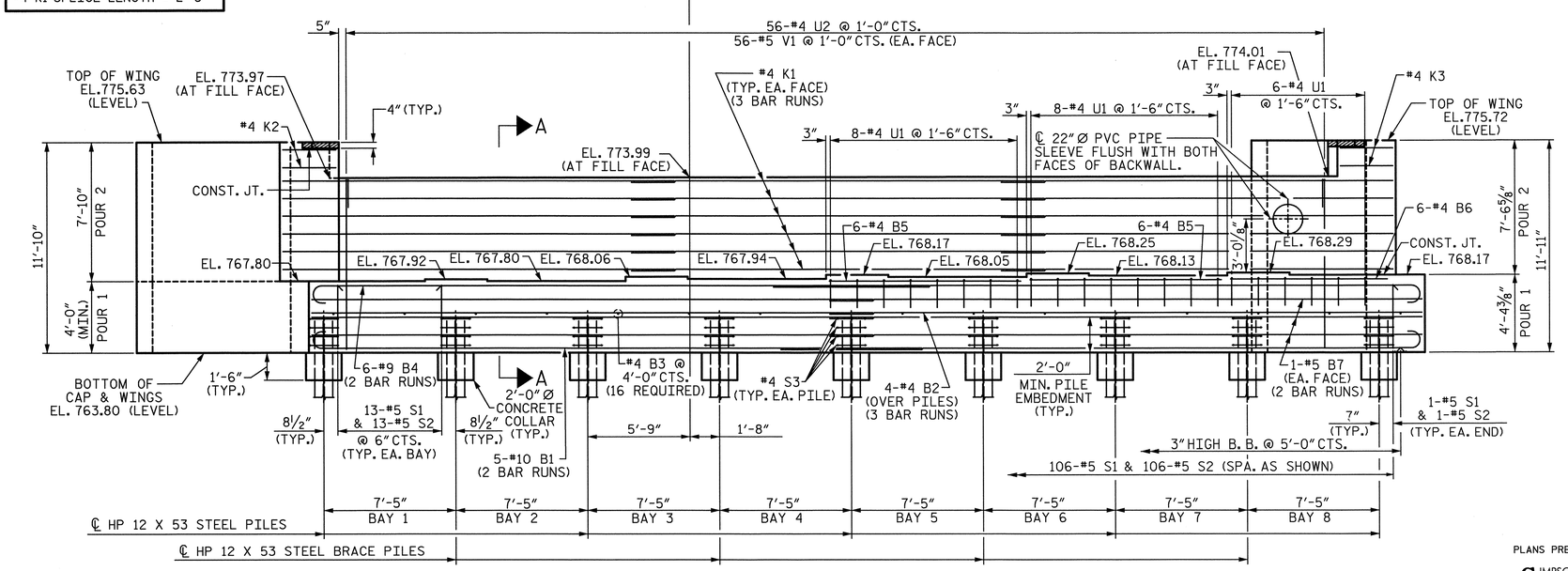

ELEVATION

FOR CLARITY, WING BRACE PILE NOT SHOWN

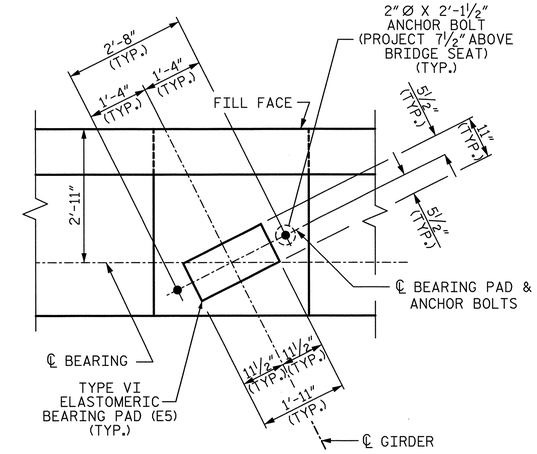

DETAIL "A"

TYP. EA. GIRDER

PROJECT NO. U-2524C

GUILFORD COUNTY

STATION: 9+53.33 -RPAY4-

SHEET 1 OF 3

STATE OF NORTH CAROLINA
DEPARTMENT OF TRANSPORTATION
RALEIGH

SUPERSTRUCTURE

END BENT 2

-RAMP A-

REVISIONS						SHEET NO.
NO.	BY:	DATE:	NO.	BY:	DATE:	S-752
1			3			TOTAL SHEETS
2			4			836

PLANS PREPARED BY:

SIMPSON ENGINEERS & ASSOCIATES
5640 Dillard Drive
Suite 200
Cary, NC 27518
(919) 852-0468
(919) 852-0598 (Fax)
www.simpsonengr.com
LICENSURE NO. C-2521

NORTH CAROLINA PROFESSIONAL ENGINEER SEAL 023908 MARK A. AVERETTE
6-5-2013

DRAWN BY:	R. SEALEY	DATE:	4-13
CHECKED BY:	M. AVERETTE	DATE:	4-13
DESIGN ENGINEER OF RECORD:	M. AVERETTE	DATE:	4-13

6/5/2013 3:49:29 PM G:\Projects\2011\U-2524 (Guilford Co)\Structures\Ramp A\Drawings\Final\U-2524_sd_rpa_eb12.dgn

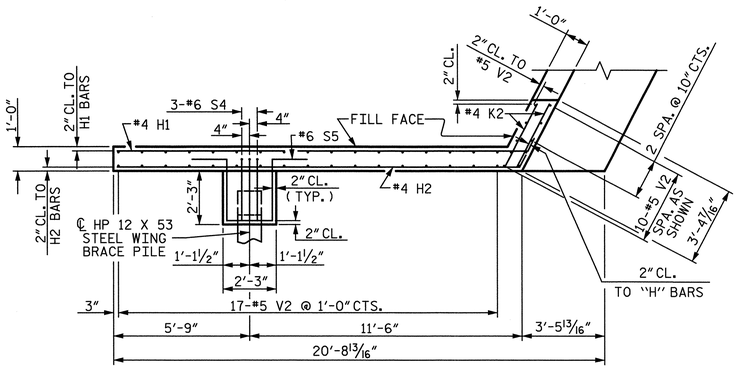

PLAN OF WING (W1)

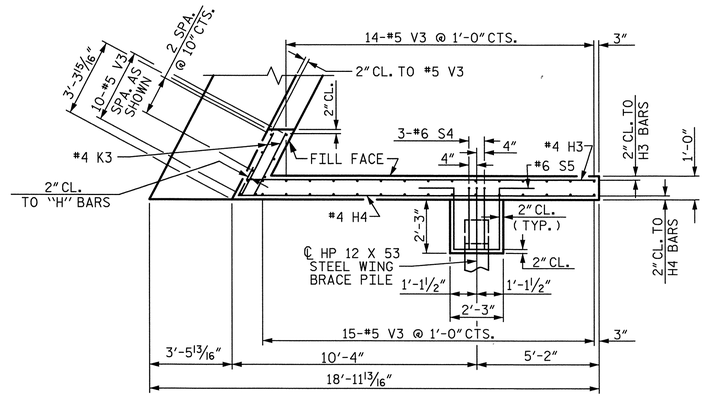

PLAN OF WING (W2)

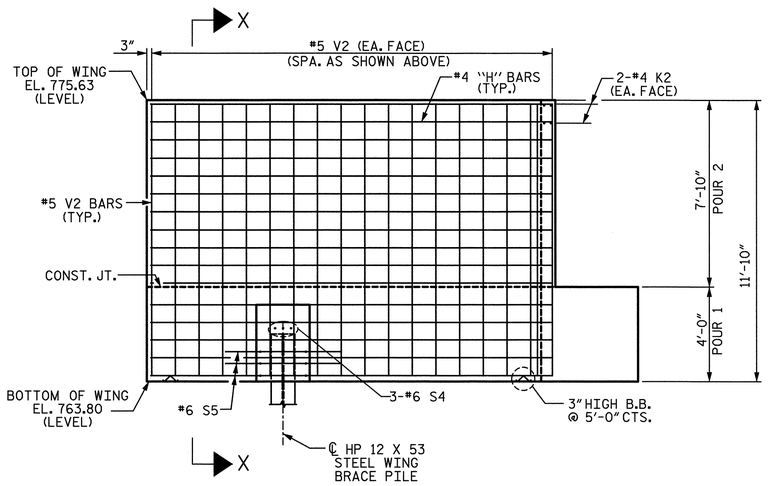

ELEVATION OF WING (W1)

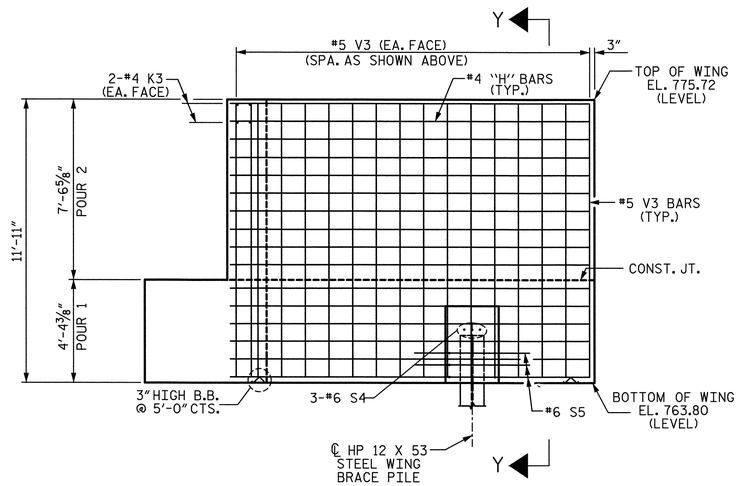

ELEVATION OF WING (W2)

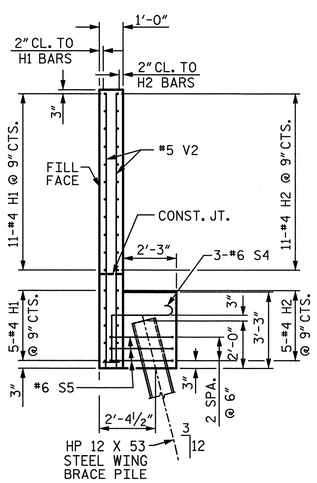

SECTION X-X

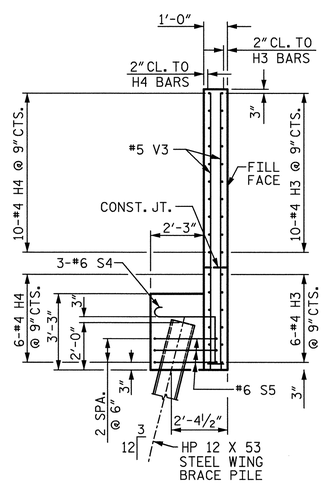

SECTION Y-Y

PROJECT NO. U-2524C

GUILFORD COUNTY

STATION: 9+53.33 -RPAY4-

SHEET 2 OF 3

STATE OF NORTH CAROLINA
DEPARTMENT OF TRANSPORTATION
RALEIGH

SUBSTRUCTURE

END BENT 2

-RAMP A-

REVISIONS						SHEET NO.
NO.	BY:	DATE:	NO.	BY:	DATE:	S-753
1			3			TOTAL SHEETS
2			4			836

PLANS PREPARED BY:

SIMPSON ENGINEERS & ASSOCIATES
5640 Dillard Drive
Suite 200
Cary, NC 27518
(919) 852-0468
(919) 852-0598 (Fax)
www.simpsonengr.com
LICENSURE NO. C-2521

NORTH CAROLINA PROFESSIONAL SEAL 023908 ENGINEER MARK A. AVERETTE
6-5-2013

DRAWN BY:	R. SEALEY	DATE:	4-13
CHECKED BY:	M. AVERETTE	DATE:	4-13
DESIGN ENGINEER OF RECORD:	M. AVERETTE	DATE:	4-13

6/5/2013 3:49:34 PM G:\Projects\2011\U-2524 (Guilford Co)\Structures\Ramp A\Drawings\Final\U-2524_sd_rpa_eb+2.dgn

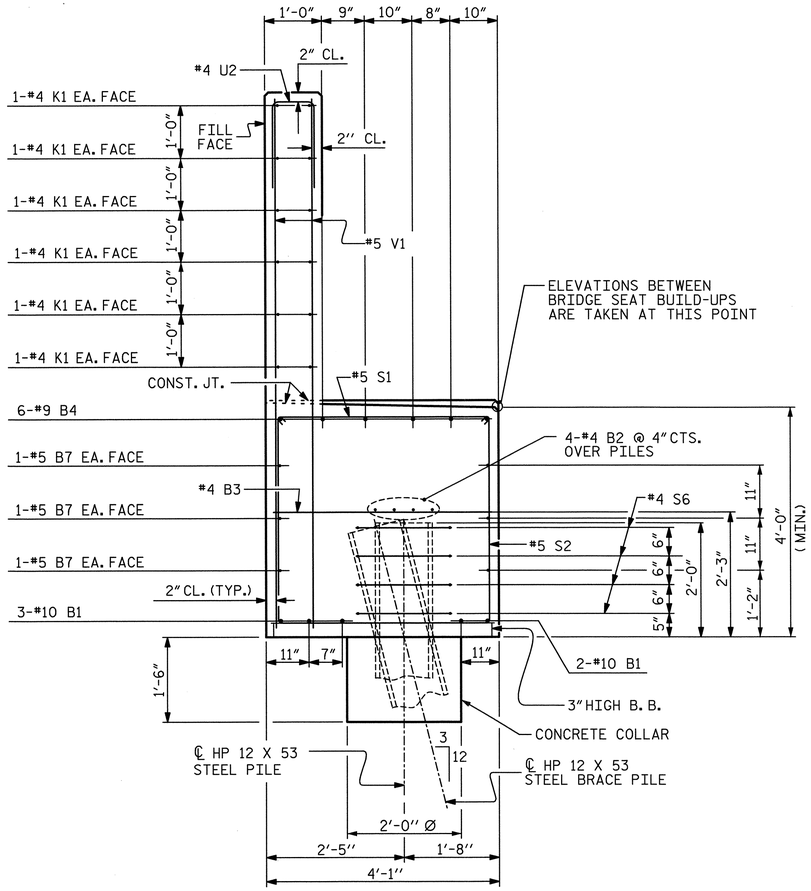

SECTION A-A

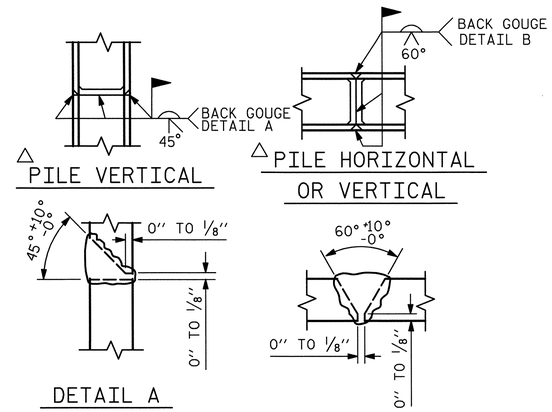

△ POSITION OF PILE DURING WELDING.

PILE SPLICE DETAILS

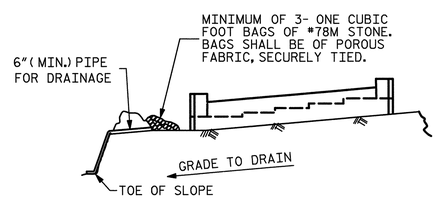

BAGGED STONE AND PIPE SHALL BE PLACED IMMEDIATELY AFTER COMPLETION OF END BENT EXCAVATION. PIPE MAY BE EITHER CONCRETE, CORRUGATED STEEL, CORRUGATED ALUMINUM ALLOY, OR CORRUGATED PLASTIC. PERFORATED PIPE WILL NOT BE ALLOWED.

BAGGED STONE SHALL REMAIN IN PLACE UNTIL THE ENGINEER DIRECTS THAT IT BE REMOVED. THE CONTRACTOR SHALL REMOVE AND DISPOSE OF SILT ACCUMULATIONS AT BAGGED STONE WHEN SO DIRECTED BY THE ENGINEER. BAGS SHALL BE REMOVED AND REPLACED WHENEVER THE ENGINEER DETERMINES THAT THEY HAVE DETERIORATED AND LOST THEIR EFFECTIVENESS.

NO SEPARATE PAYMENT WILL BE MADE FOR THIS WORK AND THE ENTIRE COST OF THIS WORK SHALL BE INCLUDED IN THE UNIT CONTRACT PRICE BID FOR THE SEVERAL PAY ITEMS.

TEMPORARY DRAINAGE AT END BENT

BAR TYPES

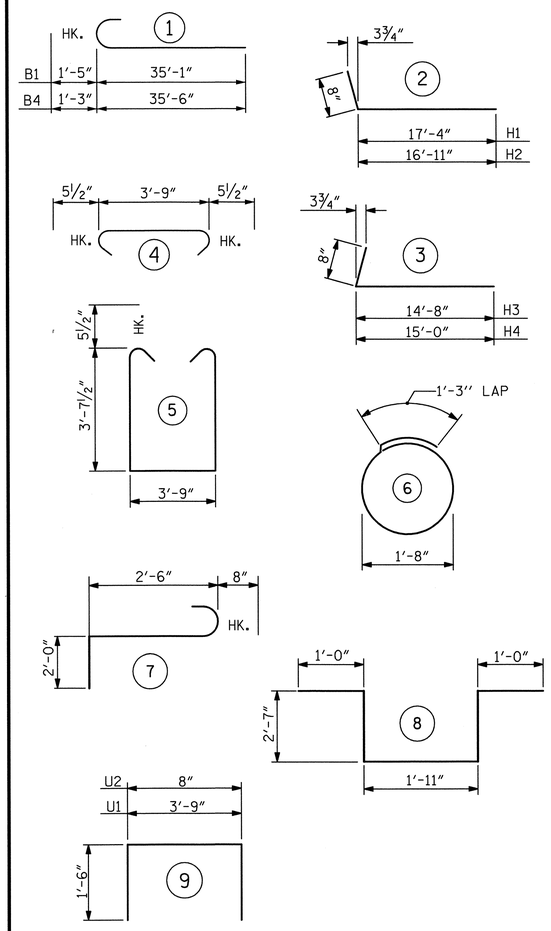

ALL BAR DIMENSIONS ARE OUT TO OUT

BILL OF MATERIAL
END BENT 2

BAR	NO.	SIZE	TYPE	LENGTH	WEIGHT
B1	10	10	1	36'-6"	1571
B2	12	4	STR	22'-5"	180
B3	16	4	STR	3'-9"	40
B4	12	9	1	36'-9"	1499
B5	12	4	STR	11'-0"	88
B6	6	4	STR	8'-9"	35
B7	12	5	STR	32'-9"	410
H1	16	4	2	18'-0"	192
H2	16	4	2	17'-7"	188
H3	16	4	3	15'-4"	164
H4	16	4	3	15'-8"	167
K1	36	4	STR	22'-5"	539
K2	4	4	STR	3'-0"	8
K3	4	4	STR	2'-11"	8
S1	106	5	4	4'-8"	516
S2	106	5	5	11'-11"	1317
S3	36	4	6	6'-6"	156
S4	6	6	7	5'-2"	47
S5	6	6	8	9'-1"	82
U1	22	4	9	6'-9"	99
U2	56	4	9	3'-8"	137
V1	112	5	STR	9'-8"	1129
V2	44	5	STR	11'-6"	528
V3	39	5	STR	11'-7"	471

TOTAL REINFORCING STEEL 9571 LB

CLASS "A" CONCRETE BREAKDOWN

POUR 1 (CAP, COLLARS, & LOWER WINGS)	47.9 CY
POUR 2 (BACKWALL AND UPPER WINGS)	24.0 CY
TOTAL CLASS "A" CONCRETE	71.9 CY

HP 12 X 53 STEEL PILES

NO. 11	330 LF

PROJECT NO. U-2524C

GUILFORD COUNTY

STATION: 9+53.33 -RPAY4-

SHEET 3 OF 3

STATE OF NORTH CAROLINA
DEPARTMENT OF TRANSPORTATION
RALEIGH

SUBSTRUCTURE

END BENT 2

-RAMP A-

PLANS PREPARED BY:

SIMPSON ENGINEERS & ASSOCIATES
5640 Dillard Drive
Suite 200
Cary, NC 27518
(919) 852-0468
(919) 852-0598 (Fax)
www.simpsonengr.com
LICENSURE NO. C-2521

NORTH CAROLINA PROFESSIONAL SEAL 023906 ENGINEER MARK A. AVERETTE
6-5-2013

REVISIONS							SHEET NO.
NO.	BY:	DATE:	NO.	BY:	DATE:		S-754
1			3				TOTAL SHEETS
2			4				836

DRAWN BY: R. SEALEY DATE: 4-13
CHECKED BY: M. AVERETTE DATE: 4-13
DESIGN ENGINEER OF RECORD: M. AVERETTE DATE: 4-13

6/5/2013 3:49:38 PM G:\Projects\2011\U-2524 (Guilford Co)\Structures\Ramp A\Drawings\Final\U-2524_sd_rpa_ebt2.dgn

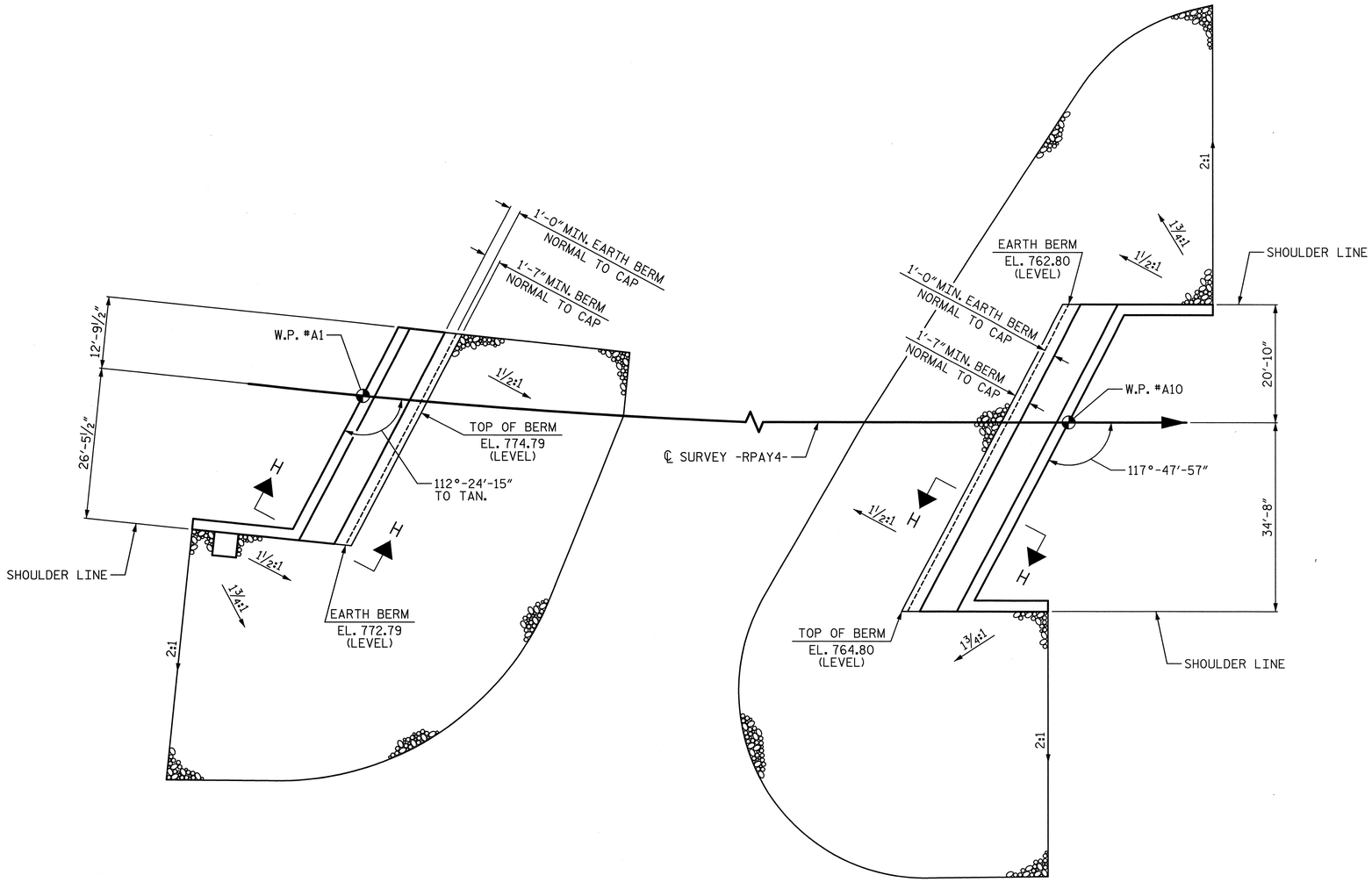

@ END BENT 1

@ END BENT 2

PLAN OF RIP RAP

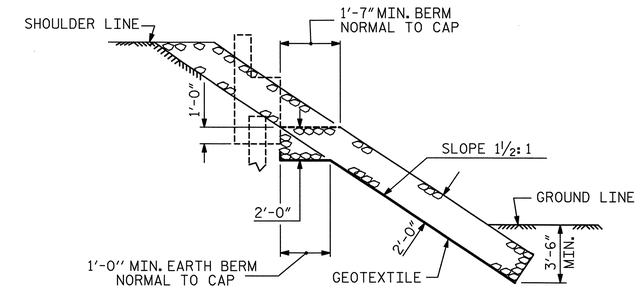

SECTION H-H

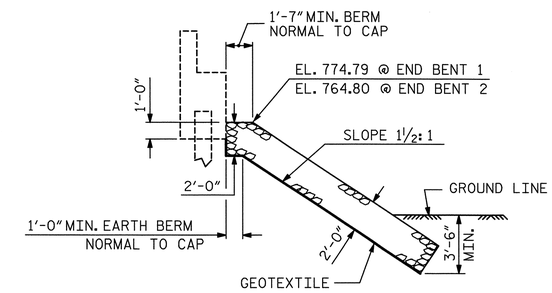

℄ SECTION BERM RIP RAPPED

ESTIMATED QUANTITIES		
BRIDGE @ STA. 9+53.33 -RPAY4-	RIP RAP CLASS II (2'-0" THICK)	GEOTEXTILE FOR DRAINAGE
	TONS	SQUARE YARDS
END BENT 1	525	585
END BENT 2	720	800

PROJECT NO. U-2524C

GUILFORD COUNTY

STATION: 9+53.33 -RPAY4-

STATE OF NORTH CAROLINA
DEPARTMENT OF TRANSPORTATION
RALEIGH

RIP RAP DETAILS

-RAMP A-

PLANS PREPARED BY:

SIMPSON ENGINEERS & ASSOCIATES
5640 Dillard Drive
Suite 200
Cary, NC 27518
(919) 852-0468
(919) 852-0598 (Fax)
www.simpsonengr.com

LICENSURE NO. C-2521

NORTH CAROLINA PROFESSIONAL SEAL 023906 ENGINEER MARK A. AVERETTE
6-5-2013

REVISIONS						SHEET NO.
NO.	BY:	DATE:	NO.	BY:	DATE:	S-755
1			3			TOTAL SHEETS
2			4			836

DRAWN BY: T. BANKOVICH DATE: 4-13
CHECKED BY: M. AVERETTE DATE: 4-13
DESIGN ENGINEER OF RECORD: M. AVERETTE DATE: 4-13

6/5/2013 3:49:44 PM G:\Projects\2011\U-2524 (Guilford Co)\Structures\Ramp A\Drawings\Final\U-2524_sd_rpa_rr.dgn

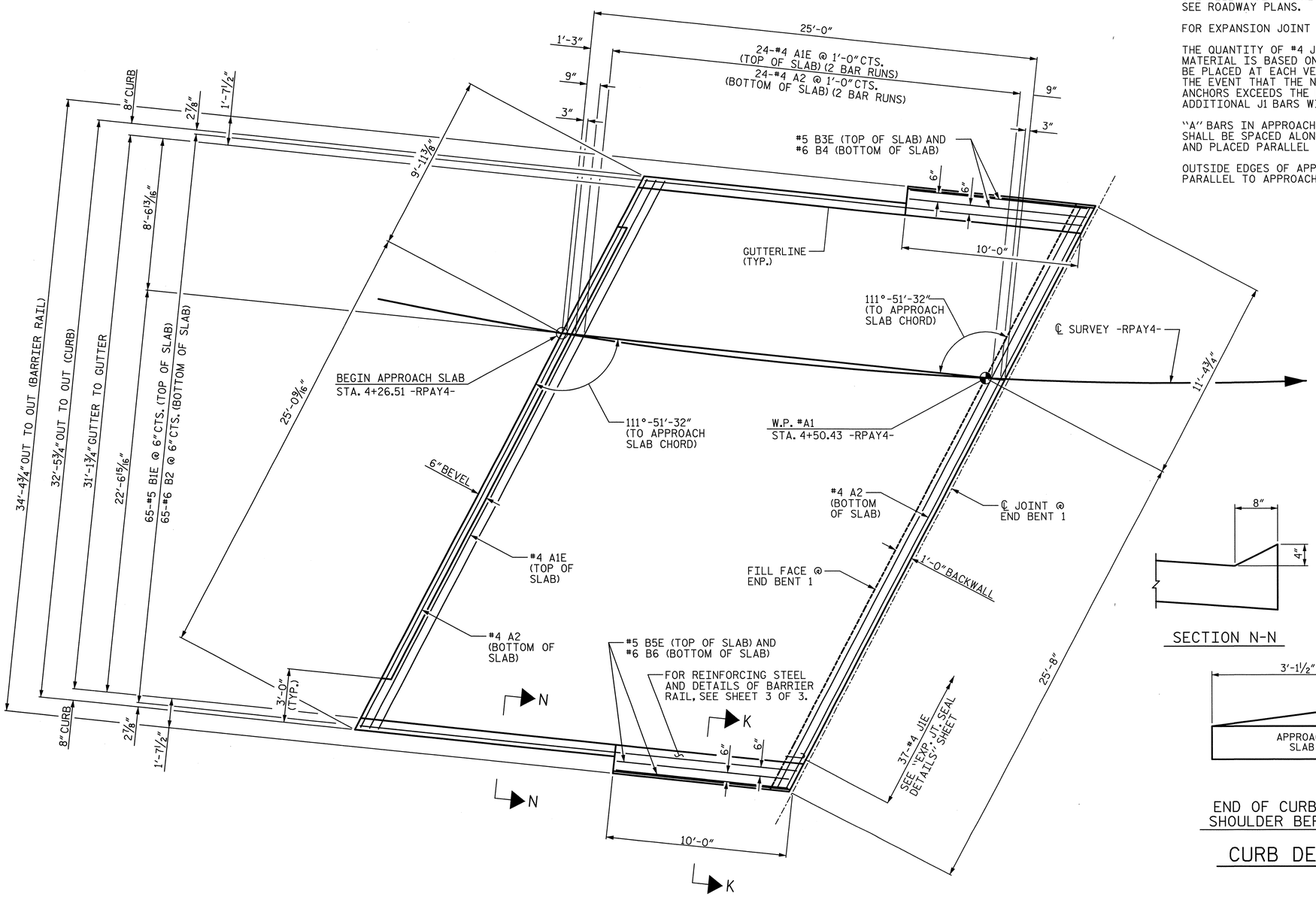

PLAN @ END BENT 1

NOTES:

APPROACH SLAB SHALL NOT BE CONSTRUCTED PRIOR TO COMPLETION OF THE BRIDGE DECK.

FOR REINFORCED BRIDGE APPROACH FILL INCLUDING GEOTEXTILE, IMPERMEABLE GEOMEMBRANE, 4" Ø DRAINAGE PIPE, #78M STONE, AND SELECT MATERIAL, SEE ROADWAY PLANS.

AREA BETWEEN THE WINGWALL AND APPROACH SLAB SHALL BE GRADED TO DRAIN THE WATER AWAY FROM THE FILL FACE OF THE BRIDGE AND SHALL BE PAVED. SEE ROADWAY PLANS.

FOR EXPANSION JOINT SEALS, SEE SPECIAL PROVISIONS.

THE QUANTITY OF #4 J1 BARS ON THE BILL OF MATERIAL IS BASED ON 1'-0" CENTERS. J1 BARS SHALL BE PLACED AT EACH VERTICAL STUD ANCHOR BOLT. IN THE EVENT THAT THE NUMBER OF VERTICAL STUD ANCHORS EXCEEDS THE NUMBER OF J1 BARS SPECIFIED, ADDITIONAL J1 BARS WILL NOT BE REQUIRED.

"A" BARS IN APPROACH SLAB @ END BENT 1 SHALL BE SPACED ALONG APPROACH SLAB CHORD AND PLACED PARALLEL TO FILL FACE.

OUTSIDE EDGES OF APPROACH SLAB AT END BENT 1 ARE PARALLEL TO APPROACH SLAB CHORD.

BILL OF MATERIAL
APPROACH SLAB 1

BAR	NO.	SIZE	TYPE	LENGTH	WEIGHT
A1E	50	4	STR	19'-5"	649
A2	52	4	STR	19'-3"	669
B1E	65	5	STR	23'-8"	1604
B2	65	6	STR	24'-7"	2400
B3E	2	5	STR	9'-11"	21
B4	2	6	STR	9'-11"	30
B5E	2	5	STR	9'-8"	20
B6	2	6	STR	9'-8"	29
J1E	37	4	1	1'-5"	35
REINFORCING STEEL					3128 LB
EPOXY COATED REINFORCING STEEL					2329 LB
CLASS "AA" CONCRETE BREAKDOWN					
POUR 1 (SLAB & CURB) **					36.2 CY

"E" INDICATES EPOXY COATED REINFORCING STEEL.

BAR TYPES

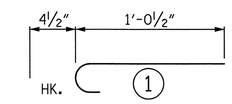

ALL BAR DIMENSIONS ARE OUT TO OUT

** QUANTITIES FOR BARRIER RAIL ARE NOT INCLUDED.

SPLICE LENGTHS

BAR SIZE	EPOXY COATED	UNCOATED
#4	2'-0"	1'-9"
#5	2'-6"	2'-2"
#6	3'-10"	2'-7"

SECTION N-N

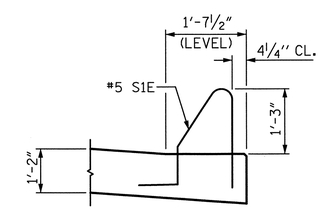

SECTION K-K

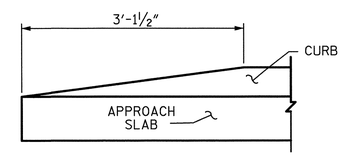

END OF CURB WITHOUT SHOULDER BERM GUTTER

CURB DETAILS

PROJECT NO. U-2524C

GUILFORD COUNTY

STATION: 9+53.33 -RPAY4-

SHEET 1 OF 3

STATE OF NORTH CAROLINA
DEPARTMENT OF TRANSPORTATION
RALEIGH

BRIDGE APPROACH SLAB PLAN

-RAMP A-

PLANS PREPARED BY:

SIMPSON ENGINEERS & ASSOCIATES
5640 Dillard Drive
Suite 200
Cary, NC 27518
(919) 852-0468
(919) 852-0598 (Fax)
www.simpsonengr.com
LICENSURE NO. C-2521

NORTH CAROLINA PROFESSIONAL SEAL 023908 ENGINEER MARK A. AVERETTE
6-5-2013

REVISIONS							SHEET NO.
NO.	BY:	DATE:	NO.	BY:	DATE:		S-756
1			3				TOTAL SHEETS
2			4				836

DRAWN BY: T. BANKOVICH DATE: 4-13
CHECKED BY: M. AVERETTE DATE: 4-13
DESIGN ENGINEER OF RECORD: M. AVERETTE DATE: 4-13

6/5/2013 3:49:49 PM G:\Projects\2011\U-2524 (Guilford Co)\Structures\Ramp A\Drawings\Final\U-2524_sd_rpa_as.dgn

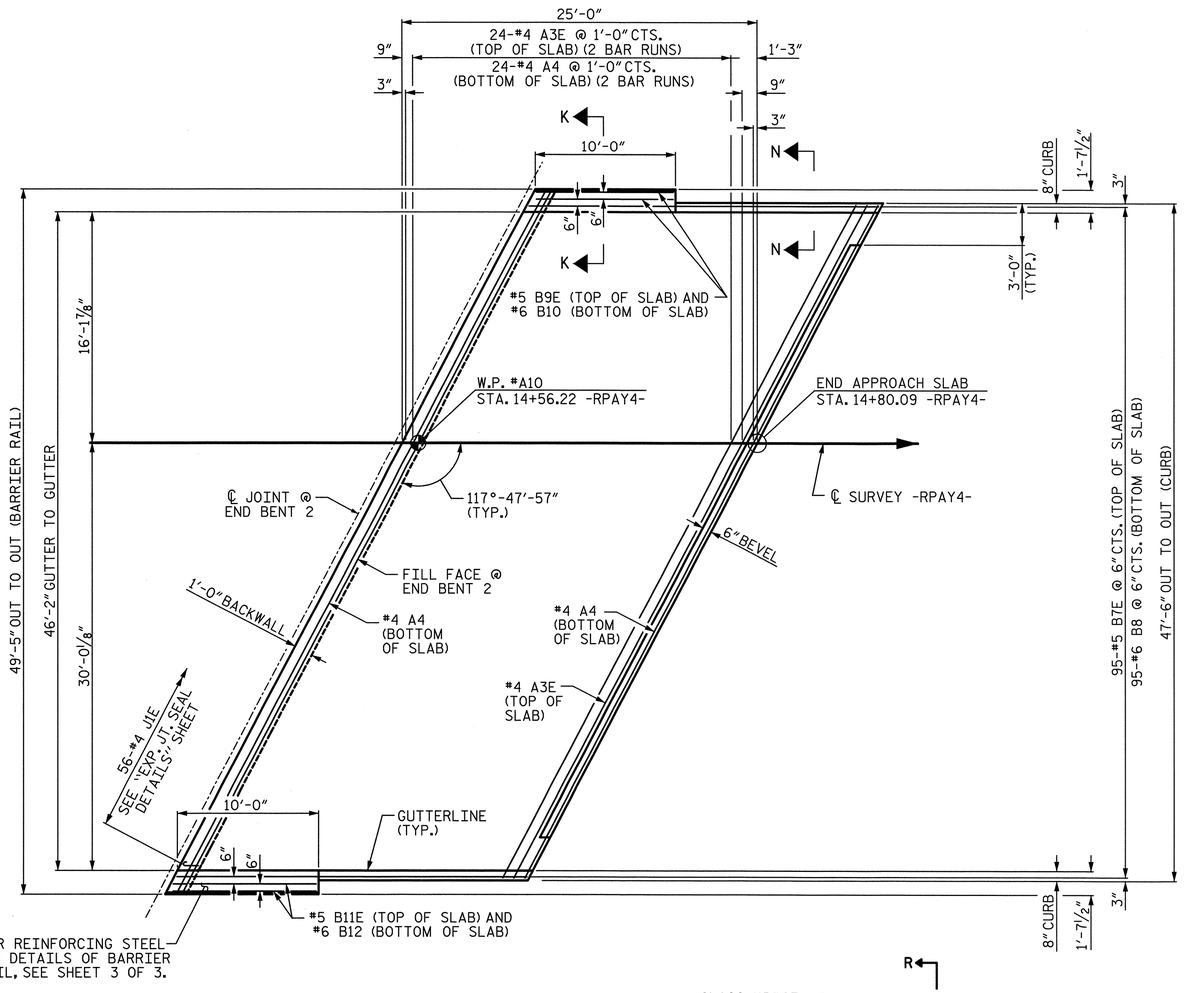

PLAN @ END BENT 2

NOTES:

FOR "SECTION N-N" AND "SECTION K-K", SEE SHEET 1 OF 3.

BILL OF MATERIAL
APPROACH SLAB 2

BAR	NO.	SIZE	TYPE	LENGTH	WEIGHT
A3E	50	4	STR	28'-10"	963
A4	52	4	STR	28'-8"	996
B7E	95	5	STR	23'-8"	2345
B8	95	6	STR	24'-7"	3508
B9E	2	5	STR	9'-7"	20
B10	2	6	STR	9'-7"	29
B11E	2	5	STR	10'-0"	21
B12	2	6	STR	10'-0"	30
J1E	56	4	1	1'-5"	53
REINFORCING STEEL					4563 LB
EPOXY COATED REINFORCING STEEL					3402 LB
CLASS "AA" CONCRETE BREAKDOWN					
POUR 1 (SLAB & CURB) **					52.6 CY

"E" INDICATES EPOXY COATED REINFORCING STEEL.

BAR TYPES

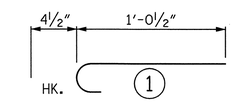

ALL BAR DIMENSIONS ARE OUT TO OUT

** QUANTITIES FOR BARRIER RAIL ARE NOT INCLUDED.

SPLICE LENGTHS

BAR SIZE	EPOXY COATED	UNCOATED
#4	2'-0"	1'-9"
#5	2'-6"	2'-2"
#6	3'-10"	2'-7"

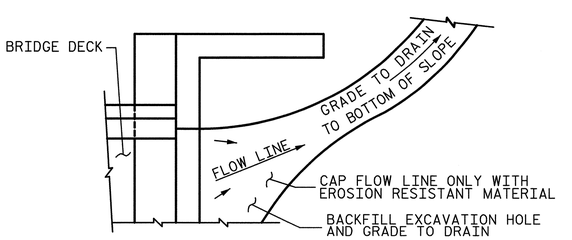

NOTE: IF THE APPROACH SLAB IS NOT CONSTRUCTED IMMEDIATELY AFTER THE BACKFILLING OF THE END BENT EXCAVATION, GRADE TO DRAIN TO THE BOTTOM OF THE SLOPE AND PROVIDE EROSION RESISTANT MATERIAL, SUCH AS FIBERGLASS ROVING OR AS DIRECTED BY THE ENGINEER TO PREVENT SOIL EROSION AND TO PROTECT THE AREA ADJACENT TO THE STRUCTURE. THE CONTRACTOR WILL BE REQUIRED TO REMOVE THESE MATERIALS PRIOR TO CONSTRUCTION OF THE APPROACH SLAB.

TEMPORARY DRAINAGE DETAIL

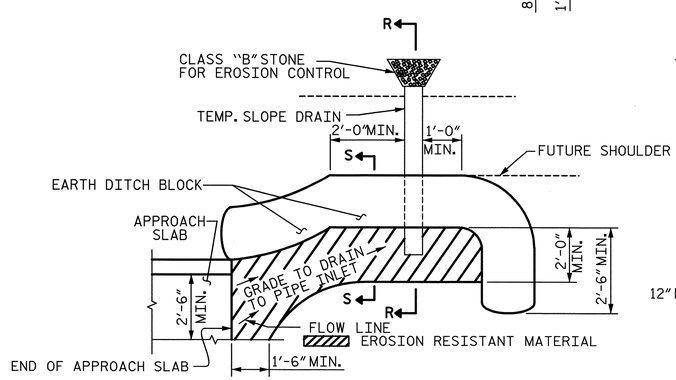

NOTE: IMMEDIATELY AFTER THE CONSTRUCTION OF THE APPROACH SLAB, THE CONTRACTOR SHALL PROVIDE TEMPORARY BERM AND SLOPE DRAIN. CONTRACTOR SHALL GRADE TO PIPE INLET AND PROVIDE EROSION RESISTANT MATERIAL AS SHOWN. THE EROSION RESISTANT MATERIAL SHALL BE EITHER 1) ASPHALT PLANT MIX, TYPE 1 OR TYPE 2, MIN. 2" DEPTH, 2) EROSION CONTROL MAT, OR 3) CONCRETE, AS DIRECTED BY THE ENGINEER. THE SLOPE DRAIN SHALL CONSIST OF A NON-PERFORATED TEMPORARY DRAINAGE PIPE, 12 INCHES IN DIAMETER.

PLAN VIEW

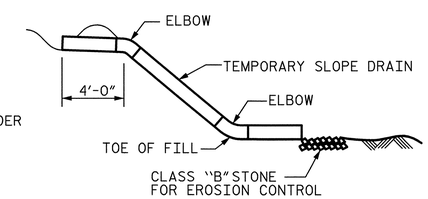

SECTION R-R

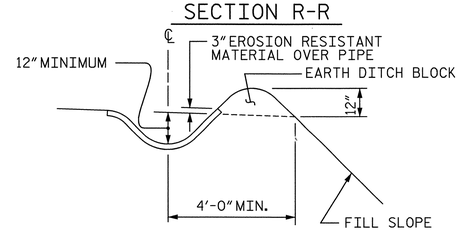

SECTION S-S

TEMPORARY BERM AND SLOPE DRAIN DETAILS

(TO BE USED WHEN SHOULDER BERM GUTTER IS REQUIRED)

PROJECT NO. U-2524C

GUILFORD COUNTY

STATION: 9+53.33 -RPAY4-

SHEET 2 OF 3

STATE OF NORTH CAROLINA
DEPARTMENT OF TRANSPORTATION
RALEIGH

BRIDGE APPROACH SLAB PLAN

-RAMP A-

PLANS PREPARED BY:

SIMPSON ENGINEERS & ASSOCIATES
5640 Dillard Drive
Suite 200
Cary, NC 27518
(919) 852-0468
(919) 852-0598 (Fax)
www.simpsonengr.com
LICENSURE NO. C-2521

NORTH CAROLINA PROFESSIONAL SEAL 023908 ENGINEER MARK A. AVERETTE
6-5-2013

REVISIONS						SHEET NO.
NO.	BY:	DATE:	NO.	BY:	DATE:	S-757
1			3			TOTAL SHEETS
2			4			836

DRAWN BY: T. BANKOVICH DATE: 4-13
CHECKED BY: M. AVERETTE DATE: 4-13
DESIGN ENGINEER OF RECORD: M. AVERETTE DATE: 4-13

6/5/2013 3:49:54 PM G:\Projects\2011\U-2524 (Guilford Co)\Structures\Ramp A\Drawings\Final\U-2524_sd_rpa_as.dgn

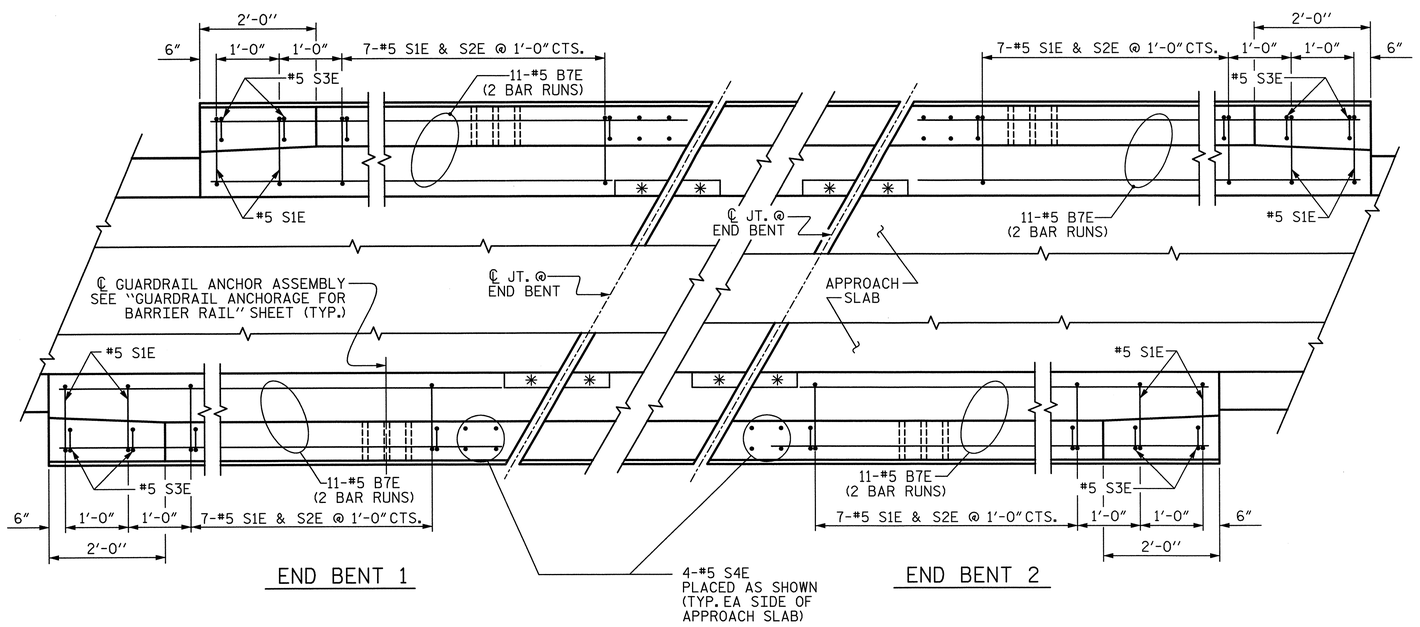

END BENT 1

END BENT 2

PLAN OF BARRIER RAIL

* FOR RECESS DETAILS, SEE "EXPANSION JOINT SEAL DETAILS", SHEET 2 OF 3

NOTES

THE COST OF THE BARRIER RAIL ON THE APPROACH SLAB SHALL BE INCLUDED IN THE LINEAR FOOT CONTRACT PRICE BID FOR "CONCRETE BARRIER RAIL".

THE BARRIER RAIL ON EACH APPROACH SLAB SHALL NOT BE CAST UNTIL ALL APPROACH SLAB CONCRETE HAS BEEN CAST AND HAS REACHED A MINIMUM COMPRESSIVE STRENGTH OF 3,000 PSI.

ALL REINFORCING STEEL IN BARRIER RAILS SHALL BE EPOXY COATED.

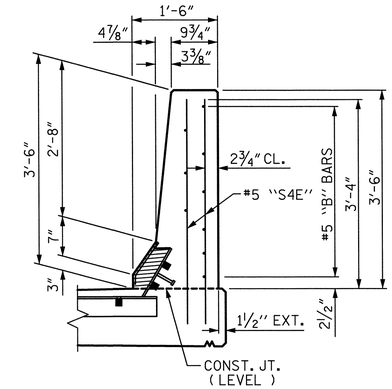

END VIEW AT EXP. JOINTS

BAR TYPES

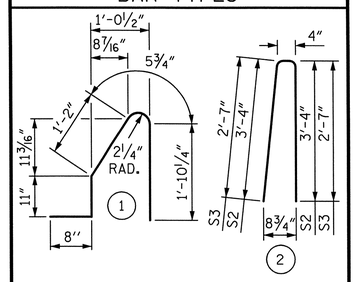

ALL BAR DIMENSIONS ARE OUT TO OUT

BILL OF MATERIAL

BARRIER RAIL ONLY

BAR	SIZE	NO.	TYPE	LENGTH	WEIGHT
B7E	5	88	STR	6'-11"	635
S1E	5	36	1	5'-1"	191
S2E	5	28	2	7'-0"	204
S3E	5	8	2	5'-6"	46
S4E	5	16	STR	4'-3"	71

EPOXY COATED REINFORCING STEEL	1147	LB
CLASS "AA" CONCRETE	5.7	CY
CONCRETE BARRIER RAIL	41.5	LF

"E" INDICATES EPOXY COATED REINFORCING STEEL

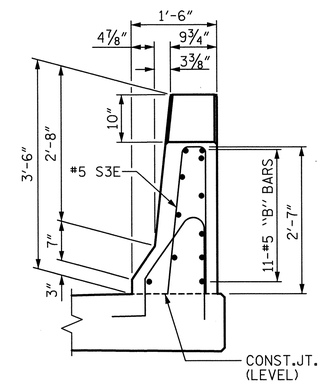

END VIEW

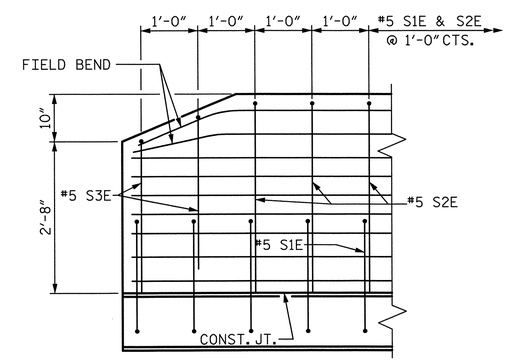

SIDE VIEW

END OF RAIL DETAILS

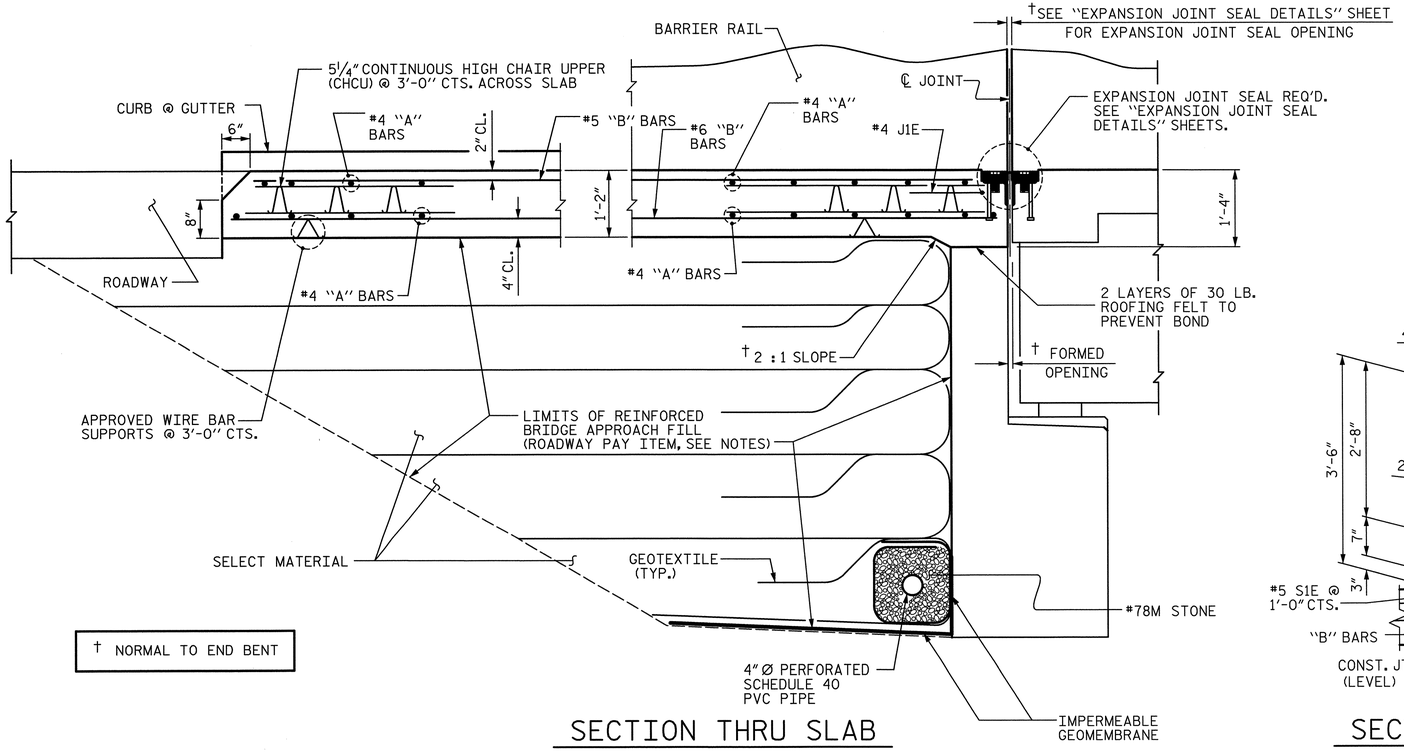

† NORMAL TO END BENT

SECTION THRU SLAB

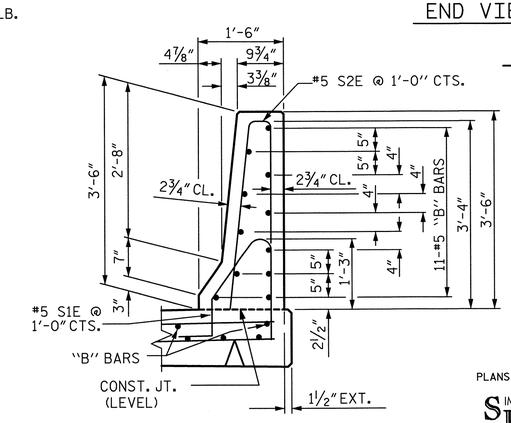

SECTION THRU RAIL

PROJECT NO. U-2524C

GUILFORD COUNTY

STATION: 9+53.33 -RPAY4-

SHEET 3 OF 3

STATE OF NORTH CAROLINA
DEPARTMENT OF TRANSPORTATION
RALEIGH

BRIDGE APPROACH SLAB DETAILS

-RAMP A-

PLANS PREPARED BY:

SIMPSON ENGINEERS & ASSOCIATES
5640 Dillard Drive
Suite 200
Cary, NC 27518
(919) 852-0468
(919) 852-0598 (Fax)
www.simpsonengr.com
LICENSURE NO. C-2521

NORTH CAROLINA PROFESSIONAL SEAL 023906 ENGINEER MARK A. AVERETTE
6-5-2013

REVISIONS							
NO.	BY:	DATE:	NO.	BY:	DATE:	SHEET NO.	S-758
1			3			TOTAL SHEETS	836
2			4				

DRAWN BY:	T. BANKOVICH	DATE:	4-13
CHECKED BY:	M. AVERETTE	DATE:	4-13
DESIGN ENGINEER OF RECORD:	M. AVERETTE	DATE:	4-13

6/5/2013 3:49:58 PM G:\Projects\2011\U-2524 (Guilford Co)\Structures\Ramp A\Drawings\Final\U-2524_sd_rpa_as.dgn

F.A. PROJECT NO. NHF-0708(52)

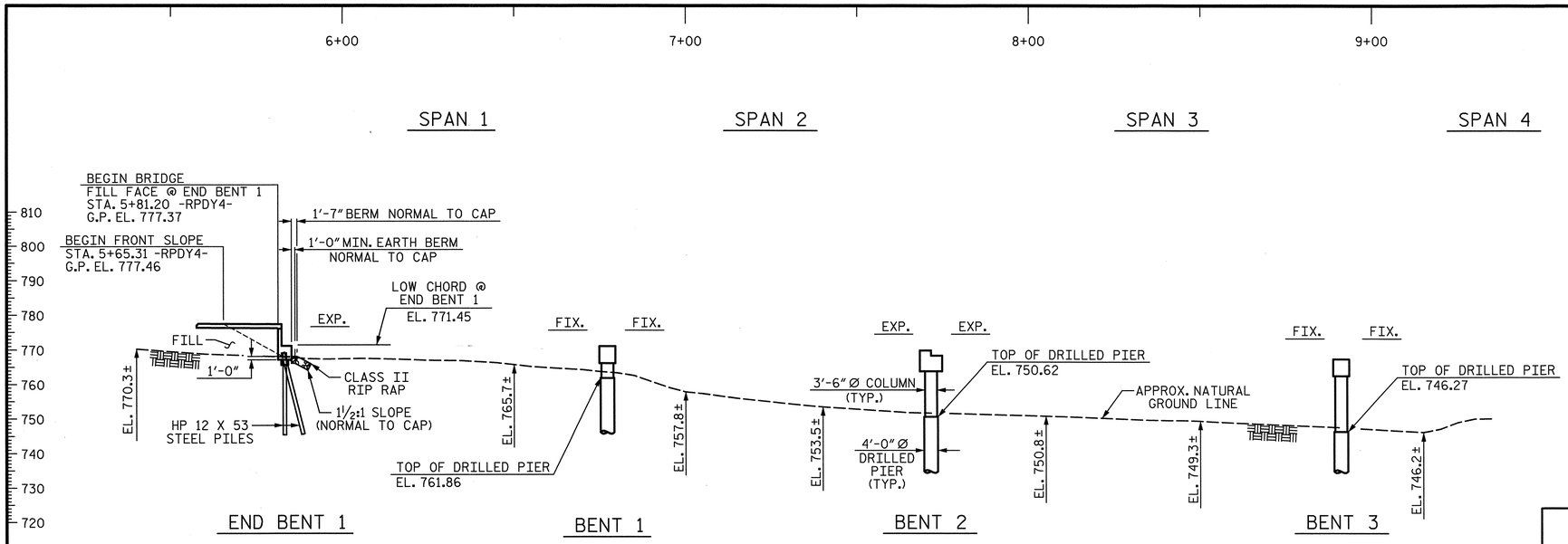

PART SECTION ALONG ℄ SURVEY -RPDY4-

SECTION @ END BENT AND BENTS ARE @ RIGHT ANGLES

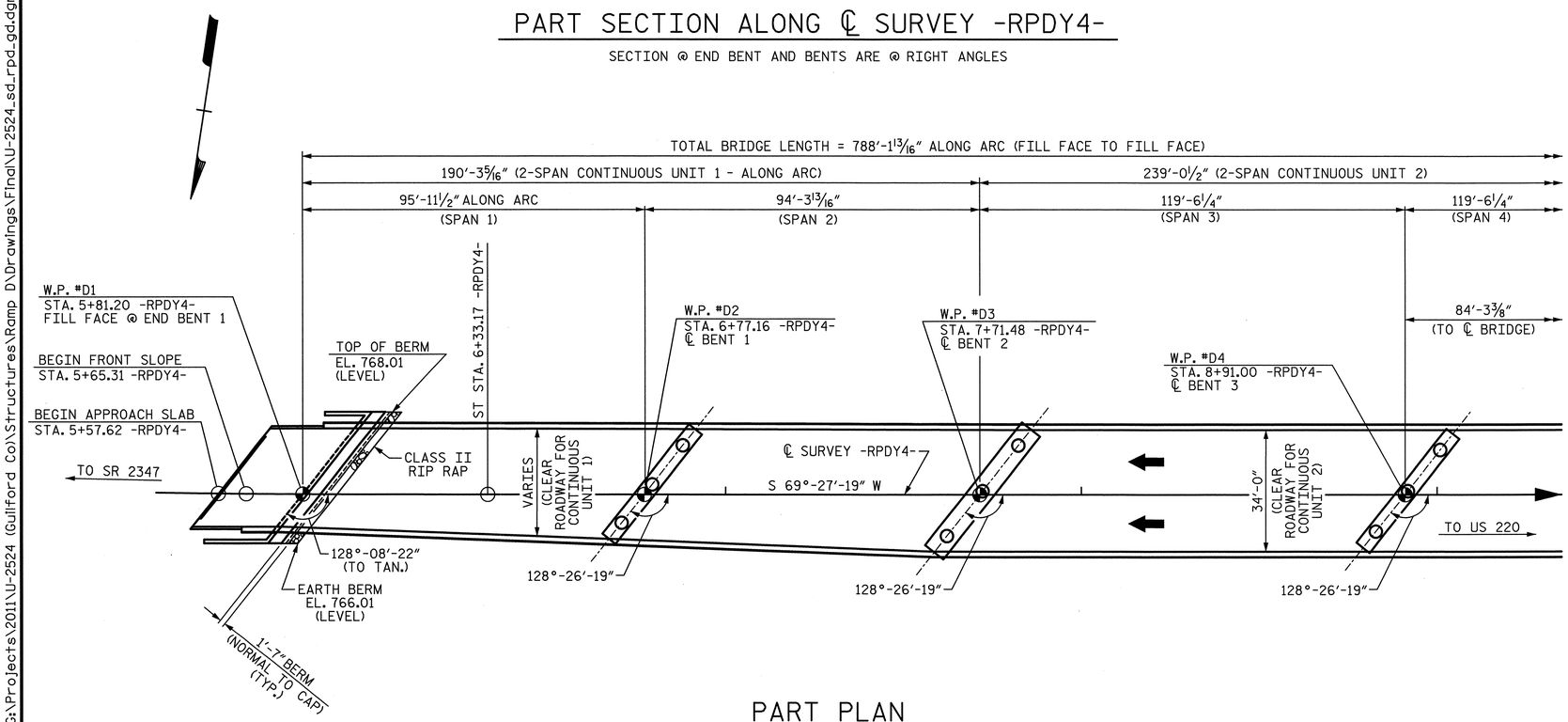

PART PLAN

PILES NOT SHOWN IN PLAN VIEW

END BENT AND ALL BENTS ARE PARALLEL

HYDRAULIC DATA:

DESIGN DISCHARGE	= 6223 CFS
FREQUENCY OF DESIGN FLOOD	= 50 YEAR
DESIGN HIGH WATER ELEVATION	= 751.6
DRAINAGE AREA	= 16.3 SQ. MI.
BASE DISCHARGE (Q 100)	= 7302 CFS
BASE HIGH WATER ELEVATION	= 752.02

OVERTOPPING FLOOD DATA:

OVERTOPPING DISCHARGE	= -- CFS
FREQUENCY OF OVERTOPPING FLOOD	= >500+ YEAR
OVERTOPPING FLOOD ELEVATION	= --

(-)0.5644% △ (-)1.9183%

PVI STA. 8+75.00
EL. = 775.71'
VC = 410'

GRADE DATA -RPDY4-

HORIZONTAL CURVE DATA

PI STA. 2+06.25 -RPDY4-
Δ = 20°-20'-08.8" (LT.)
D = 4°-58'-56.1"
L = 408.17'
T = 206.25'
R = 1150.00'
e = 0.06
D.S. = 55.00 Mph
RUNOFF = 200.00'

PI STA. 4+83.23 -RPDY4-
Øs = 5°-36'-40.8"
Ls = 225.00'
LT = 150.08'
ST = 75.07'

PI STA. 14+64.53 -RPDY4-
Øs = 8°-02'-20.2"
Ls = 110.00'
LT = 73.41'
ST = 36.74'

PI STA. 17+17.33 -RPDY4-
Δ = 57°-45'-26.9" (RT.)
D = 14°-36'-58.6"
L = 395.16'
T = 216.21'
R = 392.00'
e = 0.04
D.S. = 30.00 Mph
RUNOFF = 110.00'

PI STA. 19+33.02 -RPDY4-
Øs = 8°-02'-20.2"
Ls = 110.00'
LT = 73.41'
ST = 36.74'

I HEREBY CERTIFY THESE PLANS
ARE THE AS-BUILT PLANS

PROJECT NO. U-2524C

GUILFORD COUNTY

STATION: 9+75.28 -RPDY4-

SHEET 1 OF 7 BRIDGE NO. 1132

STATE OF NORTH CAROLINA
DEPARTMENT OF TRANSPORTATION
RALEIGH

GENERAL DRAWING
FOR BRIDGE ON RAMP D
OVER HORSEPEN CREEK
BETWEEN SR 2347
AND US 220
-RAMP D-

PLANS PREPARED BY:

SIMPSON ENGINEERS & ASSOCIATES
5640 Dillard Drive
Suite 200
Cary, NC 27518
(919) 852-0468
(919) 852-0598 (Fax)
www.simpsonengr.com
LICENSURE NO. C-2521

NORTH CAROLINA PROFESSIONAL ENGINEER SEAL 023906 MARK A. AVERETTE
6-5-2013

REVISIONS								
NO.	BY:	DATE:	NO.	BY:	DATE:			
1			3					
2			4					

SHEET NO. S-759
TOTAL SHEETS 836

DRAWN BY: T. BANKOVICH DATE: 4-13
CHECKED BY: M. AVERETTE DATE: 4-13
DESIGN ENGINEER OF RECORD: M. AVERETTE DATE: 4-13

6/5/2013 2:35:04 PM G:\Projects\2011\U-2524 (Guilford Co)\Structures\Ramp D\Drawings\Final\U-2524_sd_rpd_gd.dgn

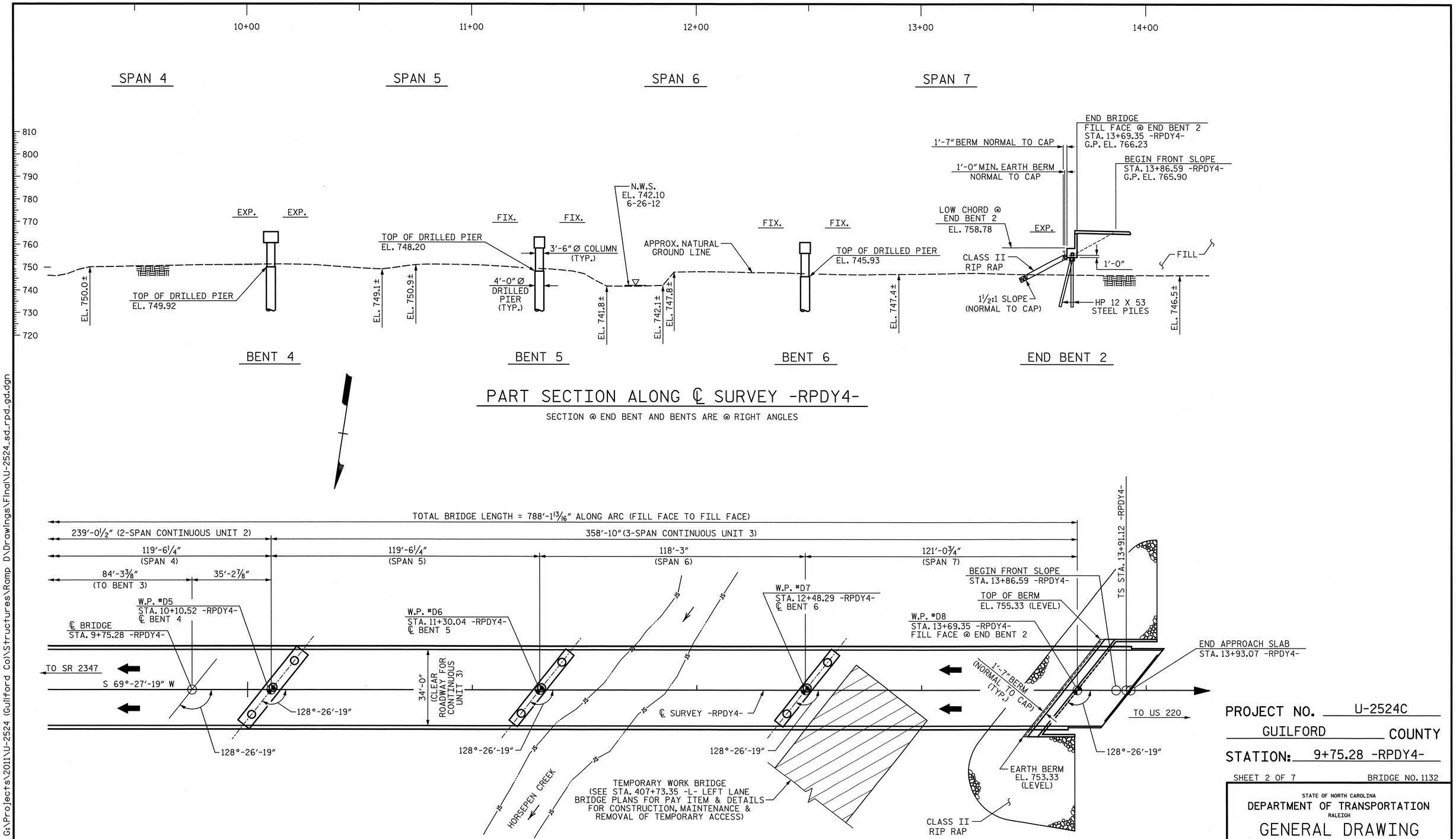

PART SECTION ALONG ℄ SURVEY -RPDY4-

SECTION @ END BENT AND BENTS ARE @ RIGHT ANGLES

PART PLAN

PILES NOT SHOWN IN PLAN VIEW

END BENT AND ALL BENTS ARE PARALLEL

PROJECT NO. U-2524C

GUILFORD COUNTY

STATION: 9+75.28 -RPDY4-

SHEET 2 OF 7 BRIDGE NO. 1132

STATE OF NORTH CAROLINA
DEPARTMENT OF TRANSPORTATION
RALEIGH

GENERAL DRAWING

FOR BRIDGE ON RAMP D
OVER HORSEPEN CREEK
BETWEEN SR 2347
AND US 220

-RAMP D-

REVISIONS						SHEET NO.
NO.	BY:	DATE:	NO.	BY:	DATE:	S-760
1			3			TOTAL SHEETS
2			4			836

PLANS PREPARED BY:

SIMPSON ENGINEERS & ASSOCIATES
5640 Dillard Drive
Suite 200
Cary, NC 27518
(919) 852-0468
(919) 852-0598 (Fax)
www.simpsonengr.com
LICENSURE NO. C-2521

NORTH CAROLINA PROFESSIONAL SEAL 023906 ENGINEER MARK A. AVERETTE
6-5-2013

DRAWN BY:	T. BANKOVICH	DATE:	4-13
CHECKED BY:	M. AVERETTE	DATE:	4-13
DESIGN ENGINEER OF RECORD:	M. AVERETTE	DATE:	4-13

6/5/2013 2:35:09 PM G:\Projects\2011\U-2524 (Guilford Co)\Structures\Ramp D\Drawings\Final\U-2524_sd_rpd_gd.dgn

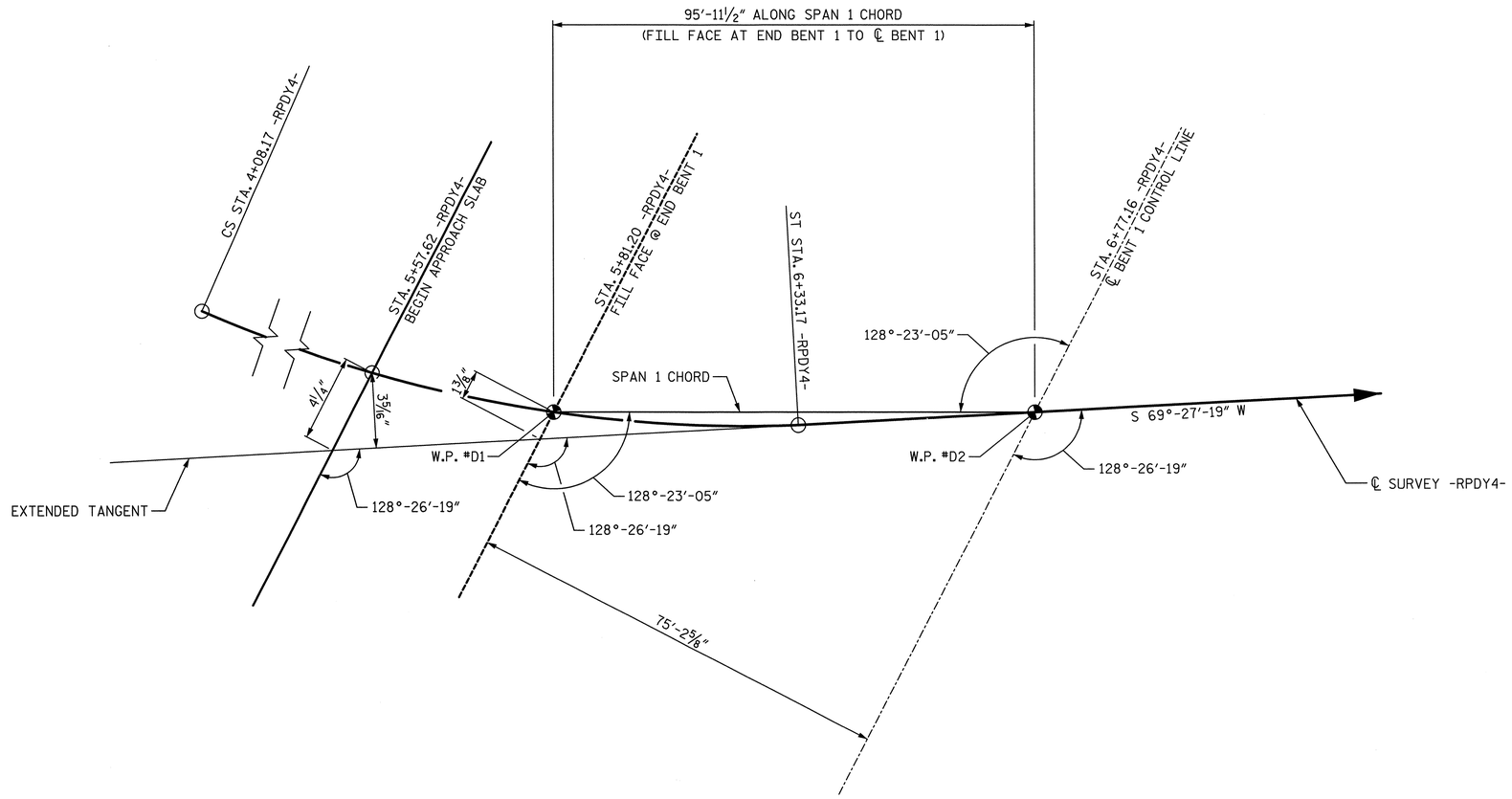

BRIDGE LAYOUT

END BENT 1 AND BENT 1 ARE PARALLEL

PROJECT NO. U-2524C

GUILFORD COUNTY

STATION: 9+75.28 -RPDY4-

SHEET 3 OF 7

STATE OF NORTH CAROLINA
DEPARTMENT OF TRANSPORTATION
RALEIGH

GENERAL DRAWING
FOR BRIDGE ON RAMP D
OVER HORSEPEN CREEK
BETWEEN SR 2347
AND US 220
-RAMP D-

PLANS PREPARED BY:

SIMPSON ENGINEERS & ASSOCIATES
5640 Dillard Drive
Suite 200
Cary, NC 27518
(919) 852-0468
(919) 852-0598 (Fax)
www.simpsonengr.com
LICENSURE NO. C-2521

NORTH CAROLINA PROFESSIONAL SEAL 023906 ENGINEER MARK A. AVERETTE
6-5-2013

REVISIONS							
NO.	BY:	DATE:	NO.	BY:	DATE:		
1			3				
2			4				

SHEET NO. S-761

TOTAL SHEETS 836

DRAWN BY: T. BANKOVICH DATE: 4-13
CHECKED BY: M. AVERETTE DATE: 4-13
DESIGN ENGINEER OF RECORD: M. AVERETTE DATE: 4-13

6/5/2013 2:35:13 PM G:\Projects\2011\U-2524 (Guilford Co)\Structures\Ramp D\Drawings\Final\U-2524_sd_rpd_gd.dgn

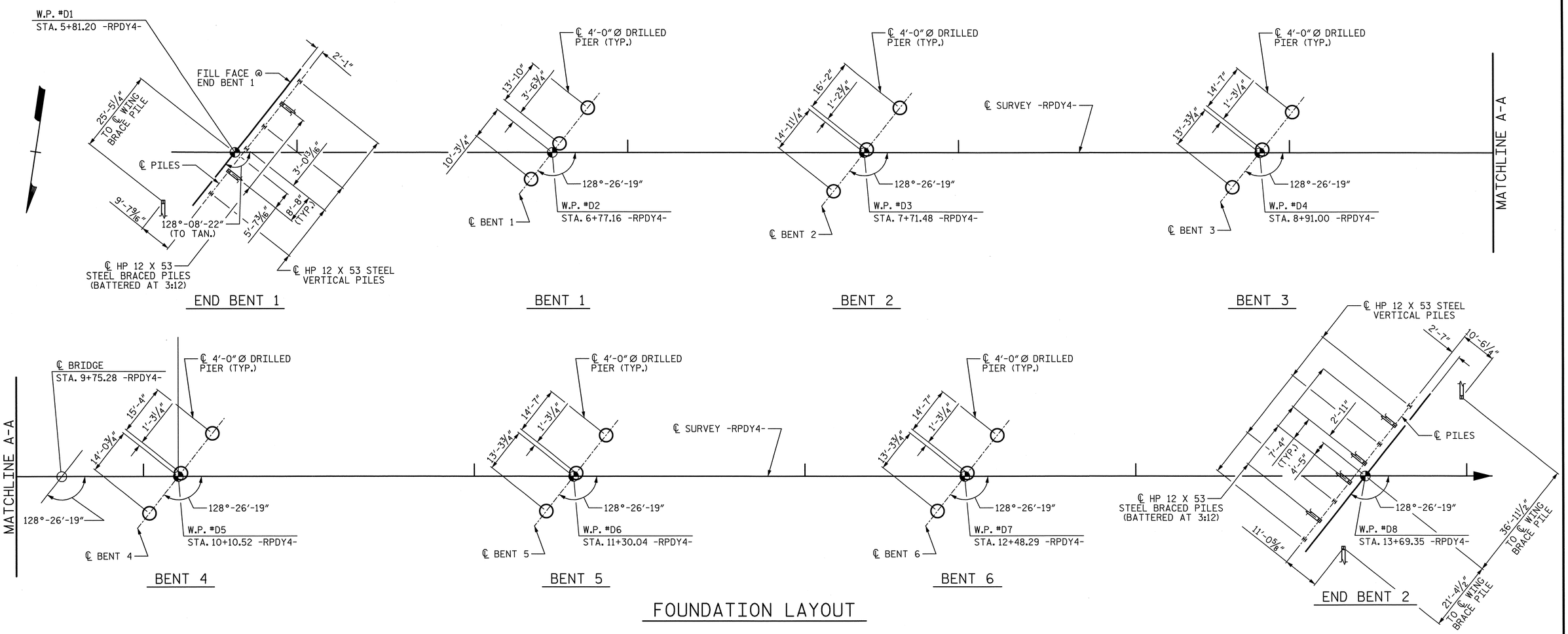

FOUNDATION LAYOUT

FOUNDATION NOTES:

FOR PILES, SEE SECTION 450 OF THE STANDARD SPECIFICATIONS.

PILES AT END BENT 1 ARE DESIGNED FOR A FACTORED RESISTANCE OF 120 TONS PER PILE.

DRIVE PILES AT END BENT 1 TO A REQUIRED DRIVING RESISTANCE OF 200 TONS PER PILE.

PILES AT END BENT 2 ARE DESIGNED FOR A FACTORED RESISTANCE OF 130 TONS PER PILE.

DRIVE PILES AT END BENT 2 TO A REQUIRED DRIVING RESISTANCE OF 220 TONS PER PILE.

STEEL H-PILE POINTS ARE REQUIRED FOR STEEL H-PILES AT END BENT 1. FOR STEEL PILE POINTS, SEE SECTION 450 OF THE STANDARD SPECIFICATIONS.

FOR DRILLED PIERS, SEE SECTION 411 OF THE STANDARD SPECIFICATIONS.

DRILLED PIERS AT BENT 1 ARE DESIGNED FOR A FACTORED RESISTANCE OF 370 TONS PER PIER. CHECK FIELD CONDITIONS FOR THE REQUIRED TIP RESISTANCE OF 40.0 TSF.

DRILLED PIERS AT BENT 2 ARE DESIGNED FOR A FACTORED RESISTANCE OF 450 TONS PER PIER. CHECK FIELD CONDITIONS FOR THE REQUIRED TIP RESISTANCE OF 40.0 TSF.

DRILLED PIERS AT BENT 3 THROUGH BENT 6 ARE DESIGNED FOR A FACTORED RESISTANCEOF 520 TONS PER PIER. CHECK FIELD CONDITIONS FOR THE REQUIRED TIP RESISTANCE OF 40.0 TSF.

INSTALL DRILLED PIERS AT BENT 1 TO A TIP ELEVATION NO HIGHER THAN 735 FT (LEFT AND CENTER) AND 745 FT (RIGHT), RESPECTIVELY, AND WITH THE REQUIRED TIP RESISTANCE AND PENETRATION OF AT LEAST 8 FT INTO ROCK AS DEFINED BY ARTICLE 411-1 OF THE STANDARD SPECIFICATIONS.

INSTALL DRILLED PIERS AT BENT 2 TO A TIP ELEVATION NO HIGHER THAN 723 FT AND WITH THE REQUIRED TIP RESISTANCE AND PENETRATION OF AT LEAST 9 FT INTO ROCK AS DEFINED BY ARTICLE 411-1 OF THE STANDARD SPECIFICATIONS.

INSTALL DRILLED PIERS AT BENT 3 TO A TIP ELEVATION NO HIGHER THAN 714 FT (LEFT), 716 (CENTER), AND 718 FT (RIGHT) RESPECTIVELY, AND WITH THE REQUIRED TIP RESISTANCE AND PENETRATION OF AT LEAST 9 FT INTO ROCK AS DEFINED BY ARTICLE 411-1 OF THE STANDARD SPECIFICATIONS.

INSTALL DRILLED PIERS AT BENT 4 TO A TIP ELEVATION NO HIGHER THAN 714 FT AND WITH THE REQUIRED TIP RESISTANCE AND PENETRATION OF AT LEAST 9 FT INTO ROCK AS DEFINED BY ARTICLE 411-1 OF THE STANDARD SPECIFICATIONS.

INSTALL DRILLED PIERS AT BENT 5 TO A TIP ELEVATION NO HIGHER THAN 713 FT (LEFT), 709 FT (CENTER), AND 705 FT (RIGHT) RESPECTIVELY, AND WITH THE REQUIRED TIP RESISTANCE AND PENETRATION OF AT LEAST 8 FT INTO ROCK AS DEFINED BY ARTICLE 411-1 OF THE STANDARD SPECIFICATIONS.

INSTALL DRILLED PIERS AT BENT 6 TO A TIP ELEVATION NO HIGHER THAN 698 FT (LEFT), 702 (CENTER), AND 706 FT (RIGHT), RESPECTIVELY, AND WITH THE REQUIRED TIP RESISTANCE AND PENETRATION OF AT LEAST 8 FT INTO ROCK AS DEFINED BY ARTICLE 411-1 OF THE STANDARD SPECIFICATIONS.

THE SCOUR CRITICAL ELEVATIONS FOR BENT 2 THROUGH BENT 6 ARE ELEVATIONS 731 FT, 727 FT, 731 FT, 743 FT AND 740 FT, RESPECTIVELY. SCOUR CRITICAL ELEVATIONS ARE USED TO MONITOR POSSIBLE SCOUR PROBLEMS DURING THE LIFE OF THE STRUCTURE.

SID INSPECTIONS MAY BE REQUIRED FOR DRILLED PIERS. THE ENGINEER WILL DETERMINE THE NEED FOR SID INSPECTIONS. FOR SID INSPECTIONS, SEE SECTION 411 OF THE STANDARD SPECIFICATIONS.

CSL TUBES ARE REQUIRED AND CSL TESTING MAY BE REQUIRED FOR DRILLED PIERS. THE ENGINEER WILL DETERMINE THE NEED FOR CSL TESTING. FOR CSL TESTING, SEE SECTION 411 OF THE STANDARD SPECIFICATIONS.

OBSERVE A 6 MONTH WAITING PERIOD AFTER CONSTRUCTING THE EMBANKMENT TO WITHIN 2 FT OF FINISHED GRADE BEFORE BEGINNING END BENT CONSTRUCTION AT END BENT 2.

PROJECT NO. U-2524C
GUILFORD COUNTY
STATION: 9+75.28 -RPDY4-

SHEET 4 OF 7

STATE OF NORTH CAROLINA
DEPARTMENT OF TRANSPORTATION
RALEIGH

GENERAL DRAWING
FOR BRIDGE ON RAMP D
OVER HORSEPEN CREEK
BETWEEN SR 2347
AND US 220
-RAMP D-

REVISIONS						SHEET NO.
NO.	BY:	DATE:	NO.	BY:	DATE:	S-762
1			3			TOTAL SHEETS
2			4			836

PLANS PREPARED BY:
SIMPSON ENGINEERS & ASSOCIATES
5640 Dillard Drive
Suite 200
Cary, NC 27518
(919) 852-0468
(919) 852-0598 (Fax)
www.simpsonengr.com
LICENSURE NO. C-2521

NORTH CAROLINA PROFESSIONAL SEAL 023906 ENGINEER MARK A. AVERETTE
6-5-2013

DRAWN BY:	T. BANKOVICH	DATE:	4-13
CHECKED BY:	M. AVERETTE	DATE:	4-13
DESIGN ENGINEER OF RECORD:	M. AVERETTE	DATE:	4-13

6/5/2013 2:35:17 PM G:\Projects\2011\U-2524 (Guilford Co)\Structures\Ramp D\Drawings\Final\U-2524_sd_rpd_gd.dgn

BM #12 LARGE NAIL SET IN 12" GUM, STA. 4+59.54 -RPDY4- 241.89' RT, EL. 748.99'

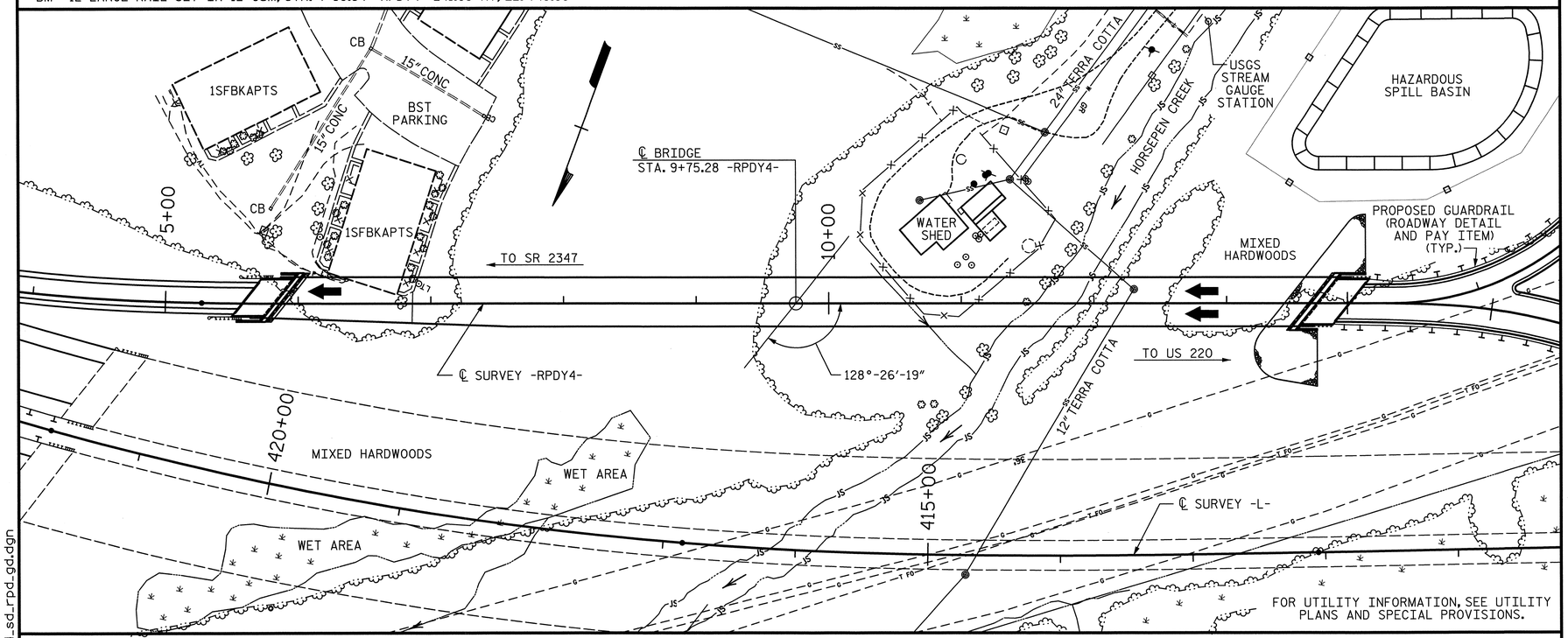

LOCATION SKETCH

NOTES:

ASSUMED LIVE LOAD = HL-93 OR ALTERNATE LOADING.

FOR OTHER DESIGN DATA AND GENERAL NOTES, SEE "STANDARD NOTES" SHEET.

THIS BRIDGE HAS BEEN DESIGNED IN ACCORDANCE WITH THE AASHTO LRFD BRIDGE DESIGN SPECIFICATIONS.

THIS BRIDGE HAS BEEN DESIGNED IN ACCORDANCE WITH "HEC 18-EVALUATING SCOUR AT BRIDGES".

THIS BRIDGE IS LOCATED IN SEISMIC ZONE 1.

PRESTRESSED CONCRETE DECK PANELS MAY BE USED IN LIEU OF METAL STAY-IN-PLACE FORMS IN ACCORDANCE WITH ARTICLE 420-3 OF THE STANDARD SPECIFICATIONS.

REMOVABLE FORMS MAY BE USED IN LIEU OF METAL STAY-IN-PLACE FORMS IN ACCORDANCE WITH ARTICLE 420-3 OF THE STANDARD SPECIFICATIONS.

THE CONTRACTOR SHALL PROVIDE INDEPENDENT ASSURANCE SAMPLES OF REINFORCING STEEL AS FOLLOWS: FOR PROJECTS REQUIRING UP TO 400 TONS OF REINFORCING STEEL, ONE 30 INCH SAMPLE OF EACH SIZE BAR USED, AND FOR PROJECTS REQUIRING OVER 400 TONS OF REINFORCING STEEL, TWO 30 INCH SAMPLES OF EACH SIZE BAR USED. THE BARS FROM WHICH THE SAMPLES ARE TAKEN MUST THEN BE SPLICED WITH REPLACEMENT BARS OF THE SIZE AND LENGTH OF THE SAMPLE, PLUS A MINIMUM LAP SPLICE OF THIRTY BAR DIAMETERS. PAYMENT FOR THE SAMPLES OF REINFORCING STEEL SHALL BE CONSIDERED INCIDENTAL TO VARIOUS PAY ITEMS.

NEEDLE BEAMS WILL NOT BE ALLOWED UNLESS OTHERWISE CALLED FOR ON THE PLANS OR APPROVED BY THE ENGINEER.

FOR SUBMITTAL OF WORKING DRAWINGS, SEE SPECIAL PROVISIONS.

FOR FALSEWORK AND FORMWORK, SEE SPECIAL PROVISIONS.

FOR CRANE SAFETY, SEE SPECIAL PROVISIONS.

FOR GROUT FOR STRUCTURES, SEE SPECIAL PROVISIONS.

FOR EROSION CONTROL MEASURES, SEE EROSION CONTROL PLANS.

FOR PLACING LOAD ON STRUCTURE MEMBERS, SEE SPECIAL PROVISIONS.

THE LOCATION OF THE CONSTRUCTION JOINT IN THE DRILLED PIERS IS BASED ON AN APPROXIMATE GROUND LINE ELEVATION. IF THE CONSTRUCTION JOINT IS ABOVE THE ACTUAL GROUND ELEVATION, THE CONTRACTOR SHALL PLACE THE CONSTRUCTION JOINT 1 FT. BELOW THE GROUND LINE.

BENTS 2 AND 3 HAVE BEEN DESIGNED IN SUCH A MANNER THAT WILL ALLOW THE IN-SITU SOILS TO BE EXCAVATED TO A DEPTH OF 20 FEET BELOW THE EXISTING GROUND SURFACE ACROSS THE ENTIRE WIDTH AND ALONG THE ENTIRE LENGTH OF COLONIAL PIPELINE COMNPANY'S EASEMENT WITHOUT CAUSING ANY NEGATIVE IMPACTS TO THE STRENGTH, STABILITY OR SERVICEABILITY OF THE BRIDGE OR ITS FOUNDATIONS.

THE CLASS AA CONCRETE IN THE BRIDGE DECK SHALL CONTAIN FLY ASH OR GROUND GRANULATED BLAST FURNACE SLAG AT THE SUBSTITUTION RATE SPECIFIED IN ARTICLE 1024-1 AND IN ACCORDANCE WITH ARTICLES 1024-5 AND 1024-6 OF THE STANDARD SPECIFICATIONS. NO PAYMENT WILL BE MADE FOR THIS SUBSTITUTION AS IT IS CONSIDERED INCIDENTAL TO THE COST OF THE REINFORCED CONCRETE DECK SLAB.

PROJECT NO. U-2524C

GUILFORD COUNTY

STATION: 9+75.28 -RPDY4-

SHEET 5 OF 7

STATE OF NORTH CAROLINA
DEPARTMENT OF TRANSPORTATION
RALEIGH

GENERAL DRAWING
FOR BRIDGE ON RAMP D
OVER HORSEPEN CREEK
BETWEEN SR 2347
AND US 220
-RAMP D-

PLANS PREPARED BY:
SIMPSON ENGINEERS & ASSOCIATES
5640 Dillard Drive
Suite 200
Cary, NC 27518
(919) 852-0468
(919) 852-0598 (Fax)
www.simpsonengr.com
LICENSURE NO. C-2521

NORTH CAROLINA PROFESSIONAL SEAL 023906 ENGINEER MARK A. AVERETTE
6-5-2013

REVISIONS						SHEET NO.
NO.	BY:	DATE:	NO.	BY:	DATE:	S-763
1			3			TOTAL SHEETS
2			4			836

DRAWN BY: T. BANKOVICH DATE: 4-13
CHECKED BY: M. AVERETTE DATE: 4-13
DESIGN ENGINEER OF RECORD: M. AVERETTE DATE: 4-13

6/5/2013 2:35:22 PM G:\Projects\2011\U-2524 (Guilford Co)\Structures\Ramp D\Drawings\Final\U-2524_sd_rpd_gd.dgn

TOTAL BILL OF MATERIAL

	4'-0" DIA. DRILLED PIERS IN SOIL	4'-0" DIA. DRILLED PIERS NOT IN SOIL	SID INSPECTIONS	CSL TESTING	REINFORCED CONCRETE DECK SLAB	GROOVING BRIDGE FLOORS	CLASS A CONCRETE (BRIDGE)	BRIDGE APPROACH SLABS	REINFORCING STEEL (BRIDGE)	SPIRAL COLUMN REINFORCING STEEL	54" PRESTRESSED CONCRETE GIRDERS		MODIFIED 72" PRESTRESSED CONC GIRDERS		HP 12x53 STEEL PILES		STEEL PILE POINTS	CONCRETE BARRIER RAIL
	LF	LF	EA	EA	SF	SF	CY	LS	LB	LB	NO.	LF	NO.	LF	NO.	LF	EA	LF
SUPERSTRUCTURE					28,626	24,952					8	733.04	20	2,348.33				1,607.8
END BENT 1							52.5		6,335						7	105	7	
BENT 1	44.0	27.0		1			37.0		10,153	2,171								
BENT 2	36.3	47.0		1			73.2		17,476	3,155								
BENT 3	56.5	35.0		1			51.5		18,150	3,606								
BENT 4	76.0	32.0		1			61.3		18,704	3,571								
BENT 5	91.8	26.0		1			45.5		20,509	3,777								
BENT 6	105.0	27.0		1			45.5		19,897	4,125								
END BENT 2							72.2		8,812						10	450		
TOTAL	409.6	194.0	2	6	28,626	24,952	438.7	LS	120,036	20,405	8	733.04	20	2,348.33	17	555	7	1,607.8

TOTAL BILL OF MATERIAL (CONT'D.)

	RIP RAP CLASS II (2'-0" THICK)	GEOTEXTILE FOR DRAINAGE	ELASTOMERIC BEARINGS	EXPANSION JOINT SEALS	STRUCTURE DRAINAGE SYSTEM AT STA. 9+75.28 -RPDY4-
	TON	SY	LS	LS	LS
SUPERSTRUCTURE					
END BENT 1	30	35			
BENT 1					
BENT 2					
BENT 3					
BENT 4					
BENT 5					
BENT 6					
END BENT 2	360	400			
TOTAL	390	435	LS	LS	LS

PROJECT NO. U-2524C

GUILFORD COUNTY

STATION: 9+75.28 -RPDY4-

SHEET 6 OF 7

STATE OF NORTH CAROLINA
DEPARTMENT OF TRANSPORTATION
RALEIGH

GENERAL DRAWING
FOR BRIDGE ON RAMP D
OVER HORSEPEN CREEK
BETWEEN SR 2347
AND US 220
-RAMP D-

PLANS PREPARED BY:

SIMPSON ENGINEERS & ASSOCIATES
5640 Dillard Drive
Suite 200
Cary, NC 27518
(919) 852-0468
(919) 852-0598 (Fax)
www.simpsonengr.com
LICENSURE NO. C-2521

NORTH CAROLINA PROFESSIONAL SEAL 023906 ENGINEER MARK A. AVERETTE
6-5-2013

REVISIONS								SHEET NO.
NO.	BY:	DATE:	NO.	BY:	DATE:			S-764
1			3					TOTAL SHEETS
2			4					836

DRAWN BY: R. SEALEY DATE: 4-13
CHECKED BY: M. AVERETTE DATE: 4-13
DESIGN ENGINEER OF RECORD: M. AVERETTE DATE: 4-13

6/21/2013 12:25:25 PM G:\Projects\2011\U-2524 (Guilford Co)\Structures\Ramp D\Drawings\Final\U-2524_sd_rpd_totalbom.dgn

LOAD AND RESISTANCE FACTOR RATING (LRFR) SUMMARY FOR PRESTRESSED CONCRETE GIRDERS

LEVEL		VEHICLE	WEIGHT (W) (TONS)	CONTROLLING LOAD RATING (#)	MINIMUM RATING FACTORS (RF)	TONS = W x RF	STRENGTH I LIMIT STATE											SERVICE III LIMIT STATE						COMMENT NUMBER
								MOMENT					SHEAR						MOMENT					
							LIVE-LOAD FACTORS (γ_{LL})	DISTRIBUTION FACTORS (DF)	RATING FACTOR	SPAN	GIRDER LOCATION	DISTANCE FROM LEFT END OF SPAN (ft)	DISTRIBUTION FACTORS (DF)	RATING FACTOR	SPAN	GIRDER LOCATION	DISTANCE FROM LEFT END OF SPAN (ft)	LIVE-LOAD FACTORS (γ_{LL})	DISTRIBUTION FACTORS (DF)	RATING FACTOR	SPAN	GIRDER LOCATION	DISTANCE FROM LEFT END OF SPAN (ft)	
DESIGN LOAD RATING		HL-93 (INVENTORY)	N/A	1	1.00	- -	1.75	0.828	1.33	3-7	4	59.125	0.858	1.00	2	3	82.725	0.80	0.828	1.05	3-7	4	59.125	
		HL-93 (OPERATING)	N/A		1.33	- -	1.35	0.828	1.73	3-7	4	59.125	0.855	1.33	2	2	83.325	N/A	- -	- -	- -	- -	- -	
		HS-20 (INVENTORY)	36.000	2	1.36	49.0	1.75	0.828	1.93	3-7	4	59.125	0.855	1.36	2	2	83.325	0.80	0.828	1.53	3-7	4	59.125	
		HS-20 (OPERATING)	36.000		1.79	64.4	1.35	0.828	2.50	3-7	4	59.125	0.858	1.79	2	3	82.725	N/A	- -	- -	- -	- -	- -	
LEGAL LOAD RATING	SINGLE VEHICLE (SV)	SH	12.500		3.93	49.1	1.40	0.791	6.25	2	1	46.825	0.858	4.79	2	3	82.725	0.80	0.791	3.93	2	1	46.825	
		S3C	21.500		2.28	49.0	1.40	0.791	3.61	2	1	46.825	0.855	2.73	2	2	83.325	0.80	0.791	2.28	2	1	46.825	
		S3A	22.750		2.16	49.1	1.40	0.791	3.43	2	1	46.825	0.855	2.64	2	2	83.325	0.80	0.791	2.16	2	1	46.825	
		S4A	26.750		1.90	50.8	1.40	0.791	3.01	2	1	46.825	0.858	2.28	2	3	82.725	0.80	0.791	1.90	2	1	46.825	
		S5A	30.500		1.67	50.9	1.40	0.791	2.65	2	1	46.825	0.855	2.08	2	2	83.325	0.80	0.791	1.67	2	1	46.825	
		S6A	34.500		1.51	52.1	1.40	0.791	2.40	2	1	46.825	0.858	1.79	2	3	82.725	0.80	0.791	1.51	2	1	46.825	
		S7B	38.500		1.37	52.7	1.40	0.791	2.18	2	1	46.825	0.855	1.66	2	2	83.325	0.80	0.791	1.37	2	1	46.825	
		S7A	40.000	3	1.35	54.0	1.40	0.828	2.15	3-7	4	59.125	0.858	1.70	2	3	82.725	0.80	0.791	1.35	2	1	46.825	
	TRUCK TRACTOR SEMI-TRAILER (TTST)	T4A	28.250		1.86	52.5	1.40	0.791	2.95	2	1	46.825	0.858	2.21	2	3	82.725	0.80	0.791	1.86	2	1	46.825	
		T5B	32.000		1.64	52.5	1.40	0.791	2.60	2	1	46.825	0.855	1.99	2	2	83.325	0.80	0.791	1.64	2	1	46.825	
		T6A	36.000		1.49	53.6	1.40	0.828	2.37	3-7	4	59.125	0.858	1.85	2	3	82.725	0.80	0.791	1.49	2	1	46.825	
		T7A	40.000		1.38	55.2	1.40	0.828	2.18	3-7	4	59.125	0.855	1.70	2	2	83.325	0.80	0.828	1.38	3-7	4	59.125	
		T7B	40.000		1.45	58.0	1.40	0.828	2.28	3-7	4	59.125	0.858	1.60	2	3	82.725	0.80	0.828	1.45	3-7	4	59.125	

LOAD FACTORS:

DESIGN LOAD RATING FACTORS	LIMIT STATE	γ_{DC}	γ_{DW}
	STRENGTH I	1.25	1.50
	SERVICE III	1.00	1.00

NOTES:

MINIMUM RATING FACTORS ARE BASED ON THE STRENGTH I AND SERVICE III LIMIT STATES.

ALLOWABLE STRESSES FOR SERVICE III LIMIT STATE ARE AS REQUIRED FOR DESIGN.

(#) CONTROLLING LOAD RATING

(1) DESIGN LOAD RATING (HL-93)

(2) DESIGN LOAD RATING (HS-20)

(3) LEGAL LOAD RATING **

** SEE CHART FOR VEHICLE TYPE

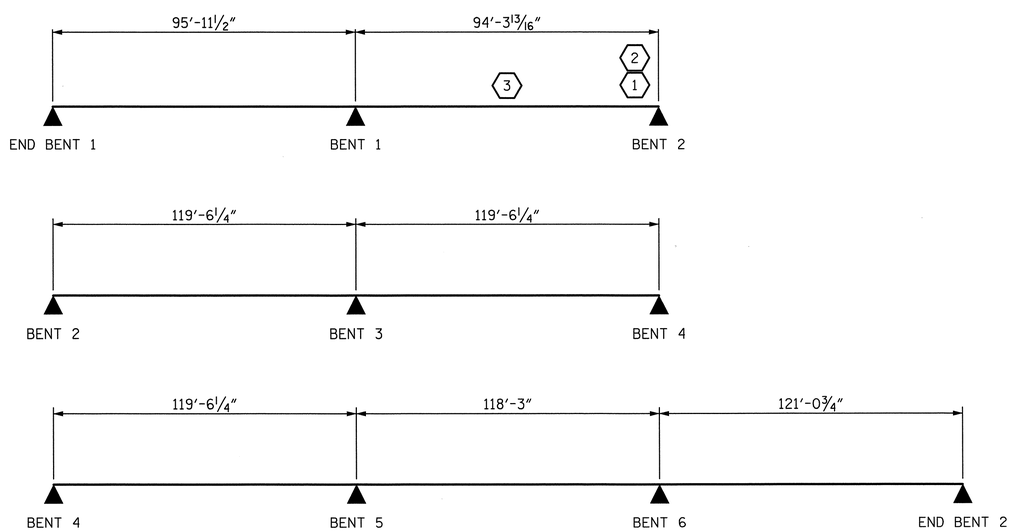

LRFR SUMMARY

PROJECT NO. U-2524C

GUILFORD COUNTY

STATION: 9+75.28 -RPDY4-

SHEET 7 OF 7

STATE OF NORTH CAROLINA
DEPARTMENT OF TRANSPORTATION
RALEIGH

GENERAL DRAWING
FOR BRIDGE ON RAMP D
OVER HORSEPEN CREEK
BETWEEN SR 2347
AND US 220
-RAMP D-

PLANS PREPARED BY:
SIMPSON ENGINEERS & ASSOCIATES
5640 Dillard Drive
Suite 200
Cary, NC 27518
(919) 852-0468
(919) 852-0598 (Fax)
www.simpsonengr.com
LICENSURE NO. C-2521

NORTH CAROLINA PROFESSIONAL SEAL 023906 ENGINEER MARK A. AVERETTE
6-5-2013

REVISIONS						SHEET NO.
NO.	BY:	DATE:	NO.	BY:	DATE:	S-765
1			3			TOTAL SHEETS
2			4			836

DRAWN BY: R. SEALEY DATE: 4-13
CHECKED BY: M. AVERETTE DATE: 4-13
DESIGN ENGINEER OF RECORD: M. AVERETTE DATE: 4-13

6/5/2013 2:35:32 PM G:\Projects\2011\U-2524 (Guilford Co)\Structures\Ramp D\Drawings\Final\U-2524_sd_rpd_lrfr.dgn

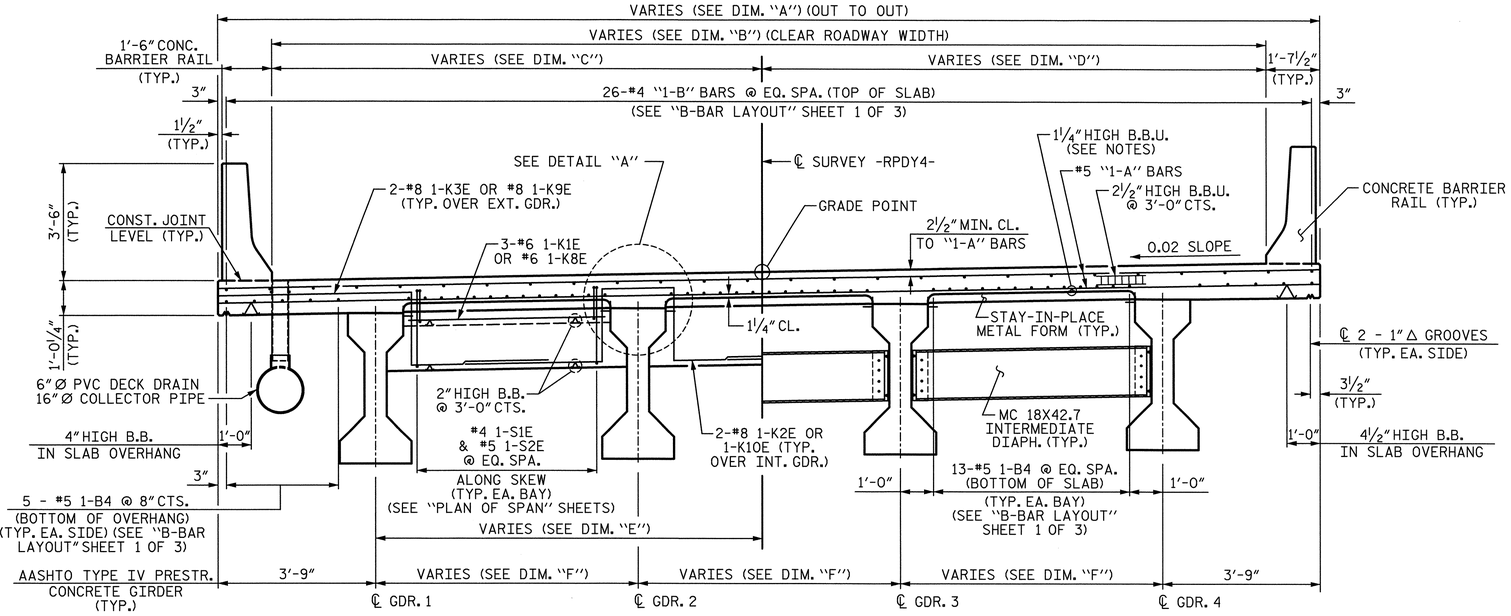

EXPANSION DIAPHRAGMS
(END BENT 1 & BENT 2)

INTERMEDIATE DIAPHRAGMS

TYPICAL SECTION - 2 SPAN CONTINUOUS UNIT 1

DIAPHRAGM REINFORCING TYPICAL EACH BAY

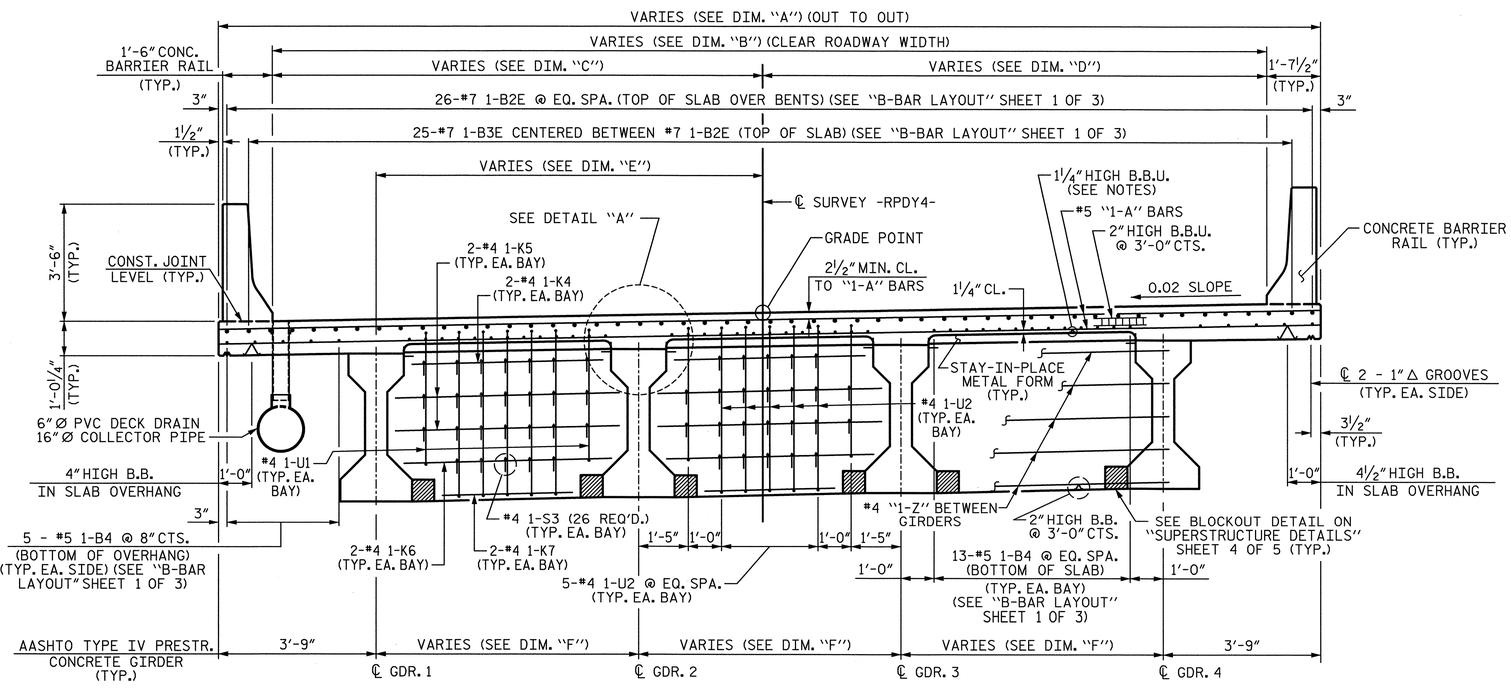

CONTINUOUS BENT DIAPHRAGMS
BENT 1

TYPICAL SECTION - 2 SPAN CONTINUOUS UNIT 1

DIAPHRAGM REINFORCING TYPICAL EACH BAY

NOTES:

PROVIDE 1¼" HIGH BEAM BOLSTERS UPPER AT 4'-0" CTS. ATOP THE METAL STAY-IN-PLACE FORMS TO SUPPORT THE BOTTOM MAT OF "A" BARS. WHEN USING REMOVABLE FORMS, PROVIDE CONTINUOUS HIGH CHAIRS FOR METAL DECK (C.H.C.M.) @ 4'-0" CTS. WITH A HEIGHT TO SUPPORT THE BOTTOM MAT OF "A" BARS A CLEAR DISTANCE OF 2½" ABOVE THE TOP OF THE REMOVABLE FORM.

LONGITUDINAL STEEL MAY BE SHIFTED SLIGHTLY, AS NECESSARY, TO AVOID INTERFERENCE WITH STIRRUPS IN PRESTRESSED CONCRETE GIRDERS.

BARRIER RAIL IN A CONTINUOUS UNIT SHALL NOT BE CAST UNTIL ALL SLAB CONCRETE IN THAT UNIT HAS BEEN CAST AND HAS REACHED A MINIMUM COMPRESSIVE STRENGTH OF 3,000 PSI.

PREVIOUSLY CAST CONCRETE IN A CONTINUOUS UNIT SHALL HAVE ATTAINED A MINIMUM COMPRESSIVE STRENGTH OF 3,000 PSI BEFORE ADDITIONAL CONCRETE IS CAST IN THE UNIT.

SEE "CLOSED DRAINAGE SYSTEM DETAILS" SHEETS FOR DRAINAGE DETAILS AND LOCATIONS.

CONTINUOUS UNIT 1

LOCATION	DIM. "A"	DIM. "B"	DIM. "C"	DIM. "D"	DIM. "E"	DIM. "F"
W.P. #D1	30'-10"	27'-7"	18'-4"	9'-3"	16'-2½"	7'-9 5/16"
W.P. #D2	34'-1 5/16"	30'-10 5/16"	18'-2 9/16"	12'-7 11/16"	16'- 1/16"	8'-10 7/16"
W.P. #D3 (SPAN 2 SIDE)	37'-3⅞"	34'-0⅞"	18'-0⅛"	16'-0¾"	15'-10⅝"	9'-11 5/16"

DIMENSIONS IN TABLE ARE BASED ON DISTANCES BETWEEN GIRDERS ALONG FILL FACE OF END BENT AND BENT CONTROL LINES, THE SKEW ANGLE TO THE ℄ SURVEY -RPDY4-, AND OVERHANGS THAT ARE A CONSTANT 3'-9" PERPENDICULAR DISTANCE FROM EXTERIOR GIRDERS.

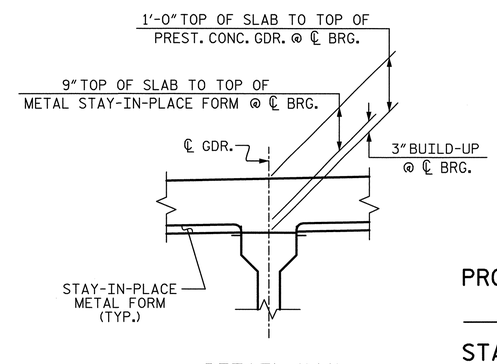

DETAIL "A"

PROJECT NO. U-2524C
GUILFORD COUNTY
STATION: 9+75.28 -RPDY4-

SHEET 1 OF 3

STATE OF NORTH CAROLINA
DEPARTMENT OF TRANSPORTATION
RALEIGH
SUPERSTRUCTURE

TYPICAL SECTION
(2 SPAN CONTINUOUS UNIT 1)
(SPANS 1 & 2)

-RAMP D-

PLANS PREPARED BY:
SIMPSON ENGINEERS & ASSOCIATES
5640 Dillard Drive
Suite 200
Cary, NC 27518
(919) 852-0468
(919) 852-0598 (Fax)
www.simpsonengr.com
LICENSURE NO. C-2521

NORTH CAROLINA PROFESSIONAL SEAL 023908 ENGINEER MARK A. AVERETTE
6-5-2013

REVISIONS						SHEET NO.
NO.	BY:	DATE:	NO.	BY:	DATE:	S-766
1			3			TOTAL SHEETS
2			4			836

DRAWN BY: R. SEALEY DATE: 4-13
CHECKED BY: M. AVERETTE DATE: 4-13
DESIGN ENGINEER OF RECORD: M. AVERETTE DATE: 4-13

6/5/2013 2:35:36 PM G:\Projects\2011\U-2524 (Guilford Co)\Structures\Ramp D\Drawings\Final\U-2524_sd_rpd_ts.dgn

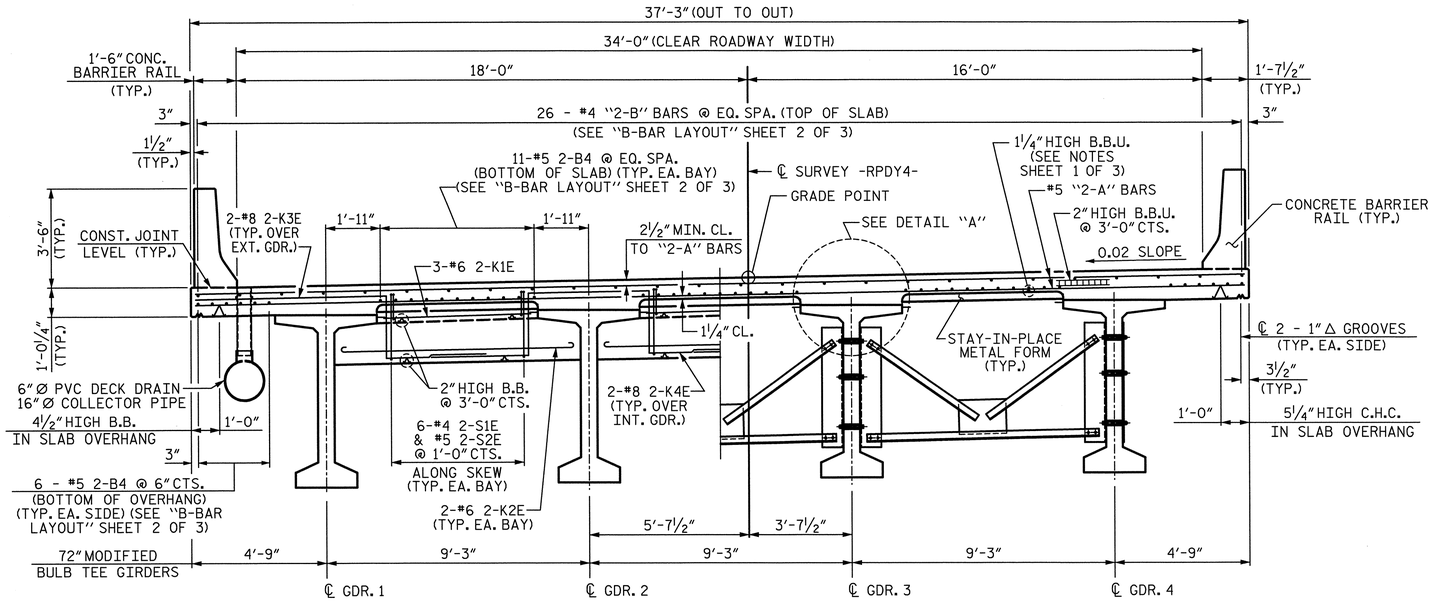

EXPANSION DIAPHRAGMS

BENT 2 & BENT 4

INTERMEDIATE DIAPHRAGMS

TYPICAL SECTION - 2 SPAN CONTINUOUS UNIT 2

DIAPHRAGM REINFORCING TYPICAL EACH BAY

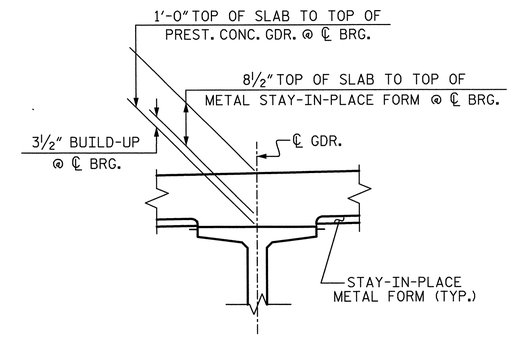

DETAIL "A"

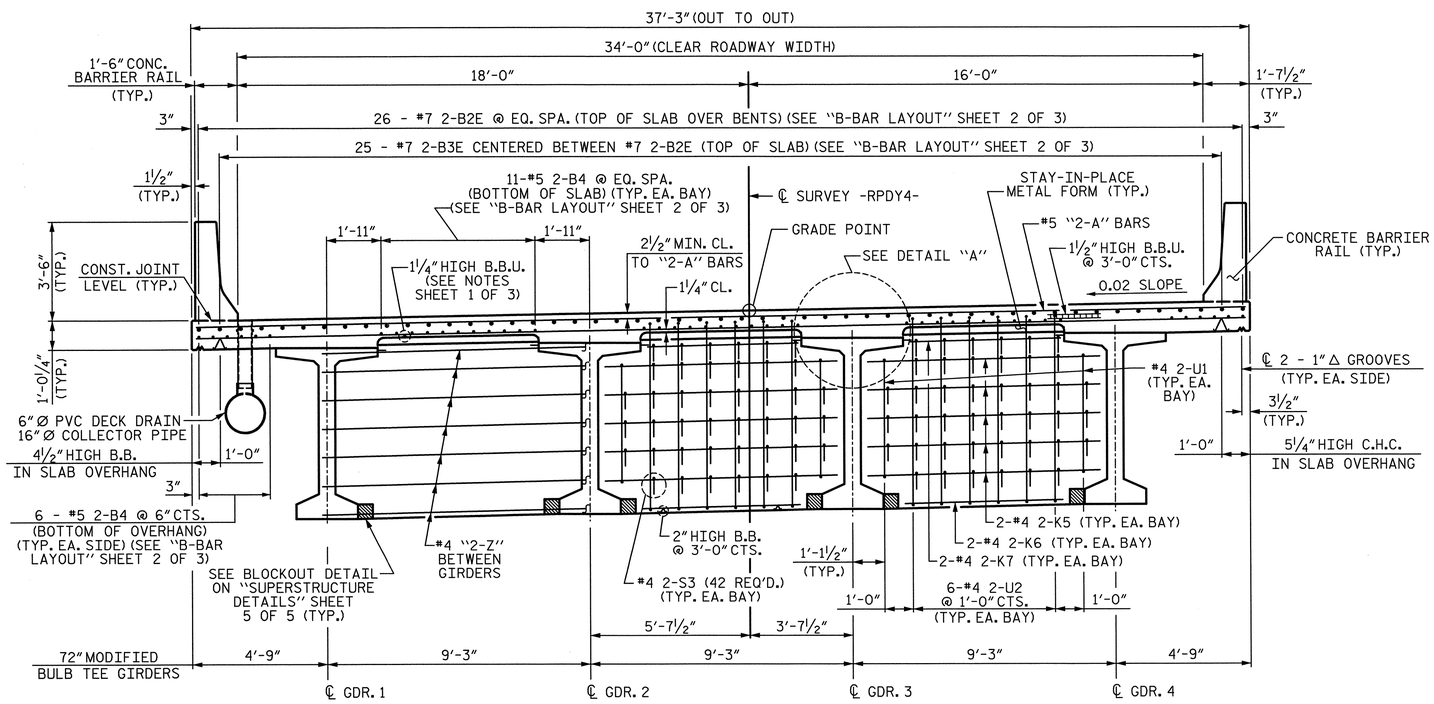

CONTINUOUS BENT DIAPHRAGM

BENT 3

TYPICAL SECTION - 2 SPAN CONTINUOUS UNIT 2

DIAPHRAGM REINFORCING TYPICAL EACH BAY

PROJECT NO. U-2524C

GUILFORD COUNTY

STATION: 9+75.28 -RPDY4-

SHEET 2 OF 3

STATE OF NORTH CAROLINA
DEPARTMENT OF TRANSPORTATION
RALEIGH

SUPERSTRUCTURE

TYPICAL SECTION
(2 SPAN CONTINUOUS UNIT 2)
(SPANS 3 & 4)

-RAMP D-

REVISIONS								SHEET NO.
NO.	BY:	DATE:	NO.	BY:	DATE:			S-767
1			3					TOTAL SHEETS
2			4					836

PLANS PREPARED BY:

SIMPSON ENGINEERS & ASSOCIATES
5640 Dillard Drive
Suite 200
Cary, NC 27518
(919) 852-0468
(919) 852-0598 (Fax)
www.simpsonengr.com
LICENSURE NO. C-2521

NORTH CAROLINA PROFESSIONAL SEAL 023906 ENGINEER MARK A. AVERETTE
6-5-2013

DRAWN BY: R. SEALEY DATE: 4-13
CHECKED BY: M. AVERETTE DATE: 4-13
DESIGN ENGINEER OF RECORD: M. AVERETTE DATE: 4-13

6/5/2013 2:35:41 PM G:\Projects\2011\U-2524 (Guilford Co)\Structures\Ramp D\Drawings\Final\U-2524_sd_rpd_ts.dgn

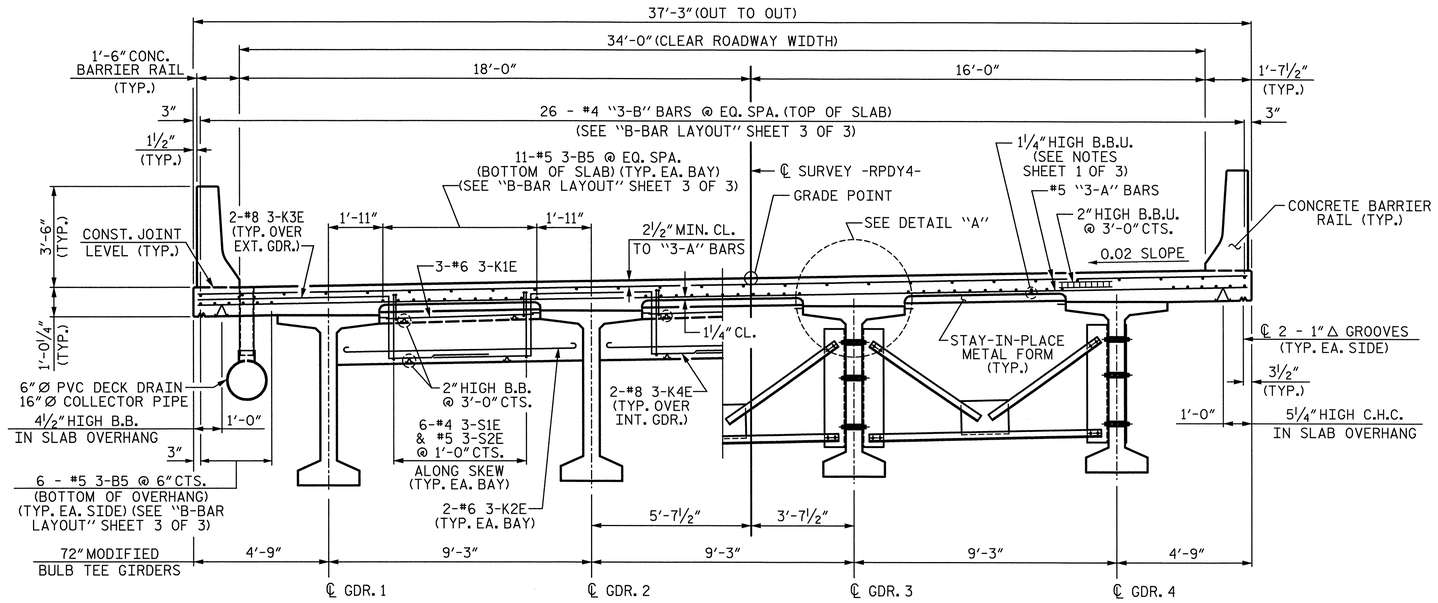

EXPANSION DIAPHRAGMS

BENT 4 & END BENT 2

INTERMEDIATE DIAPHRAGMS

TYPICAL SECTION - 3 SPAN CONTINUOUS UNIT 3

DIAPHRAGM REINFORCING TYPICAL EACH BAY

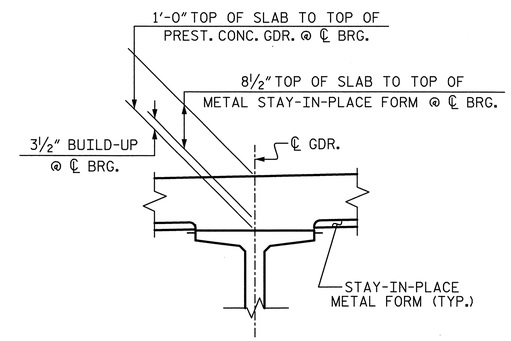

DETAIL "A"

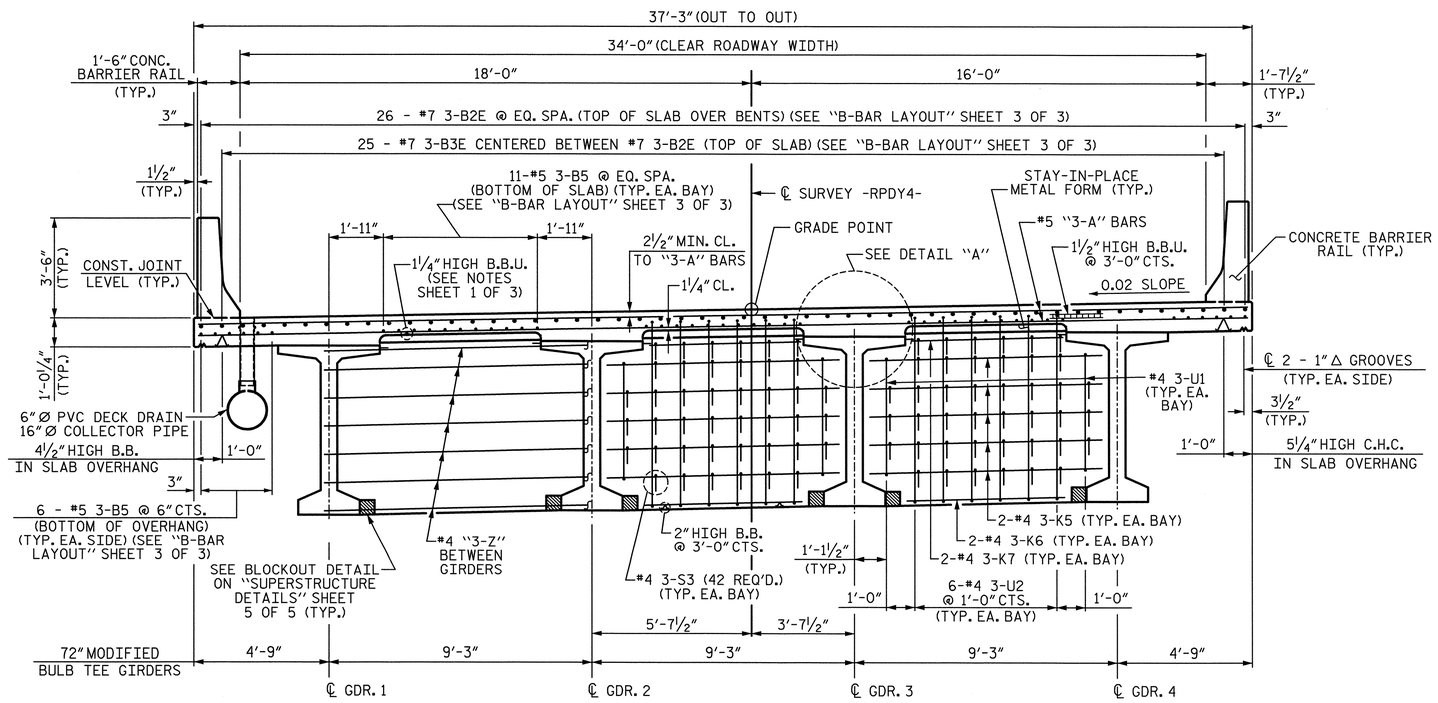

CONTINUOUS BENT DIAPHRAGM

BENT 5 & 6

TYPICAL SECTION - 3 SPAN CONTINUOUS UNIT 3

DIAPHRAGM REINFORCING TYPICAL EACH BAY

PROJECT NO. U-2524C

GUILFORD COUNTY

STATION: 9+75.28 -RPDY4-

SHEET 3 OF 3

STATE OF NORTH CAROLINA
DEPARTMENT OF TRANSPORTATION
RALEIGH

SUPERSTRUCTURE

TYPICAL SECTION
(3 SPAN CONTINUOUS UNIT 3)
(SPANS 5, 6, & 7)

-RAMP D-

REVISIONS								SHEET NO.
NO.	BY:	DATE:	NO.	BY:	DATE:			S-768
1			3					TOTAL SHEETS
2			4					836

PLANS PREPARED BY:

SIMPSON ENGINEERS & ASSOCIATES
5640 Dillard Drive
Suite 200
Cary, NC 27518
(919) 852-0468
(919) 852-0598 (Fax)
www.simpsonengr.com
LICENSURE NO. C-2521

NORTH CAROLINA PROFESSIONAL SEAL 023908 ENGINEER MARK A. AVERETTE
6-5-2013

DRAWN BY: R. SEALEY DATE: 4-13
CHECKED BY: M. AVERETTE DATE: 4-13
DESIGN ENGINEER OF RECORD: M. AVERETTE DATE: 4-13

6/5/2013 2:35:45 PM G:\Projects\2011\U-2524 (Guilford Co)\Structures\Ramp D\Drawings\Final\U-2524_sd_rpd_ts.dgn

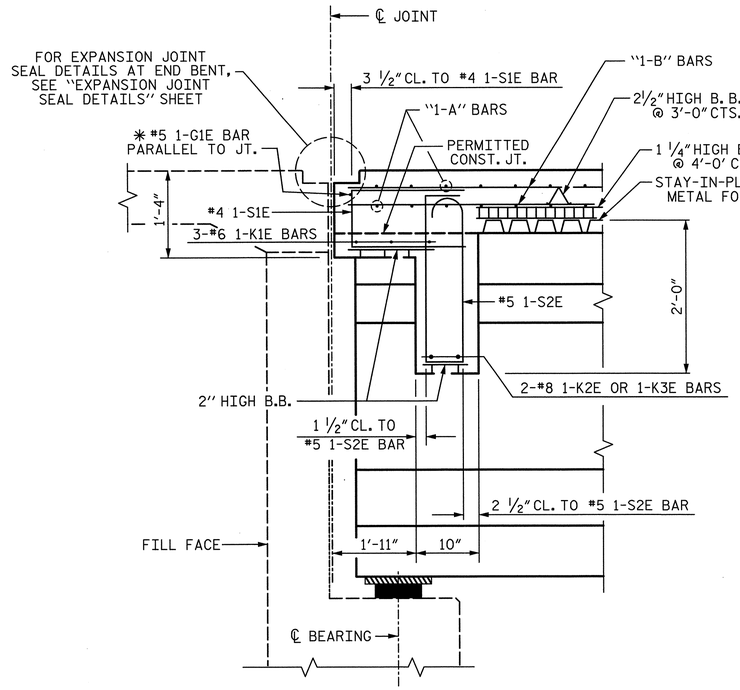

SECTION THRU DIAPHRAGM @ END BENT 1

✱ #5 1-G1E BAR MAY BE SHIFTED SLIGHTLY, AS NECESSARY, TO CLEAR REINFORCING STEEL AND STIRRUPS

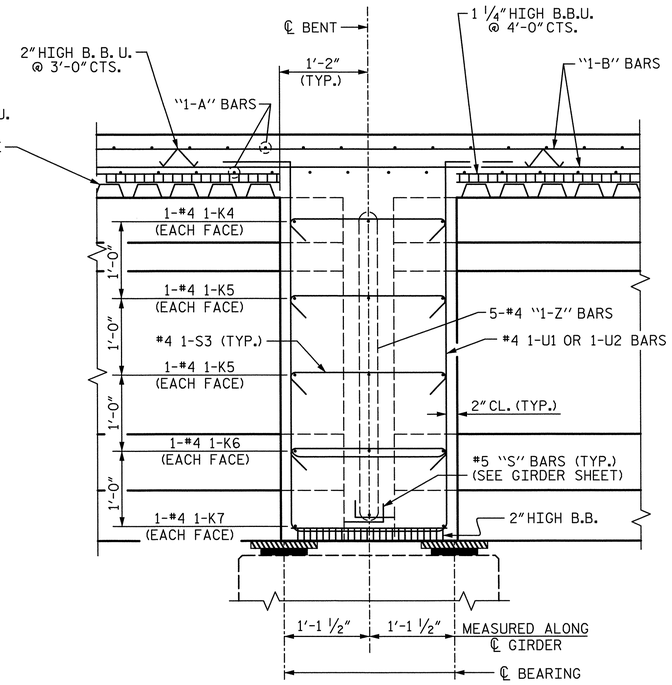

SECTION THRU CONTINUOUS DIAPHRAGM @ BENT 1

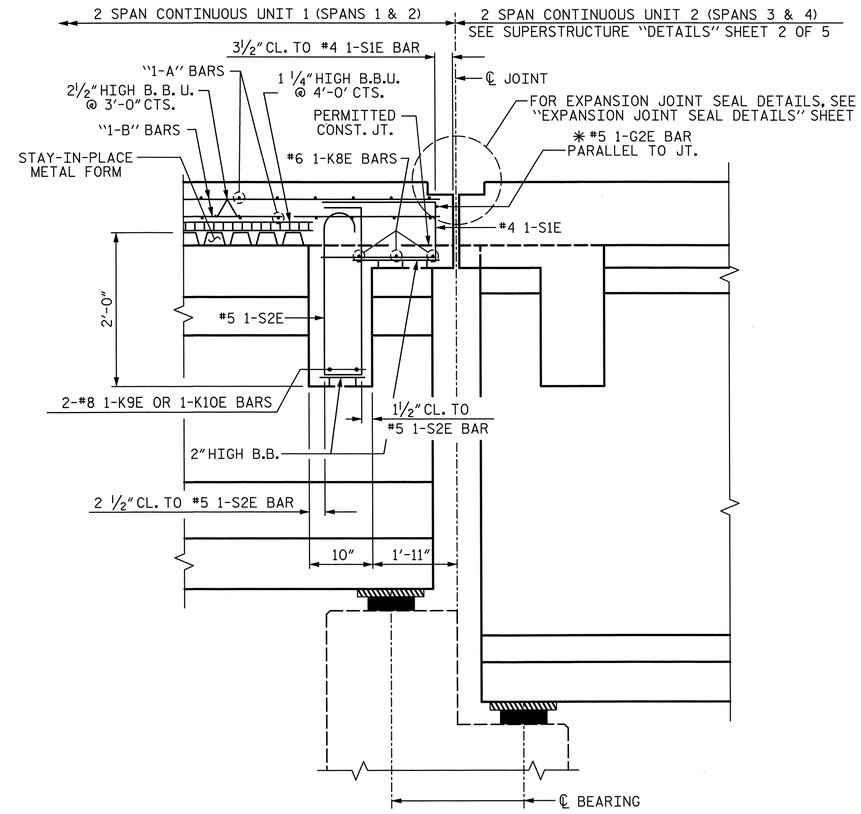

SECTION THRU DIAPHRAGM @ BENT 2

✱ #5 1-G2E BAR MAY BE SHIFTED SLIGHTLY, AS NECESSARY, TO CLEAR REINFORCING STEEL AND STIRRUPS

PROJECT NO. U-2524C

GUILFORD COUNTY

STATION: 9+75.28 -RPDY4-

SHEET 1 OF 5

STATE OF NORTH CAROLINA
DEPARTMENT OF TRANSPORTATION
RALEIGH

SUPERSTRUCTURE

DETAILS
(2 SPAN CONTINUOUS UNIT 1)
(SPANS 1 & 2)

-RAMP D-

REVISIONS						SHEET NO.
NO.	BY:	DATE:	NO.	BY:	DATE:	S-769
1			3			TOTAL SHEETS
2			4			836

PLANS PREPARED BY:
SIMPSON ENGINEERS & ASSOCIATES
5640 Dillard Drive
Suite 200
Cary, NC 27518
(919) 852-0468
(919) 852-0598 (Fax)
www.simpsonengr.com
LICENSURE NO. C-2521

NORTH CAROLINA PROFESSIONAL SEAL 023906 ENGINEER MARK A. AVERETTE
6-5-2013

DRAWN BY: R. SEALEY DATE: 4-13
CHECKED BY: M. AVERETTE DATE: 4-13
DESIGN ENGINEER OF RECORD: M. AVERETTE DATE: 4-13

6/5/2013 2:35:50 PM G:\Projects\2011\U-2524 (Guilford Co)\Structures\Ramp D\Drawings\Final\U-2524_sd_rpd_ts.dgn

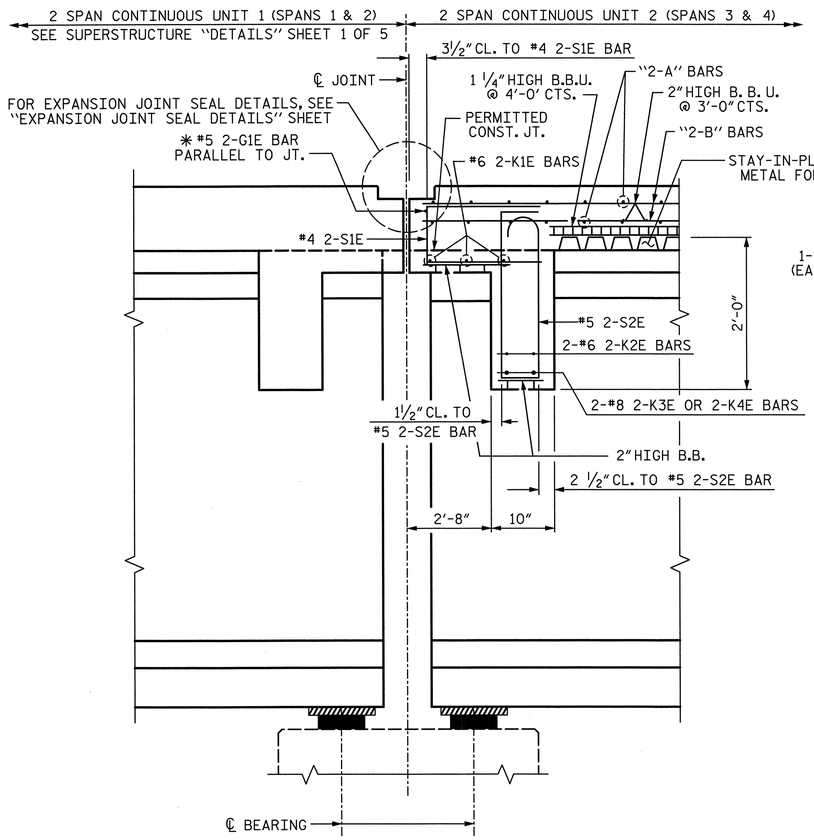

SECTION THRU DIAPHRAGM @ BENT 2

✳ #5 2-G1E BAR MAY BE SHIFTED SLIGHTLY, AS NECESSARY, TO CLEAR REINFORCING STEEL AND STIRRUPS

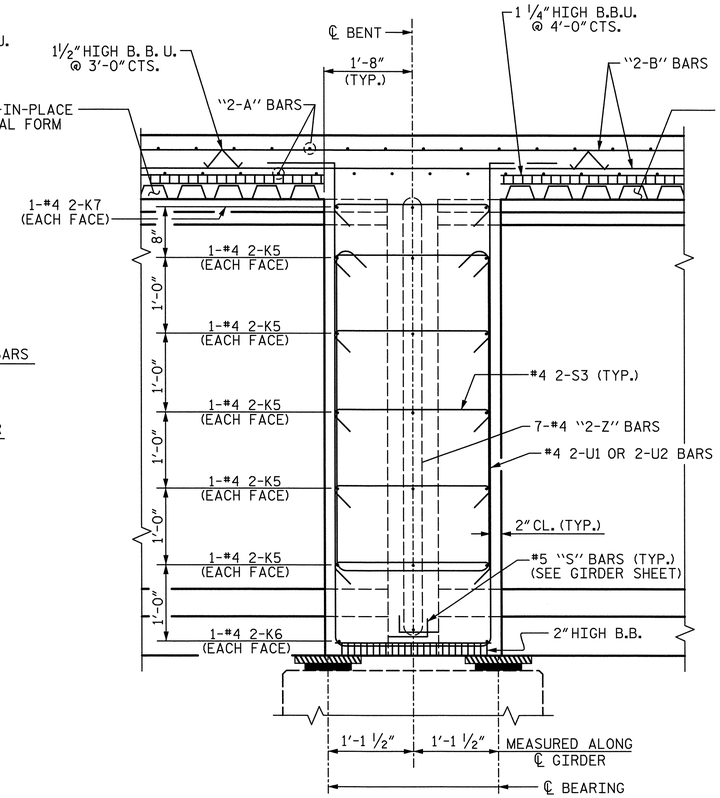

SECTION THRU CONTINUOUS DIAPHRAGM @ BENT 3

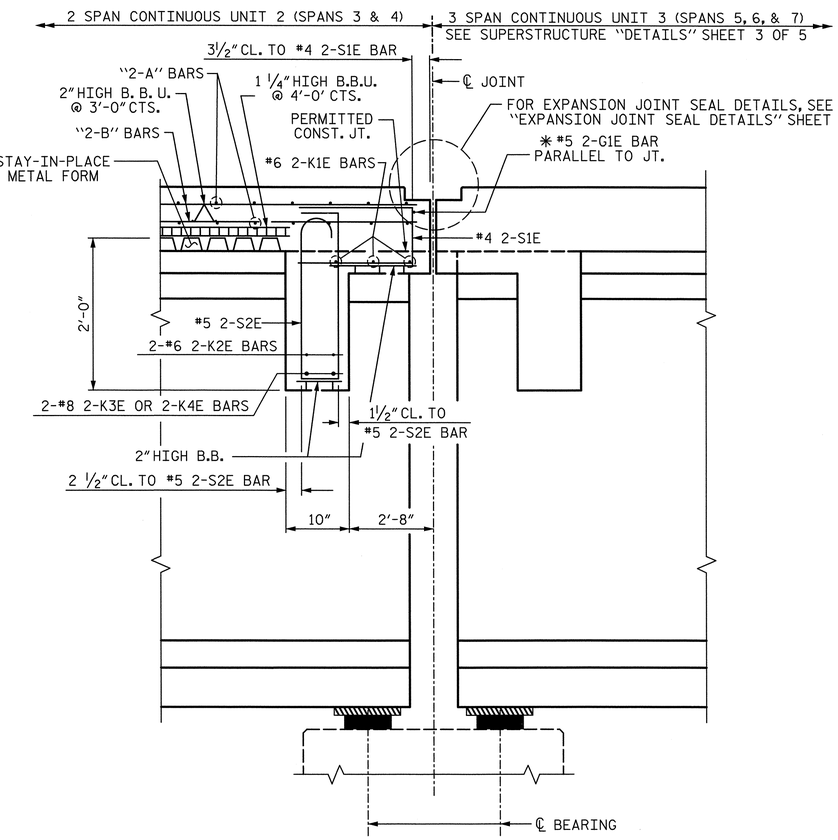

SECTION THRU DIAPHRAGM @ BENT 4

✳ #5 2-G1E BAR MAY BE SHIFTED SLIGHTLY, AS NECESSARY, TO CLEAR REINFORCING STEEL AND STIRRUPS

PROJECT NO. U-2524C

GUILFORD COUNTY

STATION: 9+75.28 -RPDY4-

SHEET 2 OF 5

STATE OF NORTH CAROLINA
DEPARTMENT OF TRANSPORTATION
RALEIGH

SUPERSTRUCTURE

DETAILS
(2 SPAN CONTINUOUS UNIT 2)
(SPANS 3 & 4)

-RAMP D-

PLANS PREPARED BY:
SIMPSON ENGINEERS & ASSOCIATES
5640 Dillard Drive
Suite 200
Cary, NC 27518
(919) 852-0468
(919) 852-0598 (Fax)
www.simpsonengr.com
LICENSURE NO. C-2521

NORTH CAROLINA PROFESSIONAL SEAL 023906 ENGINEER MARK A. AVERETTE, P.E.
6-5-2013

REVISIONS						
NO.	BY:	DATE:	NO.	BY:	DATE:	
1			3			
2			4			

SHEET NO. S-770

TOTAL SHEETS 836

DRAWN BY:	R. SEALEY	DATE:	4-13
CHECKED BY:	M. AVERETTE	DATE:	4-13
DESIGN ENGINEER OF RECORD:	M. AVERETTE	DATE:	4-13

6/5/2013 2:35:54 PM G:\Projects\2011\U-2524 (Guilford Co)\Structures\Ramp D\Drawings\Final\U-2524_sd_rpd_ts.dgn

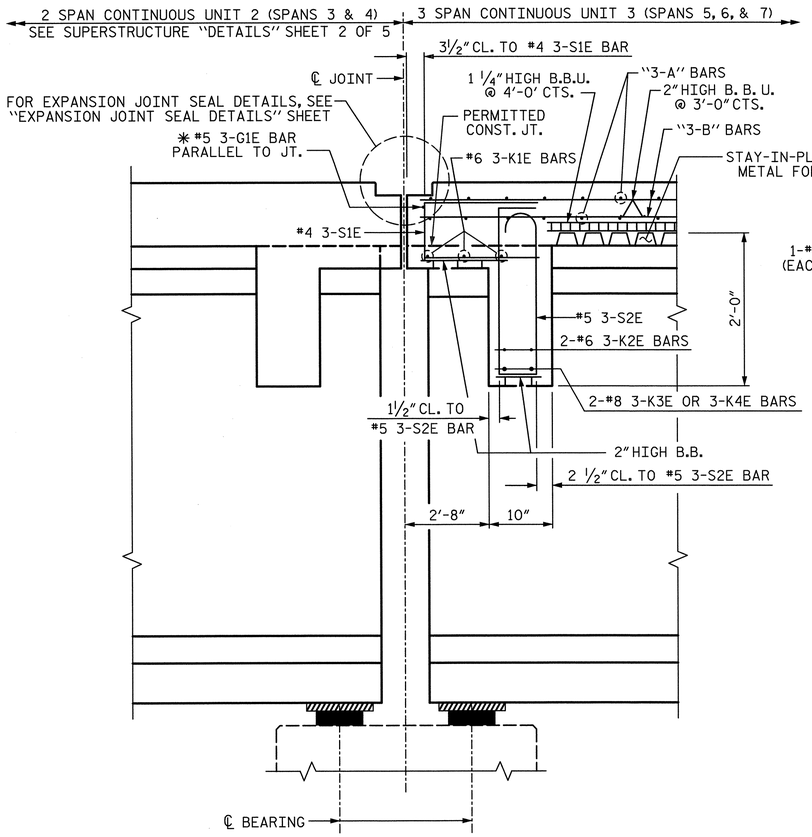

SECTION THRU DIAPHRAGM @ BENT 4

✱ #5 3-G1E BAR MAY BE SHIFTED SLIGHTLY, AS NECESSARY, TO CLEAR REINFORCING STEEL AND STIRRUPS

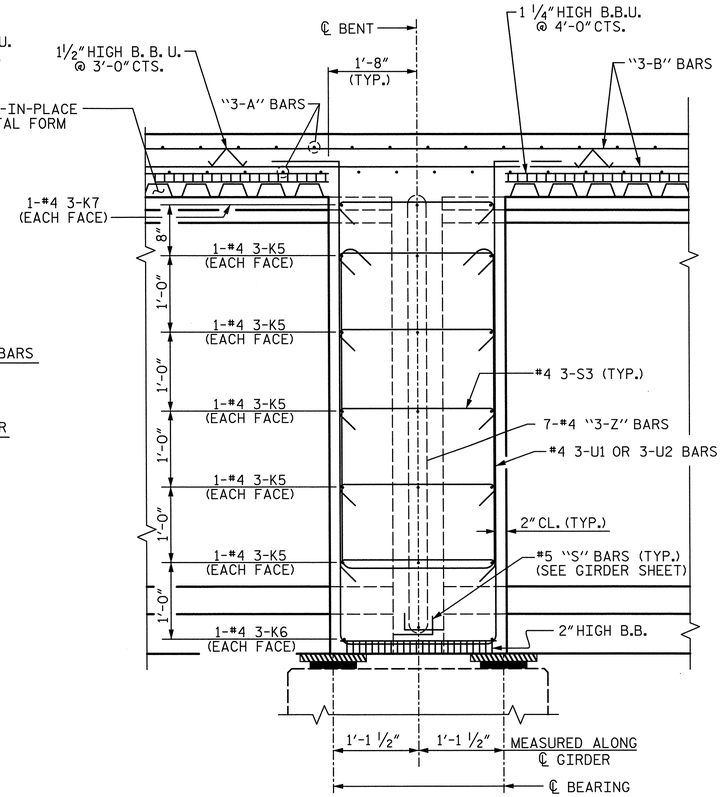

SECTION THRU CONTINUOUS DIAPHRAGM @ BENTS 5 & 6

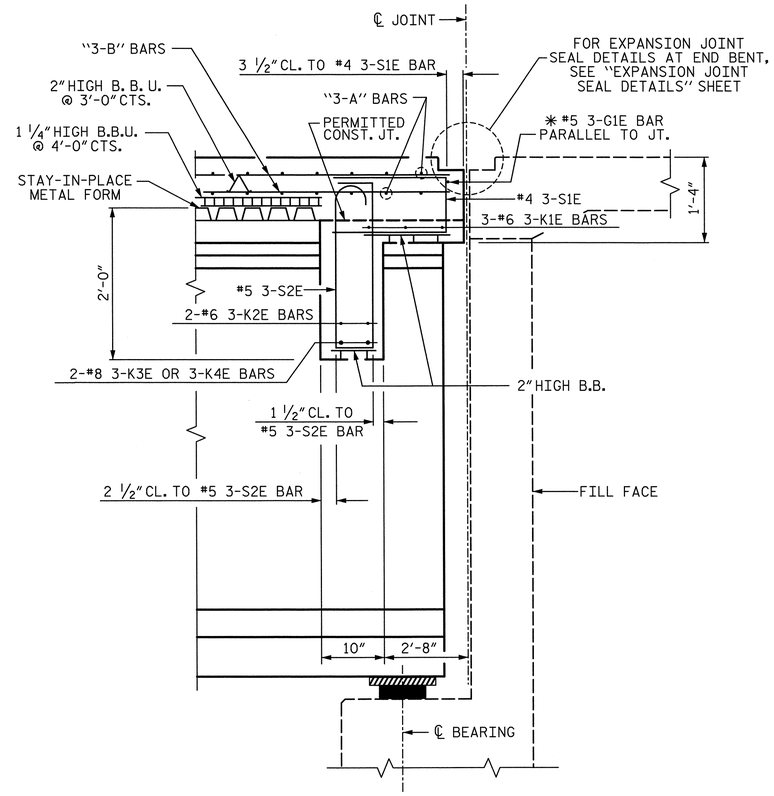

SECTION THRU DIAPHRAGM @ END BENT 2

✱ #5 3-G1E BAR MAY BE SHIFTED SLIGHTLY, AS NECESSARY, TO CLEAR REINFORCING STEEL AND STIRRUPS

PROJECT NO. U-2524C

GUILFORD COUNTY

STATION: 9+75.28 -RPDY4-

SHEET 3 OF 5

STATE OF NORTH CAROLINA
DEPARTMENT OF TRANSPORTATION
RALEIGH

SUPERSTRUCTURE

DETAILS
(3 SPAN CONTINUOUS UNIT 3)
(SPANS 5, 6, & 7)

-RAMP D-

PLANS PREPARED BY:

SIMPSON ENGINEERS & ASSOCIATES
5640 Dillard Drive
Suite 200
Cary, NC 27518
(919) 852-0468
(919) 852-0598 (Fax)
www.simpsonengr.com
LICENSURE NO. C-2521

NORTH CAROLINA PROFESSIONAL SEAL 023906 ENGINEER MARK A. AVERETTE
6-5-2013

REVISIONS						SHEET NO.
NO.	BY:	DATE:	NO.	BY:	DATE:	S-771
1			3			TOTAL SHEETS
2			4			836

DRAWN BY: R. SEALEY DATE: 4-13
CHECKED BY: M. AVERETTE DATE: 4-13
DESIGN ENGINEER OF RECORD: M. AVERETTE DATE: 4-13

6/5/2013 2:35:58 PM G:\Projects\2011\U-2524 (Guilford Co)\Structures\Ramp D\Drawings\Final\U-2524_sd_rpd_ts.dgn

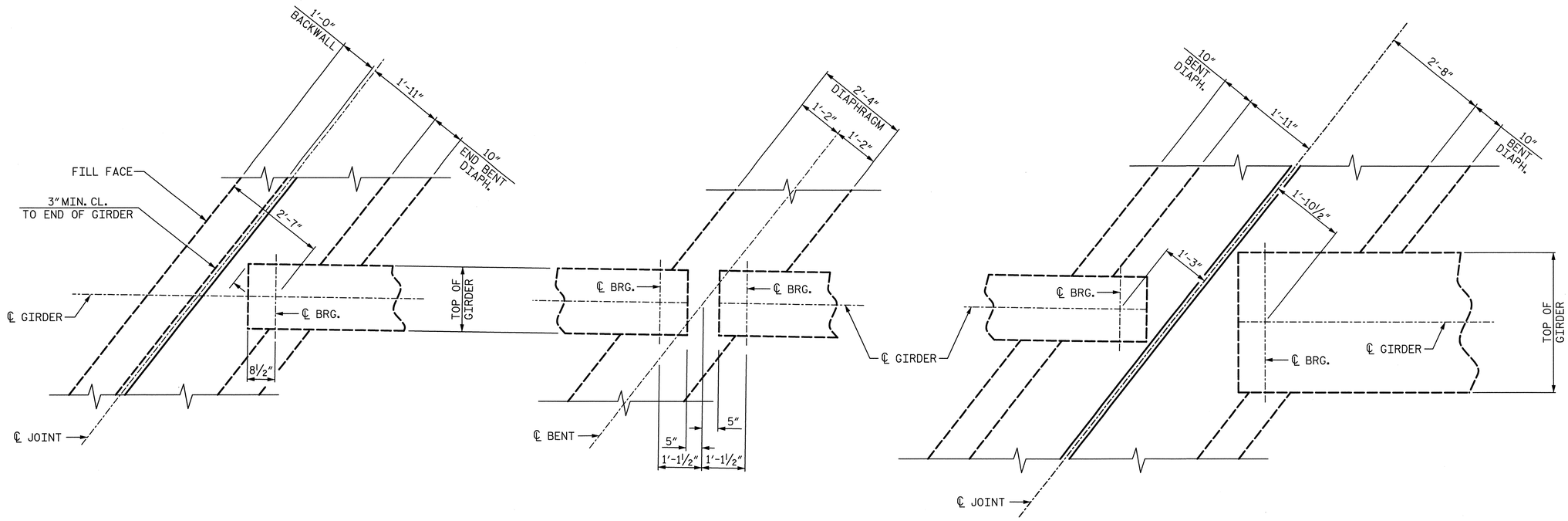

END BENT DIAPHRAGM
@ END BENT 1

CONTINUOUS BENT DIAPHRAGM
@ BENT 1

BENT DIAPHRAGM
@ BENT 2

PLAN OF DIAPHRAGMS

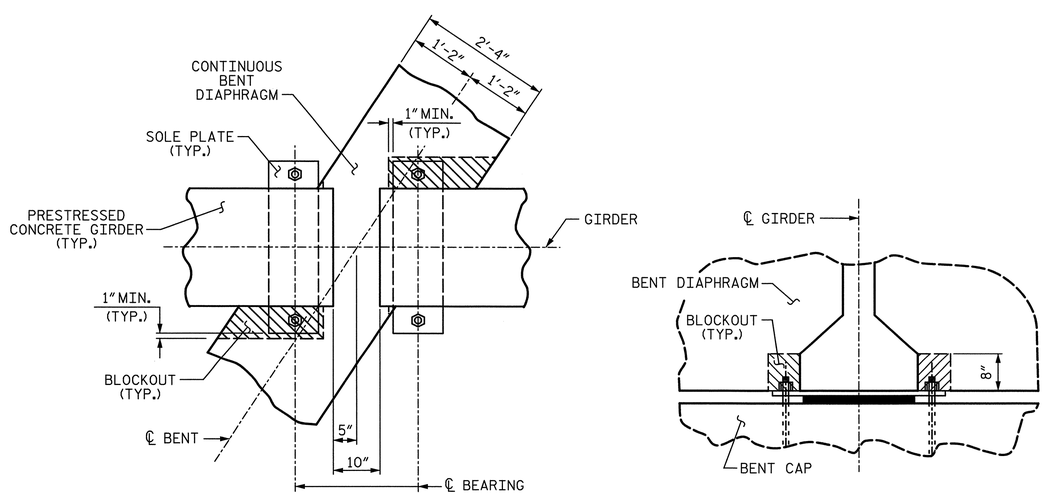

PLAN

SECTION

CONTINUOUS BENT DIAPHRAGM BLOCK-OUT DETAIL

@ BENT 1

PROJECT NO. U-2524C
GUILFORD COUNTY
STATION: 9+75.28 -RPDY4-

SHEET 4 OF 5

STATE OF NORTH CAROLINA
DEPARTMENT OF TRANSPORTATION
RALEIGH
SUPERSTRUCTURE

DETAILS

-RAMP D-

PLANS PREPARED BY:
SIMPSON ENGINEERS & ASSOCIATES
5640 Dillard Drive
Suite 200
Cary, NC 27518
(919) 852-0468
(919) 852-0598 (Fax)
www.simpsonengr.com
LICENSURE NO. C-2521

NORTH CAROLINA PROFESSIONAL SEAL 023906 ENGINEER MARK A. AVERETTE
6-5-2013

REVISIONS						SHEET NO.
NO.	BY:	DATE:	NO.	BY:	DATE:	S-772
1			3			TOTAL SHEETS
2			4			836

DRAWN BY: R. SEALEY DATE: 4-13
CHECKED BY: M. AVERETTE DATE: 4-13
DESIGN ENGINEER OF RECORD: M. AVERETTE DATE: 4-13

6/5/2013 2:36:03 PM G:\Projects\2011\U-2524 (Guilford Co)\Structures\Ramp D\Drawings\Final\U-2524_sd_rpd_ts.dgn

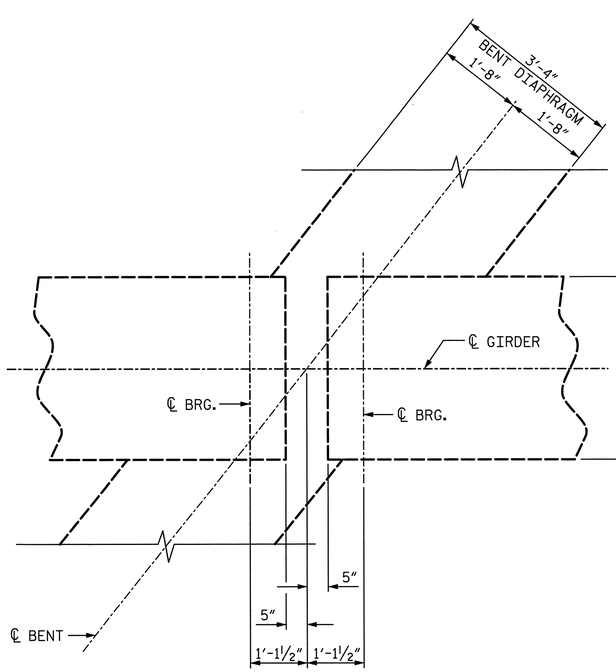

CONTINUOUS BENT DIAPHRAGM
@ BENTS 3, 5, & 6

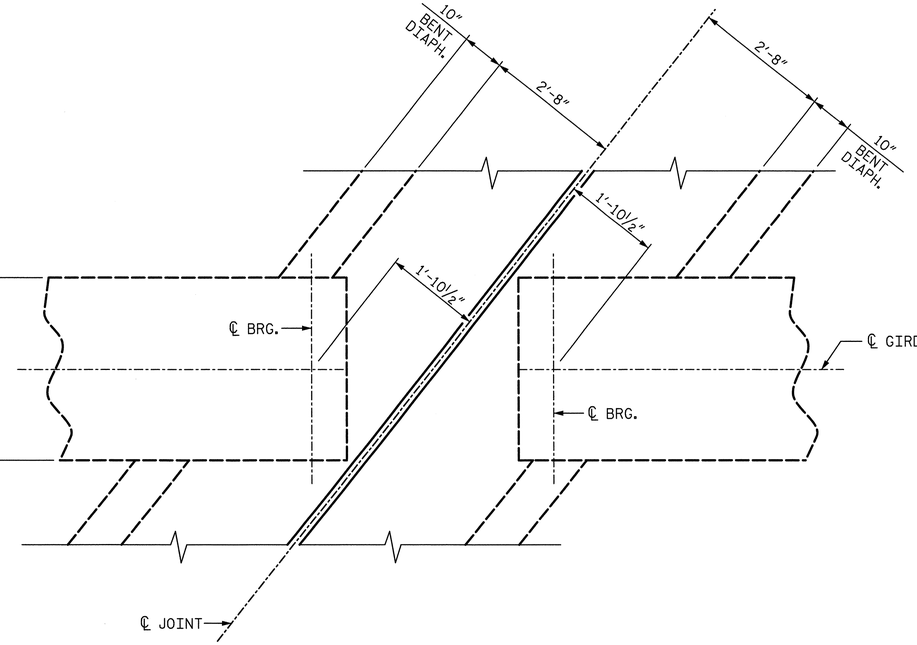

BENT DIAPHRAGM
@ BENT 4

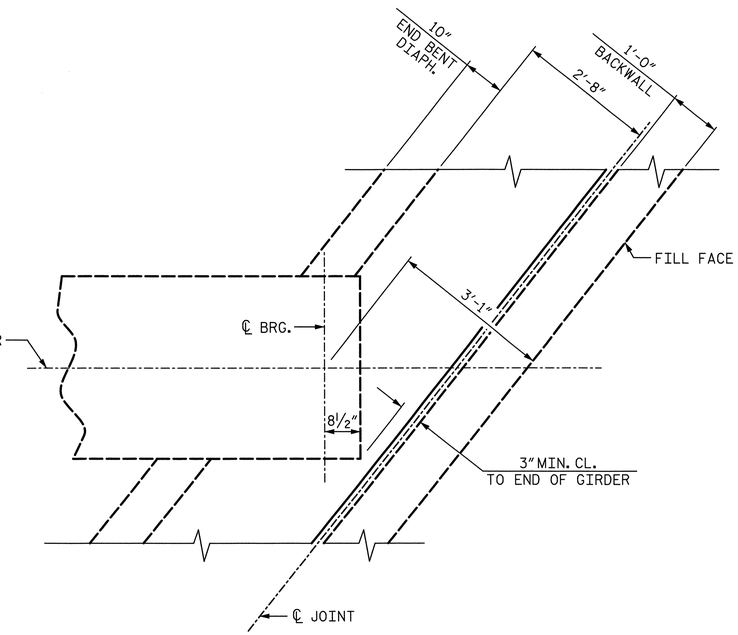

END BENT DIAPHRAGM
@ END BENT 2

PLAN OF DIAPHRAGMS

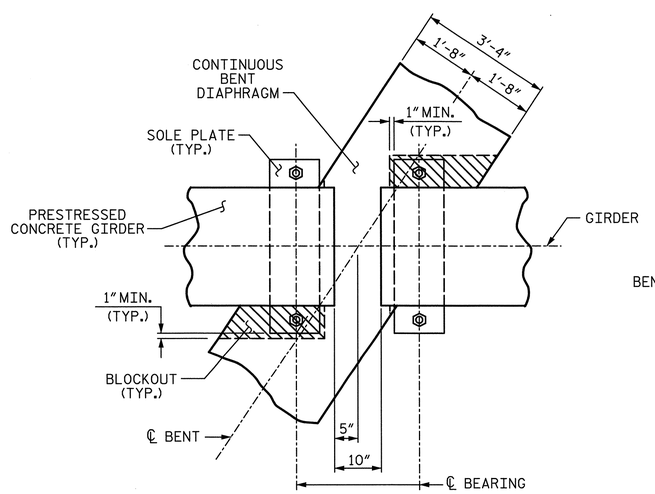

PLAN

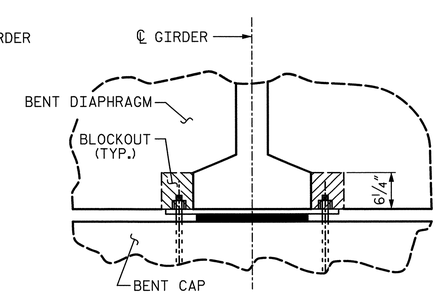

SECTION

CONTINUOUS BENT DIAPHRAGM BLOCK-OUT DETAIL

@ BENTS 3, 5, & 6

PROJECT NO. U-2524C
GUILFORD COUNTY
STATION: 9+75.28 -RPDY4-

SHEET 5 OF 5

STATE OF NORTH CAROLINA
DEPARTMENT OF TRANSPORTATION
RALEIGH

SUPERSTRUCTURE

DETAILS

-RAMP D-

PLANS PREPARED BY:
SIMPSON ENGINEERS & ASSOCIATES
5640 Dillard Drive
Suite 200
Cary, NC 27518
(919) 852-0468
(919) 852-0598 (Fax)
www.simpsonengr.com
LICENSURE NO. C-2521

NORTH CAROLINA PROFESSIONAL SEAL 023908 ENGINEER MARK A. AVERETTE
6-5-2013

REVISIONS						SHEET NO.
NO.	BY:	DATE:	NO.	BY:	DATE:	S-773
1			3			TOTAL SHEETS
2			4			836

DRAWN BY: R. SEALEY DATE: 4-13
CHECKED BY: M. AVERETTE DATE: 4-13
DESIGN ENGINEER OF RECORD: M. AVERETTE DATE: 4-13

6/5/2013 2:36:07 PM G:\Projects\2011\U-2524 (Guilford Co)\Structures\Ramp D\Drawings\Final\U-2524_sd_rpd_ts.dgn

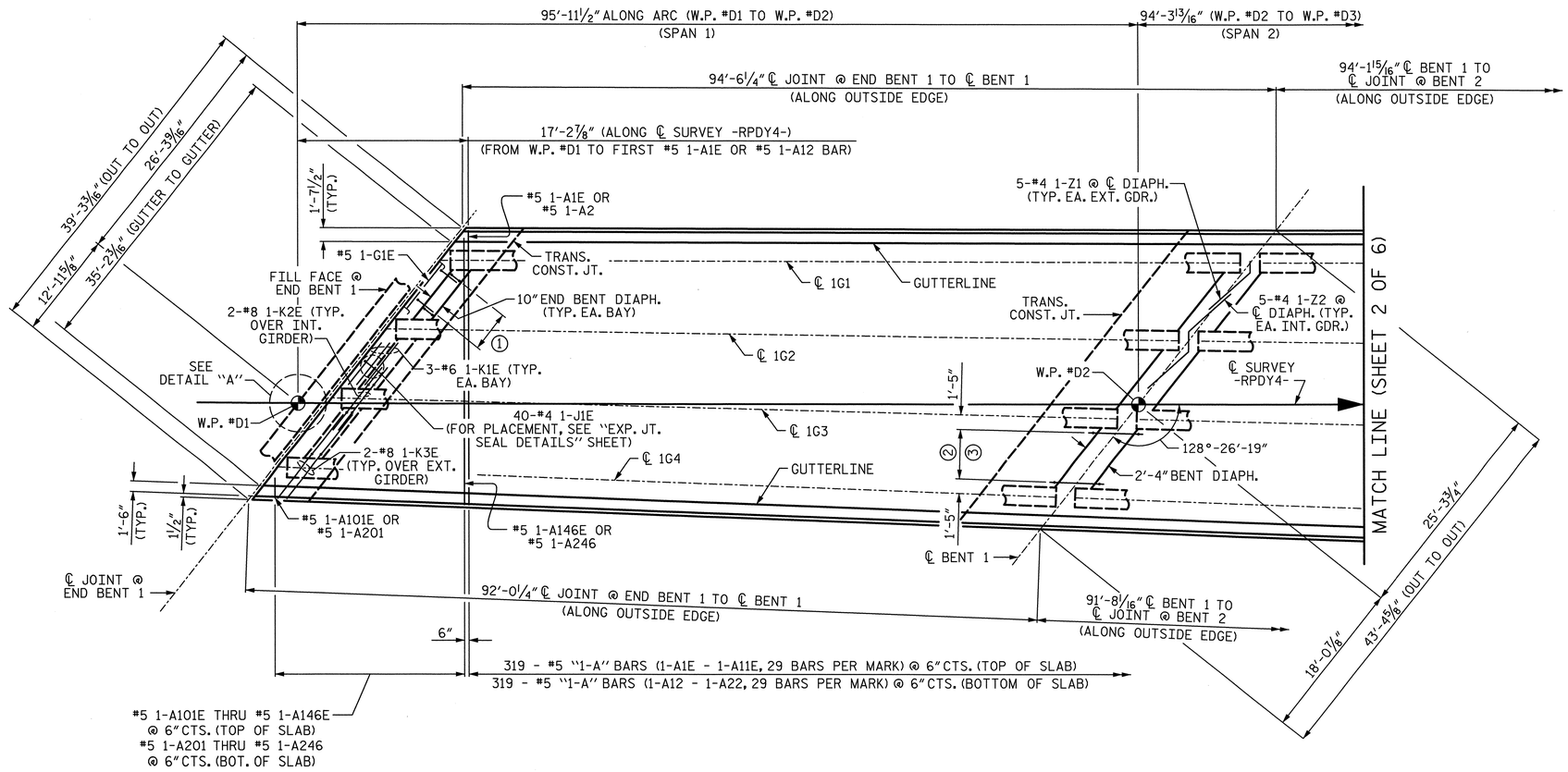

PLAN - 2 SPAN CONTINUOUS UNIT 1

NOTE: "B" BARS NOT SHOWN, SEE "B-BAR LAYOUT" SHEET 1 OF 3 FOR DETAILS

① 5-#4 1-S1E & #5 1-S2E @ EQ. SPA. (TYP. EA. BAY)
② 2-#4 1-U1 & 5-#4 1-U2 @ EQ. SPA. (TYP. EA. BAY)
③ #4 1-S3 (26 REQ'D.) (TYP. EA. BAY)

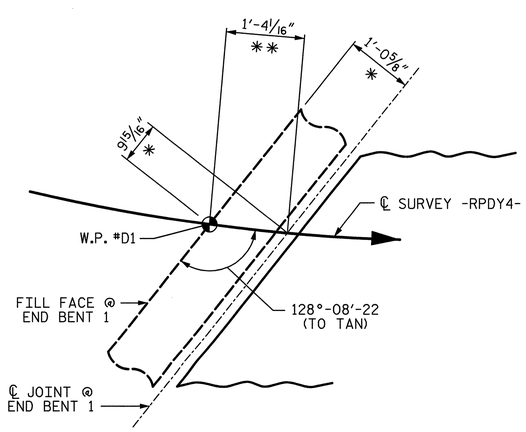

DETAIL "A"

* @ 60° F
** ARC DIMENSION

NOTES:

"A" BARS TO BE PLACED PERPENDICULAR TO ℄ SURVEY -RPDY4- AND THE EXTENDED TANGENT.

SEE "CONCRETE BARRIER RAIL" SHEETS FOR ADDITIONAL REINFORCING STEEL IN SLAB & BARRIER RAIL.

SEE "AASHTO TYPE IV PRESTRESSED CONCRETE GDR. CONT. FOR L.L., SHEET 2 OF 2 FOR LOCATION OF INTERMEDIATE DIAPHRAGMS IN SPANS 1 & 2.

SEE SUPERSTRUCTURE "DETAILS" SHEETS FOR SECTIONS THRU END BENT AND BENT DIAPHRAGMS.

SEE "POUR SEQUENCE DETAILS" SHEETS FOR LOCATIONS OF TRANSVERSE CONSTRUCTION JOINTS.

SEE "CLOSED DRAINAGE SYSTEM DETAILS" SHEETS FOR LOCATION OF 6"Ø PVC DECK DRAINS.

PROJECT NO. U-2524C
GUILFORD COUNTY
STATION: 9+75.28 -RPDY4-

SHEET 1 OF 6

STATE OF NORTH CAROLINA
DEPARTMENT OF TRANSPORTATION
RALEIGH
SUPERSTRUCTURE

PLAN OF SPANS
(2 SPAN CONTINUOUS UNIT 1)
(SPANS 1 & 2)

-RAMP D-

PLANS PREPARED BY:
SIMPSON ENGINEERS & ASSOCIATES
5640 Dillard Drive
Suite 200
Cary, NC 27518
(919) 852-0468
(919) 852-0598 (Fax)
www.simpsonengr.com
LICENSURE NO. C-2521

NORTH CAROLINA PROFESSIONAL SEAL 023908 ENGINEER MARK A. AVERETTE
6-5-2013

REVISIONS						SHEET NO.
NO.	BY:	DATE:	NO.	BY:	DATE:	S-774
1			3			TOTAL SHEETS
2			4			836

DRAWN BY: R. SEALEY DATE: 4-13
CHECKED BY: M. AVERETTE DATE: 4-13
DESIGN ENGINEER OF RECORD: M. AVERETTE DATE: 4-13

6/5/2013 2:36:12 PM G:\Projects\2011\U-2524 (Guilford Co)\Structures\Ramp D\Drawings\Final\U-2524_sd_rpd_ps.dgn

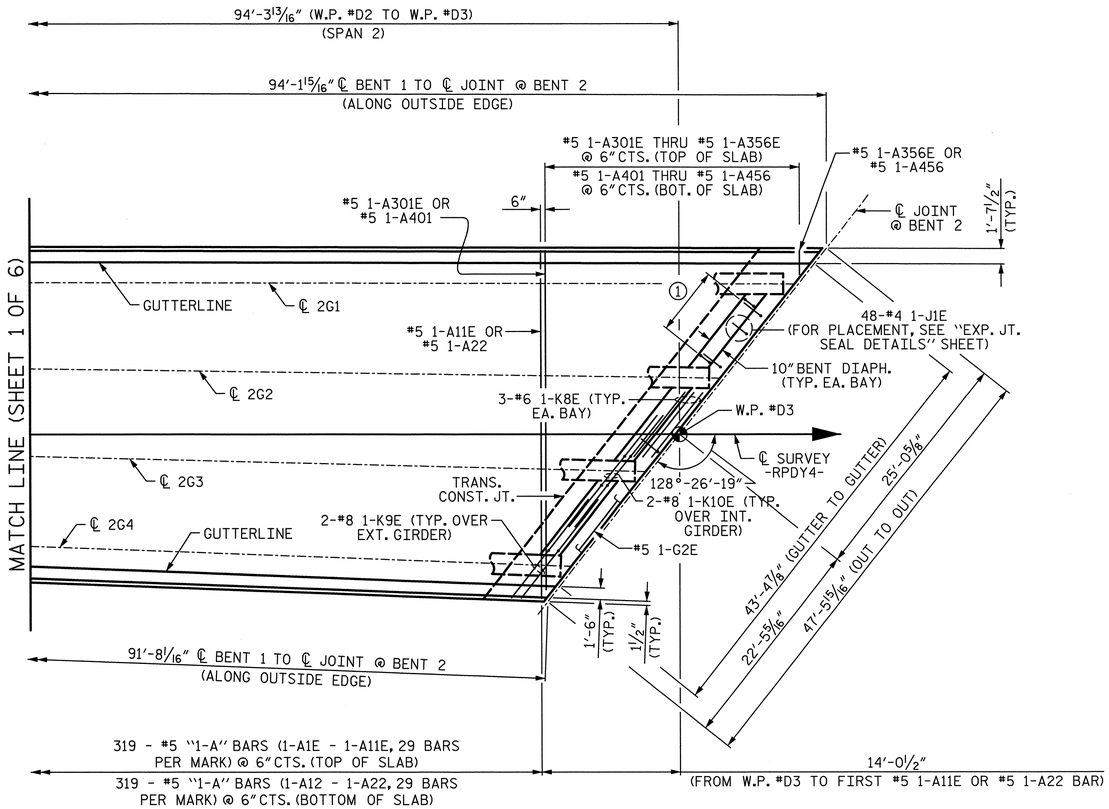

PLAN - 2 SPAN CONTINUOUS UNIT 1

NOTE: "B" BARS NOT SHOWN, SEE "B-BAR LAYOUT" SHEET 1 OF 3 FOR DETAILS

1 8-#4 1-S1E & #5 1-S2E @ EQ. SPA. (TYP. EA. BAY)

PROJECT NO. U-2524C

GUILFORD COUNTY

STATION: 9+75.28 -RPDY4-

SHEET 2 OF 6

STATE OF NORTH CAROLINA
DEPARTMENT OF TRANSPORTATION
RALEIGH

SUPERSTRUCTURE

PLAN OF SPANS
(2 SPAN CONTINUOUS UNIT 1)
(SPANS 1 & 2)

-RAMP D-

PLANS PREPARED BY:

SIMPSON ENGINEERS & ASSOCIATES
5640 Dillard Drive
Suite 200
Cary, NC 27518
(919) 852-0468
(919) 852-0598 (Fax)
www.simpsonengr.com
LICENSURE NO. C-2521

NORTH CAROLINA PROFESSIONAL SEAL 023908 ENGINEER MARK A. AVERETTE
6-5-2013

REVISIONS						SHEET NO.
NO.	BY:	DATE:	NO.	BY:	DATE:	S-775
1			3			TOTAL SHEETS
2			4			836

DRAWN BY: R. SEALEY DATE: 4-13
CHECKED BY: M. AVERETTE DATE: 4-13
DESIGN ENGINEER OF RECORD: M. AVERETTE DATE: 4-13

6/5/2013 2:36:16 PM G:\Projects\2011\U-2524 (Guilford Co)\Structures\Ramp D\Drawings\Final\U-2524_sd_rpd_ps.dgn

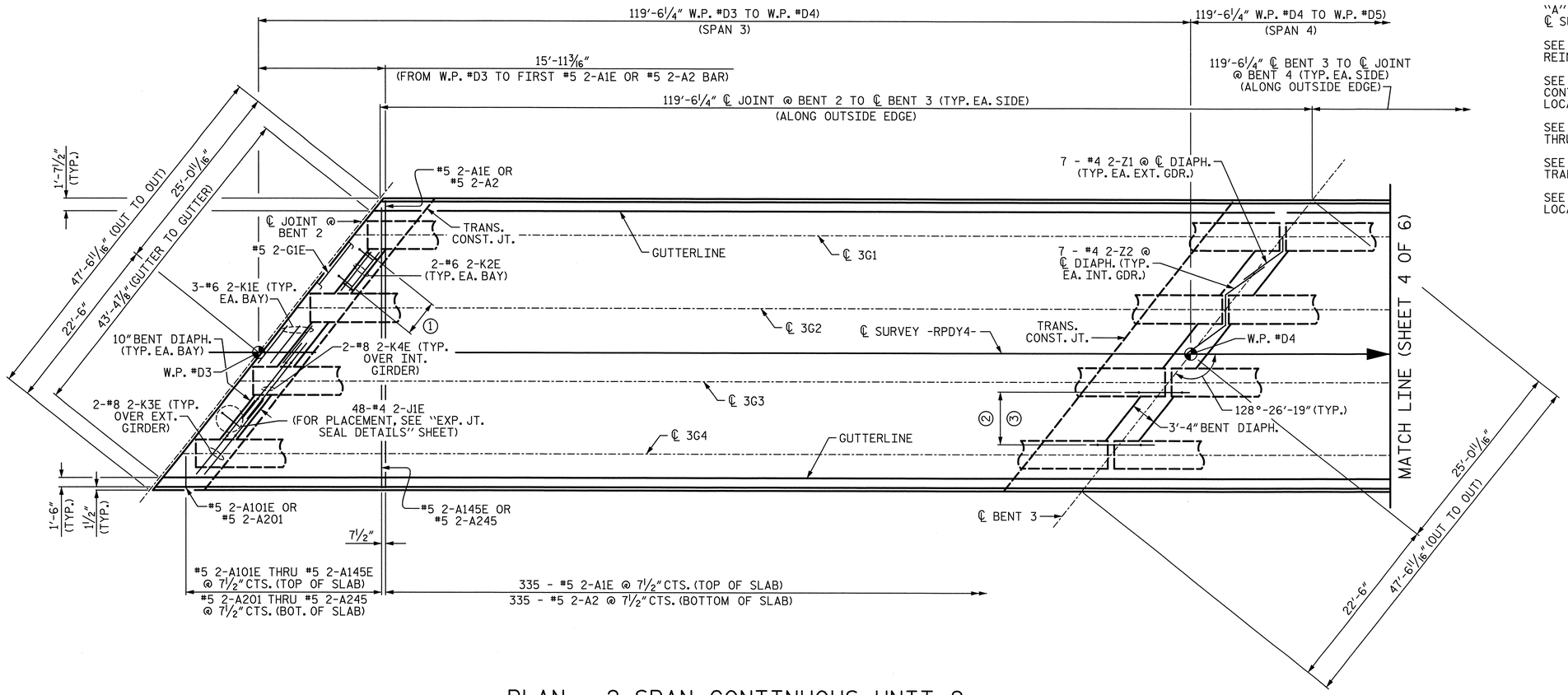

PLAN - 2 SPAN CONTINUOUS UNIT 2

NOTE: "B" BARS NOT SHOWN, SEE "B-BAR LAYOUT" SHEET 2 OF 3 FOR DETAILS

① 6-#4 2-S1E & #5 2-S2E @ 1'-0" CTS. (TYP. EA. BAY)
② 2-#4 2-U1 & 6-#4 2-U2 @ 1'-0" CTS. (TYP. EA. BAY)
③ #4 2-S3 (42 REQ'D.) (TYP. EA. BAY)

NOTES:

"A" BARS TO BE PLACED PERPENDICULAR TO ℄ SURVEY -RPDY4-.

SEE "CONCRETE BARRIER RAIL" SHEETS FOR ADDITIONAL REINFORCING STEEL IN SLAB & BARRIER RAIL.

SEE "72" PRESTRESSED CONCRETE MODIFIED BULB TEE CONTINUOUS FOR LIVE LOAD", SHEET 3 OF 3 FOR LOCATION OF INTERMEDIATE DIAPHRAGMS IN SPANS 3 & 4.

SEE SUPERSTRUCTURE "DETAILS" SHEETS FOR SECTIONS THRU BENT DIAPHRAGMS.

SEE "POUR SEQUENCE DETAILS" SHEETS FOR LOCATIONS OF TRANSVERSE CONSTRUCTION JOINTS.

SEE "CLOSED DRAINAGE SYSTEM DETAILS" SHEETS FOR LOCATION OF 6" PVC DECK DRAINS.

PROJECT NO. U-2524C
GUILFORD COUNTY
STATION: 9+75.28 -RPDY4-

SHEET 3 OF 6

STATE OF NORTH CAROLINA
DEPARTMENT OF TRANSPORTATION
RALEIGH

SUPERSTRUCTURE

PLAN OF SPANS
(2 SPAN CONTINUOUS UNIT 2)
(SPANS 3 & 4)

-RAMP D-

PLANS PREPARED BY:
SIMPSON ENGINEERS & ASSOCIATES
5640 Dillard Drive
Suite 200
Cary, NC 27518
(919) 852-0468
(919) 852-0598 (Fax)
www.simpsonengr.com
LICENSURE NO. C-2521

NORTH CAROLINA PROFESSIONAL ENGINEER SEAL 023906 MARK A. AVERETTE
6-5-2013

REVISIONS						SHEET NO.
NO.	BY:	DATE:	NO.	BY:	DATE:	S-776
1			3			TOTAL SHEETS
2			4			836

DRAWN BY: R. SEALEY DATE: 4-13
CHECKED BY: M. AVERETTE DATE: 4-13
DESIGN ENGINEER OF RECORD: M. AVERETTE DATE: 4-13

6/5/2013 2:36:21 PM G:\Projects\2011\U-2524 (Guilford Co)\Structures\Ramp D\Drawings\Final\U-2524_sd_rpd_ps.dgn

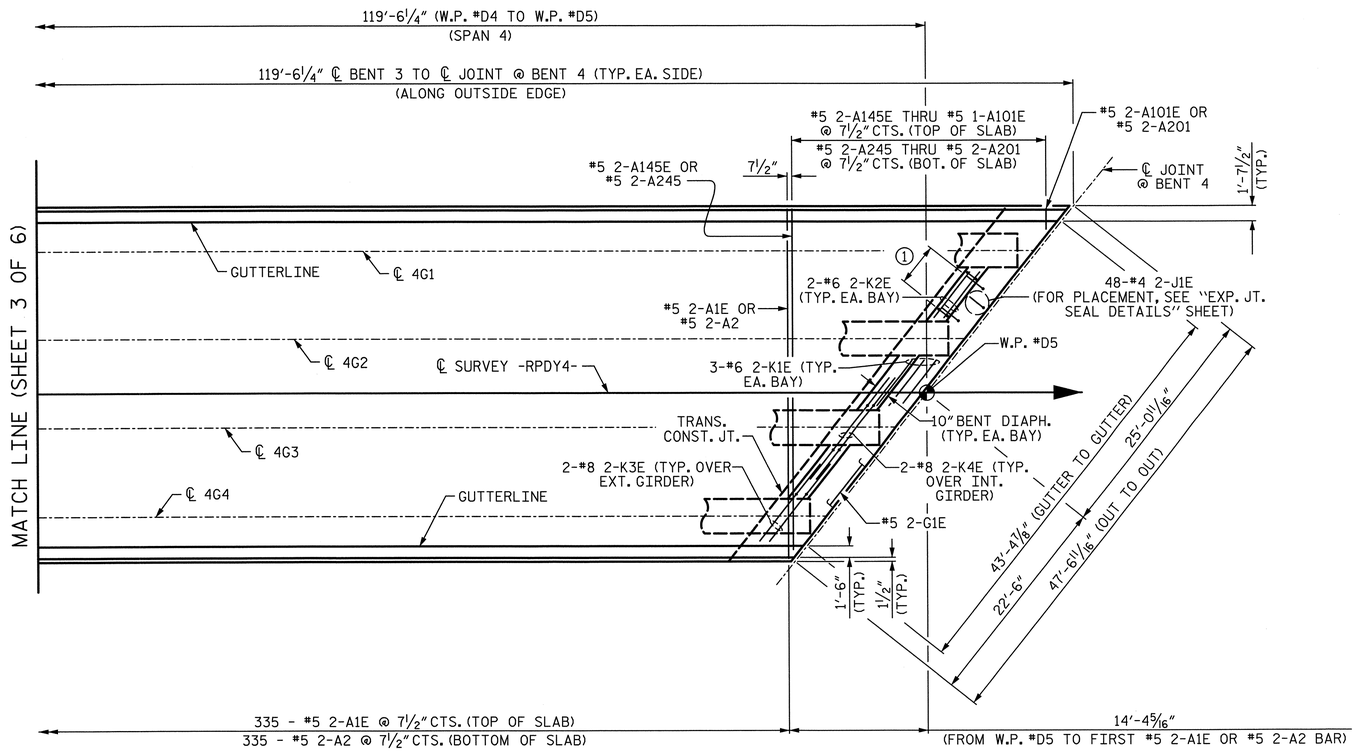

PLAN - 2 SPAN CONTINUOUS UNIT 2

NOTE: "B" BARS NOT SHOWN, SEE "B-BAR LAYOUT" SHEET 2 OF 3 FOR DETAILS

(1) 6-#4 2-S1E & #5 2-S2E @ 1'-0" CTS. (TYP. EA. BAY)

PROJECT NO. U-2524C

GUILFORD COUNTY

STATION: 9+75.28 -RPDY4-

SHEET 4 OF 6

STATE OF NORTH CAROLINA
DEPARTMENT OF TRANSPORTATION
RALEIGH

SUPERSTRUCTURE

PLAN OF SPAN
(2 SPAN CONTINUOUS UNIT 2)
(SPANS 3 & 4)

-RAMP D-

PLANS PREPARED BY:

SIMPSON ENGINEERS & ASSOCIATES
5640 Dillard Drive
Suite 200
Cary, NC 27518
(919) 852-0468
(919) 852-0598 (Fax)
www.simpsonengr.com
LICENSURE NO. C-2521

NORTH CAROLINA PROFESSIONAL SEAL 023906 ENGINEER MARK A. AVERETTE
6-5-2013

REVISIONS						SHEET NO.
NO.	BY:	DATE:	NO.	BY:	DATE:	S-777
1			3			TOTAL SHEETS
2			4			836

DRAWN BY: R. SEALEY DATE: 4-13
CHECKED BY: M. AVERETTE DATE: 4-13
DESIGN ENGINEER OF RECORD: M. AVERETTE DATE: 4-13

6/5/2013 2:36:25 PM G:\Projects\2011\U-2524 (Guilford Co)\Structures\Ramp D\Drawings\Final\U-2524_sd_rpd_ps.dgn

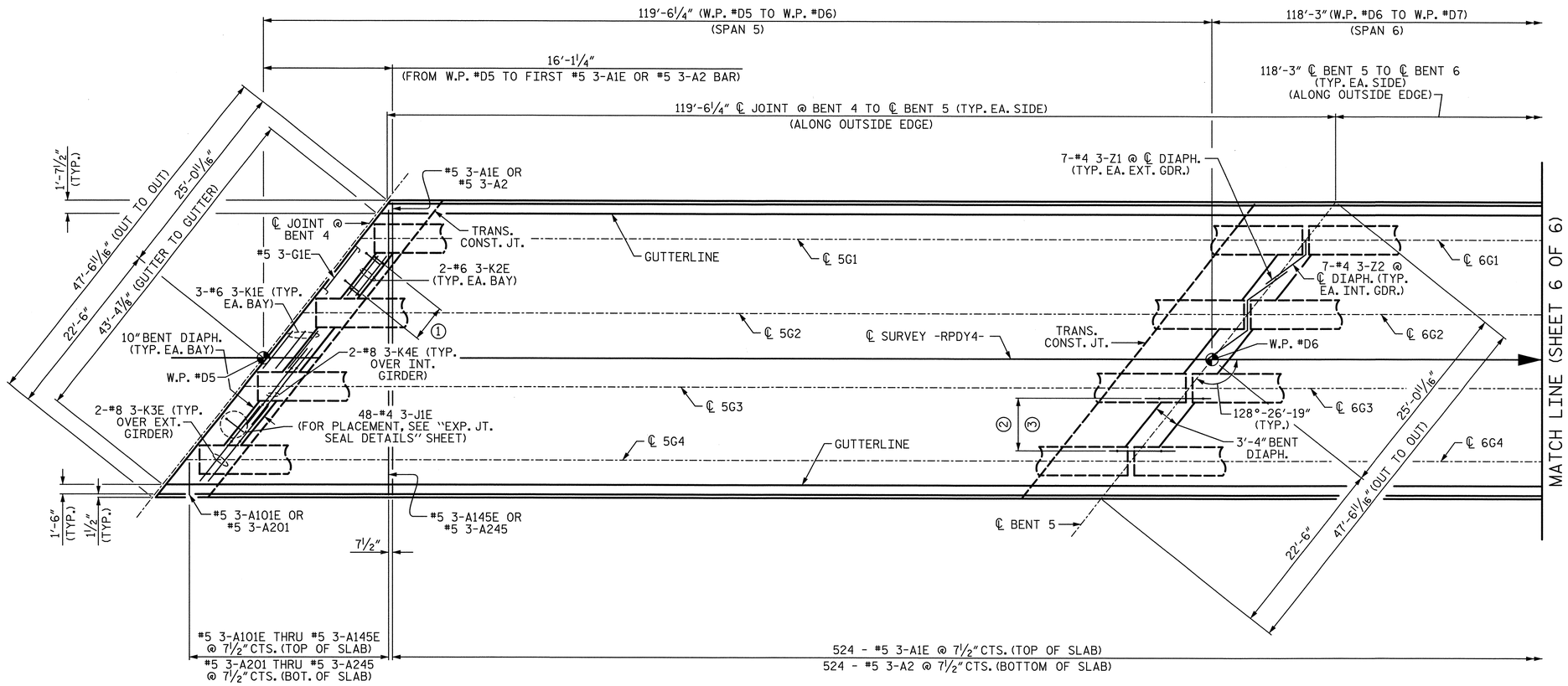

NOTES:

"A" BARS TO BE PLACED PERPENDICULAR TO ℄ SURVEY -RPDY4-.

SEE "CONCRETE BARRIER RAIL" SHEETS FOR ADDITIONAL REINFORCING STEEL IN SLAB & BARRIER RAIL.

SEE "72" PRESTRESSED CONCRETE MODIFIED BULB TEE CONTINUOUS FOR LIVE LOAD", SHEET 3 OF 3 FOR LOCATION OF INTERMEDIATE DIAPHRAGMS IN SPANS 5, 6, & 7.

SEE SUPERSTRUCTURE "DETAILS" SHEETS FOR SECTIONS THRU END BENT AND BENT DIAPHRAGMS.

SEE "POUR SEQUENCE DETAILS" SHEETS FOR LOCATIONS OF TRANSVERSE CONSTRUCTION JOINTS.

SEE "CLOSED DRAINAGE SYSTEM DETAILS" SHEETS FOR LOCATION OF 6"Ø PVC DECK DRAINS.

PLAN - 3 SPAN CONTINUOUS UNIT 3

NOTE: "B" BARS NOT SHOWN, SEE "B-BAR LAYOUT" SHEET 3 OF 3 FOR DETAILS

① 6-#4 3-S1E & #5 3-S2E @ 1'-0" CTS. (TYP. EA. BAY)
② 2-#4 3-U1 & 6-#4 3-U2 @ 1'-0" CTS. (TYP. EA. BAY)
③ #4 3-S3 (42 REQ'D.) (TYP. EA. BAY)

PROJECT NO. U-2524C
GUILFORD COUNTY
STATION: 9+75.28 -RPDY4-

SHEET 5 OF 6

STATE OF NORTH CAROLINA
DEPARTMENT OF TRANSPORTATION
RALEIGH

SUPERSTRUCTURE

PLAN OF SPANS
(3 SPAN CONTINUOUS UNIT 3)
(SPANS 5, 6, & 7)

-RAMP D-

PLANS PREPARED BY:
SIMPSON ENGINEERS & ASSOCIATES
5640 Dillard Drive
Suite 200
Cary, NC 27518
(919) 852-0468
(919) 852-0598 (Fax)
www.simpsonengr.com
LICENSURE NO. C-2521

NORTH CAROLINA PROFESSIONAL SEAL 023906 ENGINEER MARK A. AVERETTE
6-5-2013

REVISIONS						SHEET NO.
NO.	BY:	DATE:	NO.	BY:	DATE:	S-778
1			3			TOTAL SHEETS
2			4			836

DRAWN BY: R. SEALEY DATE: 4-13
CHECKED BY: M. AVERETTE DATE: 4-13
DESIGN ENGINEER OF RECORD: M. AVERETTE DATE: 4-13

6/5/2013 2:36:29 PM G:\Projects\2011\U-2524 (Guilford Co)\Structures\Ramp D\Drawings\Final\U-2524_sd_rpd_ps.dgn

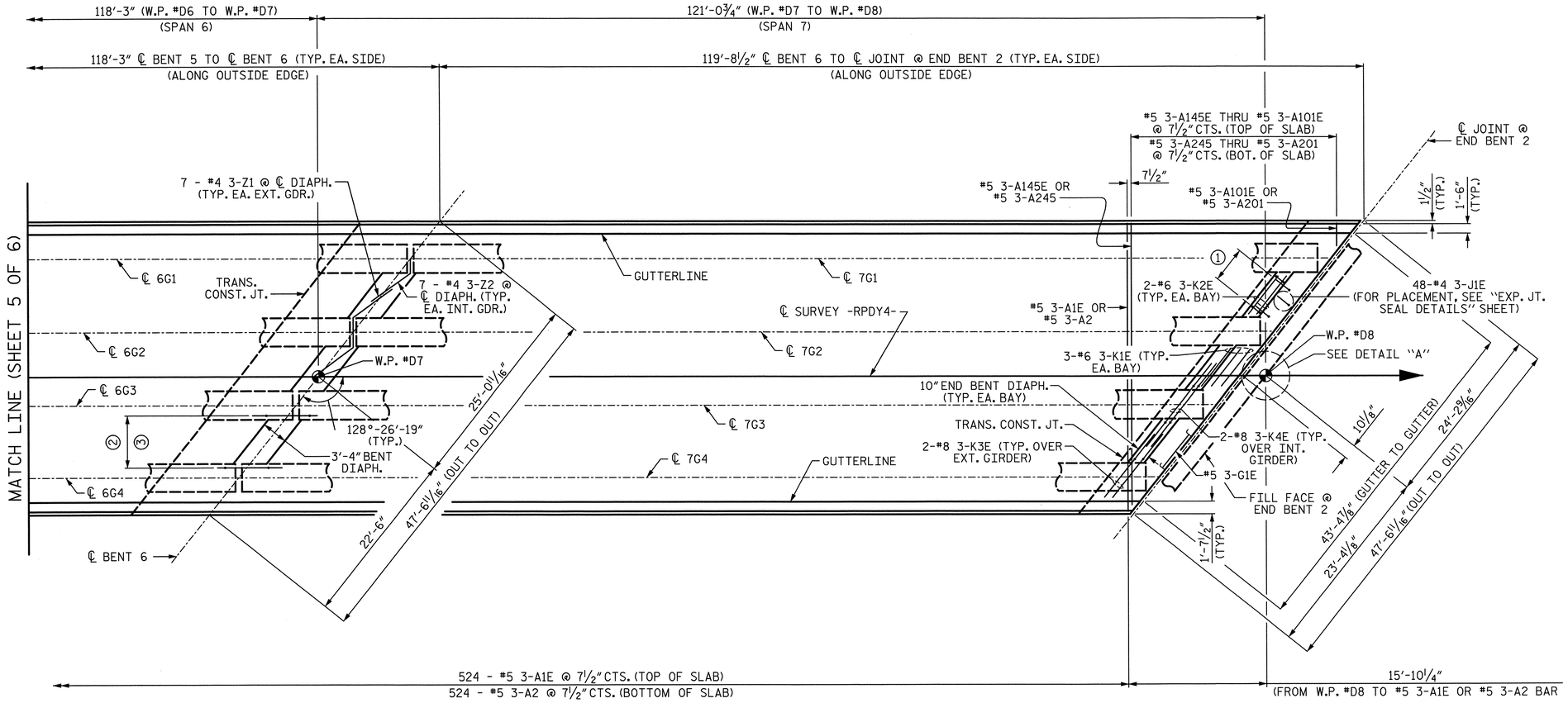

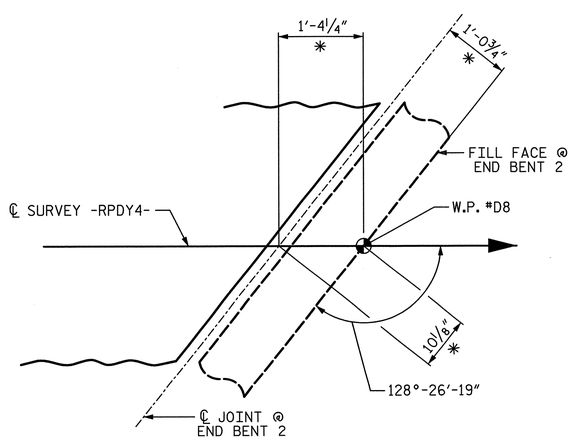

DETAIL "A"

* @ 60° F

PLAN - 3 SPAN CONTINUOUS UNIT 3

NOTE: "B" BARS NOT SHOWN, SEE "B-BAR LAYOUT" SHEET 3 OF 3 FOR DETAILS

1. 6-#4 3-S1E & #5 3-S2E @ 1'-0" CTS. (TYP. EA. BAY)
2. 2-#4 3-U1 & 6-#4 3-U2 @ 1'-0" CTS. (TYP. EA. BAY)
3. #4 3-S3 (42 REQ'D.) (TYP. EA. BAY)

PROJECT NO. U-2524C

GUILFORD COUNTY

STATION: 9+75.28 -RPDY4-

SHEET 6 OF 6

STATE OF NORTH CAROLINA
DEPARTMENT OF TRANSPORTATION
RALEIGH

SUPERSTRUCTURE

PLAN OF SPANS
(3 SPAN CONTINUOUS UNIT 3)
(SPANS 5, 6, & 7)

-RAMP D-

PLANS PREPARED BY:

SIMPSON ENGINEERS & ASSOCIATES
5640 Dillard Drive
Suite 200
Cary, NC 27518
(919) 852-0468
(919) 852-0598 (Fax)
www.simpsonengr.com
LICENSURE NO. C-2521

NORTH CAROLINA PROFESSIONAL SEAL 023906 ENGINEER MARK A. AVERETTE
6-5-2013

REVISIONS						
NO.	BY:	DATE:	NO.	BY:	DATE:	
1			3			
2			4			

SHEET NO. S-779

TOTAL SHEETS 836

DRAWN BY: R. SEALEY DATE: 4-13
CHECKED BY: M. AVERETTE DATE: 4-13
DESIGN ENGINEER OF RECORD: M. AVERETTE DATE: 4-13

6/5/2013 2:36:34 PM G:\Projects\2011\U-2524 (Guilford Co)\Structures\Ramp D\Drawings\Final\U-2524_sd_rpd_ps.dgn

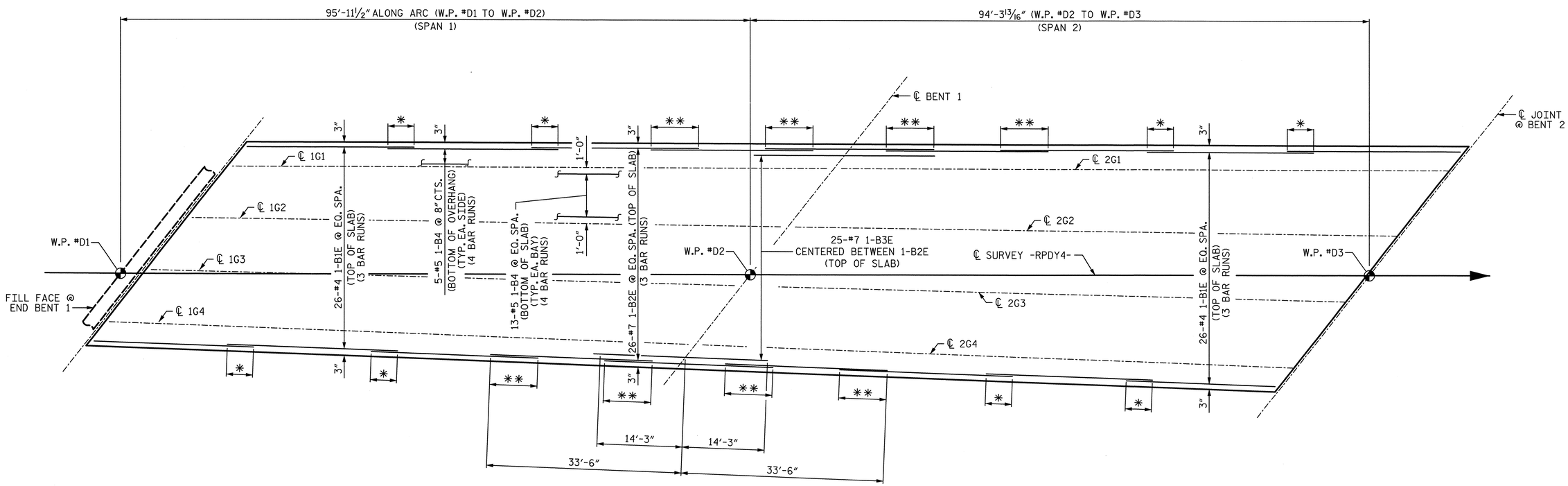

B-BAR LAYOUT - 2 SPAN CONTINUOUS UNIT 1

* = 2'-0" MIN. SPLICE
** = 5'-3" MIN. SPLICE

PROJECT NO. U-2524C
GUILFORD COUNTY
STATION: 9+75.28 -RPDY4-

SHEET 1 OF 3

STATE OF NORTH CAROLINA
DEPARTMENT OF TRANSPORTATION
RALEIGH
SUPERSTRUCTURE

B-BAR LAYOUT
(2 SPAN CONTINUOUS UNIT 1)
(SPANS 1 & 2)

-RAMP D-

PLANS PREPARED BY:
SIMPSON ENGINEERS & ASSOCIATES
5640 Dillard Drive
Suite 200
Cary, NC 27518
(919) 852-0468
(919) 852-0598 (Fax)
www.simpsonengr.com
LICENSURE NO. C-2521

NORTH CAROLINA PROFESSIONAL SEAL 023906 ENGINEER MARK A. AVERETTE
6-5-2013

REVISIONS						SHEET NO.
NO.	BY:	DATE:	NO.	BY:	DATE:	S-780
1			3			TOTAL SHEETS
2			4			836

DRAWN BY: R. SEALEY DATE: 4-13
CHECKED BY: M. AVERETTE DATE: 4-13
DESIGN ENGINEER OF RECORD: M. AVERETTE DATE: 4-13

6/5/2013 2:36:38 PM G:\Projects\2011\U-2524 (Guilford Co)\Structures\Ramp D\Drawings\Final\U-2524_sd_rpd_ps.dgn

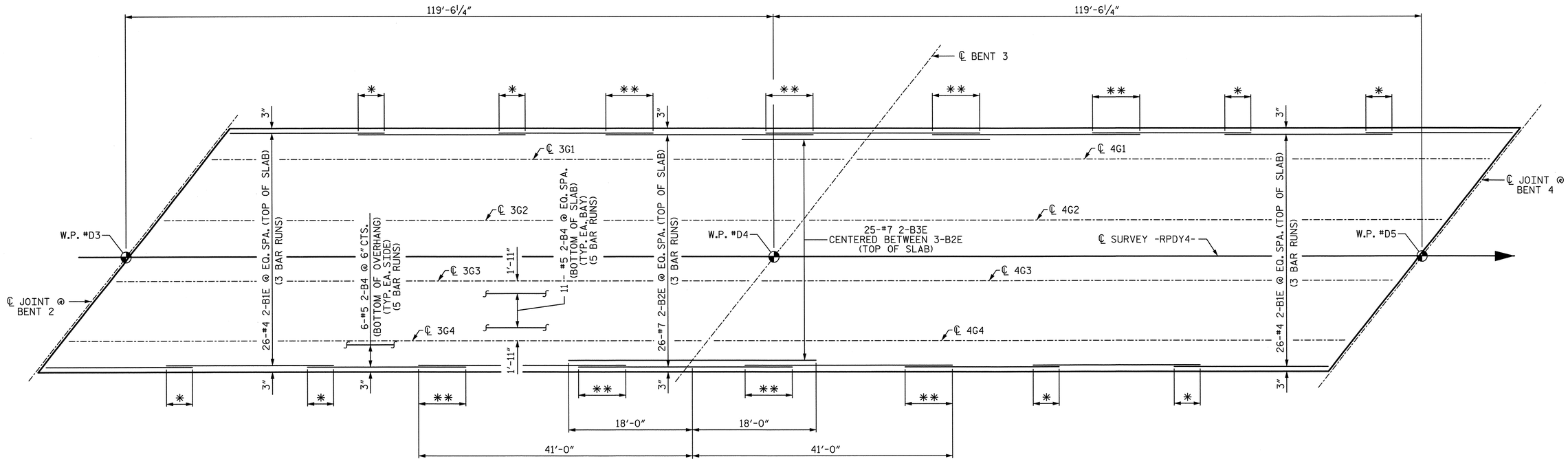

B-BAR LAYOUT - 2 SPAN CONTINUOUS UNIT 2

✱ = 2'-0" MIN. SPLICE
✱✱ = 5'-3" MIN. SPLICE

PROJECT NO. U-2524C
GUILFORD COUNTY
STATION: 9+75.28 -RPDY4-

SHEET 2 OF 3

STATE OF NORTH CAROLINA
DEPARTMENT OF TRANSPORTATION
RALEIGH
SUPERSTRUCTURE

B-BAR LAYOUT
(2 SPAN CONTINUOUS UNIT 2)
(SPANS 3 & 4)

-RAMP D-

REVISIONS						SHEET NO.
NO.	BY:	DATE:	NO.	BY:	DATE:	S-781
1			3			TOTAL SHEETS
2			4			836

PLANS PREPARED BY:
SIMPSON ENGINEERS & ASSOCIATES
5640 Dillard Drive
Suite 200
Cary, NC 27518
(919) 852-0468
(919) 852-0598 (Fax)
www.simpsonengr.com
LICENSURE NO. C-2521

NORTH CAROLINA PROFESSIONAL ENGINEER SEAL 023908 MARK A. AVERETTE
6-5-2013

DRAWN BY: R. SEALEY DATE: 4-13
CHECKED BY: M. AVERETTE DATE: 4-13
DESIGN ENGINEER OF RECORD: M. AVERETTE DATE: 4-13

6/5/2013 2:36:42 PM G:\Projects\2011\U-2524 (Guilford Co)\Structures\Ramp D\Drawings\Final\U-2524_sd_rpd_ps.dgn

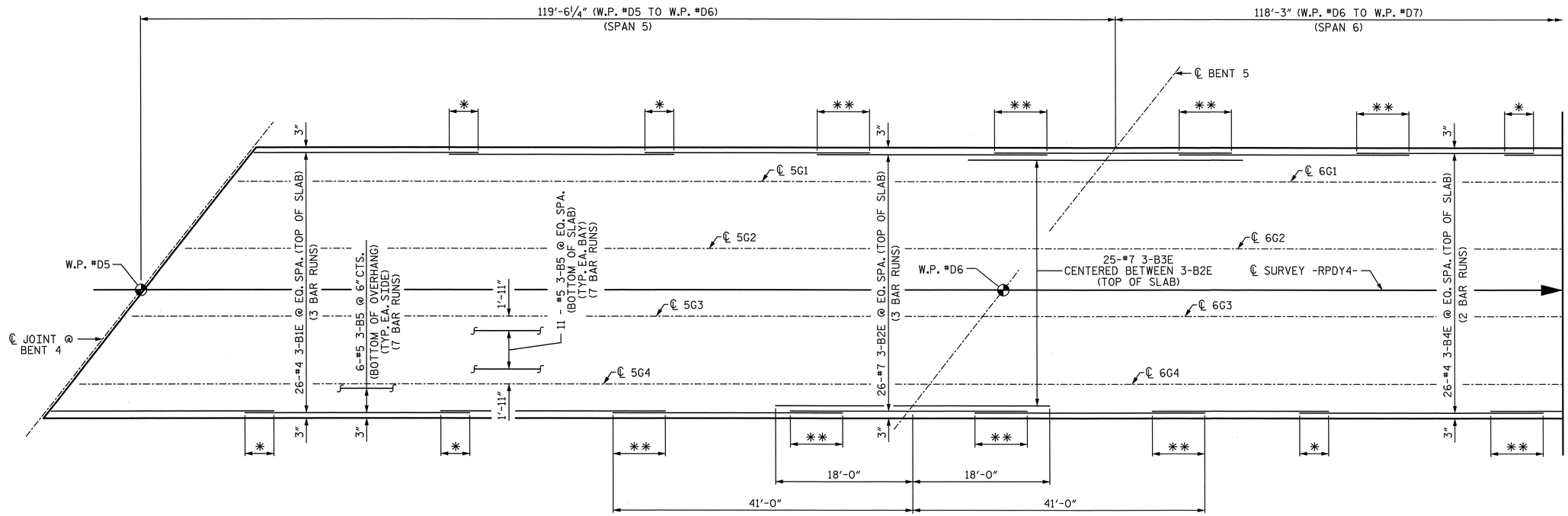

B-BAR LAYOUT - 3 SPAN CONTINUOUS UNIT 3

HALF UNIT SHOWN, OTHER HALF SIMILIAR BY ROTATION

* = 2'-0" MIN. SPLICE
** = 5'-3" MIN. SPLICE

PROJECT NO. U-2524C

GUILFORD COUNTY

STATION: 9+75.28 -RPDY4-

SHEET 3 OF 3

STATE OF NORTH CAROLINA
DEPARTMENT OF TRANSPORTATION
RALEIGH

SUPERSTRUCTURE

B-BAR LAYOUT
(3 SPAN CONTINUOUS UNIT 3)
(SPANS 5, 6, & 7)

-RAMP D-

PLANS PREPARED BY:

SIMPSON ENGINEERS & ASSOCIATES
5640 Dillard Drive
Suite 200
Cary, NC 27518
(919) 852-0468
(919) 852-0598 (Fax)
www.simpsonengr.com
LICENSURE NO. C-2521

NORTH CAROLINA PROFESSIONAL SEAL 023906 ENGINEER MARK A. AVERETTE
6-5-2013

REVISIONS						SHEET NO.
NO.	BY:	DATE:	NO.	BY:	DATE:	S-782
1			3			TOTAL SHEETS
2			4			836

DRAWN BY: R. SEALEY DATE: 4-13
CHECKED BY: M. AVERETTE DATE: 4-13
DESIGN ENGINEER OF RECORD: M. AVERETTE DATE: 4-13

6/5/2013 2:36:47 PM G:\Projects\2011\U-2524 (Guilford Co)\Structures\Ramp D\Drawings\Final\U-2524_sd_rpd_ps.dgn

NOTES:

1. FOR COLLECTOR PIPE SUPPORTS, SEE SHEET 3 OF 5.
2. FOR ADDITIONAL NOTES, SEE SHEET 5 OF 5.

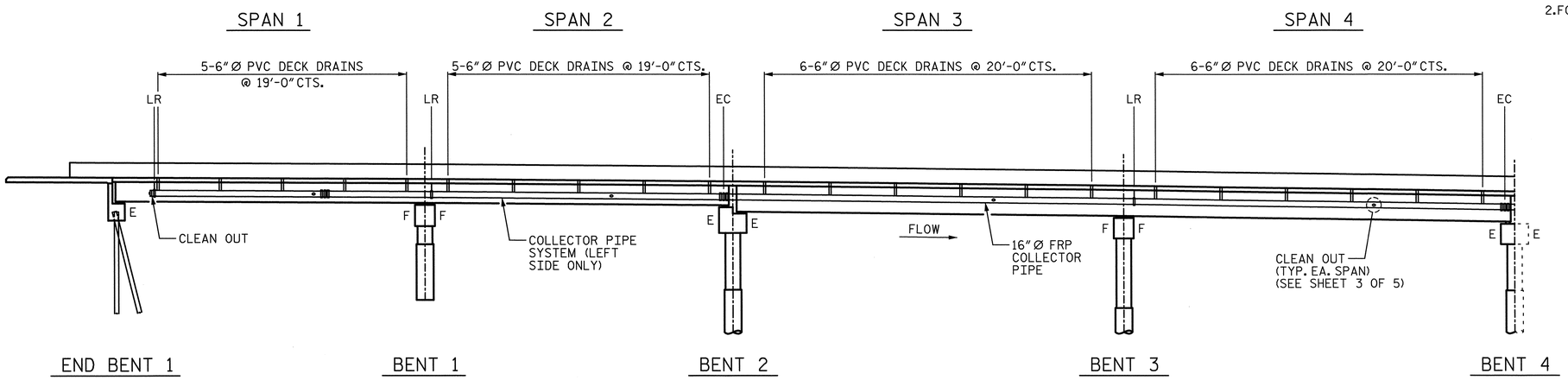

ELEVATION

EC = EXPANSION COUPLER (SEE SHEET 3 OF 5 FOR DETAILS)
LR = LONGITUDINAL RESTRAINT (SEE SHEET 3 OF 5 FOR DETAILS)

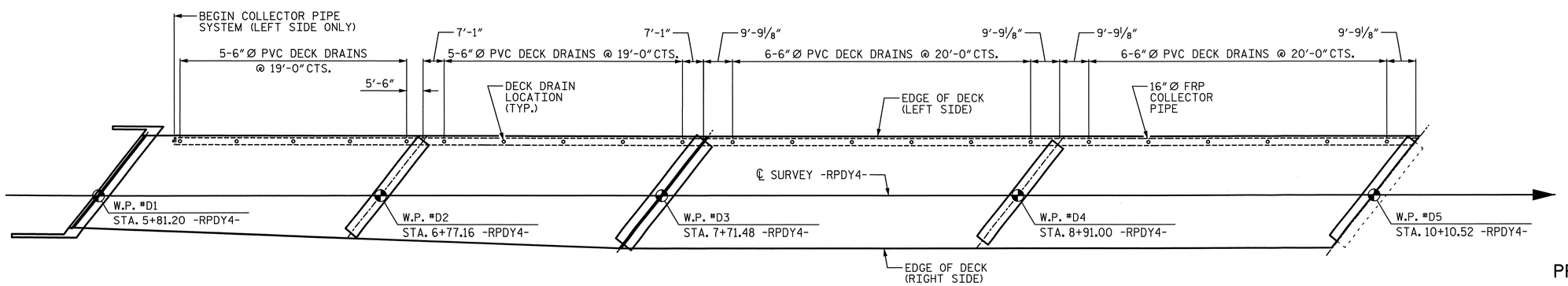

PLAN

(GIRDERS NOT SHOWN FOR CLARITY)
(DIMENSIONS ARE MEASURED @ CENTERLINE OF 6"Ø DECK DRAINS FROM ℄ BENT TO ℄ BENT OR ℄ JOINT)

PROJECT NO. U-2524C
GUILFORD COUNTY
STATION: 9+75.28 -RPDY4-

SHEET 1 OF 5

STATE OF NORTH CAROLINA
DEPARTMENT OF TRANSPORTATION
RALEIGH
SUPERSTRUCTURE

STRUCTURE DRAINAGE SYSTEM DETAILS

-RAMP D-

PLANS PREPARED BY:
SIMPSON ENGINEERS & ASSOCIATES
5640 Dillard Drive
Suite 200
Cary, NC 27518
(919) 852-0468
(919) 852-0598 (Fax)
www.simpsonengr.com
LICENSURE NO. C-2521

NORTH CAROLINA PROFESSIONAL SEAL 023908 ENGINEER MARK A. AVERETTE
6-5-2013

REVISIONS								SHEET NO.
NO.	BY:	DATE:	NO.	BY:	DATE:			S-783
1			3					TOTAL SHEETS
2			4					836

DRAWN BY: T. BANKOVICH DATE: 4-13
CHECKED BY: M. AVERETTE DATE: 4-13
DESIGN ENGINEER OF RECORD: M. AVERETTE DATE: 4-13

6/5/2013 2:36:52 PM G:\Projects\2011\U-2524 (Guilford Co)\Structures\Ramp D\Drawings\Final\U-2524_sd_rpd_cds.dgn

NOTES:

1. FOR COLLECTOR PIPE SUPPORTS, SEE SHEET 3 OF 5.
2. FOR ADDITIONAL NOTES, SEE SHEET 5 OF 5.

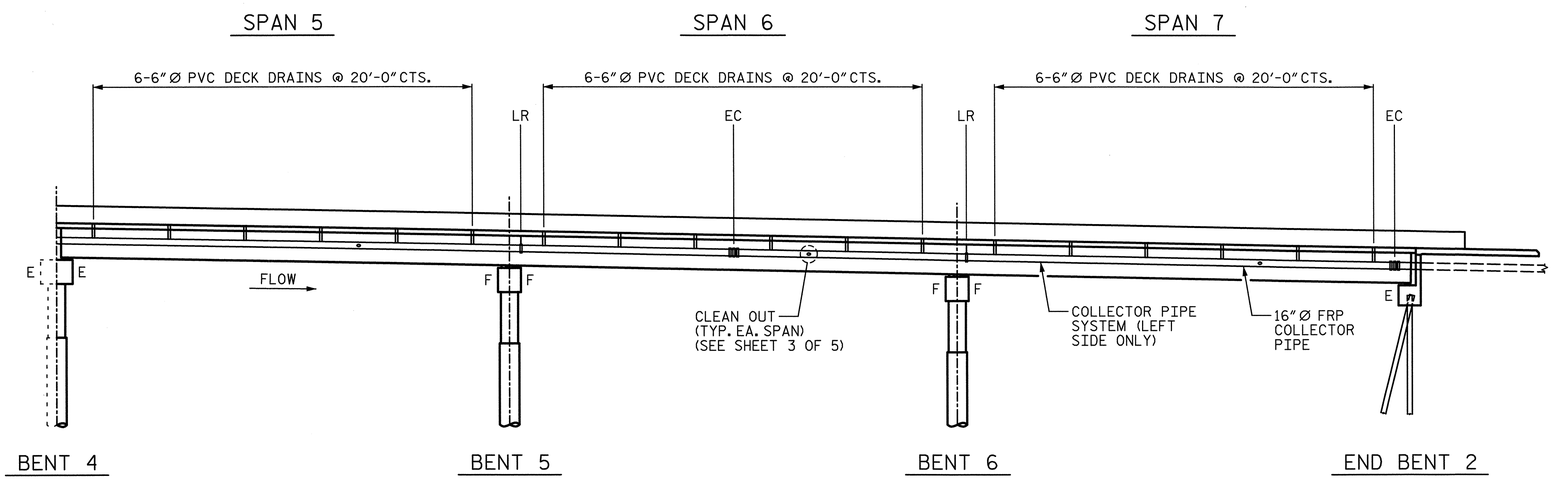

ELEVATION

EC = EXPANSION COUPLER (SEE SHEET 3 OF 5 FOR DETAILS)
LR = LONGITUDINAL RESTRAINT (SEE SHEET 3 OF 5 FOR DETAILS)

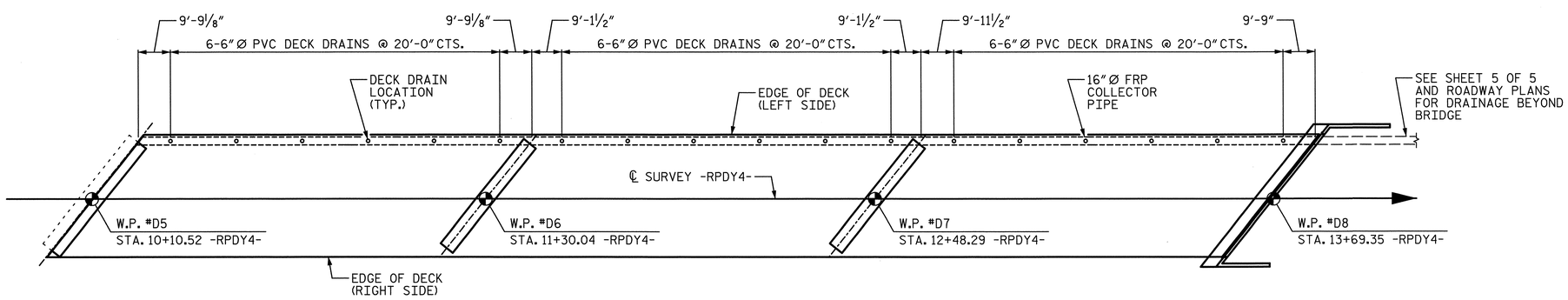

PLAN

(GIRDERS NOT SHOWN FOR CLARITY)
(DIMENSIONS ARE MEASURED @ CENTERLINE OF 6"Ø DECK DRAINS FROM ℄ BENT TO ℄ BENT OR ℄ JOINT)

PROJECT NO. U-2524C
GUILFORD COUNTY
STATION: 9+75.28 -RPDY4-

SHEET 2 OF 5

STATE OF NORTH CAROLINA
DEPARTMENT OF TRANSPORTATION
RALEIGH

SUPERSTRUCTURE

STRUCTURE DRAINAGE SYSTEM DETAILS

-RAMP D-

PLANS PREPARED BY:

SIMPSON ENGINEERS & ASSOCIATES
5640 Dillard Drive
Suite 200
Cary, NC 27518
(919) 852-0468
(919) 852-0598 (Fax)
www.simpsonengr.com
LICENSURE NO. C-2521

NORTH CAROLINA PROFESSIONAL SEAL 023908 ENGINEER MARK A. AVERETTE
6-5-2013

REVISIONS							
NO.	BY:	DATE:	NO.	BY:	DATE:	SHEET NO. S-784	
1			3			TOTAL SHEETS 836	
2			4				

DRAWN BY: T. BANKOVICH DATE: 4-13
CHECKED BY: M. AVERETTE DATE: 4-13
DESIGN ENGINEER OF RECORD: M. AVERETTE DATE: 4-13

6/5/2013 2:36:56 PM G:\Projects\2011\U-2524 (Guilford Co)\Structures\Ramp D\Drawings\Final\U-2524_sd_rpd_cds.dgn

NOTES:

1. FOR ADDITIONAL NOTES, SEE SHEET 5 OF 5.
2. FOR ADDITIONAL COLLECTOR PIPE SUPPORT DETAILS, SEE SHEET 4 OF 5.
3. CONTRACTOR SHALL ENSURE PIPE WALL BUILDUP IS SUFFICIENT TO ENGAGE PIPE RESTRAINT CLAMP AT LONGITUDINAL RESTRAINT LOCATIONS.

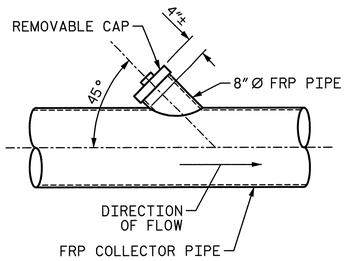

CLEANOUT DETAIL

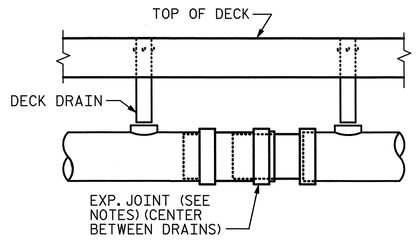

EXPANSION COUPLER

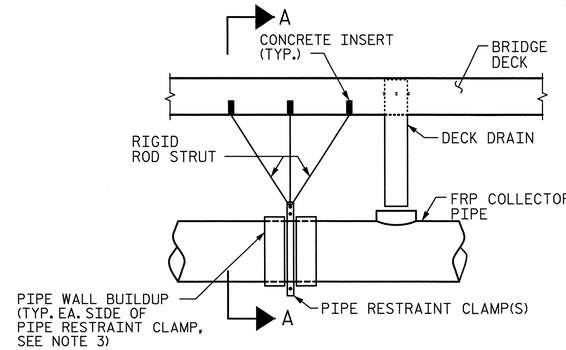

ELEVATION VIEW

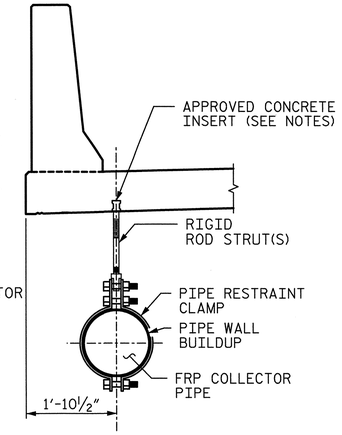

SECTION A-A

LONGITUDINAL RESTRAINT DETAIL

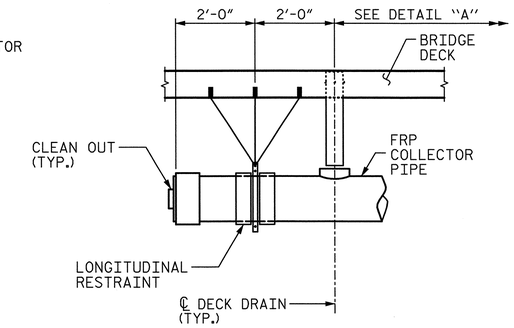

AT START OF SYSTEM

SYSTEM END DETAIL

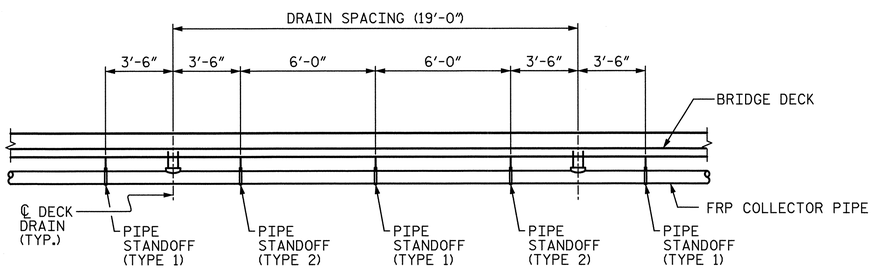

DETAIL "A"
(BETWEEN DECK DRAINS SPANS 1-2)

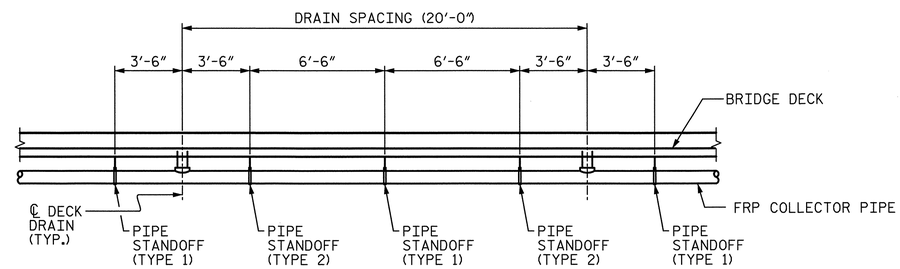

DETAIL "B"
(BETWEEN DECK DRAINS SPANS 3-7)

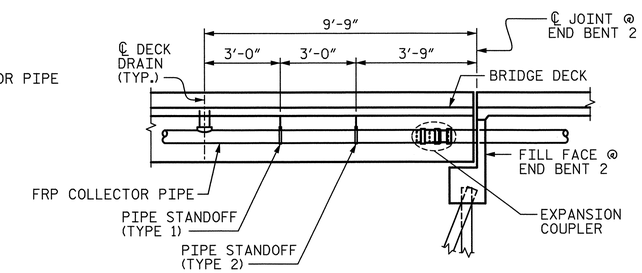

DETAIL "E"
(AT END BENT 2)

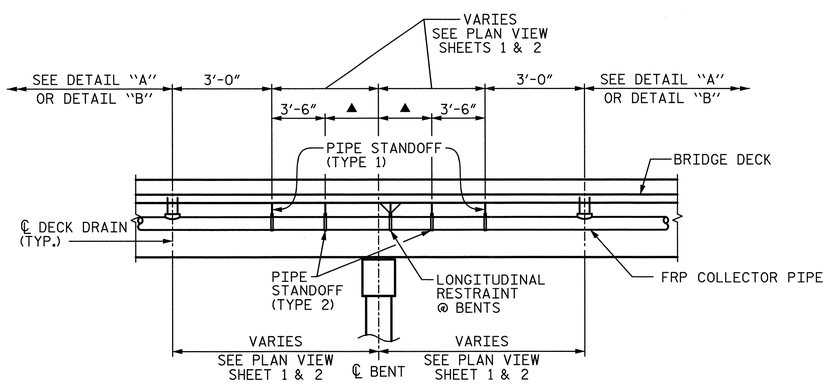

DETAIL "C"
(AT FIXED INTERIOR BENTS 1, 3, 5, AND 6)

▲ IF THIS DIMENSION IS LESS THAN 2'-0" THEN PIPE STANDOFF (TYPE 2) MAY BE ELIMINATED

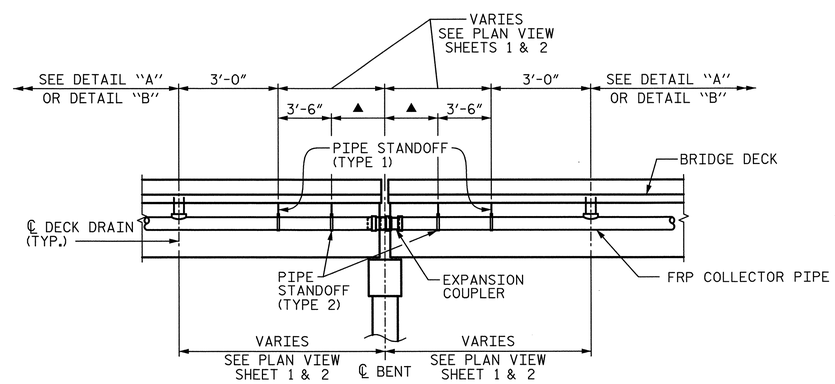

DETAIL "D"
(AT EXPANSION INTERIOR BENTS 2 AND 4)

▲ IF THIS DIMENSION IS LESS THAN 2'-0" THEN PIPE STANDOFF (TYPE 2) MAY BE ELIMINATED

COLLECTOR SUPPORT DETAILS

PROJECT NO. U-2524C
GUILFORD COUNTY
STATION: 9+75.28 -RPDY4-

SHEET 3 OF 5

STATE OF NORTH CAROLINA
DEPARTMENT OF TRANSPORTATION
RALEIGH
SUPERSTRUCTURE

STRUCTURE DRAINAGE SYSTEM DETAILS

-RAMP D-

PLANS PREPARED BY:
SIMPSON ENGINEERS & ASSOCIATES
5640 Dillard Drive
Suite 200
Cary, NC 27518
(919) 852-0468
(919) 852-0598 (Fax)
www.simpsonengr.com
LICENSURE NO. C-2521

NORTH CAROLINA PROFESSIONAL SEAL 023908 ENGINEER MARK A. AVERETTE
6-5-2013

REVISIONS						SHEET NO.
NO.	BY:	DATE:	NO.	BY:	DATE:	S-785
1			3			TOTAL SHEETS
2			4			836

DRAWN BY: T. BANKOVICH DATE: 4-13
CHECKED BY: M. AVERETTE DATE: 4-13
DESIGN ENGINEER OF RECORD: M. AVERETTE DATE: 4-13

6/5/2013 2:37:01 PM G:\Projects\2011\U-2524 (Guilford Co)\Structures\Ramp D\Drawings\Final\U-2524_sd_rpd_cds.dgn

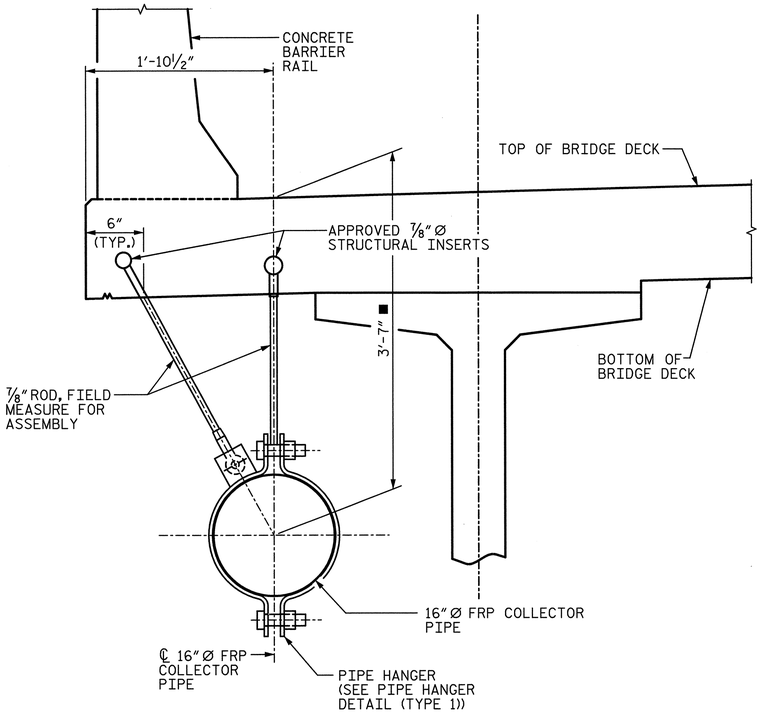

PIPE STANDOFF (TYPE 1)

ALL COMPONENTS SHALL BE GALVANIZED AFTER FABRICATION.

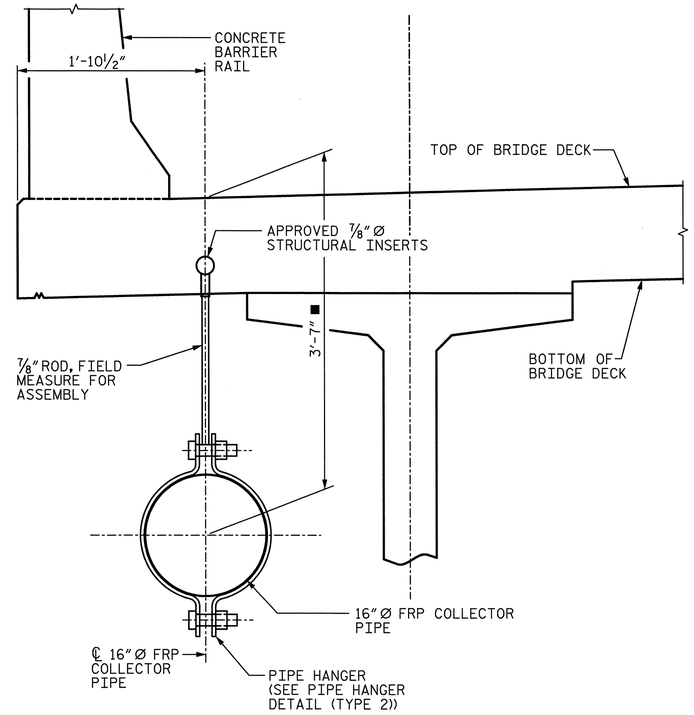

PIPE STANDOFF (TYPE 2)

ALL COMPONENTS SHALL BE GALVANIZED AFTER FABRICATION.

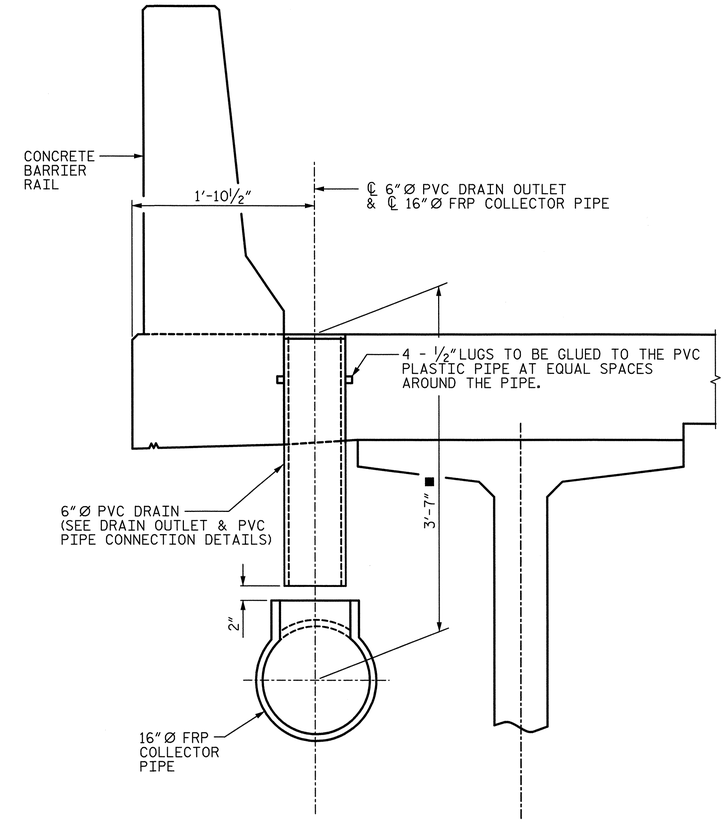

OVERHANG DRAINAGE DETAIL

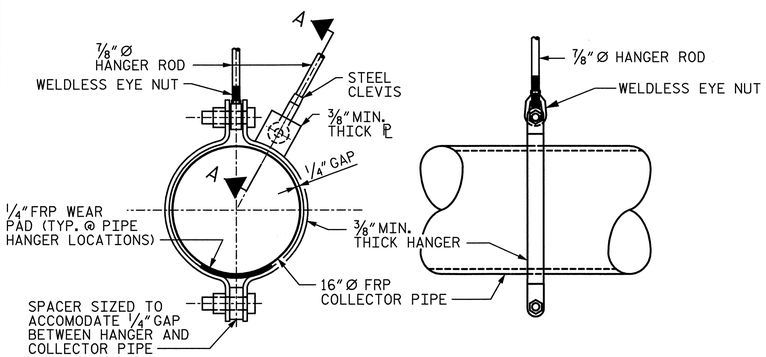

PIPE HANGER DETAIL (TYPE 1)

ALL COMPONENTS SHALL BE GALVANIZED AFTER FABRICATION.

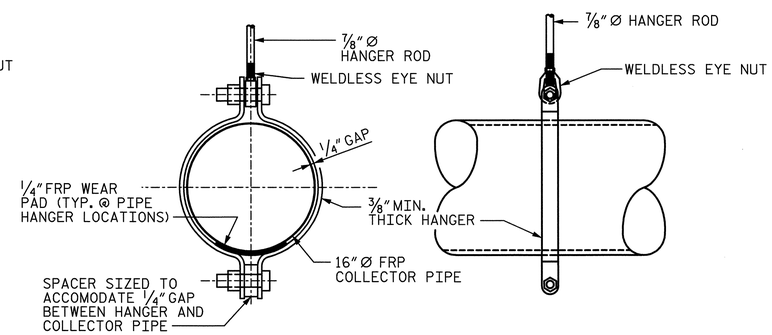

PIPE HANGER DETAIL (TYPE 2)

ALL COMPONENTS SHALL BE GALVANIZED AFTER FABRICATION.

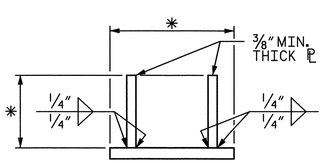

SECTION A-A

(STEEL CLEVIS & ⅞"Ø HANGER ROD NOT SHOWN FOR CLARITY)

* DIMENSIONS TO BE DETERMINED BY MANUFACTURER.

NOTES:

1. FOR ADDITIONAL NOTES, SEE SHEET 5 OF 5.

■ DIMENSION SHOWN IS AN APPROXIMATE LOCATION. FABRICATOR/CONTRACTOR SHALL ADJUST DIMENSIONS SUCH THAT PIPE MAINTAINS A MINIMUM SLOPE OF 0.3% TOWARDS THE OUTLET.

PROJECT NO. U-2524C

GUILFORD COUNTY

STATION: 9+75.28 -RPDY4-

SHEET 4 OF 5

STATE OF NORTH CAROLINA
DEPARTMENT OF TRANSPORTATION
RALEIGH
SUPERSTRUCTURE

STRUCTURE DRAINAGE SYSTEM DETAILS

-RAMP D-

PLANS PREPARED BY:

SIMPSON ENGINEERS & ASSOCIATES
5640 Dillard Drive
Suite 200
Cary, NC 27518
(919) 852-0468
(919) 852-0598 (Fax)
www.simpsonengr.com
LICENSURE NO. C-2521

NORTH CAROLINA PROFESSIONAL SEAL 023908 ENGINEER MARK A. AVERETTE
6-5-2013

REVISIONS							SHEET NO.
NO.	BY:	DATE:	NO.	BY:	DATE:		S-786
1			3				TOTAL SHEETS
2			4				836

DRAWN BY: T. BANKOVICH DATE: 4-13
CHECKED BY: M. AVERETTE DATE: 4-13
DESIGN ENGINEER OF RECORD: M. AVERETTE DATE: 4-13

6/5/2013 2:37:05 PM G:\Projects\2011\U-2524 (Guilford Co)\Structures\Ramp D\Drawings\Final\U-2524_sd_rpd_cds.dgn

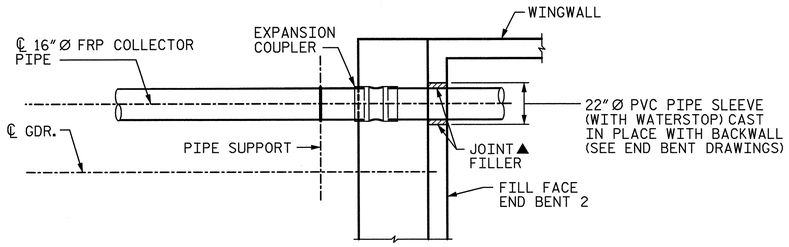

PLAN

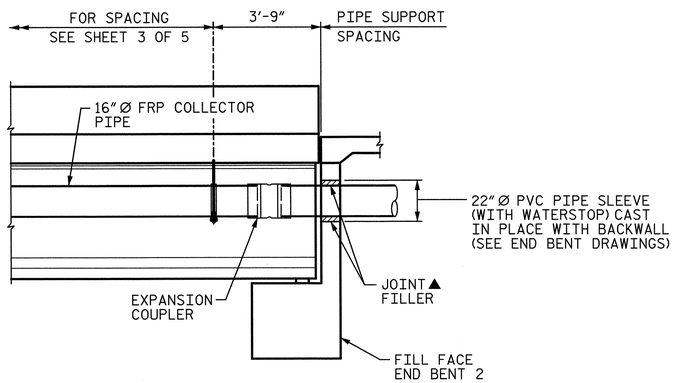

ELEVATION

COLLECTOR PIPE SYSTEM AT END BENT 2

STRUCTURE DRAINAGE SYSTEM NOTES:

THE ENTIRE COST FOR THE LABOR AND MATERIALS NECESSARY TO FABRICATE AND INSTALL FRP PIPE, PIPE SUPPORT AND PIPE ANCHOR ASSEMBLIES SHALL BE INCLUDED IN THE LUMP SUM PRICE BID FOR THE "STRUCTURE DRAINAGE SYSTEM." SEE SPECIAL PROVISIONS FOR STRUCTURE DRAINAGE SYSTEM.

ALL COLLECTOR PIPES, ELBOWS, COUPLERS, AND TEES SHALL BE FIBERGLASS REINFORCED PLASTIC PIPE MEETING THE SPECIFICATIONS OF ASTM D2996 AND THE ACCELERATED UV WEATHERING PERFORMANCE REQUIREMENTS OF ASTM D4329-05 PER PROCEDURE ASTM G154.

EACH PIPE SECTION SHALL HAVE A MINIMUM OF TWO HANGERS.

COLLECTOR PIPE SHALL BE SUPPORTED FROM THE CONCRETE DECK SLAB. NO ATTACHMENT TO THE GIRDERS WILL BE PERMITTED.

CONTRACTOR SHALL PROVIDE FRP COUPLINGS CAPABLE OF HANDLING THE ANTICIPATED MOVEMENTS. ADDITIONALLY FRP COUPLINGS SHALL PROVIDE HORIZONTAL ALIGNMENT TOLERANCES SUCH THAT THE 16"Ø FRP COLLECTOR PIPE AND COUPLINGS CAN CLOSELY FOLLOW THE VERTICAL AND HORIZONTAL CURVE OF THE STRUCTURE.

THE CONTRACTOR SHALL BE RESPONSIBLE FOR DETERMINING THE HORIZONTAL AND VERTICAL ALIGNMENT OF THE DRAINAGE SYSTEM USING NECESSARY FITTINGS, TEES, AND WYES TO PROVIDE A CONTINUOUS DRAINAGE SYSTEM.

CONCRETE INSERTS SHALL HAVE A MINIMUM WORKING LOAD TENSION CAPACITY OF 4.5 KIPS.

CONTRACTOR SHALL VERIFY LOCATION OF CONCRETE INSERTS IN REGARD TO ADJACENT INSERTS AND DECK DRAINS. IF SPACING/LOCATION OF INSERTS RESULTS IN REDUCED INSERT CAPACITY, CONTRACTOR SHALL SUBMIT INSERT SYSTEM WITH APPROPRIATE CAPACITY, GIVEN CONSTRAINTS, OR PROVIDED ALTERNATE CONNECTION/SUPPORT DETAILS FOR REVIEW AND APPROVAL OF THE ENGINEER PRIOR TO INSTALLATION.

DECK DRAIN PIPE SHALL BE ASTM D1785, SCHEDULE 40. ALL PVC FITTINGS SHALL BE MINIMUM ASTM D2665, SCHEDULE 40.

EXPANSION JOINT COUPLERS IN THE COLLECTOR PIPE SHALL HAVE A MINIMUM CAPACITY TO ACCOMMODATE 6-INCHES OF TOTAL MOVEMENT (3-INCHES EXPANSION/3-INCHES CONTRACTION).

AN OPTIONAL DETAIL FOR THE LONGITUDINAL RESTRAINTS AND THE LATERAL GUIDE MAY BE SUBMITTED FOR APPROVAL.

COLLECTOR PIPE SUPPORTS SHALL BE LOCATED WITHIN 12-INCHES, ± 4-INCHES, OF A COLLECTOR PIPE JOINT.

DECK DOWN-DRAIN PIPES SHALL BE CENTERED IN SLOTTED OPENING IN COLLECTOR PIPE REGARDLESS OF TEMPERATURE AT TIME OF INSTALLATION.

HANGER RODS SHALL BE ASTM A193, GRADE B7 OR CARBON STEEL ALL-THREAD HANGER RODS.

NUTS SHALL BE ASTM A194, GRADE 2H, HEAVY HEX NUTS.

THE DETAILS OF ALL PIPING, HARDWARE, OR OTHER MATERIAL SHALL BE PROVIDED BY THE CONTRACTOR AND IS SUBJECT TO THE APPROVAL OF THE ENGINEER.

AT LOCATIONS OF "KINKS" IN THE DRAINAGE SYSTEM AT BENT LOCATIONS DUE TO FLARING OF DECK, FIXED AND/OR EXPANSION COUPLERS SHALL BE DESIGNED FOR THE RESULTING HORIZONTAL ANGLE.

STRUCTURE DRAINAGE SYSTEM NOTES (CONTINUED):

WORKING DRAWINGS FOR THE DRAINAGE SYSTEM AND LAYOUT PLANS INCLUDING, BUT NOT LIMITED TO, PIPE SUPPORT BRACKETS, PIPE ALIGNMENT, PIPE LENGTHS, AND ALL NECESSARY FITTINGS, ELBOWS, WYES, ADAPTERS, GUIDES, RESTRAINTS, WEAR PADS, COUPLERS AND JOINTS SHALL BE DESIGNED AND SEALED BY A PROFESSIONAL ENGINEER LICENSED IN NORTH CAROLINA AND SUBMITTED FOR APPROVAL PRIOR TO ORDERING MATERIALS.

PIPE MANUFACTURER SHALL ENSURE THE PIPE AND THE PIPE SUPPORT BEARING AREA IS DESIGNED IN ACCORDANCE WITH THE HANGER SPACING PROVIDED IN THESE PLANS.

PIPE DESIGN MUST ALLOW VERTICAL FLEXURE FROM THE SUPERSTRUCTURE.

THE COLLECTOR PIPE SHALL CLOSELY FOLLOW THE LONGITUDINAL GRADE OF THE STRUCTURE WHILE MAINTAINING A MINIMUM OF 0.3% SLOPE AT ALL TIMES.

COUPLERS SHALL BE DESIGNED TO ACCOMMODATE A TURN AT EACH BENT IN ORDER TO FOLLOW THE HORIZONTAL AND VERTICAL CURVATURE OF THE BRIDGE OVERHANG.

THE PIPE MANUFACTURER SHALL ENSURE THE FRICTIONAL FORCE REQUIRED TO ACTIVATE THE EXPANSION COUPLERS DOES NOT OVERSTRESS THE COUPLER WALL BUILD-UP, DRAINAGE SYSTEM BRACKETS SUPPORTS OR LATERAL RESTRAINTS.

WASHERS SHALL BE ASTM F436 OR APPROVED EQUIVALENT.

BOLTS, NUTS, AND WASHERS SHALL BE GALVANIZED IN ACCORDANCE WITH THE STANDARD SPECIFICATIONS.

BOLT THREADS SHALL BE BURRED TO PREVENT LOOSENING.

PVC PIPE SHALL BE PAINTED TO MATCH THE FINAL SURFACE FINISH OF THE STRUCTURE WITH TWO COATS OF AN ACRYLIC OR LATEX PAINT THAT IS CHEMICALLY COMPATIBLE WITH PVC PRODUCTS AND MEETS THE REQUIREMENTS OF ARTICLE 1080-12 OF THE STANDARD SPECIFICATIONS. EACH COAT SHALL BE 2 DRY MILS THICK. DECK DRAINS SHALL BE ROUGHENED PRIOR TO PAINTING.

ALL METALLIC COMPONENTS IN THE DRAINAGE SYSTEM, EXCEPT STAINLESS STEEL AND MALLEABLE IRON PARTS, ARE REQUIRED TO BE HOT-DIPPED GALVANIZED PER NCDOT STANDARD SPECIFICATIONS. ELECTRO-PLATE COATING ON STEEL RODS, STEEL YOKE TYPE PIPE ROLLS, BRACKETS, OTHER STEEL HARDWARE IS CONSIDERED BY NCDOT AS TOO THIN FOR OUTDOOR APPLICATIONS.

ALL FRP PIPE AND PVC PIPE SHALL BE INSTALLED PER MANUFACTURER'S RECOMMENDATIONS.

ALL STRUCTURAL STEEL SHALL BE ASTM A36 OR APPROVED EQUAL UNLESS NOTED OTHERWISE.

THE GALVANIZED SURFACE SHALL BE CLEANED TO (SSPC SP-1) PRIOR TO COATING.

ALL FABRICATION SHALL CONFORM TO THE APPLICABLE SECTION OF THE NORTH CAROLINA DEPARTMENT OF TRANSPORTATION STANDARD SPECIFICATIONS FOR ROADS AND STRUCTURES.

ALL FRP PIPE SHALL BE PIGMENTED TO MATCH THE FINAL SURFACE FINISH OF THE ADJACENT STRUCTURE.

ALL FRP PIPE SIZES ARE SHOWN AS INSIDE DIAMETER SIZES.

FRP PIPE WITHIN EMBANKMENT AND PROJECTING THROUGH END BENT BACKWALL SHALL BE DESIGNED FOR THE APPLICATION BY THE PIPE ENGINEER.

FRP = FIBERGLASS REINFORCED PLASTIC

▲ CENTER 20"Ø STEEL PIPE SLEEVE IN BLOCKOUT AND FILL ANNULAR SPACE AROUND PIPE WITH JOINT FILLER IN ACCORDANCE WITH STANDARD SPECIFICATION ARTICLE 1028-1

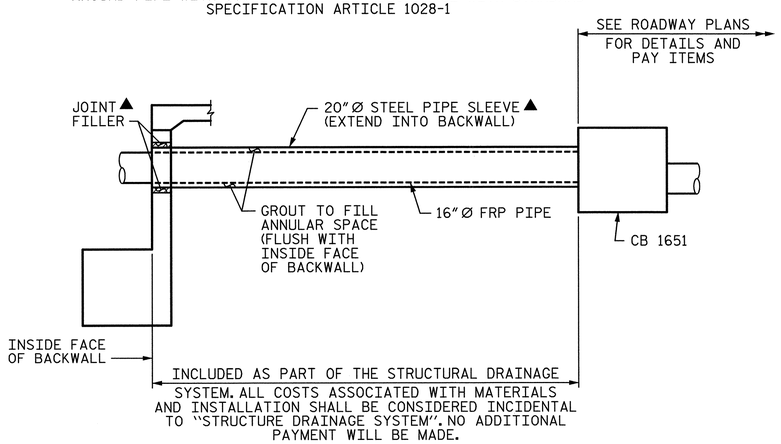

COLLECTOR PIPE SYSTEM BEYOND END BENT 2

ALL COMPONENTS OF COLLECTOR PIPE SYSTEM SHALL ACCOMODATE ANY FLARE/KINK NECESSARY TO REACH CATCH BASIN

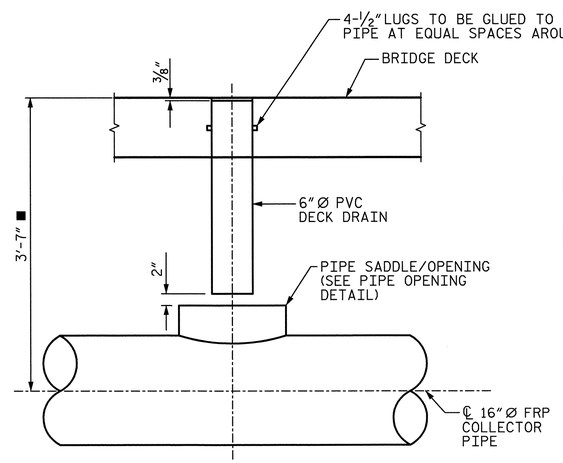

DRAIN OUTLET & PIPE CONNECTION

■ DIMENSION SHOWN IS AN APPROXIMATE LOCATION. FABRICATOR/CONTRACTOR SHALL ADJUST DIMENSIONS SUCH THAT PIPE MAINTAINS A MINIMUM SLOPE OF 0.3% TOWARDS THE OUTLET.

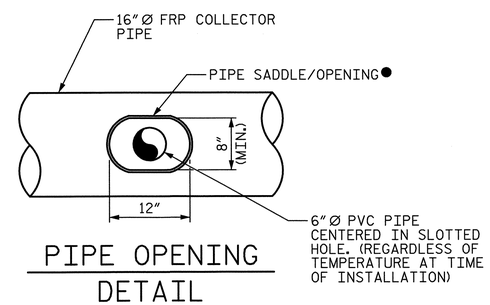

PIPE OPENING DETAIL

● FABRICATOR SHALL DETERMINE PIPE SADDLE/REINFORCEMENT FOR OPENING SIZE INDICATED. FABRICATOR SHALL SUBMIT SHOP DRAWINGS OF PIPE SADDLE/OPENING FOR REVIEW PRIOR TO BEGINNING FABRICATION.

PROJECT NO. U-2524C

GUILFORD COUNTY

STATION: 9+75.28 -RPDY4-

SHEET 5 OF 5

STATE OF NORTH CAROLINA
DEPARTMENT OF TRANSPORTATION
RALEIGH
SUPERSTRUCTURE

STRUCTURE DRAINAGE SYSTEM DETAILS

-RAMP D-

PLANS PREPARED BY:

SIMPSON ENGINEERS & ASSOCIATES
5640 Dillard Drive
Suite 200
Cary, NC 27518
(919) 852-0468
(919) 852-0598 (Fax)
www.simpsonengr.com
LICENSURE NO. C-2521

NORTH CAROLINA PROFESSIONAL SEAL 023908 ENGINEER MARK A. AVERETTE
6-5-2013

REVISIONS						SHEET NO.
NO.	BY:	DATE:	NO.	BY:	DATE:	S-787
1			3			TOTAL SHEETS
2			4			836

DRAWN BY: T. BANKOVICH DATE: 4-13
CHECKED BY: M. AVERETTE DATE: 4-13
DESIGN ENGINEER OF RECORD: M. AVERETTE DATE: 4-13

6/5/2013 2:37:09 PM G:\Projects\2011\U-2524 (Guilford Co)\Structures\Ramp D\Drawings\Final\U-2524_sd_rpd_cds.dgn

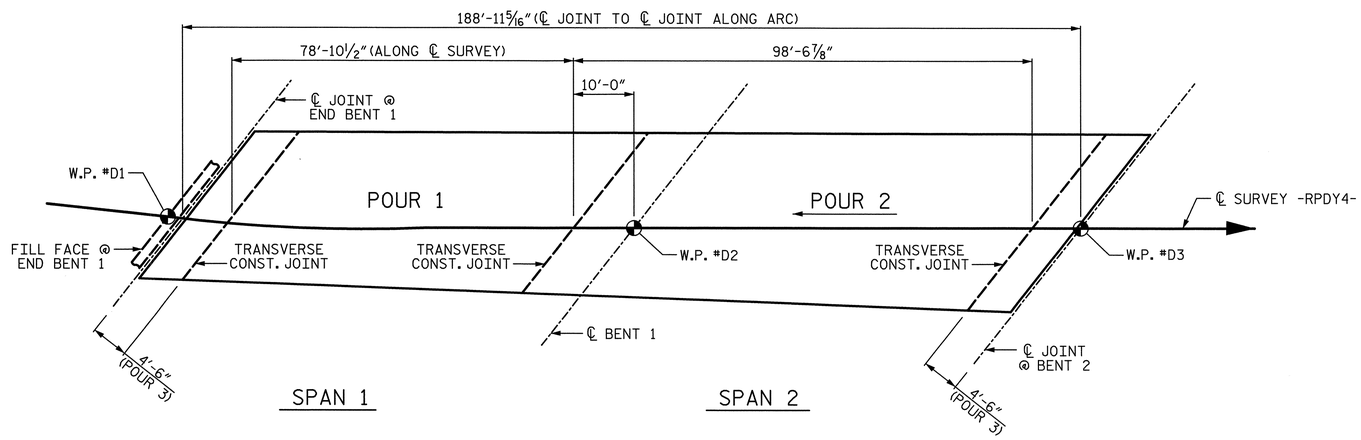

POUR SEQUENCE - 2 SPAN CONTINUOUS UNIT 1

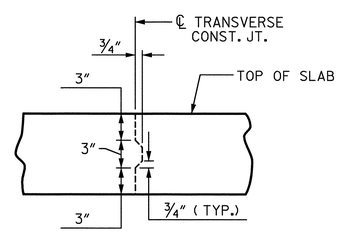

TRANSVERSE CONSTRUCTION JOINT DETAIL - UNIT 1

NOTE: REINFORCING STEEL IN SLAB NOT SHOWN.
LONGITUDINAL REINFORCING STEEL SHALL BE
CONTINUOUS THRU JOINT.

PROJECT NO. U-2524C
GUILFORD COUNTY
STATION: 9+75.28 -RPDY4-

SHEET 1 OF 2

STATE OF NORTH CAROLINA
DEPARTMENT OF TRANSPORTATION
RALEIGH

SUPERSTRUCTURE

POUR SEQUENCE DETAILS

-RAMP D-

REVISIONS						SHEET NO.
NO.	BY:	DATE:	NO.	BY:	DATE:	S-788
1			3			TOTAL SHEETS
2			4			836

PLANS PREPARED BY:

SIMPSON ENGINEERS & ASSOCIATES
5640 Dillard Drive
Suite 200
Cary, NC 27518
(919) 852-0468
(919) 852-0598 (Fax)
www.simpsonengr.com
LICENSURE NO. C-2521

NORTH CAROLINA PROFESSIONAL SEAL 023906 ENGINEER MARK A. AVERETTE
6-5-2013

DRAWN BY:	T. BANKOVICH	DATE:	4-13
CHECKED BY:	M. AVERETTE	DATE:	4-13
DESIGN ENGINEER OF RECORD:	M. AVERETTE	DATE:	4-13

6/5/2013 2:37:14 PM G:\Projects\2011\U-2524 (Guilford Co)\Structures\Ramp D\Drawings\Final\U-2524_sd_rpd_pseq.dgn

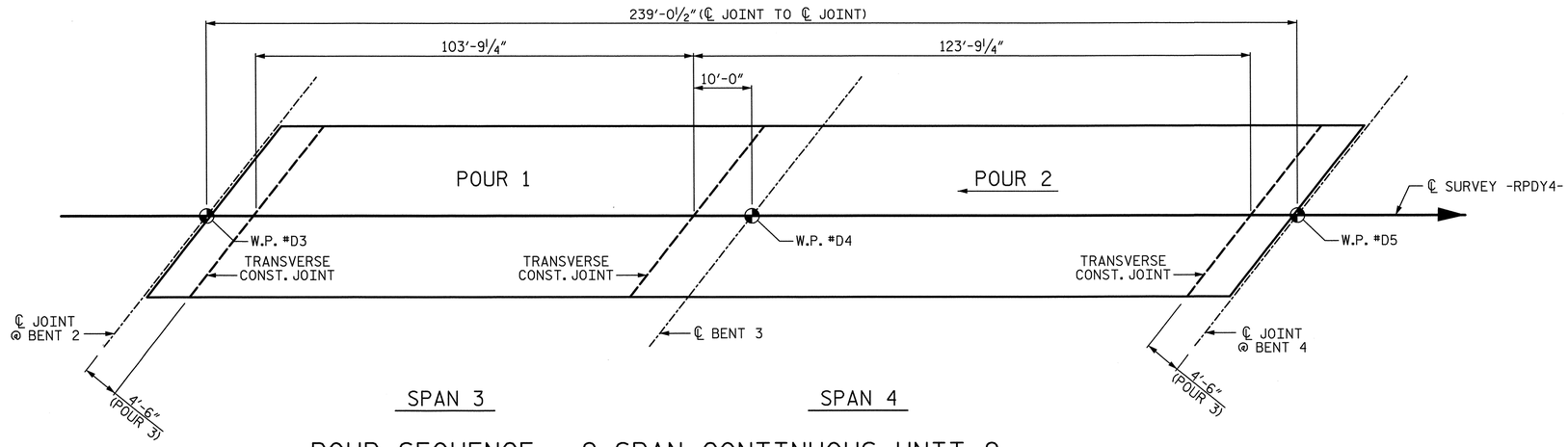

POUR SEQUENCE - 2 SPAN CONTINUOUS UNIT 2

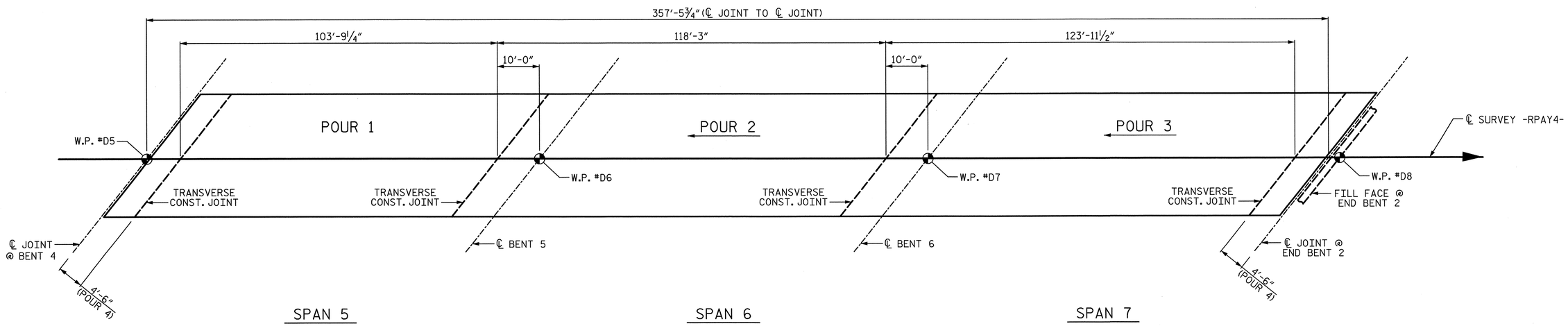

POUR SEQUENCE - 3 SPAN CONTINUOUS UNIT 3

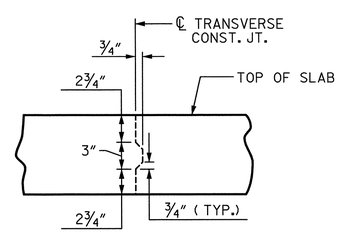

TRANSVERSE CONSTRUCTION JOINT DETAIL - UNITS 2 & 3

NOTE: REINFORCING STEEL IN SLAB NOT SHOWN.
LONGITUDINAL REINFORCING STEEL SHALL BE CONTINUOUS THRU JOINT.

PROJECT NO. U-2524C
GUILFORD COUNTY
STATION: 9+75.28 -RPDY4-

SHEET 2 OF 2

STATE OF NORTH CAROLINA
DEPARTMENT OF TRANSPORTATION
RALEIGH
SUPERSTRUCTURE

POUR SEQUENCE DETAILS

-RAMP D-

PLANS PREPARED BY:
SIMPSON ENGINEERS & ASSOCIATES
5640 Dillard Drive
Suite 200
Cary, NC 27518
(919) 852-0468
(919) 852-0598 (Fax)
www.simpsonengr.com
LICENSURE NO. C-2521

NORTH CAROLINA PROFESSIONAL SEAL 023908 ENGINEER MARK A. AVERETTE
6-5-2013

REVISIONS								SHEET NO.
NO.	BY:	DATE:	NO.	BY:	DATE:			S-789
1			3					TOTAL SHEETS
2			4					836

DRAWN BY: T. BANKOVICH DATE: 4-13
CHECKED BY: M. AVERETTE DATE: 4-13
DESIGN ENGINEER OF RECORD: M. AVERETTE DATE: 4-13

6/5/2013 2:37:19 PM G:\Projects\2011\U-2524 (Guilford Co)\Structures\Ramp D\Drawings\Final\U-2524_sd_rpd_pseq.dgn

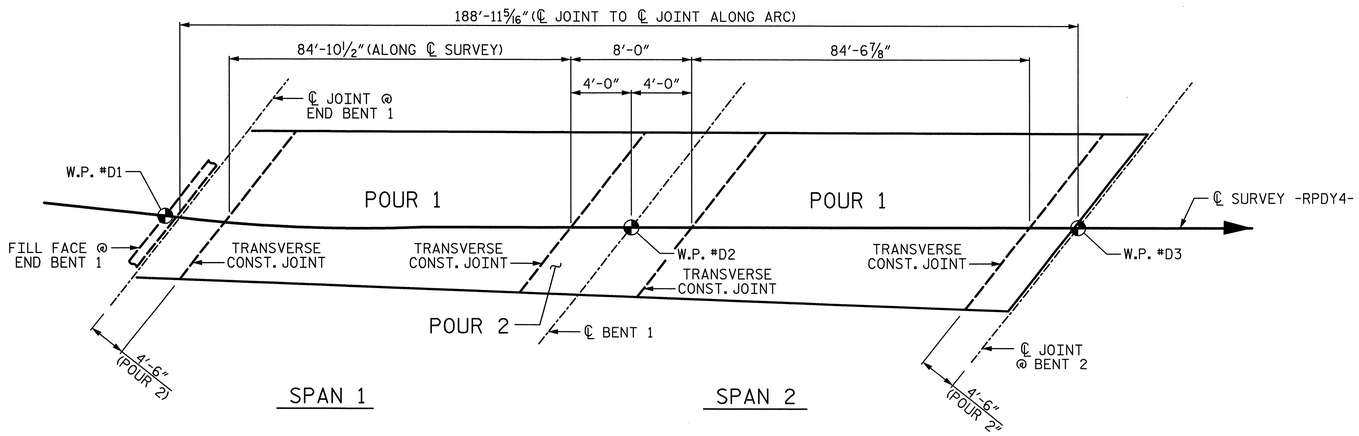

OPTIONAL POUR SEQUENCE - 2 SPAN CONTINUOUS UNIT 1

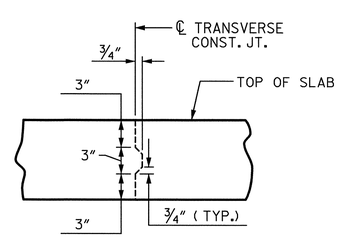

TRANSVERSE CONSTRUCTION JOINT DETAIL - UNIT 1

NOTE: REINFORCING STEEL IN SLAB NOT SHOWN.
LONGITUDINAL REINFORCING STEEL SHALL BE
CONTINUOUS THRU JOINT.

PROJECT NO. U-2524C
GUILFORD COUNTY
STATION: 9+75.28 -RPDY4-

SHEET 1 OF 2

STATE OF NORTH CAROLINA
DEPARTMENT OF TRANSPORTATION
RALEIGH
SUPERSTRUCTURE
OPTIONAL
POUR SEQUENCE
DETAILS
-RAMP D-

PLANS PREPARED BY:
SIMPSON ENGINEERS & ASSOCIATES
5640 Dillard Drive
Suite 200
Cary, NC 27518
(919) 852-0468
(919) 852-0598 (Fax)
www.simpsonengr.com
LICENSURE NO. C-2521

NORTH CAROLINA PROFESSIONAL SEAL 023906 ENGINEER MARK A. AVERETTE
6-5-2013

REVISIONS						SHEET NO.
NO.	BY:	DATE:	NO.	BY:	DATE:	S-790
1			3			TOTAL SHEETS
2			4			836

DRAWN BY: T. BANKOVICH DATE: 4-13
CHECKED BY: M. AVERETTE DATE: 4-13
DESIGN ENGINEER OF RECORD: M. AVERETTE DATE: 4-13

6/5/2013 2:37:23 PM G:\Projects\2011\U-2524 (Guilford Co)\Structures\Ramp D\Drawings\Final\U-2524_sd_rpd_pseq.dgn

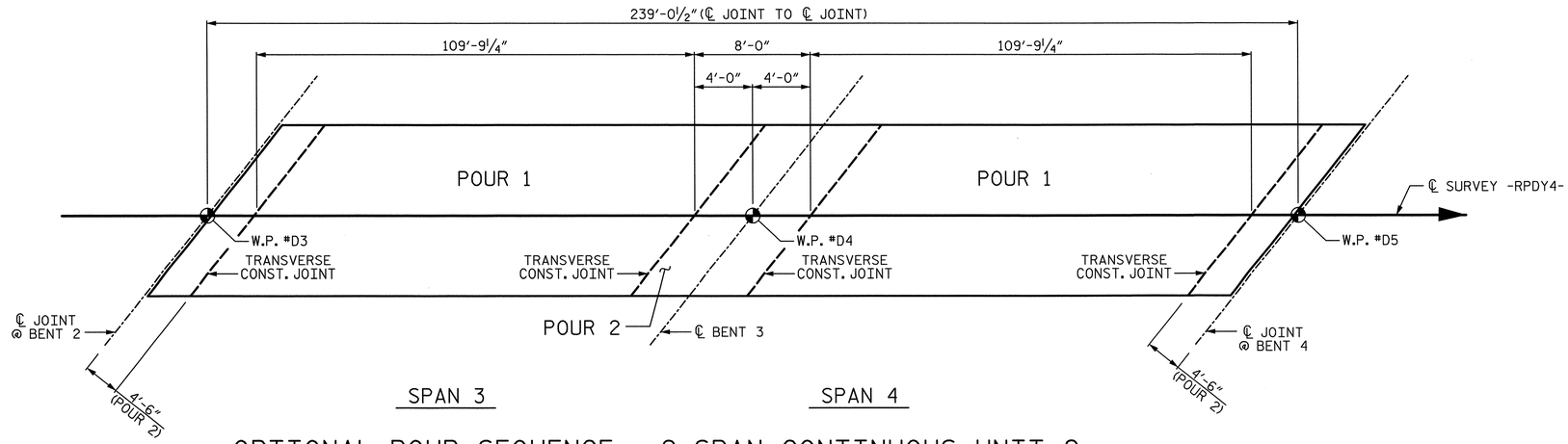

OPTIONAL POUR SEQUENCE - 2 SPAN CONTINUOUS UNIT 2

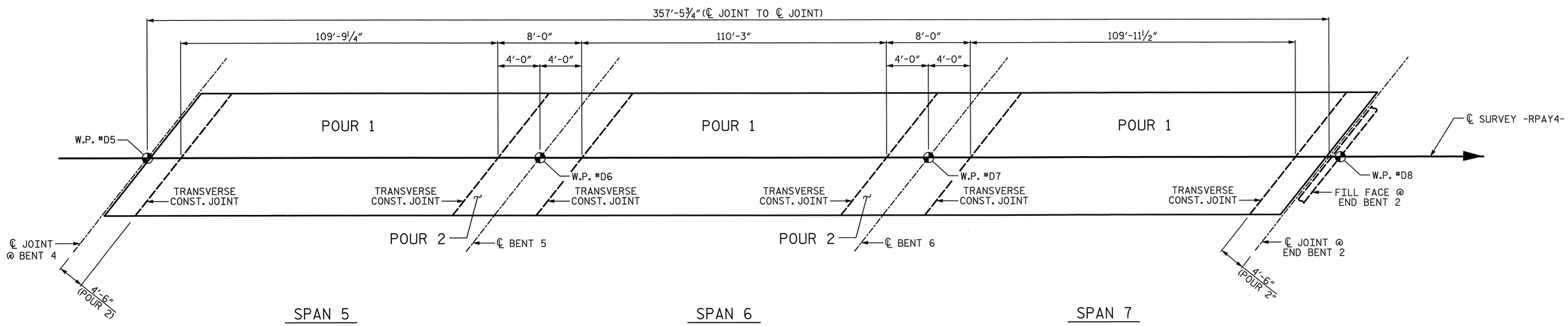

OPTIONAL POUR SEQUENCE - 3 SPAN CONTINUOUS UNIT 3

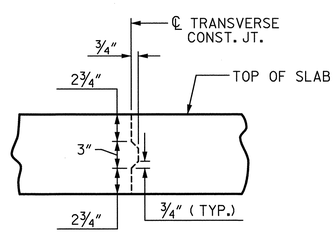

TRANSVERSE CONSTRUCTION JOINT DETAIL - UNITS 2 & 3

NOTE: REINFORCING STEEL IN SLAB NOT SHOWN.
LONGITUDINAL REINFORCING STEEL SHALL BE CONTINUOUS THRU JOINT.

PROJECT NO. U-2524C
GUILFORD COUNTY
STATION: 9+75.28 -RPDY4-

SHEET 2 OF 2

STATE OF NORTH CAROLINA
DEPARTMENT OF TRANSPORTATION
RALEIGH

SUPERSTRUCTURE
OPTIONAL POUR SEQUENCE DETAILS
-RAMP D-

PLANS PREPARED BY:
SIMPSON ENGINEERS & ASSOCIATES
5640 Dillard Drive
Suite 200
Cary, NC 27518
(919) 852-0468
(919) 852-0598 (Fax)
www.simpsonengr.com
LICENSURE NO. C-2521

NORTH CAROLINA PROFESSIONAL SEAL 023908 ENGINEER MARK A. AVERETTE
6-5-2013

REVISIONS								SHEET NO.
NO.	BY:	DATE:	NO.	BY:	DATE:			S-791
1			3					TOTAL SHEETS
2			4					836

DRAWN BY: T. BANKOVICH DATE: 4-13
CHECKED BY: M. AVERETTE DATE: 4-13
DESIGN ENGINEER OF RECORD: M. AVERETTE DATE: 4-13

6/5/2013 2:37:27 PM G:\Projects\2011\U-2524 (Guilford Co)\Structures\Ramp D\Drawings\Final\U-2524_sd_rpd_pseq.dgn

NOTES:

FOR DIAPHRAGM DETAILS, SEE "INTERMEDIATE STEEL DIAPHRAGMS" SHEETS.

FOR ELASTOMERIC BEARINGS AND STEEL SOLE PLATE DETAILS, SEE "ELASTOMERIC BEARING DETAILS" SHEET.

SEE "AASHTO TYPE IV PRESTRESSED CONCRETE GDR. CONT. FOR L.L., SHEET 2 OF 2 FOR LOCATION OF INTERMEDIATE DIAPHRAGMS IN SPANS 1 & 2.

SEE "72" PRESTRESSED CONCRETE MODIFIED BULB TEE CONTINUOUS FOR LIVE LOAD", SHEET 3 OF 3 FOR LOCATION OF INTERMEDIATE DIAPHRAGMS IN SPAN 3 & 4.

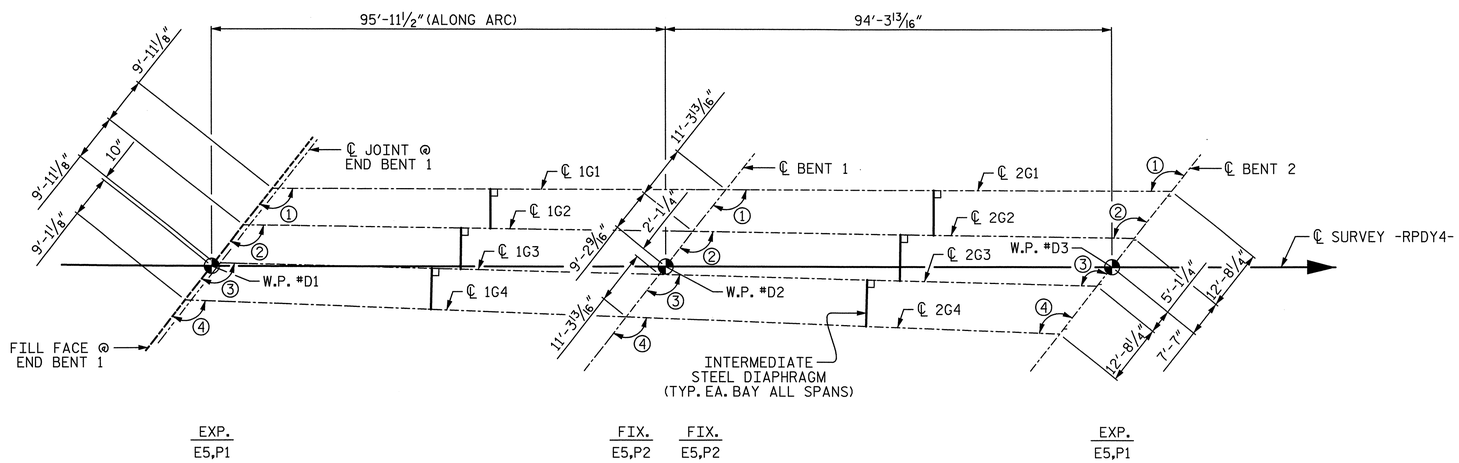

PLAN - 2 SPAN CONTINUOUS UNIT 1

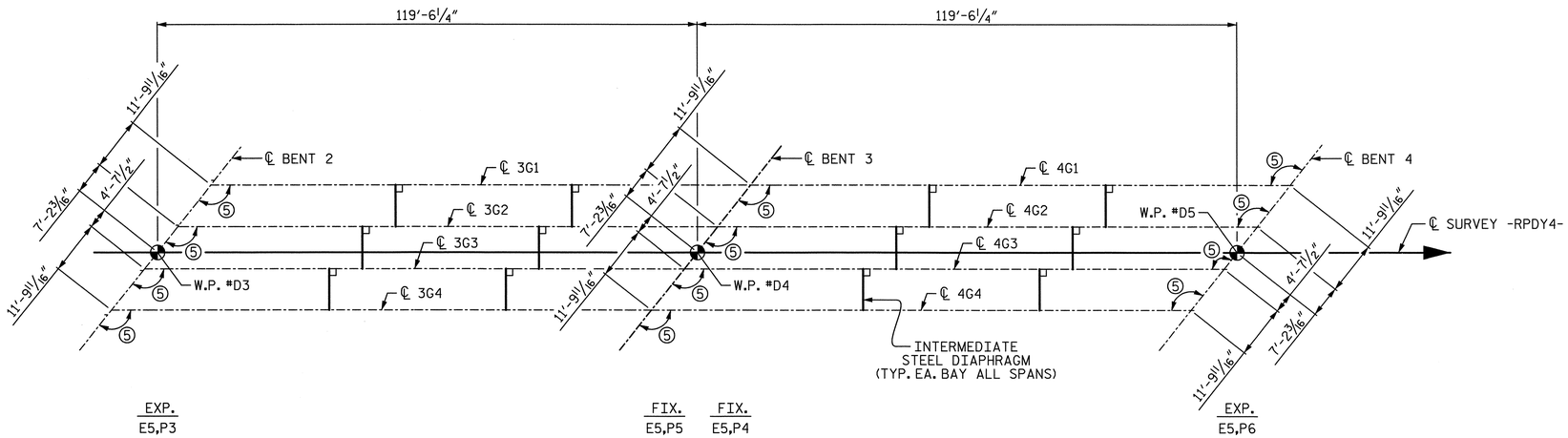

PLAN - 2 SPAN CONTINUOUS UNIT 2

(ALL GIRDERS ARE PARALLEL)

ANGLES

1. 128°-18'-49"
2. 127°-39'-16"
3. 126°-58'-59"
4. 126°-18'-00"
5. 128°-26'-19"

PROJECT NO. U-2524C

GUILFORD COUNTY

STATION: 9+75.28 -RPDY4-

SHEET 1 OF 2

STATE OF NORTH CAROLINA
DEPARTMENT OF TRANSPORTATION
RALEIGH

SUPERSTRUCTURE

GIRDER LAYOUT

-RAMP D-

REVISIONS						SHEET NO.
NO.	BY:	DATE:	NO.	BY:	DATE:	S-792
1			3			TOTAL SHEETS
2			4			836

PLANS PREPARED BY:

SIMPSON ENGINEERS & ASSOCIATES
5640 Dillard Drive
Suite 200
Cary, NC 27518
(919) 852-0468
(919) 852-0598 (Fax)
www.simpsonengr.com
LICENSURE NO. C-2521

NORTH CAROLINA PROFESSIONAL ENGINEER SEAL 023906 MARK A. AVERETTE
6-5-2013

DRAWN BY:	T. BANKOVICH	DATE:	4-13
CHECKED BY:	M. AVERETTE	DATE:	4-13
DESIGN ENGINEER OF RECORD:	M. AVERETTE	DATE:	4-13

6/5/2013 2:37:32 PM G:\Projects\2011\U-2524 (Guilford Co)\Structures\Ramp D\Drawings\Final\U-2524_sd_rpd_fp.dgn

NOTES:

FOR DIAPHRAGM DETAILS, SEE "INTERMEDIATE STEEL DIAPHRAGMS" SHEET.

FOR ELASTOMERIC BEARINGS AND STEEL SOLE PLATE DETAILS, SEE "ELASTOMERIC BEARING DETAILS" SHEET.

SEE "72" PRESTRESSED CONCRETE MODIFIED BULB TEE CONTINUOUS FOR LIVE LOAD", SHEET 3 OF 3 FOR LOCATION OF INTERMEDIATE DIAPHRAGMS IN SPANS 5, 6, & 7.

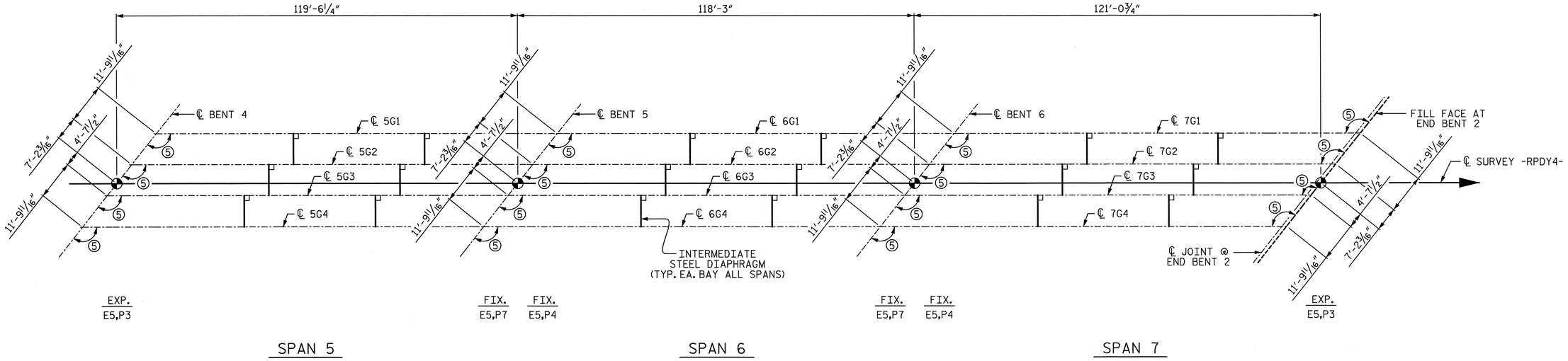

PLAN - 3 SPAN CONTINUOUS UNIT 3

(ALL GIRDERS ARE PARALLEL)

ANGLES

(5) 128°-26'-19"

PROJECT NO. U-2524C

GUILFORD COUNTY

STATION: 9+75.28 -RPDY4-

SHEET 2 OF 2

STATE OF NORTH CAROLINA
DEPARTMENT OF TRANSPORTATION
RALEIGH

SUPERSTRUCTURE

GIRDER LAYOUT

-RAMP D-

REVISIONS						SHEET NO.
NO.	BY:	DATE:	NO.	BY:	DATE:	S-793
1			3			TOTAL SHEETS
2			4			836

PLANS PREPARED BY:

SIMPSON ENGINEERS & ASSOCIATES
5640 Dillard Drive
Suite 200
Cary, NC 27518
(919) 852-0468
(919) 852-0598 (Fax)
www.simpsonengr.com
LICENSURE NO. C-2521

NORTH CAROLINA PROFESSIONAL SEAL 023906 ENGINEER MARK A. AVERETTE
6-5-2013

DRAWN BY:	T. BANKOVICH	DATE:	4-13
CHECKED BY:	M. AVERETTE	DATE:	4-13
DESIGN ENGINEER OF RECORD:	M. AVERETTE	DATE:	4-13

6/5/2013 2:37:37 PM G:\Projects\2011\U-2524 (Guilford Co)\Structures\Ramp D\Drawings\Final\U-2524_sd_rpd_fp.dgn

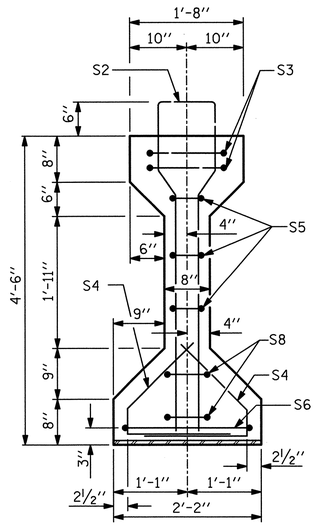

SECTION A-A

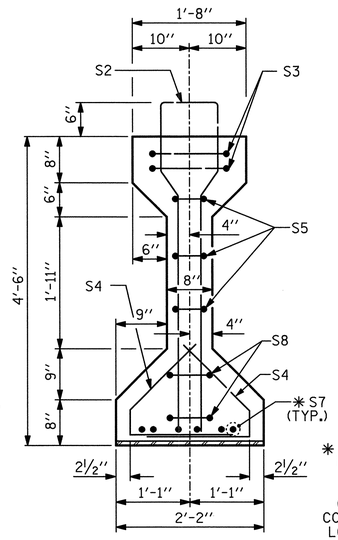

SECTION B-B

✱ FOR S7 BARS, SEE DETAIL "A" OF PRESTRESSED CONCRETE GIRDER CONTINUOUS FOR LIVE LOAD DETAILS SHEET

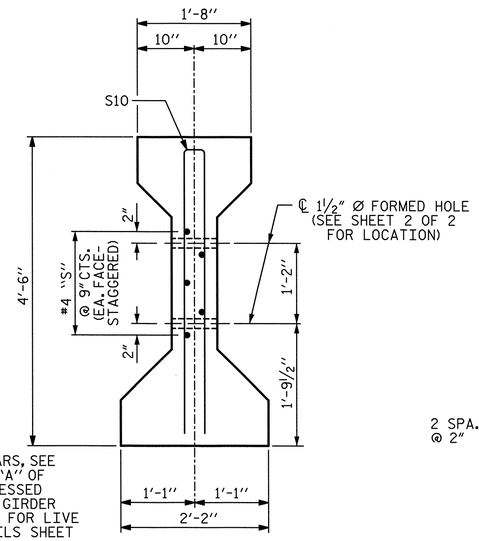

SECTION C-C

(S1 BARS NOT SHOWN)

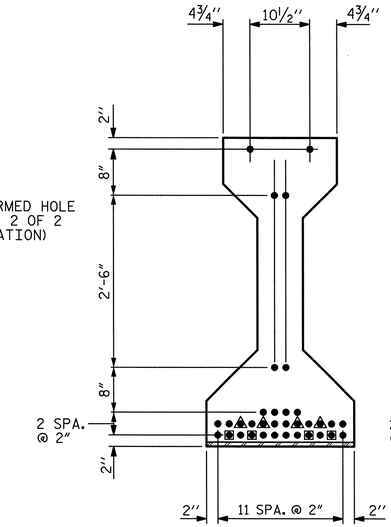

AT END OF GIRDER

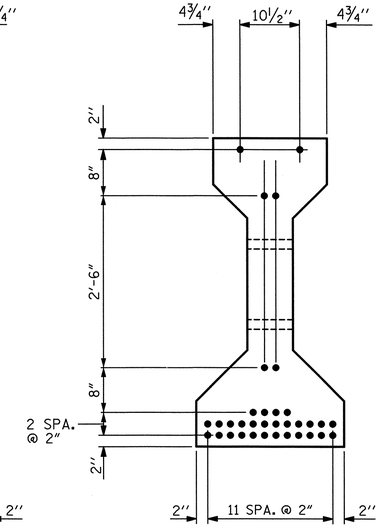

AT ℄ OF GIRDER

0.6" Ø LOW RELAXATION STRAND LAYOUT

DEBONDING LEGEND

- ● FULLY BONDED STRANDS
- ▲ STRANDS DEBONDED FOR 6'-0" FROM END OF GIRDER
- ⊡ STRANDS DEBONDED FOR 12'-0" FROM END OF GIRDER

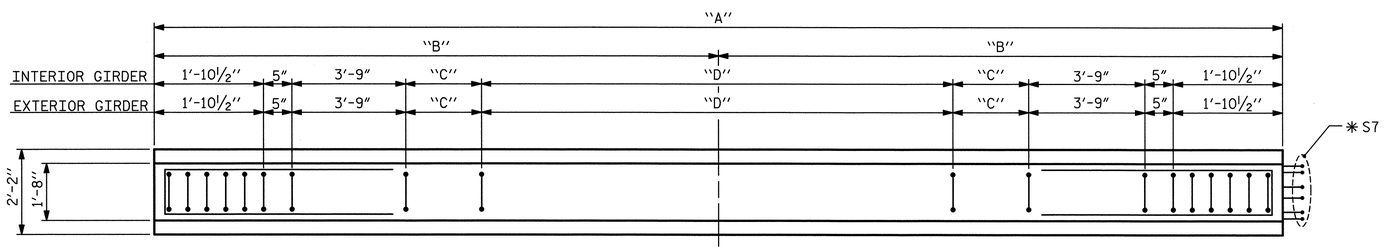

PLAN OF GIRDER

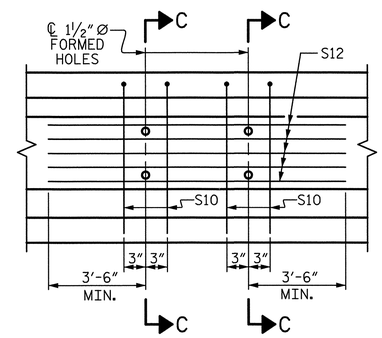

PARTIAL ELEVATION

SHOWING INTERMEDIATE DIAPHRAGM REINFORCING STEEL FOR INTERIOR GIRDERS.

✱✱ SEE "GIRDER DIMENSION TABLE ON SHEET 2 OF 2.

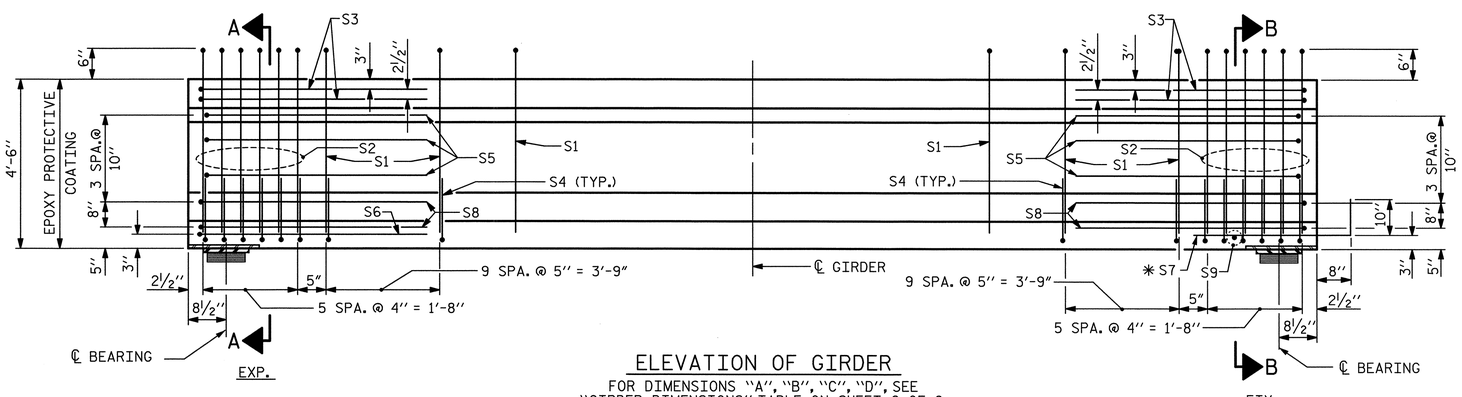

ELEVATION OF GIRDER

FOR DIMENSIONS "A", "B", "C", "D", SEE "GIRDER DIMENSIONS" TABLE ON SHEET 2 OF 2.

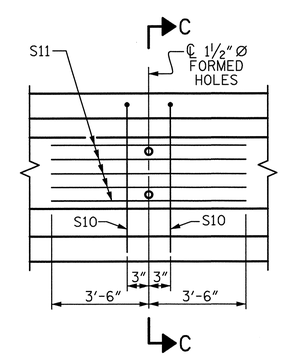

PARTIAL ELEVATION

SHOWING INTERMEDIATE DIAPHRAGM REINFORCING STEEL FOR EXTERIOR GIRDERS.

0.6" Ø L. R. GRADE 270 STRANDS

AREA (SQUARE INCHES)	ULTIMATE STRENGTH (LBS. PER STRAND)	APPLIED PRESTRESS (LBS. PER STRAND)
0.217	58,600	43,950

REINFORCING STEEL FOR ONE GIRDER

	BAR	NUMBER	SIZE	TYPE	LENGTH	WEIGHT
1G1 & 2G1	S1	74	4	1	10'-8"	527
1G2 & 2G2	S1	73	4	1	10'-8"	520
1G3 & 2G3	S1	73	4	1	10'-8"	520
1G4 & 2G4	S1	72	4	1	10'-8"	513
	S2	12	6	1	10'-8"	192
	S3	4	4	2	9'-1"	24
	S4	64	4	3	3'-5"	146
	S5	6	4	2	8'-5"	34
	S6	1	4	2	9'-11"	7
	✱ S7	6	5	STR	3'-8"	23
	S8	4	4	2	8'-7"	23
	S9	1	3	STR	1'-10"	1
EXTERIOR GDR.	S10	2	5	2	8'-8"	18
INTERIOR GDR.	S10	4	5	2	8'-8"	36
EXTERIOR GDR.	S11	5	4	STR	7'-0"	23
INTERIOR GDR.	S12	5	4	STR	14'-0"	47

✱ NOTE: S7 BARS SHALL BE BENT BEFORE SHIPMENT. HEAT BENDING SHALL NOT BE ALLOWED.

BAR TYPES

ALL BAR DIMENSIONS ARE OUT-TO-OUT

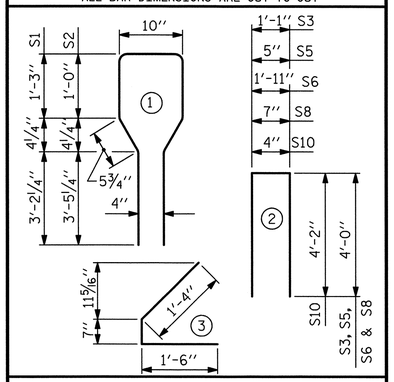

QUANTITIES FOR ONE GIRDER

	REINFORCING STEEL LB.	8000 PSI CONCRETE C.Y.	0.6" Ø L.R. STRANDS No.
EXTERIOR GIRDER	✱✱	✱✱	34
INTERIOR GIRDER	✱✱	✱✱	34

GIRDERS REQUIRED

NUMBER	LENGTH	TOTAL LENGTH
8	✱✱	733'-0½"

PROJECT NO. U-2524C

GUILFORD COUNTY

STATION: 9+75.28 -RPDY4-

SHEET 1 OF 2

PLANS PREPARED BY:

SIMPSON ENGINEERS & ASSOCIATES

5640 Dillard Drive
Suite 200
Cary, NC 27518
(919) 852-0468
(919) 852-0598 (Fax)
www.simpsonengr.com

LICENSURE NO. C2521

NORTH CAROLINA PROFESSIONAL SEAL 023906 ENGINEER MARK A. AVERETTE 6-5-2013

STATE OF NORTH CAROLINA
DEPARTMENT OF TRANSPORTATION
RALEIGH

SUPERSTRUCTURE
AASHTO TYPE IV
PRESTRESSED CONCRETE
GDR. CONT. FOR L.L.
(2 SPAN CONTINUOUS UNIT 1)
(SPANS 1 & 2)
-RAMP D-

REVISIONS						SHEET NO.
NO.	BY:	DATE:	NO.	BY:	DATE:	S-794
1			3			TOTAL SHEETS
2			4			836

DRAWN BY: T. BANKOVICH DATE: 4-13
CHECKED BY: M. AVERETTE DATE: 4-13
DESIGN ENGINEER OF RECORD: M. AVERETTE DATE: 4-13

6/5/2013 2:37:41 PM G:\Projects\2011\U-2524 (Guilford Co)\Structures\Ramp D\Drawings\Final\U-2524_sd_rpd_pcg.dgn

GIRDER DIMENSIONS

SPAN	GIRDER	"A"	"B"	"C"	"D"	"E"	"F"	"G"	8,000 PSI CONCRETE (CY)	REINFORCING STEEL (LB)
1	1G1	92'-10 1/4"	46'-5 1/8"	7 5/8"	54-#4 S1 @ 1'-6" CTS.	43'-6"	49'-4 1/4"	N/A	18.8	1018
	1G2	92'-0 3/8"	46'-0 3/16"	11 11/16"	53-#4 S1 @ 1'-6" CTS.	43'-6"	42'-4 1/8"	6'-2 1/4"	18.7	1053
	1G3	91'-2 5/8"	45'-7 5/16"	6 13/16"	53-#4 S1 @ 1'-6" CTS.	43'-6"	41'-7 1/2"	6'-1 1/8"	18.5	1053
	1G4	90'-5"	45'-2 1/2"	11"	52-#4 S1 @ 1'-6" CTS.	49'-6"	40'-11"	N/A	18.3	1004
2	2G1	92'-10 1/4"	46'-5 1/8"	7 5/8"	54-#4 S1 @ 1'-6" CTS.	43'-0"	49'-10 1/4"	N/A	18.8	1018
	2G2	92'-0 3/8"	46'-0 3/16"	11 11/16"	53-#4 S1 @ 1'-6" CTS.	43'-0"	42'-0 1/8"	7'-0 1/4"	18.7	1053
	2G3	91'-2 5/8"	45'-7 5/16"	6 13/16"	53-#4 S1 @ 1'-6" CTS.	43'-0"	41'-3 5/8"	6'-11"	18.5	1053
	2G4	90'-5"	45'-2 1/2"	11"	52-#4 S1 @ 1'-6" CTS.	49'-9 3/4"	40'-7 1/4"	N/A	18.3	1004

NOTES:

ALL PRESTRESSING STRANDS SHALL BE 7-WIRE LOW-RELAXATION GRADE 270 STRANDS AND SHALL CONFORM TO AASHTO M203 EXCEPT FOR SAMPLING REQUIREMENTS WHICH SHALL BE IN ACCORDANCE WITH THE STANDARD SPECIFICATIONS.

ALL REINFORCING STEEL SHALL BE GRADE 60.

APPLY EPOXY PROTECTIVE COATING TO END OF GIRDER SURFACES INDICATED IN ELEVATION VIEW.

EMBEDDED PLATE "B-1" SHALL BE GALVANIZED IN ACCORDANCE WITH THE STANDARD SPECIFICATIONS. BEVEL EDGES OF PLATE "B-1" TO GIVE CLOSE FIT BUT NOT TIGHT FIT TO STEEL CASTING FORM.

ANCHOR STUDS SHALL CONFORM TO AASHTO M169 GRADES 1010 THROUGH 1020 OR APPROVED EQUAL, AND SHALL MEET THE TYPE "B" REQUIREMENTS OF SUBSECTION 7.3 OF THE ANSI/AASHTO/AWS D1.5 BRIDGE WELDING CODE.

AT ENDS OF GIRDERS TO BE EMBEDDED IN CONCRETE DIAPHRAGMS OR END WALLS, PRESTRESSING STRANDS MAY EXTEND A MAXIMUM OF 2" BEYOND THE GIRDER ENDS. OTHERWISE, PRESTRESSING STRANDS SHALL BE CUT FLUSH WITH THE GIRDER ENDS.

THE TRANSFER OF LOAD FROM THE ANCHORAGES TO THE GIRDER SHALL BE DONE WHEN CONCRETE HAS REACHED A COMPRESSIVE STRENGTH OF NOT LESS THAN 6400 PSI.

DEPENDING ON THE TYPE OF SYSTEM USED TO SUPPORT THE DECK SLAB FORMS, PRESET ANCHORS MAY BE NECESSARY IN THE PRESTRESSED CONCRETE GIRDER.

THE TOP SURFACE OF THE GIRDER, EXCLUDING THE OUTSIDE 4", SHALL BE RAKED TO A DEPTH OF 1/4".

THE CONTRACTOR HAS THE OPTION TO PROVIDE, AT NO ADDITIONAL COST TO THE DEPARTMENT, 2 ADDITIONAL STRANDS AT THE TOP OF THE GIRDER TO FACILITATE TYING OF THE REINFORCING STEEL. THESE STRANDS SHALL BE PULLED TO A LOAD OF 4500 lbs.

APPLY EPOXY PROTECTIVE COATING TO END OF GIRDER SURFACES INDICATED IN ELEVATION VIEW.

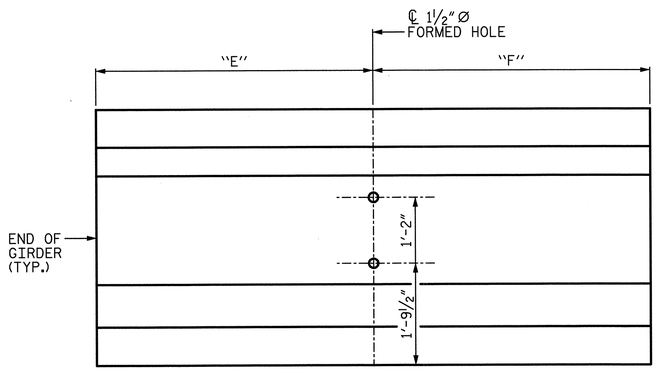

EXTERIOR GIRDERS

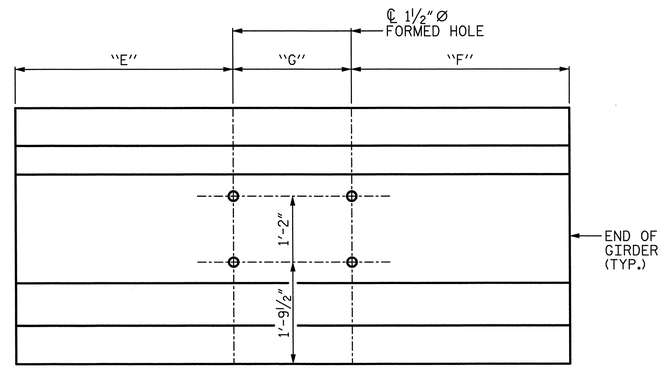

INTERIOR GIRDERS

LOCATION OF 1 1/2" Ø HOLES

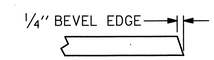

SECTION "G"

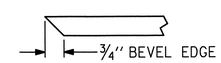

SECTION "F"

(SEE NOTES)

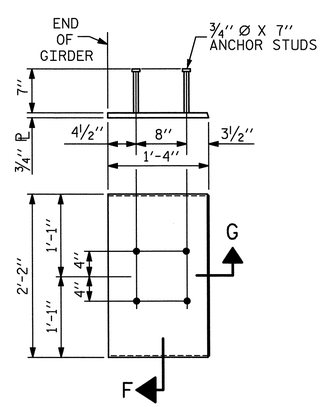

EMBEDDED PLATE "B-1" DETAILS FOR AASHTO TYPE IV GIRDERS

(2 REQ'D PER GIRDER)

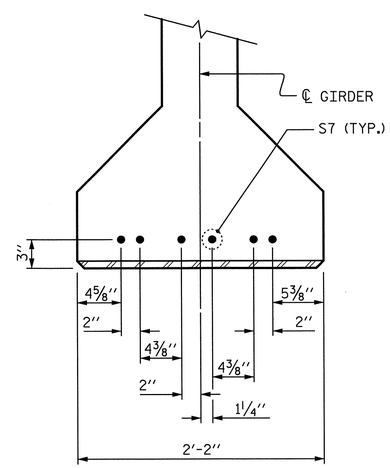

DETAIL "A"

PROJECT NO. U-2524C

GUILFORD COUNTY

STATION: 9+75.28 -RPDY4-

SHEET 2 OF 2

STATE OF NORTH CAROLINA
DEPARTMENT OF TRANSPORTATION
RALEIGH

SUPERSTRUCTURE
AASHTO TYPE IV PRESTRESSED CONCRETE GDR. CONT. FOR L.L. (DETAILS)
-RAMP D-

PLANS PREPARED BY:

SIMPSON ENGINEERS & ASSOCIATES
5640 Dillard Drive
Suite 200
Cary, NC 27518
(919) 852-0468
(919) 852-0598 (Fax)
www.simpsonengr.com
LICENSURE NO. C-2521

NORTH CAROLINA PROFESSIONAL ENGINEER SEAL 023906 MARK A. AVERETTE
6-5-2013

REVISIONS						SHEET NO.
NO.	BY:	DATE:	NO.	BY:	DATE:	S-795
1			3			TOTAL SHEETS
2			4			836

DRAWN BY: T. BANKOVICH DATE: 4-13
CHECKED BY: M. AVERETTE DATE: 4-13
DESIGN ENGINEER OF RECORD: M. AVERETTE DATE: 4-13

6/5/2013 2:37:46 PM G:\Projects\2011\U-2524 (Guilford Co)\Structures\Ramp D\Drawings\Final\U-2524_sd_rpd_pcg.dgn

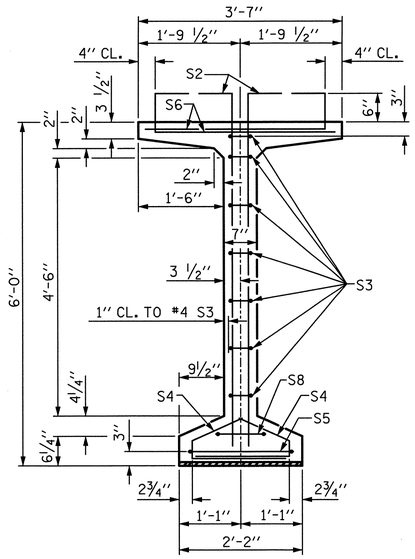

SECTION A-A

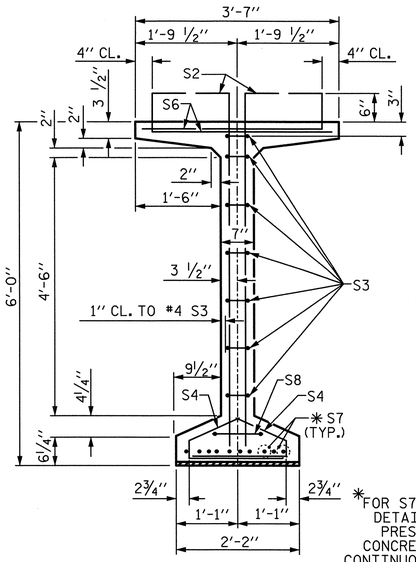

SECTION B-B

✳FOR S7 BARS. SEE DETAIL "C" OF PRESTRESSED CONCRETE GIRDER CONTINUOUS FOR LIVE LOAD DETAILS SHEET

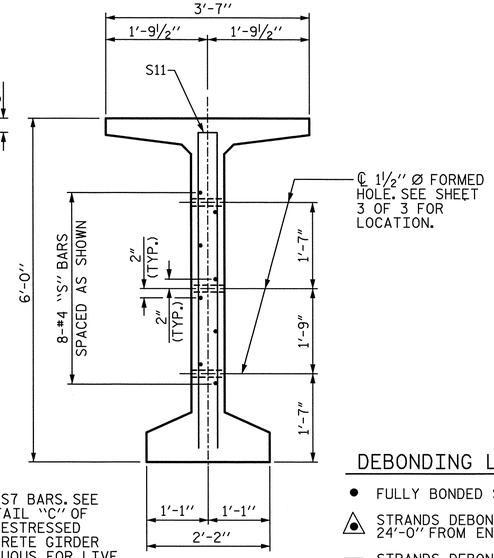

SECTION C-C

(S1, S6 AND S9 BARS NOT SHOWN)

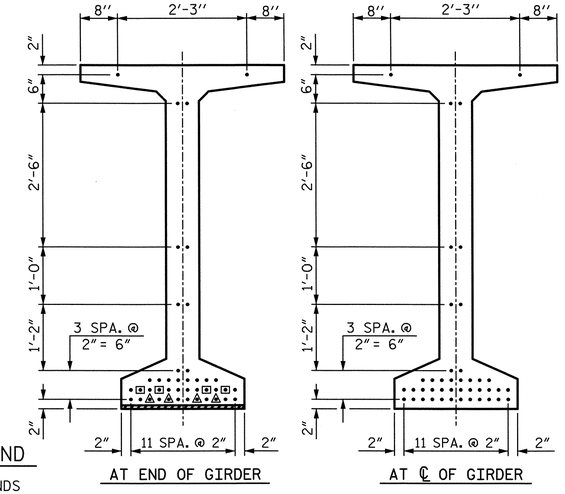

0.6" Ø LOW RELAXATION STRAND LAYOUT

DEBONDING LEGEND

- ● FULLY BONDED STRANDS
- ◬ STRANDS DEBONDED FOR 24'-0" FROM END OF GIRDER
- ⊡ STRANDS DEBONDED FOR 6'-0" FROM END OF GIRDER

0.6" Ø L. R. GRADE 270 STRANDS

AREA (SQUARE INCHES)	ULTIMATE STRENGTH (LBS. PER STRAND)	APPLIED PRESTRESS (LBS. PER STRAND)
0.217	58,600	43,950

REINFORCING STEEL FOR ONE GDR

	BAR	NUMBER	SIZE	TYPE	LENGTH	WEIGHT
EXTERIOR GDR.	S1	158	5	1	6'-10"	1126
INTERIOR GDR.	S1	158	5	1	6'-10"	1126
	S2	24	6	1	6'-10"	246
	S3	14	4	2	8'-5"	79
	S4	84	4	3	3'-0"	168
	S5	1	5	2	9'-10"	10
EXTERIOR GDR.	S6	182	5	4	4'-4"	823
INTERIOR GDR.	S6	182	5	4	4'-4"	823
	✳ S7	10	5	STR	3'-8"	38
	S8	2	5	2	9'-0"	19
	S9	48	5	STR	3'-3"	163
	S10	1	3	STR	1'-10"	1
EXTERIOR GDR.	S11	8	5	2	11'-8"	97
INTERIOR GDR.	S11	16	5	2	11'-8"	195
EXTERIOR GDR.	S12	16	4	STR	8'-0"	86
INTERIOR GDR.	S13	16	4	STR	15'-5"	165

✳ NOTE: S7 BARS SHALL BE BENT BEFORE SHIPMENT. HEAT BENDING SHALL NOT BE ALLOWED.

BAR TYPES

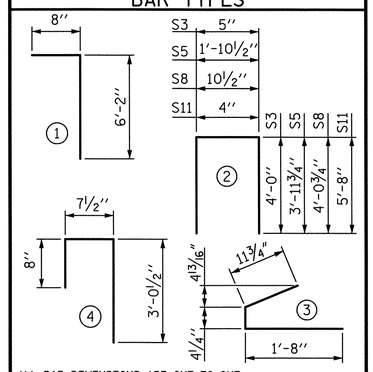

ALL BAR DIMENSIONS ARE OUT-TO-OUT

QUANTITIES FOR ONE GIRDER

	REINFORCING STEEL	8000 PSI CONCRETE	0.6" Ø L.R. STRANDS
	LB.	C.Y.	No.
EXTERIOR GIRDER	2856	25.2	42
INTERIOR GIRDER	3033	25.2	42

GIRDERS REQUIRED

NUMBER	LENGTH	TOTAL LENGTH
8	117'-5"	939'-4"

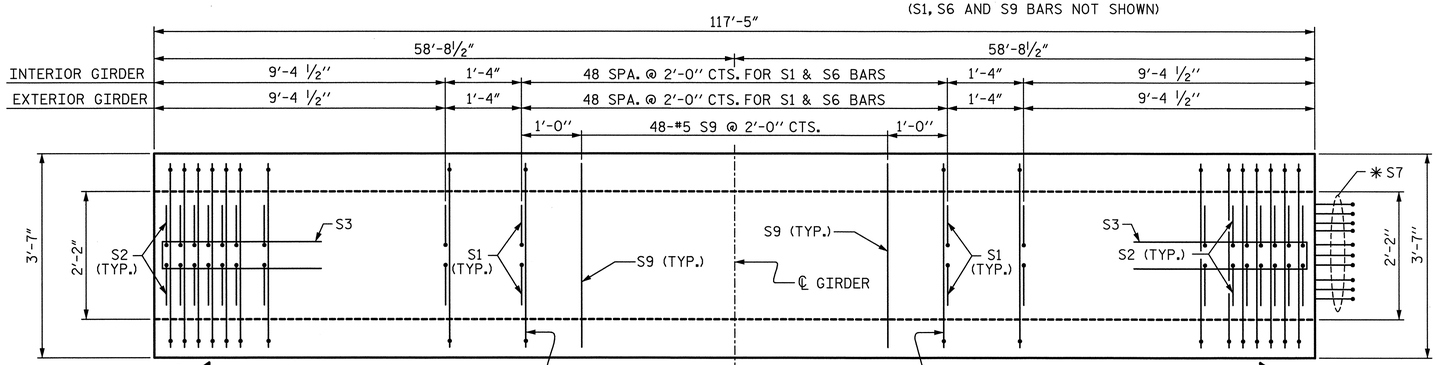

PLAN OF GIRDER

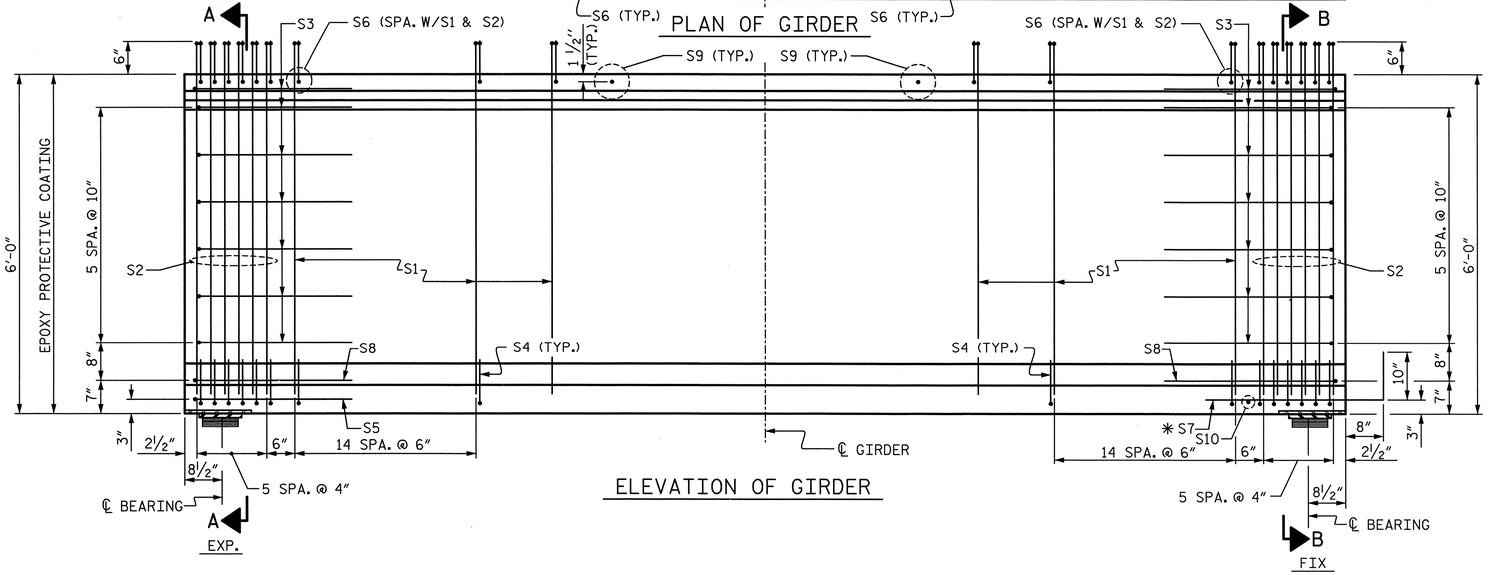

ELEVATION OF GIRDER

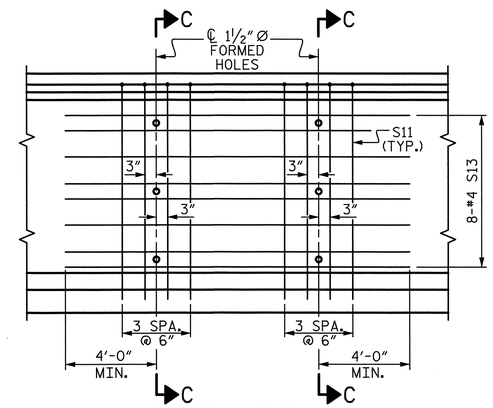

PARTIAL ELEVATION

SHOWING INTERMEDIATE STEEL DIAPHRAGM REINFORCING STEEL FOR INTERIOR GIRDERS.

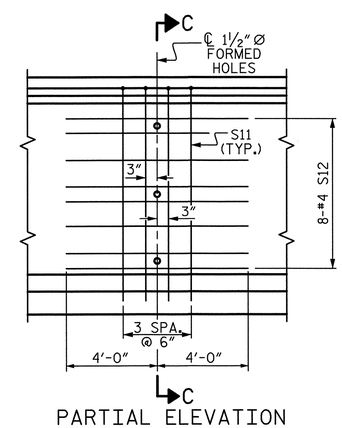

PARTIAL ELEVATION

SHOWING INTERMEDIATE STEEL DIAPHRAGM REINFORCING STEEL FOR EXTERIOR GIRDERS.

PLANS PREPARED BY:

SIMPSON ENGINEERS & ASSOCIATES

5640 Dillard Drive
Suite 200
Cary, NC 27518
(919) 852-0468
(919) 852-0598 (Fax)
www.simpsonengr.com

LICENSURE NO. C2521

NORTH CAROLINA PROFESSIONAL SEAL 023906 ENGINEER MARK A. AVERETTE
6-5-2013

PROJECT NO. U-2524C

GUILFORD COUNTY

STATION: 9+75.28 -RPDY4-

SHEET 1 OF 3

STATE OF NORTH CAROLINA
DEPARTMENT OF TRANSPORTATION
RALEIGH

SUPERSTRUCTURE
72" PRESTRESSED CONCRETE MODIFIED BULB TEE CONTINUOUS FOR LIVE LOAD
(2 SPAN CONTINUOUS UNIT 2)
(SPANS 3 & 4)
-RAMP D-

REVISIONS						SHEET NO.
NO.	BY:	DATE:	NO.	BY:	DATE:	S-796
1			3			TOTAL SHEETS
2			4			836

DRAWN BY: T. BANKOVICH DATE: 4-13
CHECKED BY: M. AVERETTE DATE: 4-13
DESIGN ENGINEER OF RECORD: M. AVERETTE DATE: 4-13

6/5/2013 2:37:50 PM G:\Projects\2011\U-2524 (Guilford Co)\Structures\Ramp D\Drawings\Final\U-2524_sd_rpd_pcg.dgn

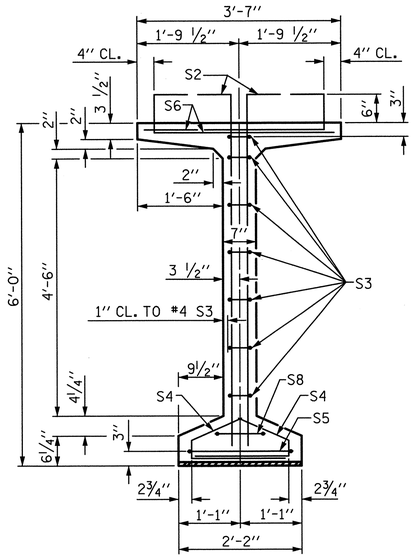

SECTION A-A

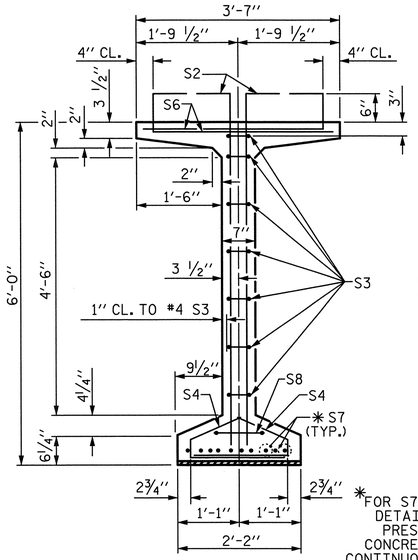

SECTION B-B

✳FOR S7 BARS. SEE DETAIL "C" OF PRESTRESSED CONCRETE GIRDER CONTINUOUS FOR LIVE LOAD DETAILS SHEET

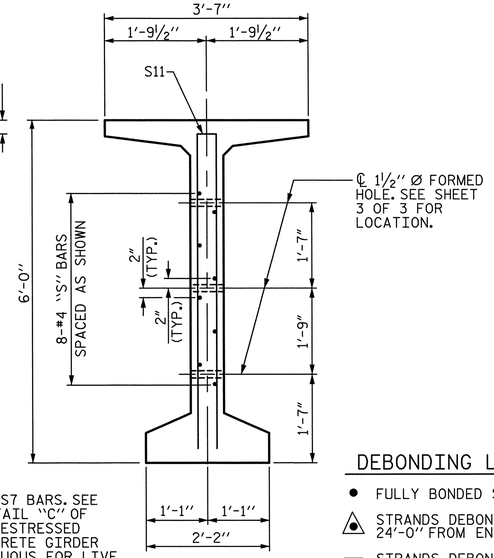

SECTION C-C

(S1, S6 AND S9 BARS NOT SHOWN)

DEBONDING LEGEND

- ● FULLY BONDED STRANDS
- ◬ STRANDS DEBONDED FOR 24'-0" FROM END OF GIRDER
- ⊡ STRANDS DEBONDED FOR 6'-0" FROM END OF GIRDER

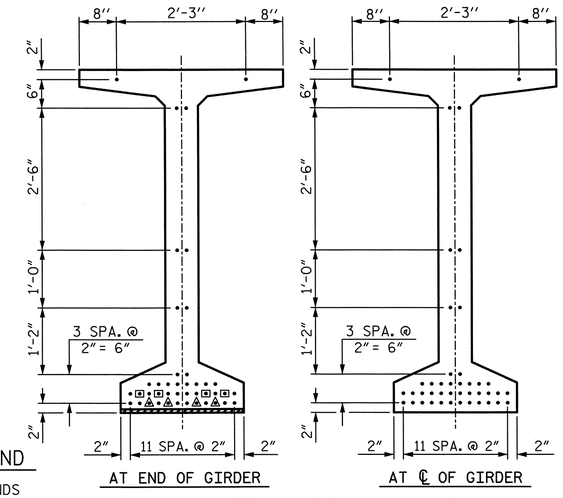

0.6" Ø LOW RELAXATION STRAND LAYOUT

0.6" Ø L. R. GRADE 270 STRANDS		
AREA (SQUARE INCHES)	ULTIMATE STRENGTH (LBS. PER STRAND)	APPLIED PRESTRESS (LBS. PER STRAND)
0.217	58,600	43,950

REINFORCING STEEL FOR ONE GDR

	BAR	NUMBER	SIZE	TYPE	LENGTH	WEIGHT
EXTERIOR GDR.	S1	158	5	1	6'-10"	1126
INTERIOR GDR.	S1	158	5	1	6'-10"	1126
	S2	24	6	1	6'-10"	246
	S3	14	4	2	8'-5"	79
	S4	84	4	3	3'-0"	168
SPAN 5 & 7	S5	1	5	2	9'-10"	10
EXTERIOR GDR.	S6	182	5	4	4'-4"	823
INTERIOR GDR.	S6	182	5	4	4'-4"	823
SPAN 5 & 7	✳ S7	10	5	STR	3'-8"	38
SPAN 6	✳ S7	20	5	STR	3'-8"	76
	S8	2	5	2	9'-0"	19
	S9	48	5	STR	3'-3"	163
SPAN 5 & 7	S10	1	3	STR	1'-10"	1
SPAN 6	S10	2	3	STR	1'-10"	1
EXTERIOR GDR.	S11	8	5	2	11'-8"	97
INTERIOR GDR.	S11	16	5	2	11'-8"	195
EXTERIOR GDR.	S12	16	4	STR	8'-0"	86
INTERIOR GDR.	S13	16	4	STR	15'-5"	165

✳NOTE: S7 BARS SHALL BE BENT BEFORE SHIPMENT. HEAT BENDING SHALL NOT BE ALLOWED.

BAR TYPES

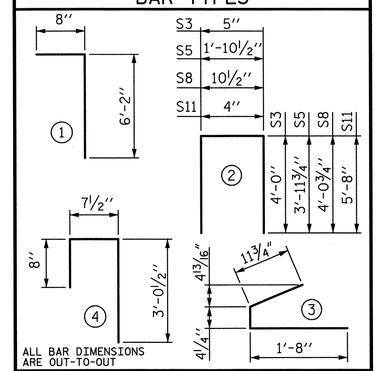

QUANTITIES FOR ONE GIRDER

		REINFORCING STEEL	8000 PSI CONCRETE	0.6" Ø L.R. STRANDS
		LB.	C.Y.	No.
SPAN 5 & 7	EXTERIOR GIRDER	2856	25.2	42
SPAN 5 & 7	INTERIOR GIRDER	3033	25.2	42
SPAN 6	EXTERIOR GIRDER	2884	25.2	42
SPAN 6	INTERIOR GIRDER	3061	25.2	42

GIRDERS REQUIRED

NUMBER	LENGTH	TOTAL LENGTH
12	117'-5"	1409'-0"

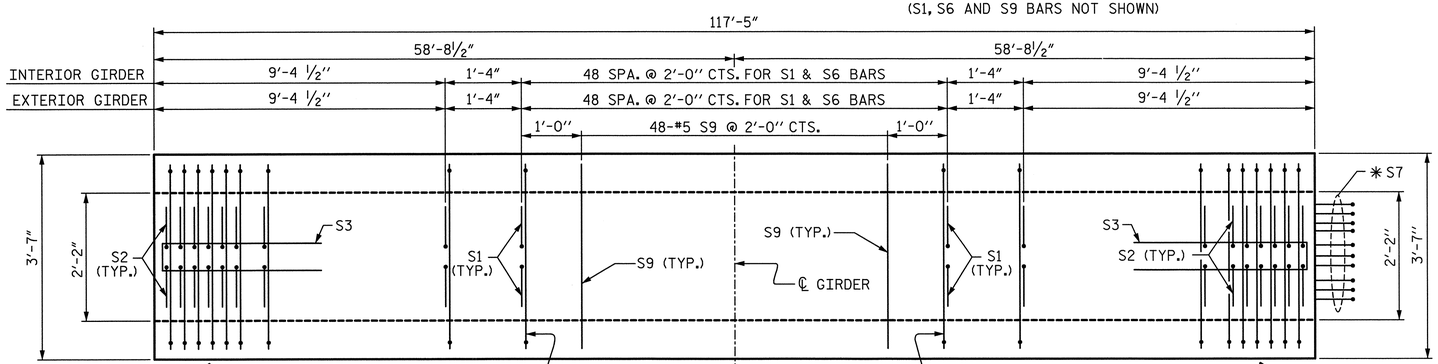

PLAN OF GIRDER

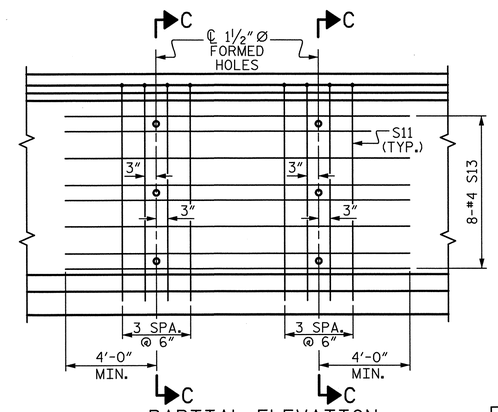

PARTIAL ELEVATION

SHOWING INTERMEDIATE STEEL DIAPHRAGM REINFORCING STEEL FOR INTERIOR GIRDERS.

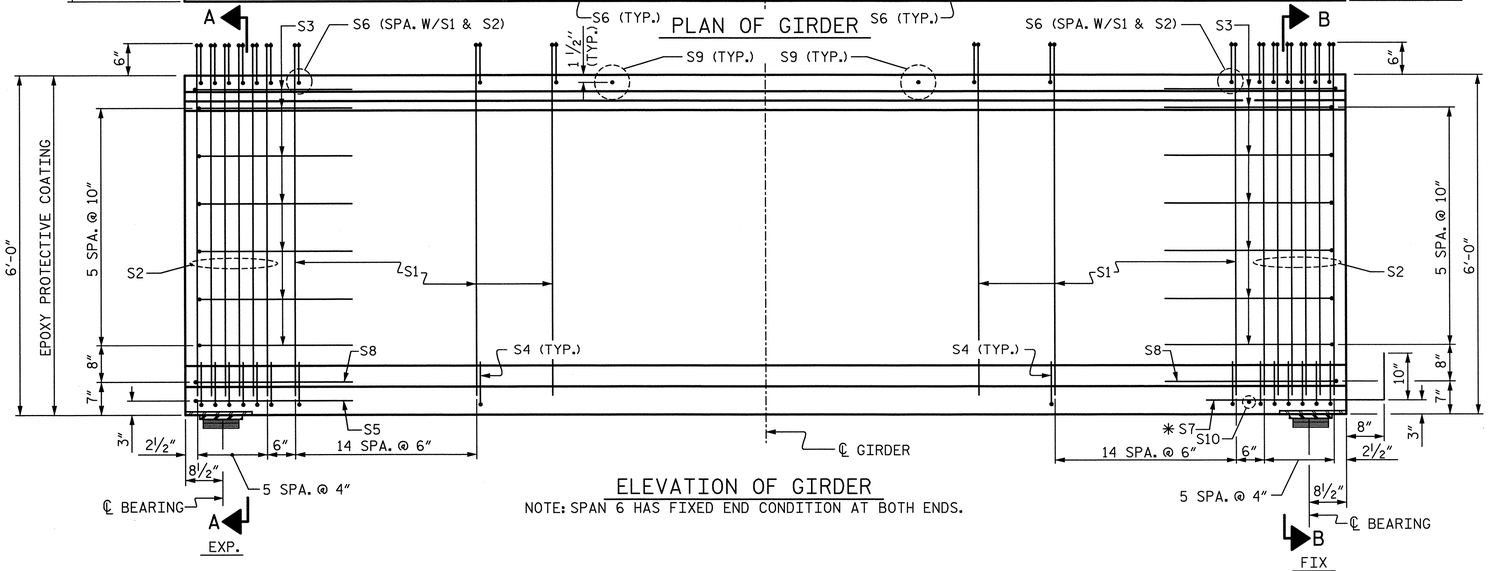

ELEVATION OF GIRDER

NOTE: SPAN 6 HAS FIXED END CONDITION AT BOTH ENDS.

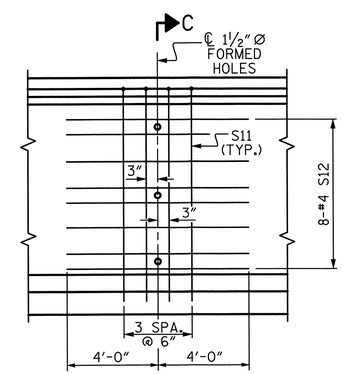

PARTIAL ELEVATION

SHOWING INTERMEDIATE STEEL DIAPHRAGM REINFORCING STEEL FOR EXTERIOR GIRDERS.

PLANS PREPARED BY:

SIMPSON ENGINEERS & ASSOCIATES

5640 Dillard Drive
Suite 200
Cary, NC 27518
(919) 852-0468
(919) 852-0598 (Fax)
www.simpsonengr.com

LICENSURE NO. C2521

NORTH CAROLINA PROFESSIONAL SEAL 023906 ENGINEER MARK A. AVERETTE

6-5-2013

PROJECT NO. U-2524C

GUILFORD COUNTY

STATION: 9+75.28 -RPDY4-

SHEET 2 OF 3

STATE OF NORTH CAROLINA
DEPARTMENT OF TRANSPORTATION
RALEIGH

SUPERSTRUCTURE
72" PRESTRESSED CONCRETE MODIFIED BULB TEE CONTINUOUS FOR LIVE LOAD
(3 SPAN CONTINUOUS UNIT 3)
(SPANS 5, 6, & 7)
-RAMP D-

REVISIONS							SHEET NO.
NO.	BY:	DATE:	NO.	BY:	DATE:		S-797
1			3				TOTAL SHEETS
2			4				836

DRAWN BY: T. BANKOVICH DATE: 4-13
CHECKED BY: M. AVERETTE DATE: 4-13
DESIGN ENGINEER OF RECORD: M. AVERETTE DATE: 4-13

6/5/2013 2:37:55 PM G:\Projects\2011\U-2524 (Guilford Co)\Structures\Ramp D\Drawings\Final\U-2524_sd_rpd_pcg.dgn

NOTES:

ALL PRESTRESSING STRANDS SHALL BE 7-WIRE LOW-RELAXATION GRADE 270 STRANDS AND SHALL CONFORM TO AASHTO M203 EXCEPT FOR SAMPLING REQUIREMENTS WHICH SHALL BE IN ACCORDANCE WITH THE STANDARD SPECIFICATIONS.

ALL REINFORCING STEEL SHALL BE GRADE 60.

APPLY EPOXY PROTECTIVE COATING TO END OF GIRDER SURFACES INDICATED IN ELEVATION VIEW.

EMBEDDED PLATE "B-1" SHALL BE GALVANIZED IN ACCORDANCE WITH THE STANDARD SPECIFICATIONS. BEVEL EDGES OF PLATE "B-1" TO GIVE CLOSE FIT BUT NOT TIGHT FIT TO STEEL CASTING FORM.

ANCHOR STUDS SHALL CONFORM TO AASHTO M169 GRADES 1010 THROUGH 1020 OR APPROVED EQUAL, AND SHALL MEET THE TYPE "B" REQUIREMENTS OF SUBSECTION 7.3 OF THE ANSI/AASHTO/AWS D1.5 BRIDGE WELDING CODE.

AT ENDS OF GIRDERS TO BE EMBEDDED IN CONCRETE DIAPHRAGMS OR END WALLS, PRESTRESSING STRANDS MAY EXTEND A MAXIMUM OF 2" BEYOND THE GIRDER ENDS. OTHERWISE, PRESTRESSING STRANDS SHALL BE CUT FLUSH WITH THE GIRDER ENDS.

THE TRANSFER OF LOAD FROM THE ANCHORAGES TO THE GIRDER SHALL BE DONE WHEN CONCRETE HAS REACHED A COMPRESSIVE STRENGTH OF NOT LESS THAN 6400 PSI.

DEPENDING ON THE TYPE OF SYSTEM USED TO SUPPORT THE DECK SLAB FORMS, PRESET ANCHORS MAY BE NECESSARY IN THE PRESTRESSED CONCRETE GIRDER.

THE TOP SURFACE OF THE GIRDER, EXCLUDING THE OUTSIDE 4", SHALL BE RAKED TO A DEPTH OF 1/4".

A 2" x 2" CHAMFER IS ALLOWED AT THE INTERSECTION OF THE WEB AND THE BOTTOM FLANGE.

THE CONTRACTOR HAS THE OPTION TO PROVIDE, AT NO ADDITIONAL COST TO THE DEPARTMENT, 2 ADDITIONAL STRANDS AT THE TOP OF THE GIRDER TO FACILITATE TYING OF THE REINFORCING STEEL. THESE STRANDS SHALL BE PULLED TO A LOAD OF 4500 lbs.

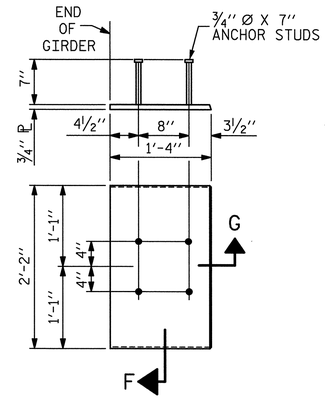

EMBEDDED PLATE "B-1" DETAILS FOR 72" MODIFIED BULD TEES

(2 REQ'D PER GIRDER)

GIRDER DIMENSIONS					
SPAN	GIRDER	"A"	"B"	"C"	"D"
3,4,5,6, & 7	GIRDER 1	39'-2"	39'-2"	N/A	N/A
	GIRDER 2	39'-2"	31'-9 7/8"	7'-4 1/8"	7'-4 1/8"
	GIRDER 3	39'-2"	31'-9 7/8"	7'-4 1/8"	7'-4 1/8"
	GIRDER 4	46'-6 1/8"	31'-9 7/8"	N/A	N/A

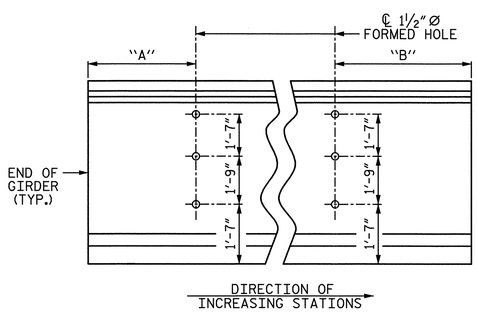

EXTERIOR GIRDERS

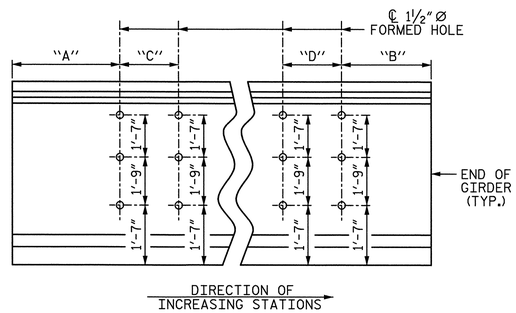

INTERIOR GIRDERS

LOCATION OF 1 1/2" Ø HOLES

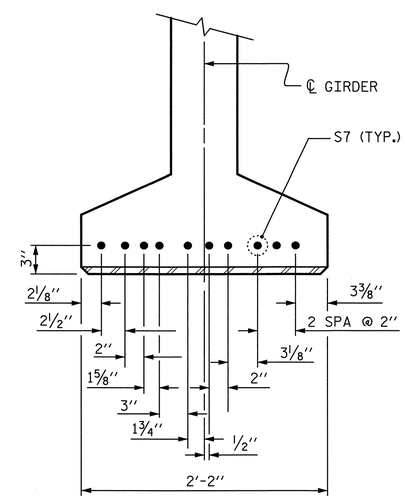

DETAIL "C"

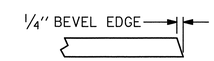

SECTION "G"

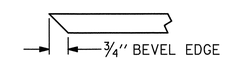

SECTION "F"

(SEE NOTES)

PROJECT NO. U-2524C

GUILFORD COUNTY

STATION: 9+75.28 -RPDY4-

SHEET 3 OF 3

STATE OF NORTH CAROLINA
DEPARTMENT OF TRANSPORTATION
RALEIGH

SUPERSTRUCTURE

72" PRESTRESSED CONCRETE MODIFIED BULB TEE CONTINUOUS FOR LIVE LOAD (DETAILS)
-RAMP D-

PLANS PREPARED BY:

SIMPSON ENGINEERS & ASSOCIATES
5640 Dillard Drive
Suite 200
Cary, NC 27518
(919) 852-0468
(919) 852-0598 (Fax)
www.simpsonengr.com
LICENSURE NO. C-2521

NORTH CAROLINA PROFESSIONAL SEAL 023908 ENGINEER MARK A. AVERETTE
6-5-2013

REVISIONS							
NO.	BY:	DATE:	NO.	BY:	DATE:	SHEET NO.	S-798
1			3			TOTAL SHEETS	836
2			4				

DRAWN BY: T. BANKOVICH DATE: 4-13
CHECKED BY: M. AVERETTE DATE: 4-13
DESIGN ENGINEER OF RECORD: M. AVERETTE DATE: 4-13

6/5/2013 2:37:59 PM G:\Projects\2011\U-2524 (Guilford Co)\Structures\Ramp D\Drawings\Final\U-2524_sd_rpd_pcg.dgn

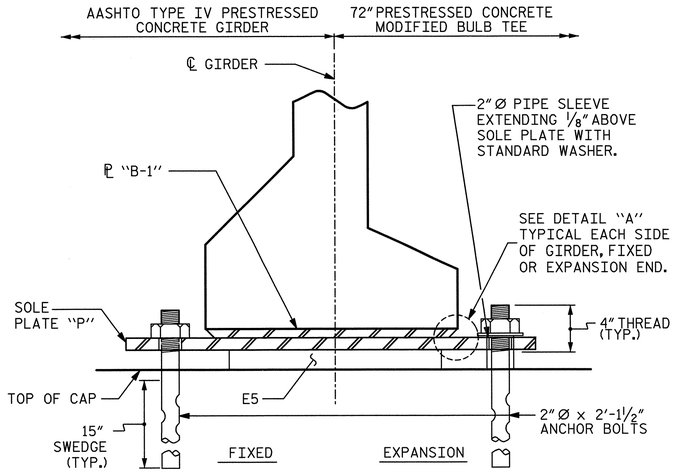

SECTION E-E

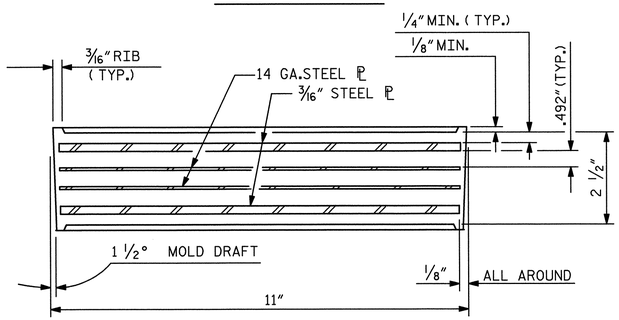

TYPICAL SECTION OF ELASTOMERIC BEARINGS

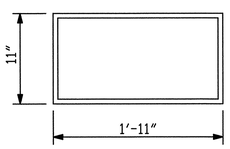

E5 (56 REQ'D)

PLAN VIEW OF ELASTOMERIC BEARING

TYPE VI

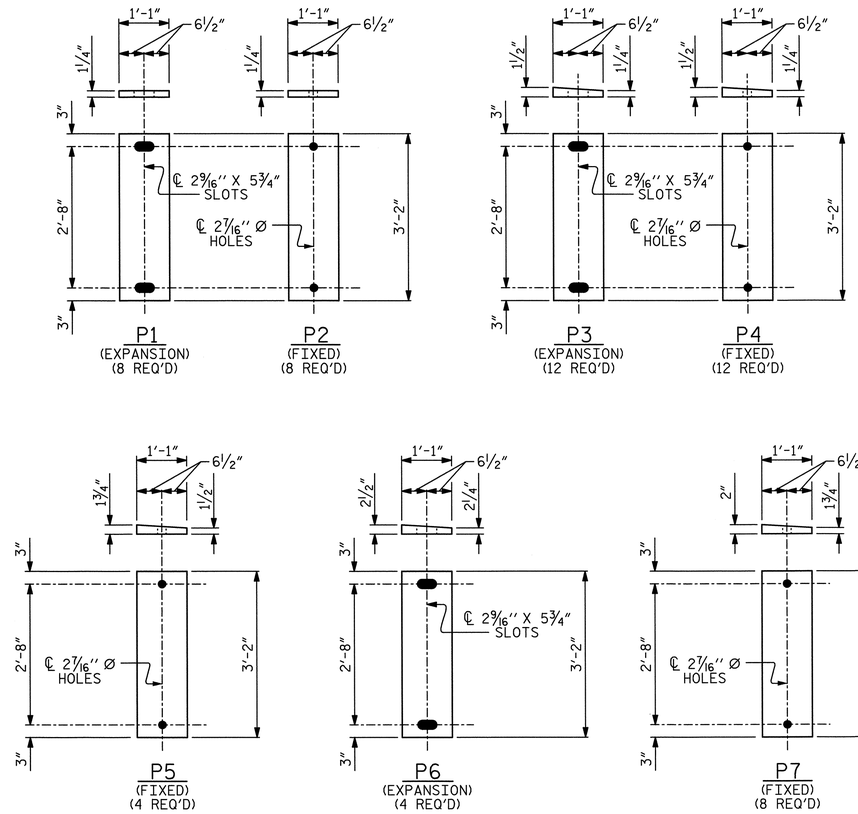

SOLE PLATE DETAILS ("P")

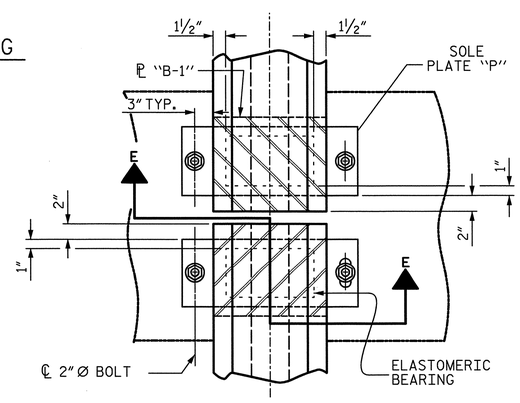

TYPICAL HALF-PLAN (SHOWING CONTINUOUS BENT)

TYPICAL HALF-PLAN (SHOWING SIMPLE BENT)

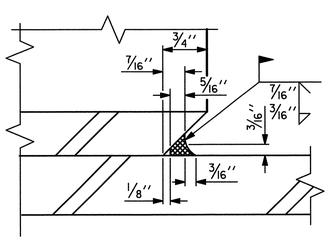

DETAIL "A"

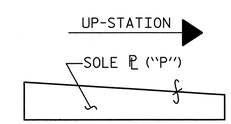

SOLE ℗ PLACEMENT DETAIL

MAXIMUM ALLOWABLE SERVICE LOADS	
D.L.+L.L. (NO IMPACT)	
TYPE VI	395 k

NOTES:

AT ALL FIXED POINTS OF SUPPORT, NUTS FOR ANCHOR BOLTS ARE TO BE TIGHTENED FINGER TIGHT AND THEN BACKED OFF 1/2 TURN. THE THREAD OF THE NUT AND BOLT SHALL THEN BE BURRED WITH A SHARP POINTED TOOL.

THE 2" Ø PIPE SLEEVE SHALL BE CUT FROM SCHEDULE 40 PVC PLASTIC PIPE. THE PVC PLASTIC PIPE SHALL MEET THE REQUIREMENTS OF ASTM D1785.

STEEL SOLE PLATES, ANCHOR BOLTS, NUTS, AND WASHERS SHALL BE GALVANIZED IN ACCORDANCE WITH THE STANDARD SPECIFICATIONS.

PRIOR TO WELDING, GRIND THE GALVANIZED SURFACE OF THE PORTION OF THE EMBEDDED PLATE AND SOLE PLATE THAT ARE TO BE WELDED. AFTER WELDING, DAMAGED GALVANIZED SURFACES SHALL BE REPAIRED IN ACCORDANCE WITH THE STANDARD SPECIFICATIONS.

WHEN WELDING THE SOLE PLATE TO THE EMBEDDED PLATE IN THE GIRDER, USE TEMPERATURE INDICATING WAX PENS, OR OTHER SUITABLE MEANS, TO ENSURE THAT THE TEMPERATURE OF THE SOLE PLATE DOES NOT EXCEED 300°F. TEMPERATURES ABOVE THIS MAY DAMAGE THE ELASTOMER.

SOLE PLATE "P", BOLTS, NUTS, WASHERS, AND PIPE SLEEVE SHALL BE INCLUDED IN THE PAY ITEM FOR PRESTRESSED CONCRETE GIRDERS.

ANCHOR BOLTS SHALL MEET THE REQUIREMENTS OF ASTM A449. NUTS SHALL MEET THE REQUIREMENTS OF AASHTO M291-DH OR AASHTO M292-2H. WASHERS SHALL MEET THE REQUIREMENTS OF AASHTO M293. NO SHOP DRAWINGS ARE REQUIRED FOR ANCHOR BOLTS, NUTS AND WASHERS. SHOP INSPECTION IS REQUIRED.

ALL SURFACES OF BEARING PLATES SHALL BE SMOOTH AND STRAIGHT.

THE ELASTOMER IN THE STEEL REINFORCED BEARINGS SHALL HAVE A SHEAR MODULUS OF 0.160 KSI, IN ACCORDANCE WITH AASHTO M251.

FOR STEEL REINFORCED ELASTOMERIC BEARINGS, SEE SPECIAL PROVISIONS.

PROJECT NO. U-2524C
GUILFORD COUNTY
STATION: 9+75.28 -RPDY4-

STATE OF NORTH CAROLINA
DEPARTMENT OF TRANSPORTATION
RALEIGH
SUPERSTRUCTURE

ELASTOMERIC BEARING DETAILS

-RAMP D-

PLANS PREPARED BY:
SIMPSON ENGINEERS & ASSOCIATES
5640 Dillard Drive
Suite 200
Cary, NC 27518
(919) 852-0468
(919) 852-0598 (Fax)
www.simpsonengr.com
LICENSURE NO. C-2521

NORTH CAROLINA PROFESSIONAL SEAL 023906 ENGINEER MARK A. AVERETTE
6-5-2013

REVISIONS						SHEET NO.
NO.	BY:	DATE:	NO.	BY:	DATE:	S-799
1			3			TOTAL SHEETS
2			4			836

DRAWN BY: J. SIMPSON DATE: 4-13
CHECKED BY: M. AVERETTE DATE: 4-13
DESIGN ENGINEER OF RECORD: M. AVERETTE DATE: 4-13

6/5/2013 2:38:04 PM G:\Projects\2011\U-2524 (Guilford Co)\Structures\Ramp D\Drawings\Final\U-2524_sd_rpd_bg.dgn

DEAD LOAD DEFLECTION TABLE FOR GIRDERS

	SPAN 1										
0.6″ Ø LOW RELAXATION	GIRDER 1G1										
TENTH POINTS	0	.1	.2	.3	.4	.5	.6	.7	.8	.9	1.0
CAMBER (GIRDER ALONE IN PLACE) ↑	0	0.091	0.161	0.209	0.236	0.245	0.236	0.209	0.161	0.091	0
✳ DEFLECTION DUE TO SUPERIMPOSED D.L. ↓	0	0.041	0.079	0.108	0.127	0.134	0.127	0.108	0.079	0.041	0
FINAL CAMBER ↑	0	5/8″	1″	1 3/16″	1 5/16″	1 5/16″	1 5/16″	1 3/16″	1″	5/8″	0
0.6″ Ø LOW RELAXATION	GIRDERS 1G2 & 1G3										
TENTH POINTS	0	.1	.2	.3	.4	.5	.6	.7	.8	.9	1.0
CAMBER (GIRDER ALONE IN PLACE) ↑	0	0.090	0.160	0.207	0.234	0.243	0.234	0.207	0.160	0.090	0
✳ DEFLECTION DUE TO SUPERIMPOSED D.L. ↓	0	0.041	0.078	0.107	0.126	0.133	0.126	0.108	0.078	0.041	0
FINAL CAMBER ↑	0	5/8″	1″	1 3/16″	1 5/16″	1 5/16″	1 5/16″	1 3/16″	1″	5/8″	0
0.6″ Ø LOW RELAXATION	GIRDER 1G4										
TENTH POINTS	0	.1	.2	.3	.4	.5	.6	.7	.8	.9	1.0
CAMBER (GIRDER ALONE IN PLACE) ↑	0	0.089	0.157	0.204	0.231	0.240	0.231	0.204	0.157	0.089	0
✳ DEFLECTION DUE TO SUPERIMPOSED D.L. ↓	0	0.037	0.071	0.098	0.115	0.121	0.115	0.098	0.071	0.037	0
FINAL CAMBER ↑	0	5/8″	1″	1 1/4″	1 3/8″	1 7/16″	1 3/8″	1 1/4″	1″	5/8″	0

✳ INCLUDES FUTURE WEARING SURFACE
ALL VALUES ARE SHOWN IN FEET (DECIMAL FORM), EXCEPT "FINAL CAMBER", WHICH IS GIVEN IN INCHES (FRACTION FORM).

DEAD LOAD DEFLECTION TABLE FOR GIRDERS

	SPAN 2										
0.6″ Ø LOW RELAXATION	GIRDER 2G1										
TENTH POINTS	0	.1	.2	.3	.4	.5	.6	.7	.8	.9	1.0
CAMBER (GIRDER ALONE IN PLACE) ↑	0	0.091	0.161	0.209	0.236	0.245	0.236	0.209	0.161	0.091	0
✳ DEFLECTION DUE TO SUPERIMPOSED D.L. ↓	0	0.041	0.081	0.112	0.132	0.138	0.132	0.113	0.082	0.043	0
FINAL CAMBER ↑	0	5/8″	15/16″	1 3/16″	1 1/4″	1 1/4″	1 1/4″	1 1/8″	15/16″	9/16″	0
0.6″ Ø LOW RELAXATION	GIRDERS 2G2 & 2G3										
TENTH POINTS	0	.1	.2	.3	.4	.5	.6	.7	.8	.9	1.0
CAMBER (GIRDER ALONE IN PLACE) ↑	0	0.090	0.160	0.207	0.234	0.243	0.234	0.207	0.160	0.090	0
✳ DEFLECTION DUE TO SUPERIMPOSED D.L. ↓	0	0.043	0.084	0.116	0.136	0.144	0.137	0.117	0.085	0.044	0
FINAL CAMBER ↑	0	9/16″	15/16″	1 1/8″	1 3/16″	1 3/16″	1 3/16″	1 1/16″	7/8″	9/16″	0
0.6″ Ø LOW RELAXATION	GIRDER 2G4										
TENTH POINTS	0	.1	.2	.3	.4	.5	.6	.7	.8	.9	1.0
CAMBER (GIRDER ALONE IN PLACE) ↑	0	0.089	0.158	0.205	0.231	0.240	0.231	0.205	0.158	0.089	0
✳ DEFLECTION DUE TO SUPERIMPOSED D.L. ↓	0	0.037	0.073	0.101	0.118	0.125	0.119	0.102	0.074	0.039	0
FINAL CAMBER ↑	0	5/8″	1″	1 1/4″	1 3/8″	1 3/8″	1 3/8″	1 1/4″	1″	5/8″	0

✳ INCLUDES FUTURE WEARING SURFACE
ALL VALUES ARE SHOWN IN FEET (DECIMAL FORM), EXCEPT "FINAL CAMBER", WHICH IS GIVEN IN INCHES (FRACTION FORM).

PROJECT NO. U-2524C
GUILFORD COUNTY
STATION: 9+75.28 -RPDY4-

SHEET 1 OF 2

STATE OF NORTH CAROLINA
DEPARTMENT OF TRANSPORTATION
RALEIGH

SUPERSTRUCTURE
DEAD LOAD DEFLECTION AND GIRDER CAMBER
(2 SPAN CONTINUOUS UNIT 1)
(SPANS 1 & 2)
-RAMP D-

PLANS PREPARED BY:
SIMPSON ENGINEERS & ASSOCIATES
5640 Dillard Drive
Suite 200
Cary, NC 27518
(919) 852-0468
(919) 852-0598 (Fax)
www.simpsonengr.com
LICENSURE NO. C-2521

NORTH CAROLINA PROFESSIONAL SEAL 023906 ENGINEER MARK A. AVERETTE
6-5-2013

REVISIONS						SHEET NO.
NO.	BY:	DATE:	NO.	BY:	DATE:	S-800
1			3			TOTAL SHEETS
2			4			836

DRAWN BY: T. BANKOVICH DATE: 4-13
CHECKED BY: M. AVERETTE DATE: 4-13
DESIGN ENGINEER OF RECORD: M. AVERETTE DATE: 4-13

6/5/2013 2:38:08 PM G:\Projects\2011\U-2524 (Guilford Co)\Structures\Ramp D\Drawings\Final\U-2524_sd_rpd_dl.dgn

DEAD LOAD DEFLECTION TABLE FOR GIRDERS

SPANS 3, 4. 5. 6. & 7

0.6" Ø LOW RELAXATION — GIRDERS 3G1, 4G1. 5G1. 6G1, 7G2

TWENTIETH POINTS	0	.05	.10	.15	.20	.25	.30	.35	.40	.45	.50	.55	.60	.65	.70	.75	.80	.85	.90	.95	1.0
CAMBER (GIRDER ALONE IN PLACE) ↑	0	0.071	0.136	0.192	0.239	0.279	0.312	0.336	0.354	0.364	0.367	0.364	0.354	0.336	0.312	0.279	0.239	0.192	0.136	0.071	0
* DEFLECTION DUE TO SUPERIMPOSED D.L. ↓	0	0.026	0.056	0.084	0.109	0.132	0.151	0.166	0.178	0.184	0.187	0.184	0.178	0.166	0.151	0.132	0.109	0.084	0.056	0.026	0
FINAL CAMBER ↑	0	9/16"	15/16"	1 5/16"	1 9/16"	1 3/4"	1 15/16"	2 1/16"	2 1/8"	2 3/16"	2 3/16"	2 3/16"	2 1/8"	2 1/16"	1 15/16"	1 3/4"	1 9/16"	1 5/16"	15/16"	9/16"	0

0.6" Ø LOW RELAXATION — GIRDERS 3G2, 3G3, 4G2, 4G3, 5G2, 5G3, 6G2, 6G3, 7G2, & 7G3

TWENTIETH POINTS	0	.05	.10	.15	.20	.25	.30	.35	.40	.45	.50	.55	.60	.65	.70	.75	.80	.85	.90	.95	1.0
CAMBER (GIRDER ALONE IN PLACE) ↑	0	0.071	0.136	0.192	0.239	0.279	0.312	0.336	0.354	0.364	0.367	0.364	0.354	0.336	0.312	0.279	0.239	0.192	0.136	0.071	0
* DEFLECTION DUE TO SUPERIMPOSED D.L. ↓	0	0.025	0.054	0.080	0.105	0.127	0.145	0.160	0.171	0.177	0.179	0.177	0.171	0.160	0.145	0.127	0.105	0.080	0.054	0.025	0
FINAL CAMBER ↑	0	9/16"	1"	1 5/16"	1 5/8"	1 13/16"	2"	2 1/8"	2 3/16"	2 1/4"	2 1/4"	2 1/4"	2 3/16"	2 1/8"	2"	1 13/16"	1 5/8"	1 5/16"	1"	9/16"	0

0.6" Ø LOW RELAXATION — GIRDERS 3G4, 4G4, 5G4, 6G4, & 7G4

TWENTIETH POINTS	0	.05	.10	.15	.20	.25	.30	.35	.40	.45	.50	.55	.60	.65	.70	.75	.80	.85	.90	.95	1.0
CAMBER (GIRDER ALONE IN PLACE) ↑	0	0.071	0.136	0.192	0.239	0.279	0.312	0.336	0.354	0.364	0.367	0.364	0.354	0.336	0.312	0.279	0.239	0.192	0.136	0.071	0
* DEFLECTION DUE TO SUPERIMPOSED D.L. ↓	0	0.027	0.057	0.085	0.111	0.134	0.153	0.169	0.180	0.187	0.190	0.187	0.180	0.169	0.153	0.134	0.111	0.085	0.057	0.027	0
FINAL CAMBER ↑	0	1/2"	15/16"	1 1/4"	1 9/16"	1 3/4"	1 7/8"	2"	2 1/16"	2 1/8"	2 1/8"	2 1/8"	2 1/16"	2"	1 7/8"	1 3/4"	1 9/16"	1 1/4"	15/16"	1/2"	0

* INCLUDES FUTURE WEARING SURFACE
ALL VALUES ARE SHOWN IN FEET (DECIMAL FORM), EXCEPT "FINAL CAMBER", WHICH IS GIVEN IN INCHES (FRACTION FORM).

PROJECT NO. U-2524C
GUILFORD COUNTY
STATION: 9+75.28 -RPDY4-

SHEET 2 OF 2

STATE OF NORTH CAROLINA
DEPARTMENT OF TRANSPORTATION
RALEIGH

SUPERSTRUCTURE
DEAD LOAD DEFLECTION
AND GIRDER CAMBER
(2 SPAN CONTINUOUS UNIT 2 &
3 SPAN CONTINUOUS UNIT 3)
(SPANS 3, 4, 5, 6, & 7)
-RAMP D-

PLANS PREPARED BY:
SIMPSON ENGINEERS & ASSOCIATES
5640 Dillard Drive
Suite 200
Cary, NC 27518
(919) 852-0468
(919) 852-0598 (Fax)
www.simpsonengr.com
LICENSURE NO. C-2521

NORTH CAROLINA PROFESSIONAL ENGINEER SEAL 023906 MARK A. AVERETTE
6-5-2013

REVISIONS						SHEET NO.
NO.	BY:	DATE:	NO.	BY:	DATE:	S-801
1			3			TOTAL SHEETS
2			4			836

DRAWN BY: T. BANKOVICH DATE: 4-13
CHECKED BY: M. AVERETTE DATE: 4-13
DESIGN ENGINEER OF RECORD: M. AVERETTE DATE: 4-13

6/5/2013 2:38:13 PM G:\Projects\2011\U-2524 (Guilford Co)\Structures\Ramp D\Drawings\Final\U-2524_sd_rpd_dl.dgn

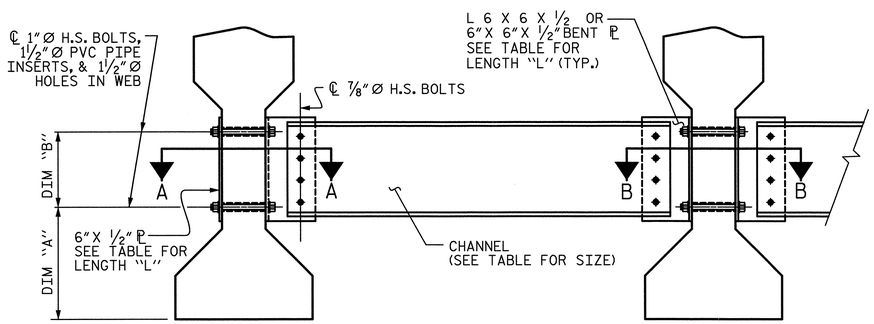

EXTERIOR GIRDER

INTERIOR GIRDER

PART SECTION AT INTERMEDIATE DIAPHRAGM

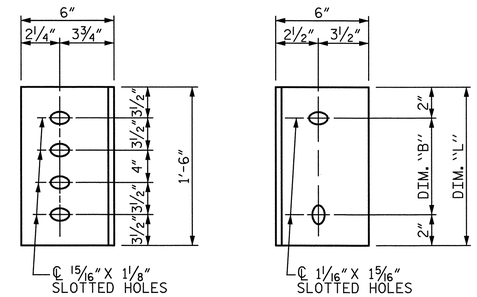

DIAPHRAGM FACE

WEB FACE

CONNECTOR PLATE DETAILS

STRUCTURAL STEEL NOTES:

ALL INTERMEDIATE DIAPHRAGM STEEL AND CONNECTOR PLATES SHALL BE AASHTO M270 GRADE 50 OR APPROVED EQUAL.

TENSION ON THE ASTM A325 BOLTS THROUGH THE CHANNEL MEMBER SHALL BE CALIBRATED USING DIRECT TENSION INDICATOR WASHERS IN ACCORDANCE WITH THE STANDARD SPECIFICATIONS.

TENSION ON THE ASTM A449 BOLTS THROUGH THE GIRDER WEB SHALL BE SNUG TIGHTENED FOLLOWED BY AN ADDITIONAL ¼ TURN.

THE PLATES, BENT PLATES, CHANNELS, AND ANGLES SHALL BE GALVANIZED OR METALLIZED IN ACCORDANCE WITH THE STANDARD SPECIFICATIONS. FOR THERMAL SPRAYED COATINGS (METALLIZATION), SEE SPECIAL PROVISIONS.

FOR METALLIZATION, APPLY AN 8 MIL THICK 99.99 PERCENT ZINC (W-Zn-1) THERMAL SPRAYED COATING WITH A 0.5 MIL THICK SEAL COAT TO ALL STEEL DIAPHRAGM SURFACES IN ACCORDANCE WITH THE THERMAL SPRAYED COATINGS SPECIAL PROVISION AND SECTION 442 OF THE STANDARD SPECIFICATIONS.

GALVANIZE THE HIGH STRENGTH BOLTS, NUTS, WASHERS AND DIRECT TENSION INDICATORS IN ACCORDANCE WITH THE STANDARD SPECIFICATIONS.

USE AN ASTM F436 HARDENED WASHER WITH STANDARD AND SLOTTED HOLES UNDER EACH BOLT HEAD AND NUT.

FOR BOLTS THROUGH THE GIRDER WEB, PROVIDE SUFFICIENT LENGTH OF THREADS ON ALL BOLTS TO ACCOMMODATE WASHERS AND THE THICKNESS OF CONNECTING MEMBER PLUS AT LEAST ¼"PROJECTION BEYOND THE NUT.

INTERMEDIATE DIAPHRAGM ASSEMBLY SHALL COMPLY WITH SECTION 1072 OF THE STANDARD SPECIFICATIONS.

SUBMIT TWO SETS OF WORKING DRAWINGS FOR THE INTERMEDIATE DIAPHRAGM ASSEMBLY FOR REVIEW, COMMENTS AND ACCEPTANCE. AFTER REVIEW, COMMENTS, AND ACCEPTANCE, SUBMIT SEVEN SETS FOR DISTRIBUTION.

IN THE EXTERIOR BAYS, PLACE TEMPORARY STRUTS BETWEEN PRESTRESSED GIRDERS ADJACENT TO THE STEEL DIAPHRAGMS. STRUTS SHALL REMAIN IN PLACE 3 DAYS AFTER CONCRETE IS PLACED.

THE COST OF THE STEEL DIAPHRAGMS AND ASSEMBLIES SHALL BE INCLUDED IN THE UNIT PRICE BID FOR PRESTRESSED CONCRETE GIRDERS.

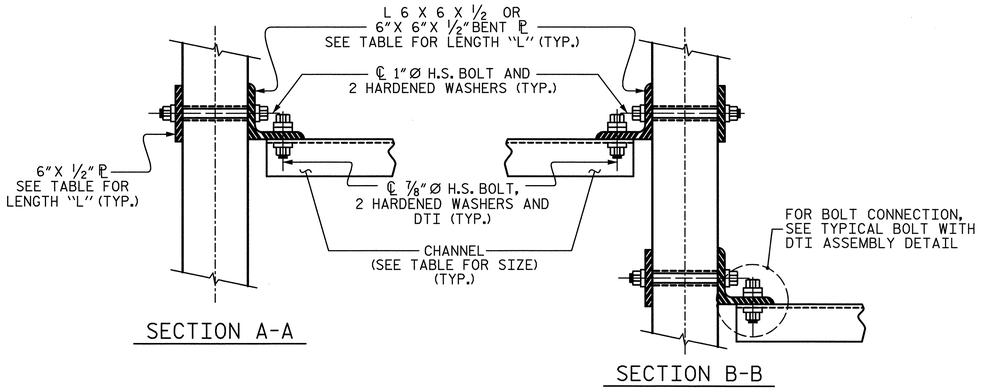

SECTION A-A

SECTION B-B

CONNECTION DETAILS

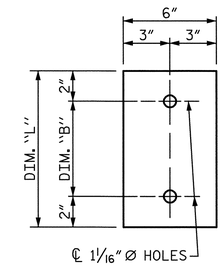

PLATE DETAILS

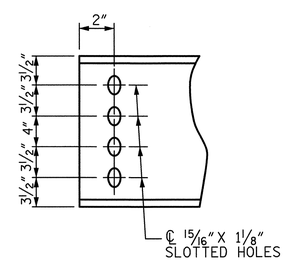

CHANNEL END

TABLE

GIRDER TYPE	CHANNEL SIZE	DIM "A"	DIM "B"	DIM "L"
IV	MC 18 x 42.7	1'-9½"	1'-2"	1'-6"

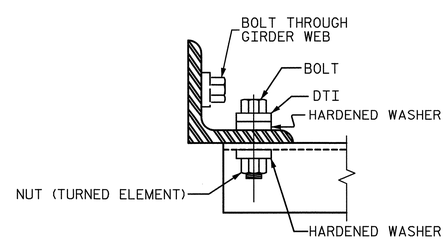

BOLT WITH DTI ASSEMBLY DETAIL

PROJECT NO. U-2524C

GUILFORD COUNTY

STATION: 9+75.28 -RPDY4-

STATE OF NORTH CAROLINA
DEPARTMENT OF TRANSPORTATION
RALEIGH

SUPERSTRUCTURE
INTERMEDIATE
STEEL DIAPHRAMS FOR
TYPE IV PRESTRESSED
CONCRETE GIRDERS
-RAMP D-

PLANS PREPARED BY:
SIMPSON ENGINEERS & ASSOCIATES
5640 Dillard Drive
Suite 200
Cary, NC 27518
(919) 852-0468
(919) 852-0598 (Fax)
www.simpsonengr.com
LICENSURE NO. C-2521

NORTH CAROLINA PROFESSIONAL SEAL 023908 ENGINEER MARK A. AVERETTE
6-5-2013

REVISIONS						SHEET NO.
NO.	BY:	DATE:	NO.	BY:	DATE:	S-802
1			3			TOTAL SHEETS
2			4			836

DRAWN BY: T. BANKOVICH DATE: 4-13
CHECKED BY: M. AVERETTE DATE: 4-13
DESIGN ENGINEER OF RECORD: M. AVERETTE DATE: 4-13

6/5/2013 2:38:17 PM G:\Projects\2011\U-2524 (Guilford Co)\Structures\Ramp D\Drawings\Final\U-2524_sd_rpd_pcg.dgn

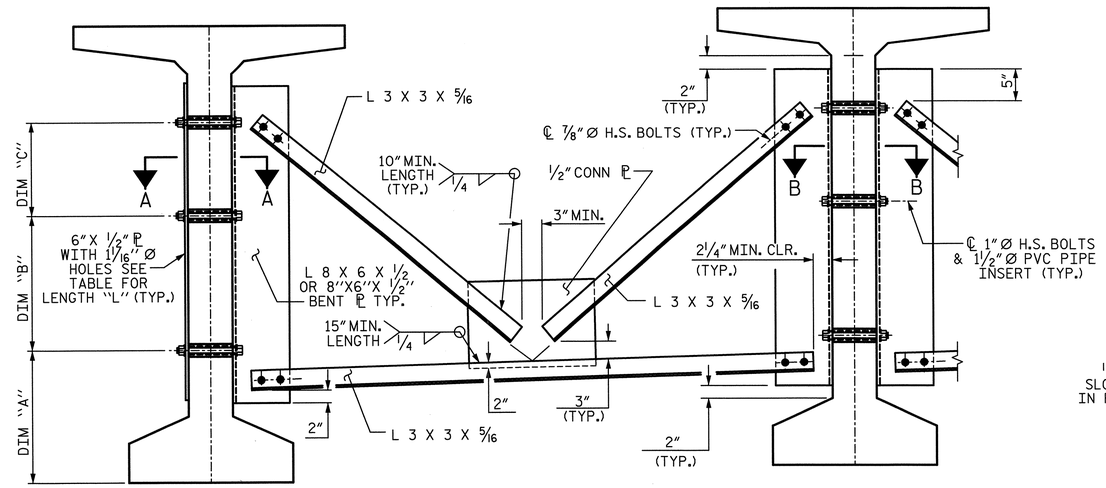

EXTERIOR GIRDER

INTERIOR GIRDER

PART SECTION AT INTERMEDIATE DIAPHRAGM

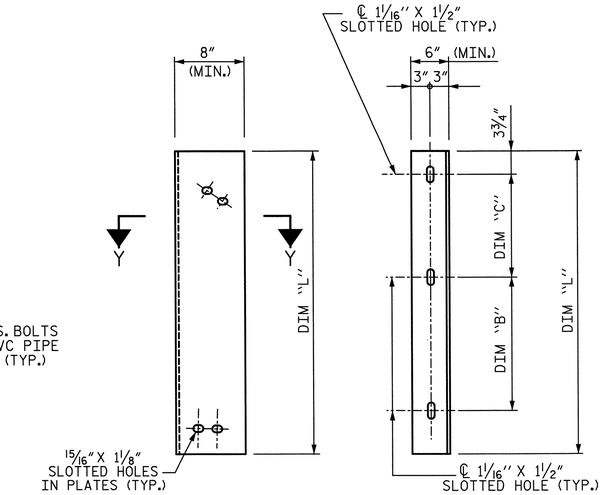

DIAPHRAGM FACE

WEB FACE

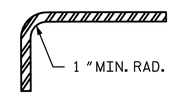

SECTION Y-Y

CONNECTOR PLATE DETAIL

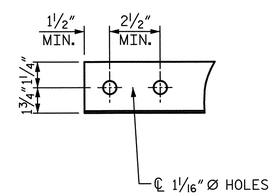

ANGLE END

(L 3 X 3 X 5/16)

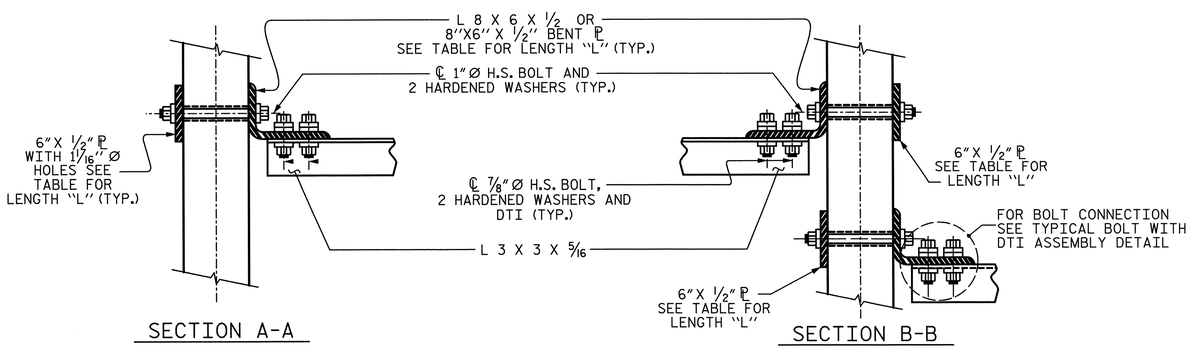

SECTION A-A

SECTION B-B

CONNECTION DETAILS

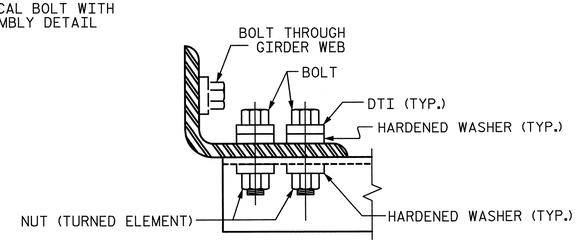

BOLT WITH DTI ASSEMBLY DETAIL

STRUCTURAL STEEL NOTES

ALL INTERMEDIATE DIAPHRAGM STEEL AND CONNECTOR PLATES SHALL BE AASHTO M270 GRADE 50 OR APPROVED EQUAL.

TENSION ON THE ASTM A325 BOLTS THROUGH THE ANGLE MEMBER SHALL BE CALIBRATED USING DIRECT TENSION INDICATOR WASHERS IN ACCORDANCE WITH THE STANDARD SPECIFICATIONS.

TENSION ON THE ASTM A449 BOLTS THROUGH THE GIRDER WEB SHALL BE SNUG TIGHTENED FOLLOWED BY AN ADDITIONAL 1/4 TURN.

THE PLATES, BENT PLATES, AND ANGLES SHALL BE GALVANIZED OR METALLIZED IN ACCORDANCE WITH THE STANDARD SPECIFICATIONS. FOR THERMAL SPRAYED COATINGS (METALLIZATION), SEE SPECIAL PROVISIONS.

FOR METALLIZATION, APPLY AN 8 MIL THICK 99.99 PERCENT ZINC (W-Zn-1) THERMAL SPRAYED COATING WITH A 0.5 MIL THICK SEAL COAT TO ALL STEEL DIAPHRAGM SURFACES IN ACCORDANCE WITH THE THERMAL SPRAYED COATINGS SPECIAL PROVISION AND SECTION 442 OF THE STANDARD SPECIFICATIONS.

GALVANIZE THE HIGH STRENGTH BOLTS, NUTS, WASHERS AND DIRECT TENSION INDICATORS IN ACCORDANCE WITH THE STANDARD SPECIFICATIONS.

USE AN ASTM F436 HARDENED WASHER WITH STANDARD AND SLOTTED HOLES UNDER EACH BOLT HEAD AND NUT.

FOR BOLTS THROUGH THE GIRDER WEB, PROVIDE SUFFICIENT LENGTH OF THREADS ON ALL BOLTS TO ACCOMMODATE WASHERS AND THE THICKNESS OF CONNECTING MEMBER PLUS AT LEAST 1/4" PROJECTION BEYOND THE NUT.

INTERMEDIATE DIAPHRAGM ASSEMBLY SHALL COMPLY WITH SECTION 1072 OF THE STANDARD SPECIFICATIONS.

SUBMIT TWO SETS OF WORKING DRAWINGS FOR THE INTERMEDIATE DIAPHRAGM ASSEMBLY FOR REVIEW, COMMENTS AND ACCEPTANCE. AFTER REVIEW, COMMENTS, AND ACCEPTANCE, SUBMIT SEVEN SETS FOR DISTRIBUTION.

IN THE EXTERIOR BAYS, PLACE TEMPORARY STRUTS BETWEEN PRESTRESSED GIRDERS ADJACENT TO THE STEEL DIAPHRAGMS. STRUTS SHALL REMAIN IN PLACE 3 DAYS AFTER CONCRETE IS PLACED.

THE COST OF THE STEEL DIAPHRAGMS AND ASSEMBLIES SHALL BE INCLUDED IN THE UNIT PRICE BID FOR PRESTRESSED CONCRETE GIRDERS.

TABLE

GIRDER TYPE	DIM "A"	DIM "B"	DIM "C"	DIM "L"
72" BULB TEE	1'-7"	1'-9"	1'-7"	4'-2"

PROJECT NO. U-2524C

GUILFORD COUNTY

STATION: 9+75.28 -RPDY4-

PLANS PREPARED BY:

SIMPSON ENGINEERS & ASSOCIATES

5640 Dillard Drive
Suite 200
Cary, NC 27518
(919) 852-0468
(919) 852-0598 (Fax)
www.simpsonengr.com

LICENSURE NO. C-2521

NORTH CAROLINA PROFESSIONAL SEAL 023908 ENGINEER MARK A. AVERETTE

6-5-2013

STATE OF NORTH CAROLINA
DEPARTMENT OF TRANSPORTATION
RALEIGH

SUPERSTRUCTURE

INTERMEDIATE STEEL DIAPHRAGM FOR 72" MODIFIED BULB TEE PRESTRESSED CONCRETE GIRDERS
-RAMP D-

REVISIONS							SHEET NO.
NO.	BY:	DATE:	NO.	BY:	DATE:		S-803
1			3				TOTAL SHEETS
2			4				836

DRAWN BY: T. BANKOVICH DATE: 4-13
CHECKED BY: M. AVERETTE DATE: 4-13
DESIGN ENGINEER OF RECORD: M. AVERETTE DATE: 4-13

6/5/2013 2:38:22 PM G:\Projects\2011\U-2524 (Guilford Co)\Structures\Ramp D\Drawings\Final\U-2524_sd_rpd_lsd.dgn

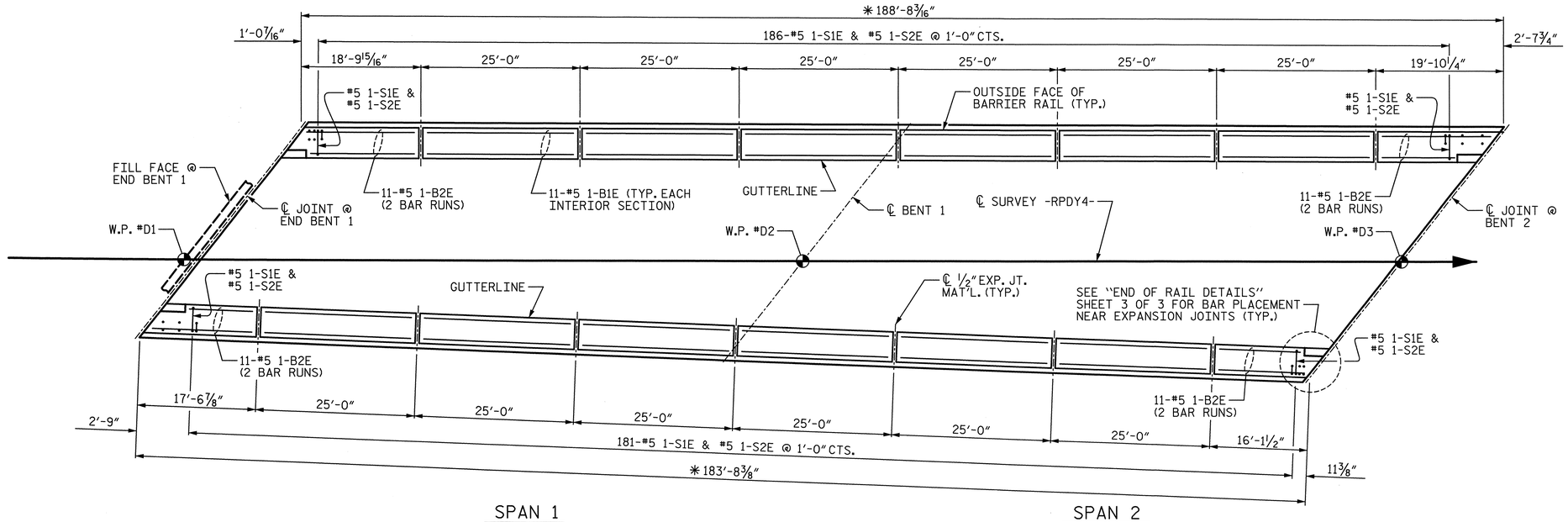

PLAN OF BARRIER RAIL - 2 SPAN CONTINUOUS UNIT 1

NOTE: ALL DIMENSION ARE MEASURED ALONG OUTSIDE FACE OF BARRIER RAIL
✱ @ 60° F

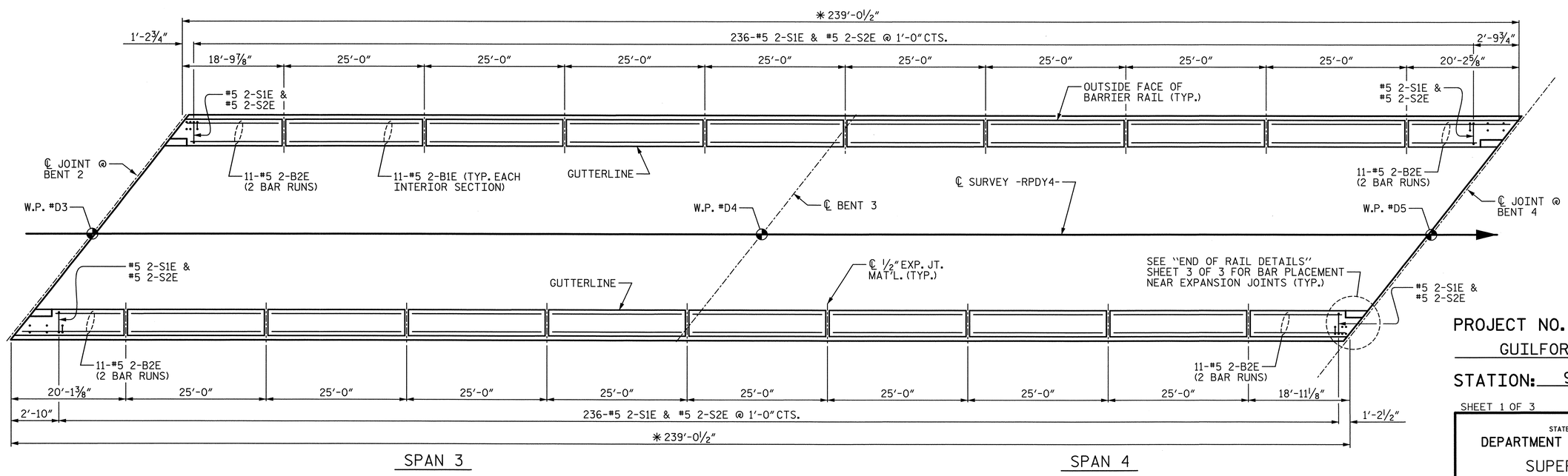

PLAN OF BARRIER RAIL - 2 SPAN CONTINUOUS UNIT 2

NOTE: ALL DIMENSION ARE MEASURED ALONG OUTSIDE FACE OF BARRIER RAIL
✱ @ 60° F

PROJECT NO. U-2524C
GUILFORD COUNTY
STATION: 9+75.28 -RPDY4-

SHEET 1 OF 3

STATE OF NORTH CAROLINA
DEPARTMENT OF TRANSPORTATION
RALEIGH
SUPERSTRUCTURE

CONCRETE BARRIER RAIL

-RAMP D-

PLANS PREPARED BY:
SIMPSON ENGINEERS & ASSOCIATES
5640 Dillard Drive
Suite 200
Cary, NC 27518
(919) 852-0468
(919) 852-0598 (Fax)
www.simpsonengr.com
LICENSURE NO. C-2521

NORTH CAROLINA PROFESSIONAL SEAL 023908 ENGINEER MARK A. AVERETTE
6-5-2013

REVISIONS								SHEET NO.
NO.	BY:	DATE:	NO.	BY:	DATE:			S-804
1			3					TOTAL SHEETS
2			4					836

DRAWN BY: T. BANKOVICH DATE: 4-13
CHECKED BY: M. AVERETTE DATE: 4-13
DESIGN ENGINEER OF RECORD: M. AVERETTE DATE: 4-13

6/5/2013 2:38:27 PM G:\Projects\2011\U-2524 (Guilford Co)\Structures\Ramp D\Drawings\Final\U-2524_sd_rpd_br.dgn

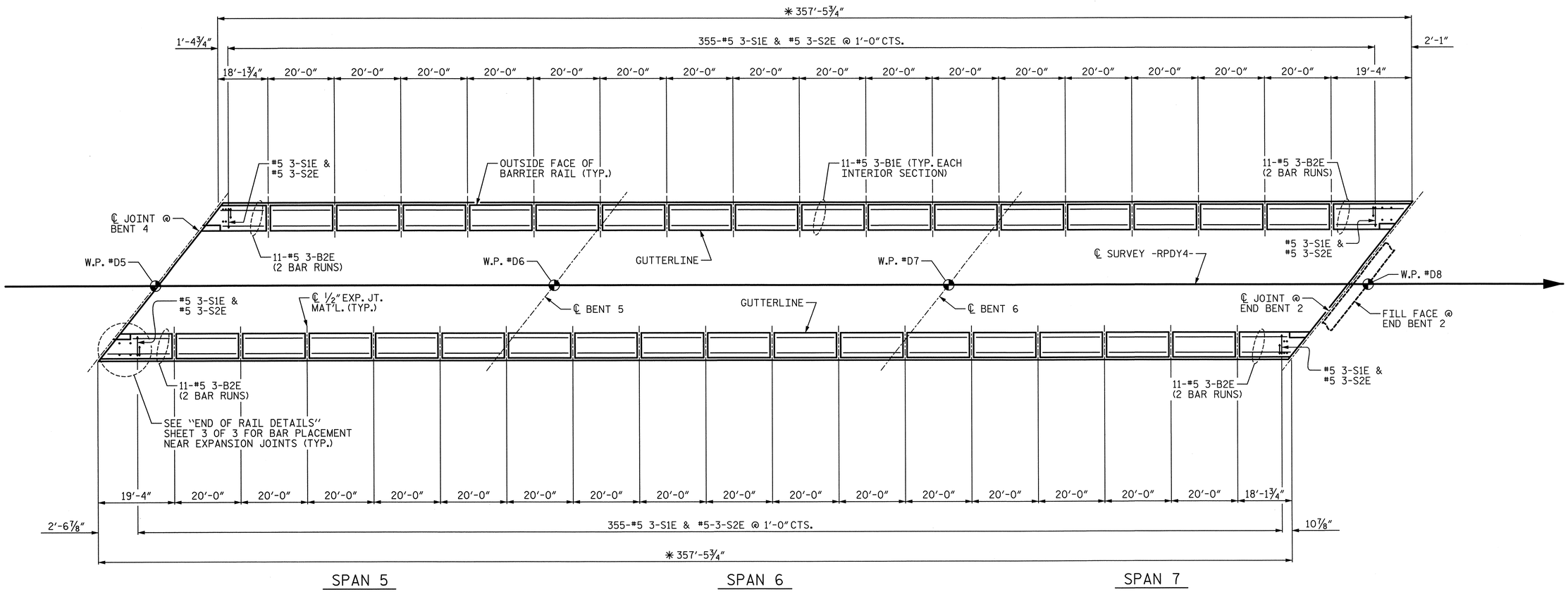

PLAN OF BARRIER RAIL - 3 SPAN CONTINUOUS UNIT 3

NOTE: ALL DIMENSION ARE MEASURED ALONG OUTSIDE FACE OF BARRIER RAIL
✱ @ 60° F

PROJECT NO. U-2524C
GUILFORD COUNTY
STATION: 9+75.28 -RPDY4-

SHEET 2 OF 3

STATE OF NORTH CAROLINA
DEPARTMENT OF TRANSPORTATION
RALEIGH
SUPERSTRUCTURE

CONCRETE BARRIER RAIL

-RAMP D-

REVISIONS						SHEET NO.
NO.	BY:	DATE:	NO.	BY:	DATE:	S-805
1			3			TOTAL SHEETS
2			4			336

PLANS PREPARED BY:
SIMPSON ENGINEERS & ASSOCIATES
5640 Dillard Drive
Suite 200
Cary, NC 27518
(919) 852-0468
(919) 852-0598 (Fax)
www.simpsonengr.com
LICENSURE NO. C-2521

NORTH CAROLINA PROFESSIONAL SEAL 023906 ENGINEER MARK A. AVERETTE
6-5-2013

DRAWN BY: T. BANKOVICH DATE: 4-13
CHECKED BY: M. AVERETTE DATE: 4-13
DESIGN ENGINEER OF RECORD: M. AVERETTE DATE: 4-13

6/5/2013 2:38:31 PM G:\Projects\2011\U-2524 (Guilford Co)\Structures\Ramp D\Drawings\Final\U-2524_sd_rpd_br.dgn

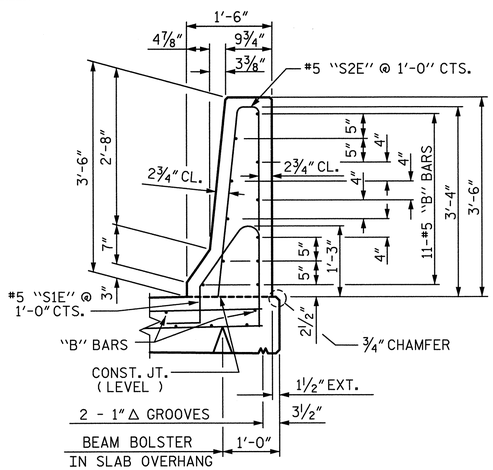

SECTION THRU RAIL

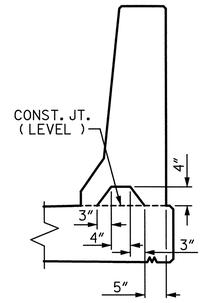

SECTION S-S

AT DAM IN OPEN JOINT
(THIS IS TO BE USED ONLY WHEN SLIP FORM IS USED)

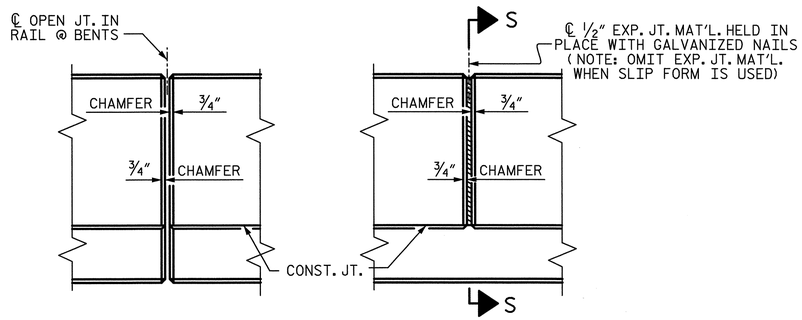

ELEVATION AT EXPANSION JOINTS

BARRIER RAIL DETAILS

NOTE: DETAILS ARE TYPICAL FOR UNITS 1, 2, & 3, THEREFORE BAR MARKS VARY PER UNIT.

BAR TYPES

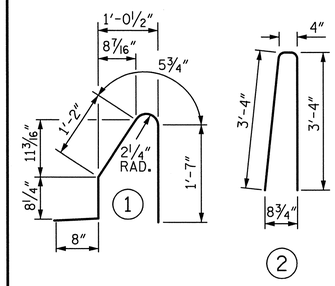

ALL BAR DIMENSIONS ARE OUT TO OUT

BILL OF MATERIAL - UNIT 1

FOR CONCRETE BARRIER RAIL ONLY

BAR	NO.	SIZE	TYPE	LENGTH	WEIGHT
1-B1E	132	5	STR	24'-7"	3385
1-B2E	88	5	STR	11'-6"	1056
1-S1E	367	5	1	4'-7"	1754
1-S2E	367	5	2	7'-0"	2679
1-S3E	16	5	STR	4'-0"	67

EPOXY COATED REINFORCING STEEL 8941 LB

CLASS "AA" CONCRETE 50.6 CY

CONCRETE BARRIER RAIL 372.4 LF

BILL OF MATERIAL - UNIT 2

FOR CONCRETE BARRIER RAIL ONLY

BAR	NO.	SIZE	TYPE	LENGTH	WEIGHT
2-B1E	176	5	STR	24'-7"	4513
2-B2E	88	5	STR	11'-8"	1071
2-S1E	472	5	1	4'-7"	2256
2-S2E	472	5	2	7'-0"	3446
2-S3E	16	5	STR	4'-0"	67

EPOXY COATED REINFORCING STEEL 11353 LB

CLASS "AA" CONCRETE 64.9 CY

CONCRETE BARRIER RAIL 478.1 LF

BILL OF MATERIAL - UNIT 3

FOR CONCRETE BARRIER RAIL ONLY

BAR	NO.	SIZE	TYPE	LENGTH	WEIGHT
3-B1E	352	5	STR	19'-7"	7190
3-B2E	88	5	STR	11'-3"	1033
S1E	710	5	1	4'-7"	3394
S2E	710	5	2	7'-0"	5184
S3E	16	5	STR	4'-0"	67

EPOXY COATED REINFORCING STEEL 16868 LB

CLASS "AA" CONCRETE 97.1 CY

CONCRETE BARRIER RAIL 714.9 LF

TOTAL CONCRETE BARRIER RAIL ON DECK = 1565.4 LF

"E" INDICATES EPOXY COATED REINFORCING STEEL

NOTES:

THE BARRIER RAIL IN EACH CONTINUOUS UNIT AND ON APPROACH SLABS SHALL NOT BE CAST UNTIL ALL SLAB CONCRETE IN THAT CONTINUOUS UNIT AND APPROACH SLABS HAS BEEN CAST AND HAS REACHED A MINIMUM COMPRESSIVE STRENGTH OF 3,000 PSI.

ALL REINFORCING STEEL IN BARRIER RAILS SHALL BE EPOXY COATED.

GROOVED CONTRACTION JOINTS, 1/2" IN DEPTH, SHALL BE TOOLED IN ALL EXPOSED FACES OF THE BARRIER RAIL AND IN ACCORDANCE WITH ARTICLE 825-10(B) OF THE STANDARD SPECIFICATIONS. THE CONTRACTION JOINT SHALL BE LOCATED AT EACH THIRD POINT BETWEEN BARRIER RAIL EXPANSION JOINTS. ONLY ONE CONTRACTION JOINT IS REQUIRED AT MIDPOINT OF BARRIER RAIL SEGMENTS LESS THAN 20 FEET IN LENGTH AND NO CONTRACTION JOINTS ARE REQUIRED FOR THOSE SEGMENTS LESS THAN 10 FEET IN LENGTH.

THE #5 1-S1E, 2-S1E, 3-S1E, AND #5 1-S2E, 2-S2E, 3-S2E BARS MAY BE SHIFTED AS NECESSARY TO MAINTAIN A 2" MINIMUM CLEARANCE FROM THE CENTERLINE OF THE EXPANSION JOINT IN BARRIER RAIL SECTIONS.

FOR DETAILS, QUANTITIES, AND LIN. FEET FOR CONCRETE BARRIER RAIL ON APPROACH SLABS, SEE "BRIDGE APPROACH SLAB DETAILS" SHEET.

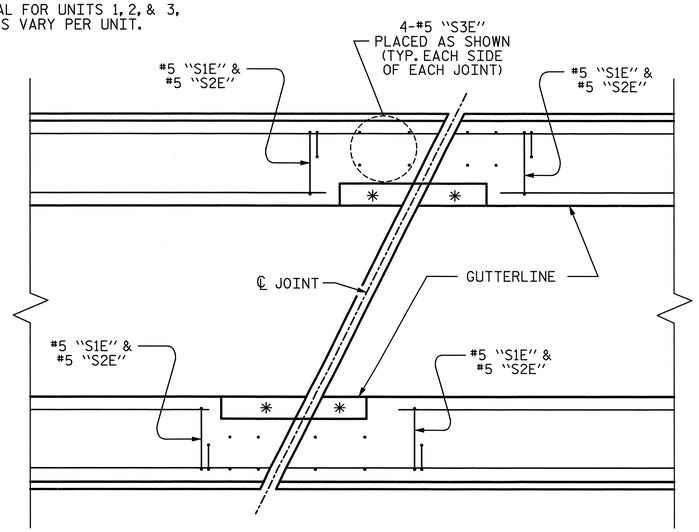

PLAN

*FOR RECESS DETAILS SEE "EXPANSION JOINT SEAL DETAILS", SHEET 2 OF 3

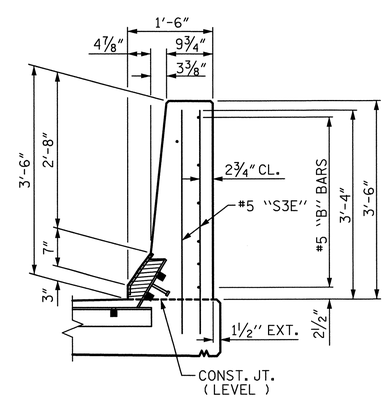

END VIEW @ EXP. JOINTS

END OF RAIL DETAILS @ EXP. JOINTS

NOTE: DETAILS ARE TYPICAL FOR UNITS 1, 2, & 3, THEREFORE BAR MARKS VARY PER UNIT.

PROJECT NO. U-2524C

GUILFORD COUNTY

STATION: 9+75.28 -RPDY4-

SHEET 3 OF 3

STATE OF NORTH CAROLINA
DEPARTMENT OF TRANSPORTATION
RALEIGH

SUPERSTRUCTURE

CONCRETE BARRIER RAIL

-RAMP D-

PLANS PREPARED BY:
SIMPSON ENGINEERS & ASSOCIATES
5640 Dillard Drive
Suite 200
Cary, NC 27518
(919) 852-0468
(919) 852-0598 (Fax)
www.simpsonengr.com
LICENSURE NO. C-2521

NORTH CAROLINA PROFESSIONAL ENGINEER SEAL 023906 MARK A. AVERETTE 6-5-2013

REVISIONS								SHEET NO.
NO.	BY:	DATE:	NO.	BY:	DATE:			S-806
1			3					TOTAL SHEETS
2			4					836

DRAWN BY: T. BANKOVICH DATE: 4-13
CHECKED BY: M. AVERETTE DATE: 4-13
DESIGN ENGINEER OF RECORD: M. AVERETTE DATE: 4-13

6/5/2013 2:38:36 PM G:\Projects\2011\U-2524 (Guilford Co)\Structures\Ramp D\Drawings\Final\U-2524_sd_rpd_br.dgn

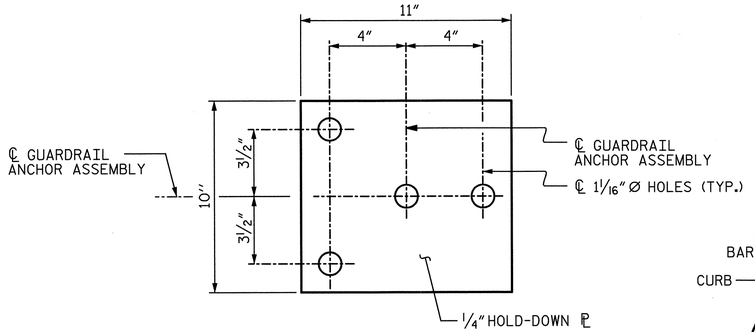

PLAN

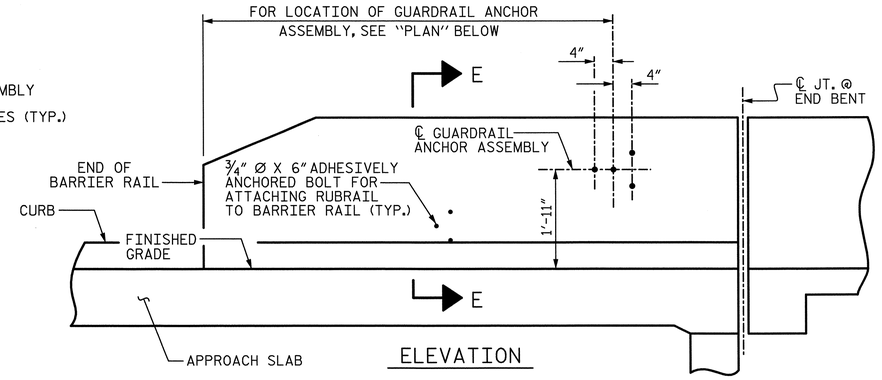

ELEVATION

NOTES:

THE GUARDRAIL ANCHOR ASSEMBLY SHALL CONSIST OF A 1/4" HOLD-DOWN PLATE AND 4 - 7/8" Ø BOLTS WITH NUTS AND WASHERS, RUBRAIL, AND ADHESIVELY ANCHORED BOLTS.

THE HOLD-DOWN PLATE SHALL CONFORM TO AASHTO M270 GRADE 36. AFTER FABRICATION, THE HOLD-DOWN PLATE SHALL BE HOT-DIP GALVANIZED IN ACCORDANCE WITH AASHTO M111.

BOLTS SHALL CONFORM TO THE REQUIREMENTS OF ASTM A307 AND NUTS SHALL CONFORM TO THE REQUIREMENTS OF AASHTO M291. BOLTS, NUTS AND WASHERS SHALL BE GALVANIZED. (AT THE CONTRACTOR'S OPTION, STAINLESS STEEL BOLTS, NUTS AND WASHERS MAY BE USED AS AN ALTERNATE FOR THE 7/8" Ø GALVANIZED BOLTS, NUTS AND WASHERS. THEY SHALL CONFORM TO OR EXCEED THE MECHANICAL REQUIREMENTS OF ASTM A307. THE USE OF THIS ALTERNATE SHALL BE APPROVED BY THE ENGINEER.)

THE GUARDRAIL ANCHOR ASSEMBLY IS REQUIRED AT ALL POINTS WHERE APPROACH GUARDRAIL IS TO BE ATTACHED TO THE END OF BARRIER RAIL. FOR POINTS OF ATTACHMENT, SEE SKETCH.

AFTER INSTALLATION, THE EXPOSED THREAD OF THE BOLT SHALL BE BURRED WITH A SHARP POINTED TOOL.

THE COST OF THE GUARDRAIL ANCHOR ASSEMBLY SHALL BE INCLUDED IN THE UNIT CONTRACT PRICE BID FOR CONCRETE BARRIER RAIL.

THE 1 1/4" Ø HOLES SHALL BE FORMED OR DRILLED WITH A CORE BIT. IMPACT TOOLS WILL NOT BE PERMITTED. ANY CONCRETE DAMAGED BY THIS WORK SHALL BE REPAIRED TO THE SATISFACTION OF THE ENGINEER.

THE C6 X 8.2 RUBRAIL IS TO BE ADHESIVELY ANCHORED TO THE RAIL USING THREE 3/4" Ø X 6" BOLTS WITH WASHERS. LEVEL ONE FIELD TESTING IS REQUIRED, AND THE YIELD LOAD OF THE 3/4" Ø BOLT IS 12 KIPS. FOR ADHESIVELY ANCHORED ANCHOR BOLTS OR DOWELS, SEE STANDARD SPECIFICATIONS. SEE ROADWAY STANDARD 862.03 FOR DETAILS AND LOCATION OF THE RUBRAIL.

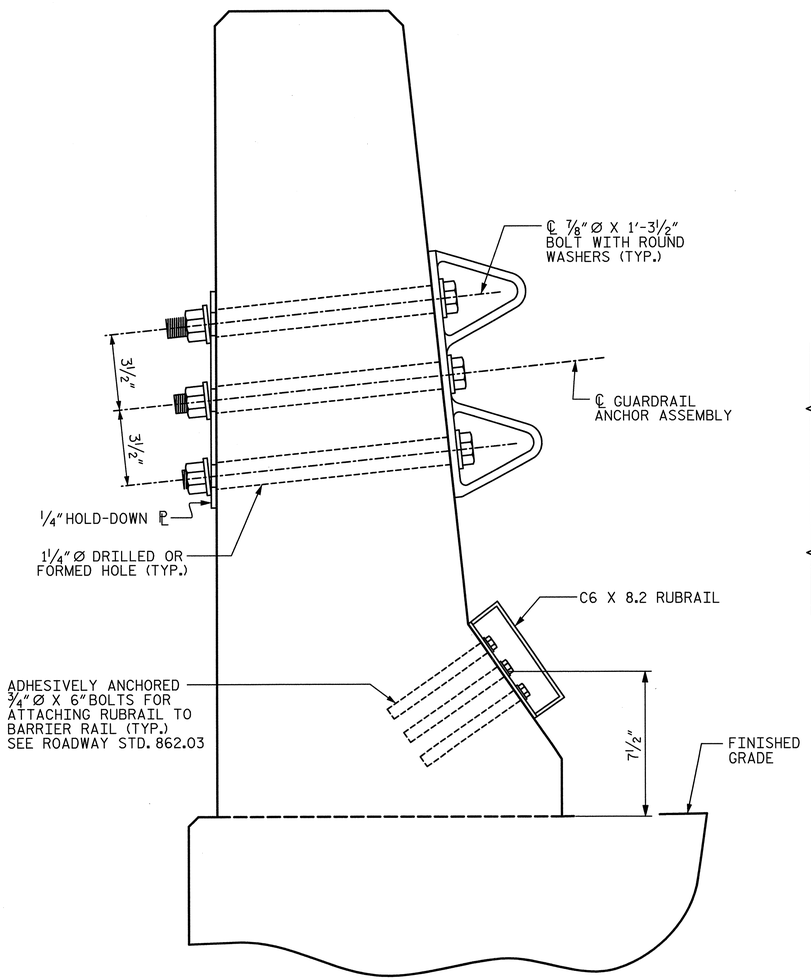

SECTION E-E

GUARDRAIL ANCHOR ASSEMBLY DETAILS

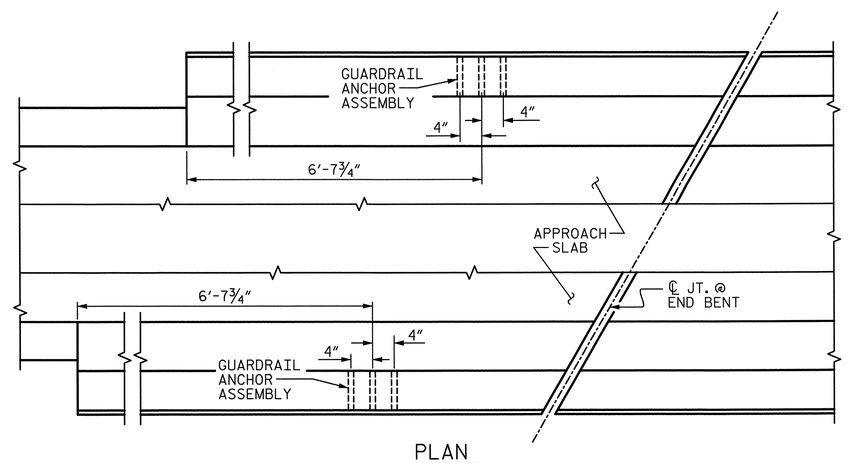

PLAN

LOCATION OF ANCHORS FOR GUARDRAIL

END BENT 1 SHOWN, END BENT 2 SIMILAR

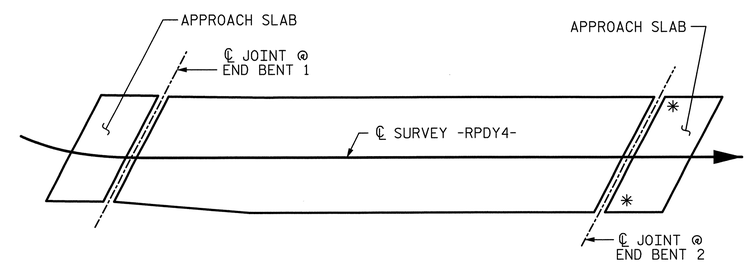

SKETCH SHOWING POINTS OF ATTACHMENTS

✱ DENOTES GUARDRAIL ANCHOR ASSEMBLY

PROJECT NO. U-2524C

GUILFORD COUNTY

STATION: 9+75.28 -RPDY4-

STATE OF NORTH CAROLINA
DEPARTMENT OF TRANSPORTATION
RALEIGH
SUPERSTRUCTURE

GUARDRAIL ANCHORAGE FOR BARRIER RAIL

-RAMP D-

REVISIONS								SHEET NO.
NO.	BY:	DATE:	NO.	BY:	DATE:			S-807
1			3					TOTAL SHEETS
2			4					836

PLANS PREPARED BY:

SIMPSON ENGINEERS & ASSOCIATES
5640 Dillard Drive
Suite 200
Cary, NC 27518
(919) 852-0468
(919) 852-0598 (Fax)
www.simpsonengr.com
LICENSURE NO. C-2521

NORTH CAROLINA PROFESSIONAL SEAL 023906 ENGINEER MARK A. AVERETTE
6-5-2013

DRAWN BY: T. BANKOVICH DATE: 4-13
CHECKED BY: M. AVERETTE DATE: 4-13
DESIGN ENGINEER OF RECORD: M. AVERETTE DATE: 4-13

6/5/2013 2:38:40 PM G:\Projects\2011\U-2524 (Guilford Co)\Structures\Ramp D\Drawings\Final\U-2524_sd_rpd_gr.dgn

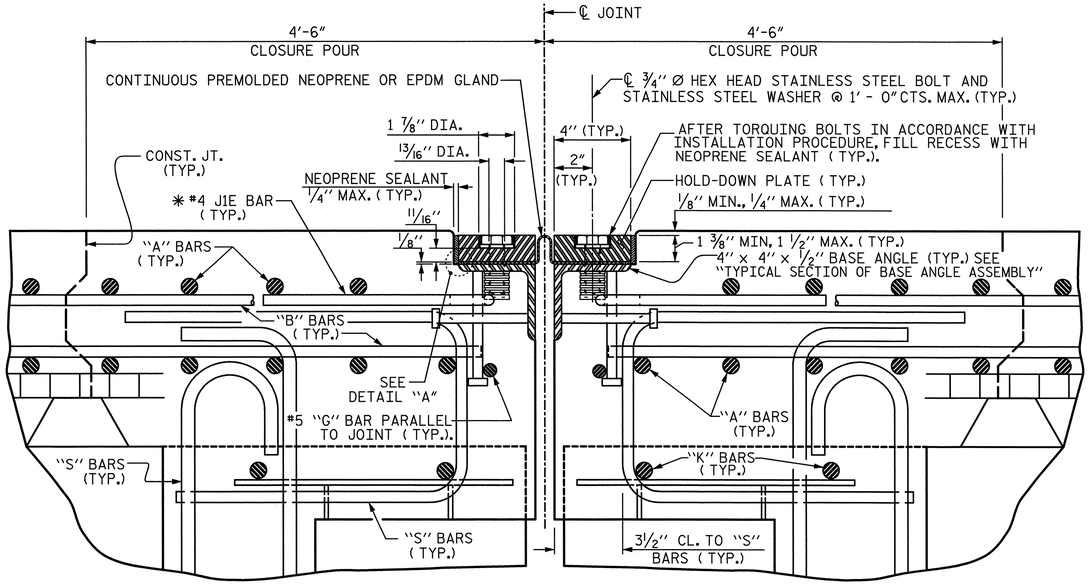

EXPANSION JOINT DETAILS

SECTION NORMAL TO JOINT -- PRESTRESSED GIRDER SUPERSTRUCTURE
(JOINT @ INTERIOR BENT SHOWN, JOINTS @ END BENTS SIMILAR)

✱ THE QUANTITY OF #4 J1E BARS ON THE BILL OF MATERIAL IS BASED ON 1'-0" CENTERS. J1E BARS SHALL BE PLACED AT EACH VERTICAL STUD ANCHOR BOLT. IN THE EVENT THAT THE NUMBER OF VERTICAL STUD ANCHORS EXCEEDS THE NUMBER OF J1E BARS SPECIFIED, ADDITIONAL J1E BARS WILL NOT BE REQUIRED.

INSTALLATION PROCEDURE:

1. A TEMPLATE OR OTHER SUITABLE DEVICE SHALL BE USED TO FORM THE TOP OF THE EXPANSION JOINT SEAL BLOCKOUT TO THE PROPER DEPTH AND WIDTH. THE TEMPLATE SHALL BE 4⅛" TO 4¼" WIDE AND OF SUCH THICKNESS AS TO PROVIDE FOR CORRECT FINAL ELEVATION OF TOP OF HOLD-DOWN PLATES. THE TEMPLATE SHALL BE ATTACHED TO THE BASE ANGLE ASSEMBLY WITH THE ¾" Ø HEX HEAD BOLTS PROVIDED FOR THE HOLD-DOWN PLATES. A 1" Ø HOLE SHALL BE PROVIDED IN THE TEMPLATE CENTERED OVER EACH WEEP HOLE IN THE 4" X 4" X ½" BASE ANGLE. OTHER METHODS OF INSURING DRAINAGE THROUGH WEEP HOLES MAY BE EMPLOYED SUBJECT TO ENGINEER'S APPROVAL.
2. AFTER THE CONCRETE HAS BEEN CAST ON BOTH SIDES OF THE JOINT, REMOVE THE TEMPLATE. THOROUGHLY CLEAN THE BOLT HOLES AND THE ANGLE PLATE. REMOVE ANY EXCESS CONCRETE THAT COMES OUT OF THE WEEP HOLES. ANY DAMAGED STEEL SHALL BE COATED WITH A MINIMUM THICKNESS OF 4 DRY MILS OF ZINC-RICH PAINT IN ACCORDANCE WITH THE STANDARD SPECIFICATIONS.
3. LAY THE GLAND ON THE BASE ANGLE AND FIELD MARK THE GLAND FOR THE BOLT HOLES. HOLES IN THE GLAND SHALL BE PUNCHED ⅞" IN DIAMETER WITH A HAND PUNCH.
4. IN ORDER TO CHECK FOR PROPER ALIGNMENT, PLACE THE GLAND AND HOLD-DOWN PLATES ON THE BASE ANGLE. DO NOT APPLY NEOPRENE SEALANT. BOLT THE HOLD-DOWN PLATES TO THE BASE ANGLE BUT DO NOT TIGHTEN. THE ENGINEER SHALL INSPECT THE JOINT SEAL DEVICE FOR PROPER ALIGNMENT.
5. AFTER INSPECTION, REMOVE THE HOLD-DOWN PLATES AND GLAND. APPLY NEOPRENE SEALANT TO THE BASE ANGLE IN ACCORDANCE WITH THE "INSTALLATION SKETCH". PLACE GLAND AND HOLD-DOWN PLATES ON THE BASE ANGLE. BOLT THE HOLD-DOWN PLATES TO THE BASE ANGLE ASSEMBLY AND TORQUE THE BOLTS TO 88 FT-LBS WITH A TORQUE WRENCH. CHECK THE TORQUE AFTER THREE (3) HOURS AND, IF NECESSARY, RETIGHTEN TO 88 FT-LBS. A FINAL CHECK SHALL BE MADE AT SEVEN (7) DAYS. TORQUE SHALL NOT BE LESS THAN 80 FT-LBS AFTER SEVEN (7) DAYS.
6. AFTER PROPER TORQUING, CLEAN THE BOLT HOLE RECESSES AND THE RECESS BETWEEN THE JOINT SEAL DEVICE AND CONCRETE, COMPLETELY FILL THESE RECESSES WITH NEOPRENE SEALANT.

NOTES:

1. FOR EXPANSION JOINT SEALS, SEE SPECIAL PROVISIONS.
2. ALL PLATES AND ANGLES SHALL CONFORM TO AASHTO M270 GRADE 36 STEEL OR APPROVED EQUAL. ALL HOLD-DOWN BOLTS SHALL CONFORM TO ASTM F593 ALLOY 304 STAINLESS STEEL AND WASHERS SHALL CONFORM TO ASTM F844 EXCEPT THEY SHALL BE MADE FROM ALLOY 304 STAINLESS STEEL. ALL STUD ANCHORS SHALL CONFORM TO AASHTO M169, GRADES 1010 THRU 1020 OR APPROVED EQUAL. ALL CONCRETE INSERTS SHALL BE CLOSED END AND SHALL CONFORM TO AASHTO M169, GRADE 12L14. TENSILE CAPACITY SHALL BE 3000 LBS. MIN.
3. A PREMOLDED CORRUGATED OR NON-CORRUGATED GLAND SHALL BE USED FOR JOINTS SKEWED BETWEEN 50° THRU 130°. FOR JOINTS SKEWED LESS THAN 50° OR MORE THAN 130°, ONLY A CORRUGATED GLAND SHALL BE USED.
4. CLOSED END FERRULES AND STUD ANCHORS SHALL BE SHOP WELDED AND ALL HOLES SHALL BE SHOP DRILLED AS SHOWN ON PLANS. STUD ANCHORS SHALL BE ELECTRIC ARC END WELDED WITH COMPLETE FUSION.
5. SURFACES COMING IN CONTACT WITH NEOPRENE SHALL BE GROUND SMOOTH PRIOR TO METALLIZING.
6. UPON COMPLETION OF SHOP FABRICATION, THE HOLD DOWN PLATE AND BASE ANGLE ASSEMBLY, AS SHOWN IN THE "TYPICAL SECTION OF BASE ANGLE ASSEMBLY", SHALL BE METALLIZED. SEE SPECIAL PROVISION FOR THERMAL SPRAYED COATINGS (METALLIZATION).
7. BASE ANGLE ASSEMBLY SHALL BE CONTINUOUS FOR THE LENGTH OF THE JOINT. AT CROWN BREAKS, THE ENDS OF THE BASE ANGLE ASSEMBLY SHALL BE CUT PARALLEL TO THE BRIDGE CENTERLINE FOR SKEWS LESS THAN 80° AND GREATER THAN 100°. FINISHED WELD SHALL BE GROUND SMOOTH AND COATED WITH A MINIMUM THICKNESS OF 4 DRY MILS OF ZINC-RICH PAINT IN ACCORDANCE WITH THE STANDARD SPECIFICATIONS.
8. FIELD SPLICES OF HOLD-DOWN PLATES SHALL BE KEPT TO A MINIMUM. CONTRACTOR SHALL FURNISH DETAILED PLANS SHOWING PROPOSED SPLICE LOCATIONS FOR APPROVAL. HOLD-DOWN PLATES SHALL NOT EXCEED 20' LENGTHS UNLESS APPROVED BY THE ENGINEER.
9. NO ALTERNATE JOINT DETAILS SHALL BE PERMITTED IN LIEU OF THOSE SHOWN ON THESE PLANS.
10. THE CONTRACTOR MAY, AT HIS OPTION, USE ADHESIVELY ANCHORED ANCHOR BOLTS IN PLACE OF CONCRETE INSERTS FOR COVER PLATES. THE YIELD LOAD OF THE ¾" Ø BOLT IS 10 KIPS. FIELD TESTING OF THE ADHESIVE BONDING SYSTEM IS NOT REQUIRED.

MOVEMENT AND SETTING AT JOINT

BENT NO.	SKEW ANGLE	TOTAL MOVEMENT (ALONG ℄ RDWY)	PERPENDICULAR JOINT OPENING AT 45° F	PERPENDICULAR JOINT OPENING AT 60° F	PERPENDICULAR JOINT OPENING AT 90° F
END BT. 1	128°-08'-22"	13/16"	1⅜"	1¼"	1 1/16"
BENT 2	128°-26'-19"	1¾"	1 13/16"	1⅝"	1 3/16"
BENT 4	128°-26'-19"	2½"	2 3/16"	1⅞"	1 5/16"
END BT. 2	128°-26'-19"	1½"	1 11/16"	1½"	1 3/16"

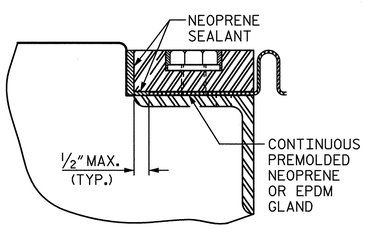

"DETAIL A"

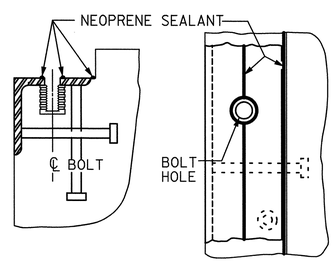

CROSS SECTION PLAN VIEW

INSTALLATION SKETCH

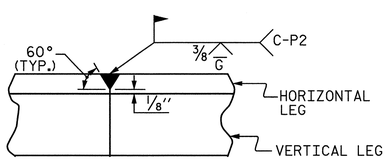

DETAIL- FIELD WELD SPLICE OF BASE ANGLE

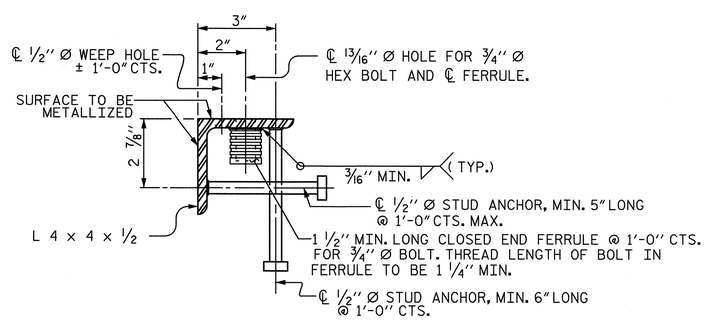

TYPICAL SECTION OF BASE ANGLE ASSEMBLY

PROJECT NO. U-2524C
GUILFORD COUNTY
STATION: 9+75.28 -RPDY4-

SHEET 1 OF 3

STATE OF NORTH CAROLINA
DEPARTMENT OF TRANSPORTATION
RALEIGH
SUPERSTRUCTURE

EXPANSION JOINT SEAL DETAILS

-RAMP D-

PLANS PREPARED BY:
SIMPSON ENGINEERS & ASSOCIATES
5640 Dillard Drive
Suite 200
Cary, NC 27518
(919) 852-0468
(919) 852-0598 (Fax)
www.simpsonengr.com
LICENSURE NO. C-2521

NORTH CAROLINA PROFESSIONAL SEAL 023906 ENGINEER MARK A. AVERETTE
6-5-2013

REVISIONS						
NO.	BY:	DATE:	NO.	BY:	DATE:	
1			3			
2			4			

SHEET NO. S-808
TOTAL SHEETS 836

DRAWN BY: T. BANKOVICH DATE: 4-13
CHECKED BY: M. AVERETTE DATE: 4-13
DESIGN ENGINEER OF RECORD: M. AVERETTE DATE: 4-13

6/5/2013 2:38:45 PM G:\Projects\2011\U-2524 (Guilford Co)\Structures\Ramp D\Drawings\Final\U-2524_sd_rpd_JS.dgn

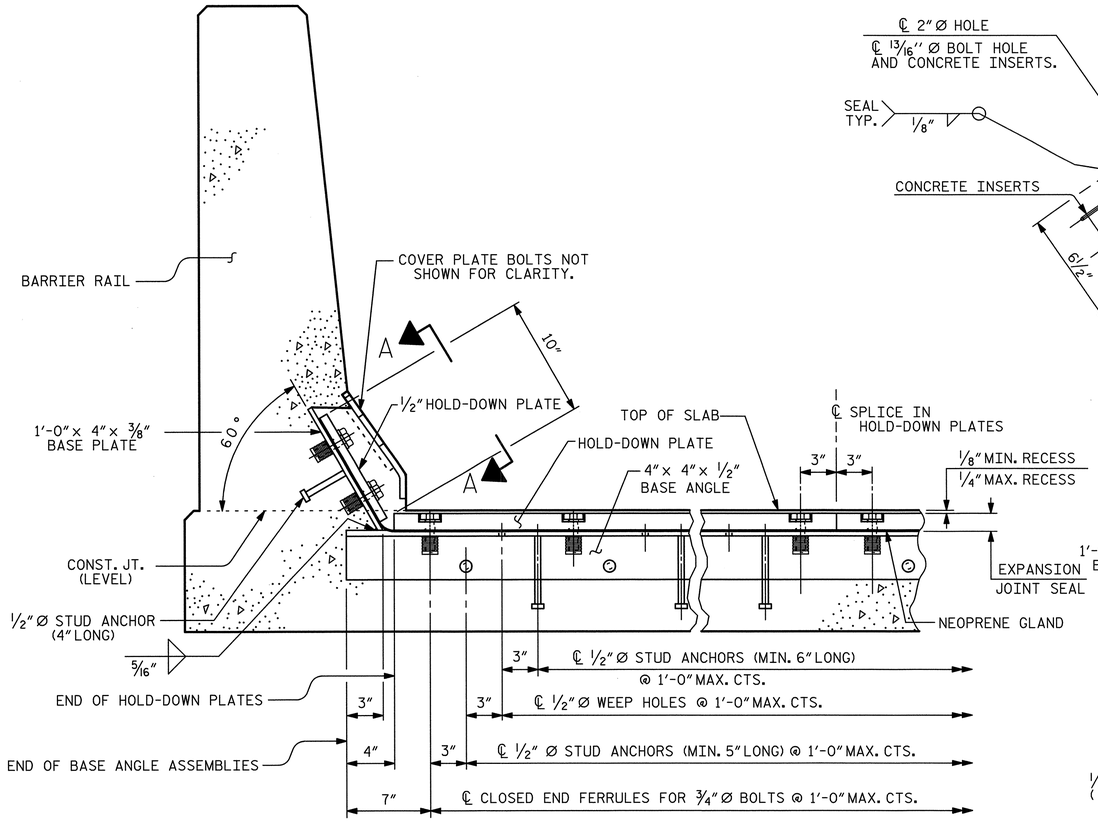

SECTION THRU RAIL NORMAL TO JOINT

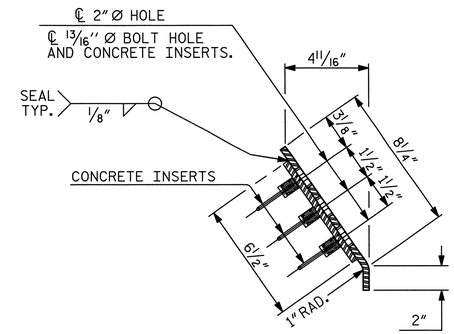

END VIEW

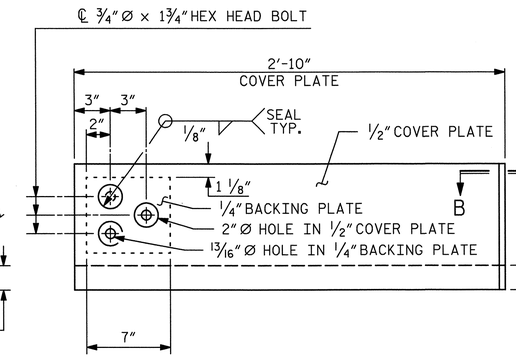

TYPE I - ELEVATION VIEW

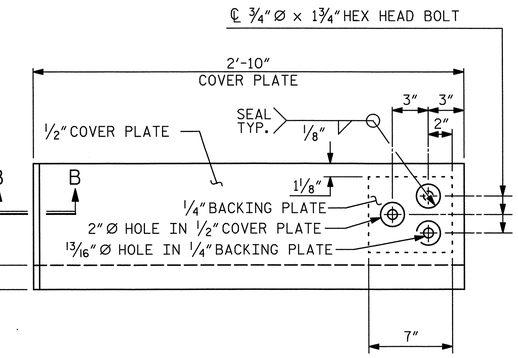

TYPE II - ELEVATION VIEW

BEND ALONG THIS LINE

COVER PLATE DETAILS

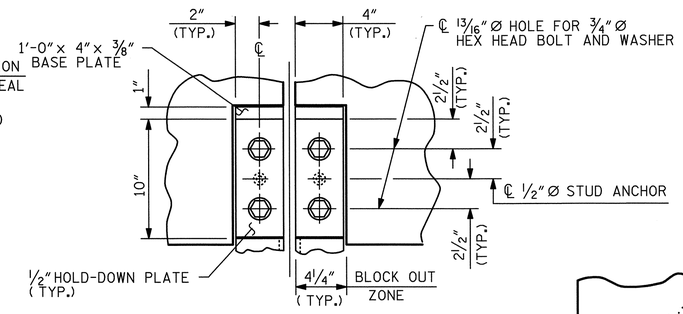

SECTION A-A

NOTE: FOR PAVEMENT MARKING ALIGNMENT, SEE SHEET 3 OF 3.

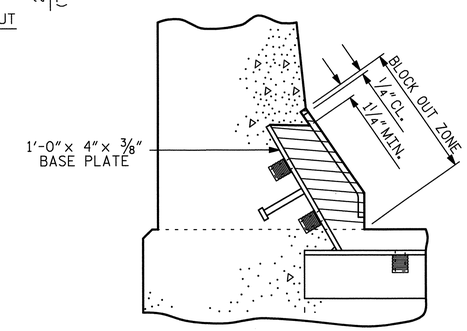

BLOCK OUT DETAIL

SEE "SECTION A - A" FOR OTHER DETAILS.

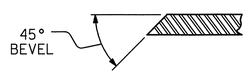

SECTION B-B

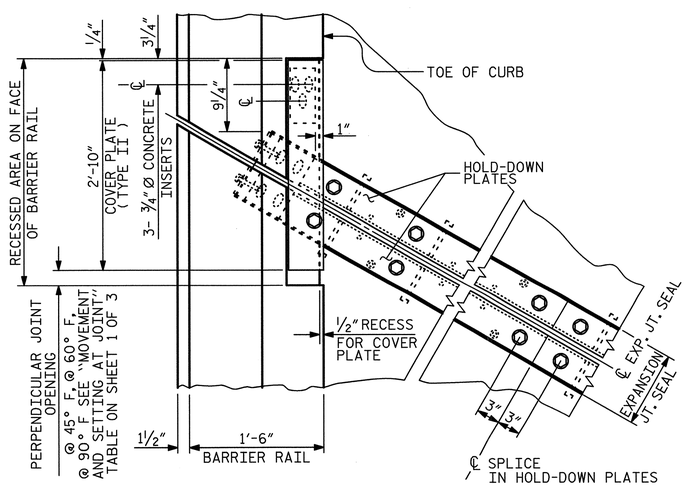

FLOW OF TRAFFIC

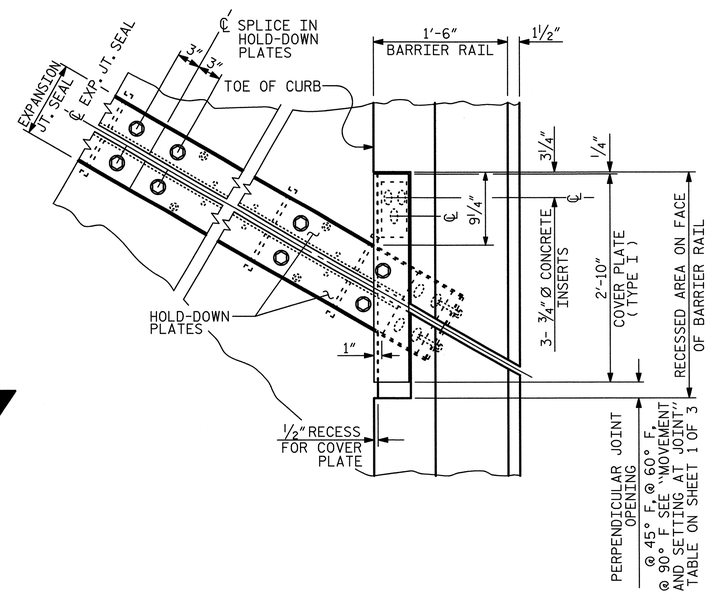

PLAN OF EXPANSION JOINT SEAL

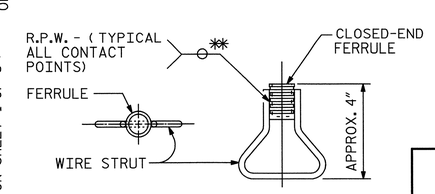

PLAN ELEVATION

CONCRETE INSERT

** EACH WELDED ATTACHMENT OF WIRE TO FERRULE SHALL DEVELOP THE TENSILE STRENGTH OF THE WIRE.

PLANS PREPARED BY:
SIMPSON ENGINEERS & ASSOCIATES
5640 Dillard Drive
Suite 200
Cary, NC 27518
(919) 852-0468
(919) 852-0598 (Fax)
www.simpsonengr.com
LICENSURE NO. C2521

NORTH CAROLINA PROFESSIONAL SEAL 023906 ENGINEER MARK A. AVERETTE
6-5-2013

PROJECT NO. U-2524C
GUILFORD COUNTY
STATION: 9+75.28 -RPDY4-

SHEET 2 OF 3

STATE OF NORTH CAROLINA
DEPARTMENT OF TRANSPORTATION
RALEIGH
SUPERSTRUCTURE

EXPANSION JOINT SEAL DETAILS FOR BARRIER RAIL

-RAMP D-

REVISIONS						SHEET NO.
NO.	BY:	DATE:	NO.	BY:	DATE:	S-809
1			3			TOTAL SHEETS
2			4			836

DRAWN BY:	T. BANKOVICH	DATE:	4-13
CHECKED BY:	M. AVERETTE	DATE:	4-13
DESIGN ENGINEER OF RECORD:	M. AVERETTE	DATE:	4-13

6/5/2013 2:38:50 PM G:\Projects\2011\U-2524 (Guilford Co)\Structures\Ramp D\Drawings\Final\U-2524_sd_rpd_JS.dgn

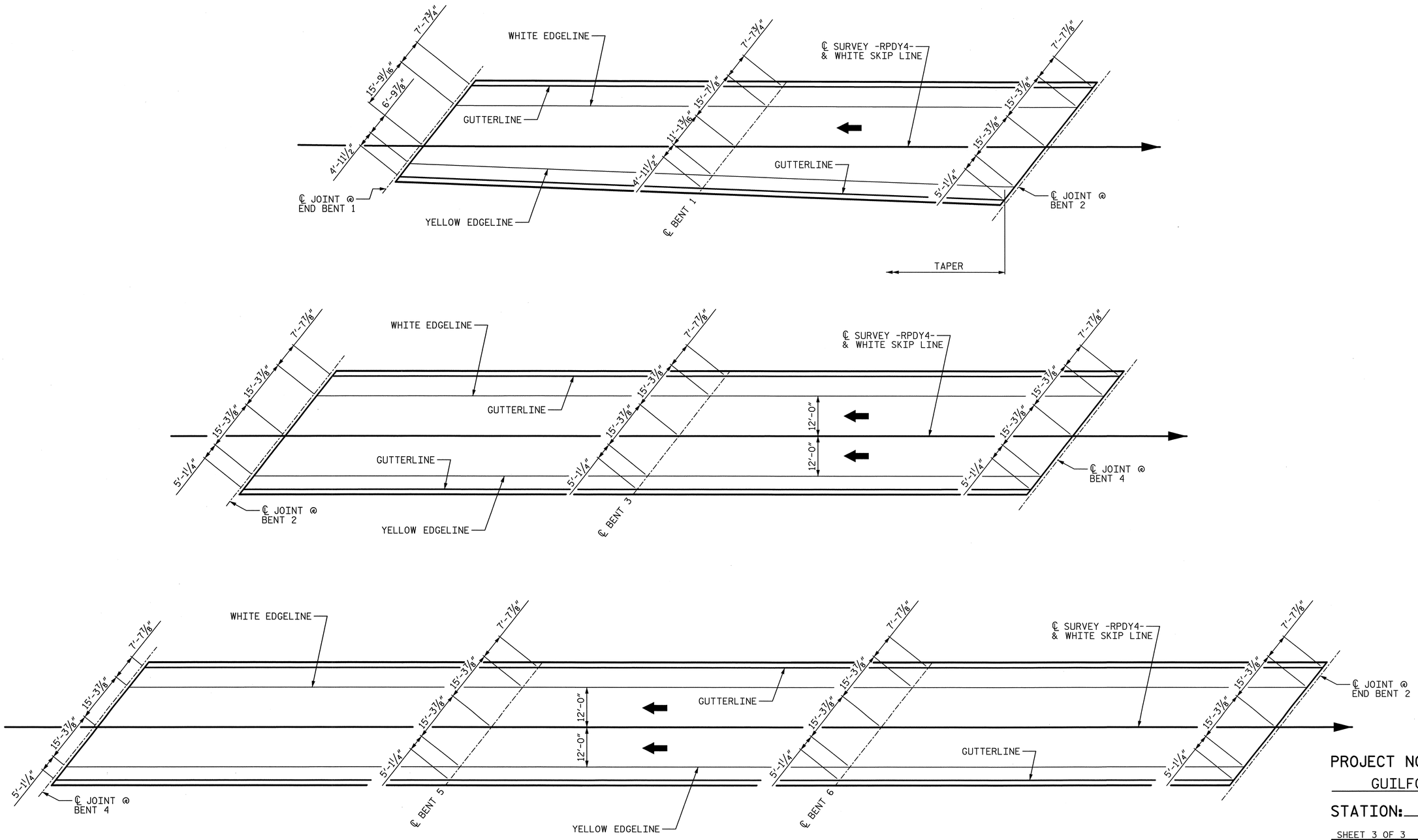

PAVEMENT MARKING ALIGNMENT

PROJECT NO. U-2524C

GUILFORD COUNTY

STATION: 9+75.28 -RPDY4-

SHEET 3 OF 3

STATE OF NORTH CAROLINA
DEPARTMENT OF TRANSPORTATION
RALEIGH
SUPERSTRUCTURE

PAVEMENT MARKING ALIGNMENT

-RAMP D-

PLANS PREPARED BY:

SIMPSON ENGINEERS & ASSOCIATES
5640 Dillard Drive
Suite 200
Cary, NC 27518
(919) 852-0468
(919) 852-0598 (Fax)
www.simpsonengr.com
LICENSURE NO. C-2521

NORTH CAROLINA PROFESSIONAL SEAL 023906 ENGINEER MARK A. AVERETTE
6-5-2013

REVISIONS						SHEET NO.
NO.	BY:	DATE:	NO.	BY:	DATE:	S-810
1			3			TOTAL SHEETS
2			4			836

DRAWN BY: T. BANKOVICH DATE: 4-13
CHECKED BY: M. AVERETTE DATE: 4-13
DESIGN ENGINEER OF RECORD: M. AVERETTE DATE: 4-13

6/5/2013 2:38:54 PM G:\Projects\2011\U-2524 (Guilford Co)\Structures\Ramp D\Drawings\Final\U-2524_sd_rpd_pm.dgn

REINFORCING BAR SCHEDULE FOR 2 SPAN CONTINUOUS UNIT 1
(SPANS 1 & 2)

BAR	NO.	SIZE	TYPE	LENGTH	WEIGHT
A1E	29	5	STR	31'-4"	948
A2E	29	5	STR	31'-10"	963
A3E	29	5	STR	32'-4"	978
A4E	29	5	STR	32'-10"	993
A5E	29	5	STR	33'-4"	1008
A6E	29	5	STR	33'-10"	1023
A7E	29	5	STR	34'-5"	1041
A8E	29	5	STR	34'-11"	1056
A9E	29	5	STR	35'-5"	1071
A10E	29	5	STR	35'-11"	1086
A11E	29	5	STR	36'-5"	1101
A12	29	5	STR	31'-4"	948
A13	29	5	STR	31'-10"	963
A14	29	5	STR	32'-4"	978
A15	29	5	STR	32'-10"	993
A16	29	5	STR	33'-4"	1008
A17	29	5	STR	33'-10"	1023
A18	29	5	STR	34'-5"	1041
A19	29	5	STR	34'-11"	1056
A20	29	5	STR	35'-5"	1071
A21	29	5	STR	35'-11"	1086
A22	29	5	STR	36'-5"	1101
1-A101E	1	5	STR	1'-4"	1
1-A102E	1	5	STR	2'-0"	2
1-A103E	1	5	STR	2'-8"	3
1-A104E	1	5	STR	3'-4"	3
1-A105E	1	5	STR	3'-11"	4
1-A106E	1	5	STR	4'-7"	5
1-A107E	1	5	STR	5'-3"	5
1-A108E	1	5	STR	5'-11"	6
1-A109E	1	5	STR	6'-7"	7
1-A110E	1	5	STR	7'-2"	7
1-A111E	1	5	STR	7'-10"	8
1-A112E	1	5	STR	8'-6"	9
1-A113E	1	5	STR	9'-2"	10
1-A114E	1	5	STR	9'-10"	10
1-A115E	1	5	STR	10'-5"	11
1-A116E	1	5	STR	11'-1"	12
1-A117E	1	5	STR	11'-9"	12
1-A118E	1	5	STR	12'-5"	13
1-A119E	1	5	STR	13'-0"	14
1-A120E	1	5	STR	13'-8"	14
1-A121E	1	5	STR	14'-4"	15
1-A122E	1	5	STR	15'-0"	16
1-A123E	1	5	STR	15'-8"	16

BAR	NO.	SIZE	TYPE	LENGTH	WEIGHT
1-A124E	1	5	STR	16'-3"	17
1-A125E	1	5	STR	16'-11"	18
1-A126E	1	5	STR	17'-7"	18
1-A127E	1	5	STR	18'-3"	19
1-A128E	1	5	STR	18'-11"	20
1-A129E	1	5	STR	19'-6"	20
1-A130E	1	5	STR	20'-2"	21
1-A131E	1	5	STR	20'-10"	22
1-A132E	1	5	STR	21'-6"	22
1-A133E	1	5	STR	22'-1"	23
1-A134E	1	5	STR	22'-9"	24
1-A135E	1	5	STR	23'-5"	24
1-A136E	1	5	STR	24'-1"	25
1-A137E	1	5	STR	24'-9"	26
1-A138E	1	5	STR	25'-4"	26
1-A139E	1	5	STR	26'-0"	27
1-A140E	1	5	STR	26'-8"	28
1-A141E	1	5	STR	27'-4"	29
1-A142E	1	5	STR	28'-0"	29
1-A143E	1	5	STR	28'-7"	30
1-A144E	1	5	STR	29'-3"	31
1-A145E	1	5	STR	29'-11"	31
1-A146E	1	5	STR	30'-7"	32
1-A201	1	5	STR	1'-4"	1
1-A202	1	5	STR	2'-0"	2
1-A203	1	5	STR	2'-8"	3
1-A204	1	5	STR	3'-4"	3
1-A205	1	5	STR	3'-11"	4
1-A206	1	5	STR	4'-7"	5
1-A207	1	5	STR	5'-3"	5
1-A208	1	5	STR	5'-11"	6
1-A209	1	5	STR	6'-7"	7
1-A210	1	5	STR	7'-2"	7
1-A211	1	5	STR	7'-10"	8
1-A212	1	5	STR	8'-6"	9
1-A213	1	5	STR	9'-2"	10
1-A214	1	5	STR	9'-10"	10
1-A215	1	5	STR	10'-5"	11
1-A216	1	5	STR	11'-1"	12
1-A217	1	5	STR	11'-9"	12
1-A218	1	5	STR	12'-5"	13
1-A219	1	5	STR	13'-0"	14
1-A220	1	5	STR	13'-8"	14
1-A221	1	5	STR	14'-4"	15
1-A222	1	5	STR	15'-0"	16

BAR	NO.	SIZE	TYPE	LENGTH	WEIGHT
1-A223	1	5	STR	15'-8"	16
1-A224	1	5	STR	16'-3"	17
1-A225	1	5	STR	16'-11"	18
1-A226	1	5	STR	17'-7"	18
1-A227	1	5	STR	18'-3"	19
1-A228	1	5	STR	18'-11"	20
1-A229	1	5	STR	19'-6"	20
1-A230	1	5	STR	20'-2"	21
1-A231	1	5	STR	20'-10"	22
1-A232	1	5	STR	21'-6"	22
1-A233	1	5	STR	22'-1"	23
1-A234	1	5	STR	22'-9"	24
1-A235	1	5	STR	23'-5"	24
1-A236	1	5	STR	24'-1"	25
1-A237	1	5	STR	24'-9"	26
1-A238	1	5	STR	25'-4"	26
1-A239	1	5	STR	26'-0"	27
1-A240	1	5	STR	26'-8"	28
1-A241	1	5	STR	27'-4"	29
1-A242	1	5	STR	28'-0"	29
1-A243	1	5	STR	28'-7"	30
1-A244	1	5	STR	29'-3"	31
1-A245	1	5	STR	29'-11"	31
1-A246	1	5	STR	30'-7"	32
1-A301E	1	5	STR	36'-2"	38
1-A302E	1	5	STR	35'-6"	37
1-A303E	1	5	STR	34'-11"	36
1-A304E	1	5	STR	34'-3"	36
1-A305E	1	5	STR	33'-8"	35
1-A306E	1	5	STR	33'-0"	34
1-A307E	1	5	STR	32'-6"	34
1-A308E	1	5	STR	31'-9"	33
1-A309E	1	5	STR	31'-1"	32
1-A310E	1	5	STR	30'-6"	32
1-A311E	1	5	STR	29'-10"	31
1-A312E	1	5	STR	29'-3"	31
1-A313E	1	5	STR	28'-7"	30
1-A314E	1	5	STR	28'-0"	29
1-A315E	1	5	STR	27'-4"	29
1-A316E	1	5	STR	26'-8"	28
1-A317E	1	5	STR	26'-1"	27
1-A318E	1	5	STR	25'-5"	27
1-A319E	1	5	STR	24'-10"	26
1-A320E	1	5	STR	24'-2"	25
1-A321E	1	5	STR	23'-7"	25

BAR	NO.	SIZE	TYPE	LENGTH	WEIGHT
1-A322E	1	5	STR	22'-11"	24
1-A323E	1	5	STR	22'-3"	23
1-A324E	1	5	STR	21'-8"	23
1-A325E	1	5	STR	21'-0"	22
1-A326E	1	5	STR	20'-5"	21
1-A327E	1	5	STR	19'-9"	21
1-A328E	1	5	STR	19'-1"	20
1-A329E	1	5	STR	18'-6"	19
1-A330E	1	5	STR	17'-10"	19
1-A331E	1	5	STR	17'-3"	18
1-A332E	1	5	STR	16'-7"	17
1-A333E	1	5	STR	16'-0"	17
1-A334E	1	5	STR	15'-4"	16
1-A335E	1	5	STR	14'-9"	15
1-A336E	1	5	STR	14'-1"	15
1-A337E	1	5	STR	13'-6"	14
1-A338E	1	5	STR	12'-10"	13
1-A339E	1	5	STR	12'-3"	13
1-A340E	1	5	STR	11'-7"	12
1-A341E	1	5	STR	11'-0"	11
1-A342E	1	5	STR	10'-4"	11
1-A343E	1	5	STR	9'-9"	10
1-A344E	1	5	STR	9'-1"	9
1-A345E	1	5	STR	8'-6"	9
1-A346E	1	5	STR	7'-10"	8
1-A347E	1	5	STR	7'-3"	8
1-A348E	1	5	STR	6'-7"	7
1-A349E	1	5	STR	6'-0"	6
1-A350E	1	5	STR	5'-4"	6
1-A351E	1	5	STR	4'-9"	5
1-A352E	1	5	STR	4'-1"	4
1-A353E	1	5	STR	3'-6"	4
1-A354E	1	5	STR	2'-10"	3
1-A355E	1	5	STR	2'-3"	2
1-A356E	1	5	STR	1'-10"	2
1-A401	1	5	STR	36'-2"	38
1-A402	1	5	STR	35'-6"	37
1-A403	1	5	STR	34'-11"	36
1-A404	1	5	STR	34'-3"	36
1-A405	1	5	STR	33'-8"	35
1-A406	1	5	STR	33'-0"	34
1-A407	1	5	STR	32'-6"	34
1-A408	1	5	STR	31'-9"	33
1-A409	1	5	STR	31'-1"	32
1-A410	1	5	STR	30'-6"	32

BAR	NO.	SIZE	TYPE	LENGTH	WEIGHT
1-A411	1	5	STR	29'-10"	31
1-A412	1	5	STR	29'-3"	31
1-A413	1	5	STR	28'-7"	30
1-A414	1	5	STR	28'-0"	29
1-A415	1	5	STR	27'-4"	29
1-A416	1	5	STR	26'-8"	28
1-A417	1	5	STR	26'-1"	27
1-A418	1	5	STR	25'-5"	27
1-A419	1	5	STR	24'-10"	26
1-A420	1	5	STR	24'-2"	25
1-A421	1	5	STR	23'-7"	25
1-A422	1	5	STR	22'-11"	24
1-A423	1	5	STR	22'-3"	23
1-A424	1	5	STR	21'-8"	23
1-A425	1	5	STR	21'-0"	22
1-A426	1	5	STR	20'-5"	21
1-A427	1	5	STR	19'-9"	21
1-A428	1	5	STR	19'-1"	20
1-A429	1	5	STR	18'-6"	19
1-A430	1	5	STR	17'-10"	19
1-A431	1	5	STR	17'-3"	18
1-A432	1	5	STR	16'-7"	17
1-A433	1	5	STR	16'-0"	17
1-A434	1	5	STR	15'-4"	16
1-A435	1	5	STR	14'-9"	15
1-A436	1	5	STR	14'-1"	15
1-A437	1	5	STR	13'-6"	14
1-A438	1	5	STR	12'-10"	13
1-A439	1	5	STR	12'-3"	13
1-A440	1	5	STR	11'-7"	12
1-A441	1	5	STR	11'-0"	11
1-A442	1	5	STR	10'-4"	11
1-A443	1	5	STR	9'-9"	10
1-A444	1	5	STR	9'-1"	9
1-A445	1	5	STR	8'-6"	9
1-A446	1	5	STR	7'-10"	8
1-A447	1	5	STR	7'-3"	8
1-A448	1	5	STR	6'-7"	7
1-A449	1	5	STR	6'-0"	6
1-A450	1	5	STR	5'-4"	6
1-A451	1	5	STR	4'-9"	5
1-A452	1	5	STR	4'-1"	4
1-A453	1	5	STR	3'-6"	4
1-A454	1	5	STR	2'-10"	3
1-A455	1	5	STR	2'-3"	2
1-A456	1	5	STR	1'-10"	2

BAR	NO.	SIZE	TYPE	LENGTH	WEIGHT
1-B1E	156	4	STR	23'-4"	2432
1-B2E	78	7	STR	25'-10"	4119
1-B3E	25	7	STR	28'-6"	1456
1-B4E	196	4	STR	48'-9"	6383
1-G1E	1	5	STR	38'-9"	40
1-G2E	1	5	STR	46'-11"	49
1-J1E	88	4	9	1'-5"	83
1-K1E	9	6	STR	7'-3"	98
1-K2E	4	8	2	17'-3"	184
1-K3E	4	8	1	13'-5"	143
1-K4	6	4	STR	8'-8"	35
1-K5	12	4	STR	9'-11"	79
1-K6	6	4	STR	9'-0"	36
1-K7	6	4	STR	6'-6"	26
1-K8E	9	6	STR	10'-1"	136
1-K9E	4	8	1	14'-9"	158
1-K10E	4	8	2	19'-11"	213
1-S1E	39	4	3	5'-1"	132
1-S2E	39	5	4	5'-11"	241
1-S3	78	4	5	3'-4"	174
1-U1	6	4	6	13'-3"	53
1-U2	15	4	6	15'-3"	153
1-Z1	10	4	7	7'-0"	47
1-Z2	10	4	8	13'-8"	91

REINFORCING STEEL	14202 LB
EPOXY COATED REINFORCING STEEL	28629 LB
CLASS "AA" CONCRETE	
POUR #1	83.0 CY
POUR #2	125.4 CY
POUR #3	16.3 CY

"E" INDICATES EPOXY COATED REINFORCING STEEL

SUPERSTRUCTURE REINFORCING STEEL LENGTHS ARE BASED ON THE FOLLOWING MINIMUM SPLICE LENGTHS

BAR SIZE	SUPERSTRUCTURE EXCEPT APPROACH SLABS, PARAPET, AND BARRIER RAIL		APPROACH SLABS		PARAPET AND BARRIER RAIL
	EPOXY COATED	UNCOATED	EPOXY COATED	UNCOATED	
#4	2'-0"	1'-9"	2'-0"	1'-9"	2'-9"
#5	2'-6"	2'-2"	2'-6"	2'-2"	3'-5"
#6	3'-0"	2'-7"	3'-10"	2'-7"	4'-4"
#7	5'-3"	3'-6"			
#8	6'-10"	4'-7"			

PROJECT NO. U-2524C

GUILFORD COUNTY

STATION: 9+75.28 -RPDY4-

SHEET 1 OF 4

STATE OF NORTH CAROLINA
DEPARTMENT OF TRANSPORTATION
RALEIGH

SUPERSTRUCTURE

BILL OF MATERIAL
(2 SPAN CONTINUOUS UNIT 1)
(SPANS 1 & 2)

-RAMP D-

REVISIONS						SHEET NO.
NO.	BY:	DATE:	NO.	BY:	DATE:	S-811
1			3			TOTAL SHEETS
2			4			836

PLANS PREPARED BY:

SIMPSON ENGINEERS & ASSOCIATES
5640 Dillard Drive
Suite 200
Cary, NC 27518
(919) 852-0468
(919) 852-0598 (Fax)
www.simpsonengr.com
LICENSURE NO. C-2521

NORTH CAROLINA PROFESSIONAL SEAL 023906 ENGINEER MARK A. AVERETTE
6-5-2013

DRAWN BY: R. SEALEY DATE: 4-13
CHECKED BY: M. AVERETTE DATE: 4-13
DESIGN ENGINEER OF RECORD: M. AVERETTE DATE: 4-13

6/5/2013 2:38:59 PM G:\Projects\2011\U-2524 (Guilford Co)\Structures\Ramp D\Drawings\Final\U-2524_sd_rpd_bm.dgn

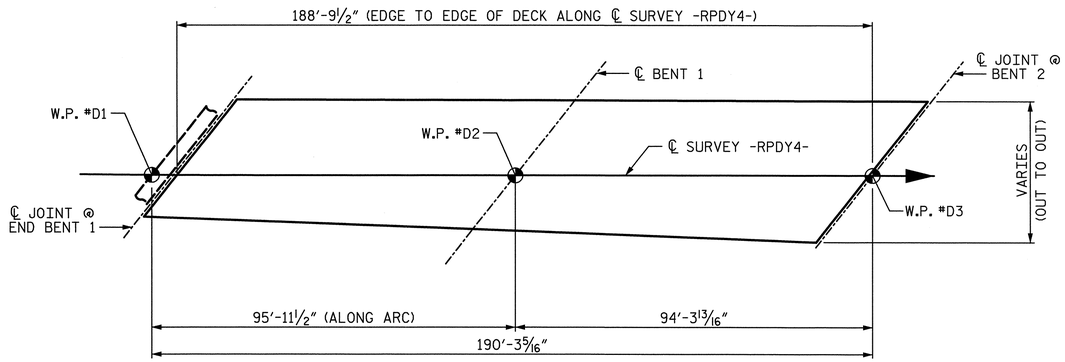

SPAN 1 SPAN 2

LAYOUT FOR COMPUTING AREA OF REINFORCED CONCRETE DECK SLAB FOR 2 SPAN CONTINUOUS UNIT 1

(SQ. FT. = 6,418)

GROOVING BRIDGE FLOORS		
APPROACH SLABS	582	SQ. FT.
BRIDGE DECK	5225	SQ. FT.
TOTAL	5807	SQ. FT.

BAR TYPES

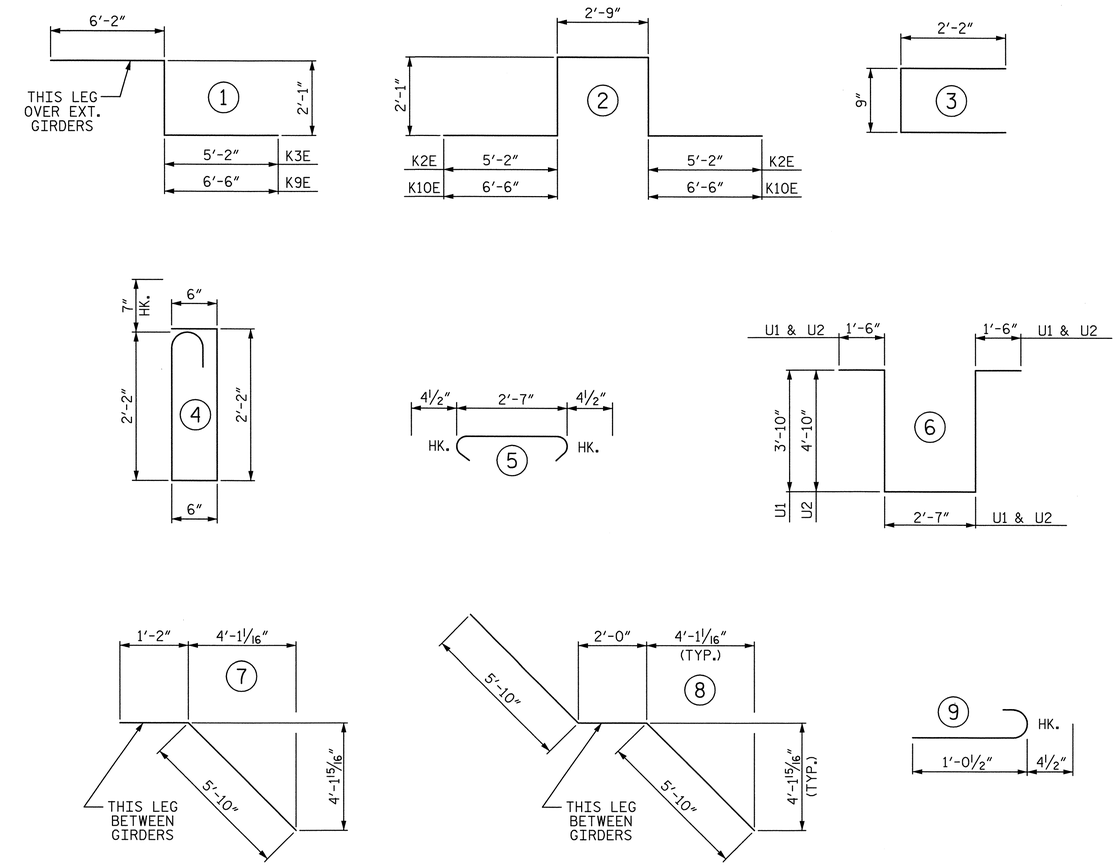

ALL BAR DIMENSIONS ARE OUT TO OUT

PROJECT NO. U-2524C

GUILFORD COUNTY

STATION: 9+75.28 -RPDY4-

SHEET 2 OF 4

STATE OF NORTH CAROLINA
DEPARTMENT OF TRANSPORTATION
RALEIGH

SUPERSTRUCTURE

BILL OF MATERIAL
(2 SPAN CONTINUOUS UNIT 1)
(SPANS 1 & 2)

-RAMP D-

PLANS PREPARED BY:
SIMPSON ENGINEERS & ASSOCIATES
5640 Dillard Drive
Suite 200
Cary, NC 27518
(919) 852-0468
(919) 852-0598 (Fax)
www.simpsonengr.com
LICENSURE NO. C-2521

NORTH CAROLINA PROFESSIONAL SEAL 023908 ENGINEER MARK A. AVERETTE
6-5-2013

REVISIONS						SHEET NO.
NO.	BY:	DATE:	NO.	BY:	DATE:	S-812
1			3			TOTAL SHEETS
2			4			836

DRAWN BY: R. SEALEY DATE: 4-13
CHECKED BY: M. AVERETTE DATE: 4-13
DESIGN ENGINEER OF RECORD: M. AVERETTE DATE: 4-13

6/5/2013 2:39:04 PM G:\Projects\2011\U-2524 (Guilford Co)\Structures\Ramp D\Drawings\Final\U-2524_sd_rpd_bm.dgn

REINFORCING BAR SCHEDULE FOR 2 SPAN CONTINUOUS UNIT 2
(SPANS 3 & 4)

BAR	NO.	SIZE	TYPE	LENGTH	WEIGHT	BAR	NO.	SIZE	TYPE	LENGTH	WEIGHT	BAR	NO.	SIZE	TYPE	LENGTH	WEIGHT
2-A1E	335	5	STR	36'-11"	12899	2-A144E	2	5	STR	35'-6"	74	2-A244	2	5	STR	35'-6"	74
2-A2	335	5	STR	36'-11"	12899	2-A145E	2	5	STR	36'-4"	76	2-A245	2	5	STR	36'-4"	76
2-A101E	2	5	STR	1'-8"	3	2-A201	2	5	STR	1'-8"	3	2-B1E	156	4	STR	29'-3"	3048
2-A102E	2	5	STR	2'-6"	5	2-A202	2	5	STR	2'-6"	5	2-B2E	78	7	STR	30'-10"	4916
2-A103E	2	5	STR	3'-3"	7	2-A203	2	5	STR	3'-3"	7	2-B3E	25	7	STR	36'-0"	1840
2-A104E	2	5	STR	4'-0"	8	2-A204	2	5	STR	4'-0"	8	2-B4	225	5	STR	49'-6"	11616
2-A105E	2	5	STR	4'-10"	10	2-A205	2	5	STR	4'-10"	10						
2-A106E	2	5	STR	5'-7"	12	2-A206	2	5	STR	5'-7"	12	2-G1E	2	5	STR	47'-0"	98
2-A107E	2	5	STR	6'-5"	13	2-A207	2	5	STR	6'-5"	13						
2-A108E	2	5	STR	7'-2"	15	2-A208	2	5	STR	7'-2"	15	2-J1E	96	4	11	1'-5"	91
2-A109E	2	5	STR	8'-0"	17	2-A209	2	5	STR	8'-0"	17						
2-A110E	2	5	STR	8'-9"	18	2-A210	2	5	STR	8'-9"	18	2-K1E	18	6	STR	6'-10"	185
2-A111E	2	5	STR	9'-7"	20	2-A211	2	5	STR	9'-7"	20	2-K2E	12	6	7	11'-10"	213
2-A112E	2	5	STR	10'-4"	22	2-A212	2	5	STR	10'-4"	22	2-K3E	8	8	1	15'-5"	329
2-A113E	2	5	STR	11'-1"	23	2-A213	2	5	STR	11'-1"	23	2-K4E	8	8	2	19'-2"	409
2-A114E	2	5	STR	11'-11"	25	2-A214	2	5	STR	11'-11"	25	2-K5	30	4	STR	10'-6"	210
2-A115E	2	5	STR	12'-8"	26	2-A215	2	5	STR	12'-8"	26	2-K6	6	4	STR	7'-1"	28
2-A116E	2	5	STR	13'-6"	28	2-A216	2	5	STR	13'-6"	28	2-K7	6	4	STR	6'-8"	27
2-A117E	2	5	STR	14'-3"	30	2-A217	2	5	STR	14'-3"	30						
2-A118E	2	5	STR	15'-1"	31	2-A218	2	5	STR	15'-1"	31	2-S1E	36	4	3	6'-7"	158
2-A119E	2	5	STR	15'-10"	33	2-A219	2	5	STR	15'-10"	33	2-S2E	36	5	4	5'-11"	222
2-A120E	2	5	STR	16'-8"	35	2-A220	2	5	STR	16'-8"	35	2-S3	126	4	6	4'-7"	386
2-A121E	2	5	STR	17'-5"	36	2-A221	2	5	STR	17'-5"	36						
2-A122E	2	5	STR	18'-3"	38	2-A222	2	5	STR	18'-3"	38	2-U1	6	4	5	12'-11"	52
2-A123E	2	5	STR	19'-0"	40	2-A223	2	5	STR	19'-0"	40	2-U2	18	4	8	19'-10"	238
2-A124E	2	5	STR	19'-9"	41	2-A224	2	5	STR	19'-9"	41						
2-A125E	2	5	STR	20'-7"	43	2-A225	2	5	STR	20'-7"	43	2-Z1	14	4	9	7'-6"	70
2-A126E	2	5	STR	21'-4"	45	2-A226	2	5	STR	21'-4"	45	2-Z2	14	4	10	14'-9"	138
2-A127E	2	5	STR	22'-2"	46	2-A227	2	5	STR	22'-2"	46						
2-A128E	2	5	STR	22'-11"	48	2-A228	2	5	STR	22'-11"	48	REINFORCING STEEL					27447 LB
2-A129E	2	5	STR	23'-9"	50	2-A229	2	5	STR	23'-9"	50						
2-A130E	2	5	STR	24'-6"	51	2-A230	2	5	STR	24'-6"	51	EPOXY COATED					
2-A131E	2	5	STR	25'-4"	53	2-A231	2	5	STR	25'-4"	53	REINFORCING STEEL					26191 LB
2-A132E	2	5	STR	26'-1"	54	2-A232	2	5	STR	26'-1"	54						
2-A133E	2	5	STR	26'-10"	56	2-A233	2	5	STR	26'-10"	56	CLASS "AA" CONCRETE					
2-A134E	2	5	STR	27'-8"	58	2-A234	2	5	STR	27'-8"	58	POUR #1					119.5 CY
2-A135E	2	5	STR	28'-5"	59	2-A235	2	5	STR	28'-5"	59	POUR #2					166.7 CY
2-A136E	2	5	STR	29'-3"	61	2-A236	2	5	STR	29'-3"	61	POUR #3					16.5 CY
2-A137E	2	5	STR	30'-0"	63	2-A237	2	5	STR	30'-0"	63						
2-A138E	2	5	STR	30'-10"	64	2-A238	2	5	STR	30'-10"	64						
2-A139E	2	5	STR	31'-7"	66	2-A239	2	5	STR	31'-7"	66						
2-A140E	2	5	STR	32'-5"	68	2-A240	2	5	STR	32'-5"	68						
2-A141E	2	5	STR	33'-2"	69	2-A241	2	5	STR	33'-2"	69						
2-A142E	2	5	STR	34'-0"	71	2-A242	2	5	STR	34'-0"	71						
2-A143E	2	5	STR	34'-9"	72	2-A243	2	5	STR	34'-9"	72						

"E" INDICATES EPOXY COATED REINFORCING STEEL

BAR TYPES

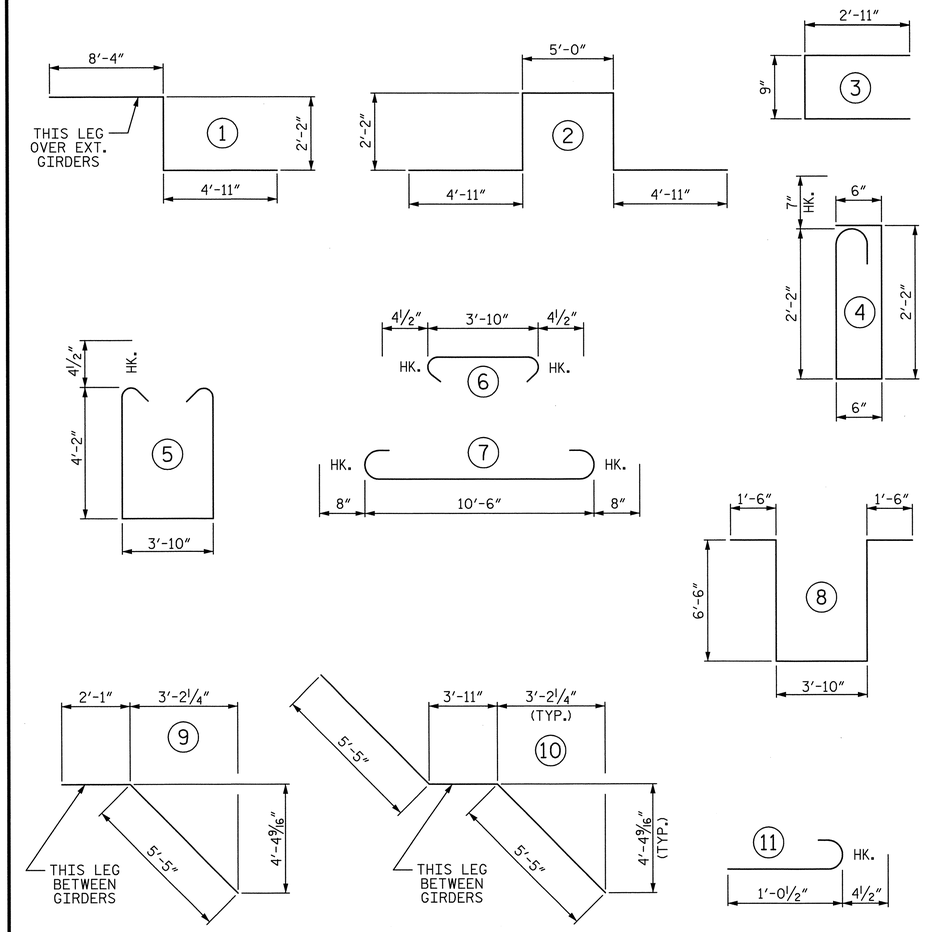

ALL BAR DIMENSIONS ARE OUT TO OUT

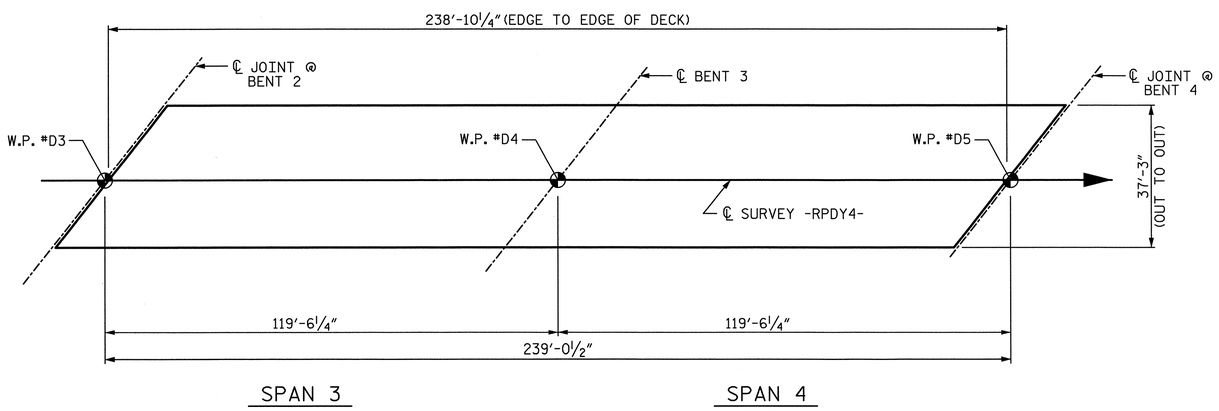

LAYOUT FOR COMPUTING AREA OF REINFORCED CONCRETE DECK SLAB FOR 2 SPAN CONTINUOUS UNIT 2

(SQ. FT. = 8,898)

SUPERSTRUCTURE REINFORCING STEEL LENGTHS ARE BASED ON THE FOLLOWING MINIMUM SPLICE LENGTHS

BAR SIZE	SUPERSTRUCTURE EXCEPT APPROACH SLABS, PARAPET, AND BARRIER RAIL		APPROACH SLABS		PARAPET AND BARRIER RAIL
	EPOXY COATED	UNCOATED	EPOXY COATED	UNCOATED	
#4	2'-0"	1'-9"	2'-0"	1'-9"	2'-9"
#5	2'-6"	2'-2"	2'-6"	2'-2"	3'-5"
#6	3'-0"	2'-7"	3'-10"	2'-7"	4'-4"
#7	5'-3"	3'-6"			
#8	6'-10"	4'-7"			

GROOVING BRIDGE FLOORS

BRIDGE DECK	7372	SQ. FT.

PROJECT NO. U-2524C

GUILFORD COUNTY

STATION: 9+75.28 -RPDY4-

SHEET 3 OF 4

STATE OF NORTH CAROLINA
DEPARTMENT OF TRANSPORTATION
RALEIGH

SUPERSTRUCTURE

BILL OF MATERIAL
(2 SPAN CONTINUOUS UNIT 2)
(SPANS 3 & 4)

-RAMP D-

REVISIONS						SHEET NO.
NO.	BY:	DATE:	NO.	BY:	DATE:	S-813
1			3			TOTAL SHEETS
2			4			836

PLANS PREPARED BY:

SIMPSON ENGINEERS & ASSOCIATES
5640 Dillard Drive
Suite 200
Cary, NC 27518
(919) 852-0468
(919) 852-0598 (Fax)
www.simpsonengr.com
LICENSURE NO. C-2521

NORTH CAROLINA PROFESSIONAL SEAL 023906 ENGINEER MARK A. AVERETTE
6-5-2013

DRAWN BY:	R. SEALEY	DATE:	4-13
CHECKED BY:	M. AVERETTE	DATE:	4-13
DESIGN ENGINEER OF RECORD:	M. AVERETTE	DATE:	4-13

6/5/2013 2:39:08 PM G:\Projects\2011\U-2524 (Guilford Co)\Structures\Ramp D\Drawings\Final\U-2524_sd_rpd_bm.dgn

REINFORCING BAR SCHEDULE FOR 3 SPAN CONTINUOUS UNIT 3
(SPANS 5, 6, & 7)

BAR	NO.	SIZE	TYPE	LENGTH	WEIGHT	BAR	NO.	SIZE	TYPE	LENGTH	WEIGHT	BAR	NO.	SIZE	TYPE	LENGTH	WEIGHT
3-A1E	524	5	STR	36′-11″	20176	3-A144E	2	5	STR	35′-9″	75	3-A244	2	5	STR	35′-9″	75
3-A2	524	5	STR	36′-11″	20176	3-A145E	2	5	STR	36′-6″	76	3-A245	2	5	STR	36′-6″	76
3-A101E	2	5	STR	1′-11″	4	3-A201	2	5	STR	1′-11″	4	3-B1E	156	4	STR	29′-4″	3057
3-A102E	2	5	STR	2′-8″	6	3-A202	2	5	STR	2′-8″	6	3-B2E	156	7	STR	30′-10″	9832
3-A103E	2	5	STR	3′-5″	7	3-A203	2	5	STR	3′-5″	7	3-B3E	50	7	STR	36′-0″	3679
3-A104E	2	5	STR	4′-3″	9	3-A204	2	5	STR	4′-3″	9	3-B4E	52	4	STR	24′-5″	848
3-A105E	2	5	STR	5′-0″	10	3-A205	2	5	STR	5′-0″	10	3-B5	315	5	STR	52′-11″	17386
3-A106E	2	5	STR	5′-10″	12	3-A206	2	5	STR	5′-10″	12						
3-A107E	2	5	STR	6′-7″	14	3-A207	2	5	STR	6′-7″	14	3-G1E	2	5	STR	47′-0″	98
3-A108E	2	5	STR	7′-5″	15	3-A208	2	5	STR	7′-5″	15						
3-A109E	2	5	STR	8′-2″	17	3-A209	2	5	STR	8′-2″	17	3-J1E	96	4	11	1′-5″	91
3-A110E	2	5	STR	9′-0″	19	3-A210	2	5	STR	9′-0″	19						
3-A111E	2	5	STR	9′-9″	20	3-A211	2	5	STR	9′-9″	20	3-K1E	18	6	STR	6′-10″	185
3-A112E	2	5	STR	10′-6″	22	3-A212	2	5	STR	10′-6″	22	3-K2E	12	6	7	11′-10″	213
3-A113E	2	5	STR	11′-4″	24	3-A213	2	5	STR	11′-4″	24	3-K3E	8	8	1	15′-5″	329
3-A114E	2	5	STR	12′-1″	25	3-A214	2	5	STR	12′-1″	25	3-K4E	8	8	2	19′-2″	409
3-A115E	2	5	STR	12′-11″	27	3-A215	2	5	STR	12′-11″	27	3-K5	60	4	STR	10′-6″	421
3-A116E	2	5	STR	13′-8″	29	3-A216	2	5	STR	13′-8″	29	3-K6	12	4	STR	7′-1″	57
3-A117E	2	5	STR	14′-6″	30	3-A217	2	5	STR	14′-6″	30	3-K7	12	4	STR	6′-8″	53
3-A118E	2	5	STR	15′-3″	32	3-A218	2	5	STR	15′-3″	32						
3-A119E	2	5	STR	16′-1″	34	3-A219	2	5	STR	16′-1″	34	3-S1E	36	4	3	6′-7″	158
3-A120E	2	5	STR	16′-10″	35	3-A220	2	5	STR	16′-10″	35	3-S2E	36	5	4	5′-11″	222
3-A121E	2	5	STR	17′-7″	37	3-A221	2	5	STR	17′-7″	37	3-S3	252	4	6	4′-7″	772
3-A122E	2	5	STR	18′-5″	38	3-A222	2	5	STR	18′-5″	38						
3-A123E	2	5	STR	19′-2″	40	3-A223	2	5	STR	19′-2″	40	3-U1	12	4	5	12′-11″	104
3-A124E	2	5	STR	20′-0″	42	3-A224	2	5	STR	20′-0″	42	3-U2	36	4	8	19′-10″	477
3-A125E	2	5	STR	20′-9″	43	3-A225	2	5	STR	20′-9″	43						
3-A126E	2	5	STR	21′-7″	45	3-A226	2	5	STR	21′-7″	45	3-Z1	28	4	9	7′-6″	140
3-A127E	2	5	STR	22′-4″	47	3-A227	2	5	STR	22′-4″	47	3-Z2	28	4	10	14′-9″	276
3-A128E	2	5	STR	23′-2″	48	3-A228	2	5	STR	23′-2″	48						
3-A129E	2	5	STR	23′-11″	50	3-A229	2	5	STR	23′-11″	50	REINFORCING STEEL					21489 LB
3-A130E	2	5	STR	24′-9″	52	3-A230	2	5	STR	24′-9″	52						
3-A131E	2	5	STR	25′-6″	53	3-A231	2	5	STR	25′-6″	53	EPOXY COATED					
3-A132E	2	5	STR	26′-3″	55	3-A232	2	5	STR	26′-3″	55	REINFORCING STEEL					61276 LB
3-A133E	2	5	STR	27′-1″	56	3-A233	2	5	STR	27′-1″	56						
3-A134E	2	5	STR	27′-10″	58	3-A234	2	5	STR	27′-10″	58	CLASS "AA" CONCRETE					
3-A135E	2	5	STR	28′-8″	60	3-A235	2	5	STR	28′-8″	60	POUR #1					119.5 CY
3-A136E	2	5	STR	29′-5″	61	3-A236	2	5	STR	29′-5″	61	POUR #2					160.4 CY
3-A137E	2	5	STR	30′-3″	63	3-A237	2	5	STR	30′-3″	63	POUR #3					167.2 CY
3-A138E	2	5	STR	31′-0″	65	3-A238	2	5	STR	31′-0″	65	POUR #4					16.5 CY
3-A139E	2	5	STR	31′-10″	66	3-A239	2	5	STR	31′-10″	66						
3-A140E	2	5	STR	32′-7″	68	3-A240	2	5	STR	32′-7″	68						
3-A141E	2	5	STR	33′-4″	70	3-A241	2	5	STR	33′-4″	70						
3-A142E	2	5	STR	34′-2″	71	3-A242	2	5	STR	34′-2″	71						
3-A143E	2	5	STR	34′-11″	73	3-A243	2	5	STR	34′-11″	73						

"E" INDICATES EPOXY COATED REINFORCING STEEL

BAR TYPES

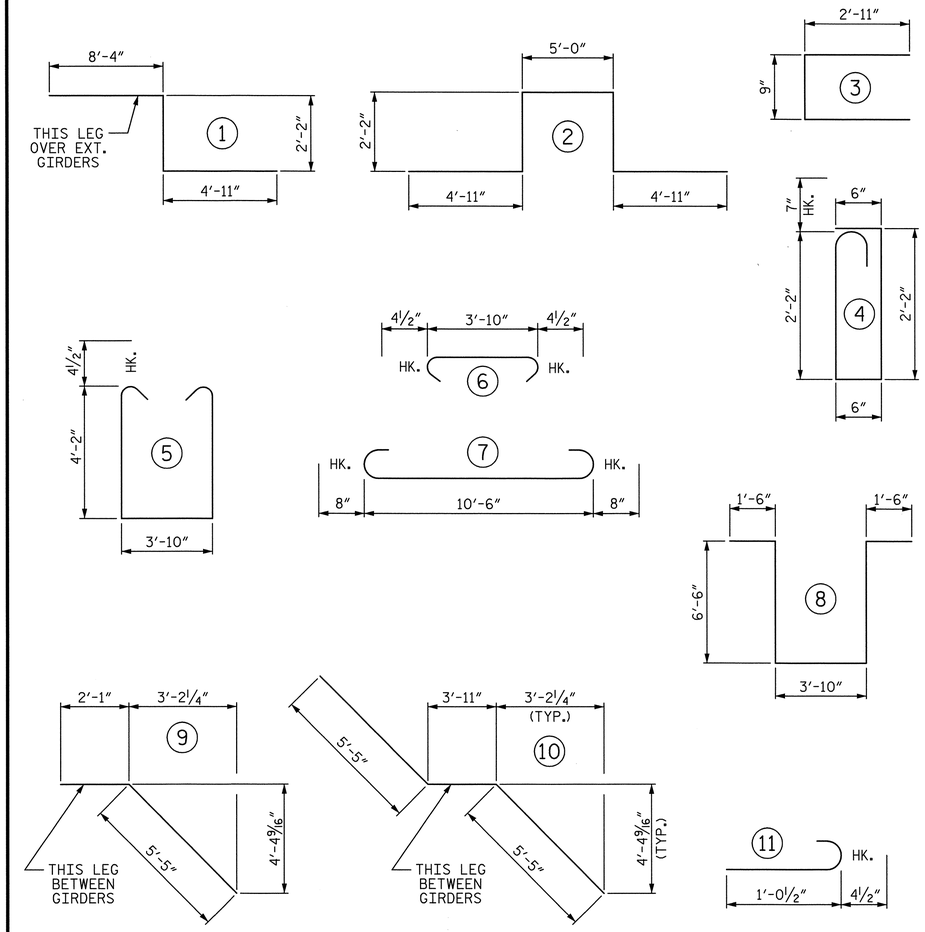

ALL BAR DIMENSIONS ARE OUT TO OUT

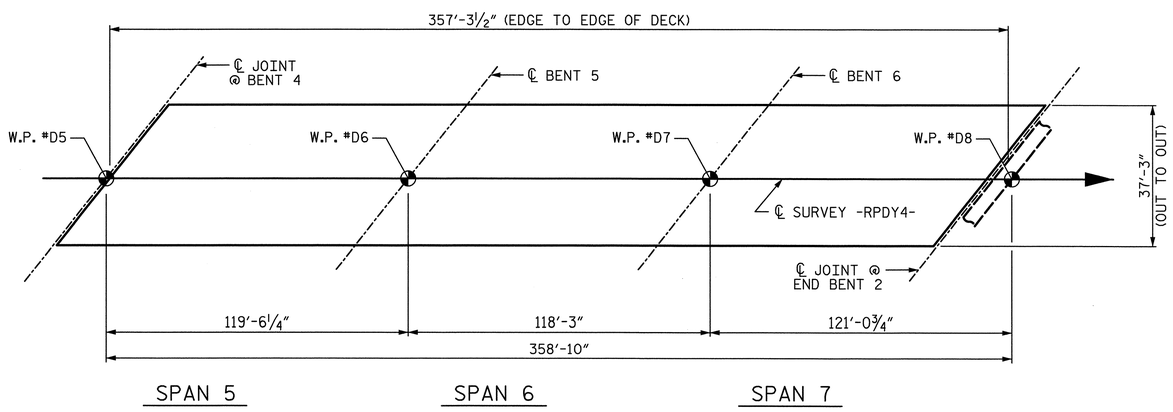

LAYOUT FOR COMPUTING AREA OF REINFORCED CONCRETE DECK SLAB FOR 3 SPAN CONTINUOUS UNIT 3

(SQ. FT. = 13,310)

SUPERSTRUCTURE REINFORCING STEEL LENGTHS ARE BASED ON THE FOLLOWING MINIMUM SPLICE LENGTHS

BAR SIZE	SUPERSTRUCTURE EXCEPT APPROACH SLABS, PARAPET, AND BARRIER RAIL		APPROACH SLABS		PARAPET AND BARRIER RAIL
	EPOXY COATED	UNCOATED	EPOXY COATED	UNCOATED	
#4	2′-0″	1′-9″	2′-0″	1′-9″	2′-9″
#5	2′-6″	2′-2″	2′-6″	2′-2″	3′-5″
#6	3′-0″	2′-7″	3′-10″	2′-7″	4′-4″
#7	5′-3″	3′-6″			
#8	6′-10″	4′-7″			

GROOVING BRIDGE FLOORS

APPROACH SLAB	729	SQ. FT.
BRIDGE DECK	11044	SQ. FT.
TOTAL	11773	SQ. FT.

PROJECT NO. U-2524C
GUILFORD COUNTY
STATION: 9+75.28 -RPDY4-

SHEET 4 OF 4

STATE OF NORTH CAROLINA
DEPARTMENT OF TRANSPORTATION
RALEIGH

SUPERSTRUCTURE

BILL OF MATERIAL
(3 SPAN CONTINUOUS UNIT 3)
(SPANS 5, 6, & 7)

-RAMP D-

PLANS PREPARED BY:
SIMPSON ENGINEERS & ASSOCIATES
5640 Dillard Drive
Suite 200
Cary, NC 27518
(919) 852-0468
(919) 852-0598 (Fax)
www.simpsonengr.com
LICENSURE NO. C-2521

NORTH CAROLINA PROFESSIONAL SEAL 023906 ENGINEER MARK A. AVERETTE
6-5-2013

REVISIONS								SHEET NO.
NO.	BY:	DATE:	NO.	BY:	DATE:			S-814
1			3					TOTAL SHEETS
2			4					836

DRAWN BY: R. SEALEY DATE: 4-13
CHECKED BY: M. AVERETTE DATE: 4-13
DESIGN ENGINEER OF RECORD: M. AVERETTE DATE: 4-13

6/5/2013 2:39:12 PM G:\Projects\2011\U-2524 (Guilford Co)\Structures\Ramp D\Drawings\Final\U-2524_sd_rpd_bm.dgn

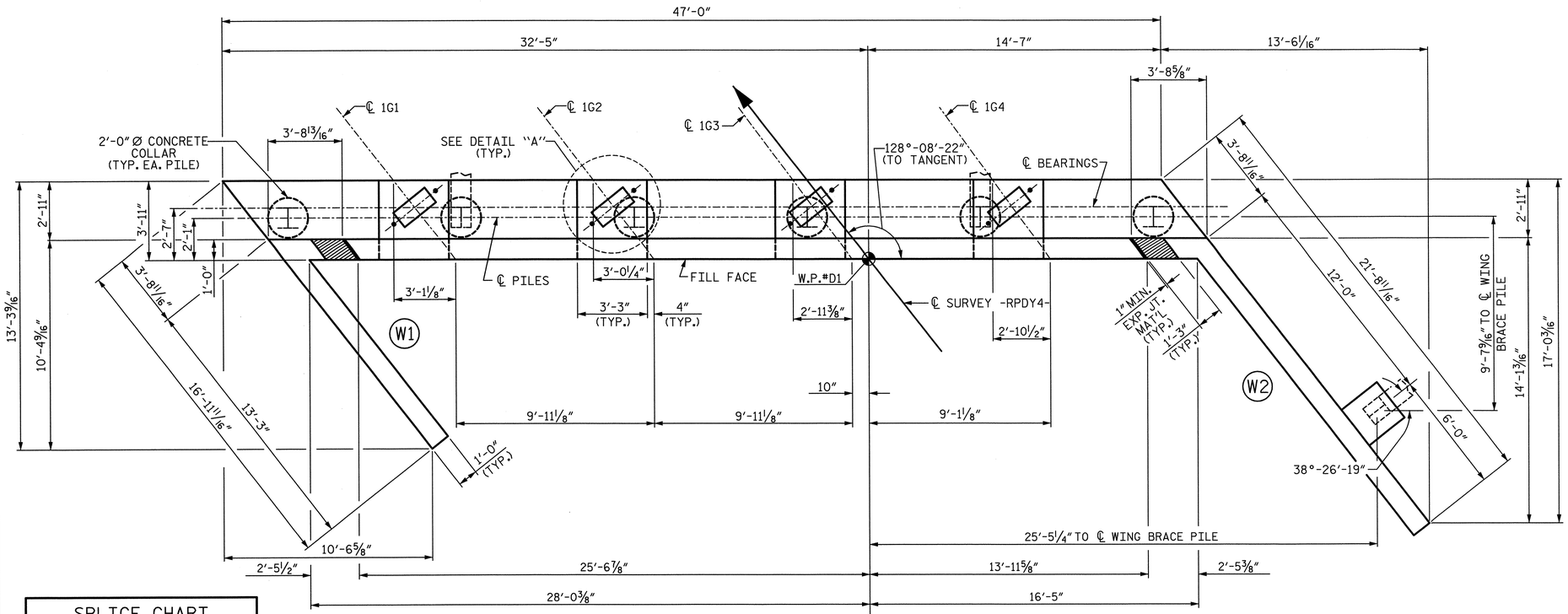

PLAN

SPLICE CHART
#4 B2 SPLICE LENGTH = 2'-5"
#4 K1 SPLICE LENGTH = 2'-5"

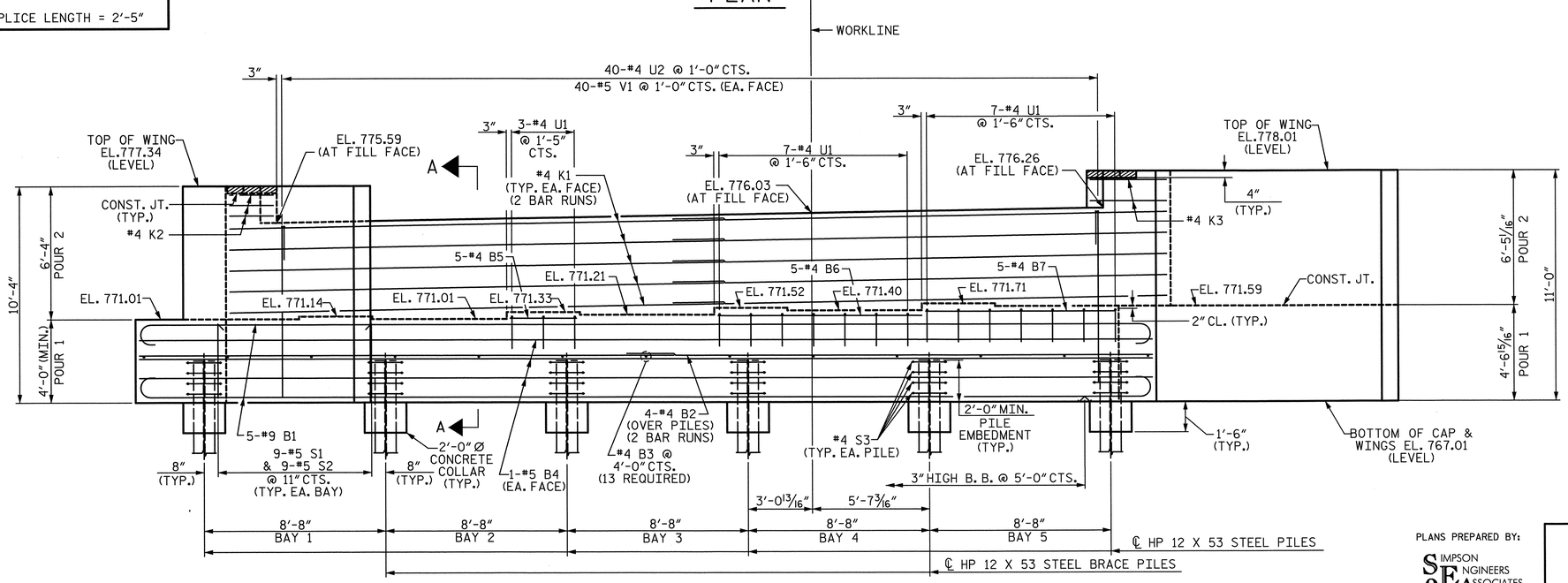

ELEVATION

FOR CLARITY, WING BRACE PILE NOT SHOWN

NOTES:

STIRRUPS AND "U" BARS IN CAP MAY BE SHIFTED AS NECESSARY TO CLEAR ANCHOR BOLTS.

BACKWALL SHALL BE PLACED BEFORE APPLYING THE EPOXY PROTECTIVE COATING.

THE CONCRETE IN THE SHADED AREA OF THE WING SHALL BE POURED AFTER THE BARRIER RAIL IS CAST IF SLIP FORMING IS USED.

THE TOP SURFACE AREAS OF THE END BENT CAPS SHALL BE CURED IN ACCORDANCE WITH THE STANDARD SPECIFICATIONS EXCEPT THE MEMBRANE CURING COMPOUND METHOD SHALL NOT BE USED.

THE TOP SURFACE OF THE CAP EXCEPT THE BRIDGE SEAT BUILDUPS SHALL BE SLOPED TRANSVERSELY FROM THE FILL FACE TO THE BACK FACE AT THE RATE OF 2%.

THE CONTRACTOR SHALL PROVIDE FOR INSTALLATION OF THE 4" DIAMETER DRAIN PIPE THROUGH THE WING WALL AS REQUIRED FOR REINFORCED BRIDGE APPROACH FILLS, SEE THE ROADWAY PLANS. REINFORCING STEEL IN THE WING WALL MAY BE SHIFTED AS NECESSARY TO CLEAR THE DRAIN PIPE.

SEE GENERAL DRAWING "FOUNDATION LAYOUT" FOR ADDITIONAL NOTES FOR DRIVING PILES.

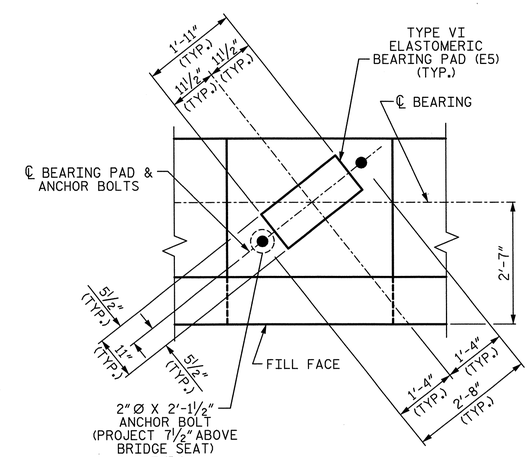

DETAIL "A"

TYP. EA. GIRDER

PROJECT NO. U-2524C

GUILFORD COUNTY

STATION: 9+75.28 -RPDY4-

SHEET 1 OF 3

STATE OF NORTH CAROLINA
DEPARTMENT OF TRANSPORTATION
RALEIGH

SUBSTRUCTURE

END BENT 1

-RAMP D-

REVISIONS						SHEET NO.
NO.	BY:	DATE:	NO.	BY:	DATE:	S-815
1			3			TOTAL SHEETS
2			4			836

PLANS PREPARED BY:

SIMPSON ENGINEERING & ASSOCIATES
5640 Dillard Drive
Suite 200
Cary, NC 27518
(919) 852-0468
(919) 852-0598 (Fax)
www.simpsonengr.com
LICENSURE NO. C-2521

NORTH CAROLINA PROFESSIONAL SEAL 023906 ENGINEER MARK A. AVERETTE
6-5-2013

DRAWN BY:	D. G. VESTER	DATE:	4-13
CHECKED BY:	M. AVERETTE	DATE:	4-13
DESIGN ENGINEER OF RECORD:	M. AVERETTE	DATE:	4-13

6/5/2013 2:39:18 PM G:\Projects\2011\U-2524 (Guilford Co)\Structures\Ramp D\Drawings\Final\U-2524_sd_rpd_eb1.dgn

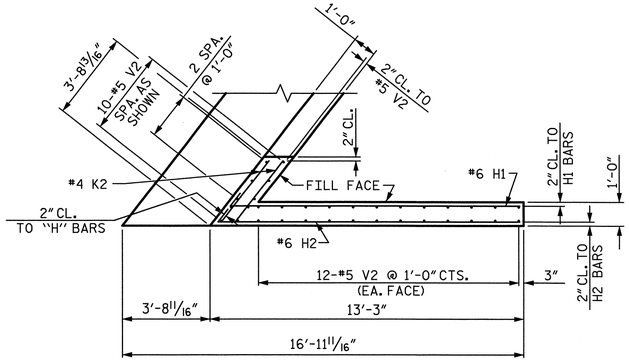

PLAN OF WING (W1)

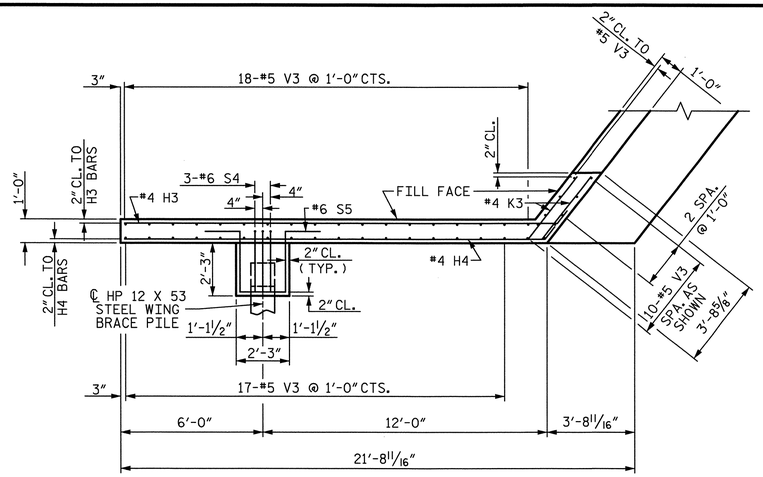

PLAN OF WING (W2)

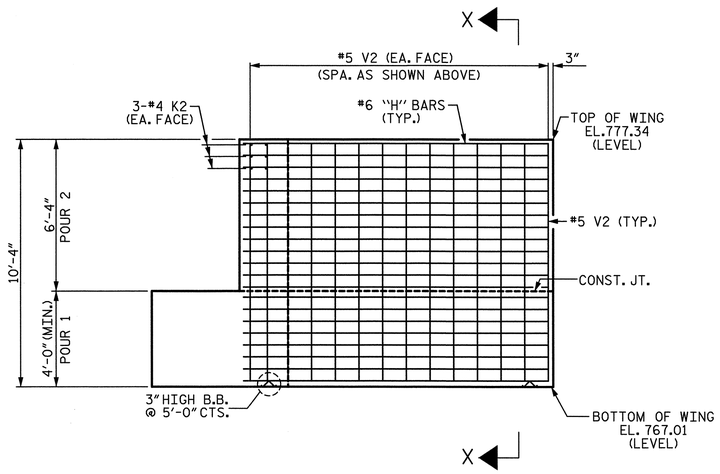

ELEVATION OF WING (W1)

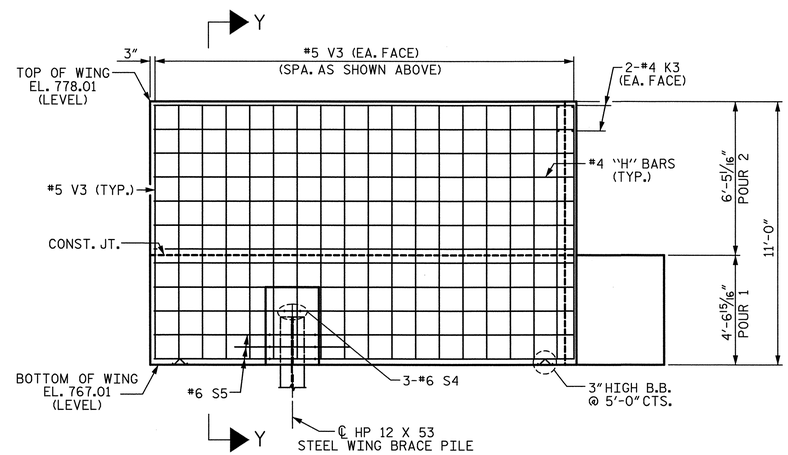

ELEVATION OF WING (W2)

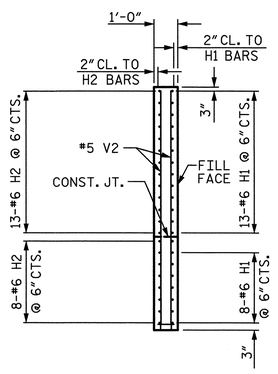

SECTION X-X

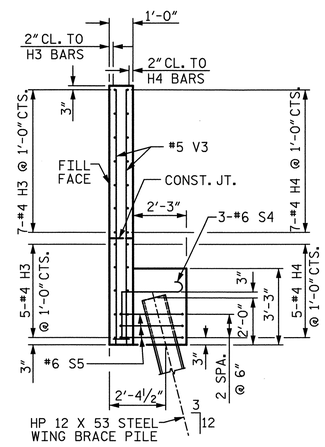

SECTION Y-Y

PROJECT NO. U-2524C

GUILFORD COUNTY

STATION: 9+75.28 -RPDY4-

SHEET 2 OF 3

STATE OF NORTH CAROLINA
DEPARTMENT OF TRANSPORTATION
RALEIGH

SUBSTRUCTURE

END BENT 1

-RAMP D-

REVISIONS								SHEET NO.
NO.	BY:	DATE:	NO.	BY:	DATE:			S-816
1			3					TOTAL SHEETS
2			4					836

PLANS PREPARED BY:

SIMPSON ENGINEERS & ASSOCIATES
5640 Dillard Drive
Suite 200
Cary, NC 27518
(919) 852-0468
(919) 852-0598 (Fax)
www.simpsonengr.com
LICENSURE NO. C-2521

NORTH CAROLINA PROFESSIONAL SEAL 023906 ENGINEER MARK A. AVERETTE
6-5-2013

DRAWN BY:	D. G. VESTER	DATE:	4-13
CHECKED BY:	M. AVERETTE	DATE:	4-13
DESIGN ENGINEER OF RECORD:	M. AVERETTE	DATE:	4-13

6/5/2013 2:39:22 PM G:\Projects\2011\U-2524 (Guilford Co)\Structures\Ramp D\Drawings\Final\U-2524_sd_rpd_ebt1.dgn

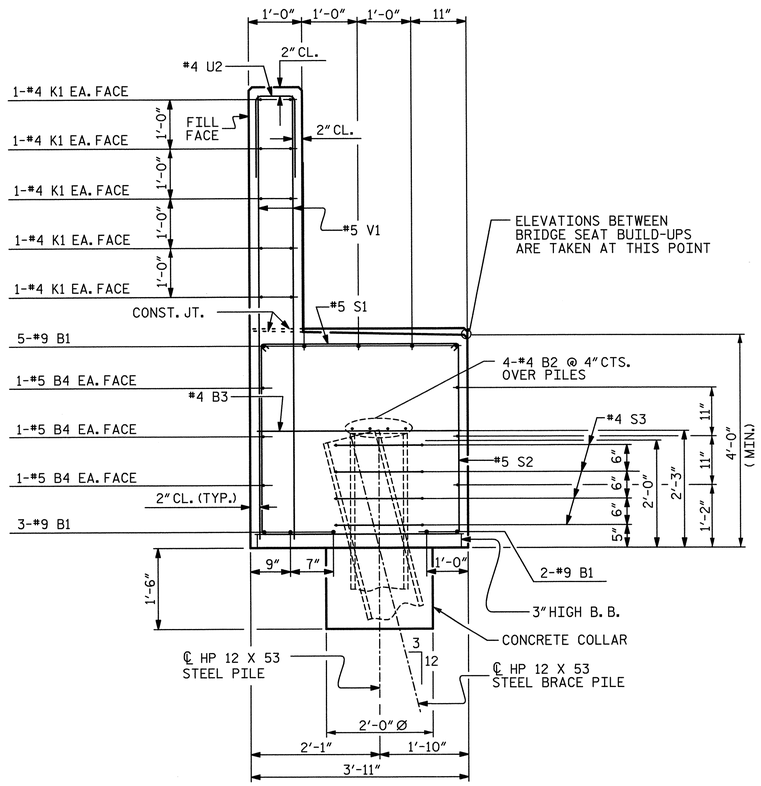

SECTION A-A

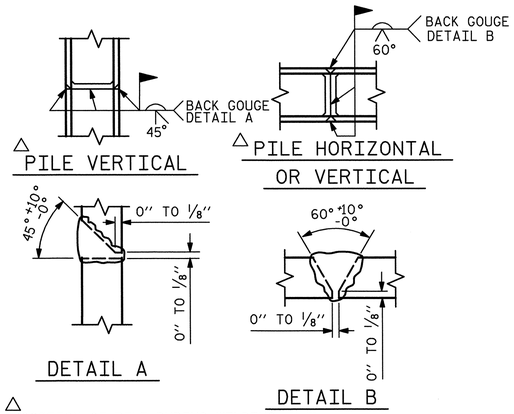

PILE SPLICE DETAILS

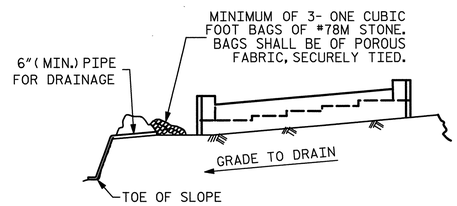

BAGGED STONE AND PIPE SHALL BE PLACED IMMEDIATELY AFTER COMPLETION OF END BENT EXCAVATION. PIPE MAY BE EITHER CONCRETE, CORRUGATED STEEL, CORRUGATED ALUMINUM ALLOY, OR CORRUGATED PLASTIC. PERFORATED PIPE WILL NOT BE ALLOWED.

BAGGED STONE SHALL REMAIN IN PLACE UNTIL THE ENGINEER DIRECTS THAT IT BE REMOVED. THE CONTRACTOR SHALL REMOVE AND DISPOSE OF SILT ACCUMULATIONS AT BAGGED STONE WHEN SO DIRECTED BY THE ENGINEER. BAGS SHALL BE REMOVED AND REPLACED WHENEVER THE ENGINEER DETERMINES THAT THEY HAVE DETERIORATED AND LOST THEIR EFFECTIVENESS.

NO SEPARATE PAYMENT WILL BE MADE FOR THIS WORK AND THE ENTIRE COST OF THIS WORK SHALL BE INCLUDED IN THE UNIT CONTRACT PRICE BID FOR THE SEVERAL PAY ITEMS.

TEMPORARY DRAINAGE AT END BENT

BAR TYPES

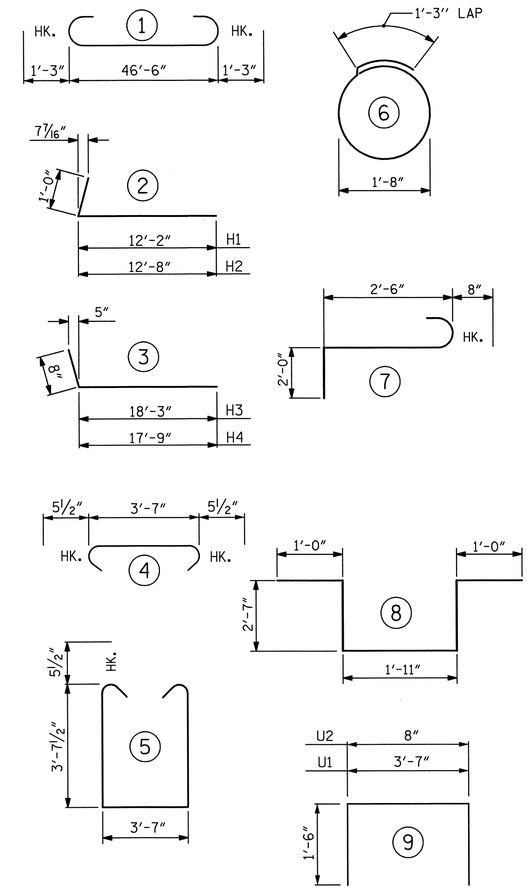

ALL BAR DIMENSIONS ARE OUT TO OUT

BILL OF MATERIAL
END BENT 1

BAR	NO.	SIZE	TYPE	LENGTH	WEIGHT
B1	10	9	1	49'-0"	1666
B2	8	4	STR	24'-7"	131
B3	13	4	STR	3'-7"	31
B4	6	5	STR	46'-8"	292
B5	5	4	STR	2'-11"	10
B6	5	4	STR	9'-8"	32
B7	5	4	STR	8'-11"	30
H1	21	6	2	13'-2"	415
H2	21	6	2	13'-8"	431
H3	12	4	3	18'-11"	152
H4	12	4	3	18'-5"	148
K1	20	4	STR	24'-7"	328
K2	6	4	STR	3'-4"	13
K3	4	4	STR	3'-4"	9
S1	45	5	4	4'-6"	211
S2	45	5	5	11'-9"	551
S3	24	4	6	6'-6"	104
S4	3	6	7	5'-2"	23
S5	3	6	8	9'-1"	41
U1	17	4	9	6'-7"	75
U2	40	4	9	3'-8"	98
V1	80	5	STR	8'-3"	688
V2	34	5	STR	10'-0"	355
V3	45	5	STR	10'-8"	501
TOTAL REINFORCING STEEL					6335 LB

CLASS "A" CONCRETE BREAKDOWN	
POUR 1	
(CAP, COLLARS & LOWER WINGS)	36.5 CY
POUR 2 (BACKWALL & UPPER WINGS)	16.0 CY
TOTAL CLASS "A" CONCRETE	52.5 CY
HP 12 X 53 STEEL PILES	
NO. 7	105.0 LF
STEEL PILE POINTS	NO. 7

PROJECT NO. U-2524C
GUILFORD COUNTY
STATION: 9+75.28 -RPDY4-

SHEET 3 OF 3

STATE OF NORTH CAROLINA
DEPARTMENT OF TRANSPORTATION
RALEIGH
SUBSTRUCTURE

END BENT 1

-RAMP D-

PLANS PREPARED BY:
SIMPSON ENGINEERS & ASSOCIATES
5640 Dillard Drive
Suite 200
Cary, NC 27518
(919) 852-0468
(919) 852-0598 (Fax)
www.simpsonengr.com
LICENSURE NO. C-2521

NORTH CAROLINA PROFESSIONAL SEAL 023906 ENGINEER MARK A. AVERETTE
6-5-2013

REVISIONS						SHEET NO.
NO.	BY:	DATE:	NO.	BY:	DATE:	S-817
1			3			TOTAL SHEETS
2			4			836

DRAWN BY: D. G. VESTER DATE: 4-13
CHECKED BY: M. AVERETTE DATE: 4-13
DESIGN ENGINEER OF RECORD: M. AVERETTE DATE: 4-13

6/5/2013 2:39:26 PM G:\Projects\2011\U-2524 (Guilford Co)\Structures\Ramp D\Drawings\Final\U-2524_sd_rpd_ebt1.dgn

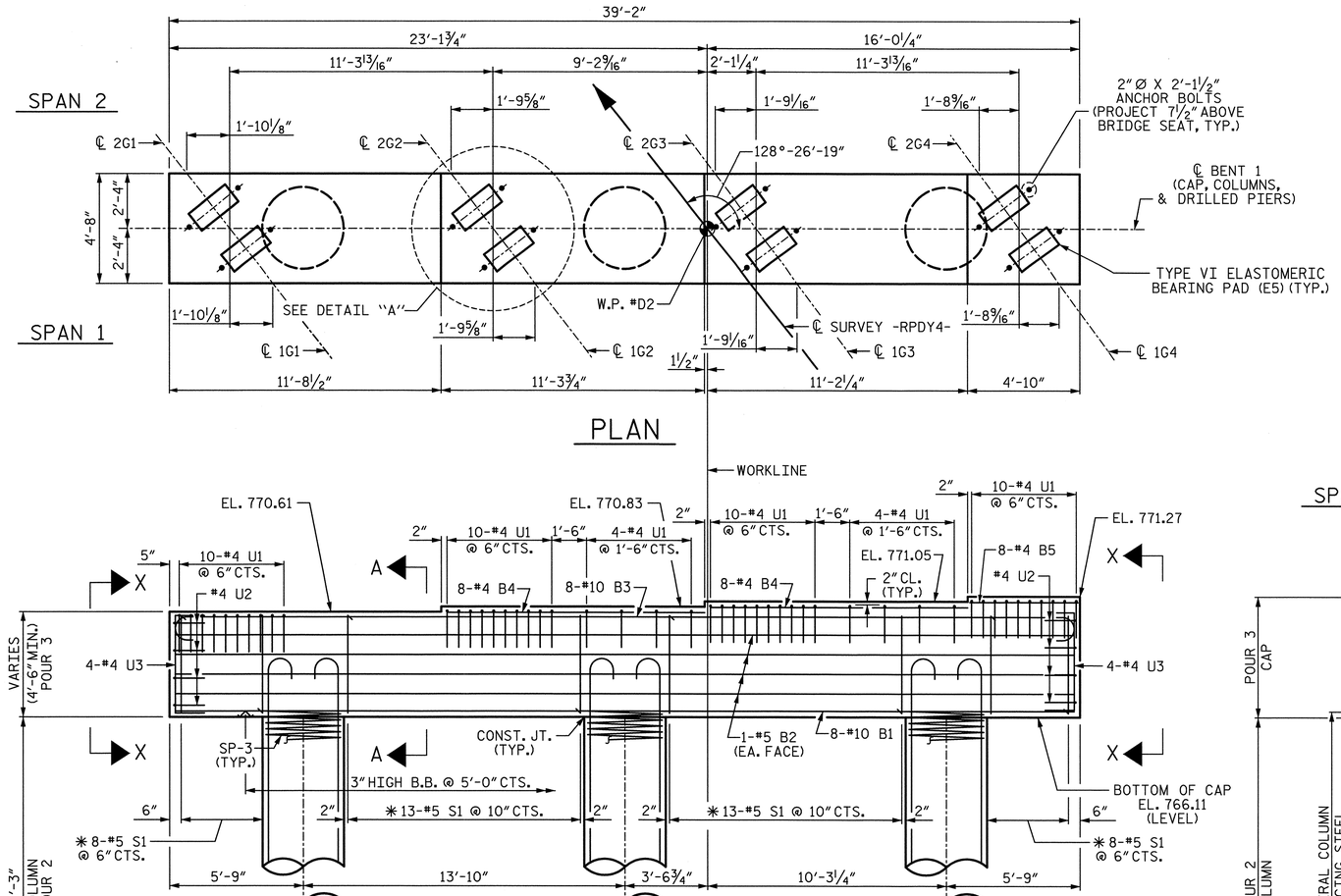

PLAN

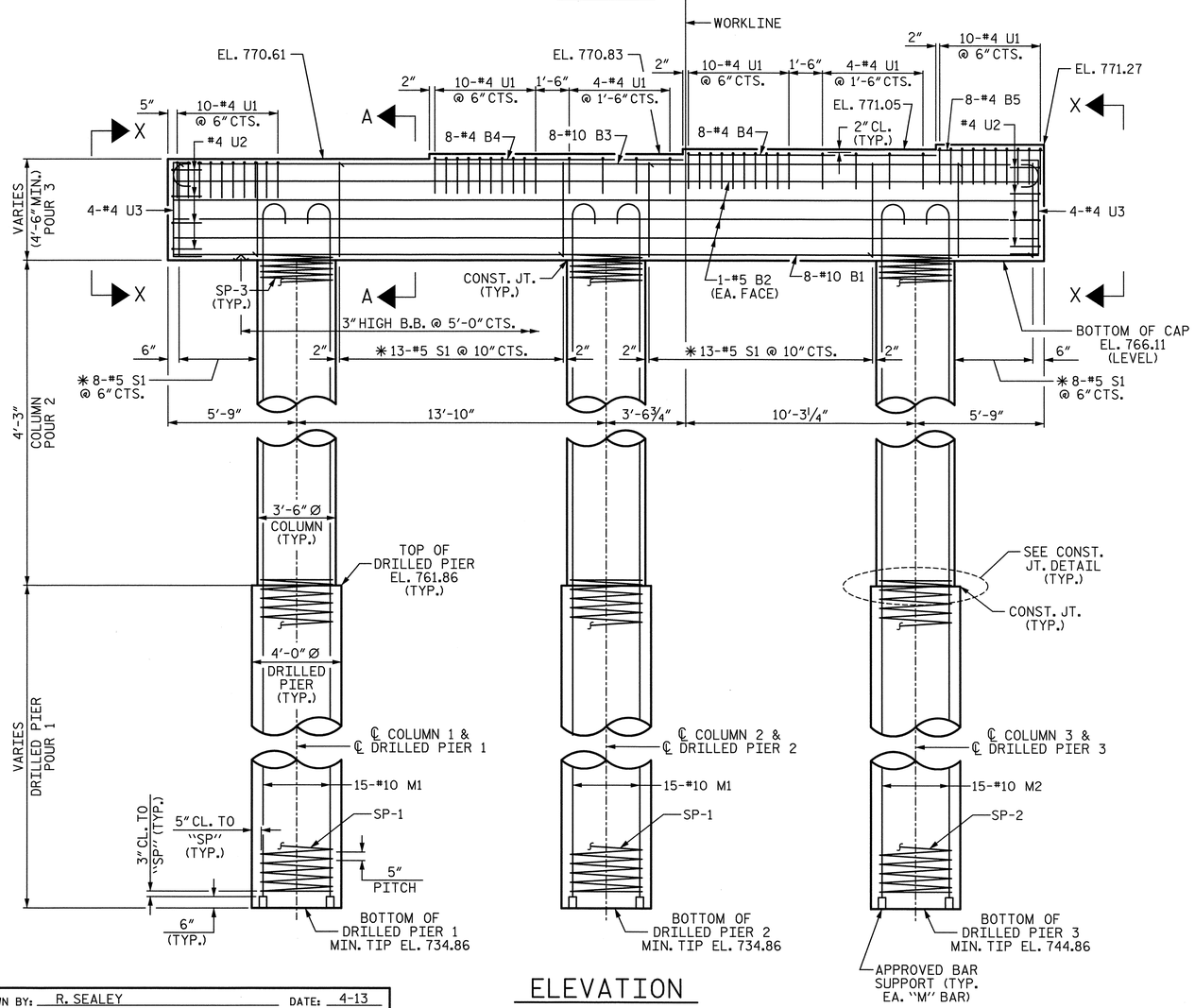

ELEVATION

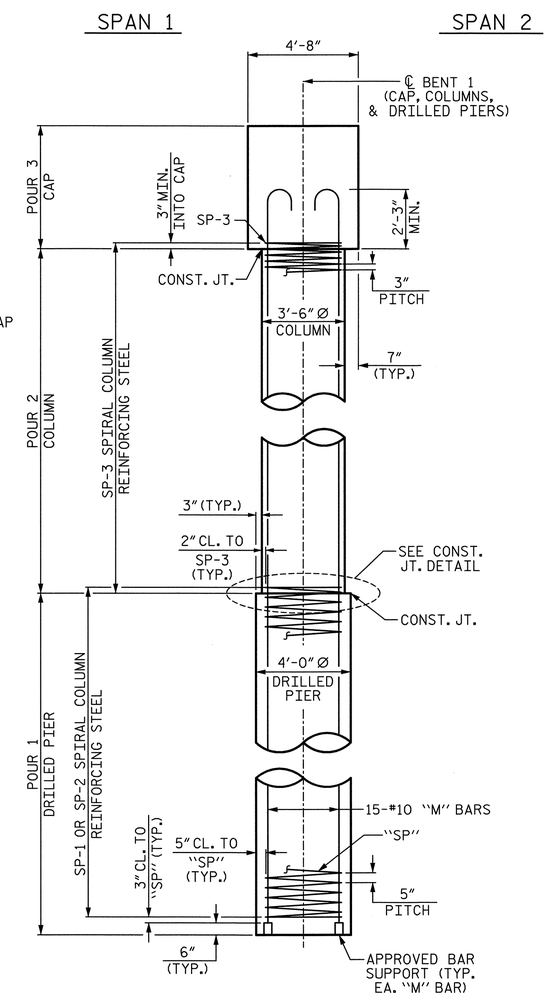

END ELEVATION

NOTES:

✱ INVERT ALTERNATE STIRRUPS.

STIRRUPS AND "U" BARS IN CAP MAY BE SHIFTED AS NECESSARY TO CLEAR ANCHOR BOLTS.

HOOKS ON "M" BARS MAY BE TURNED AS NECESSARY FOR PLACING REINFORCING STEEL.

ALL STEEL IN THE DRILLED PIERS IS INCLUDED IN THE PAY ITEMS FOR "REINFORCING STEEL" AND "SPIRAL COLUMN REINFORCING STEEL".

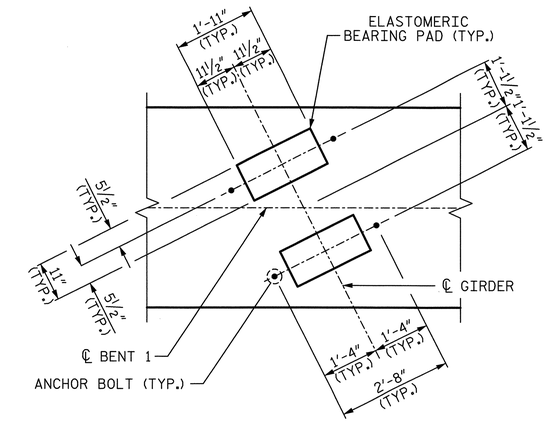

DETAIL "A"

TYP. EA. GIRDER

PROJECT NO. U-2524C

GUILFORD COUNTY

STATION: 9+75.28 -RPDY4-

SHEET 1 OF 2

PLANS PREPARED BY:

SIMPSON ENGINEERS & ASSOCIATES
5640 Dillard Drive
Suite 200
Cary, NC 27518
(919) 852-0468
(919) 852-0598 (Fax)
www.simpsonengr.com
LICENSURE NO. C2521

NORTH CAROLINA PROFESSIONAL SEAL 023906 ENGINEER MARK A. AVERETTE
6-5-2013

STATE OF NORTH CAROLINA
DEPARTMENT OF TRANSPORTATION
RALEIGH

SUBSTRUCTURE

BENT 1

-RAMP D-

REVISIONS						SHEET NO.
NO.	BY:	DATE:	NO.	BY:	DATE:	S-818
1			3			TOTAL SHEETS
2			4			836

DRAWN BY:	R. SEALEY	DATE:	4-13
CHECKED BY:	M. AVERETTE	DATE:	4-13
DESIGN ENGINEER OF RECORD:	M. AVERETTE	DATE:	4-13

6/5/2013 2:39:31 PM G:\Projects\2011\U-2524 (Guilford Co)\Structures\Ramp D\Drawings\Final\U-2524_sd_rpd_bt1.dgn

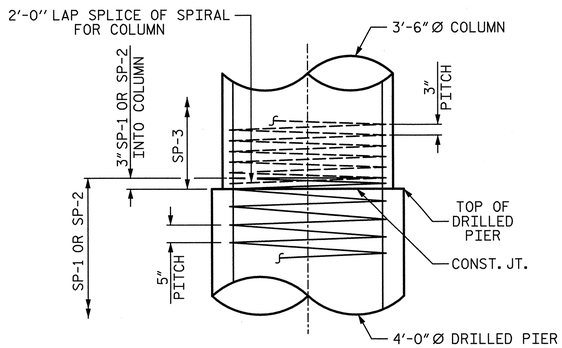

CONSTRUCTION JOINT DETAIL

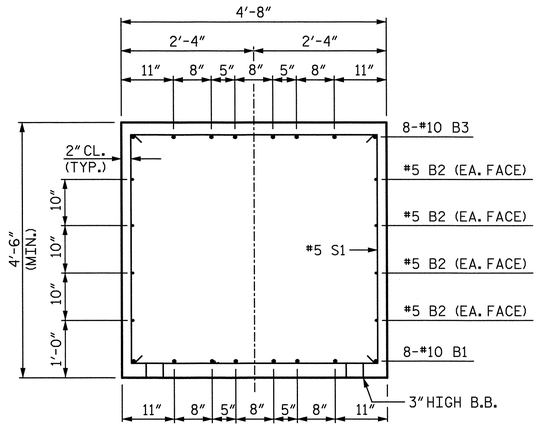

SECTION A-A

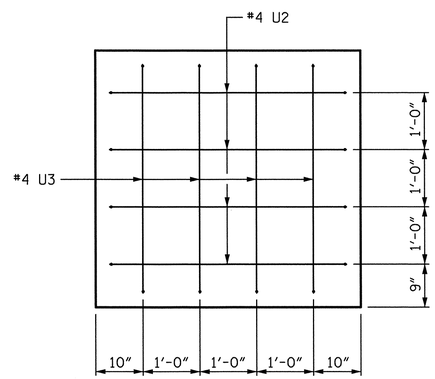

VIEW X-X

BAR TYPES

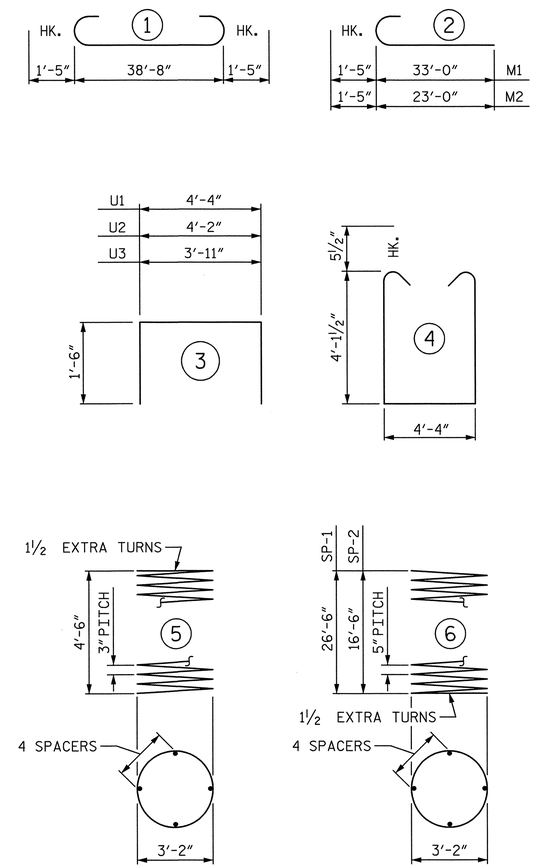

ALL BAR DIMENSIONS ARE OUT TO OUT

✱✱ THE "SP-1" AND "SP-2" SPIRAL REINFORCING STEEL SHALL BE W31 OR D-31 COLD DRAWN WIRE OR #5 PLAIN OR DEFORMED BAR.

✱ THE "SP-3" SPIRAL REINFORCING STEEL SHALL BE W20 OR D-20 COLD DRAWN WIRE OR #4 PLAIN OR DEFORMED BAR.

BILL OF MATERIAL

BENT 1

BAR	NO.	SIZE	TYPE	LENGTH	WEIGHT
B1	8	10	STR	38'-10"	1337
B2	8	5	STR	38'-10"	324
B3	8	10	1	41'-6"	1429
B4	16	4	STR	11'-2"	119
B5	8	4	STR	4'-6"	24
M1	30	10	2	34'-5"	4443
M2	15	10	2	24'-5"	1576
S1	42	5	4	13'-6"	591
U1	48	4	3	7'-4"	235
U2	8	4	3	7'-2"	38
U3	8	4	3	6'-11"	37
SP-1	2	✱✱	6	646'-5"	1348
SP-2	1	✱✱	6	411'-4"	429
SP-3	3	✱	5	196'-5"	394

REINFORCING STEEL	10153 LB
SPIRAL COL. REINF. STEEL	2171 LB
CLASS "A" CONCRETE BREAKDOWN	
POUR 2 (COLUMNS)	4.6 CY
POUR 3 (CAP)	32.4 CY
TOTAL	37.0 CY
DRILLED PIERS:	
DRILLED PIER CONCRETE POUR 1 (DRILLED PIERS)	33.1 CY
4'-0" Ø DRILLED PIER NOT IN SOIL	27.0 LF
4'-0" Ø DRILLED PIER IN SOIL	44.0 LF
CSL TUBES	302 LF

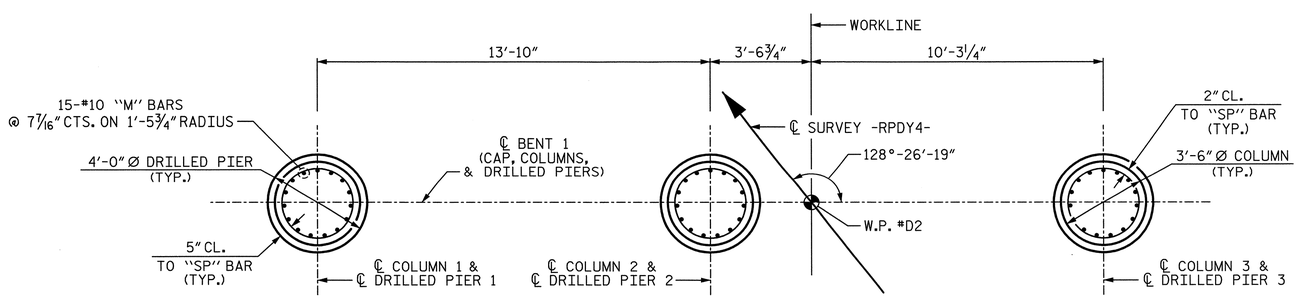

PLAN OF DRILLED PIERS & COLUMNS

(DIMENSIONS AND REINFORCING STEEL SHOWN ARE TYPICAL FOR EACH COLUMN AND DRILLED PIER)

PROJECT NO. U-2524C

GUILFORD COUNTY

STATION: 9+75.28 -RPDY4-

SHEET 2 OF 2

STATE OF NORTH CAROLINA
DEPARTMENT OF TRANSPORTATION
RALEIGH

SUBSTRUCTURE

BENT 1

-RAMP D-

PLANS PREPARED BY:

SIMPSON ENGINEERS & ASSOCIATES
5640 Dillard Drive
Suite 200
Cary, NC 27518
(919) 852-0468
(919) 852-0598 (Fax)
www.simpsonengr.com
LICENSURE NO. C-2521

NORTH CAROLINA PROFESSIONAL SEAL 023906 ENGINEER MARK A. AVERETTE
6-5-2013

REVISIONS								SHEET NO.
NO.	BY:	DATE:	NO.	BY:	DATE:			S-819
1			3					TOTAL SHEETS
2			4					836

DRAWN BY:	R. SEALEY	DATE:	4-13
CHECKED BY:	M. AVERETTE	DATE:	4-13
DESIGN ENGINEER OF RECORD:	M. AVERETTE	DATE:	4-13

6/5/2013 2:39:36 PM G:\Projects\2011\U-2524 (Guilford Co)\Structures\Ramp D\Drawings\Final\U-2524_sd_rpd_bt1.dgn

NOTES:

✱ INVERT ALTERNATE STIRRUPS.

STIRRUPS AND "U" BARS IN CAP MAY BE SHIFTED AS NECESSARY TO CLEAR ANCHOR BOLTS.

HOOKS ON "V" BARS MAY BE TURNED AS NECESSARY FOR PLACING REINFORCING STEEL.

ALL STEEL IN THE DRILLED PIERS IS INCLUDED IN THE PAY ITEMS FOR "REINFORCING STEEL" AND "SPIRAL COLUMN REINFORCING STEEL".

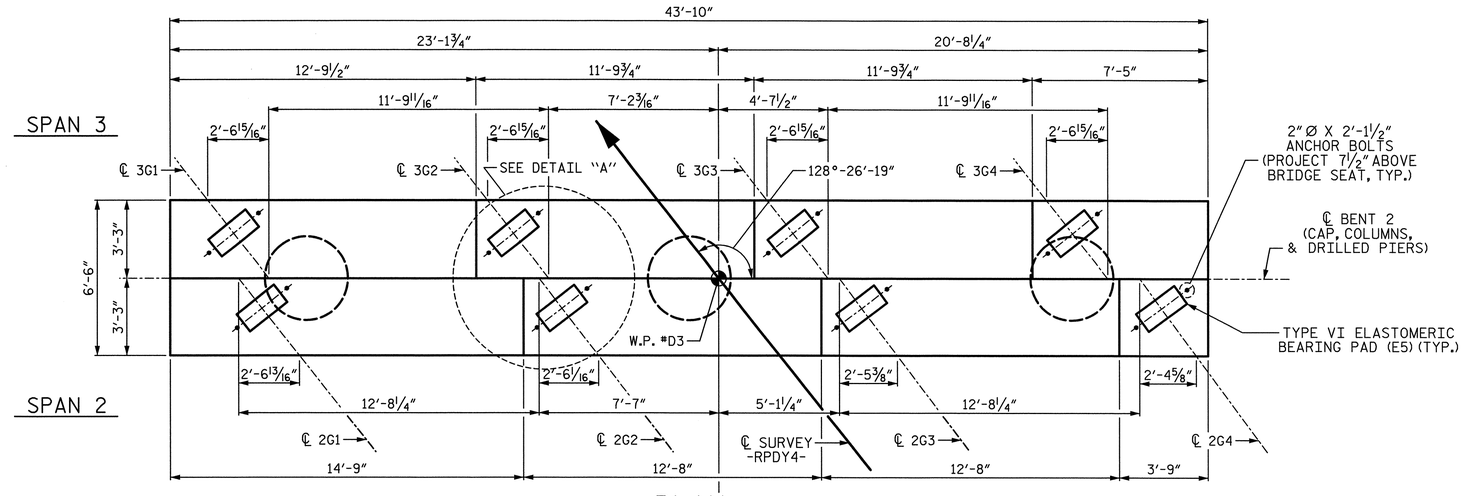

PLAN

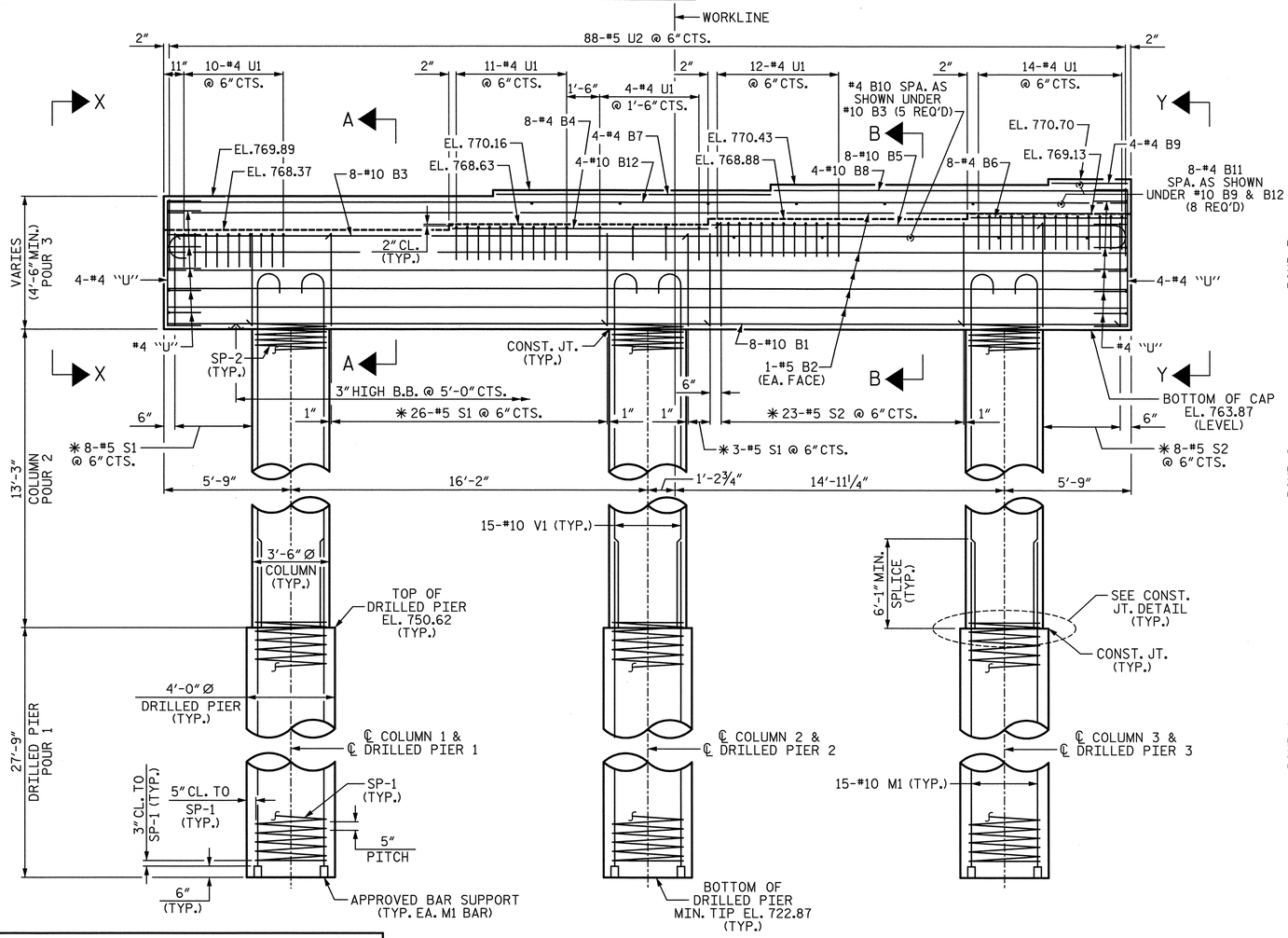

ELEVATION

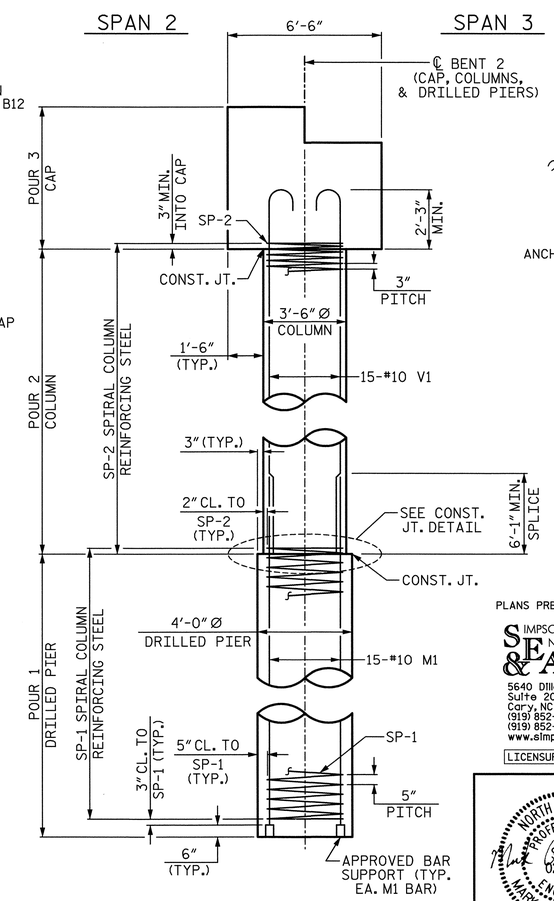

END ELEVATION

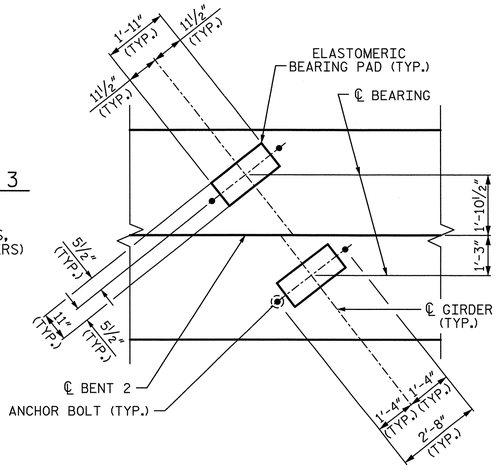

DETAIL "A"

TYP. EA. GIRDER

PROJECT NO. U-2524C

GUILFORD COUNTY

STATION: 9+75.28 -RPDY4-

SHEET 1 OF 2

PLANS PREPARED BY:

SIMPSON ENGINEERS & ASSOCIATES

5640 Dillard Drive
Suite 200
Cary, NC 27518
(919) 852-0468
(919) 852-0598 (Fax)
www.simpsonengr.com

LICENSURE NO. C2521

NORTH CAROLINA PROFESSIONAL SEAL 023908 ENGINEER MARK A. AVERETTE 6-5-2013

STATE OF NORTH CAROLINA
DEPARTMENT OF TRANSPORTATION
RALEIGH

SUBSTRUCTURE

BENT 2

-RAMP D-

REVISIONS						SHEET NO.
NO.	BY:	DATE:	NO.	BY:	DATE:	S-820
1			3			TOTAL SHEETS
2			4			836

DRAWN BY: T. BANKOVICH DATE: 4-13
CHECKED BY: M. AVERETTE DATE: 4-13
DESIGN ENGINEER OF RECORD: M. AVERETTE DATE: 4-13

6/5/2013 2:39:41 PM G:\Projects\2011\U-2524 (Guilford Co)\Structures\Ramp D\Drawings\Final\U-2524_sd_rpd_bt2.dgn

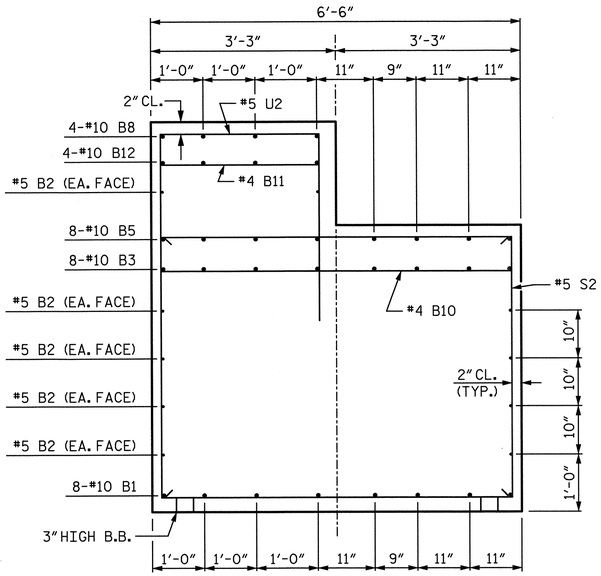

SECTION B-B

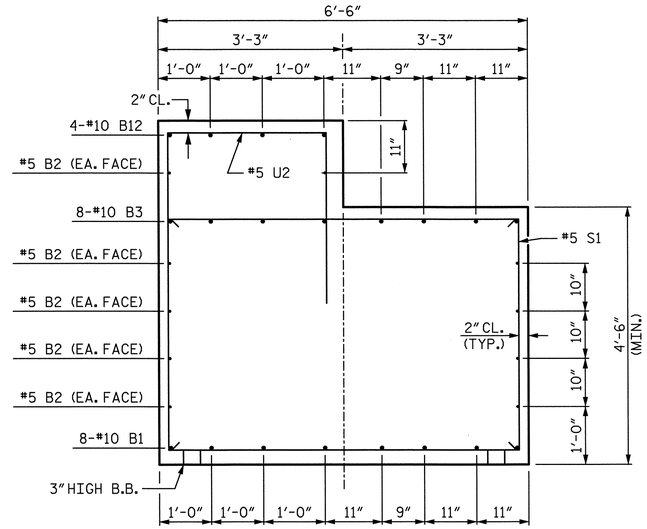

SECTION A-A

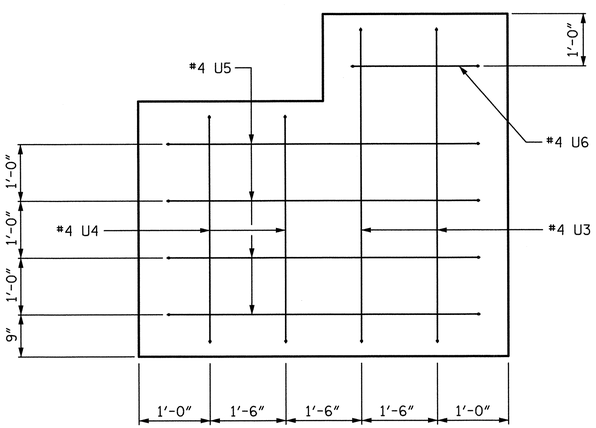

VIEW X-X

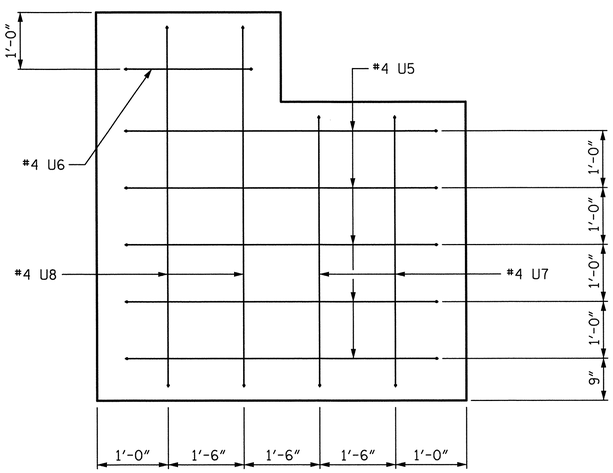

VIEW Y-Y

BAR TYPES

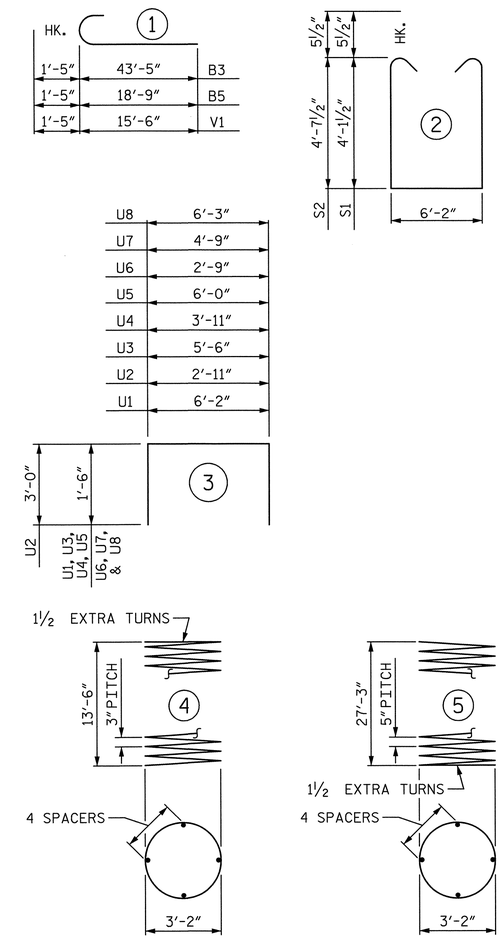

ALL BAR DIMENSIONS ARE OUT TO OUT

✱✱ THE "SP-1" SPIRAL REINFORCING STEEL SHALL BE W31 OR D-31 COLD DRAWN WIRE OR #5 PLAIN OR DEFORMED BAR.

✱ THE "SP-2" SPIRAL REINFORCING STEEL SHALL BE W20 OR D-20 COLD DRAWN WIRE OR #4 PLAIN OR DEFORMED BAR.

BILL OF MATERIAL

BENT 2

BAR	NO.	SIZE	TYPE	LENGTH	WEIGHT
B1	8	10	STR	43'-6"	1497
B2	10	5	STR	43'-6"	454
B3	8	10	1	44'-10"	1543
B4	8	4	STR	11'-8"	62
B5	8	10	1	20'-2"	694
B6	8	4	STR	7'-1"	38
B7	4	4	STR	12'-6"	33
B8	4	10	STR	16'-0"	275
B9	4	4	STR	3'-5"	9
B10	5	4	STR	6'-2"	21
B11	8	4	STR	2'-11"	16
B12	4	10	STR	43'-6"	749
M1	45	10	STR	33'-4"	6455
S1	37	5	2	15'-4"	592
S2	31	5	2	16'-4"	528
U1	51	4	3	9'-2"	312
U2	88	5	3	8'-11"	818
U3	2	4	3	8'-6"	11
U4	2	4	3	6'-11"	9
U5	9	4	3	9'-0"	54
U6	2	4	3	5'-9"	8
U7	2	4	3	7'-9"	10
U8	2	4	3	9'-3"	12
V1	45	10	1	16'-11"	3276
SP-1	3	✱✱	5	656'-3"	2053
SP-2	3	✱	4	550'-0"	1102

REINFORCING STEEL	17476 LB
SPIRAL COL. REINF. STEEL	3155 LB
CLASS "A" CONCRETE BREAKDOWN	
POUR 2 (COLUMNS)	14.2 CY
POUR 3 (CAP)	59.0 CY
TOTAL	73.2 CY
DRILLED PIERS:	
DRILLED PIERS CONCRETE POUR 1 (DRILLED PIERS)	38.8 CY
4'-0" Ø DRILLED PIER NOT IN SOIL	47.0 LF
4'-0" DRILLED PIER IN SOIL	36.3 LF
CSL TUBES	351.0 LF

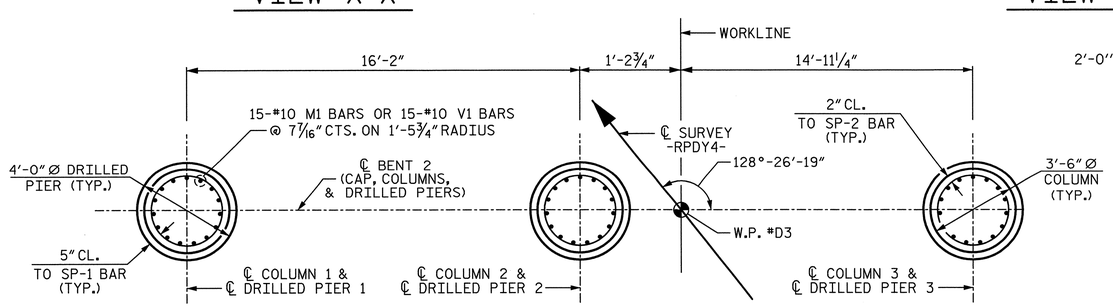

PLAN OF DRILLED PIERS & COLUMNS

(DIMENSIONS AND REINFORCING STEEL SHOWN ARE TYPICAL FOR EACH COLUMN AND DRILLED PIER)

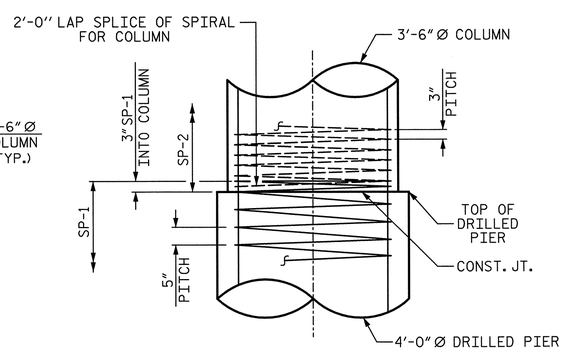

CONSTRUCTION JOINT DETAIL

PRELIMINARY
DO NOT USE FOR CONSTRUCTION

PROJECT NO. U-2524C

GUILFORD COUNTY

STATION: 9+75.28 -RPDY4-

SHEET 2 OF 2

STATE OF NORTH CAROLINA
DEPARTMENT OF TRANSPORTATION
RALEIGH

SUBSTRUCTURE

BENT 2

-RAMP D-

PLANS PREPARED BY:

SIMPSON ENGINEERS & ASSOCIATES
5640 Dillard Drive
Suite 200
Cary, NC 27518
(919) 852-0468
(919) 852-0598 (Fax)
www.simpsonengr.com
LICENSURE NO. C-2521

NORTH CAROLINA PROFESSIONAL SEAL 023906 ENGINEER MARK A. AVERETTE
6-5-2013

REVISIONS								SHEET NO.
NO.	BY:	DATE:	NO.	BY:	DATE:			S-821
1			3					TOTAL SHEETS
2			4					836

DRAWN BY:	T. BANKOVICH	DATE:	4-13
CHECKED BY:	M. AVERETTE	DATE:	4-13
DESIGN ENGINEER OF RECORD:	M. AVERETTE	DATE:	4-13

6/5/2013 2:39:45 PM G:\Projects\2011\U-2524 (Guilford Co)\Structures\Ramp D\Drawings\Final\U-2524_sd_rpd_bt2.dgn

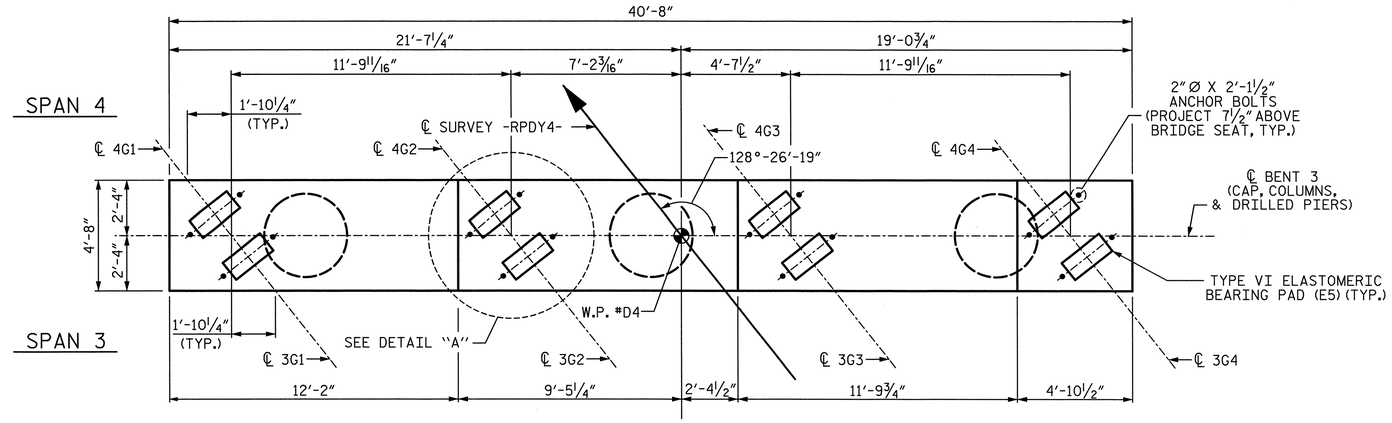

PLAN

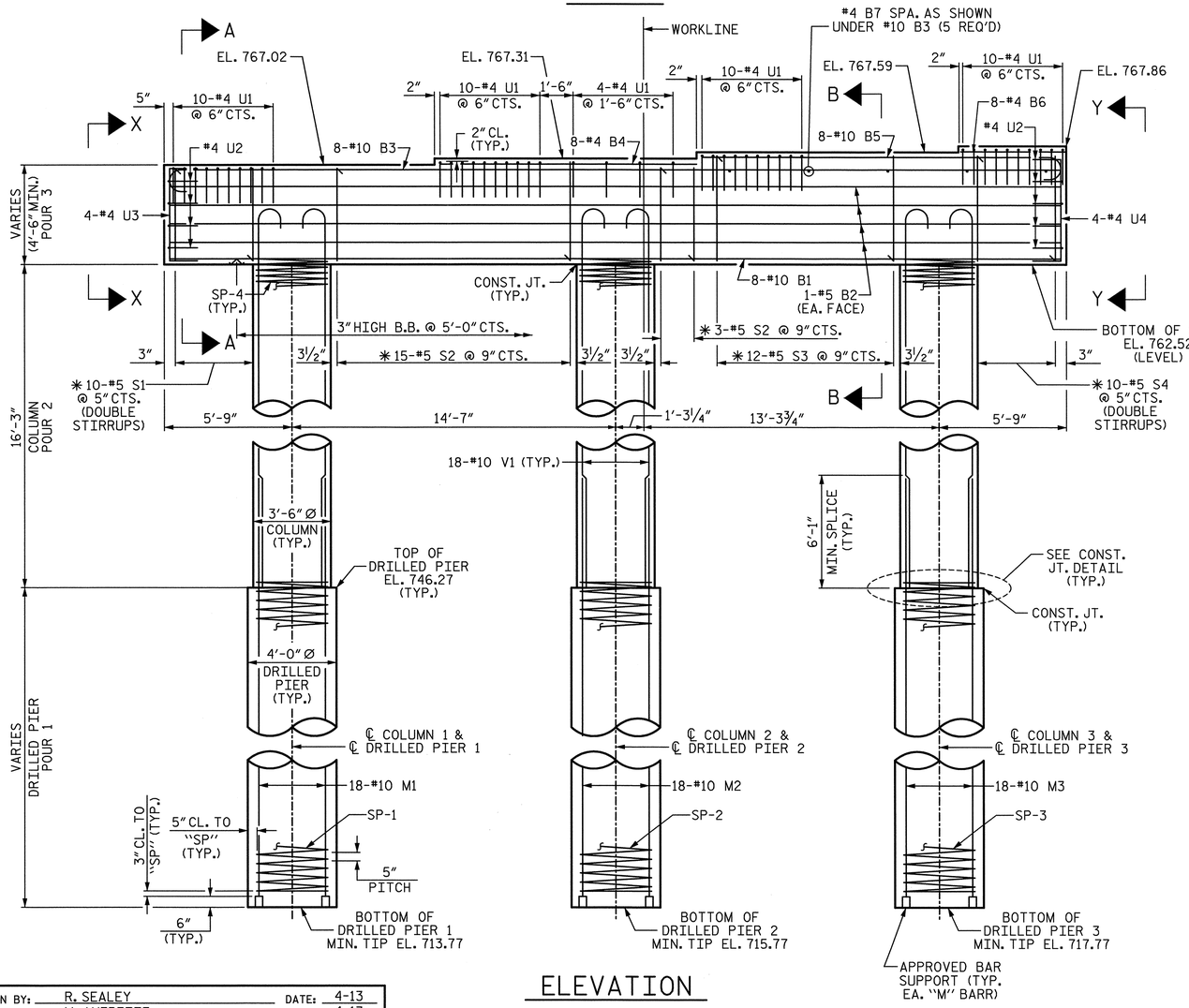

ELEVATION

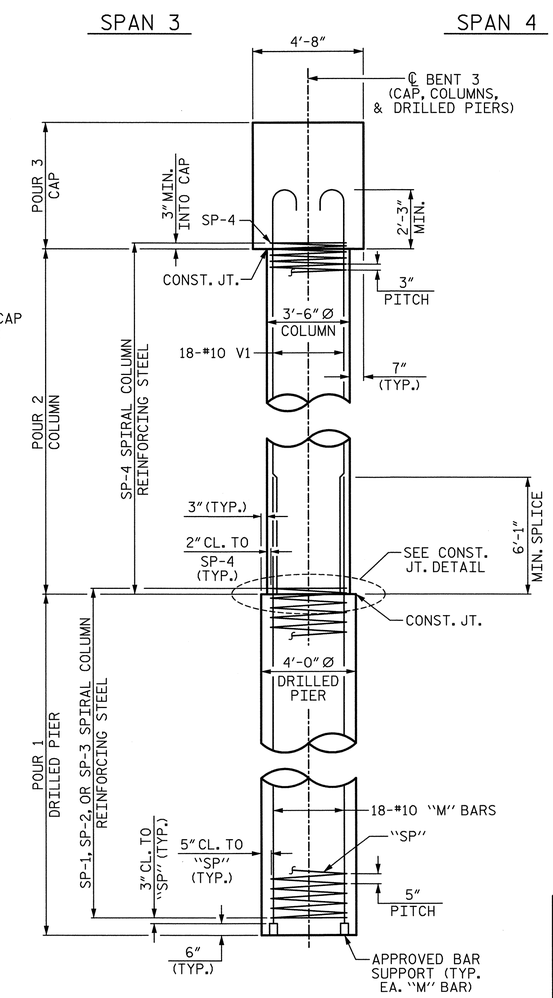

END ELEVATION

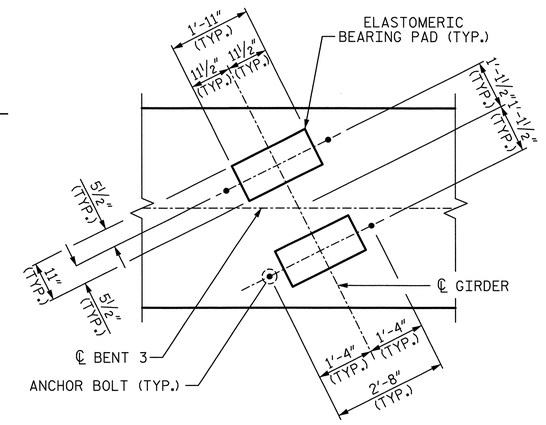

DETAIL "A"

TYP. EA. GIRDER

NOTES:

* INVERT ALTERNATE STIRRUPS.

STIRRUPS IN CAP AND "U" BARS MAY BE SHIFTED AS NECESSARY TO CLEAR ANCHOR BOLTS.

HOOKS ON "V" BARS MAY BE TURNED AS NECESSARY FOR PLACING REINFORCING STEEL.

ALL STEEL IN THE DRILLED PIERS IS INCLUDED IN THE PAY ITEMS FOR "REINFORCING STEEL" AND "SPIRAL COLUMN REINFORCING STEEL".

PROJECT NO. U-2524C

GUILFORD COUNTY

STATION: 9+75.28 -RPDY4-

SHEET 1 OF 2

PLANS PREPARED BY:
SIMPSON ENGINEERS & ASSOCIATES
5640 Dillard Drive
Suite 200
Cary, NC 27518
(919) 852-0468
(919) 852-0598 (Fax)
www.simpsonengr.com
LICENSURE NO. C-2521

NORTH CAROLINA PROFESSIONAL SEAL 023906 ENGINEER MARK A. AVERETTE
6-5-2013

STATE OF NORTH CAROLINA
DEPARTMENT OF TRANSPORTATION
RALEIGH

SUBSTRUCTURE

BENT 3

-RAMP D-

REVISIONS							SHEET NO.
NO.	BY:	DATE:	NO.	BY:	DATE:		S-822
1			3				TOTAL SHEETS
2			4				836

DRAWN BY: R. SEALEY DATE: 4-13
CHECKED BY: M. AVERETTE DATE: 4-13
DESIGN ENGINEER OF RECORD: M. AVERETTE DATE: 4-13

6/5/2013 2:39:50 PM G:\Projects\2011\U-2524 (Guilford Co)\Structures\Ramp D\Drawings\Final\U-2524_sd_rpd_bt3.dgn

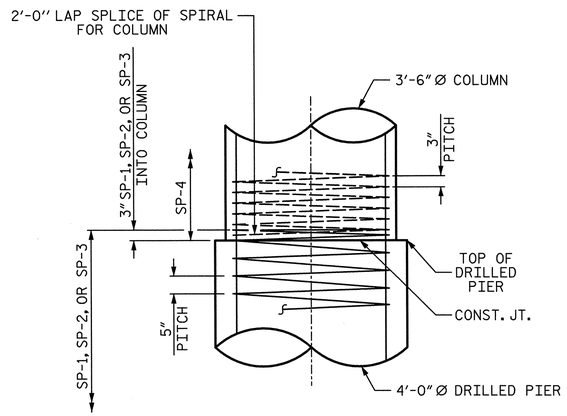

CONSTRUCTION JOINT DETAIL

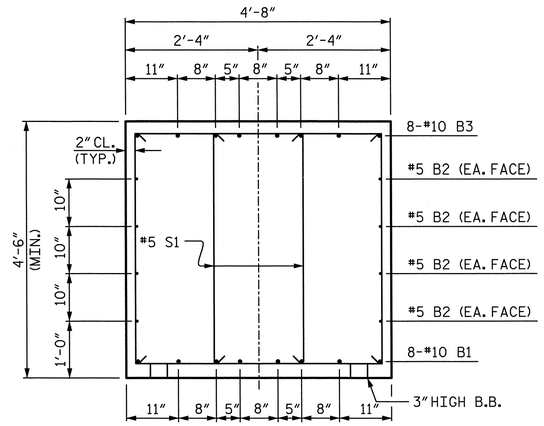

SECTION A-A

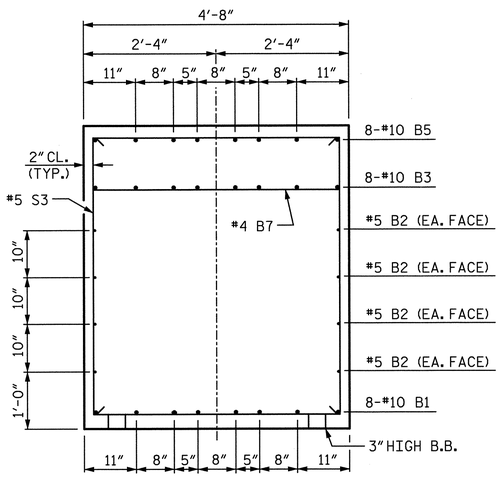

SECTION B-B

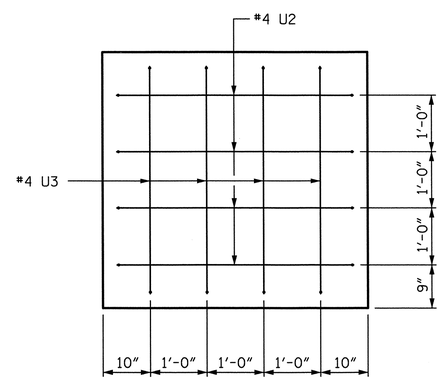

VIEW X-X

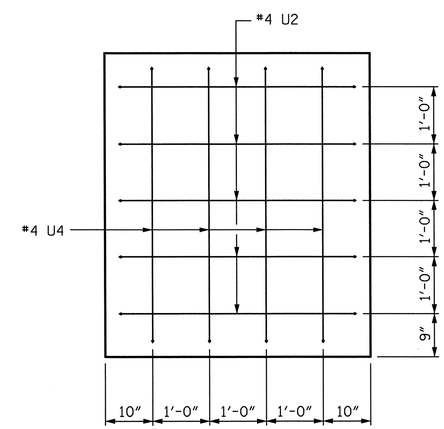

VIEW Y-Y

BAR TYPES

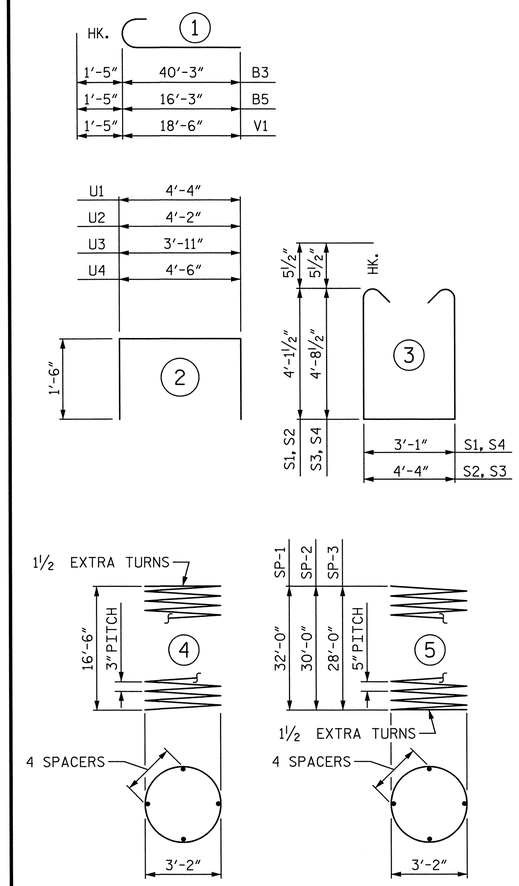

ALL BAR DIMENSIONS ARE OUT TO OUT

BILL OF MATERIAL

BENT 3

BAR	NO.	SIZE	TYPE	LENGTH	WEIGHT
B1	8	10	STR	40'-4"	1388
B2	8	5	STR	40'-4"	337
B3	8	10	1	41'-8"	1434
B4	8	4	STR	11'-8"	62
B5	8	10	1	17'-8"	608
B6	8	4	STR	4'-6"	24
B7	5	4	STR	4'-4"	14
M1	18	10	STR	38'-1"	2950
M2	18	10	STR	36'-1"	2795
M3	18	10	STR	34'-1"	2640
S1	20	5	3	12'-3"	256
S2	18	5	3	13'-6"	253
S3	12	5	3	14'-8"	184
S4	20	5	3	13'-5"	280
U1	44	4	2	7'-4"	216
U2	9	4	2	7'-2"	43
U3	4	4	2	6'-11"	18
U4	4	4	2	7'-6"	20
V1	54	10	1	19'-11"	4628
SP-1	1	✱✱	5	773'-9"	807
SP-2	1	✱✱	5	724'-9"	756
SP-3	1	✱✱	5	675'-10"	705
SP-4	3	✱	4	667'-10"	1338

REINFORCING STEEL	18150 LB
SPIRAL COL. REINF. STEEL	3606 LB
CLASS "A" CONCRETE BREAKDOWN	
POUR 2 (COLUMNS)	17.4 CY
POUR 3 (CAP)	34.1 CY
TOTAL	51.5 CY
DRILLED PIERS:	
DRILLED PIER CONCRETE POUR 1 (DRILLED PIERS)	42.6 CY
4'-0" Ø DRILLED PIER NOT IN SOIL	35.0 LF
4'-0" Ø DRILLED PIER IN SOIL	56.5 LF
CSL TUBES	384 LF

✱✱ THE "SP-1", "SP-2", AND "SP-3" SPIRAL REINFORCING STEEL SHALL BE W31 OR D-31 COLD DRAWN WIRE OR #5 PLAIN OR DEFORMED BAR.

✱ THE "SP-4" SPIRAL REINFORCING STEEL SHALL BE W20 OR D-20 COLD DRAWN WIRE OR #4 PLAIN OR DEFORMED BAR.

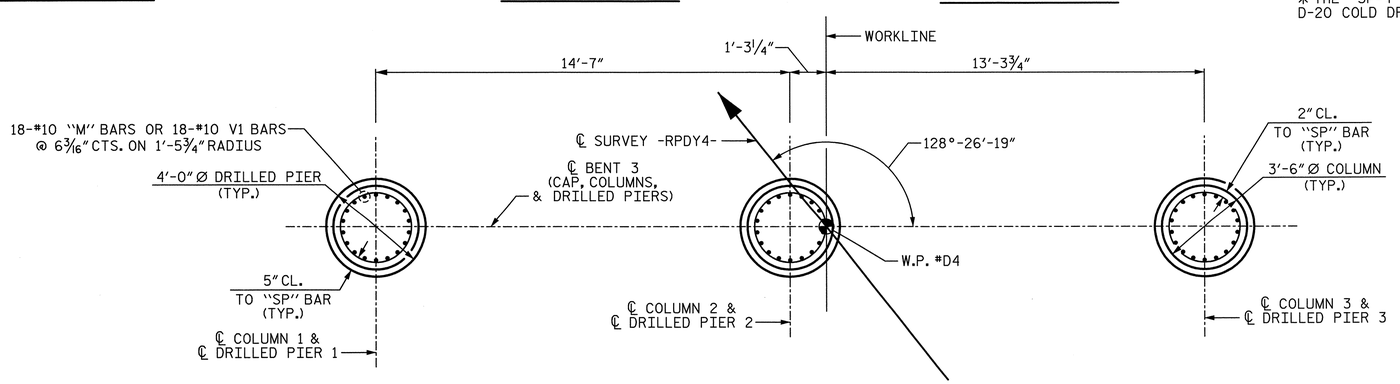

PLAN OF DRILLED PIERS & COLUMNS

(DIMENSIONS AND REINFORCING STEEL SHOWN ARE TYPICAL FOR EACH COLUMN AND DRILLED PIER)

PROJECT NO. U-2524C

GUILFORD COUNTY

STATION: 9+75.28 -RPDY4-

SHEET 2 OF 2

STATE OF NORTH CAROLINA
DEPARTMENT OF TRANSPORTATION
RALEIGH

SUBSTRUCTURE

BENT 3

-RAMP D-

PLANS PREPARED BY:

SIMPSON ENGINEERS & ASSOCIATES
5640 Dillard Drive
Suite 200
Cary, NC 27518
(919) 852-0468
(919) 852-0598 (Fax)
www.simpsonengr.com
LICENSURE NO. C-2521

NORTH CAROLINA PROFESSIONAL SEAL 023908 ENGINEER MARK A. AVERETTE
6-5-2013

REVISIONS								SHEET NO.
NO.	BY:	DATE:	NO.	BY:	DATE:			S-823
1			3					TOTAL SHEETS
2			4					836

DRAWN BY: R. SEALEY DATE: 4-13
CHECKED BY: M. AVERETTE DATE: 4-13
DESIGN ENGINEER OF RECORD: M. AVERETTE DATE: 4-13

6/5/2013 2:39:54 PM G:\Projects\2011\U-2524 (Guilford Co)\Structures\Ramp D\Drawings\Final\U-2524_sd_rpd_bt3.dgn

NOTES:

✱ INVERT ALTERNATE STIRRUPS.

STIRRUPS AND "U" BARS IN CAP MAY BE SHIFTED AS NECESSARY TO CLEAR ANCHOR BOLTS.

HOOKS ON "V" BARS MAY BE TURNED AS NECESSARY FOR PLACING REINFORCING STEEL.

ALL STEEL IN THE DRILLED PIERS IS INCLUDED IN THE PAY ITEMS FOR "REINFORCING STEEL" AND "SPIRAL COLUMN REINFORCING STEEL".

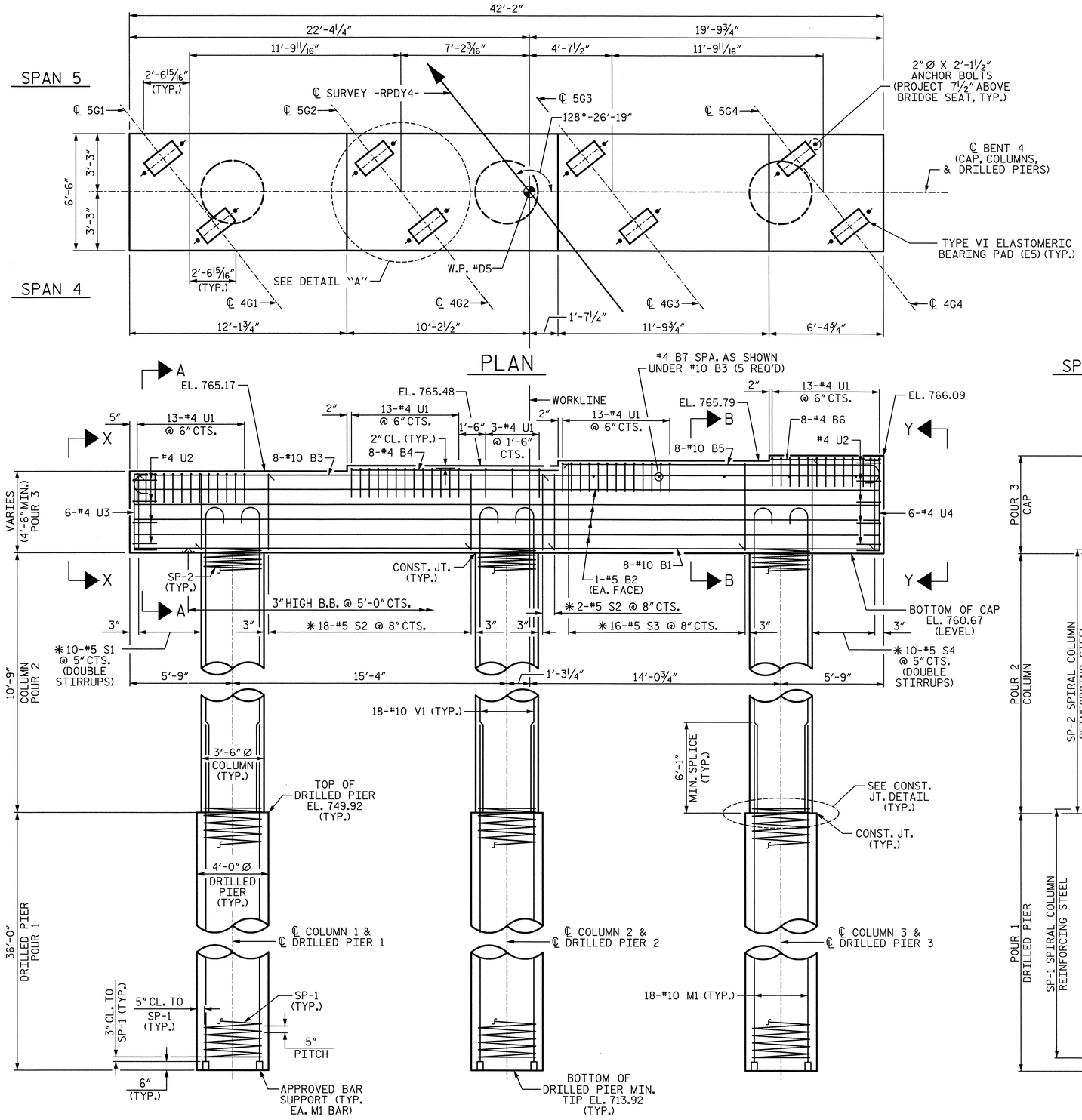

PROJECT NO. U-2524C

GUILFORD COUNTY

STATION: 9+75.28 -RPDY4-

SHEET 1 OF 2

PLANS PREPARED BY:

SIMPSON ENGINEERS & ASSOCIATES
5640 Dillard Drive
Suite 200
Cary, NC 27518
(919) 852-0468
(919) 852-0598 (Fax)
www.simpsonengr.com
LICENSURE NO. C-2521

NORTH CAROLINA PROFESSIONAL SEAL 023906 ENGINEER MARK A. AVERETTE
6-5-2013

STATE OF NORTH CAROLINA
DEPARTMENT OF TRANSPORTATION
RALEIGH

SUBSTRUCTURE

BENT 4

-RAMP D-

REVISIONS						SHEET NO.
NO.	BY:	DATE:	NO.	BY:	DATE:	S-824
1			3			TOTAL SHEETS
2			4			836

DRAWN BY:	R. SEALEY	DATE:	4-13
CHECKED BY:	M. AVERETTE	DATE:	4-13
DESIGN ENGINEER OF RECORD:	M. AVERETTE	DATE:	4-13

6/5/2013 2:39:59 PM G:\Projects\2011\U-2524 (Guilford Co)\Structures\Ramp D\Drawings\Final\U-2524_sd_rpd_bt4.dgn

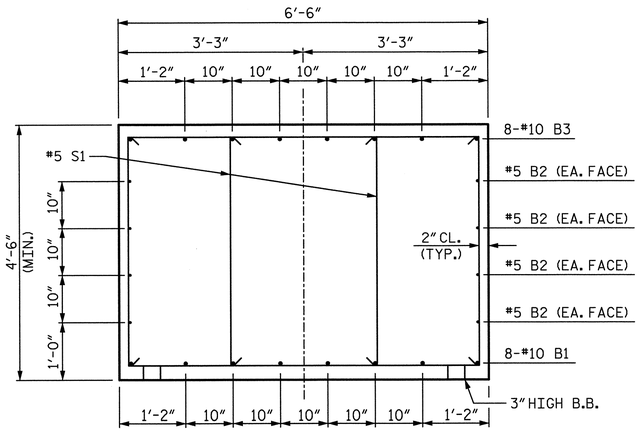

SECTION A-A

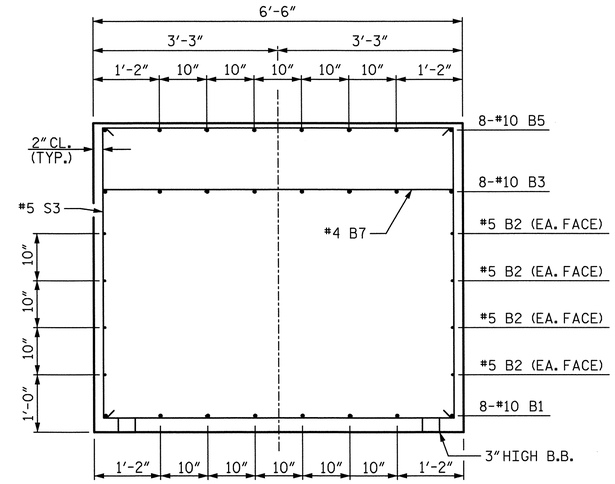

SECTION B-B

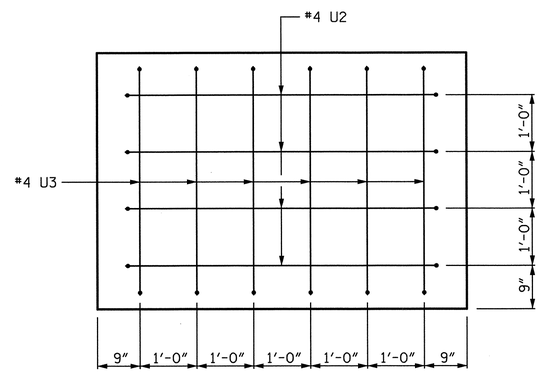

VIEW X-X

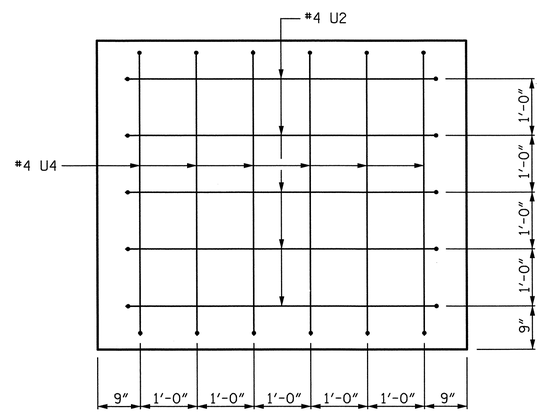

VIEW Y-Y

BAR TYPES

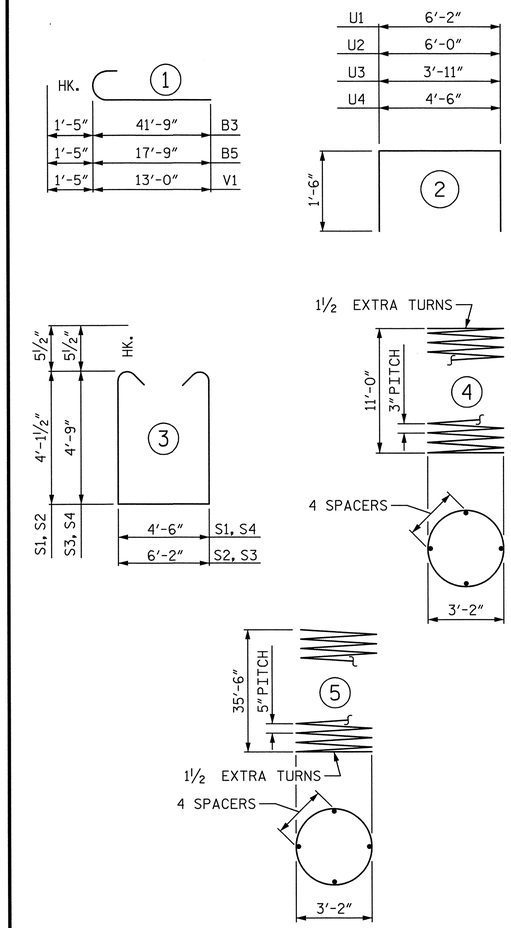

ALL BAR DIMENSIONS ARE OUT TO OUT

BILL OF MATERIAL

BENT 4

BAR	NO.	SIZE	TYPE	LENGTH	WEIGHT
B1	8	10	STR	41'-10"	1440
B2	8	5	STR	41'-10"	349
B3	8	10	1	43'-2"	1486
B4	8	4	STR	11'-8"	62
B5	8	10	1	19'-2"	660
B6	8	4	STR	6'-0"	32
B7	5	4	STR	6'-2"	21
M1	54	10	STR	41'-7"	9662
S1	20	5	3	13'-8"	285
S2	20	5	3	15'-4"	320
S3	16	5	3	16'-7"	277
S4	20	5	3	14'-11"	311
U1	55	4	2	9'-2"	337
U2	9	4	2	9'-0"	54
U3	6	4	2	6'-11"	28
U4	6	4	2	7'-6"	30
V1	54	10	1	14'-5"	3350
SP-1	3	✱✱	5	852'-1"	2666
SP-2	3	✱	4	451'-10"	905

REINFORCING STEEL	18704 LB
SPIRAL COL. REINF. STEEL	3571 LB
CLASS "A" CONCRETE BREAKDOWN	
POUR 2 (COLUMNS)	11.5 CY
POUR 3 (CAP)	49.8 CY
TOTAL	61.3 CY
DRILLED PIERS:	
DRILLED PIER CONCRETE POUR 1 (DRILLED PIERS)	50.3 CY
4'-0" Ø DRILLED PIER NOT IN SOIL	32.0 CY
4'-0" Ø DRILLED PIER IN SOIL	76.0 CY
CSL TUBES	450.0 LF

✱✱ THE "SP-1" SPIRAL REINFORCING STEEL SHALL BE W31 OR D-31 COLD DRAWN WIRE OR #5 PLAIN OR DEFORMED BAR.

✱ THE "SP-2" SPIRAL REINFORCING STEEL SHALL BE W20 OR D-20 COLD DRAWN WIRE OR #4 PLAIN OR DEFORMED BAR.

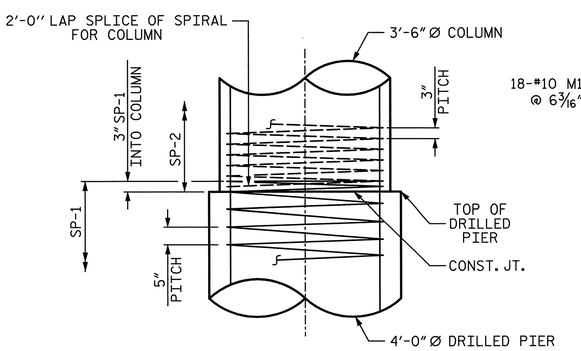

CONSTRUCTION JOINT DETAIL

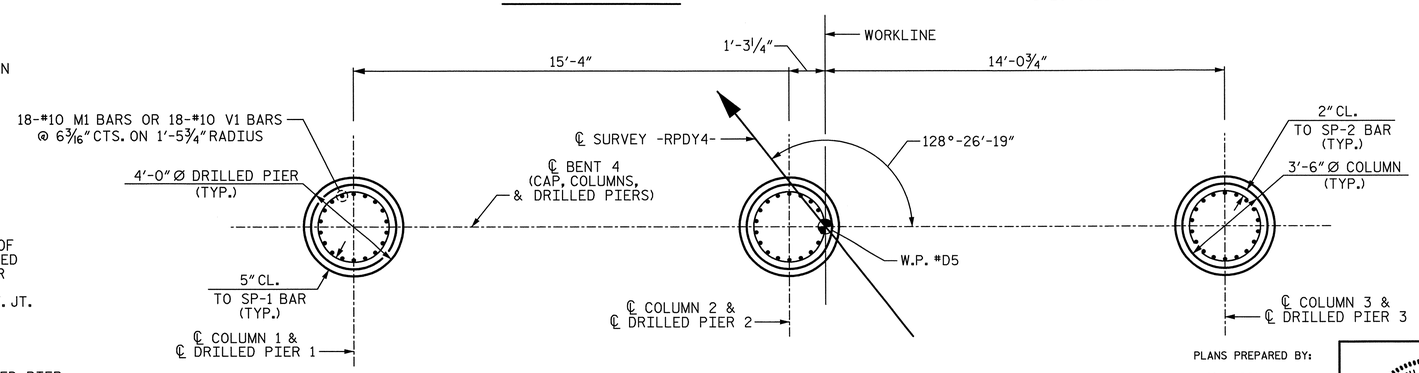

PLAN OF DRILLED PIERS & COLUMNS

(DIMENSIONS AND REINFORCING STEEL SHOWN ARE TYPICAL FOR EACH COLUMN AND DRILLED PIER)

PROJECT NO. U-2524C

GUILFORD COUNTY

STATION: 9+75.28 -RPDY4-

SHEET 2 OF 2

STATE OF NORTH CAROLINA
DEPARTMENT OF TRANSPORTATION
RALEIGH

SUBSTRUCTURE

BENT 4

-RAMP D-

PLANS PREPARED BY:
SIMPSON ENGINEERS & ASSOCIATES
5640 Dillard Drive
Suite 200
Cary, NC 27518
(919) 852-0468
(919) 852-0598 (Fax)
www.simpsonengr.com
LICENSURE NO. C-2521

NORTH CAROLINA PROFESSIONAL SEAL 023906 ENGINEER MARK A. AVERETTE
6-5-2013

REVISIONS						SHEET NO.
NO.	BY:	DATE:	NO.	BY:	DATE:	S-825
1			3			TOTAL SHEETS
2			4			836

DRAWN BY: R. SEALEY DATE: 4-13
CHECKED BY: M. AVERETTE DATE: 4-13
DESIGN ENGINEER OF RECORD: M. AVERETTE DATE: 4-13

6/5/2013 2:40:04 PM G:\Projects\2011\U-2524 (Guilford Co)\Structures\Ramp D\Drawings\Final\U-2524_sd_rpd_bt4.dgn

NOTES:

✱ INVERT ALTERNATE STIRRUPS.

STIRRUPS AND "U" BARS IN CAP MAY BE SHIFTED AS NECESSARY TO CLEAR ANCHOR BOLTS.

HOOKS ON "V" BARS MAY BE TURNED AS NECESSARY FOR PLACING REINFORCING STEEL.

ALL STEEL IN THE DRILLED PIERS IS INCLUDED IN THE PAY ITEMS FOR "REINFORCING STEEL" AND "SPIRAL COLUMN REINFORCING STEEL".

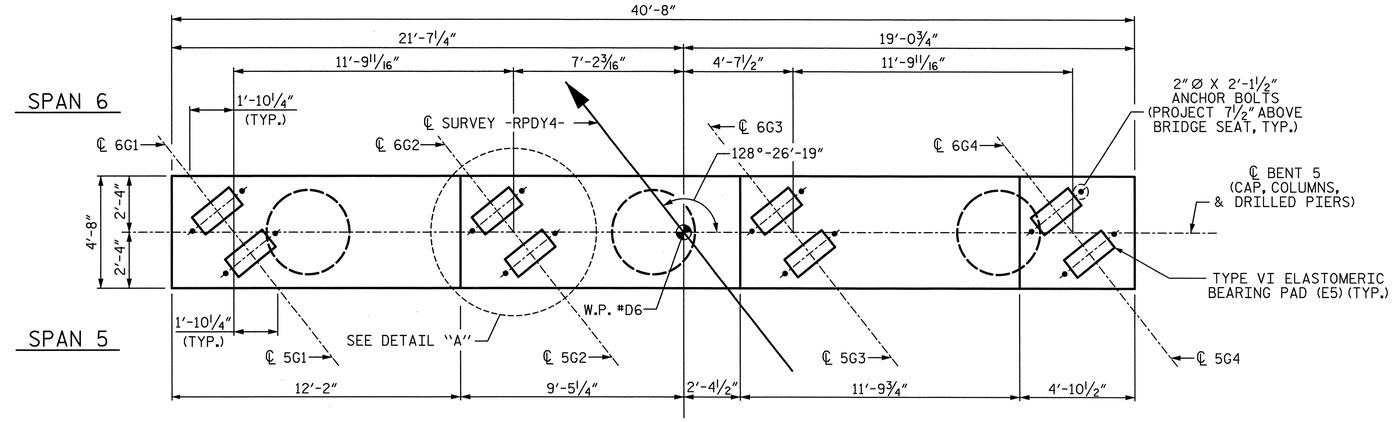

PLAN

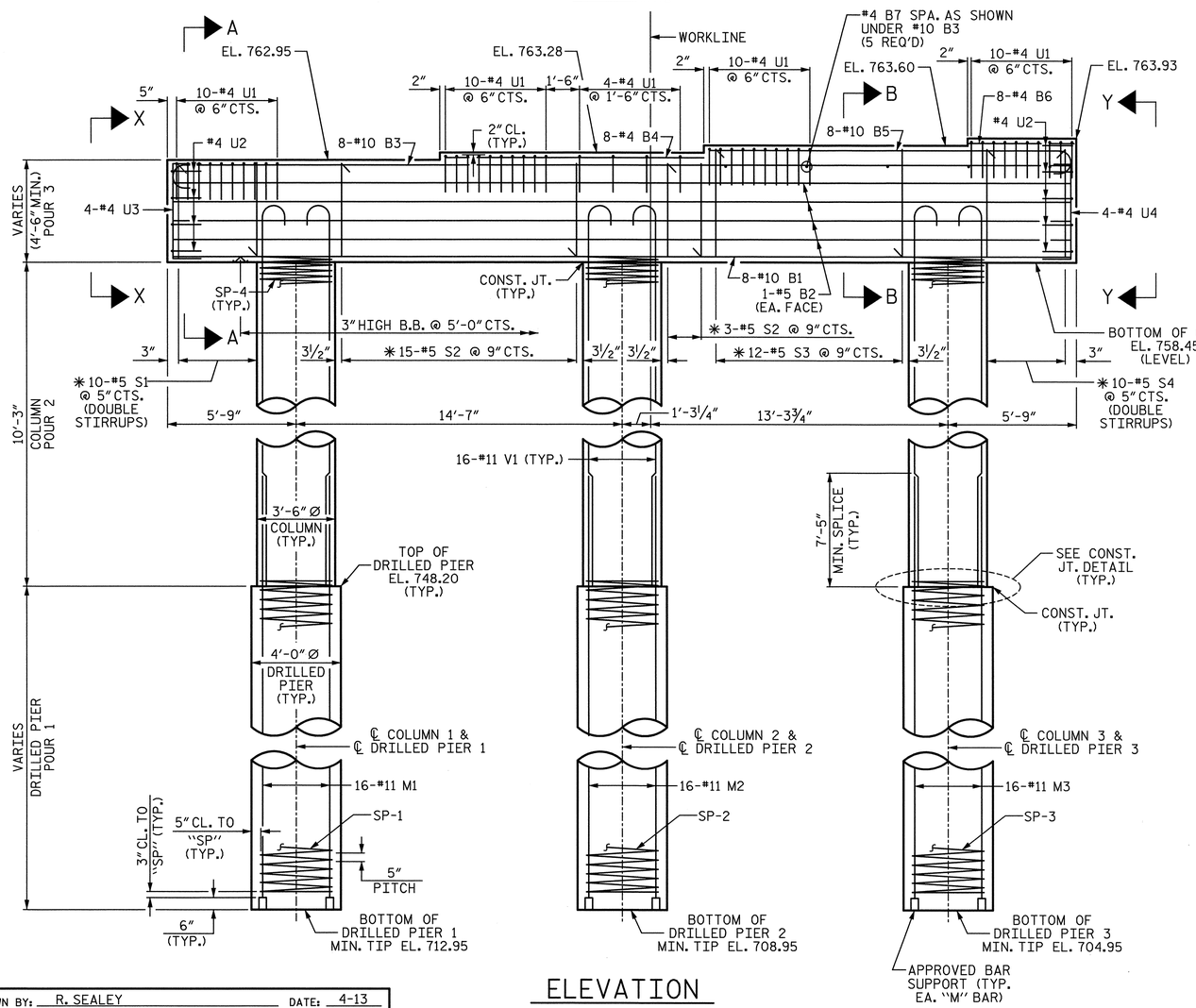

ELEVATION

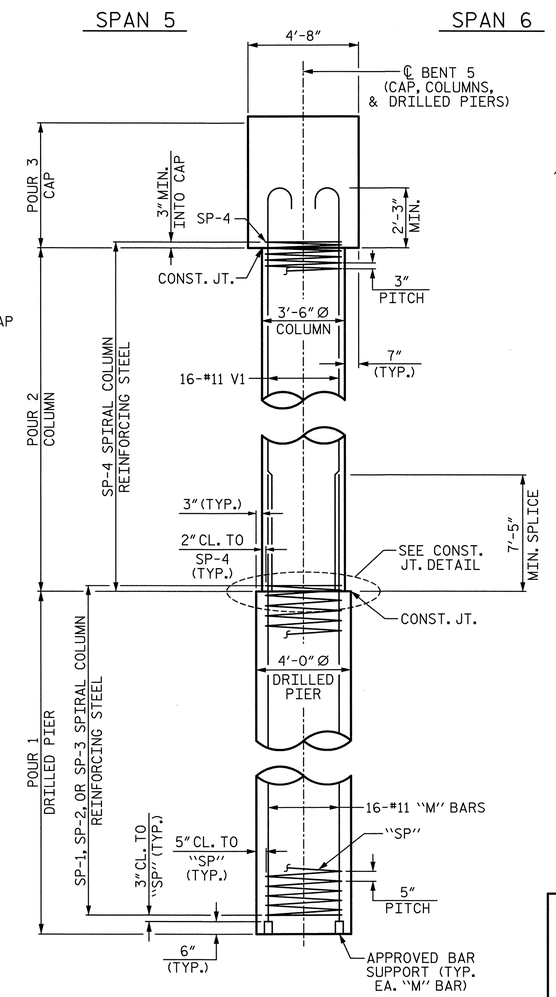

END ELEVATION

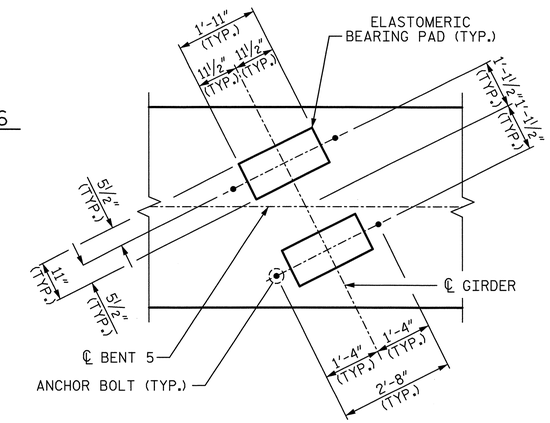

DETAIL "A"

TYP. EA. GIRDER

PROJECT NO. U-2524C

GUILFORD COUNTY

STATION: 9+75.28 -RPDY4-

SHEET 1 OF 2

PLANS PREPARED BY:

SIMPSON ENGINEERS & ASSOCIATES

5640 Dillard Drive
Suite 200
Cary, NC 27518
(919) 852-0468
(919) 852-0598 (Fax)
www.simpsonengr.com

LICENSURE NO. C-2521

NORTH CAROLINA PROFESSIONAL SEAL 023908 ENGINEER MARK A. AVERETTE

6-5-2013

STATE OF NORTH CAROLINA
DEPARTMENT OF TRANSPORTATION
RALEIGH

SUBSTRUCTURE

BENT 5

-RAMP D-

REVISIONS						SHEET NO.
NO.	BY:	DATE:	NO.	BY:	DATE:	S-826
1			3			TOTAL SHEETS
2			4			836

DRAWN BY: R. SEALEY DATE: 4-13
CHECKED BY: M. AVERETTE DATE: 4-13
DESIGN ENGINEER OF RECORD: M. AVERETTE DATE: 4-13

6/5/2013 2:40:09 PM G:\Projects\2011\U-2524 (Guilford Co)\Structures\Ramp D\Drawings\Final\U-2524_sd_rpd_bt5.dgn

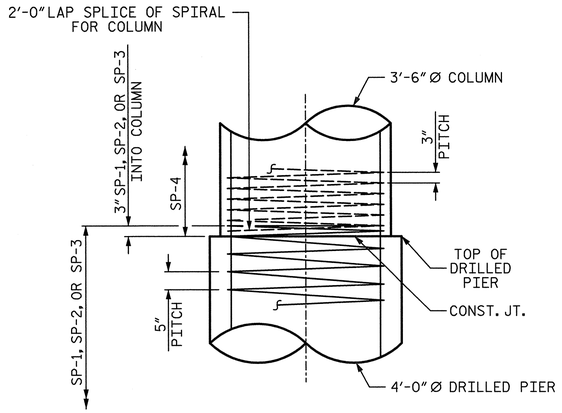

CONSTRUCTION JOINT DETAIL

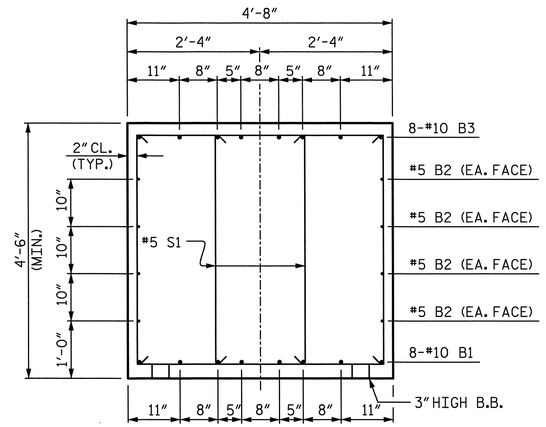

SECTION A-A

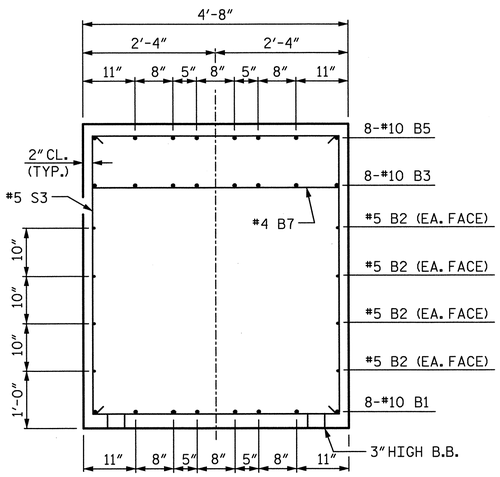

SECTION B-B

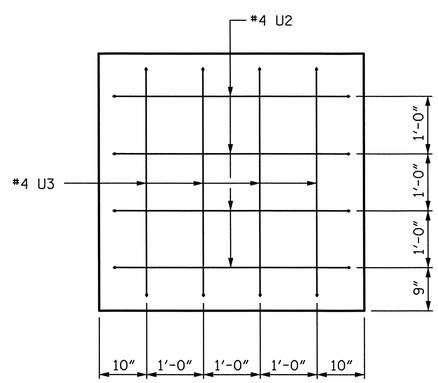

VIEW X-X

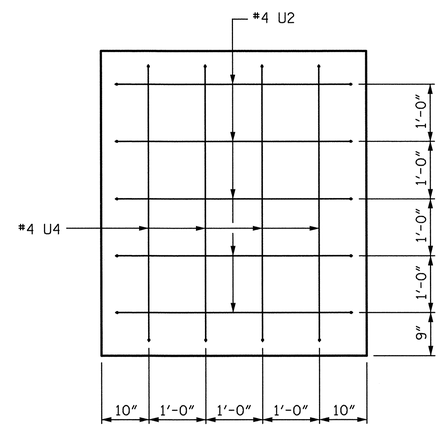

VIEW Y-Y

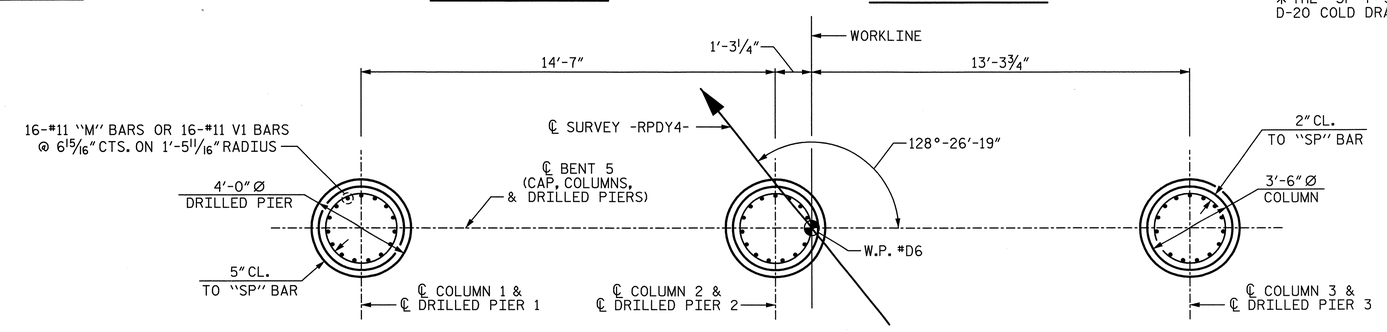

PLAN OF DRILLED PIERS & COLUMNS

(DIMENSIONS AND REINFORCING STEEL SHOWN ARE TYPICAL FOR EACH COLUMN AND DRILLED PIER)

BAR TYPES

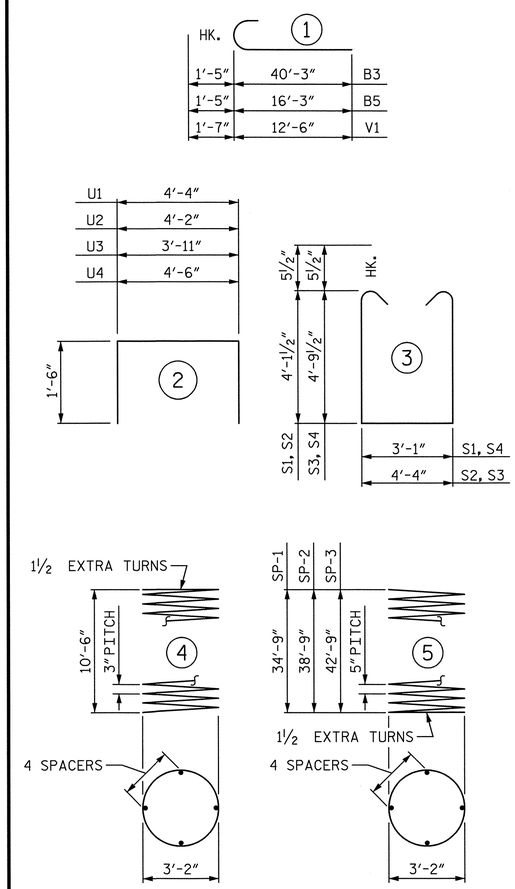

ALL BAR DIMENSIONS ARE OUT TO OUT

BILL OF MATERIAL

BENT 5

BAR	NO.	SIZE	TYPE	LENGTH	WEIGHT
B1	8	10	STR	40'-4"	1388
B2	8	5	STR	40'-4"	337
B3	8	10	1	41'-8"	1434
B4	8	4	STR	11'-8"	62
B5	8	10	1	17'-8"	608
B6	8	4	STR	4'-6"	24
B7	5	4	STR	4'-4"	14
M1	16	11	STR	42'-2"	3585
M2	16	11	STR	46'-2"	3925
M3	16	11	STR	50'-2"	4265
S1	20	5	3	12'-3"	256
S2	18	5	3	13'-6"	253
S3	12	5	3	14'-10"	186
S4	20	5	3	13'-7"	283
U1	44	4	2	7'-4"	216
U2	9	4	2	7'-2"	43
U3	4	4	2	6'-11"	18
U4	4	4	2	7'-6"	20
V1	48	11	1	14'-1"	3592
SP-1	1	✱✱	5	832'-6"	868
SP-2	1	✱✱	5	930'-5"	970
SP-3	1	✱✱	5	1028'-4"	1073
SP-4	3	✱	4	432'-2"	866

REINFORCING STEEL	20509 LB
SPIRAL COL. REINF. STEEL	3777 LB
CLASS "A" CONCRETE BREAKDOWN	
POUR 2 (COLUMNS)	11.0 CY
POUR 3 (CAP)	34.5 CY
TOTAL	45.5 CY
DRILLED PIERS:	
DRILLED PIER CONCRETE POUR 1 (DRILLED PIERS)	54.9 CY
4'-0" Ø DRILLED PIER NOT IN SOIL	26.0 LF
4'-0" Ø DRILLED PIER IN SOIL	91.8 LF
CSL TUBES	489 LF

✱✱ THE "SP-1", "SP-2", AND "SP-3" SPIRAL REINFORCING STEEL SHALL BE W31 OR D-31 COLD DRAWN WIRE OR #5 PLAIN OR DEFORMED BAR.

✱ THE "SP-4" SPIRAL REINFORCING STEEL SHALL BE W20 OR D-20 COLD DRAWN WIRE OR #4 PLAIN OR DEFORMED BAR.

PROJECT NO. U-2524C

GUILFORD COUNTY

STATION: 9+75.28 -RPDY4-

SHEET 2 OF 2

STATE OF NORTH CAROLINA
DEPARTMENT OF TRANSPORTATION
RALEIGH

SUBSTRUCTURE

BENT 5

-RAMP D-

PLANS PREPARED BY:

SIMPSON ENGINEERS & ASSOCIATES
5640 Dillard Drive
Suite 200
Cary, NC 27518
(919) 852-0468
(919) 852-0598 (Fax)
www.simpsonengr.com
LICENSURE NO. C-2521

NORTH CAROLINA PROFESSIONAL SEAL 023906 ENGINEER MARK A. AVERETTE
6-5-2013

REVISIONS								SHEET NO.
NO.	BY:	DATE:	NO.	BY:	DATE:			S-827
1			3					TOTAL SHEETS
2			4					836

DRAWN BY: R. SEALEY DATE: 4-13
CHECKED BY: M. AVERETTE DATE: 4-13
DESIGN ENGINEER OF RECORD: M. AVERETTE DATE: 4-13

6/5/2013 2:40:13 PM G:\Projects\2011\U-2524 (Guilford Co)\Structures\Ramp D\Drawings\Final\U-2524_sd_rpd_bt5.dgn

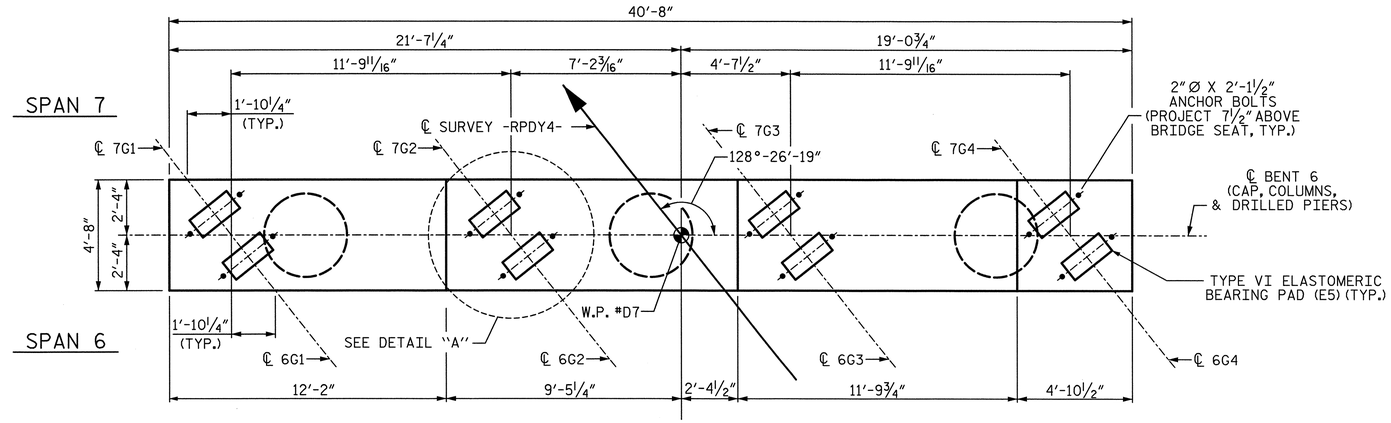

PLAN

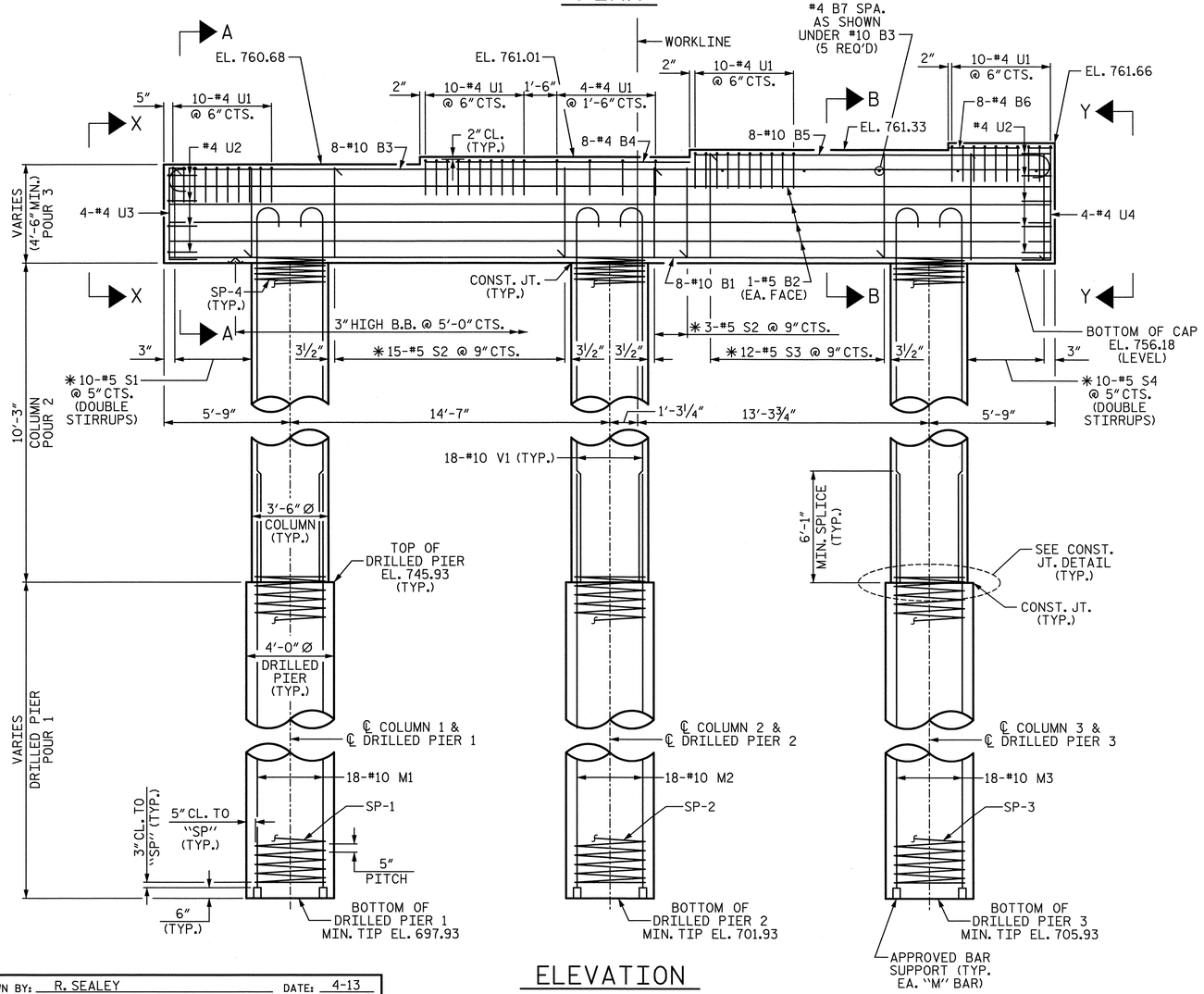

ELEVATION

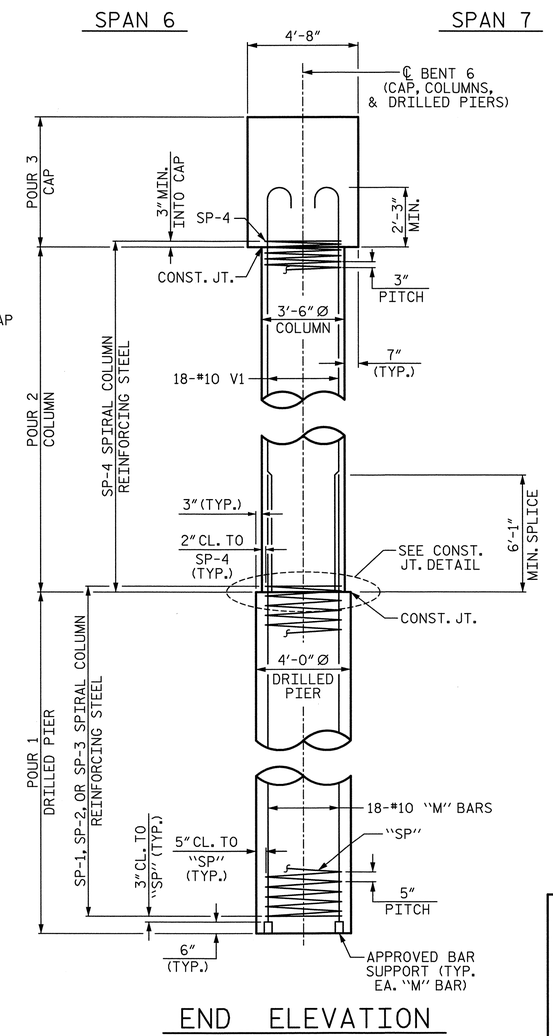

END ELEVATION

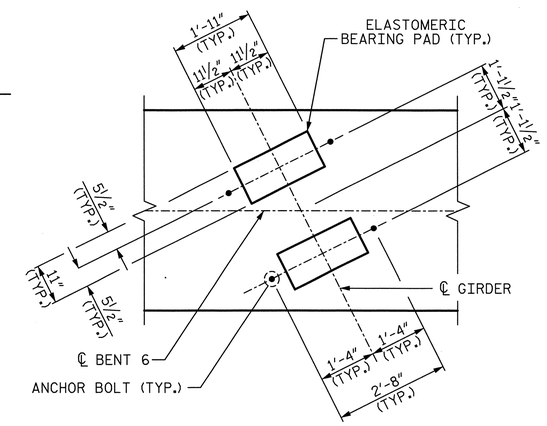

DETAIL "A"

TYP. EA. GIRDER

NOTES:

* INVERT ALTERNATE STIRRUPS.

STIRRUPS AND "U" BARS IN CAP MAY BE SHIFTED AS NECESSARY TO CLEAR ANCHOR BOLTS.

HOOKS ON "V" BARS MAY BE TURNED AS NECESSARY FOR PLACING REINFORCING STEEL.

ALL STEEL IN THE DRILLED PIERS IS INCLUDED IN THE PAY ITEMS FOR "REINFORCING STEEL" AND "SPIRAL COLUMN REINFORCING STEEL".

PROJECT NO. U-2524C

GUILFORD COUNTY

STATION: 9+75.28 -RPDY4-

SHEET 1 OF 2

PLANS PREPARED BY:

SIMPSON ENGINEERS & ASSOCIATES

5640 Dillard Drive
Suite 200
Cary, NC 27518
(919) 852-0468
(919) 852-0598 (Fax)
www.simpsonengr.com

LICENSURE NO. C-2521

NORTH CAROLINA PROFESSIONAL SEAL 023906 ENGINEER MARK A. AVERETTE

6-5-2013

STATE OF NORTH CAROLINA
DEPARTMENT OF TRANSPORTATION
RALEIGH

SUBSTRUCTURE

BENT 6

-RAMP D-

REVISIONS						SHEET NO.
NO.	BY:	DATE:	NO.	BY:	DATE:	S-828
1			3			TOTAL SHEETS
2			4			836

DRAWN BY: R. SEALEY DATE: 4-13
CHECKED BY: M. AVERETTE DATE: 4-13
DESIGN ENGINEER OF RECORD: M. AVERETTE DATE: 4-13

6/5/2013 2:40:19 PM G:\Projects\2011\U-2524 (Guilford Co)\Structures\Ramp D\Drawings\Final\U-2524_sd_rpd_bt6.dgn

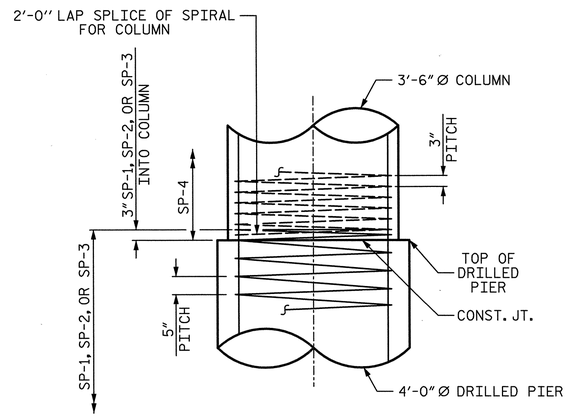

CONSTRUCTION JOINT DETAIL

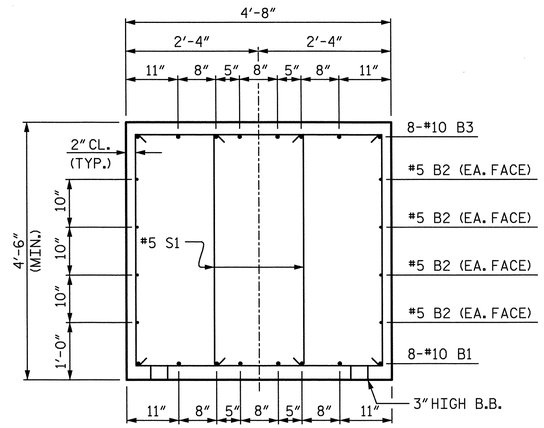

SECTION A-A

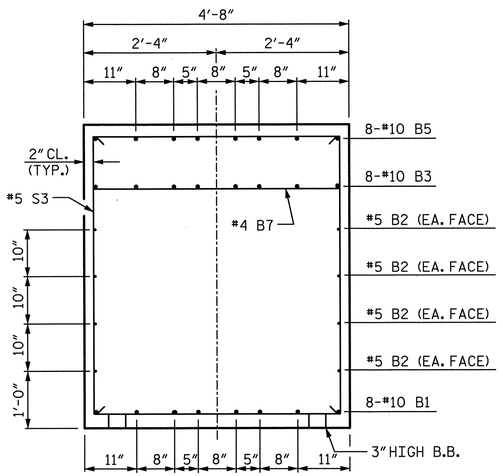

SECTION B-B

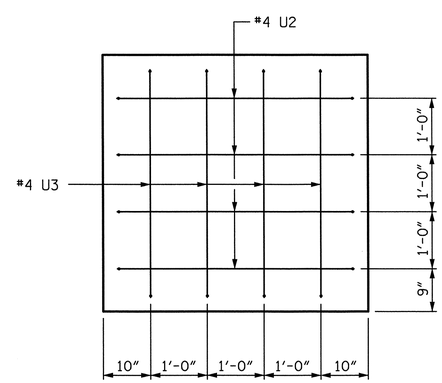

VIEW X-Y

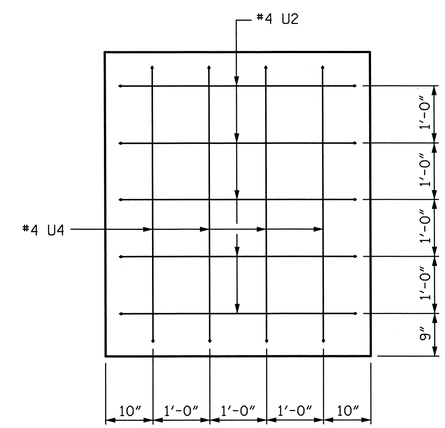

VIEW Y-Y

BAR TYPES

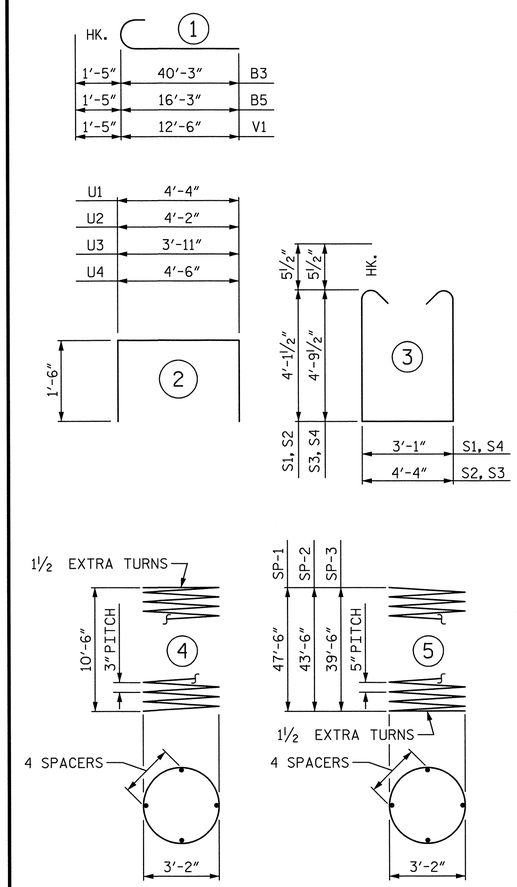

ALL BAR DIMENSIONS ARE OUT TO OUT

BILL OF MATERIAL

BENT 6

BAR	NO.	SIZE	TYPE	LENGTH	WEIGHT
B1	8	10	STR	40'-4"	1388
B2	8	5	STR	40'-4"	337
B3	8	10	1	41'-8"	1434
B4	8	4	STR	11'-8"	62
B5	8	10	1	17'-8"	608
B6	8	4	STR	4'-6"	24
B7	5	4	STR	4'-4"	14
M1	18	10	STR	53'-7"	4150
M2	18	10	STR	49'-7"	3840
M3	18	10	STR	45'-7"	3531
S1	20	5	3	12'-3"	256
S2	18	5	3	13'-6"	253
S3	12	5	3	14'-10"	186
S4	20	5	3	13'-7"	283
U1	44	4	2	7'-4"	216
U2	9	4	2	7'-2"	43
U3	4	4	2	6'-11"	18
U4	4	4	2	7'-6"	20
V1	54	10	1	13'-11"	3234
SP-1	1	✱✱	5	1136'-1"	1185
SP-2	1	✱✱	5	1038'-2"	1083
SP-3	1	✱✱	5	950'-0"	991
SP-4	3	✱	4	432'-2"	866

REINFORCING STEEL	19897 LB
SPIRAL COL. REINF. STEEL	4125 LB
CLASS "A" CONCRETE BREAKDOWN	
POUR 2 (COLUMNS)	11.0 CY
POUR 3 (CAP)	34.5 CY
TOTAL	45.5 CY
DRILLED PIERS:	
DRILLED PIER CONCRETE POUR 1 (DRILLED PIERS)	61.5 CY
4'-0" Ø DRILLED PIER NOT IN SOIL	27.0 LF
4'-0" Ø DRILLED PIER IN SOIL	105.0 LF
CSL TUBES	546.0 LF

✱✱ THE "SP-1", "SP-2", AND "SP-3" SPIRAL REINFORCING STEEL SHALL BE W31 OR D-31 COLD DRAWN WIRE OR #5 PLAIN OR DEFORMED BAR.

✱ THE "SP-4" SPIRAL REINFORCING STEEL SHALL BE W20 OR D-20 COLD DRAWN WIRE OR #4 PLAIN OR DEFORMED BAR.

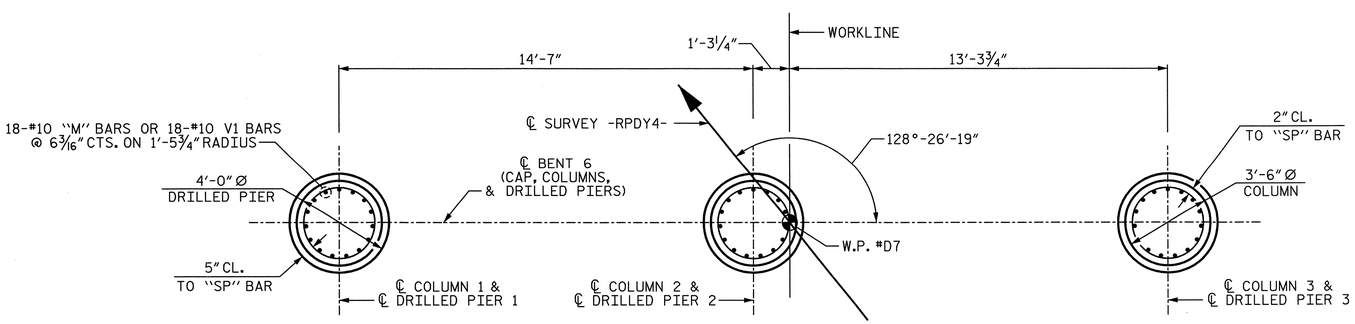

PLAN OF DRILLED PIERS & COLUMNS

(DIMENSIONS AND REINFORCING STEEL SHOWN ARE TYPICAL FOR EACH COLUMN AND DRILLED PIER)

PROJECT NO. U-2524C
GUILFORD COUNTY
STATION: 9+75.28 -RPDY4-

SHEET 2 OF 2

STATE OF NORTH CAROLINA
DEPARTMENT OF TRANSPORTATION
RALEIGH

SUBSTRUCTURE

BENT 6

-RAMP D-

PLANS PREPARED BY:
SIMPSON ENGINEERS & ASSOCIATES
5640 Dillard Drive
Suite 200
Cary, NC 27518
(919) 852-0468
(919) 852-0598 (Fax)
www.simpsonengr.com
LICENSURE NO. C-2521

NORTH CAROLINA PROFESSIONAL SEAL 023908 ENGINEER MARK A. AVERETTE
6-5-2013

REVISIONS								SHEET NO.
NO.	BY:	DATE:	NO.	BY:	DATE:			S-829
1			3					TOTAL SHEETS
2			4					836

DRAWN BY: R. SEALEY DATE: 4-13
CHECKED BY: M. AVERETTE DATE: 4-13
DESIGN ENGINEER OF RECORD: M. AVERETTE DATE: 4-13

6/5/2013 2:40:23 PM G:\Projects\2011\U-2524 (Guilford Co)\Structures\Ramp D\Drawings\Final\U-2524_sd_rpd_bt6.dgn

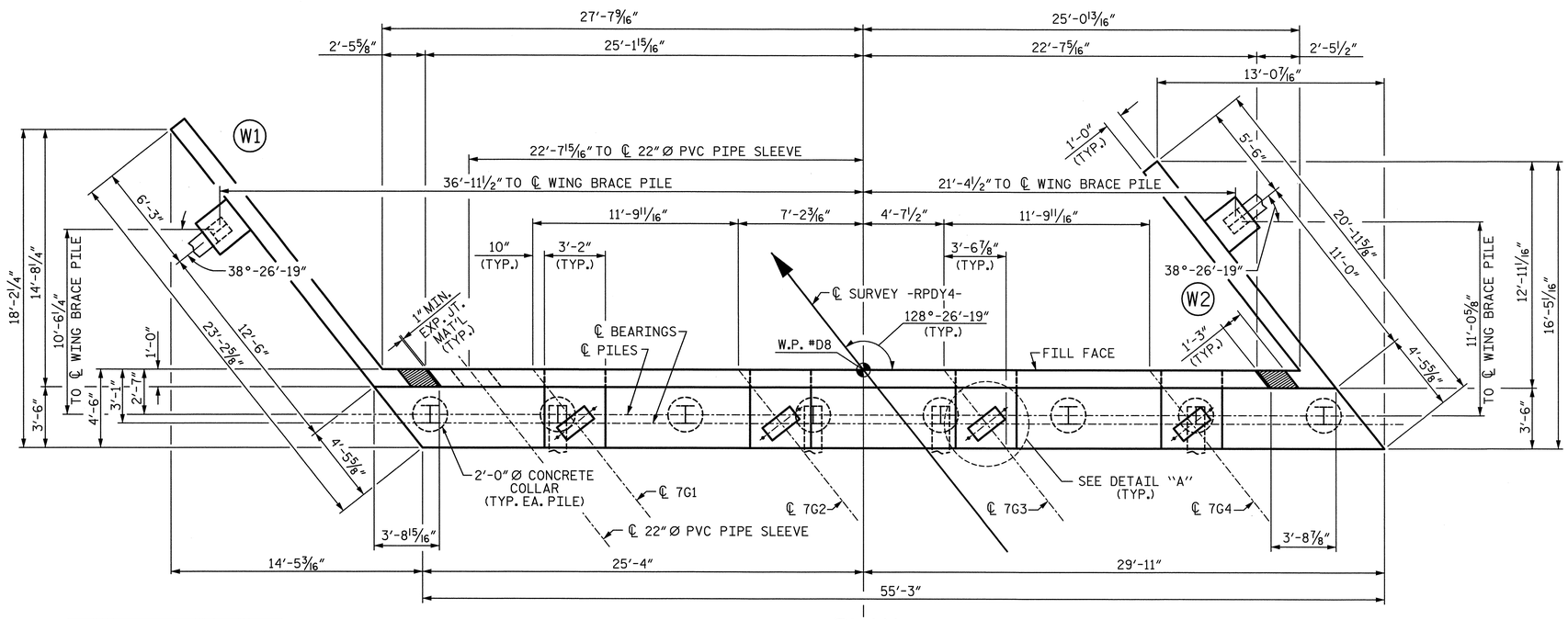

PLAN

SPLICE CHART
#4 B2 SPLICE LENGTH = 2'-5"
#4 K1 SPLICE LENGTH = 2'-5"

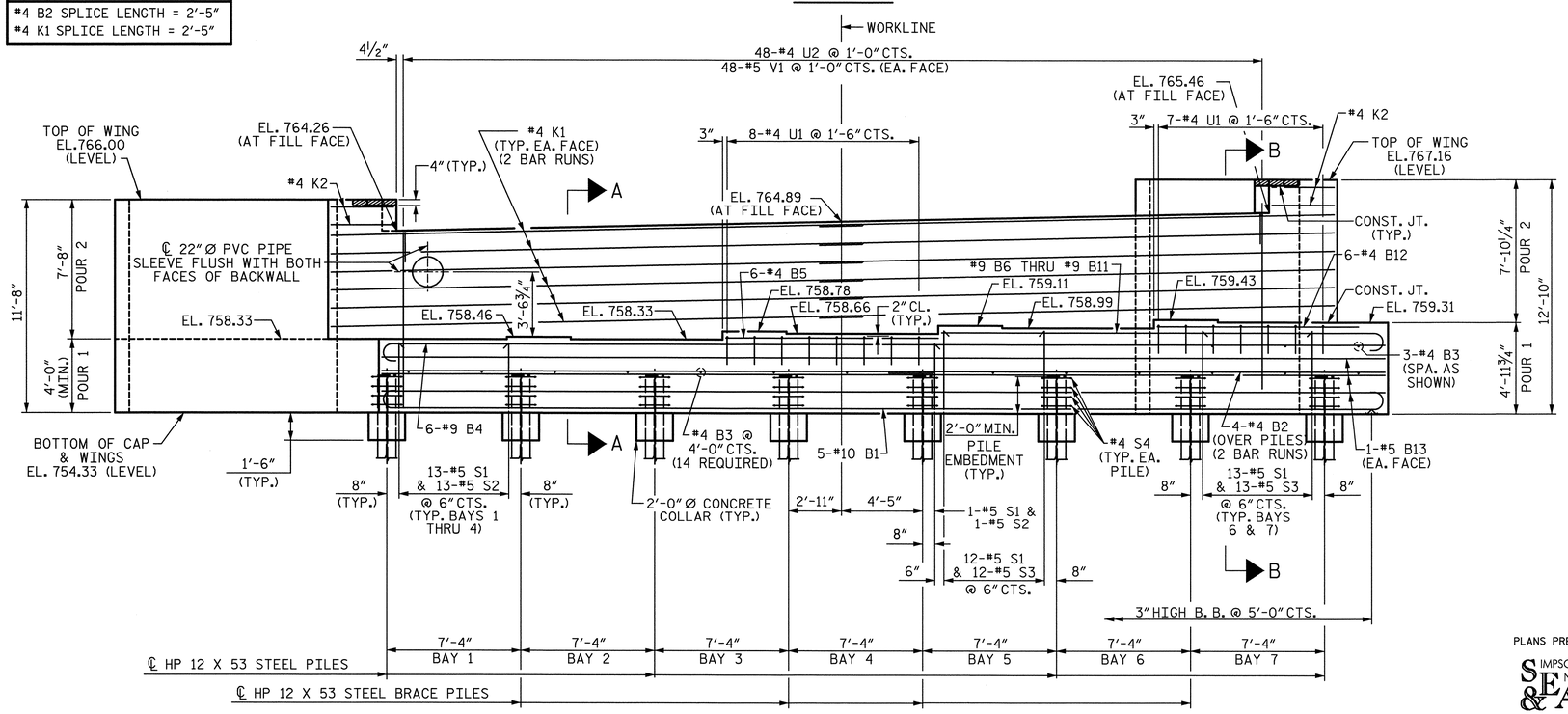

ELEVATION

FOR CLARITY, WING BRACE PILE NOT SHOWN

NOTES:

STIRRUPS AND "U" BARS IN CAP MAY BE SHIFTED AS NECESSARY TO CLEAR ANCHOR BOLTS.

BACKWALL SHALL BE PLACED BEFORE APPLYING THE EPOXY PROTECTIVE COATING.

THE CONCRETE IN THE SHADED AREA OF THE WING SHALL BE POURED AFTER THE BARRIER RAIL IS CAST IF SLIP FORMING IS USED.

THE TOP SURFACE AREAS OF THE END BENT CAPS SHALL BE CURED IN ACCORDANCE WITH THE STANDARD SPECIFICATIONS EXCEPT THE MEMBRANE CURING COMPOUND METHOD SHALL NOT BE USED.

THE TOP SURFACE OF THE CAP EXCEPT THE BRIDGE SEAT BUILDUPS SHALL BE SLOPED TRANSVERSELY FROM THE FILL FACE TO THE BACK FACE AT THE RATE OF 2%.

THE CONTRACTOR SHALL PROVIDE FOR INSTALLATION OF THE 4" DIAMETER DRAIN PIPE THROUGH THE WING WALL AS REQUIRED FOR REINFORCED BRIDGE APPROACH FILLS. SEE THE ROADWAY PLANS. REINFORCING STEEL IN THE WING WALL MAY BE SHIFTED AS NECESSARY TO CLEAR THE DRAIN PIPE.

SEE GENERAL DRAWING "FOUNDATION LAYOUT" FOR ADDITIONAL NOTES FOR DRIVING PILES.

REINFORCING STEEL IN BACKWALL SHALL BE FIELD BENT AS NECESSARY FOR INSTALLATION OF THE 22"Ø PVC PIPE SLEEVE.

SEE "CLOSED DRAINAGE SYSTEM DETAILS" SHEETS FOR 22"Ø PVC PIPE SLEEVE DETAILS.

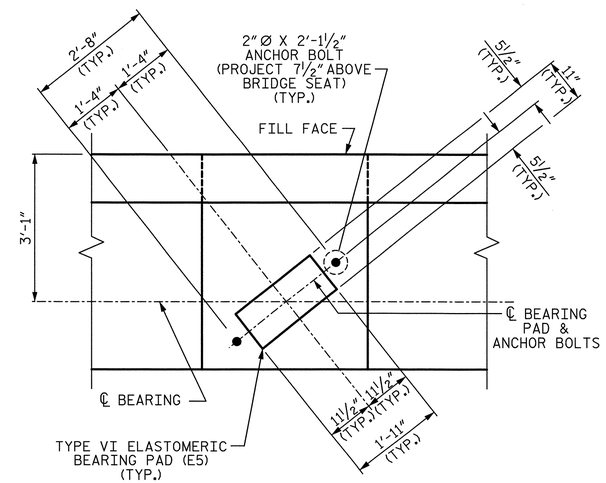

DETAIL "A"

TYP. EA. GIRDER

PROJECT NO. U-2524C

GUILFORD COUNTY

STATION: 9+75.28 -RPDY4-

SHEET 1 OF 3

STATE OF NORTH CAROLINA
DEPARTMENT OF TRANSPORTATION
RALEIGH

SUBSTRUCTURE

END BENT 2

-RAMP D-

REVISIONS								SHEET NO.
NO.	BY:	DATE:	NO.	BY:	DATE:			S-830
1			3					TOTAL SHEETS
2			4					836

PLANS PREPARED BY:

SIMPSON ENGINEERS & ASSOCIATES
5640 Dillard Drive
Suite 200
Cary, NC 27518
(919) 852-0468
(919) 852-0598 (Fax)
www.simpsonengr.com
LICENSURE NO. C-2521

NORTH CAROLINA PROFESSIONAL SEAL 023906 ENGINEER MARK A. AVERETTE
6-5-2013

DRAWN BY:	D. G. VESTER	DATE:	4-13
CHECKED BY:	M. AVERETTE	DATE:	4-13
DESIGN ENGINEER OF RECORD:	M. AVERETTE	DATE:	4-13

6/5/2013 2:40:28 PM G:\Projects\2011\U-2524 (Guilford Co)\Structures\Ramp D\Drawings\Final\U-2524_sd_rpd_eb12.dgn

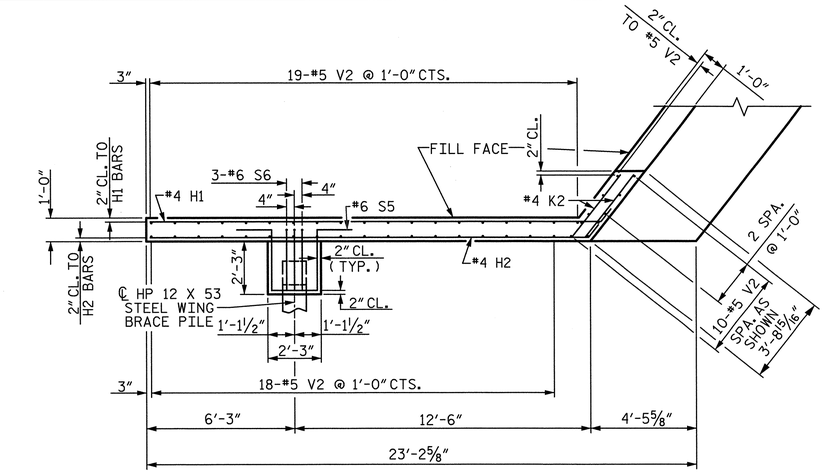

PLAN OF WING (W1)

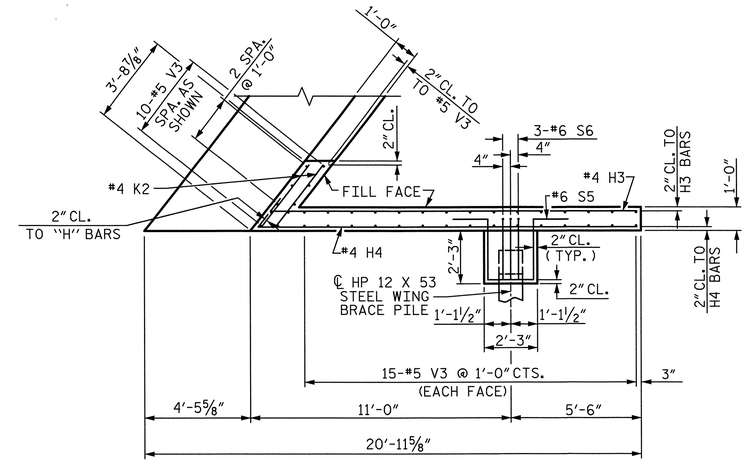

PLAN OF WING (W2)

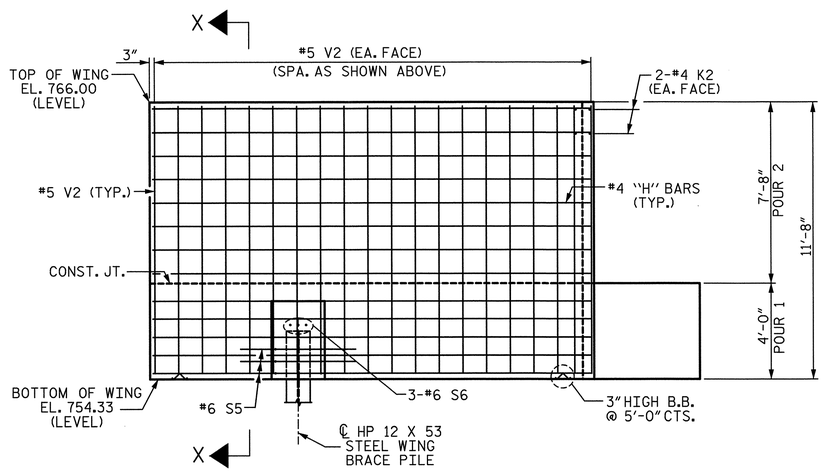

ELEVATION OF WING (W1)

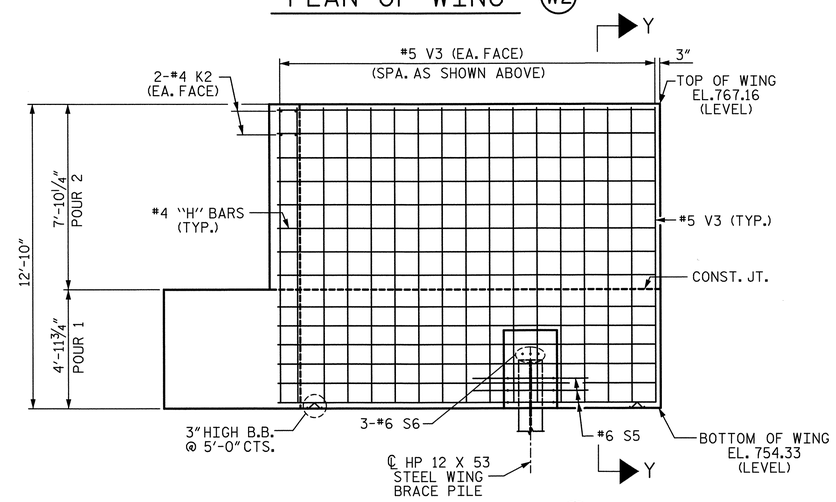

ELEVATION OF WING (W2)

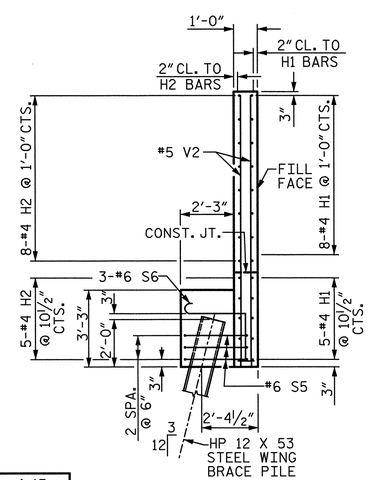

SECTION X-X

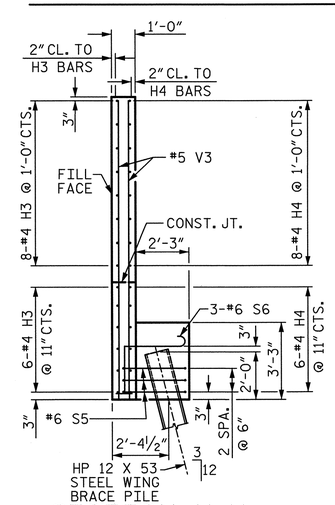

SECTION Y-Y

PROJECT NO. U-2524C

GUILFORD COUNTY

STATION: 9+75.28 -RPDY4-

SHEET 2 OF 3

STATE OF NORTH CAROLINA
DEPARTMENT OF TRANSPORTATION
RALEIGH

SUBSTRUCTURE

END BENT 2

-RAMP D-

PLANS PREPARED BY:

SIMPSON ENGINEERS & ASSOCIATES
5640 Dillard Drive
Suite 200
Cary, NC 27518
(919) 852-0468
(919) 852-0598 (Fax)
www.simpsonengr.com
LICENSURE NO. C-2521

NORTH CAROLINA PROFESSIONAL SEAL 023908 ENGINEER MARK A. AVERETTE
6-5-2013

REVISIONS						SHEET NO.
NO.	BY:	DATE:	NO.	BY:	DATE:	S-831
1			3			TOTAL SHEETS
2			4			836

DRAWN BY: D. G. VESTER DATE: 4-13
CHECKED BY: M. AVERETTE DATE: 4-13
DESIGN ENGINEER OF RECORD: M. AVERETTE DATE: 4-13

6/5/2013 2:40:32 PM G:\Projects\2011\U-2524 (Guilford Co)\Structures\Ramp D\Drawings\Final\U-2524_sd_rpd_eb1-2.dgn

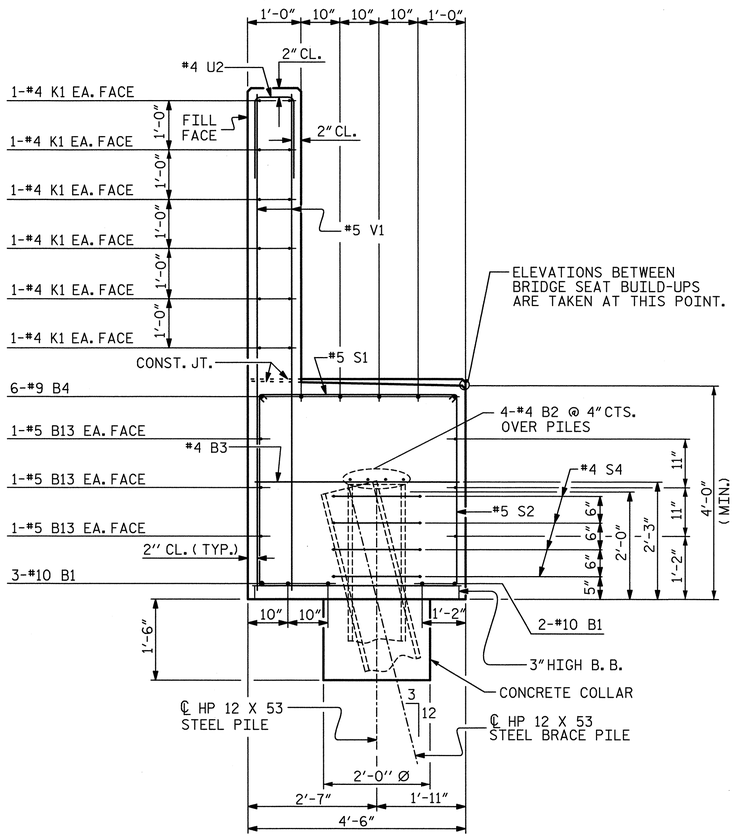

SECTION A-A

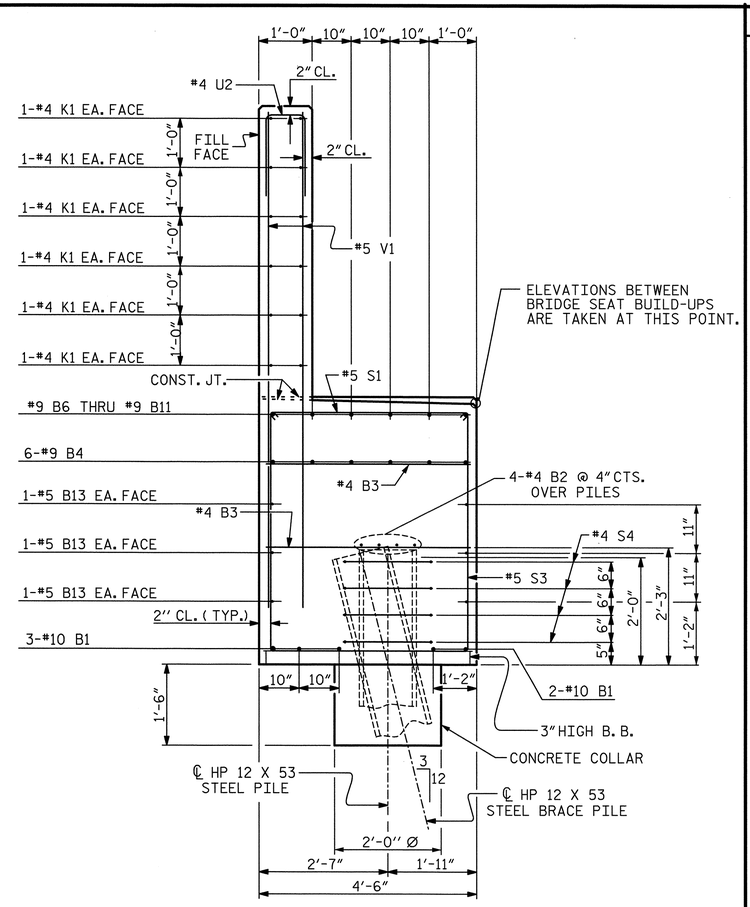

SECTION B-B

BAR TYPES

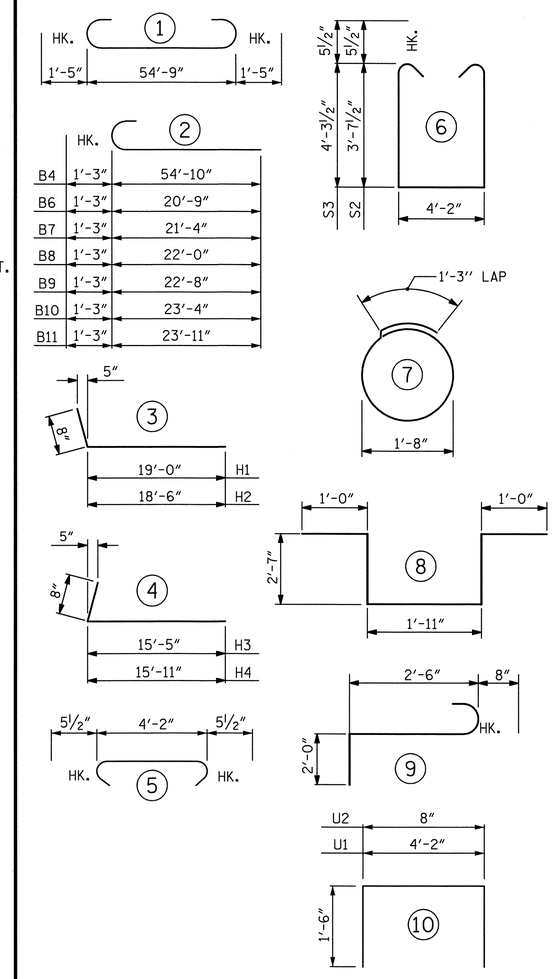

ALL BAR DIMENSIONS ARE OUT TO OUT

BILL OF MATERIAL
END BENT 2

BAR	NO.	SIZE	TYPE	LENGTH	WEIGHT
B1	5	10	1	57'-7"	1239
B2	8	4	STR	28'-8"	153
B3	17	4	STR	4'-2"	47
B4	6	9	2	56'-1"	1144
B5	6	4	STR	11'-7"	46
B6	1	9	2	22'-0"	75
B7	1	9	2	22'-7"	77
B8	1	9	2	23'-3"	79
B9	1	9	2	23'-11"	81
B10	1	9	2	24'-7"	84
B11	1	9	2	25'-2"	86
B12	6	4	STR	9'-0"	36
B13	6	5	STR	54'-11"	344
H1	13	4	3	19'-8"	171
H2	13	4	3	19'-2"	166
H3	14	4	4	16'-1"	150
H4	14	4	4	16'-7"	155
K1	24	4	STR	28'-8"	460
K2	8	4	STR	3'-3"	17
S1	91	5	5	5'-1"	482
S2	53	5	6	12'-4"	682
S3	38	5	6	13'-8"	542
S4	32	4	7	6'-6"	139
S5	6	6	8	9'-1"	82
S6	6	6	9	5'-2"	47
U1	15	4	10	7'-2"	72
U2	48	4	10	3'-8"	118
V1	96	5	STR	9'-7"	960
V2	47	5	STR	11'-4"	556
V3	40	5	STR	12'-6"	522
TOTAL REINFORCING STEEL					8812 LB

CLASS "A" CONCRETE BREAKDOWN	
POUR 1	
(CAP, COLLARS, & LOWER WINGS)	49.3 CY
POUR 2 (BACKWALL & UPPER WINGS)	22.9 CY
TOTAL CLASS "A" CONCRETE	72.2 CY
HP 12 X 53 STEEL PILES	
NO. 10	450.0 LF

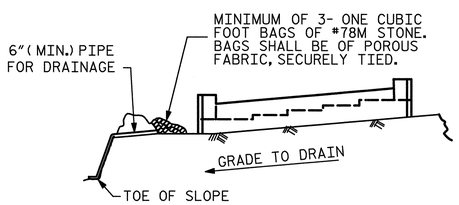

BAGGED STONE AND PIPE SHALL BE PLACED IMMEDIATELY AFTER COMPLETION OF END BENT EXCAVATION. PIPE MAY BE EITHER CONCRETE, CORRUGATED STEEL, CORRUGATED ALUMINUM ALLOY, OR CORRUGATED PLASTIC. PERFORATED PIPE WILL NOT BE ALLOWED.

BAGGED STONE SHALL REMAIN IN PLACE UNTIL THE ENGINEER DIRECTS THAT IT BE REMOVED. THE CONTRACTOR SHALL REMOVE AND DISPOSE OF SILT ACCUMULATIONS AT BAGGED STONE WHEN SO DIRECTED BY THE ENGINEER. BAGS SHALL BE REMOVED AND REPLACED WHENEVER THE ENGINEER DETERMINES THAT THEY HAVE DETERIORATED AND LOST THEIR EFFECTIVENESS.

NO SEPARATE PAYMENT WILL BE MADE FOR THIS WORK AND THE ENTIRE COST OF THIS WORK SHALL BE INCLUDED IN THE UNIT CONTRACT PRICE BID FOR THE SEVERAL PAY ITEMS.

TEMPORARY DRAINAGE AT END BENT

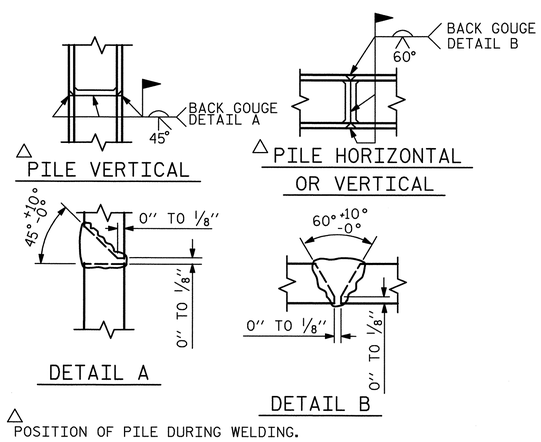

△ POSITION OF PILE DURING WELDING.

PILE SPLICE DETAILS

PROJECT NO. U-2524C
GUILFORD COUNTY
STATION: 9+75.28 -RPDY4-

SHEET 3 OF 3

STATE OF NORTH CAROLINA
DEPARTMENT OF TRANSPORTATION
RALEIGH
SUBSTRUCTURE

END BENT 2

-RAMP D-

PLANS PREPARED BY:
SIMPSON ENGINEERS & ASSOCIATES
5640 Dillard Drive
Suite 200
Cary, NC 27518
(919) 852-0468
(919) 852-0598 (Fax)
www.simpsonengr.com
LICENSURE NO. C-2521

NORTH CAROLINA PROFESSIONAL SEAL 023906 ENGINEER MARK A. AVERETTE
6-5-2013

REVISIONS							SHEET NO.
NO.	BY:	DATE:	NO.	BY:	DATE:		S-832
1			3				TOTAL SHEETS
2			4				836

DRAWN BY: D. G. VESTER DATE: 4-13
CHECKED BY: M. AVERETTE DATE: 4-13
DESIGN ENGINEER OF RECORD: M. AVERETTE DATE: 4-13

6/5/2013 2:40:36 PM G:\Projects\2011\U-2524 (Guilford Co)\Structures\Ramp D\Drawings\Final\U-2524_sd_rpd_eb+2.dgn

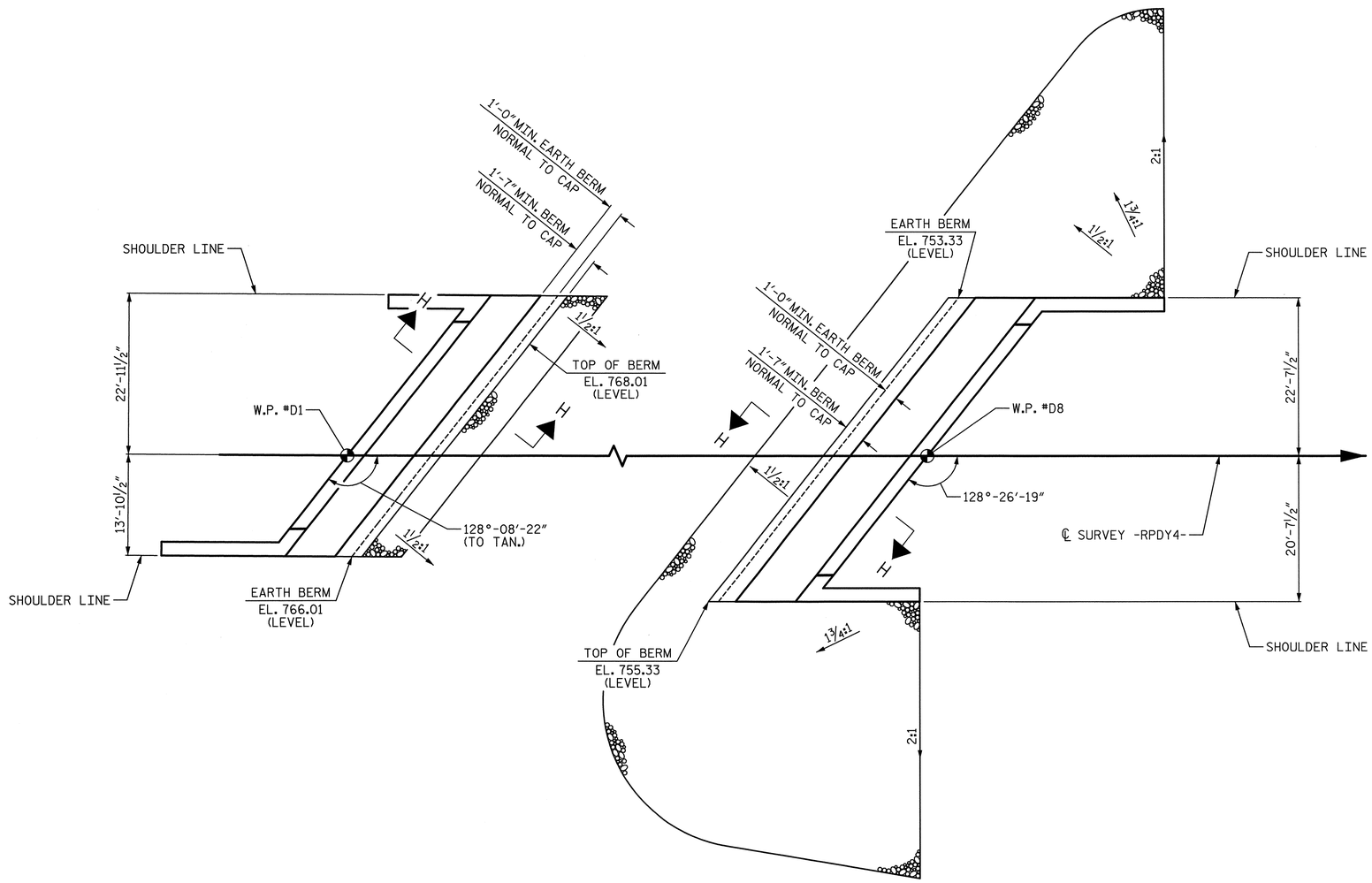

@ END BENT 1

@ END BENT 2

PLAN OF RIP RAP

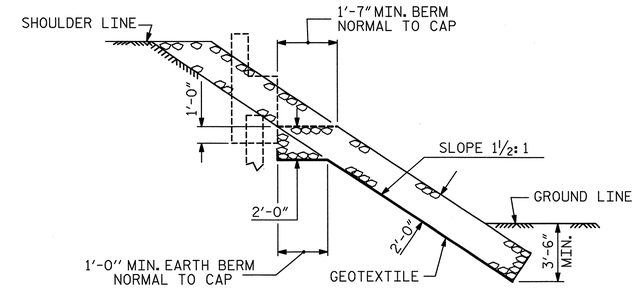

SECTION H-H

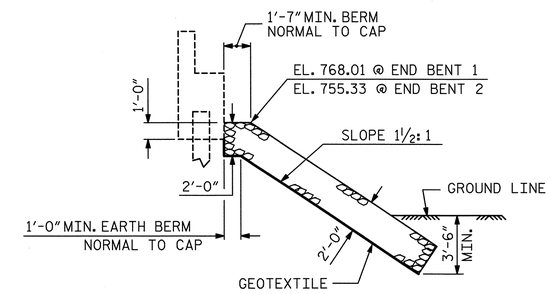

℄ SECTION BERM RIP RAPPED

ESTIMATED QUANTITIES		
BRIDGE @ STA. 9+75.28 -RPDY4-	RIP RAP CLASS II (2'-0" THICK)	GEOTEXTILE FOR DRAINAGE
	TONS	SQUARE YARDS
END BENT 1	30	35
END BENT 2	360	400

PROJECT NO. U-2524C

GUILFORD COUNTY

STATION: 9+75.28 -RPDY4-

STATE OF NORTH CAROLINA
DEPARTMENT OF TRANSPORTATION
RALEIGH

RIP RAP DETAILS

-RAMP D-

PLANS PREPARED BY:

SIMPSON ENGINEERS & ASSOCIATES
5640 Dillard Drive
Suite 200
Cary, NC 27518
(919) 852-0468
(919) 852-0598 (Fax)
www.simpsonengr.com
LICENSURE NO. C-2521

NORTH CAROLINA PROFESSIONAL ENGINEER SEAL 023906 MARK A. AVERETTE
6-5-2013

REVISIONS						SHEET NO.
NO.	BY:	DATE:	NO.	BY:	DATE:	S-833
1			3			TOTAL SHEETS
2			4			836

DRAWN BY: T. BANKOVICH DATE: 4-13
CHECKED BY: M. AVERETTE DATE: 4-13
DESIGN ENGINEER OF RECORD: M. AVERETTE DATE: 4-13

6/5/2013 2:40:41 PM G:\Projects\2011\U-2524 (Guilford Co)\Structures\Ramp D\Drawings\Final\U-2524_sd_rpd_rr.dgn

NOTES:

APPROACH SLAB SHALL NOT BE CONSTRUCTED PRIOR TO COMPLETION OF THE BRIDGE DECK.

FOR REINFORCED BRIDGE APPROACH FILL INCLUDING GEOTEXTILE, IMPERMEABLE GEOMEMBRANE, 4"Ø DRAINAGE PIPE, #78M STONE, AND SELECT MATERIAL, SEE ROADWAY PLANS.

AREA BETWEEN THE WINGWALL AND APPROACH SLAB SHALL BE GRADED TO DRAIN THE WATER AWAY FROM THE FILL FACE OF THE BRIDGE AND SHALL BE PAVED. SEE ROADWAY PLANS.

FOR EXPANSION JOINT SEALS, SEE SPECIAL PROVISIONS.

THE QUANTITY OF #4 J1 BARS ON THE BILL OF MATERIAL IS BASED ON 1'-0" CENTERS. J1 BARS SHALL BE PLACED AT EACH VERTICAL STUD ANCHOR BOLT. IN THE EVENT THAT THE NUMBER OF VERTICAL STUD ANCHORS EXCEEDS THE NUMBER OF J1 BARS SPECIFIED, ADDITIONAL J1 BARS WILL NOT BE REQUIRED.

"A" BARS IN APPROACH SLAB @ END BENT 1 SHALL BE SPACED ALONG EXTENDED TANGENT AND PLACED PARALLEL TO FILL FACE.

OUTSIDE EDGES OF APPROACH SLAB AT END BENT 1 ARE PARALLEL TO EXTENDED TANGENT.

BILL OF MATERIAL

APPROACH SLAB 1

BAR	NO.	SIZE	TYPE	LENGTH	WEIGHT
A1E	50	4	STR	20'-6"	685
A2	52	4	STR	20'-5"	709
B1E	58	5	STR	23'-7"	1427
B2	58	6	STR	24'-6"	2134
B3E	2	5	STR	10'-0"	21
B4	2	6	STR	10'-0"	30
B5E	2	5	STR	9'-8"	20
B6	2	6	STR	9'-8"	29
J1E	40	4	1	1'-5"	38
REINFORCING STEEL					2902 LB
EPOXY COATED REINFORCING STEEL					2191 LB
CLASS "AA" CONCRETE BREAKDOWN					
POUR 1 (SLAB & CURB) **					32.5 CY

"E" INDICATES EPOXY COATED REINFORCING STEEL

BAR TYPES

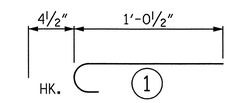

ALL BAR DIMENSIONS ARE OUT TO OUT

** QUANTITIES FOR BARRIER RAIL ARE NOT INCLUDED

SPLICE LENGTHS

BAR SIZE	EPOXY COATED	UNCOATED
#4	2'-0"	1'-9"
#5	2'-6"	2'-2"
#6	3'-10"	2'-7"

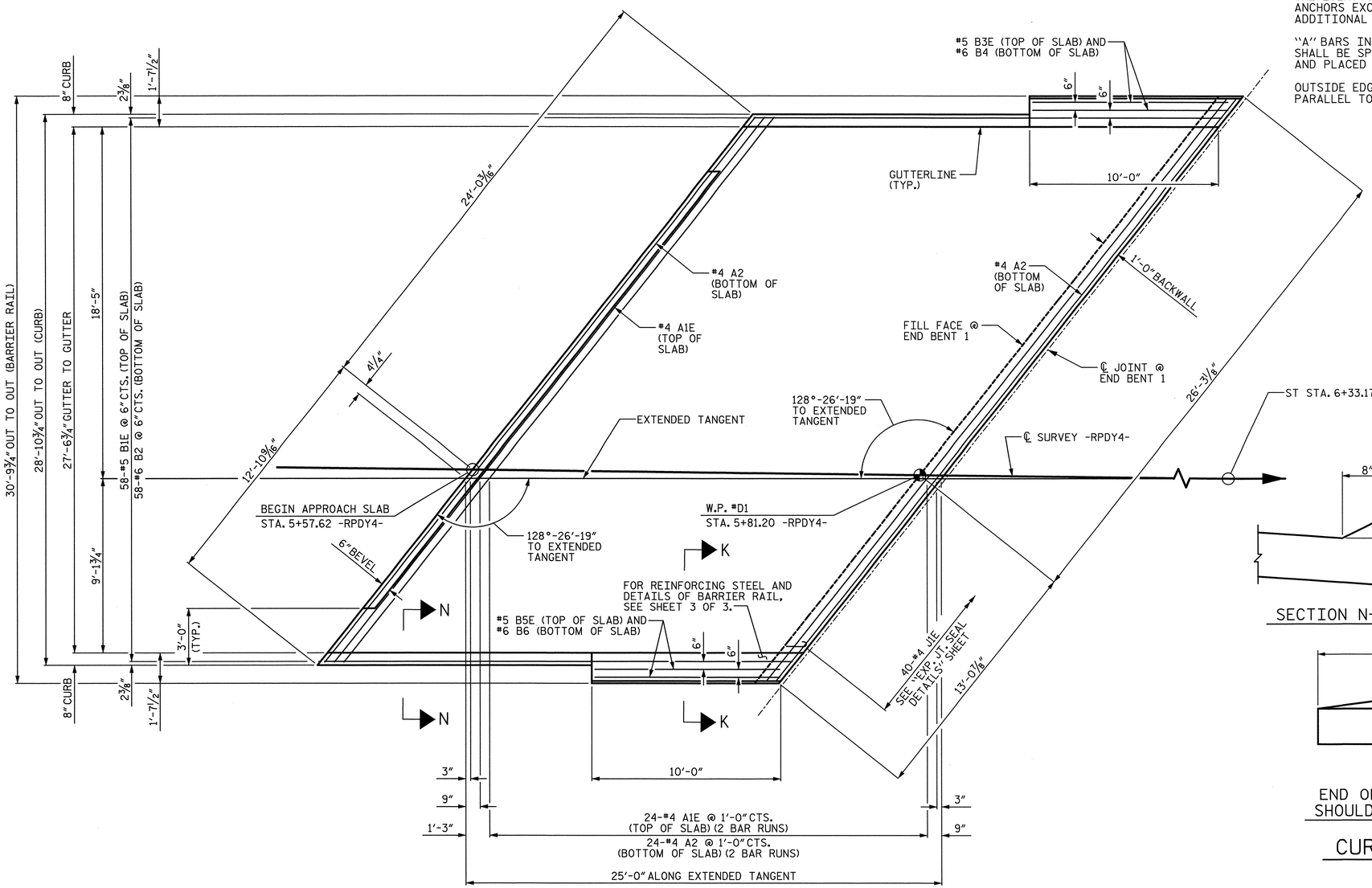

PLAN @ END BENT 1

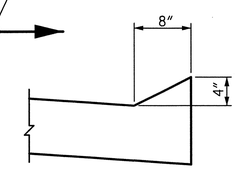

SECTION N-N

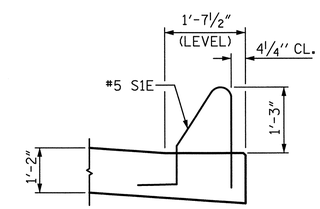

SECTION K-K

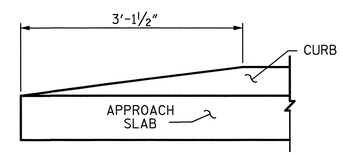

END OF CURB WITHOUT SHOULDER BERM GUTTER

CURB DETAILS

PROJECT NO. U-2524C

GUILFORD COUNTY

STATION: 9+75.28 -RPDY4-

SHEET 1 OF 3

STATE OF NORTH CAROLINA
DEPARTMENT OF TRANSPORTATION
RALEIGH

BRIDGE APPROACH SLAB PLAN

-RAMP D-

PLANS PREPARED BY:

SIMPSON ENGINEERS & ASSOCIATES
5640 Dillard Drive
Suite 200
Cary, NC 27518
(919) 852-0468
(919) 852-0598 (Fax)
www.simpsonengr.com
LICENSURE NO. C-2521

NORTH CAROLINA PROFESSIONAL SEAL 023908 ENGINEER MARK A. AVERETTE
6-5-2013

REVISIONS						SHEET NO.
NO.	BY:	DATE:	NO.	BY:	DATE:	S-834
1			3			TOTAL SHEETS
2			4			836

DRAWN BY: T. BANKOVICH DATE: 4-13
CHECKED BY: M. AVERETTE DATE: 4-13
DESIGN ENGINEER OF RECORD: M. AVERETTE DATE: 4-13

6/5/2013 2:40:46 PM G:\Projects\2011\U-2524 (Guilford Co)\Structures\Ramp D\Drawings\Final\U-2524_sd_rpd_as.dgn

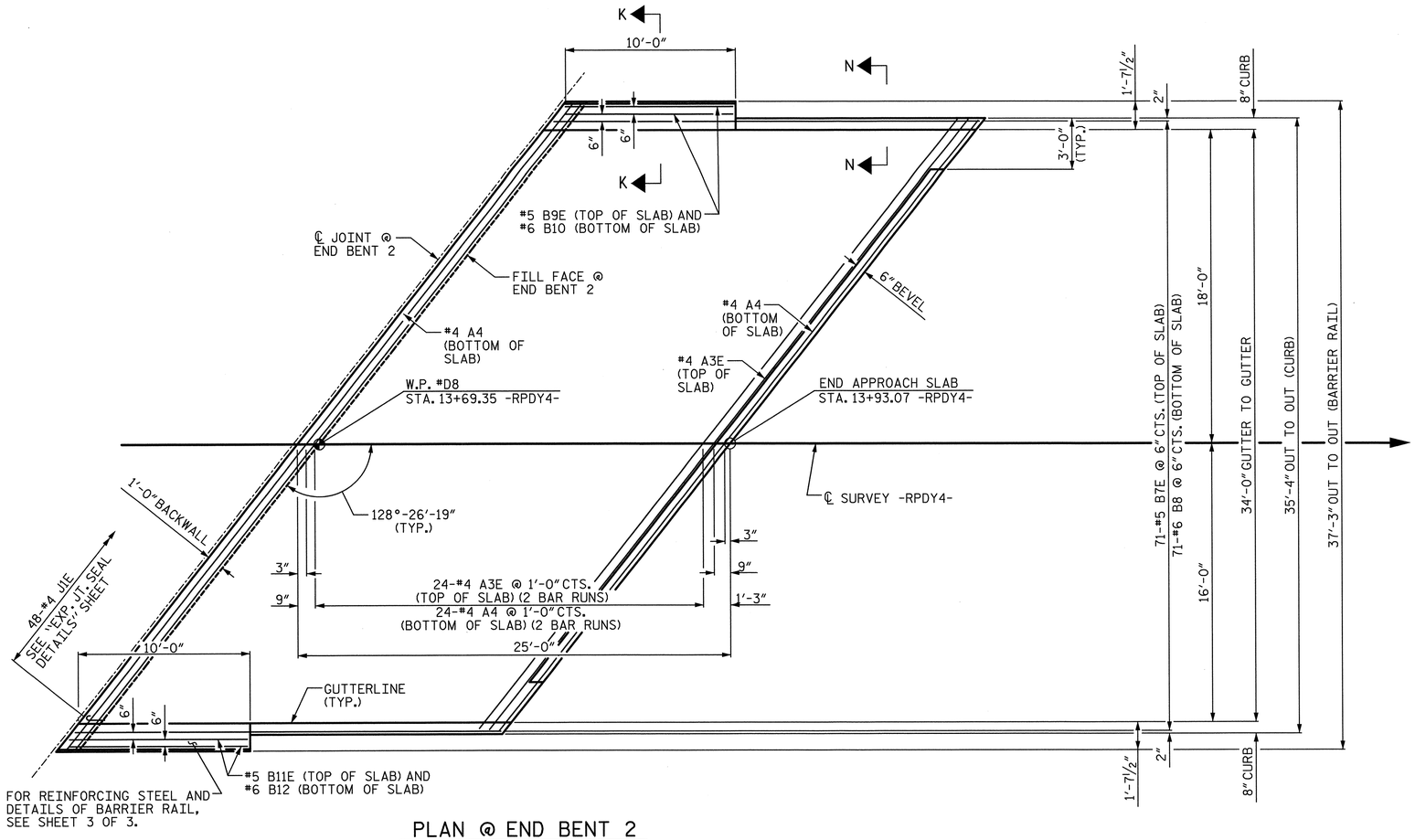

PLAN @ END BENT 2

NOTES:

FOR "SECTION N-N" AND "SECTION K-K", SEE SHEET 1 OF 3.

BILL OF MATERIAL
APPROACH SLAB 2

BAR	NO.	SIZE	TYPE	LENGTH	WEIGHT
A3E	50	4	STR	24'-8"	824
A4	52	4	STR	24'-6"	851
B7E	71	5	STR	23'-7"	1746
B8	71	6	STR	24'-6"	2613
B9E	2	5	STR	9'-8"	20
B10	2	6	STR	9'-8"	29
B11E	2	5	STR	10'-0"	21
B12	2	6	STR	10'-0"	30
J1E	48	4	1	1'-5"	45

REINFORCING STEEL	3523	LB
EPOXY COATED REINFORCING STEEL	2656	LB
CLASS "A" CONCRETE BREAKDOWN		
POUR 1 (SLAB & CURB) **	39.3	CY

"E" INDICATES EPOXY COATED REINFORCING STEEL

BAR TYPES

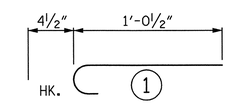

ALL BAR DIMENSIONS ARE OUT TO OUT

** QUANTITIES FOR BARRIER RAIL NOT INCLUDED

SPLICE LENGTHS

BAR SIZE	EPOXY COATED	UNCOATED
#4	2'-0"	1'-9"
#5	2'-6"	2'-2"
#6	3'-10"	2'-7"

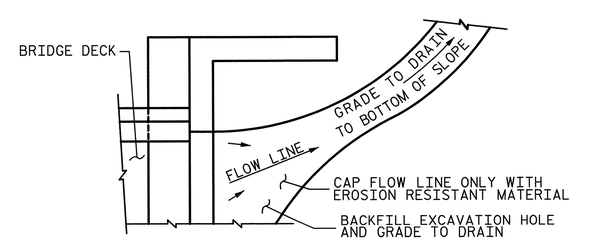

NOTE: IF THE APPROACH SLAB IS NOT CONSTRUCTED IMMEDIATELY AFTER THE BACKFILLING OF THE END BENT EXCAVATION, GRADE TO DRAIN TO THE BOTTOM OF THE SLOPE AND PROVIDE EROSION RESISTANT MATERIAL, SUCH AS FIBERGLASS ROVING OR AS DIRECTED BY THE ENGINEER TO PREVENT SOIL EROSION AND TO PROTECT THE AREA ADJACENT TO THE STRUCTURE. THE CONTRACTOR WILL BE REQUIRED TO REMOVE THESE MATERIALS PRIOR TO CONSTRUCTION OF THE APPROACH SLAB.

TEMPORARY DRAINAGE DETAIL

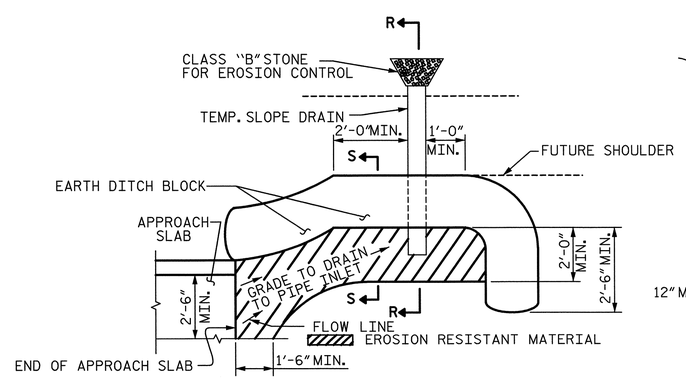

NOTE: IMMEDIATELY AFTER THE CONSTRUCTION OF THE APPROACH SLAB, THE CONTRACTOR SHALL PROVIDE TEMPORARY BERM AND SLOPE DRAIN. CONTRACTOR SHALL GRADE TO PIPE INLET AND PROVIDE EROSION RESISTANT MATERIAL AS SHOWN. THE EROSION RESISTANT MATERIAL SHALL BE EITHER 1) ASPHALT PLANT MIX, TYPE 1 OR TYPE 2, MIN. 2" DEPTH, 2) EROSION CONTROL MAT, OR 3) CONCRETE, AS DIRECTED BY THE ENGINEER. THE SLOPE DRAIN SHALL CONSIST OF A NON-PERFORATED TEMPORARY DRAINAGE PIPE, 12 INCHES IN DIAMETER.

PLAN VIEW

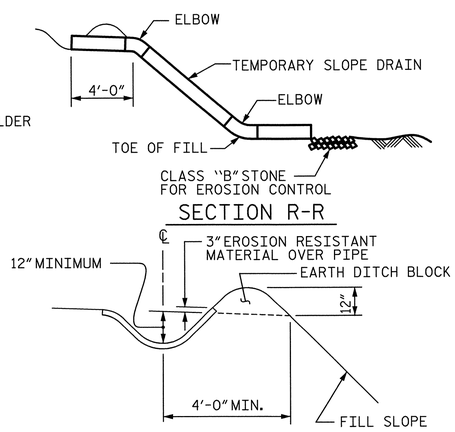

SECTION R-R

SECTION S-S

TEMPORARY BERM AND SLOPE DRAIN DETAILS

(TO BE USED WHEN SHOULDER BERM GUTTER IS REQUIRED)

PROJECT NO. U-2524C

GUILFORD COUNTY

STATION: 9+75.28 -RPDY4-

SHEET 2 OF 3

STATE OF NORTH CAROLINA
DEPARTMENT OF TRANSPORTATION
RALEIGH

BRIDGE APPROACH SLAB PLAN

-RAMP D-

REVISIONS								SHEET NO.
NO.	BY:	DATE:	NO.	BY:	DATE:			S-835
1			3					TOTAL SHEETS
2			4					836

PLANS PREPARED BY:

SIMPSON ENGINEERS & ASSOCIATES
5640 Dillard Drive
Suite 200
Cary, NC 27518
(919) 852-0468
(919) 852-0598 (Fax)
www.simpsonengr.com
LICENSURE NO. C-2521

NORTH CAROLINA PROFESSIONAL SEAL 023906 ENGINEER MARK A. AVERETTE
6-5-2013

DRAWN BY: T. BANKOVICH DATE: 4-13
CHECKED BY: M. AVERETTE DATE: 4-13
DESIGN ENGINEER OF RECORD: M. AVERETTE DATE: 4-13

6/5/2013 2:40:51 PM G:\Projects\2011\U-2524 (Guilford Co)\Structures\Ramp D\Drawings\Final\U-2524_sd_rpd_as.dgn

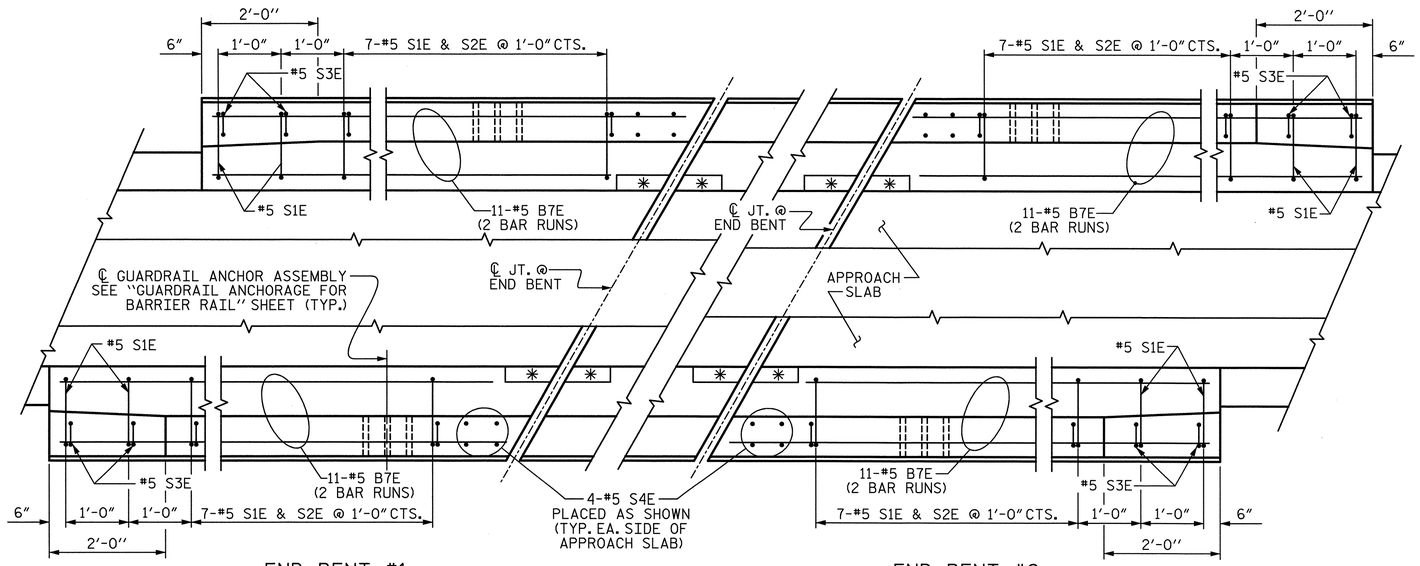

END BENT #1

END BENT #2

PLAN OF BARRIER RAIL

✱ FOR RECESS DETAILS, SEE "EXPANSION JOINT SEAL DETAILS", SHEET 2 OF 3

NOTES

THE COST OF THE BARRIER RAIL ON THE APPROACH SLAB SHALL BE INCLUDED IN THE LINEAR FOOT CONTRACT PRICE BID FOR "CONCRETE BARRIER RAIL".

THE BARRIER RAIL ON EACH APPROACH SLAB SHALL NOT BE CAST UNTIL ALL APPROACH SLAB CONCRETE HAS BEEN CAST AND HAS REACHED A MINIMUM COMPRESSIVE STRENGTH OF 3,000 PSI.

ALL REINFORCING STEEL IN BARRIER RAILS SHALL BE EPOXY COATED.

BAR TYPES

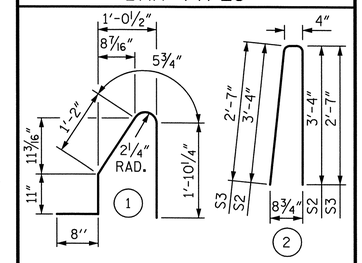

ALL BAR DIMENSIONS ARE OUT TO OUT

BILL OF MATERIAL

BARRIER RAIL ONLY

BAR	NO.	SIZE	TYPE	LENGTH	WEIGHT
B7	88	5	STR	7'-0"	642
S1E	36	5	1	5'-1"	191
S2E	28	5	2	7'-0"	204
S3E	8	5	2	5'-6"	46
S4E	16	5	STR	4'-3"	71
EPOXY COATED REINFORCING STEEL					1154 LB
CLASS "AA" CONCRETE					5.8 CY
CONCRETE BARRIER RAIL					42.4 LF

"E" INDICATES EPOXY COATED REINFORCING STEEL

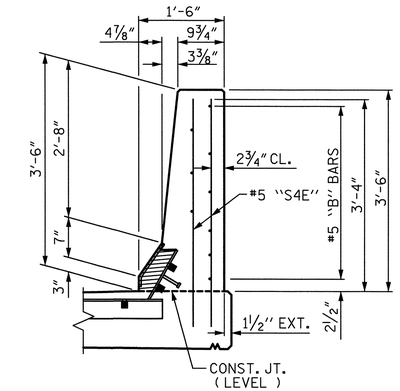

END VIEW AT EXP. JOINTS

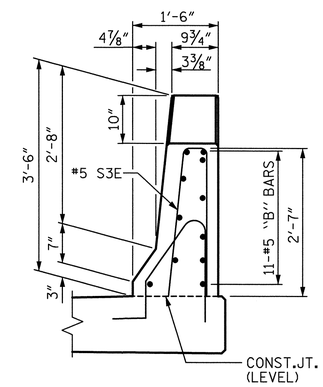

END VIEW

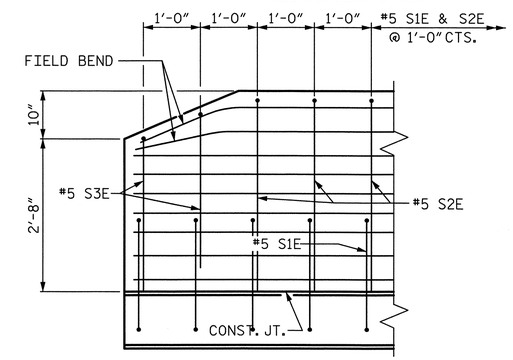

SIDE VIEW

END OF RAIL DETAILS

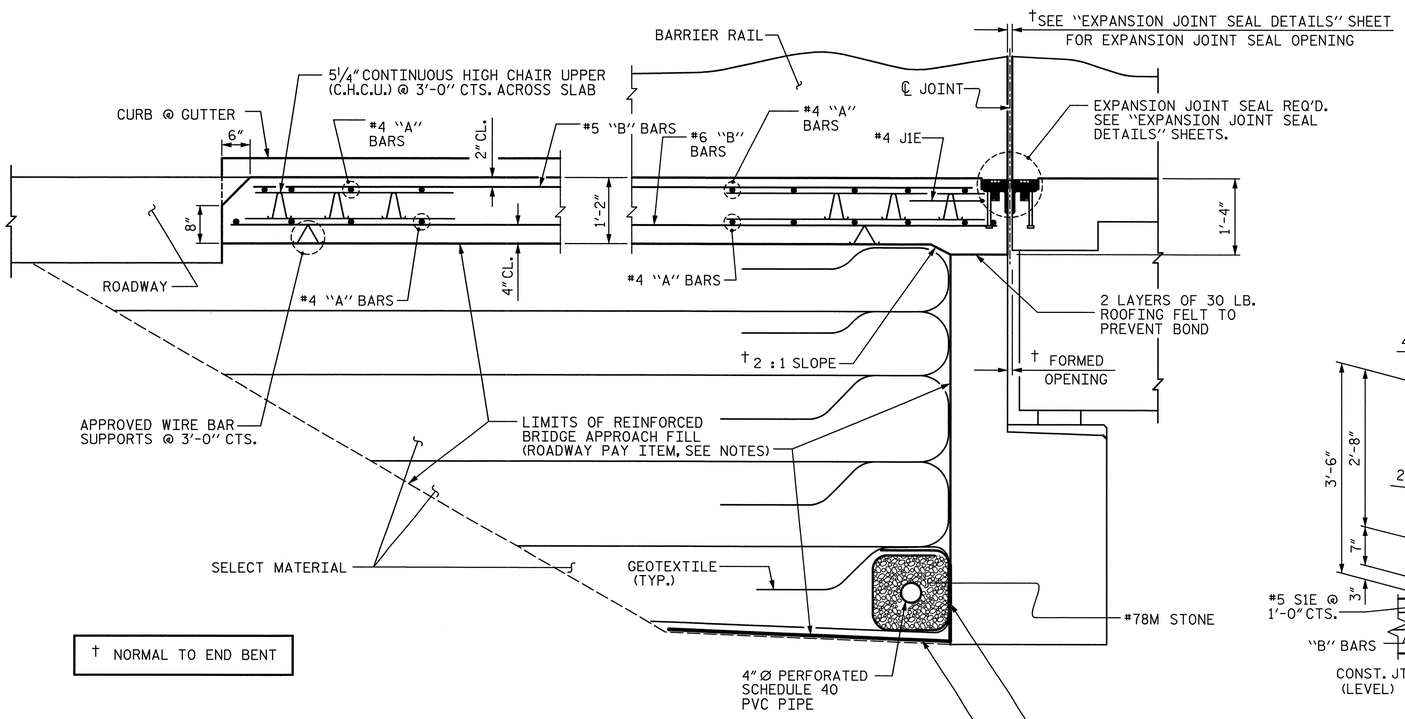

† NORMAL TO END BENT

SECTION THRU SLAB

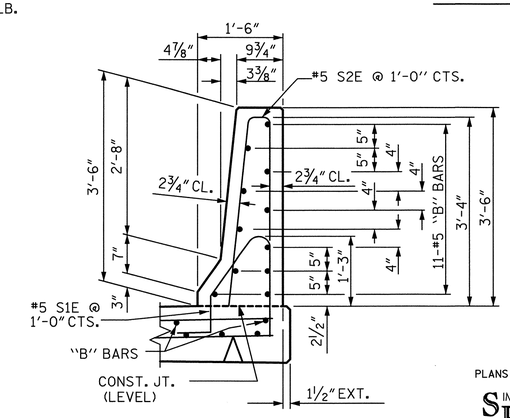

SECTION THRU RAIL

PROJECT NO. U-2524C

GUILFORD COUNTY

STATION: 9+75.28 -RPDY4-

SHEET 3 OF 3

STATE OF NORTH CAROLINA
DEPARTMENT OF TRANSPORTATION
RALEIGH

BRIDGE APPROACH SLAB DETAILS

-RAMP D-

PLANS PREPARED BY:

SIMPSON ENGINEERS & ASSOCIATES
5640 Dillard Drive
Suite 200
Cary, NC 27518
(919) 852-0468
(919) 852-0598 (Fax)
www.simpsonengr.com
LICENSURE NO. C-2521

NORTH CAROLINA PROFESSIONAL SEAL 023908 ENGINEER MARK A. AVERETTE
6-5-2013

REVISIONS							
NO.	BY:	DATE:	NO.	BY:	DATE:	SHEET NO.	S-836
1			3			TOTAL SHEETS	836
2			4				

DRAWN BY: T. BANKOVICH DATE: 4-13
CHECKED BY: M. AVERETTE DATE: 4-13
DESIGN ENGINEER OF RECORD: M. AVERETTE DATE: 4-13

6/5/2013 2:40:55 PM G:\Projects\2011\U-2524 (Guilford Co)\Structures\Ramp D\Drawings\Final\U-2524_sd_rpd_as.dgn

F.A. PROJECT: NHF-0708(62)

BM #7: RAIL ROAD SPIKE SET IN 26" OAK TREE 75.5' RT. OF -L- STA. 314+43.53, EL. 812.34

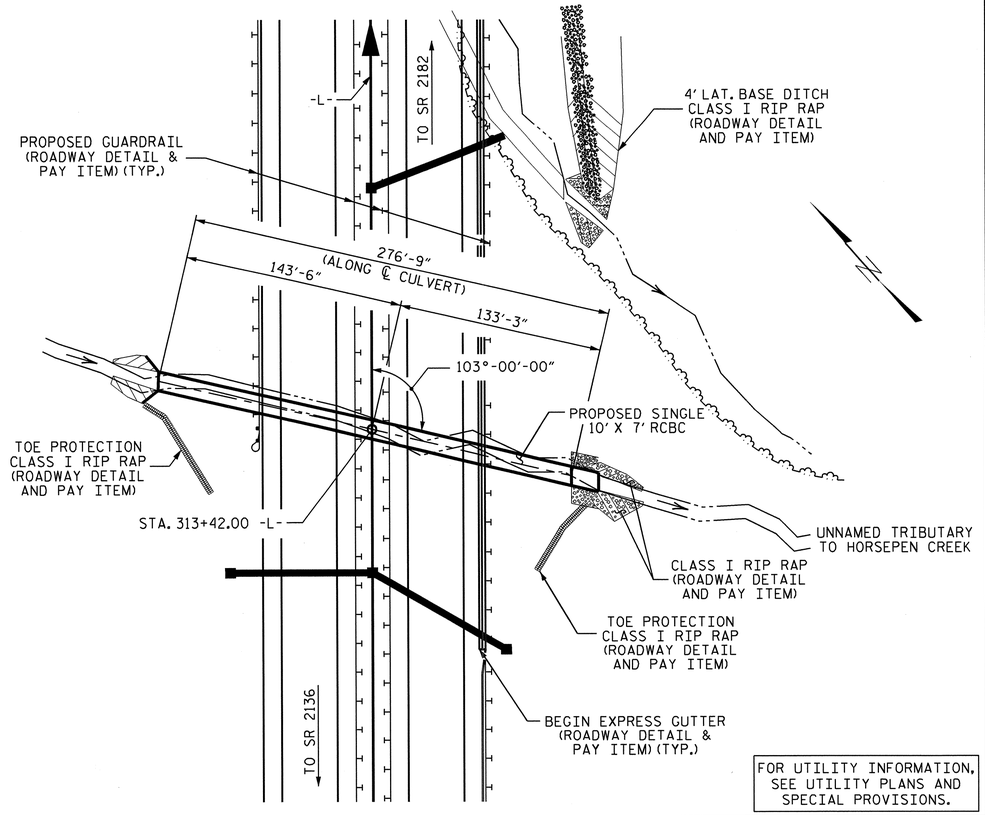

FOR UTILITY INFORMATION, SEE UTILITY PLANS AND SPECIAL PROVISIONS.

LOCATION SKETCH

NOTES

ASSUMED LIVE LOAD ----------HL-93 OR ALTERNATE LOADING.

DESIGN FILL---------- 27.29'

FOR OTHER DESIGN DATA AND NOTES, SEE STANDARD NOTE SHEET.

3"Ø WEEP HOLES INDICATED TO BE IN ACCORDANCE WITH THE SPECIFICATIONS.

CONCRETE IN CULVERTS TO BE POURED IN THE FOLLOWING ORDER:

1. WING FOOTINGS AND FLOOR SLAB INCLUDING 4" OF ALL VERTICAL WALLS.
2. THE REMAINING PORTIONS OF THE WALLS AND WINGS FULL HEIGHT FOLLOWED BY ROOF SLAB AND HEADWALLS.

THE RESIDENT ENGINEER SHALL CHECK THE LENGTH OF CULVERT BEFORE STAKING IT OUT TO MAKE CERTAIN THAT IT WILL PROPERLY TAKE CARE OF THE FILL.

DIMENSIONS FOR WING LAYOUT AS WELL AS ADDITIONAL REINFORCING STEEL EMBEDDED IN BARREL ARE SHOWN ON WING SHEET.

TRANSVERSE CONSTRUCTION JOINTS SHALL BE USED IN THE BARREL, SPACED TO LIMIT THE POURS TO A MAXIMUM OF 70 FT. LOCATION OF JOINTS SHALL BE SUBJECT TO APPROVAL OF THE ENGINEER.

AT THE CONTRACTOR'S OPTION, HE MAY SPLICE THE VERTICAL REINFORCING STEEL IN THE INTERIOR FACE OF EXTERIOR WALL ABOVE LOWER WALL CONSTRUCTION JOINT. THE SPLICE LENGTH SHALL BE AS PROVIDED IN THE SPLICE LENGTH CHART SHOWN ON THE PLANS. EXTRA WEIGHT OF STEEL DUE TO THE SPLICES SHALL BE PAID FOR BY THE CONTRACTOR.

AT THE CONTRACTOR'S OPTION THE VERTICAL CONSTRUCTION JOINT BETWEEN THE OUTLET WINGS AND THE BARREL MAY BE ELIMINATED AND THE "C" BARS IN THE BARREL MAY BE EXTENDED TO REPLACE THE "D" AND "H" BARS IN THE WINGS AND SLAB.

THE CONTRACTOR SHALL PROVIDE INDEPENDENT ASSURANCE SAMPLES OF REINFORCING STEEL AS FOLLOWS: FOR PROJECTS REQUIRING UP TO 400 TONS OF REINFORCING STEEL, ONE 30 INCH SAMPLE OF EACH SIZE BAR USED, AND FOR PROJECTS REQUIRING OVER 400 TONS OF REINFORCING STEEL, TWO 30 INCH SAMPLES OF EACH SIZE BAR USED. THE BARS FROM WHICH THE SAMPLES ARE TAKEN MUST THEN BE SPLICED WITH REPLACEMENT BARS OF THE SIZE AND LENGTH OF THE SAMPLE, PLUS A MINIMUM LAP SPLICE OF THIRTY BAR DIAMETERS. PAYMENT FOR THE SAMPLES OF REINFORCING STEEL SHALL BE CONSIDERED INCIDENTAL TO VARIOUS PAY ITEMS.

A 3 FOOT STRIP OF FILTER FABRIC SHALL BE ATTACHED TO THE FILL FACE OF THE INLET WING COVERING THE ENTIRE LENGTH OF THE EXPANSION JOINTS.

FOR SUBMITTAL OF WORKING DRAWINGS, SEE SPECIAL PROVISIONS.

FOR CRANE SAFETY, SEE SPECIAL PROVISIONS.

FOR FALSEWORK AND FORMWORK, SEE SPECIAL PROVISIONS.

FOR CULVERT DIVERSION DETAILS AND PAY ITEM, SEE EROSION CONTROL PLANS.

FOR GROUT FOR STRUCTURES, SEE SPECIAL PROVISIONS.

NO PRECAST REINFORCED BOX CULVERT OPTION WILL BE ALLOWED.

TOTAL STRUCTURE QUANTITIES

CLASS A CONCRETE			
BARREL @ 1.594 CY/FT	441.1	C.Y.	
INLET WINGS ETC.	16.1	C.Y.	
OUTLET WINGS & APRON ETC.	15.3	C.Y.	
SILLS	3.4	C.Y.	
TOTAL	475.9	C.Y.	
REINFORCING STEEL			
BARREL/APRON	48,141	LBS.	
INLET WINGS ETC.	996	LBS.	
OUTLET WINGS ETC.	575	LBS.	
TOTAL	49,712	LBS.	
FOUNDATION CONDITIONING MATERIAL	321	TONS	
CULVERT EXCAVATION	LUMP SUM		

HYDRAULIC DATA

DESIGN DISCHARGE	= 440 CFS
FREQUENCY OF DESIGN FLOOD	= 50 YRS.
DESIGN HIGH WATER ELEVATION	= 806.20
DRAINAGE AREA	= 0.16 SQ. MI.
BASE DISCHARGE (Q100)	= 490 CFS
BASE HIGH WATER ELEVATION	= 806.60

OVERTOPPING FLOOD DATA

OVERTOPPING DISCHARGE	= > 500 YRS. (+) EVENT
FREQUENCY OF OVERTOPPING FLOOD	= > 500 YRS. (+)
OVERTOPPING FLOOD ELEVATION	= 826.10

GRADE DATA

GRADE POINT ELEVATION @ STA. 313+42.00 -L-	= 830.66'
BED ELEVATION @ STA. 313+42.00 -L-	= 796.90'
ROADWAY FILL SLOPES	= 3:1 LEFT 2:1 RIGHT

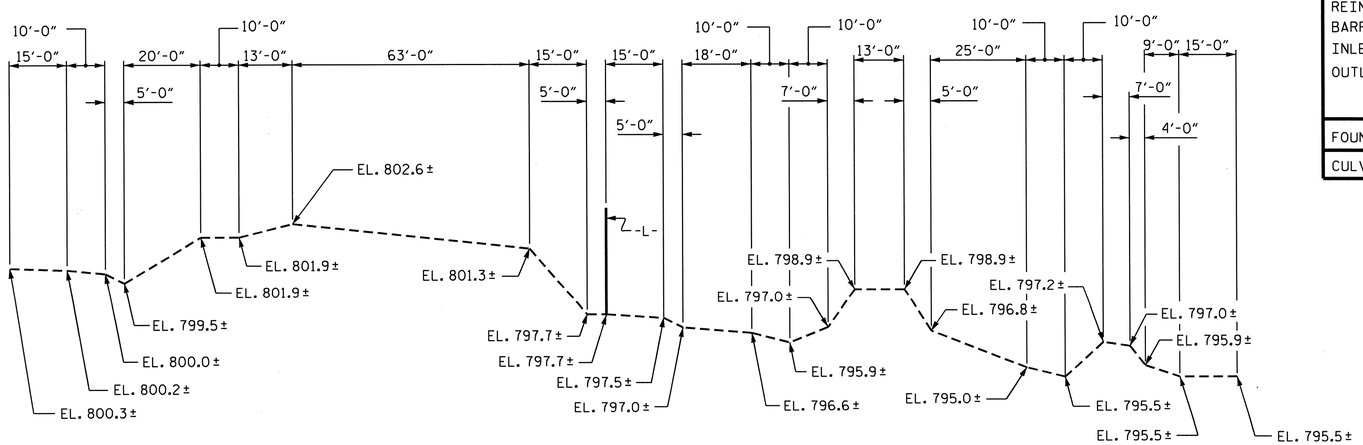

PROFILE ALONG ℄ CULVERT

PROJECT NO. U-2524C
GUILFORD COUNTY
STATION: 313+42.00 -L-

SHEET 1 OF 8

STATE OF NORTH CAROLINA
DEPARTMENT OF TRANSPORTATION
RALEIGH

SINGLE 10 FT. X 7 FT. CONCRETE BOX CULVERT 103° SKEW

REVISIONS						SHEET NO.
NO.	BY:	DATE:	NO.	BY:	DATE:	C-1
1			3			TOTAL SHEETS
2			4			16

DRAWN BY : A. SORSENGINH DATE : 2/2013
CHECKED BY : W. ARAFAT DATE : 3/2013
DESIGN ENGINEER OF RECORD: A. SORSENGINH DATE : 3/2013

NORTH CAROLINA PROFESSIONAL SEAL 022506 ENGINEER JESSE MCARTHUR BAILEY 6/25/13

NORTH CAROLINA PROFESSIONAL SEAL 14855 ENGINEER DOUGLAS R. CALHOUN 6-25-13

STD. NO. CB221A

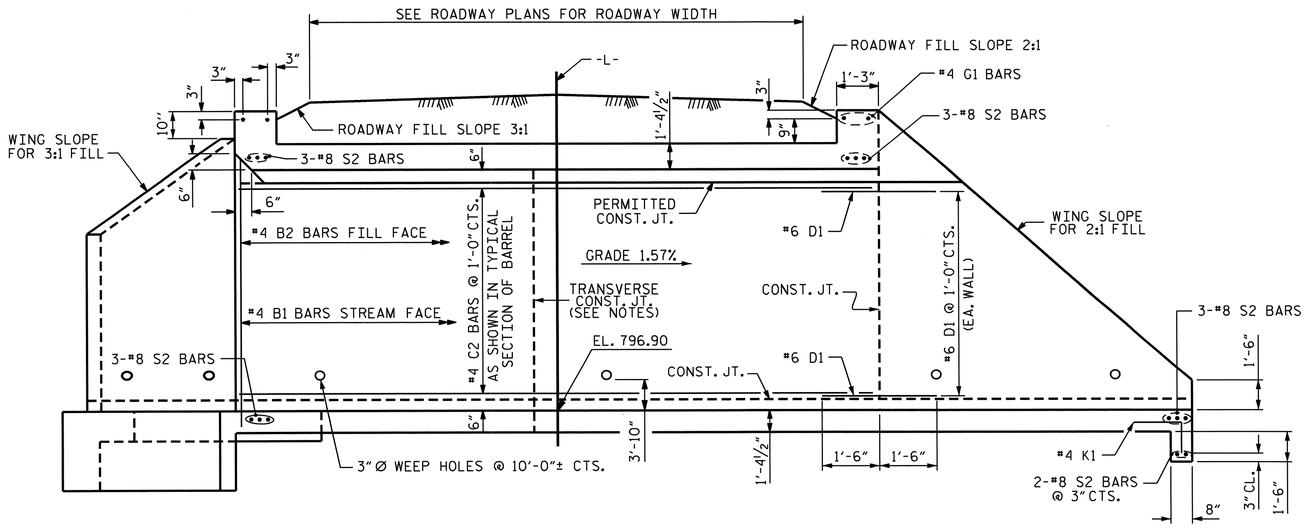

CULVERT SECTION NORMAL TO ROADWAY

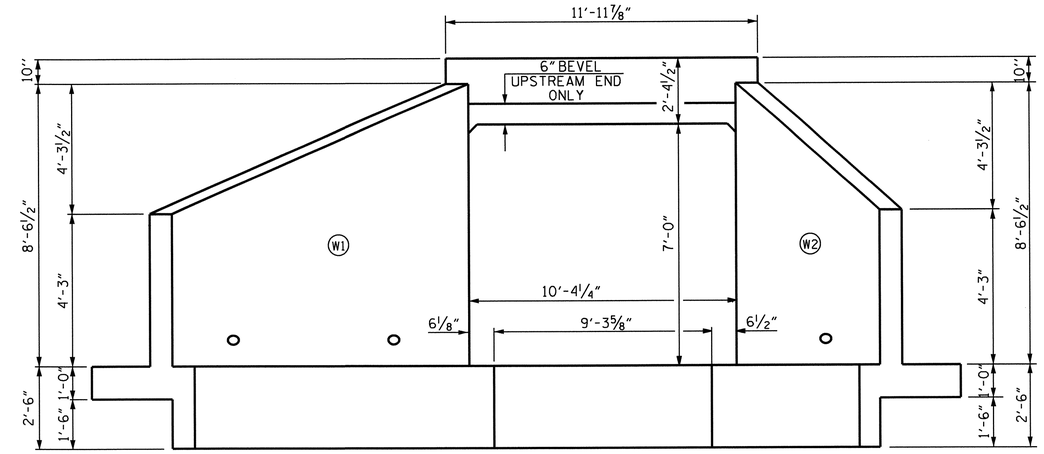

INLET END ELEVATION NORMAL TO SKEW

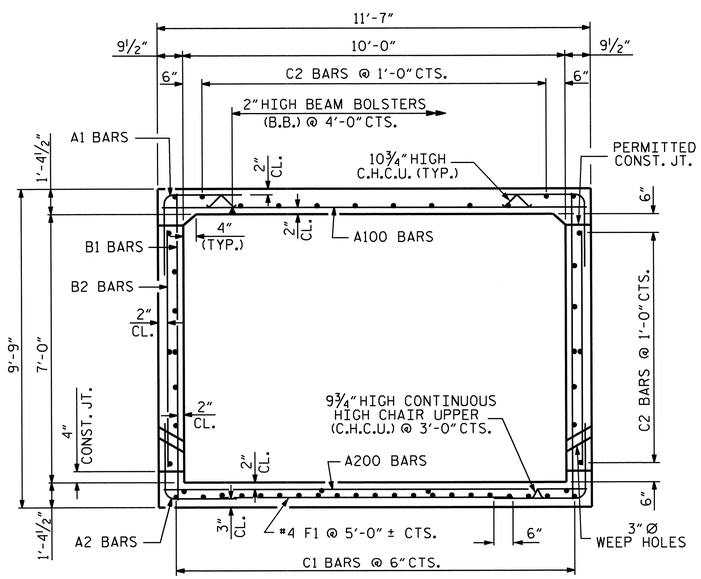

RIGHT ANGLE SECTION OF BARREL

THERE ARE 53 "C" BARS IN SECTION OF BARREL

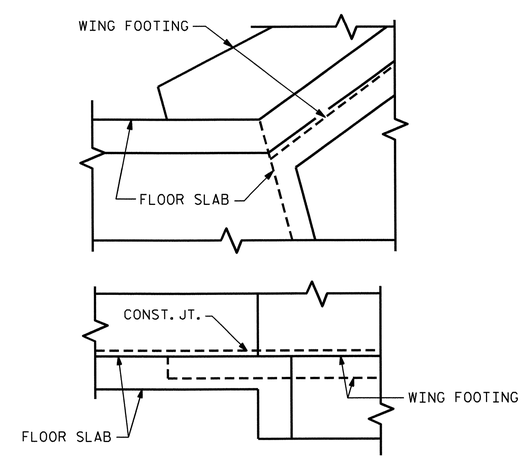

DETAIL

CONNECTION OF WING FOOTING AND FLOOR SLAB WHEN SLAB IS THICKER THAN FOOTING

PROJECT NO. U-2524C
GUILFORD COUNTY
STATION: 313+42.00 -L-

SHEET 2 OF 8

STATE OF NORTH CAROLINA
DEPARTMENT OF TRANSPORTATION
RALEIGH

SINGLE 10 FT. X 7 FT. CONCRETE BOX CULVERT 103° SKEW

NORTH CAROLINA PROFESSIONAL SEAL 14855 ENGINEER DOUGLAS R. CALHOUN
6-25-13

REVISIONS						SHEET NO.
NO.	BY:	DATE:	NO.	BY:	DATE:	C-2
1			3			TOTAL SHEETS
2			4			16

ASSEMBLED BY : A. SORSENGINH DATE : 2/2013		SPECIAL
CHECKED BY : W. ARAFAT DATE : 3/2013		
DRAWN BY : R.W. WRIGHT DATE : AUG. 1989		STANDARD
CHECKED BY : A.R. BISSETTE DATE : AUG. 1989		

REVISED 8-28-92 BY E.L.R. CHECKED BY C.R.P.
REVISED 8-22-88 BY A.R.B. CHECKED BY C.R.K.
REDRAWN 8-22-89
REVISED 11-19-99 BY M.M. CHECKED BY R.W.W.

STD. NO. CB221

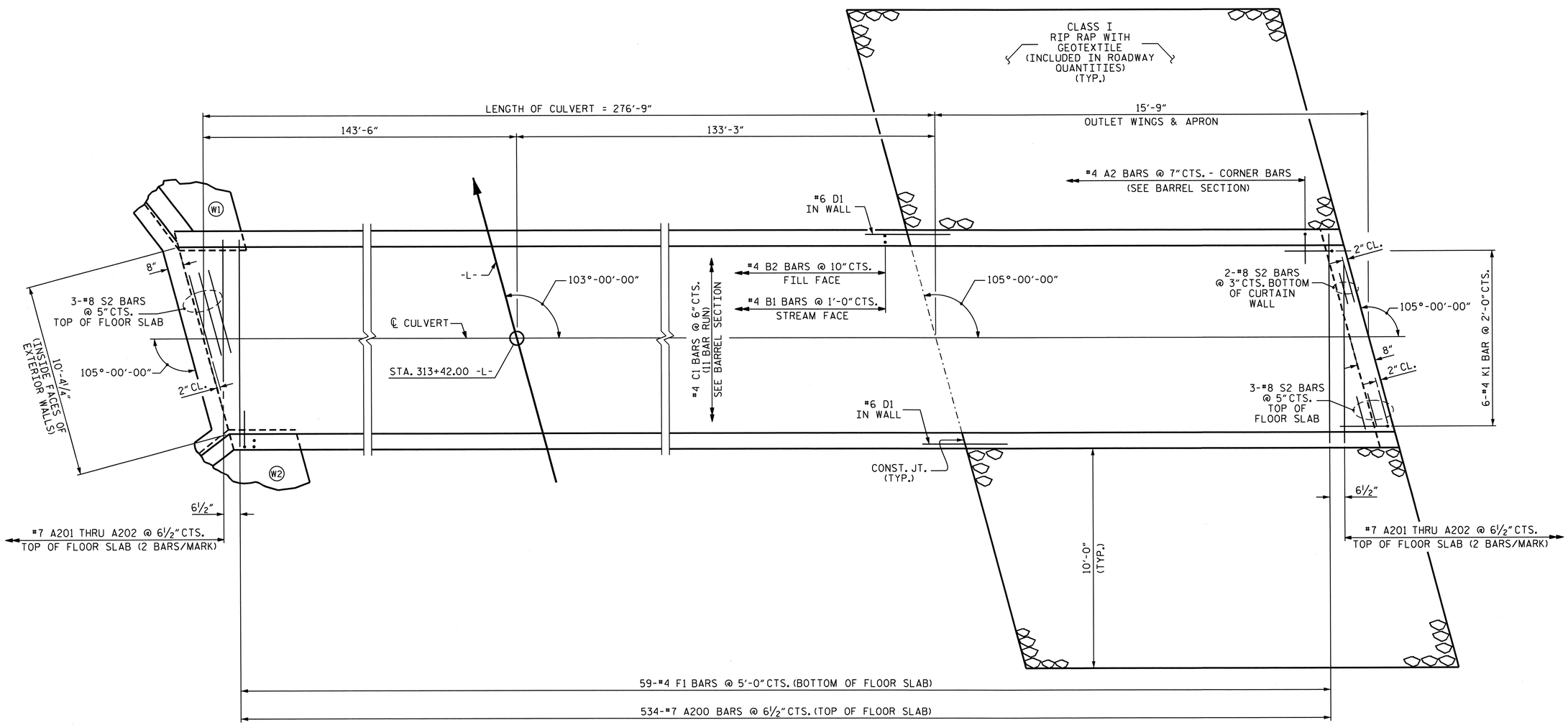

PLAN OF FLOOR SLAB

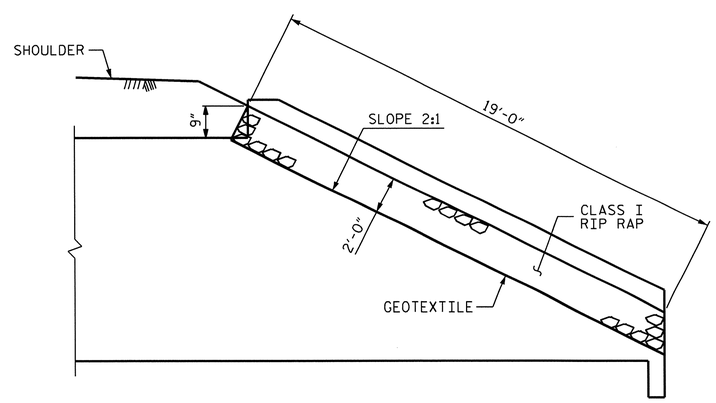

ELEVATION VIEW - OUTLET WING RIP RAP

PROJECT NO. U-2524C
GUILFORD COUNTY
STATION: 313+42.00 -L-

SHEET 3 OF 8

STATE OF NORTH CAROLINA
DEPARTMENT OF TRANSPORTATION
RALEIGH

SINGLE 10 FT. X 7 FT. CONCRETE BOX CULVERT 103° SKEW

NORTH CAROLINA PROFESSIONAL SEAL 14855 ENGINEER DOUGLAS R. CALHOUN
6/25/13

REVISIONS						SHEET NO.
NO.	BY:	DATE:	NO.	BY:	DATE:	C-3
1			3			TOTAL SHEETS
2			4			16

ASSEMBLED BY : A. SORSENGINH DATE : 2/2013
CHECKED BY : W. ARAFAT DATE : 3/2013

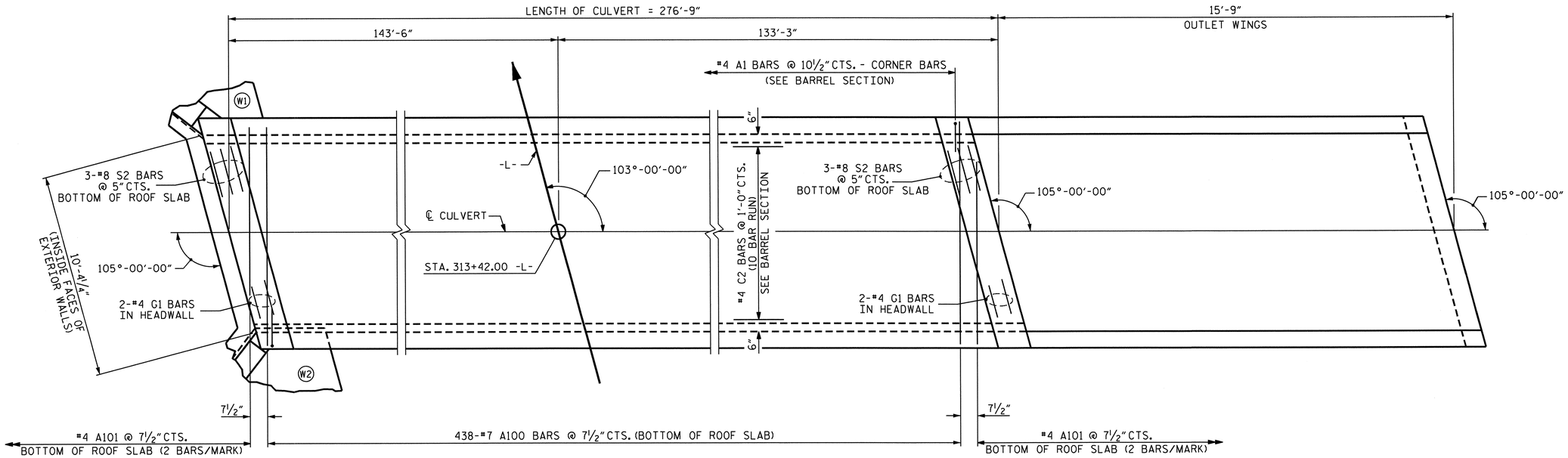

PLAN OF ROOF SLAB

PROJECT NO. U-2524C
GUILFORD COUNTY
STATION: 313+42.00 -L-

SHEET 4 OF 8

STATE OF NORTH CAROLINA
DEPARTMENT OF TRANSPORTATION
RALEIGH

SINGLE 10 FT. X 7 FT. CONCRETE BOX CULVERT 103° SKEW

NORTH CAROLINA PROFESSIONAL SEAL 14855 ENGINEER DOUGLAS R. CALHOUN
6-25-13

REVISIONS						SHEET NO.
NO.	BY:	DATE:	NO.	BY:	DATE:	C-4
1			3			TOTAL SHEETS
2			4			16

ASSEMBLED BY : A. SORSENGINH DATE : 2/2013
CHECKED BY : W. ARAFAT DATE : 3/2013

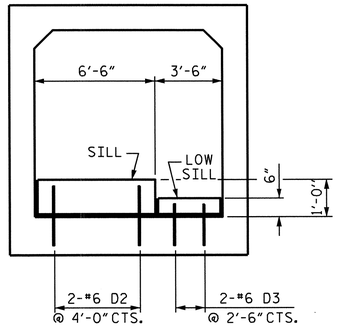

ELEVATION

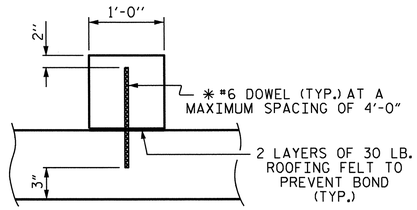

SECTION THROUGH SILL

* DOWELS MAY BE PUSHED INTO GREEN CONCRETE AFTER SLAB HAS BEEN FLOAT FINISHED.

CULVERT SILL DETAILS

BAR TYPE

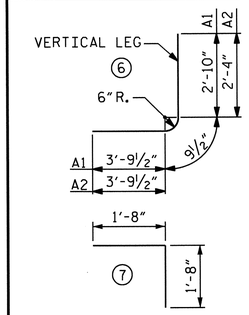

BAR DIMENSIONS ARE OUT TO OUT

SPLICE LENGTH CHART

BAR	SIZE	LENGTH
C1, C2	#4	1'-11"

BAR SCHEDULE

BAR	NO.	SIZE	TYPE	LENGTH	WEIGHT
A100	438	#7	STR	11'-2"	9997
A101	4	#7	STR	6'-1"	50
A200	534	#7	STR	11'-2"	12188
A201	4	#7	STR	7'-11"	65
A202	4	#7	STR	3'-11"	32
A1	634	#4	6	7'-5"	3141
A2	1002	#4	6	6'-11"	4630
B1	554	#4	STR	9'-3"	3423
B2	666	#4	STR	6'-4"	2818
C1	275	#4	STR	28'-4"	5205
C2	280	#4	STR	29'-5"	5502
D1	14	#6	STR	3'-0"	63
D2	22	#6	STR	1'-11"	63
D3	22	#6	STR	1'-5"	47
F1	59	#4	STR	11'-2"	440
G1	4	#4	STR	11'-7"	31
K1	6	#4	7	3'-4"	13
S2	14	#8	STR	11'-7"	433
REINFORCING STEEL = 48,141 LBS					

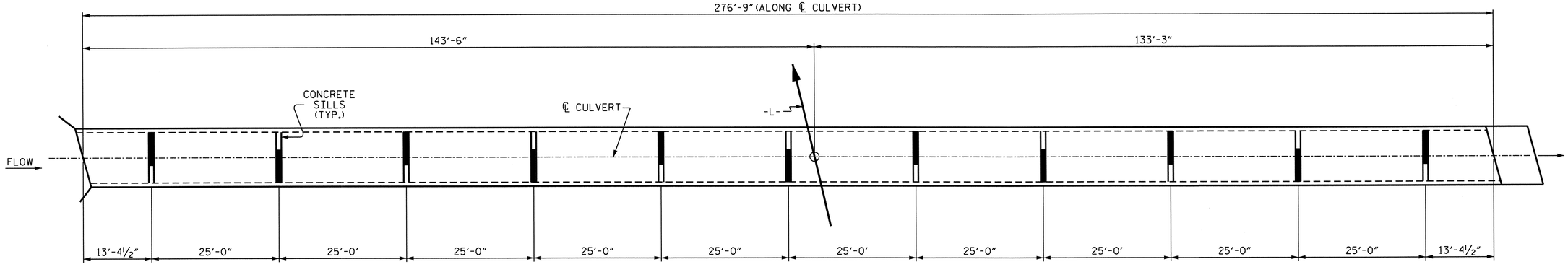

PLAN OF SILLS LOCATION

SILL

LOW SILL

PROJECT NO. U-2524C

GUILFORD COUNTY

STATION: 313+42.00 -L-

SHEET 5 OF 8

STATE OF NORTH CAROLINA
DEPARTMENT OF TRANSPORTATION
RALEIGH

SINGLE 10 FT. X 7 FT. CONCRETE BOX CULVERT 103° SKEW

NORTH CAROLINA PROFESSIONAL SEAL 14855 ENGINEER DOUGLAS R. CALHOUN
6-25-13

REVISIONS						SHEET NO.
NO.	BY:	DATE:	NO.	BY:	DATE:	C-5
1			3			TOTAL SHEETS
2			4			16

ASSEMBLED BY : A. SORSENGINH DATE : 2/2013
CHECKED BY : W. ARAFAT DATE : 3/2013

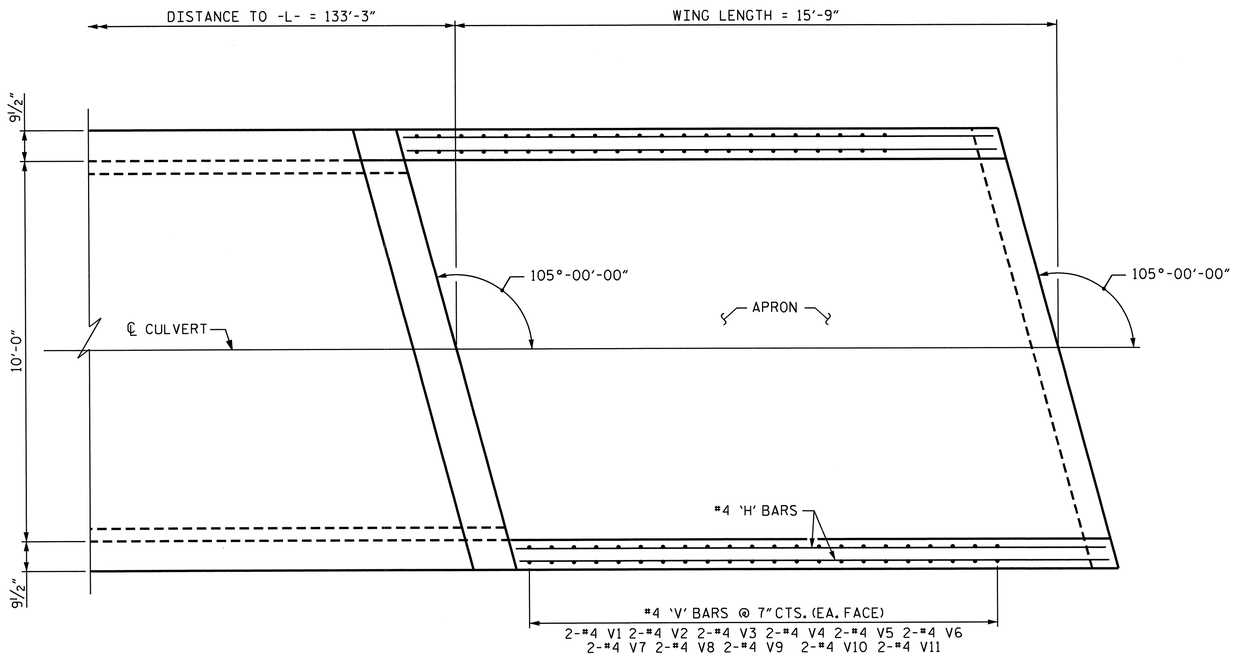

PLAN

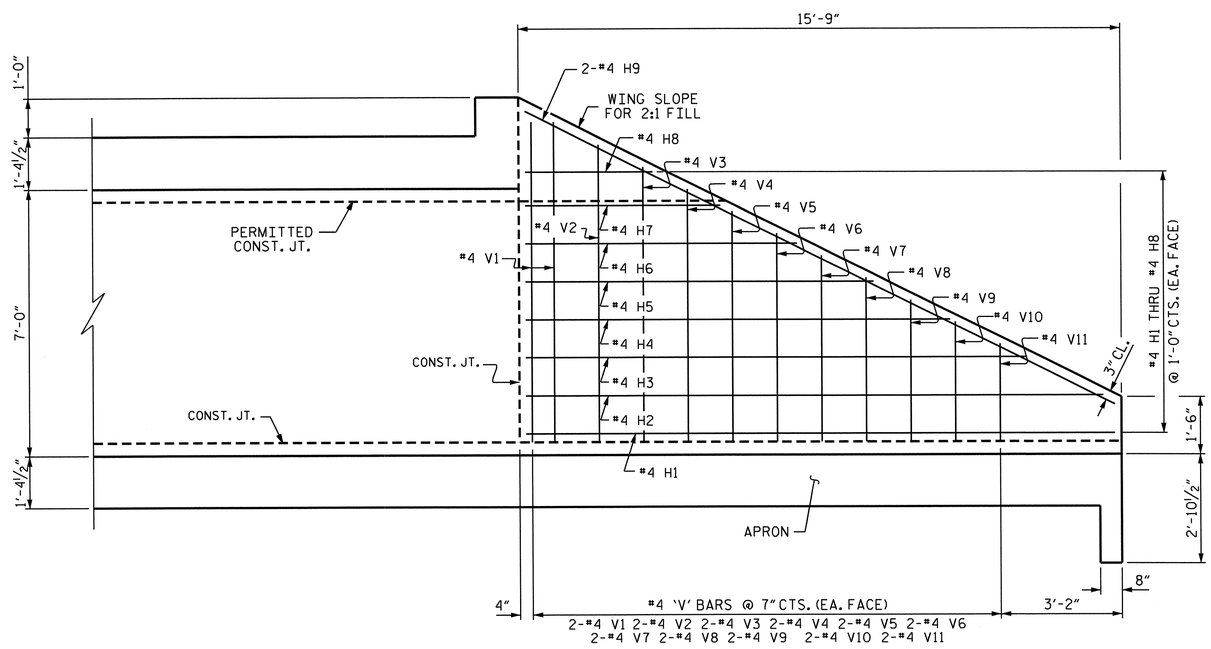

ELEVATION

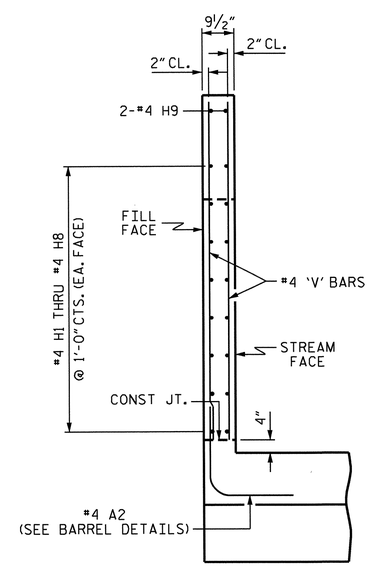

TYPICAL WING SECTION

BILL OF MATERIAL

BAR	NO.	SIZE	TYPE	LENGTH	WEIGHT
H1	4	#4	STR	15'-5"	41
H2	4	#4	STR	15'-1"	40
H3	4	#4	STR	13'-1"	35
H4	4	#4	STR	11'-1"	30
H5	4	#4	STR	9'-1"	24
H6	4	#4	STR	7'-1"	19
H7	4	#4	STR	5'-1"	14
H8	4	#4	STR	3'-1"	8
H9	4	#4	STR	17'-2"	46
V1	8	#4	STR	8'-4"	45
V2	8	#4	STR	7'-9"	41
V3	8	#4	STR	7'-2"	38
V4	8	#4	STR	6'-7"	35
V5	8	#4	STR	6'-0"	32
V6	8	#4	STR	5'-5"	29
V7	8	#4	STR	4'-10"	26
V8	8	#4	STR	4'-3"	23
V9	8	#4	STR	3'-8"	20
V10	8	#4	STR	3'-1"	16
V11	8	#4	STR	2'-6"	13

REINFORCING STEEL = 575 LBS

CLASS A CONCRETE

2 OUTLET WINGS	5.0	CY
1 HEADWALL	0.6	CY
1 END CURTAIN WALL AND OUTLET WING APRON	9.7	CY
TOTAL	15.3	CY

PROJECT NO. U-2524C
GUILFORD COUNTY
STATION: 313+42.00 -L-

SHEET 6 OF 8

STATE OF NORTH CAROLINA
DEPARTMENT OF TRANSPORTATION
RALEIGH

OUTLET WINGS FOR CONCRETE BOX CULVERT

H = 7'-0" SLOPE = 2:1
105° SKEW

NORTH CAROLINA PROFESSIONAL SEAL 14855 ENGINEER DOUGLAS R. CALHOUN
6-25-13

REVISIONS						SHEET NO.
NO.	BY:	DATE:	NO.	BY:	DATE:	C-6
1			3			TOTAL SHEETS
2			4			16

ASSEMBLED BY : A. SORSENGINH DATE : 2/2013
CHECKED BY : W. ARAFAT DATE : 3/2013

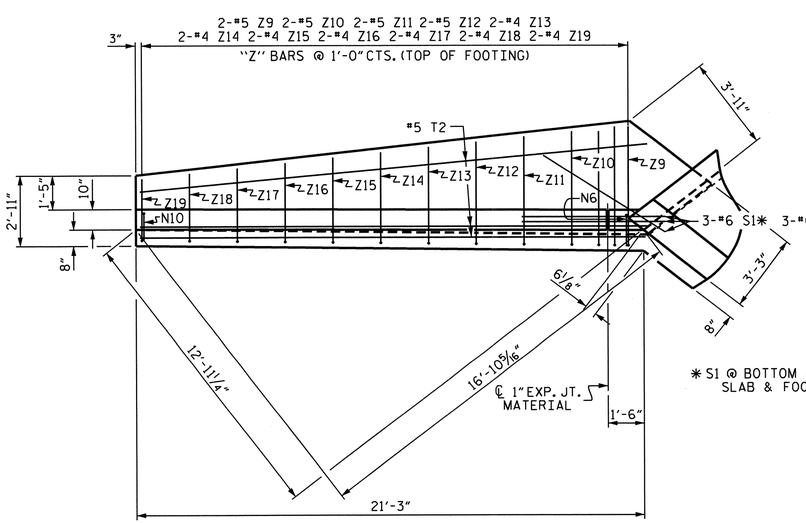

PLAN W1

✱ S1 @ BOTTOM OF FLOOR SLAB & FOOTING

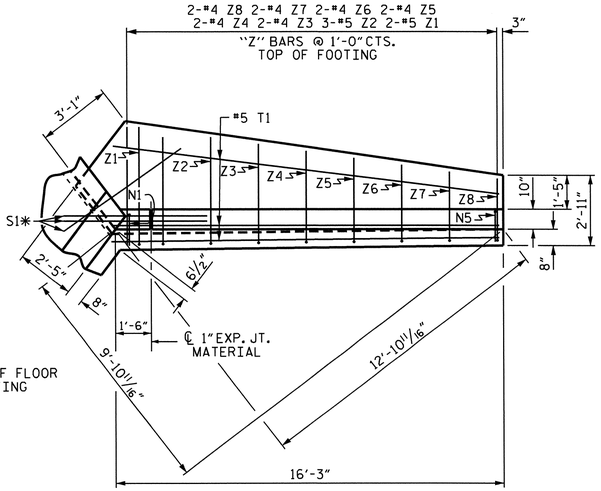

PLAN W2

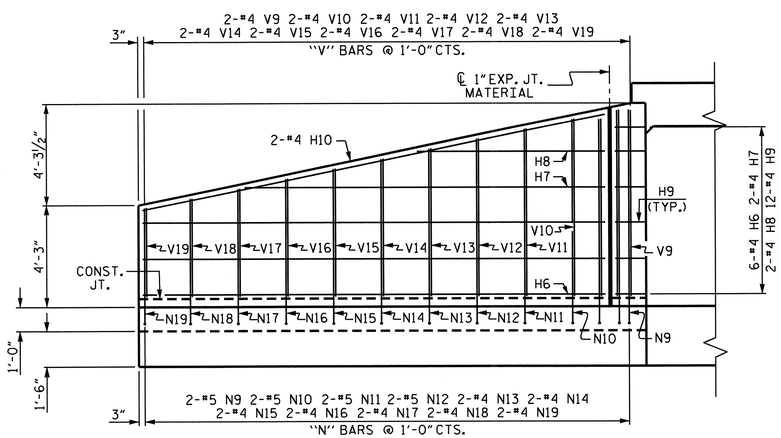

ELEVATION W1

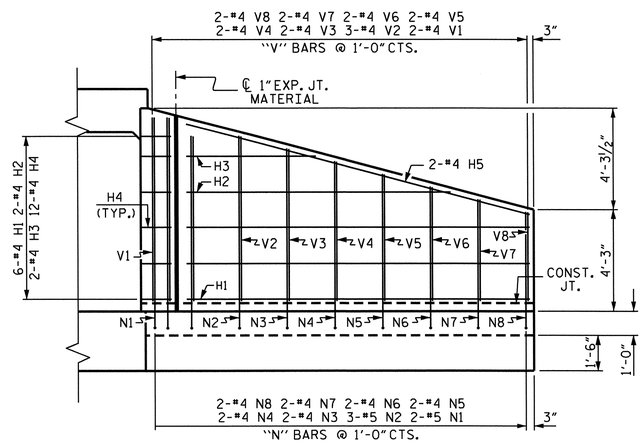

ELEVATION W2

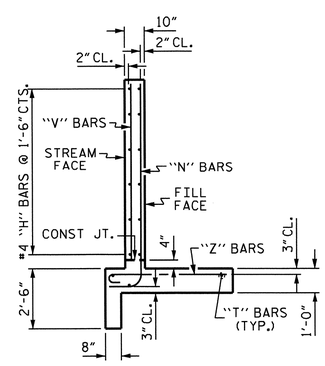

TYPICAL WING SECTION

BAR TYPES

ALL BAR DIMENSIONS ARE OUT TO OUT.

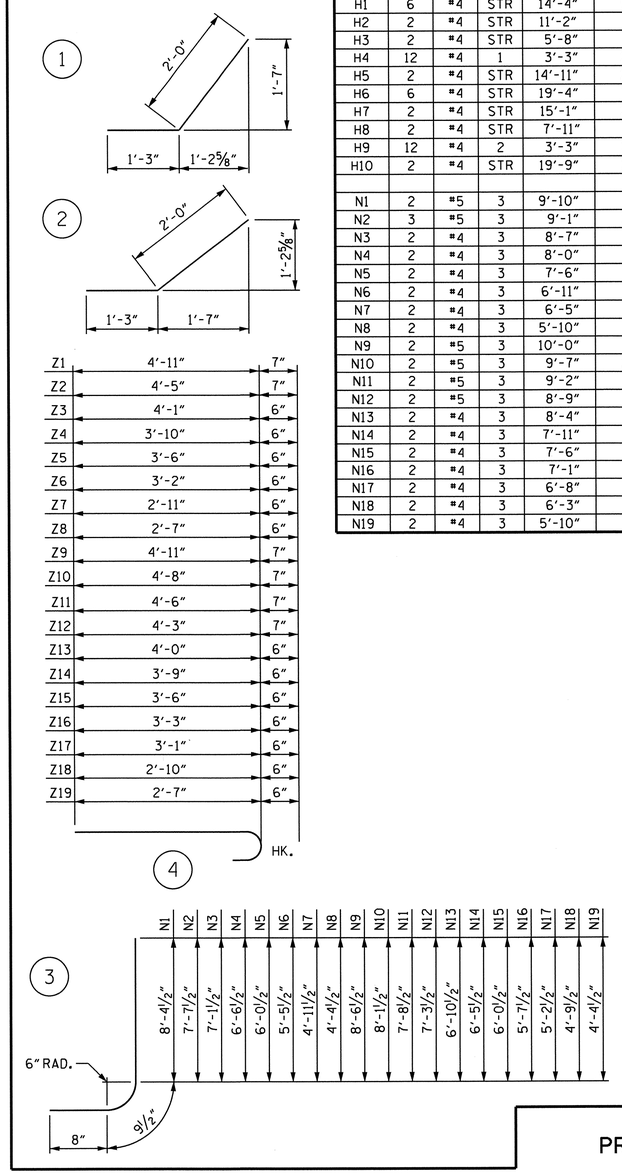

BILL OF MATERIAL

BAR	NO.	SIZE	TYPE	LENGTH	WEIGHT
H1	6	#4	STR	14'-4"	57
H2	2	#4	STR	11'-2"	15
H3	2	#4	STR	5'-8"	8
H4	12	#4	1	3'-3"	26
H5	2	#4	STR	14'-11"	20
H6	6	#4	STR	19'-4"	77
H7	2	#4	STR	15'-1"	20
H8	2	#4	STR	7'-11"	11
H9	12	#4	2	3'-3"	26
H10	2	#4	STR	19'-9"	26
N1	2	#5	3	9'-10"	21
N2	3	#5	3	9'-1"	28
N3	2	#4	3	8'-7"	11
N4	2	#4	3	8'-0"	11
N5	2	#4	3	7'-6"	10
N6	2	#4	3	6'-11"	9
N7	2	#4	3	6'-5"	9
N8	2	#4	3	5'-10"	8
N9	2	#5	3	10'-0"	21
N10	2	#5	3	9'-7"	20
N11	2	#5	3	9'-2"	19
N12	2	#5	3	8'-9"	18
N13	2	#4	3	8'-4"	11
N14	2	#4	3	7'-11"	11
N15	2	#4	3	7'-6"	10
N16	2	#4	3	7'-1"	9
N17	2	#4	3	6'-8"	9
N18	2	#4	3	6'-3"	8
N19	2	#4	3	5'-10"	8

BAR	NO.	SIZE	TYPE	LENGTH	WEIGHT
S1	6	#6	STR	6'-0"	54
T1	3	#5	STR	16'-3"	51
T2	3	#5	STR	21'-3"	66
V1	2	#4	STR	7'-10"	10
V2	3	#4	STR	7'-1"	14
V3	2	#4	STR	6'-6"	9
V4	2	#4	STR	6'-0"	8
V5	2	#4	STR	5'-5"	7
V6	2	#4	STR	4'-11"	7
V7	2	#4	STR	4'-4"	6
V8	2	#4	STR	3'-10"	5
V9	2	#4	STR	7'-11"	11
V10	2	#4	STR	7'-6"	10
V11	2	#4	STR	7'-1"	9
V12	2	#4	STR	6'-8"	9
V13	2	#4	STR	6'-3"	8
V14	2	#4	STR	5'-10"	8
V15	2	#4	STR	5'-5"	7
V16	2	#4	STR	5'-0"	7
V17	2	#4	STR	4'-7"	6
V18	2	#4	STR	4'-2"	6
V19	2	#4	STR	3'-9"	5
Z1	2	#5	4	5'-6"	11
Z2	3	#5	4	5'-0"	16
Z3	2	#4	4	4'-7"	6
Z4	2	#4	4	4'-4"	6
Z5	2	#4	4	4'-0"	5
Z6	2	#4	4	3'-8"	5
Z7	2	#4	4	3'-5"	5
Z8	2	#4	4	3'-1"	4
Z9	2	#5	4	5'-6"	11
Z10	2	#5	4	5'-3"	11
Z11	2	#5	4	5'-1"	11
Z12	2	#5	4	4'-10"	10
Z13	2	#4	4	4'-6"	6
Z14	2	#4	4	4'-3"	6
Z15	2	#4	4	4'-0"	5
Z16	2	#4	4	3'-9"	5
Z17	2	#4	4	3'-7"	5
Z18	2	#4	4	3'-4"	4
Z19	2	#4	4	3'-1"	4

REINFORCING STEEL FOR 2 WINGS 996 LBS

CLASS A CONCRETE

2 WINGS	14.9	CY
1 HEADWALL	0.6	CY
1 END CURTAIN WALL	0.6	CY
TOTAL	16.1	CY

PROJECT NO. U-2524C

GUILFORD COUNTY

STATION: 313+42.00 -L-

SHEET 7 OF 8

STATE OF NORTH CAROLINA
DEPARTMENT OF TRANSPORTATION
RALEIGH

INLET WINGS FOR CONCRETE BOX CULVERT

H = 7'-0" SLOPE = 3:1
105° SKEW

NORTH CAROLINA PROFESSIONAL SEAL 14855 ENGINEER DOUGLAS R. CALLOWAY
6-25-13

REVISIONS						SHEET NO.
NO.	BY:	DATE:	NO.	BY:	DATE:	C-7
1			3			TOTAL SHEETS
2			4			16

ASSEMBLED BY :	A. SORSENGINH	DATE :	2/2013
CHECKED BY :	W. ARAFAT	DATE :	3/2013
DRAWN BY :	CCJ	01/00	
CHECKED BY :	RWW	03/00	

LOAD AND RESISTANCE FACTOR RATING (LRFR) SUMMARY FOR REINFORCED CONCRETE BOX CULVERT

LEVEL		VEHICLE	WEIGHT (W) (TONS)	CONTROLLING LOAD RATING (#)	MINIMUM RATING FACTORS (RF)	TONS = W x RF	STRENGTH I LIMIT STATE									
							LIVE-LOAD FACTORS (γ_{LL})	MOMENT				SHEAR				COMMENT NUMBER
								RATING FACTOR	BOX NO.	ELEMENT TYPE	DISTANCE FROM LEFT END OF ELEMENT (ft)	RATING FACTOR	BOX NO.	ELEMENT TYPE	DISTANCE FROM LEFT END OF ELEMENT (ft)	
DESIGN LOAD RATING		HL-93 (INVENTORY)	N/A	(1)	7.02	--	1.75	**7.02**	1	BOT CORNER WALL	**7.75**	7.72	1	EXT WALL	7.12	
		HL-93 (OPERATING)	N/A		9.09	--	1.35	9.09	1	BOT CORNER WALL	7.75	10.00	1	EXT WALL	7.12	
		HS-20 (INVENTORY)	36.00	(2)	7.02	252.56	1.75	**7.02**	1	BOT CORNER WALL	**7.75**	7.72	1	EXT WALL	7.12	
		HS-20 (OPERATING)	36.00		9.09	327.39	1.35	9.09	1	BOT CORNER WALL	7.75	10.00	1	EXT WALL	7.12	
LEGAL LOAD RATING	SINGLE VEHICLE (SV)	SNSH	13.50	(3)	8.77	118.39	1.40	**8.77**	1	BOT CORNER WALL	**7.75**	9.64	1	EXT WALL	7.12	
		SNGARBS2	20.00		8.77	175.39	1.40	8.77	1	BOT CORNER WALL	7.75	9.64	1	EXT WALL	7.12	
		SNAGRIS2	22.00		8.77	192.93	1.40	8.77	1	BOT CORNER WALL	7.75	9.64	1	EXT WALL	7.12	
		SNCOTTS3	27.25		8.77	238.97	1.40	8.77	1	BOT CORNER WALL	7.75	9.64	1	EXT WALL	7.12	
		SNAGGRS4	34.93		8.77	306.27	1.40	8.77	1	BOT CORNER WALL	7.75	9.64	1	EXT WALL	7.12	
		SNS5A	35.55		8.77	311.75	1.40	8.77	1	BOT CORNER WALL	7.75	9.64	1	EXT WALL	7.12	
		SNS6A	39.95		8.77	350.34	1.40	8.77	1	BOT CORNER WALL	7.75	9.64	1	EXT WALL	7.12	
		SNS7B	42.00		8.77	368.32	1.40	8.77	1	BOT CORNER WALL	7.75	9.64	1	EXT WALL	7.12	
	TRUCK TRACTOR SEMI-TRAILER (TTST)	TNAGRIT3	33.00		8.77	289.39	1.40	8.77	1	BOT CORNER WALL	7.75	9.64	1	EXT WALL	7.12	
		TNT4A	33.08		8.77	290.05	1.40	8.77	1	BOT CORNER WALL	7.75	9.64	1	EXT WALL	7.12	
		TNT6A	41.60		8.77	364.81	1.40	8.77	1	BOT CORNER WALL	7.75	9.64	1	EXT WALL	7.12	
		TNT7A	42.00		8.77	368.32	1.40	8.77	1	BOT CORNER WALL	7.75	9.64	1	EXT WALL	7.12	
		TNT7B	42.00		8.77	368.32	1.40	8.77	1	BOT CORNER WALL	7.75	9.64	1	EXT WALL	7.12	
		TNAGRIT4	43.00		8.77	377.08	1.40	8.77	1	BOT CORNER WALL	7.75	9.64	1	EXT WALL	7.12	
		TNAGT5A	45.00		8.77	394.62	1.40	8.77	1	BOT CORNER WALL	7.75	**9.64**	1	EXT WALL	7.12	
		TNAGT5B	45.00		8.77	394.62	1.40	8.77	1	BOT CORNER WALL	7.75	9.64	1	EXT WALL	7.12	

	LOAD TYPE	MAX. FACTOR	MIN. FACTOR
STRENGTH I LIMIT STATE DESIGN LOAD RATING FACTORS	DC	1.25	0.90
	DW	1.50	0.65
	EV	1.30	0.90
	EH	1.35	0.50 OR 0.90
	ES	1.35	0.50 OR 0.90
	LS	1.75	0.00
	WA	1.00	0.00

NOTES:

RATING FACTORS ARE BASED ON THE STRENGTH I LIMIT STATE.

COMMENTS:

1.
2.
3.
4.

(#) CONTROLLING LOAD RATING

(1) DESIGN LOAD RATING (HL-93)

(2) DESIGN LOAD RATING (HS-20)

(3) LEGAL LOAD RATING **

** SEE CHART FOR VEHICLE TYPE

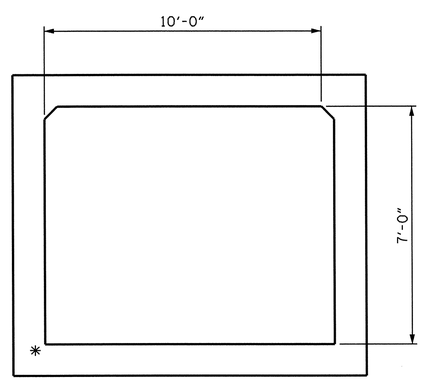

LRFR SUMMARY

* (1) (2) (3) CONTROLS

PROJECT NO. U-2524C

GUILFORD COUNTY

STATION: 313+42.00 -L-

SHEET 8 OF 8

STATE OF NORTH CAROLINA
DEPARTMENT OF TRANSPORTATION
RALEIGH

STANDARD
LRFR SUMMARY FOR REINFORCED CONCRETE BOX CULVERT
(NON-INTERSTATE TRAFFIC)

NORTH CAROLINA PROFESSIONAL SEAL 14855 ENGINEER DOUGLAS R. CALLOUR
6-25-13

REVISIONS						SHEET NO.
NO.	BY:	DATE:	NO.	BY:	DATE:	C-8
1			3			TOTAL SHEETS
2			4			16

ASSEMBLED BY : A. SORSENGINH DATE : 3/2013
CHECKED BY : W. ARAFAT DATE : 3/2013
DRAWN BY : MAA 1/08
CHECKED BY : GM/DI 2/08
REV. 11/12/08RR MAA/GM

25-JUN-2013 11:43
R:\Structures\Plans\asorsenginh\313+42\U2524C_SD_CU.dgn
asorsenginh

F.A. PROJECT: NHF-0708(62)

BM #7: RAIL ROAD SPIKE SET IN 26' OAK TREE 75.5' RT. OF -L- STA. 314+43.53, EL. 812.34

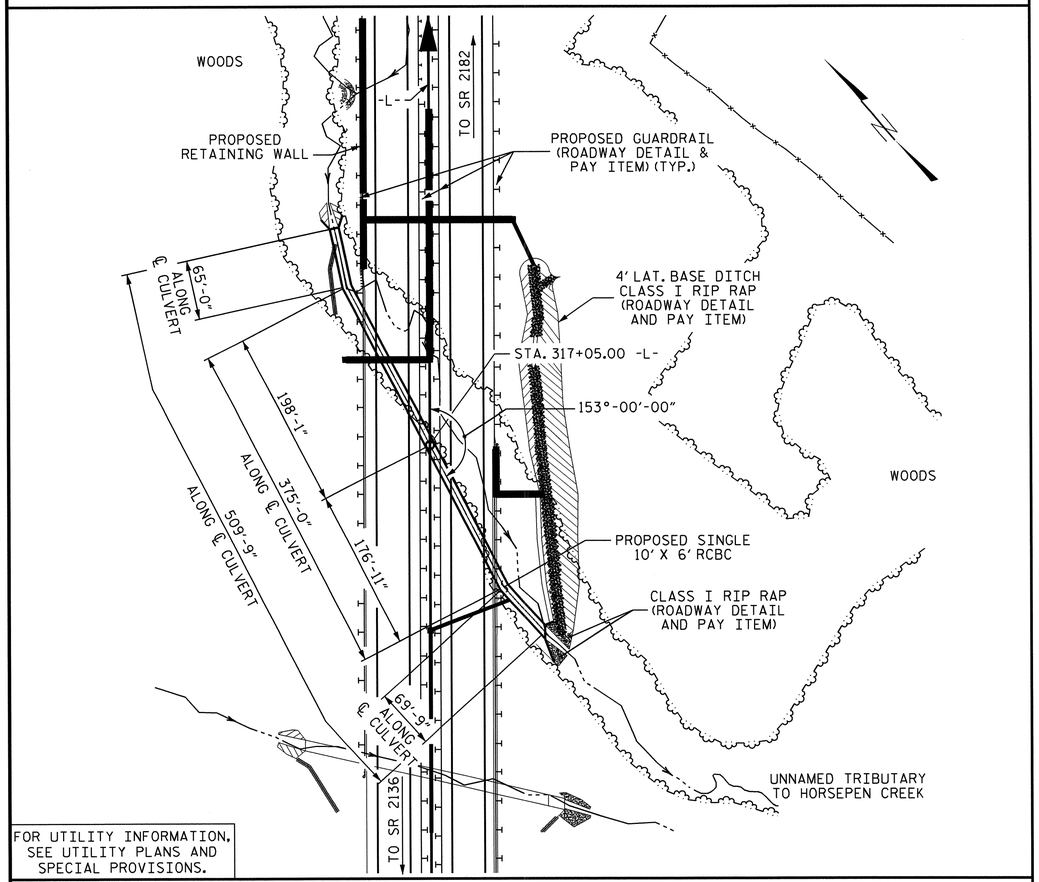

FOR UTILITY INFORMATION, SEE UTILITY PLANS AND SPECIAL PROVISIONS.

LOCATION SKETCH

NOTES

ASSUMED LIVE LOAD ----------HL-93 OR ALTERNATE LOADING.

DESIGN FILL---------- 24.20'

FOR OTHER DESIGN DATA AND NOTES, SEE STANDARD NOTE SHEET.

3"Ø WEEP HOLES INDICATED TO BE IN ACCORDANCE WITH THE SPECIFICATIONS.

CONCRETE IN CULVERTS TO BE POURED IN THE FOLLOWING ORDER:

1. WING FOOTINGS AND FLOOR SLAB INCLUDING 4" OF ALL VERTICAL WALLS.
2. THE REMAINING PORTIONS OF THE WALLS AND WINGS FULL HEIGHT FOLLOWED BY ROOF SLAB AND HEADWALLS.

THE RESIDENT ENGINEER SHALL CHECK THE LENGTH OF CULVERT BEFORE STAKING IT OUT TO MAKE CERTAIN THAT IT WILL PROPERLY TAKE CARE OF THE FILL.

TRANSVERSE CONSTRUCTION JOINTS SHALL BE USED IN THE BARREL, SPACED TO LIMIT THE POURS TO A MAXIMUM OF 70 FT. LOCATION OF JOINTS SHALL BE SUBJECT TO APPROVAL OF THE ENGINEER.

AT THE CONTRACTOR'S OPTION, HE MAY SPLICE THE VERTICAL REINFORCING STEEL IN THE INTERIOR FACE OF EXTERIOR WALL ABOVE LOWER WALL CONSTRUCTION JOINT. THE SPLICE LENGTH SHALL BE AS PROVIDED IN THE SPLICE LENGTH CHART SHOWN ON THE PLANS. EXTRA WEIGHT OF STEEL DUE TO THE SPLICES SHALL BE PAID FOR BY THE CONTRACTOR.

THE CONTRACTOR SHALL PROVIDE INDEPENDENT ASSURANCE SAMPLES OF REINFORCING STEEL AS FOLLOWS: FOR PROJECTS REQUIRING UP TO 400 TONS OF REINFORCING STEEL, ONE 30 INCH SAMPLE OF EACH SIZE BAR USED, AND FOR PROJECTS REQUIRING OVER 400 TONS OF REINFORCING STEEL, TWO 30 INCH SAMPLES OF EACH SIZE BAR USED. THE BARS FROM WHICH THE SAMPLES ARE TAKEN MUST THEN BE SPLICED WITH REPLACEMENT BARS OF THE SIZE AND LENGTH OF THE SAMPLE, PLUS A MINIMUM LAP SPLICE OF THIRTY BAR DIAMETERS. PAYMENT FOR THE SAMPLES OF REINFORCING STEEL SHALL BE CONSIDERED INCIDENTAL TO VARIOUS PAY ITEMS.

A 3 FOOT STRIP OF FILTER FABRIC SHALL BE ATTACHED TO THE FILL FACE OF THE WING COVERING THE ENTIRE LENGTH OF THE EXPANSION JOINTS.

FOR SUBMITTAL OF WORKING DRAWINGS, SEE SPECIAL PROVISIONS.

FOR CRANE SAFETY, SEE SPECIAL PROVISIONS.

FOR FALSEWORK AND FORMWORK, SEE SPECIAL PROVISIONS.

FOR CULVERT DIVERSION DETAILS AND PAY ITEM, SEE EROSION CONTROL PLANS.

FOR GROUT FOR STRUCTURES, SEE SPECIAL PROVISIONS.

NO PRECAST REINFORCED BOX CULVERT OPTION WILL BE ALLOWED.

TOTAL STRUCTURE QUANTITIES

CLASS A CONCRETE				
BARREL @	1.402	CY/FT	714.7	C.Y.
WINGS, ETC.			18.8	C.Y.
SILLS			3.5	C.Y.
TOTAL			737.0	C.Y.
REINFORCING STEEL				
BARREL			81,782	LBS.
WINGS, ETC.			980	LBS.
TOTAL			82,762	LBS.
FOUNDATION CONDITIONING MATERIAL			557	TONS
CULVERT EXCAVATION				LUMP SUM

HYDRAULIC DATA

DESIGN DISCHARGE	= 460 CFS
FREQUENCY OF DESIGN FLOOD	= 50 YRS.
DESIGN HIGH WATER ELEVATION	= 811.40
DRAINAGE AREA	= 0.17 SQ. MI.
BASE DISCHARGE (Q100)	= 500 CFS
BASE HIGH WATER ELEVATION	= 811.81

OVERTOPPING FLOOD DATA

OVERTOPPING DISCHARGE	= 920
FREQUENCY OF OVERTOPPING FLOOD	= 500 YRS. ±
OVERTOPPING FLOOD ELEVATION	= 826.10

GRADE DATA

GRADE POINT ELEVATION @ STA. 317+05.00 -L-	= 826.93'
BED ELEVATION @ STA. 317+05.00 -L-	= 799.76'
ROADWAY FILL SLOPES	= 2:1

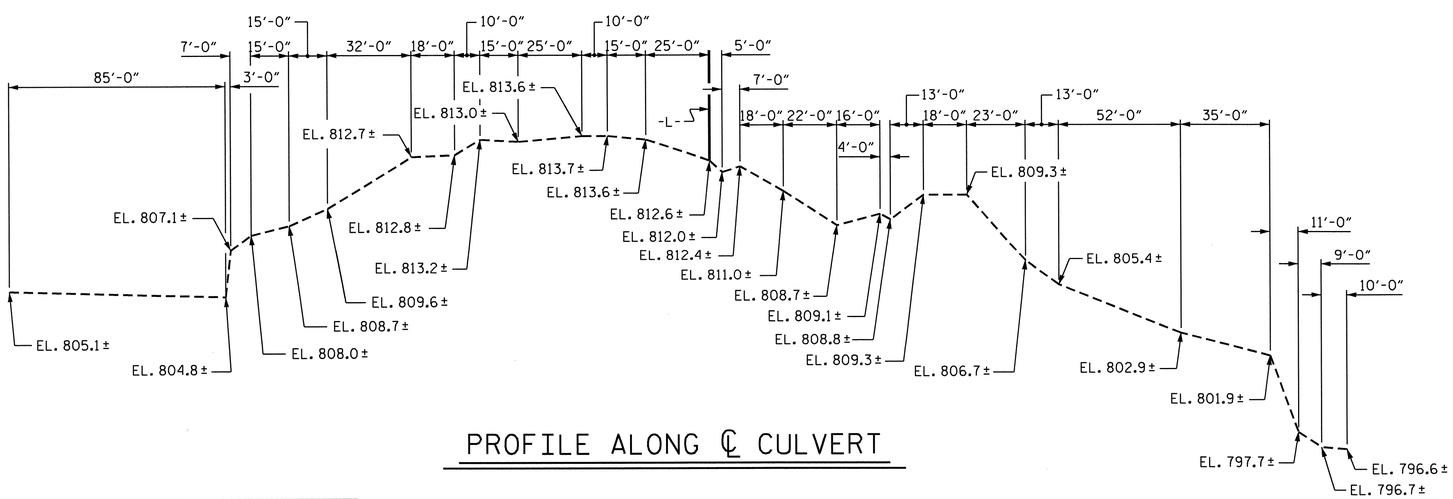

PROFILE ALONG ℄ CULVERT

I HEREBY CERTIFY THESE PLANS ARE THE AS-BUILT PLANS

PROJECT NO. U-2524C
GUILFORD COUNTY
STATION: 317+05.00 -L-

SHEET 1 OF 8

STATE OF NORTH CAROLINA
DEPARTMENT OF TRANSPORTATION
RALEIGH

SINGLE 10 FT. X 6 FT. CONCRETE BOX CULVERT 153° SKEW

REVISIONS								SHEET NO.
NO.	BY:	DATE:	NO.	BY:	DATE:			C-9
1			3					TOTAL SHEETS
2			4					16

DRAWN BY :	A. SORSENGINH	DATE :	3/8/13
CHECKED BY :	E.I. OMILE	DATE :	3/22/13
DESIGN ENGINEER OF RECORD:	A. SORSENGINH	DATE :	4/24/13

NORTH CAROLINA PROFESSIONAL SEAL 022506 ENGINEER JESSE McARTHUR BAILEY
6/25/13

NORTH CAROLINA PROFESSIONAL SEAL 14855 ENGINEER DOUGLAS R. CALHOUN
6-25-13

STD. NO. CB221A

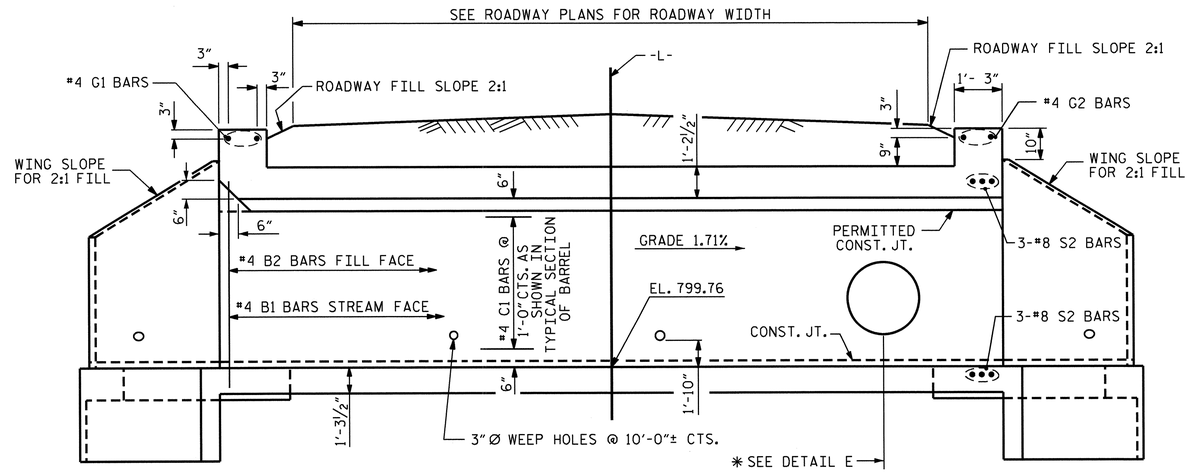

CULVERT SECTION NORMAL TO ROADWAY

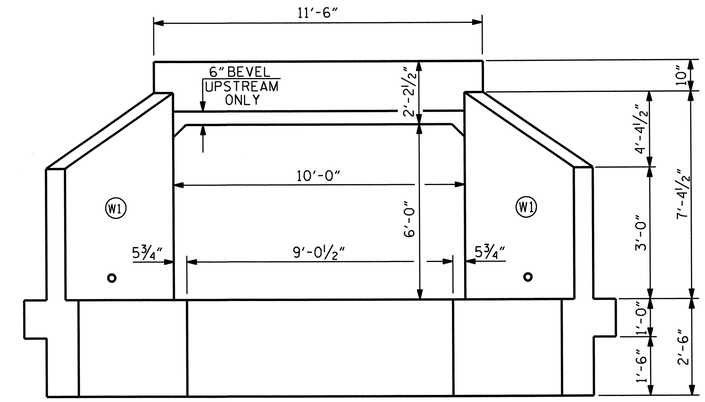

INLET ELEVATION NORMAL TO SKEW

(90°-00'-00")

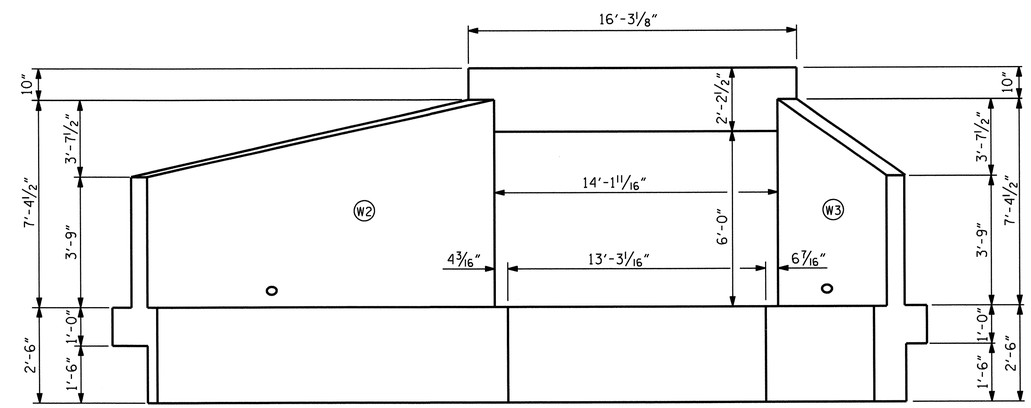

OUTLET ELEVATION NORMAL TO SKEW

(135°-00'-00")

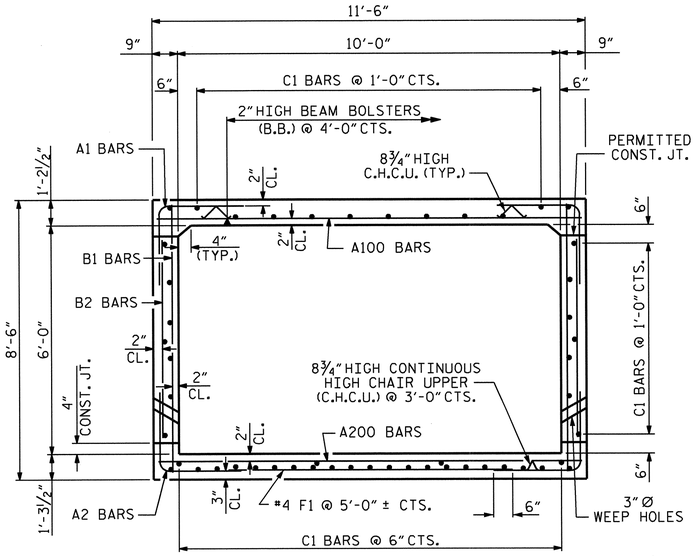

RIGHT ANGLE SECTION OF BARREL

THERE ARE 51 C1 BARS IN SECTION OF BARREL

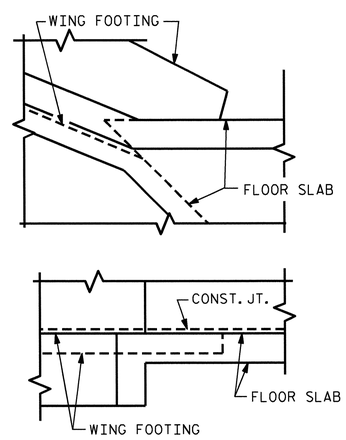

DETAIL

CONNECTION OF WING FOOTING AND FLOOR SLAB WHEN SLAB IS THICKER THAN FOOTING

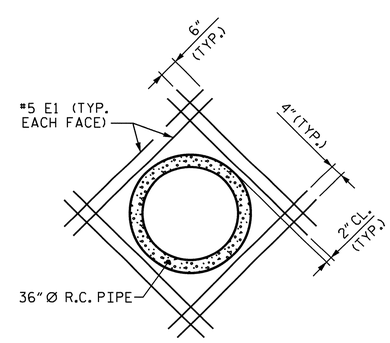

DETAIL E

✳ THE 36" Ø PIPE THROUGH THE SIDE WALL OF THE CULVERT SHALL BE LOCATED BY THE ENGINEER. THE REINFORCING STEEL SHALL BE FIELD BENT AS NECESSARY TO CLEAR PIPE.

PROJECT NO. U-2524C
GUILFORD COUNTY
STATION: 317+05.00 -L-

SHEET 2 OF 8

STATE OF NORTH CAROLINA
DEPARTMENT OF TRANSPORTATION
RALEIGH

SINGLE 10 FT. X 6 FT. CONCRETE BOX CULVERT 153° SKEW

NORTH CAROLINA PROFESSIONAL SEAL 14855 ENGINEER DOUGLAS R. CALHOUN
6-25-13

REVISIONS							SHEET NO.
NO.	BY:	DATE:	NO.	BY:	DATE:		C-10
1			3				TOTAL SHEETS
2			4				16

ASSEMBLED BY : A. SORSENGINH	DATE : 3/2013	SPECIAL	
CHECKED BY : E.I. OMILE	DATE : 3/2013		
DRAWN BY : R.W. WRIGHT	DATE : AUG. 1989	STANDARD	
CHECKED BY : A.R. BISSETTE	DATE : AUG. 1989		

REVISED 11-19-99 BY M.M. CHECKED BY R.W.W.
REVISED 8-28-92 BY E.L.R. CHECKED BY G.R.P.
REVISED 10-2-89 BY A.R.B. CHECKED BY C.R.K.
REDRAWN 8-22-89

STD. NO. CB221

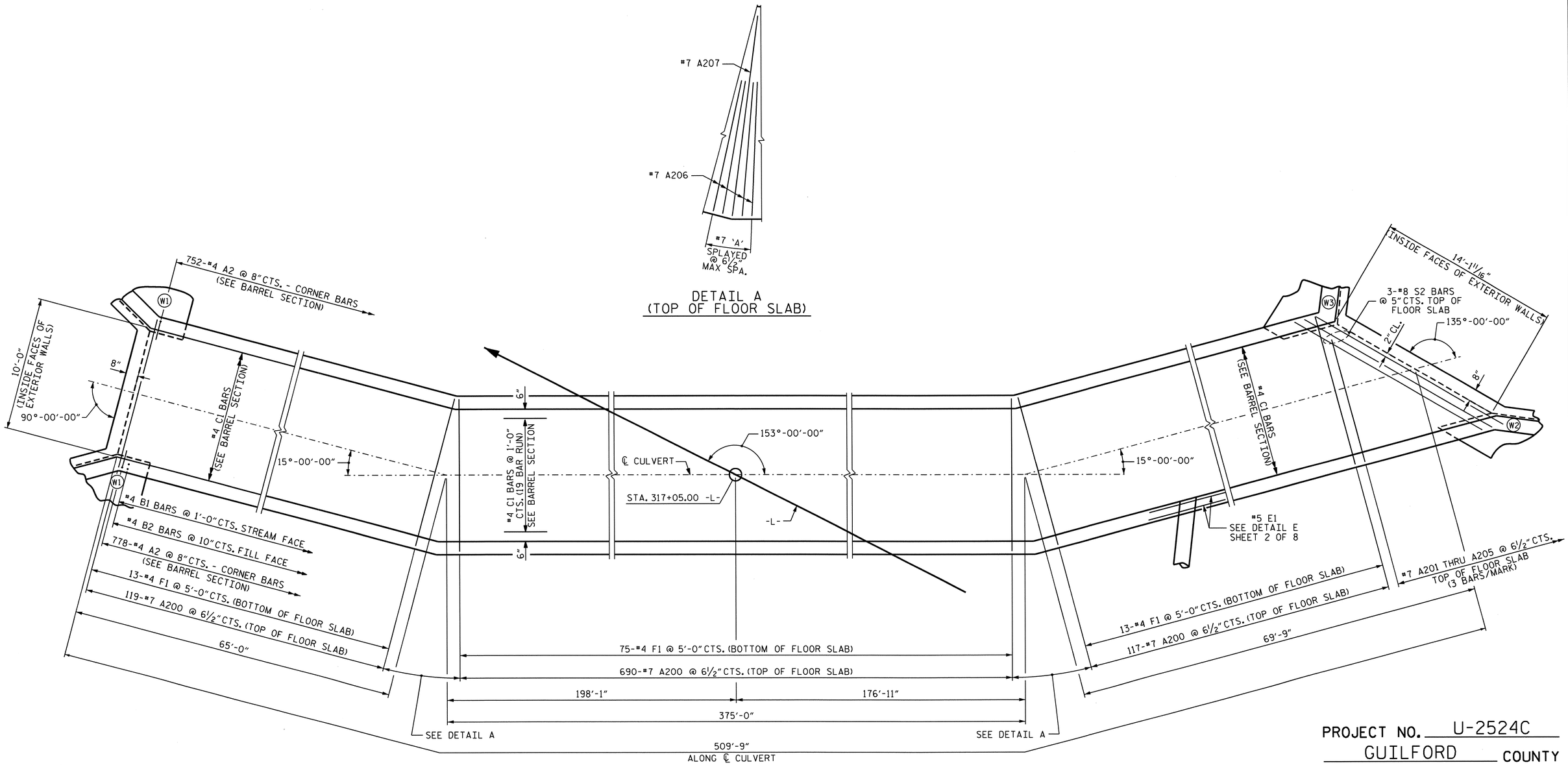

DETAIL A
(TOP OF FLOOR SLAB)

PLAN OF FLOOR SLAB

*C1 BARS SHALL BE FIELD BENT AS NECESSARY

PROJECT NO. U-2524C
GUILFORD COUNTY
STATION: 317+05.00 -L-

SHEET 3 OF 8

STATE OF NORTH CAROLINA
DEPARTMENT OF TRANSPORTATION
RALEIGH

SINGLE 10 FT. X 6 FT. CONCRETE BOX CULVERT 153° SKEW

NORTH CAROLINA PROFESSIONAL SEAL 14855 ENGINEER DOUGLAS R. CALHOUN
6-25-13

REVISIONS							
NO.	BY:	DATE:	NO.	BY:	DATE:	SHEET NO. C-11
1			3			TOTAL SHEETS 16
2			4			

DRAWN BY : A. SORSENGINH DATE : 3/2013
CHECKED BY : E.I. OMILE DATE : 3/2013

25-JUN-2013 11:41
R:\Structures\Plans\asorsenginh\317+05\U2524C_SD_CU.dgn
asorsenginh

NCDOT

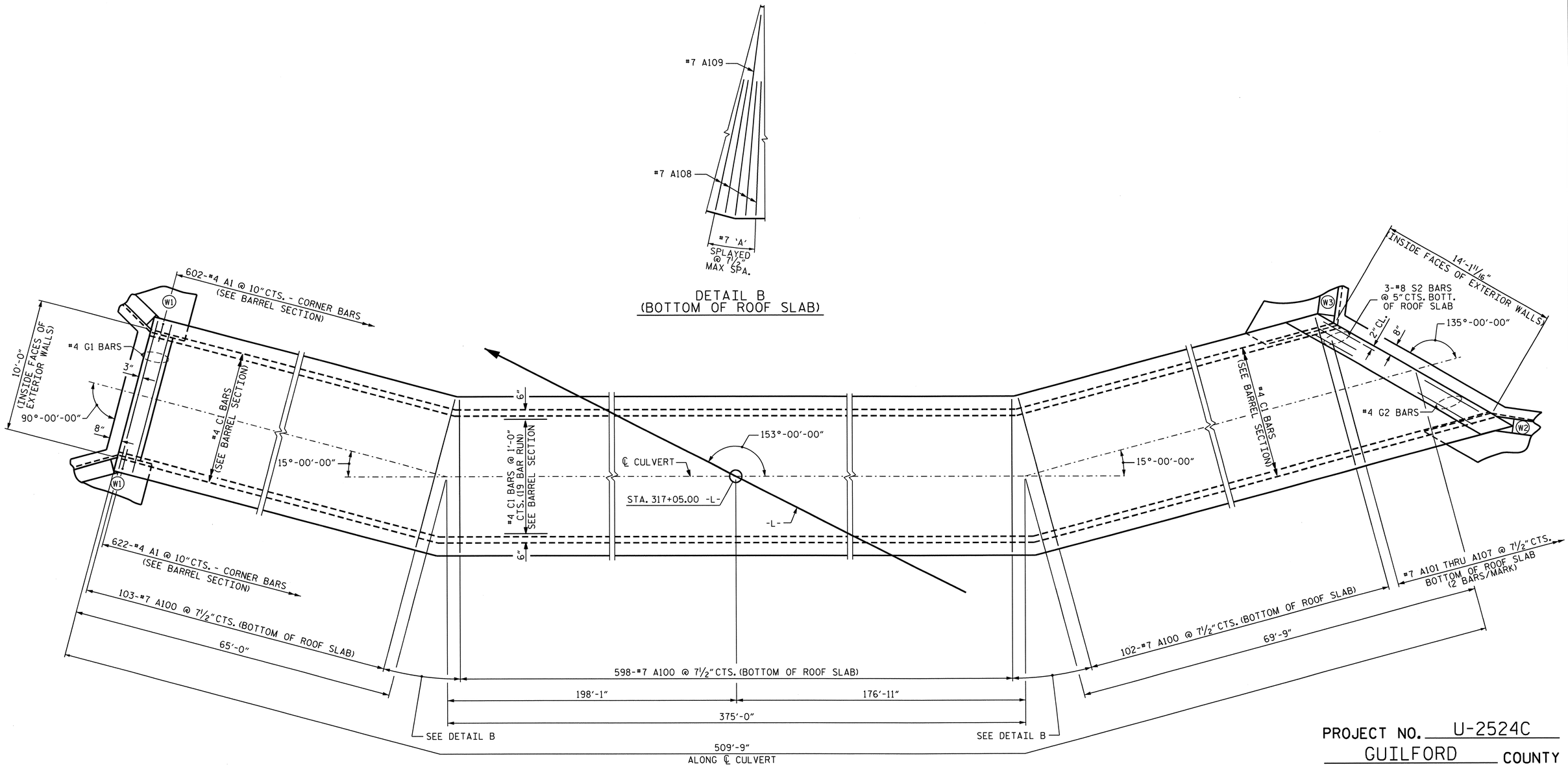

PLAN OF ROOF SLAB

*C1 BARS SHALL BE FIELD BENT AS NECESSARY

PROJECT NO. U-2524C

GUILFORD COUNTY

STATION: 317+05.00 -L-

SHEET 4 OF 8

STATE OF NORTH CAROLINA
DEPARTMENT OF TRANSPORTATION
RALEIGH

SINGLE 10 FT. X 6 FT. CONCRETE BOX CULVERT 153° SKEW

NORTH CAROLINA PROFESSIONAL SEAL 14855 ENGINEER DOUGLAS R. CALHOUN
6-25-13

REVISIONS						SHEET NO.
NO.	BY:	DATE:	NO.	BY:	DATE:	C-12
1			3			TOTAL SHEETS
2			4			16

DRAWN BY : A. SORSENGINH DATE : 3/2013
CHECKED BY : E.I. OMILE DATE : 3/2013

25-JUN-2013 11:41
R:\Structures\Plans\asorsenginh\317+05\U2524C_SD_CU.dgn
asorsenginh

NCBDS

BAR TYPE

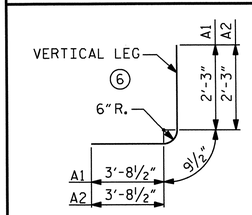

BAR DIMENSIONS ARE OUT TO OUT

SPLICE LENGTH CHART

BAR	SIZE	LENGTH
C1	#4	1'-11"

BAR SCHEDULE

BAR	NO.	SIZE	TYPE	LENGTH	WEIGHT
A100	803	#7	STR	11'-1"	18191
A101	2	#7	STR	9'-10"	40
A102	2	#7	STR	8'-7"	35
A103	2	#7	STR	7'-4"	30
A104	2	#7	STR	6'-1"	25
A105	2	#7	STR	4'-10"	20
A106	2	#7	STR	3'-7"	15
A107	2	#7	STR	2'-4"	10
A108	8	#7	STR	8'-2"	134
A109	2	#7	STR	10'-10"	44
A200	926	#7	STR	11'-1"	20978
A201	3	#7	STR	9'-8"	59
A202	3	#7	STR	8'-0"	49
A203	3	#7	STR	6'-5"	39
A204	3	#7	STR	4'-9"	29
A205	3	#7	STR	3'-2"	19
A206	8	#7	STR	8'-2"	134
A207	2	#7	STR	10'-10"	44

BAR	NO.	SIZE	TYPE	LENGTH	WEIGHT
A1	1224	#4	6	6'-9"	5519
A2	1530	#4	6	6'-9"	6899
B1	1020	#4	STR	8'-0"	5451
B2	1224	#4	STR	5'-4"	4361
C1	969	#4	STR	29'-2"	18879
D1	27	#6	STR	1'-10"	74
E1	16	#5	STR	5'-9"	96
F1	101	#4	STR	4'-9"	320
G1	2	#4	STR	11'-2"	15
G2	2	#4	STR	15'-9"	21
S2	6	#8	STR	15'-9"	252

REINFORCING STEEL = 81,782 LBS

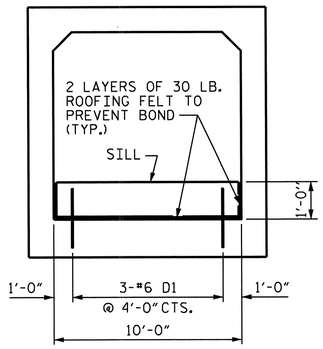

ELEVATION

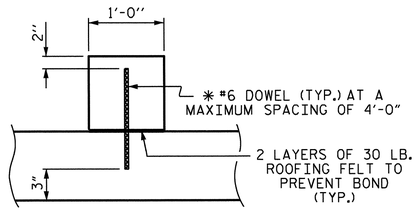

SECTION THROUGH SILL

* DOWELS MAY BE PUSHED INTO GREEN CONCRETE AFTER SLAB HAS BEEN FLOAT FINISHED.

CULVERT SILL DETAILS

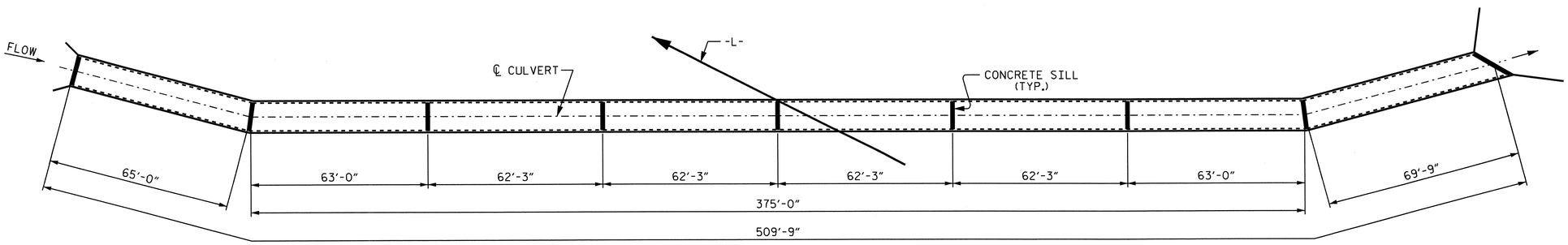

PLAN OF SILLS LOCATION

PROJECT NO. U-2524C
GUILFORD COUNTY
STATION: 317+05.00 -L-

SHEET 5 OF 8

STATE OF NORTH CAROLINA
DEPARTMENT OF TRANSPORTATION
RALEIGH

SINGLE 10 FT. X 6 FT. CONCRETE BOX CULVERT 153° SKEW

NORTH CAROLINA PROFESSIONAL SEAL 14855 ENGINEER DOUGLAS R. CALHOUN
6-25-13

REVISIONS							SHEET NO.
NO.	BY:	DATE:	NO.	BY:	DATE:		C-13
1			3				TOTAL SHEETS
2			4				16

ASSEMBLED BY : A. SORSENGINH DATE : 3/2013
CHECKED BY : E.I. OMILE DATE : 3/2013

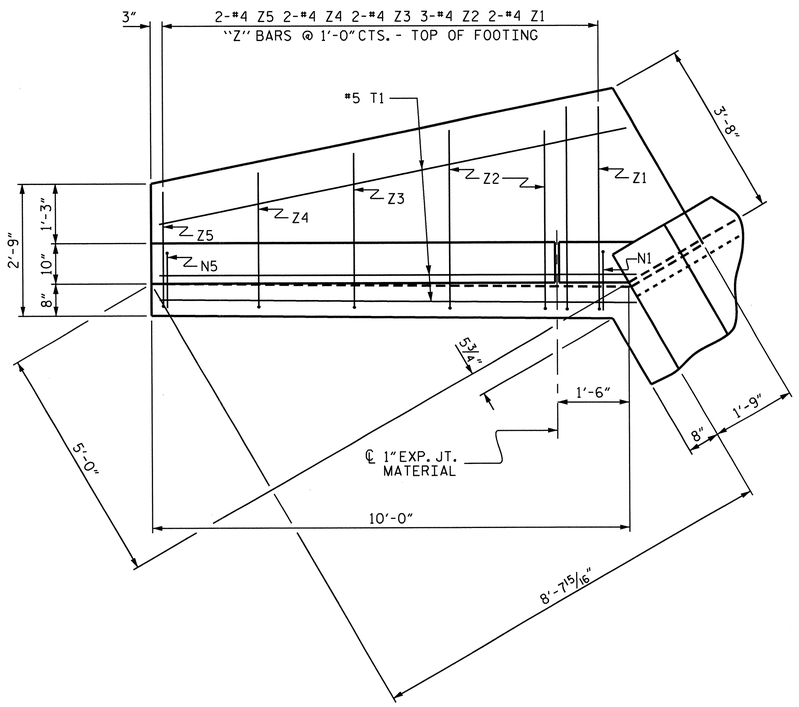

PLAN W1

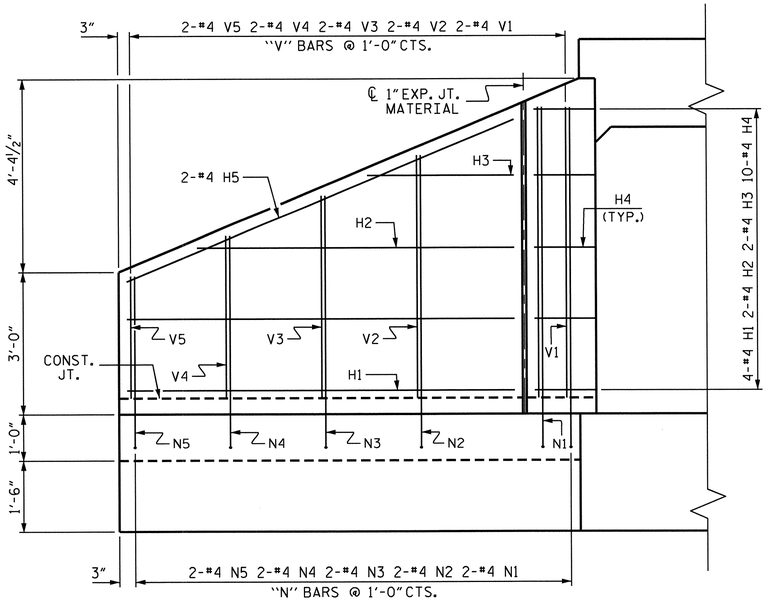

ELEVATION W1

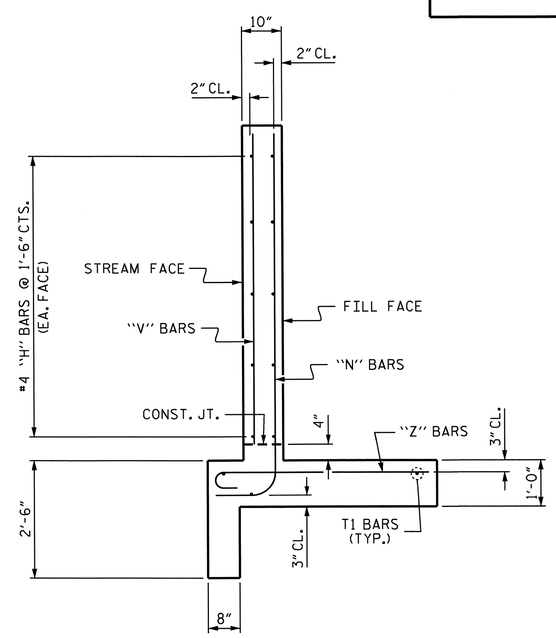

TYPICAL WING SECTION

BAR TYPES

ALL BAR DIMENSIONS ARE OUT TO OUT.

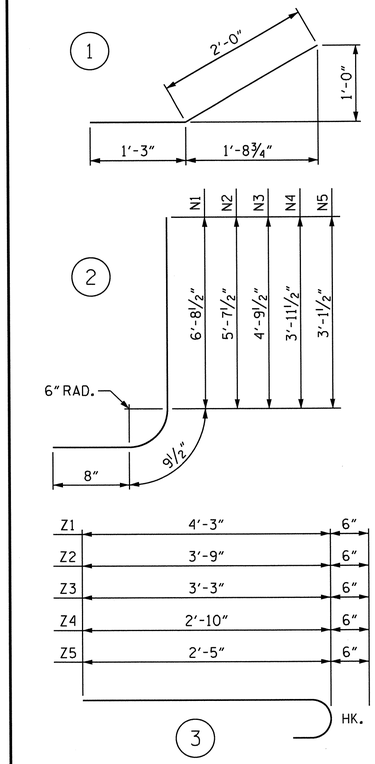

BILL OF MATERIAL

BAR	NO.	SIZE	TYPE	LENGTH	WEIGHT
H1	8	#4	STR	8'-1"	43
H2	4	#4	STR	6'-8"	18
H3	4	#4	STR	3'-1"	8
H4	20	#4	1	3'-3"	43
H5	4	#4	STR	8'-9"	23
N1	4	#4	2	8'-2"	22
N2	4	#4	2	7'-1"	19
N3	4	#4	2	6'-3"	17
N4	4	#4	2	5'-5"	14
N5	4	#4	2	4'-7"	12
T1	6	#5	STR	10'-0"	63
V1	4	#4	STR	6'-1"	16
V2	4	#4	STR	5'-1"	14
V3	4	#4	STR	4'-3"	11
V4	4	#4	STR	3'-5"	9
V5	4	#4	STR	2'-7"	7
Z1	4	#4	3	4'-9"	13
Z2	6	#4	3	4'-3"	17
Z3	4	#4	3	3'-9"	10
Z4	4	#4	3	3'-4"	9
Z5	4	#4	3	2'-11"	8

REINFORCING STEEL FOR 2 WINGS 396 LBS

CLASS A CONCRETE
- 2 WINGS 6.9 CY
- 1 HEADWALL 0.5 CY
- END CURTAIN WALL 0.6 CY
- TOTAL 8.0 CY

PROJECT NO. U-2524C
GUILFORD COUNTY
STATION: 317+05.00 -L-

SHEET 6 OF 8

STATE OF NORTH CAROLINA
DEPARTMENT OF TRANSPORTATION
RALEIGH

STANDARD WINGS FOR CONCRETE BOX CULVERT

H = 6'-0" SLOPE = 2:1
90° SKEW

NORTH CAROLINA PROFESSIONAL SEAL 14855 ENGINEER DOUGLAS R. CALHOUN
6-25-13

REVISIONS						SHEET NO.
NO.	BY:	DATE:	NO.	BY:	DATE:	C-14
1			3			TOTAL SHEETS
2			4			16

ASSEMBLED BY :	A. SORSENGINH	DATE :	3/2013
CHECKED BY :	E.I. OMILE	DATE :	3/2013
DRAWN BY : CCJ	10/99		
CHECKED BY : RWW	03/00		

STD. NO. CW9006

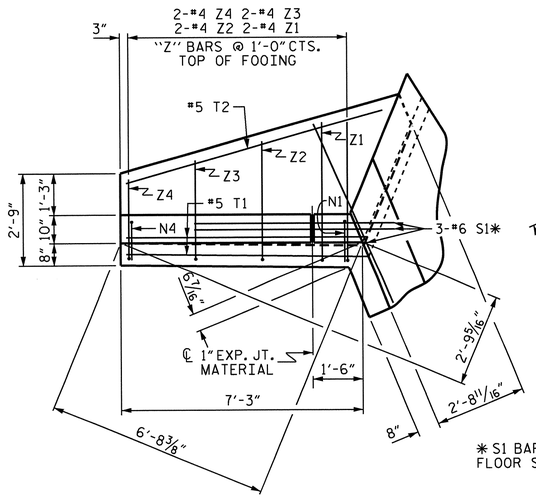

✱ S1 BARS @ BOTTOM OF FLOOR SLAB & FOOTING

PLAN W3

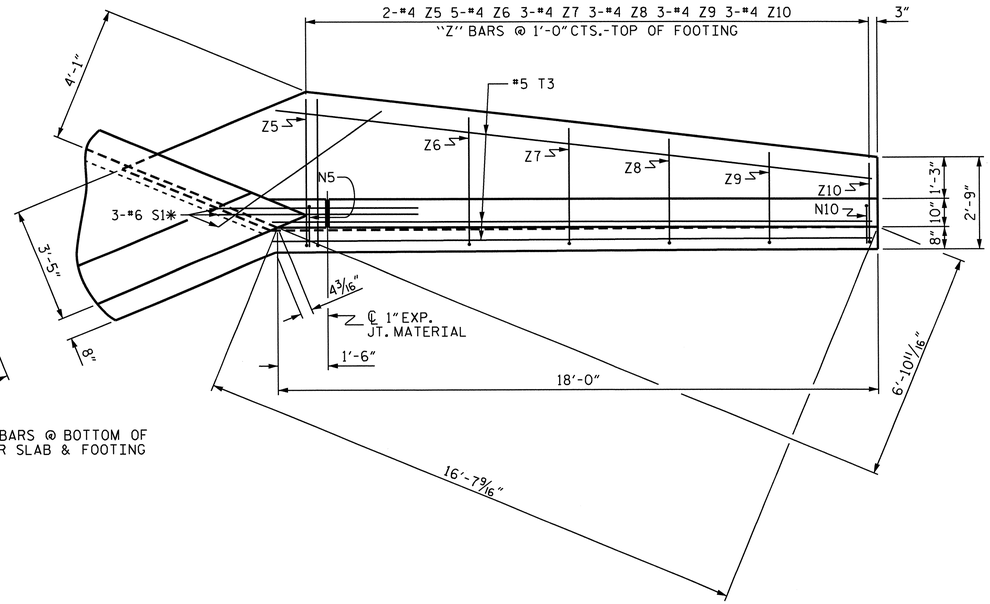

PLAN W2

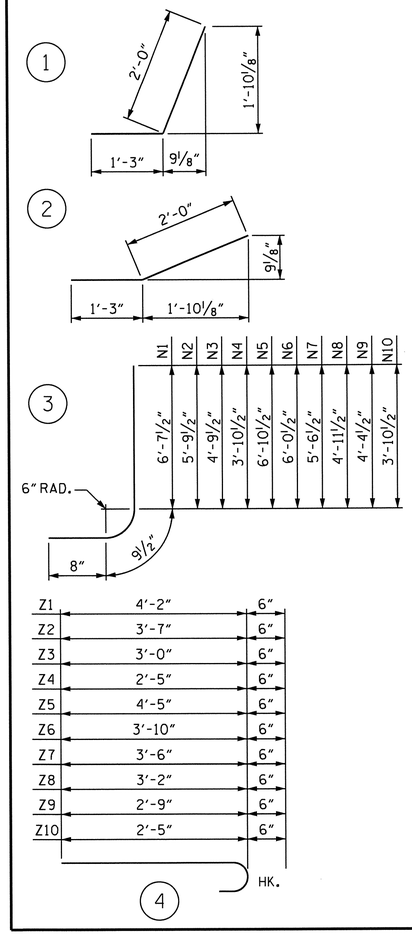

BAR TYPES

ALL BAR DIMENSIONS ARE OUT TO OUT.

BILL OF MATERIAL

BAR	NO.	SIZE	TYPE	LENGTH	WEIGHT
H1	6	#4	STR	5'-4"	21
H2	2	#4	STR	2'-6"	3
H3	10	#4	1	3'-3"	22
H4	2	#4	STR	5'-11"	8
H5	6	#4	STR	16'-1"	64
H6	2	#4	STR	8'-8"	12
H7	10	#4	2	3'-3"	22
H8	2	#4	STR	16'-4"	22
N1	2	#4	3	8'-1"	11
N2	2	#4	3	7'-3"	10
N3	2	#4	3	6'-3"	8
N4	2	#4	3	5'-4"	7
N5	2	#4	3	8'-4"	11
N6	5	#4	3	7'-6"	25
N7	3	#4	3	7'-0"	14
N8	3	#4	3	6'-5"	13
N9	3	#4	3	5'-10"	12
N10	3	#4	3	5'-4"	11
S1	6	#6	STR	6'-0"	54
T1	2	#5	STR	7'-3"	15
T2	1	#5	STR	8'-0"	8
T3	3	#5	STR	18'-0"	56
V1	2	#4	STR	6'-1"	8
V2	2	#4	STR	5'-2"	7
V3	2	#4	STR	4'-3"	6
V4	2	#4	STR	3'-4"	4
V5	2	#4	STR	6'-3"	8
V6	5	#4	STR	5'-6"	18
V7	3	#4	STR	4'-11"	10
V8	3	#4	STR	4'-5"	9
V9	3	#4	STR	3'-10"	8
V10	3	#4	STR	3'-3"	7
Z1	2	#4	4	4'-8"	6
Z2	2	#4	4	4'-1"	6
Z3	2	#4	4	3'-6"	5
Z4	2	#4	4	2'-11"	4
Z5	2	#4	4	4'-11"	7
Z6	5	#4	4	4'-4"	14
Z7	3	#4	4	4'-0"	8
Z8	3	#4	4	3'-8"	7
Z9	3	#4	4	3'-3"	7
Z10	3	#4	4	2'-11"	6

REINFORCING STEEL
FOR 2 WINGS 584 LBS

CLASS A CONCRETE

2 WINGS	9.3	CY
1 HEADWALL	0.7	CY
1 END CURTAIN WALL	0.8	CY
TOTAL	10.8	CY

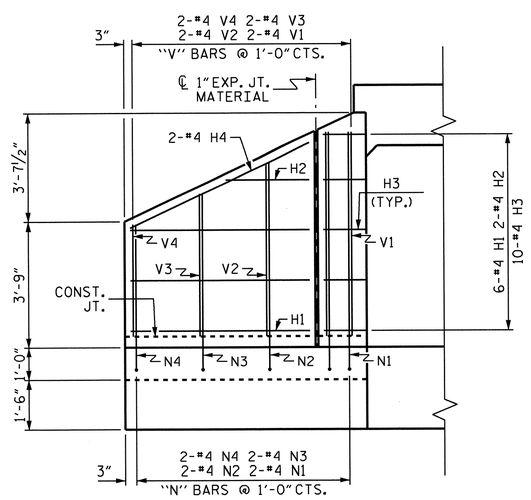

ELEVATION W3

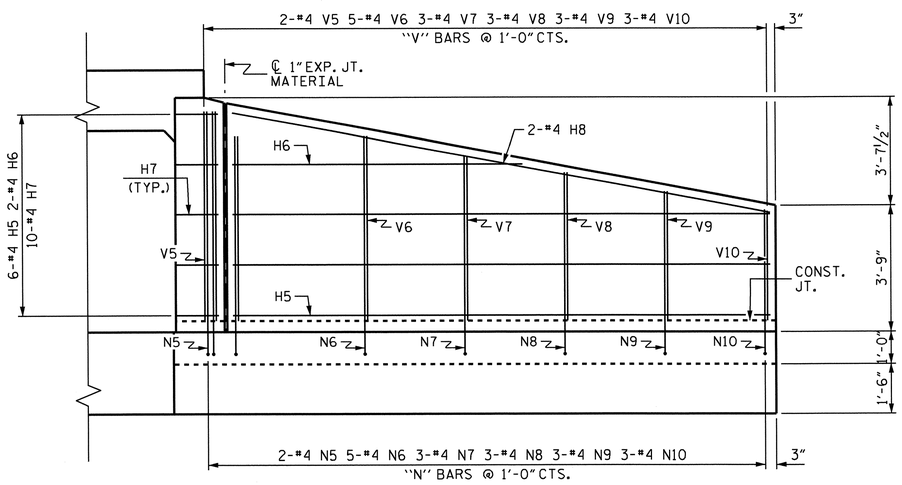

ELEVATION W2

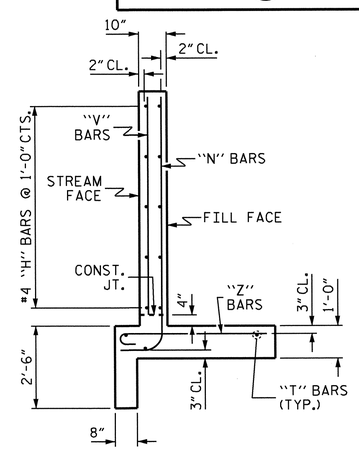

TYPICAL WING SECTION

PROJECT NO. U-2524C

GUILFORD COUNTY

STATION: 317+05.00 -L-

SHEET 7 OF 8

STATE OF NORTH CAROLINA
DEPARTMENT OF TRANSPORTATION
RALEIGH

STANDARD WINGS FOR CONCRETE BOX CULVERT

H = 6'-0" SLOPE = 2:1

135° SKEW

NORTH CAROLINA PROFESSIONAL SEAL 14855 ENGINEER DOUGLAS R. CALHOUN
6-25-13

REVISIONS						SHEET NO.
NO.	BY:	DATE:	NO.	BY:	DATE:	C-15
1			3			TOTAL SHEETS
2			4			16

ASSEMBLED BY : A. SORSENGINH DATE : 3/2013
CHECKED BY : E.I. OMILE DATE : 3/2013

DRAWN BY : CCJ 01/00
CHECKED BY : RWW 03/00

STD. NO. CW4506

LOAD AND RESISTANCE FACTOR RATING (LRFR) SUMMARY FOR REINFORCED CONCRETE BOX CULVERT

LEVEL		VEHICLE	WEIGHT (W) (TONS)	CONTROLLING LOAD RATING (#)	MINIMUM RATING FACTORS (RF)	TONS = W × RF	STRENGTH I LIMIT STATE									COMMENT NUMBER
							LIVE-LOAD FACTORS (γ_{LL})	MOMENT				SHEAR				
								RATING FACTOR	BOX NO.	ELEMENT TYPE	DISTANCE FROM LEFT END OF ELEMENT (ft)	RATING FACTOR	BOX NO.	ELEMENT TYPE	DISTANCE FROM LEFT END OF ELEMENT (ft)	
DESIGN LOAD RATING		HL-93 (INVENTORY)	N/A	(1)	8.35	--	1.75	8.35	1	BOT CORNER WALL	6.71	11.45	1	EXT WALL	1.14	
		HL-93 (OPERATING)	N/A		10.82	--	1.35	10.82	1	BOT CORNER WALL	6.71	14.85	1	EXT WALL	1.14	
		HS-20 (INVENTORY)	36.00	(2)	8.35	300.46	1.75	8.35	1	BOT CORNER WALL	6.71	11.45	1	EXT WALL	1.14	
		HS-20 (OPERATING)	36.00		10.82	389.49	1.35	10.82	1	BOT CORNER WALL	6.71	14.85	1	EXT WALL	1.14	
LEGAL LOAD RATING	SINGLE VEHICLE (SV)	SNSH	13.50	(3)	10.43	140.84	1.40	10.43	1	BOT CORNER WALL	6.71	14.85	1	EXT WALL	1.14	
		SNGARBS2	20.00		10.43	208.65	1.40	10.43	1	BOT CORNER WALL	6.71	14.85	1	EXT WALL	1.14	
		SNAGRIS2	22.00		10.43	229.52	1.40	10.43	1	BOT CORNER WALL	6.71	14.85	1	EXT WALL	1.14	
		SNCOTTS3	27.25		10.43	284.29	1.40	10.43	1	BOT CORNER WALL	6.71	14.85	1	EXT WALL	1.14	
		SNAGGRS4	34.93		10.43	364.36	1.40	10.43	1	BOT CORNER WALL	6.71	14.85	1	EXT WALL	1.14	
		SNS5A	35.55		10.43	370.88	1.40	10.43	1	BOT CORNER WALL	6.71	14.85	1	EXT WALL	1.14	
		SNS6A	39.95		10.43	416.78	1.40	10.43	1	BOT CORNER WALL	6.71	14.85	1	EXT WALL	1.14	
		SNS7B	42.00		10.43	438.17	1.40	10.43	1	BOT CORNER WALL	6.71	14.85	1	EXT WALL	1.14	
	TRUCK TRACTOR SEMI-TRAILER (TTST)	TNAGRIT3	33.00		10.43	344.28	1.40	10.43	1	BOT CORNER WALL	6.71	14.85	1	EXT WALL	1.14	
		TNT4A	33.08		10.43	345.06	1.40	10.43	1	BOT CORNER WALL	6.71	14.85	1	EXT WALL	1.14	
		TNT6A	41.60		10.43	434.00	1.40	10.43	1	BOT CORNER WALL	6.71	14.85	1	EXT WALL	1.14	
		TNT7A	42.00		10.43	438.17	1.40	10.43	1	BOT CORNER WALL	6.71	14.85	1	EXT WALL	1.14	
		TNT7B	42.00		10.43	438.17	1.40	10.43	1	BOT CORNER WALL	6.71	14.85	1	EXT WALL	1.14	
		TNAGRIT4	43.00		10.43	448.60	1.40	10.43	1	BOT CORNER WALL	6.71	14.85	1	EXT WALL	1.14	
		TNAGT5A	45.00		10.43	469.47	1.40	10.43	1	BOT CORNER WALL	6.71	14.85	1	EXT WALL	1.14	
		TNAGT5B	45.00		10.43	469.47	1.40	10.43	1	BOT CORNER WALL	6.71	14.85	1	EXT WALL	1.14	

	LOAD TYPE	MAX. FACTOR	MIN. FACTOR
STRENGTH I LIMIT STATE DESIGN LOAD RATING FACTORS	DC	1.25	0.90
	DW	1.50	0.65
	EV	1.30	0.90
	EH	1.35	0.50 OR 0.90
	ES	1.35	0.50 OR 0.90
	LS	1.75	0.00
	WA	1.00	0.00

NOTES:

RATING FACTORS ARE BASED ON THE STRENGTH I LIMIT STATE.

COMMENTS:

1.
2.
3.
4.

(#) CONTROLLING LOAD RATING

(1) DESIGN LOAD RATING (HL-93)

(2) DESIGN LOAD RATING (HS-20)

(3) LEGAL LOAD RATING **

** SEE CHART FOR VEHICLE TYPE

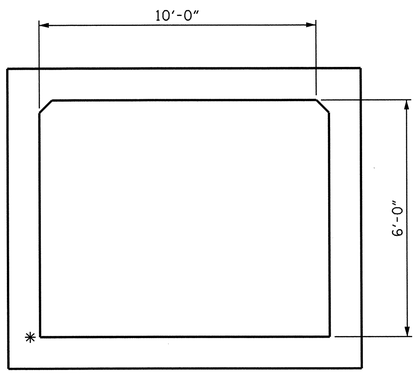

LRFR SUMMARY

* (1) (2) (3) CONTROLS

PROJECT NO. U-2524C

GUILFORD COUNTY

STATION: 317+05.00 -L-

SHEET 8 OF 8

STATE OF NORTH CAROLINA
DEPARTMENT OF TRANSPORTATION
RALEIGH

STANDARD
LRFR SUMMARY FOR REINFORCED CONCRETE BOX CULVERT
(NON-INTERSTATE TRAFFIC)

NORTH CAROLINA PROFESSIONAL SEAL 14855 ENGINEER DOUGLAS R. CALHOUN
6-25-13

REVISIONS						SHEET NO.
NO.	BY:	DATE:	NO.	BY:	DATE:	C-16
1			3			TOTAL SHEETS
2			4			16

ASSEMBLED BY : A. SORSENGINH DATE : 3/2013
CHECKED BY : E.I. OMILE DATE : 3/2013
DRAWN BY : MAA 1/08
CHECKED BY : GM/DI 2/08
REV. 11/12/08RR MAA/GM

25-JUN-2013 11:40
R:\Structures\Plans\asorsenginh\317+05\U2524C_SD_CU.dgn
asorsenginh

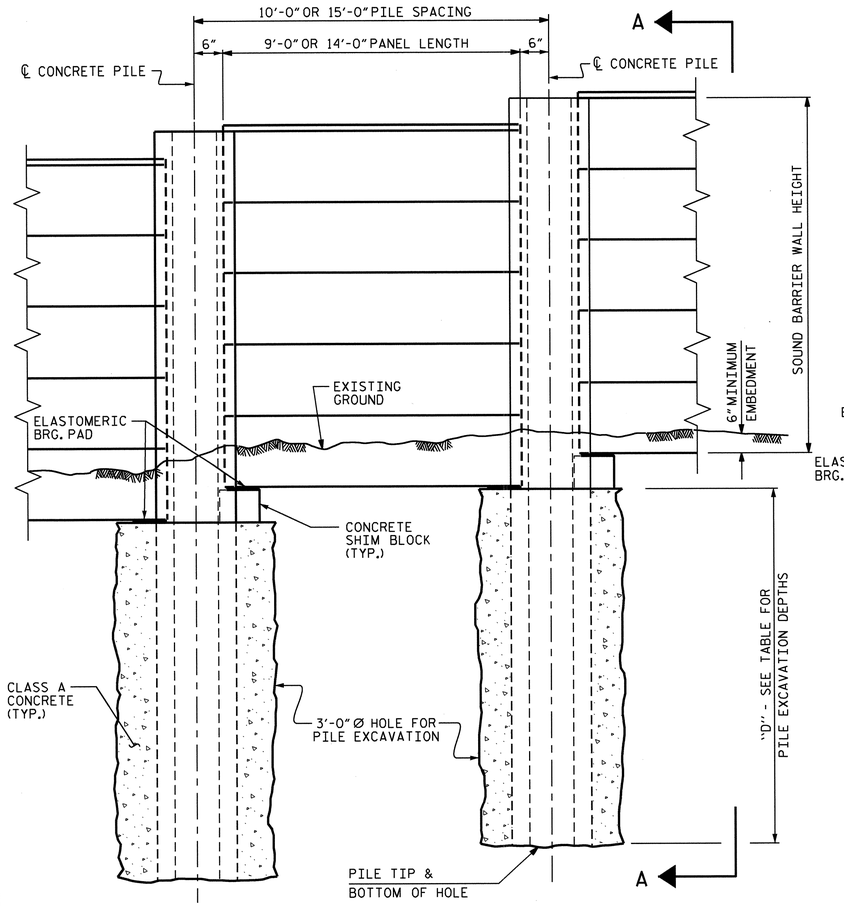

ELEVATION

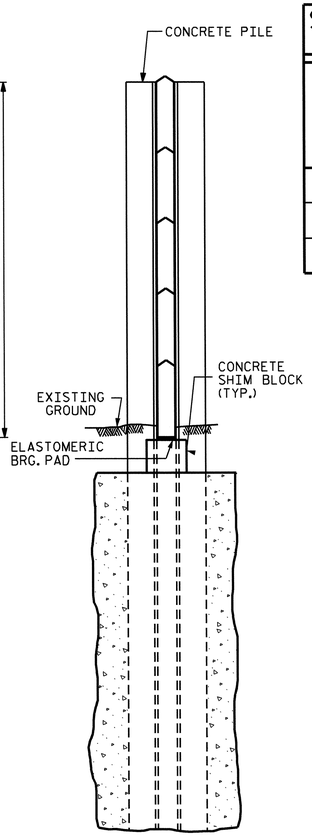

SECTION A-A

STANDARD SOUND BARRIER WALL FOUNDATION TABLES
(PILE EXCAVATION DEPTHS, "D" FOR 36" Ø HOLE

SOUND BARRIER WALL FOUNDATION TABLE No. 1 (Ø = 30°, c = 0 psf, γ = 120 pcf, GROUNDWATER BETWEEN FINISHED GRADE AND BOTTOM OF HOLE WITH FRONT SLOPE/FINISHED GRADE 6:1 OR FLATTER OR GROUNDWATER BELOW BOTTOM OF HOLE WITH FRONT SLOPE/FINISHED GRADE 2:1 OR FLATTER AND STEEPER THAN 3:1)		SOUND BARRIER WALL FOUNDATION TABLE No. 4 (Ø = 34°, c = 0 psf, γ = 120 pcf, GROUNDWATER BETWEEN FINISHED GRADE AND BOTTOM OF HOLE WITH FRONT SLOPE/FINISHED GRADE 6:1 OR FLATTER OR GROUNDWATER BELOW BOTTOM OF HOLE WITH FRONT SLOP/FINISHED GRADE 2:1 OR FLATTER AND STEEPER THAN 3:1)	
PILE SPACING (S)	DEPTH "D"	PILE SPACING (S)	DEPTH "D"
S ≤ 10 FT.	13 FT.	S ≤ 10 FT.	12 FT.
10 FT. < S ≤ 15 FT.	16 FT.	10 FT. < S ≤ 15 FT.	14 FT.

SOUND BARRIER WALL	BEGIN STATION & OFFSET	END STATION & OFFSET	ESTIMATED MAXIMUM WALL HEIGHT	STANDARD SOUND BARRIER WALL FOUNDATION TABLE
No. 1	373+29.30 -L- & 163.41 RT.	375+20.34 -L- & 124.91 RT.	22 FT.	No. 4
* No. 1	375+20.34 -L- & 124.91 RT.	379+45.38 -L- & 74.91 RT.	26 FT.	No. 1

* MAXIMUM WALL HEIGHT OF 26 FT IS OK TO USE STANDARD SOUND BARRIER WALL FOUNDATION TABLE NO. 1.

NOTES

FOR SOUND BARRIER WALL, SEE SPECIAL PROVISIONS.

CONSTRUCT SOUND BARRIER WALL TO LINES AND GRADES SHOWN ON THE ROADWAY PLANS.

PROVIDE PANELS WITH A FLAT BOTTOM.

VERIFY THE LOCATION OF UNDERGROUND UTILITIES BEFORE DRILLING HOLES TO ENSURE SUFFICIENT CLEARANCE IS AVAILABLE.

ADJUST PILE EXCAVATION ELEVATIONS TO MAINTAIN 6" MINIMUM EMBEDMENT OF THE BOTTOM PANEL.

USE CLASS AA FOR PANELS AND CLASS A CONCRETE PILE EXCAVATION BACKFILL, IN ACCORDANCE WITH ARTICLE 1000-4 OF THE STANDARD SPECIFICATIONS.

AT THE CONTRACTOR'S OPTION, USE EITHER 10 FOOT OR 15 FOOT PILE SPACINGS.

FOR SOUND BARRIER WALL STATIONS, OFFSETS, AND WALL ENVELOPE, SEE ROADWAY PLANS.

PLACE 1" Ø BACKER RODS FULL HEIGHT ON EACH SIDE OF THE PRECAST PANELS. SET AND SEAL THE BACKER ROD IN PLACE WITH SEALANT THAT CONFORMS WITH ARTICLE 1028-3 OF THE STANDARD SPECIFICATIONS.

FOR SUBMITTAL OF WORKING DRAWINGS, SEE SPECIAL PROVISIONS.

FOR FALSEWORK AND FORMWORK, SEE SPECIAL PROVISIONS.

AT THE CONTRACTOR'S OPTION, CONTINUOUS FLOIGHT AUGER CAN BE USED FOR PILE EXCAVATION EXCEPT FROM STATION 10+00.00+/- -NW1- TO STATION 11+00.00+/- -NW1- DUE TO ANTICIPATED ROCK. SEE CONTINUOUS FLIGHT AUGER PILES FOR SOUND BARRIER WALLS SPECIAL PROVISION

EXPOSURE CATEGORY B - PILE REINFORCING STEEL

DESIGN WIND PRESSURE =
20 PSF (0' < H ≤ 14'); 25 PSF (14' < H ≤ 25')

PILE TYPE I				PILE TYPE III			
PILE SPACING	MAXIMUM WALL HEIGHT (H)	VERTICAL REINFORCING STEEL	TIES	PILE SPACING	MAXIMUM WALL HEIGHT (H)	VERTICAL REINFORCING STEEL	TIES
10'-0"	H ≤ 25'	4 - #6 EA. FACE	#3 @ 1'-4" CTS.	10'-0"	H ≤ 25'	3 - #7 SHORT FACE 4 - #7 LONG FACE	#3 @ 1'-4" CTS.
15'-0"	H ≤ 25'	4 - #7 EA. FACE	#3 @ 1'-4" CTS.	15'-0"	H ≤ 25'	3 - #8 SHORT FACE 4 - #8 LONG FACE	#3 @ 1'-4" CTS.

PILE TYPE II				PILE TYPE III ALT.			
PILE SPACING	MAXIMUM WALL HEIGHT (H)	VERTICAL REINFORCING STEEL	TIES	PILE SPACING	MAXIMUM WALL HEIGHT (H)	VERTICAL REINFORCING STEEL	TIES
10'-0"	H ≤ 25'	4 - #6 EA. FACE	#3 @ 1'-4" CTS.	10'-0"	H ≤ 25'	3 - #7 SHORT FACE 4 - #7 LONG FACE	#3 @ 1'-4" CTS.
15'-0"	H ≤ 25'	4 - #6 EA. FACE	#3 @ 1'-4" CTS.	15'-0"	H ≤ 25'	3 - #8 SHORT FACE 4 - #8 LONG FACE	#3 @ 1'-4" CTS.

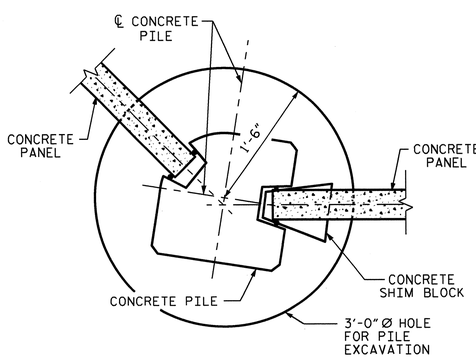

15° TO 45° TURNS
(PILE TYPE III)

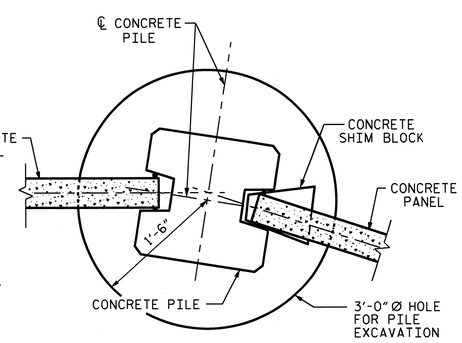

0° TO 15° TURNS
(PILE TYPE I)

TYPICAL WALL TURN DETAILS

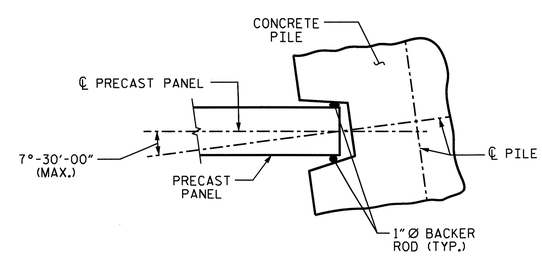

PILE ROTATION LIMIT FOR WALL TURN

(ROTATE THE CONCRETE PILE ±7°-30'-00" TO ACCOMODATE WALL TURN.)

BILL OF MATERIAL	
SOUND BARRIER WALL	S.F. = 13,000
QUANTITIES PROVIDED ARE APPROXIMATE AND ARE FOR BID PURPOSES ONLY.	

PROJECT NO. U-2524C
GUILFORD COUNTY
STATION: 373+29.30 -L-

SHEET 1 OF 3

STATE OF NORTH CAROLINA
DEPARTMENT OF TRANSPORTATION
RALEIGH

STANDARD

SOUND BARRIER WALL

NORTH CAROLINA PROFESSIONAL SEAL 21002 ENGINEER DAVID A. STARK 6/12/13

REVISIONS						SHEET NO.
NO.	BY:	DATE:	NO.	BY:	DATE:	W-1
1			3			TOTAL SHEETS
2			4			3

ASSEMBLED BY : DAVID A. STARK	DATE : 6/2013
CHECKED BY : PAUL S. ERVIN	DATE : 6/2013
DRAWN BY : MAA 6/11	ADDED 10/1/11
CHECKED BY : GM 6/11	

13-JUN-2013 11:37
R:\Structures\Plans\PEF\Sound Barrier Wall\U-2524C_sbw1_12.dgn
dstark

STD. NO. SBW1

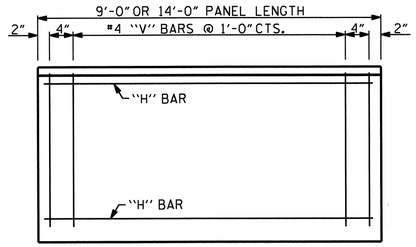

FRONT ELEVATION OF UPPER PRECAST PANELS

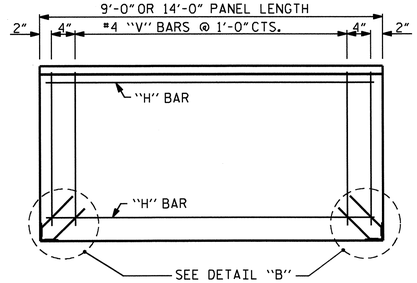

FRONT ELEVATION OF BOTTOM PRECAST PANEL

QUANTITIES FOR ONE PRECAST PANEL (FOR 10'-0" PILE SPACING)													
PANEL HEIGHT	CLASS AA CONCRETE	BAR TYPES											
		HORIZONTAL						VERTICAL					
	C.Y.	NO.	BAR	SIZE	TYPE	LENGTH	WEIGHT (lb)	NO.	BAR	SIZE	TYPE	LENGTH	WEIGHT (lb)
2'-0"	0.22	3	H1	#4	STR	8'-8"	17	11	V1	#4	STR	1'-8"	12
3'-0"	0.33	4	H2	#4	STR	8'-8"	23	11	V2	#4	STR	2'-8"	20
4'-0"	0.44	5	H3	#4	STR	8'-8"	29	11	V3	#4	STR	3'-8"	27

QUANTITIES FOR ONE PRECAST PANEL (FOR 15'-0" PILE SPACING)													
PANEL HEIGHT	CLASS AA CONCRETE	BAR TYPES											
		HORIZONTAL						VERTICAL					
	C.Y.	NO.	BAR	SIZE	TYPE	LENGTH	WEIGHT (lb)	NO.	BAR	SIZE	TYPE	LENGTH	WEIGHT (lb)
3'-0"	0.52	4	H1	#4	STR	13'-8"	37	16	V1	#4	STR	2'-8"	29
4'-0"	0.69	5	H2	#4	STR	13'-8"	46	16	V2	#4	STR	3'-8"	39
5'-0"	0.86	6	H3	#4	STR	13'-8"	55	16	V3	#4	STR	4'-8"	50
6'-0"	1.04	7	H4	#4	STR	13'-8"	64	16	V4	#4	STR	5'-8"	61

ADDITIONAL BARS FOR ONE BOTTOM PANEL					
NO.	BAR	SIZE	TYPE	LENGTH	WEIGHT (lb)
4	S1	#5	1	1'-6"	6

BAR TYPE

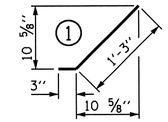

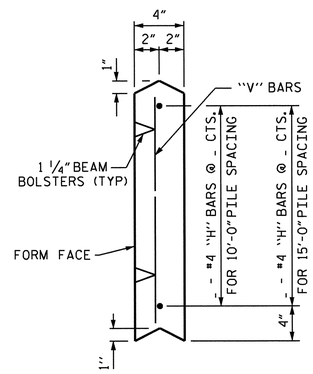

UPPER PANEL

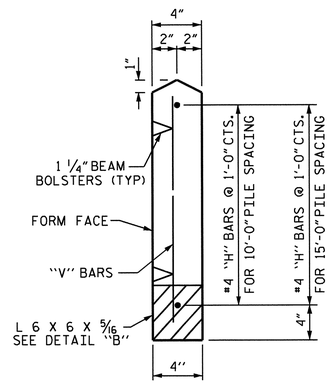

BOTTOM PANEL

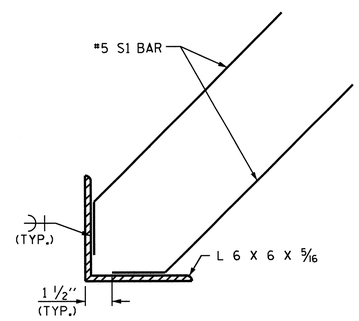

DETAIL "B"

SECTION THROUGH PRECAST PANELS

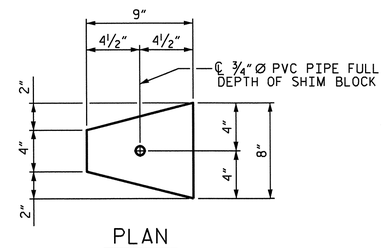

PLAN

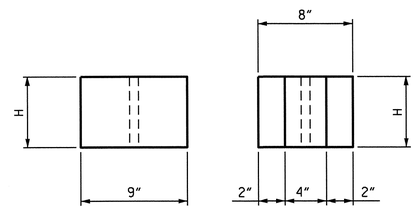

ELEVATION END

CONCRETE SHIM BLOCK

H = 3", 6" or 1'-0"

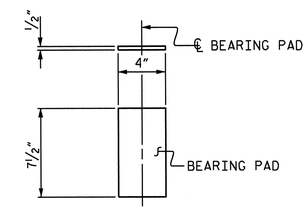

ELASTOMERIC BEARING DETAILS

ELASTOMER IN BEARINGS SHALL BE 50 DUROMETER HARDNESS.

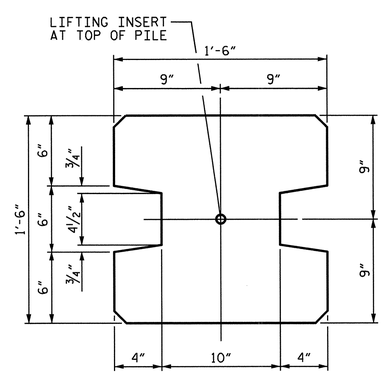

TYPE - I
(AREA = 1.9444 SQ. FT.)

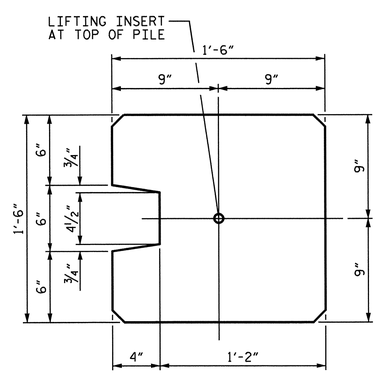

TYPE - II
(AREA = 2.0903 SQ. FT.)

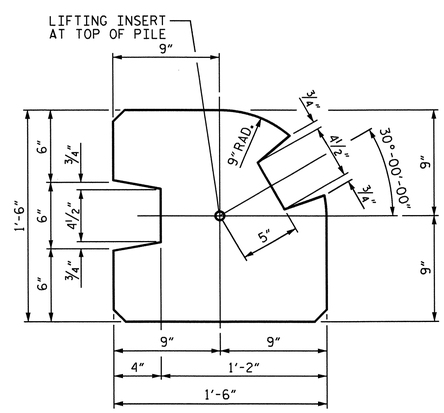

TYPE - III
(AREA = 1.8336 SQ. FT.)

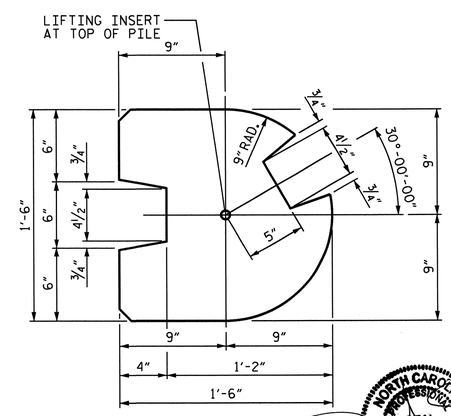

TYPE - III (ALT.)
(AREA = 1.7163 SQ. FT.)

PILE DETAIL

(ALL CORNERS TO BE CHAMFERED 1")

PROJECT NO. U-2524
GUILFORD COUNTY
STATION: 373+29.30 -L-

SHEET 2 OF 3

STATE OF NORTH CAROLINA
DEPARTMENT OF TRANSPORTATION
RALEIGH

STANDARD

SOUND BARRIER WALL DETAILS

NORTH CAROLINA PROFESSIONAL SEAL 019032 ENGINEER DAVID A. STARK 6/12/13

REVISIONS						
NO.	BY:	DATE:	NO.	BY:	DATE:	
1			3			
2			4			

SHEET NO. W-2
TOTAL SHEETS 3

STD. NO. SBW2

ASSEMBLED BY : DAVID A. STARK		DATE : 6/2013	
CHECKED BY : PAUL S. ERVIN		DATE : 6/2013	
DRAWN BY : MAA 6/11	ADDED 8/31/11		
CHECKED BY : GM 6/11			

13-JUN-2013 11:39
R:\Structures\Plans\PEF\Sound Barrier Wall\U-2524C_sbw2_12.dgn
dstark

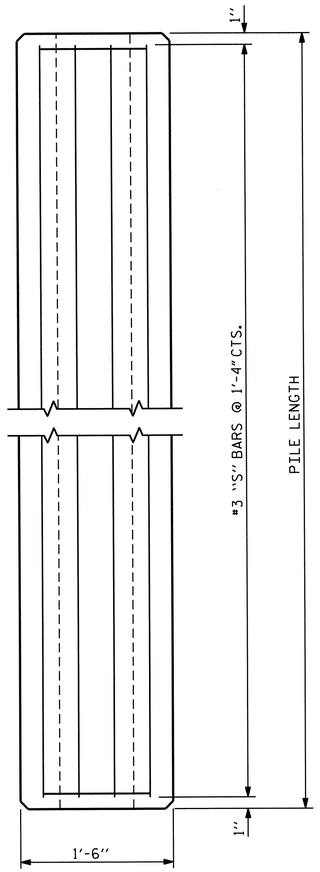

ELEVATION

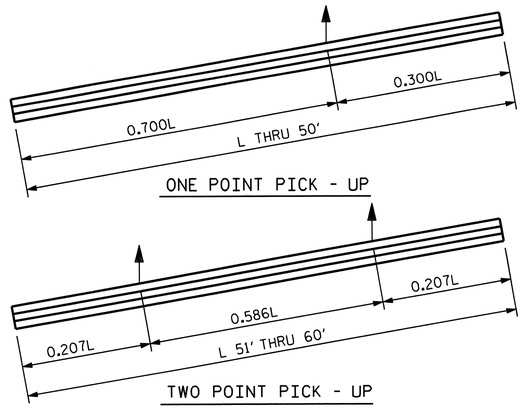

ONE POINT PICK - UP

TWO POINT PICK - UP

PICK - UP POINTS

NOTES

CONCRETE DESIGN DATA : f'c = 5,000 PSI

PROPOSED DEVICES FOR LIFTING PILES, RECESS DETAILS, AND PATCHING MATERIAL SHALL BE DETAILED IN SHOP DRAWINGS. AFTER ATTACHMENTS HAVE BEEN REMOVED, OPENINGS SHALL BE REPAIRED SUCH THAT THE APPEARANCE OF THE PILE IS UNIFORM.

WHERE CAST-IN-PLACE LIFTING DEVICES ARE NOT USED, PICK-UP POINTS TO BE INDICATED WITH A BLACK MARK 2" WIDE.

THE SLIP-FORM METHOD OF CASTING PILES WILL NOT BE PERMITTED.

ALL CORNERS TO BE CHAMFERED 1".

QUANTITIES FOR ONE PRECAST CONCRETE PILE

LENGTH	APPROX. PILE WT. TONS	ONE PICK-UP POINT		TWO PICK-UP POINT	
		0.300L	0.700L	0.207L	0.586L
10'-0"	1.56	3'-0"	7'-0"		
15'-0"	2.35	4'-6"	10'-6"		
20'-0"	3.14	6'-0"	14'-0"		
25'-0"	3.93	7'-6"	17'-6"		
30'-0"	4.70	9'-0"	21'-0"		
35'-0"	5.49	10'-6"	24'-6"		
40'-0"	6.28	12'-0"	28'-0"		
45'-0"	7.05	13'-6"	31'-6"		
50'-0"	7.84	15'-0"	35'-0"		
55'-0"	8.63			11'-4½"	32'-3"
60'-0"	9.42			12'-5"	35'-2"

BAR TYPES

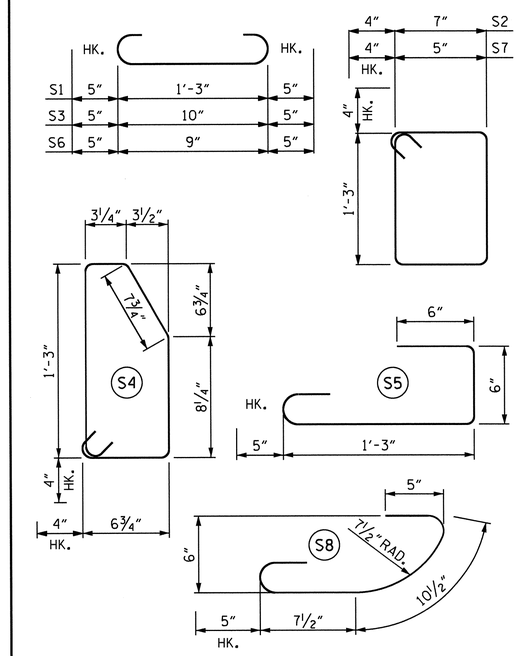

ALL BAR DIMENSIONS ARE OUT TO OUT.

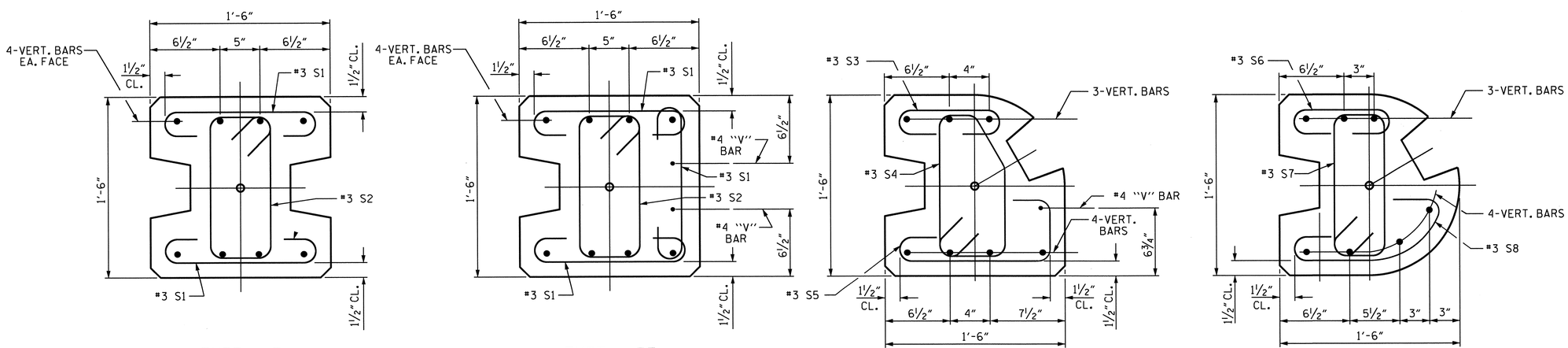

TYPE - I

TYPE - II

TYPE - III

TYPE - III (ALT.)

PILE DETAIL

SEE EXPOSURE CATEGORY CHART FOR VERT. BAR PILE REINFORCING (SHEET 1 OF 3)

PROJECT NO. U-2524C

GUILFORD COUNTY

STATION: 373+29.30 -L-

SHEET 3 OF 3

STATE OF NORTH CAROLINA
DEPARTMENT OF TRANSPORTATION
RALEIGH

STANDARD

SOUND BARRIER WALL DETAILS

NORTH CAROLINA PROFESSIONAL SEAL 31032 ENGINEER DAVID A. STARK

REVISIONS								SHEET NO.
NO.	BY:	DATE:	NO.	BY:	DATE:			W-3
1			3					TOTAL SHEETS
2			4					3

ASSEMBLED BY : DAVID A. STARK		DATE : 6/2013	
CHECKED BY : PAUL S. ERVIN		DATE : 6/2013	
DRAWN BY : MAA	6/11	ADDED	8/31/11
CHECKED BY : GM	6/11		

13-JUN-2013 11:41
R:\Structures\Plans\PEF\Sound Barrier Wall\U-2524C_sbw3_12.dgn
dstark

STD. NO. SBW3

GEOTECHNICAL ENGINEER	ENGINEER
NORTH CAROLINA PROFESSIONAL SEAL 027869 ENGINEER DAVID L. TEAGUE — David L. Teague 7/15/13	
SIGNATURE DATE	SIGNATURE DATE

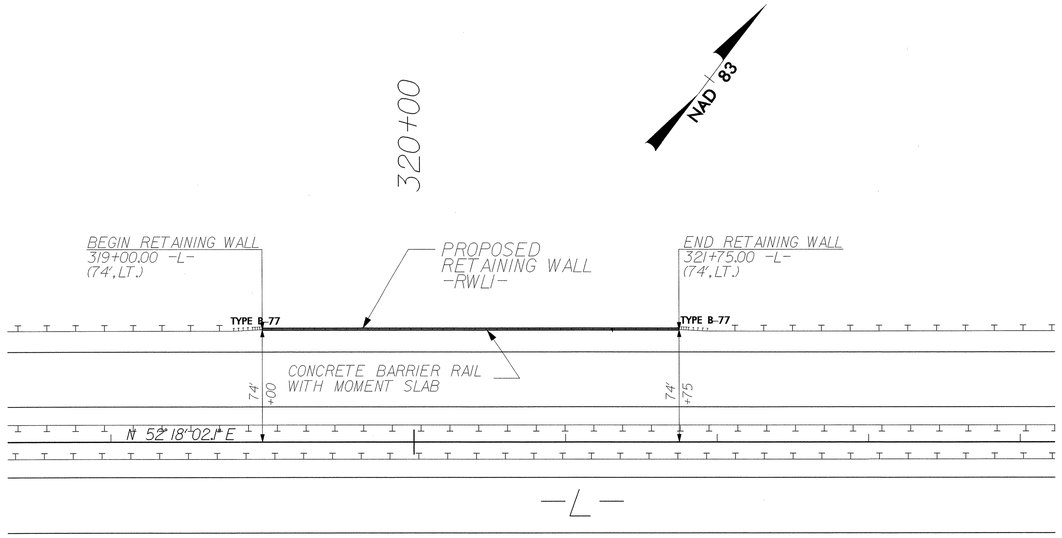

MSE RETAINING WALL NO.1 PLAN VIEW

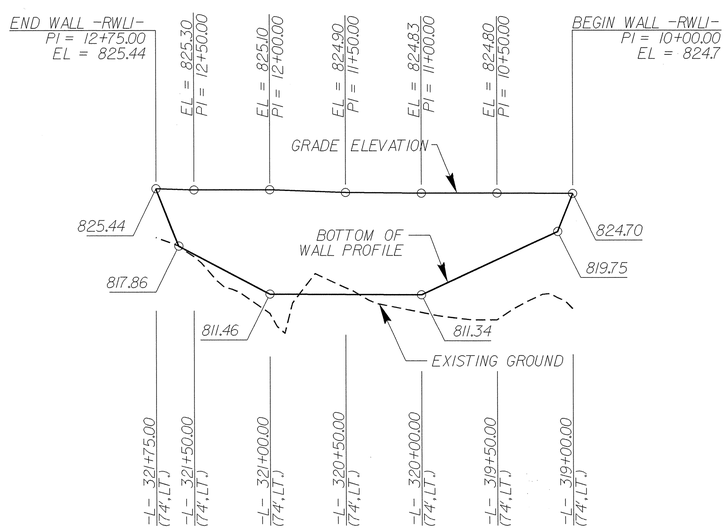

MSE RETAINING WALL NO.1 WALL ENVELOPE - FRONT FACE

NOTES:

FOR MECHANICALLY STABILIZED EARTH (MSE) RETAINING WALLS, SEE MECHANICALLY STABILIZED EARTH RETAINING WALLS PROVISION.

A CONCRETE BARRIER RAIL WITH MOMENT SLAB IS REQUIRED ABOVE RETAINING WALL NO. 1. SEE PLANS FOR CONCRETE BARRIER RAIL WITH MOMENT SLAB DETAILS.

USE AN MSE WALL SYSTEM WITH PRECAST CONCRETE PANELS THAT MEET SECTION 1077 OF THE STANDARD SPECIFICATIONS FOR RETAINING WALL NO. 1.

A DRAIN IS REQUIRED FOR RETAINING WALL NO. 1.

BEFORE BEGINNING MSE WALL DESIGN FOR RETAINING WALL NO. 1, SURVEY WALL LOCATION AND SUBMIT A REVISED WALL PROFILE VIEW (WALL ENVELOPE) FOR REVIEW. DO NOT START WALL DESIGN OR CONSTRUCTION UNTIL THE REVISED WALL ENVELOPE IS ACCEPTED.

DESIGN RETAINING WALL NO. 1 FOR THE FOLLOWING:
1) H = DESIGN HEIGHT + EMBEDMENT
2) DESIGN LIFE = 100 YEARS
3) MAXIMUM FACTORED VERTICAL STRESS ON FOUNDATION MATERIAL = 3,700 LB/SF
4) MINIMUM REINFORCEMENT RATIO (L:H) = 0.75
5) MINIMUM EMBEDMENT ELEVATION = 806 FT (FROM STATION 320+00 -L- TO STATION 321+00 -L-) SEE SPECIAL PROVISION FOR MINIMUM EMBEDMENT OUTSIDE OF THIS RANGE.
6) AGGREGATE PARAMETERS:

AGGREGATE TYPE*	UNIT WEIGHT (γ) LB/CF	FRICTION ANGLE (ϕ) DEGREES	COHESION (c) LB/SF
COARSE	110	38	0
*SEE MSE RETAINING WALLS PROVISION FOR COARSE AGGREGATE MATERIAL REQUIREMENTS.			

7) IN-SITU ASSUMED MATERIAL PARAMETERS:

MATERIAL TYPE	UNIT WEIGHT (γ) LB/CF	FRICTION ANGLE (ϕ) DEGREES	COHESION (c) LB/SF
BACKFILL	120	30	0
FOUNDATION	120	30	0

THE MINIMUM EMBEDMENT ELEVATION FOR RETAINING WALL NO. 1 INCLUDES EMBEDMENT FOR SCOUR.

DESIGN RETAINING WALL NO. 1 FOR A LIVE LOAD (TRAFFIC) SURCHARGE.

DO NOT PLACE LEVELING PAD CONCRETE, AGGREGATE OR REINFORCEMENT FOR RETAINING WALL NO. 1 UNTIL EXCAVATION DIMENSIONS AND FOUNDATION MATERIAL ARE APPROVED.

ESTIMATED MSE WALL QUANTITIES (SQUARE FEET)	
MSE RETAINING WALL NO. 1	2,900 SF

PROJECT NO.: U-2524C (34820.1.1)
GUILFORD **COUNTY**
STATION: 319+00 -L- TO 321+75 -L-

SHEET 1 OF 2

GEOTECHNICAL ENGINEERING UNIT

☐ EASTERN REGIONAL OFFICE
☐ WESTERN REGIONAL OFFICE
☒ CONTRACT OFFICE

STATE OF NORTH CAROLINA
DEPARTMENT OF TRANSPORTATION
RALEIGH

RETAINING WALL NO.1
MSE WALL
WALL ENVELOPE AND PLAN VIEW

REVISIONS							SHEET NO.
NO.	BY	DATE	NO.	BY	DATE		W-4
1			3				TOTAL SHEETS
2			4				9

PREPARED BY:	D.TEAGUE	DATE:	7/13
REVIEWED BY:	M.MULLA	DATE:	7/13

GEOTECHNICAL ENGINEER	ENGINEER
NORTH CAROLINA PROFESSIONAL SEAL 027869 ENGINEER DAVID L. TEAGUE	
SIGNATURE: David L. Teague DATE: 7/15/13	SIGNATURE DATE

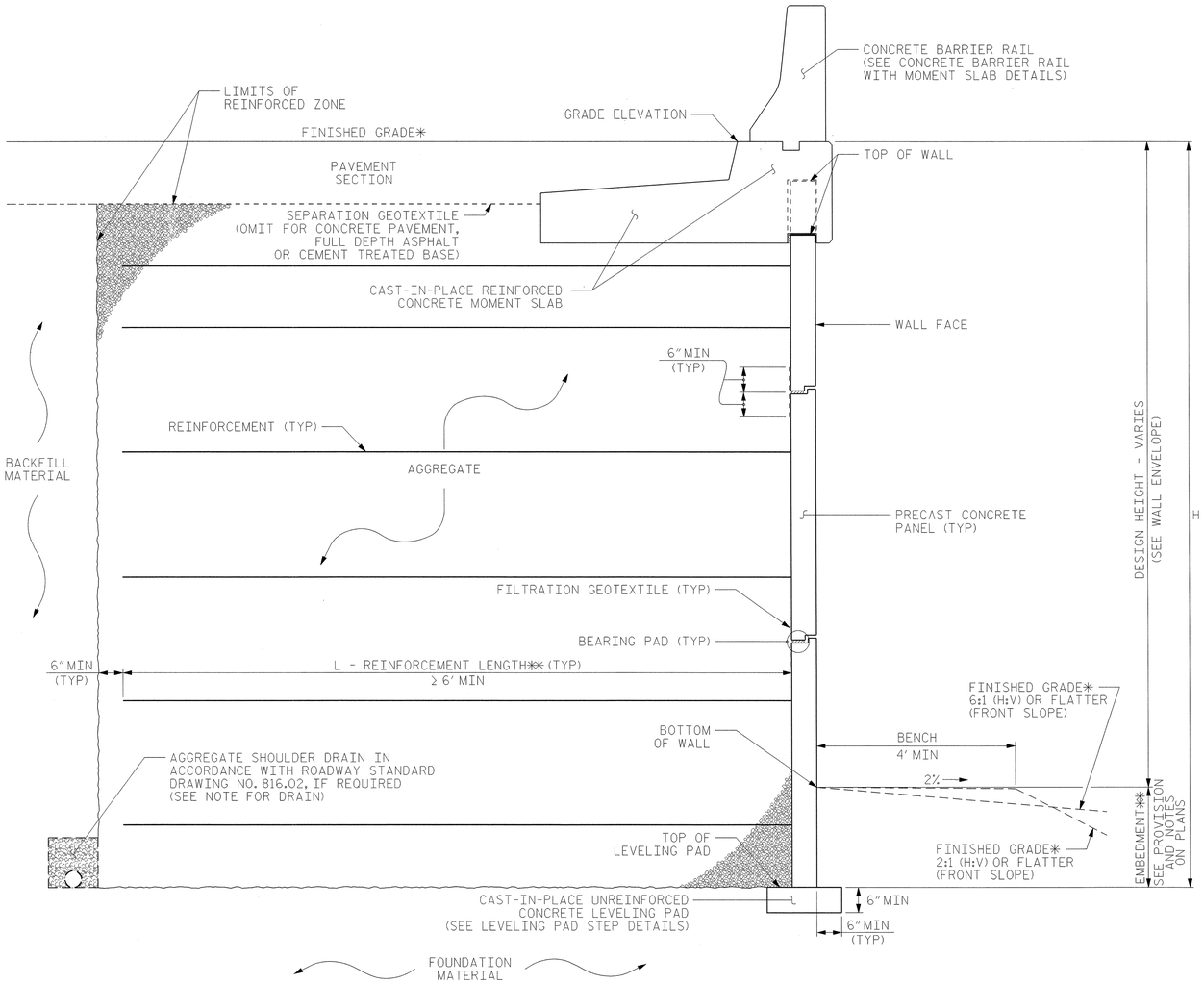

MSE RETAINING WALL NOS. 1 AND 3 - TYPICAL SECTION

*SEE ROADWAY PLANS FOR FINISHED GRADE DETAILS.
**SEE MSE RETAINING WALLS PROVISION AND NOTES ON PLANS FOR EMBEDMENT AND REINFORCEMENT LENGTH REQUIREMENTS.

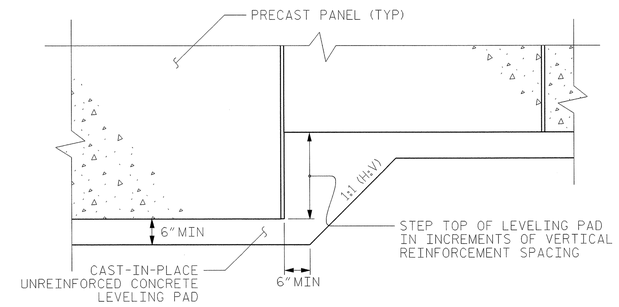

PRECAST CONCRETE PANELS

LEVELING PAD STEP DETAILS

PROJECT NO.: U-2524C (34820J.I)

GUILFORD **COUNTY**

STATION: 319+00 -L- TO 321+75 -L- AND 357+25 -L- TO 359+50 -L-

SHEET 2 OF 2

PREPARED BY: D.TEAGUE	DATE: 7/13
REVIEWED BY: M.MULLA	DATE: 7/13

GEOTECHNICAL ENGINEERING UNIT

☐ EASTERN REGIONAL OFFICE
☐ WESTERN REGIONAL OFFICE
☒ CONTRACT OFFICE

STATE OF NORTH CAROLINA DEPARTMENT OF TRANSPORTATION RALEIGH

RETAINING WALLS NO.1 AND 3 MSE WALL DETAILS

REVISIONS						SHEET NO.
NO.	BY	DATE	NO.	BY	DATE	W-5
1			3			TOTAL SHEETS
2			4			9

GEOTECHNICAL ENGINEER	ENGINEER
NORTH CAROLINA PROFESSIONAL SEAL 027869 ENGINEER DAVID L. TEAGUE David L. Teague 7/15/13 SIGNATURE DATE	SIGNATURE DATE

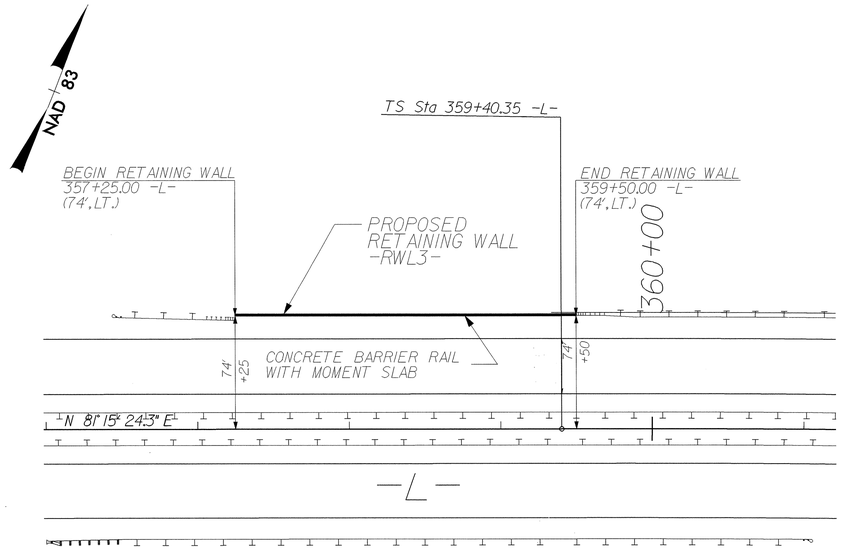

MSE RETAINING WALL NO.3 PLAN VIEW

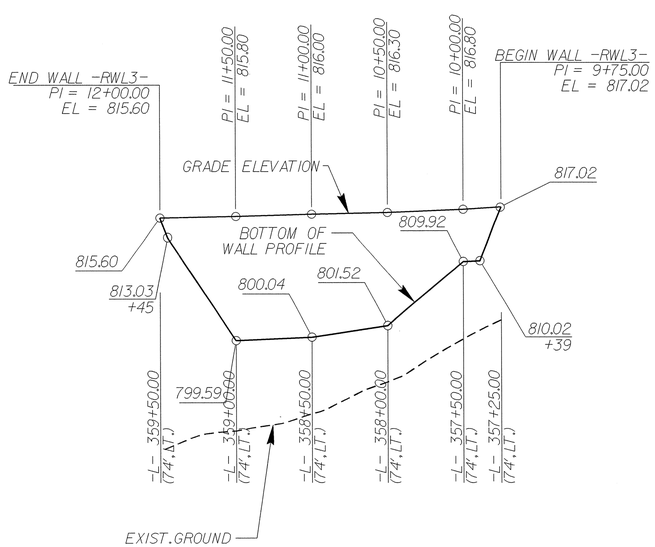

MSE RETAINING WALL NO.3 WALL ENVELOPE - FRONT FACE

NOTES:

FOR MECHANICALLY STABILIZED EARTH (MSE) RETAINING WALLS, SEE MECHANICALLY STABILIZED EARTH RETAINING WALLS PROVISION.

A CONCRETE BARRIER RAIL WITH MOMENT SLAB IS REQUIRED ABOVE RETAINING WALL NO. 3. SEE PLANS FOR CONCRETE BARRIER RAIL WITH MOMENT SLAB DETAILS.

USE AN MSE WALL SYSTEM WITH PRECAST CONCRETE PANELS THAT MEET SECTION 1077 OF THE STANDARD SPECIFICATIONS FOR RETAINING WALL NO. 3.

A DRAIN IS REQUIRED FOR RETAINING WALL NO. 3.

BEFORE BEGINNING MSE WALL DESIGN FOR RETAINING WALL NO. 3, SURVEY WALL LOCATION AND SUBMIT A REVISED WALL PROFILE VIEW (WALL ENVELOPE) FOR REVIEW. DO NOT START WALL DESIGN OR CONSTRUCTION UNTIL THE REVISED WALL ENVELOPE IS ACCEPTED.

DESIGN RETAINING WALL NO. 1 FOR THE FOLLOWING:
1) H = DESIGN HEIGHT + EMBEDMENT
2) DESIGN LIFE = 100 YEARS
3) MAXIMUM FACTORED VERTICAL STRESS ON FOUNDATION MATERIAL = 3,700 LB/SF
4) MINIMUM REINFORCEMENT RATIO (L:H) = 0.75
5) AGGREGATE PARAMETERS:

AGGREGATE TYPE*	UNIT WEIGHT (γ) LB/CF	FRICTION ANGLE (ϕ) DEGREES	COHESION (c) LB/SF
COARSE	110	38	0
*SEE MSE RETAINING WALLS PROVISION FOR COARSE AGGREGATE MATERIAL REQUIREMENTS.			

6) IN-SITU ASSUMED MATERIAL PARAMETERS:

MATERIAL TYPE	UNIT WEIGHT (γ) LB/CF	FRICTION ANGLE (ϕ) DEGREES	COHESION (c) LB/SF
BACKFILL	120	30	0
FOUNDATION	120	30	0

DESIGN RETAINING WALL NO. 3 FOR A LIVE LOAD (TRAFFIC) SURCHARGE.

DO NOT PLACE LEVELING PAD CONCRETE, AGGREGATE OR REINFORCEMENT FOR RETAINING WALL NO. 3 UNTIL EXCAVATION DIMENSIONS AND FOUNDATION MATERIAL ARE APPROVED.

ESTIMATED MSE WALL QUANTITIES (SQUARE FEET)	
MSE RETAINING WALL NO. 3	2,700 SF

PROJECT NO.: U-2524C (34820JJ)
GUILFORD **COUNTY**
STATION: 357+25 -L- TO 359+50 -L-
SHEET 1 OF 2

PREPARED BY:	D.TEAGUE	DATE: 7/13
REVIEWED BY:	M.MULLA	DATE: 7/13

GEOTECHNICAL ENGINEERING UNIT
☐ EASTERN REGIONAL OFFICE
☐ WESTERN REGIONAL OFFICE
☒ CONTRACT OFFICE
STATE OF NORTH CAROLINA
DEPARTMENT OF TRANSPORTATION
RALEIGH

RETAINING WALL NO.3
MSE WALL
WALL ENVELOPE AND PLAN VIEW

REVISIONS						SHEET NO.
NO.	BY	DATE	NO.	BY	DATE	W-6
1			3			TOTAL SHEETS
2			4			9

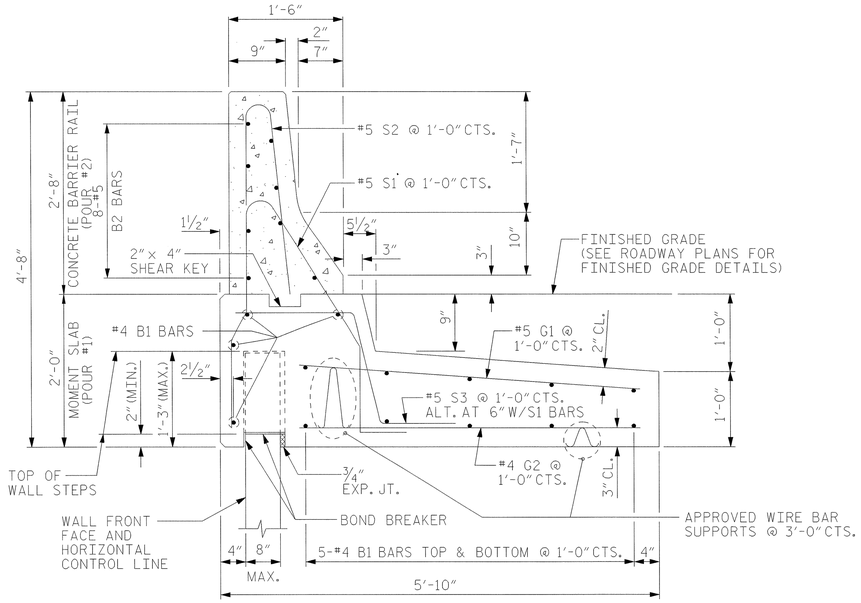

CONCRETE BARRIER RAIL WITH MOMENT SLAB

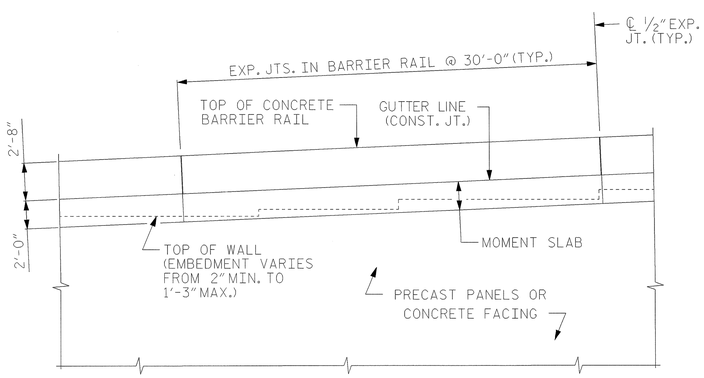

CONCRETE BARRIER RAIL WITH MOMENT SLAB - PARTIAL ELEVATION

NOTES:

FOR CONCRETE BARRIER RAIL WITH MOMENT SLAB, SEE CONCRETE BARRIER RAIL WITH MOMENT SLAB PROVISION.

CONCRETE BARRIER RAIL WITH MOMENT SLAB SHALL BE A MINIMUM OF 15' IN LENGTH.

EXPANSION JOINTS SHALL BE PLACED IN THE BARRIER RAIL AND MOMENT SLAB AT A MAXIMUM SPACING OF 30'.

GROOVED CONTRACTION JOINTS, 1/2" IN DEPTH, SHALL BE TOOLED IN ALL EXPOSED SURFACES OF THE BARRIER RAIL AND IN ACCORDANCE WITH ARTICLE 825-10(B) OF THE STANDARD SPECIFICATIONS. A CONTRACTION JOINT SHALL BE LOCATED AT EACH THIRD POINT BETWEEN BARRIER RAIL EXPANSION JOINTS. ONLY ONE CONTRACTION JOINT IS REQUIRED AT MID-POINT OF BARRIER RAIL SEGMENTS LESS THAN 20' IN LENGTH.

THE BARRIER RAIL SHALL NOT BE CAST UNTIL THE MOMENT SLAB HAS ATTAINED AN AGE OF THREE CURING DAYS OR A MINIMUM COMPRESSIVE STRENGTH OF 2,000 PSI. IN ADDITION, NO FILL MATERIAL, ASPHALT, OR CONSTRUCTION EQUIPMENT IS ALLOWED ON THE MOMENT SLAB PRIOR TO SATISFYING THE MINIMUM CONCRETE CURING AND STRENGTH REQUIREMENTS.

ALL REINFORCING STEEL IN THE BARRIER RAIL SHALL BE EPOXY COATED.

IF EXISTING OR FUTURE OBSTRUCTIONS SUCH AS FOUNDATIONS, BARRIERS, PIPES, INLETS OR UTILITIES WILL INTERFERE WITH CONCRETE BARRIER RAIL WITH MOMENT SLAB OR CONCRETE FACING FOR RETAINING WALL WILL BE THICKER THAN 8", CONCRETE BARRIER RAIL WITH MOMENT SLAB DETAILS SHALL BE REVISED AND SUBMITTED FOR APPROVAL.

CONCRETE BARRIER RAIL WITH MOMENT SLAB
PAY LENGTH = 500 LIN FT

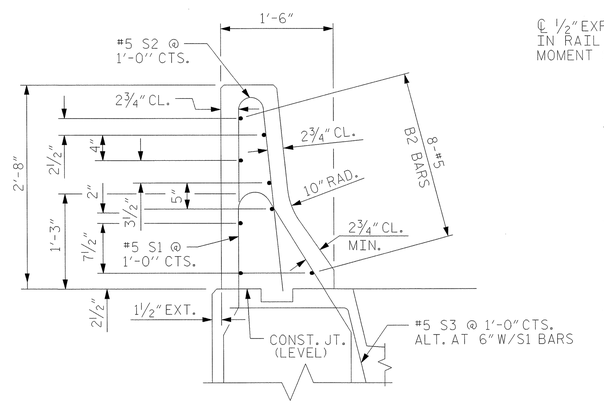

SECTION THRU RAIL

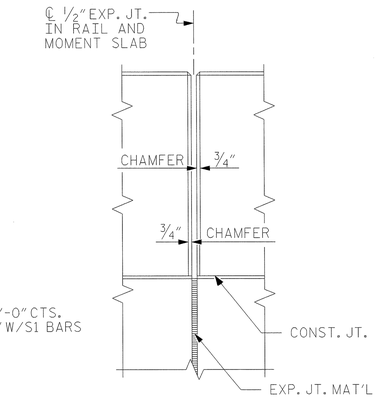

ELEV. @ EXP. JOINTS

BARRIER RAIL DETAILS

GEOTECHNICAL ENGINEER

SIGNATURE DATE

ENGINEER

NORTH CAROLINA PROFESSIONAL SEAL 30878 ENGINEER KEVIN FISCHER

7/15/13

SIGNATURE DATE

BAR TYPES

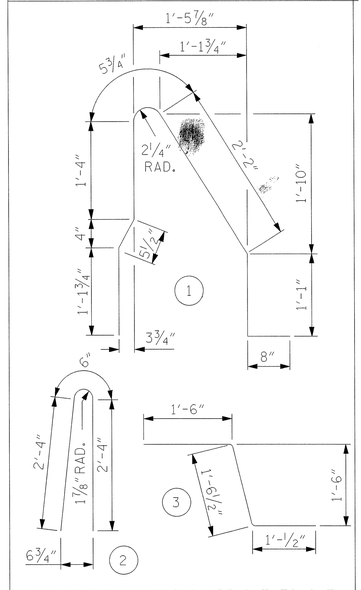

ALL BAR DIMENSIONS ARE OUT TO OUT

BILL OF MATERIAL

FOR ONE 30'-0" SECTION OF CONCRETE BARRIER RAIL WITH MOMENT SLAB

BAR	NO.	SIZE	TYPE	LENGTH	WEIGHT
B1	14	#4	STR	29'-7"	277
* B2	8	#5	STR	29'-7"	247
G1	31	#5	STR	4'-4"	140
G2	31	#4	STR	4'-4"	90
* S1	31	#5	1	7'-3"	234
* S2	31	#5	2	5'-2"	167
S3	30	#5	3	4'-1"	128
REINFORCING STEEL					635 LB
* EPOXY COATED REINFORCING STEEL					648 LB
CLASS AA CONCRETE BARRIER RAIL					3.1 CY
CLASS A CONCRETE MOMENT SLAB					9.1 CY
CONCRETE BARRIER RAIL WITH MOMENT SLAB					30 LIN FT

PROJECT NO.: U-2524C (34820.1.1)

GUILFORD **COUNTY**

STATION: 319+00 -L- TO 321+75 -L- AND 357+25 -L- TO 359+50 -L-

SHEET 1 OF 1

GEOTECHNICAL ENGINEERING UNIT

☐ EASTERN REGIONAL OFFICE

☐ WESTERN REGIONAL OFFICE

☒ CONTRACT OFFICE

STATE OF NORTH CAROLINA DEPARTMENT OF TRANSPORTATION RALEIGH

CONCRETE BARRIER RAIL WITH MOMENT SLAB FOR PRECAST PANELS AND CONCRETE FACING

REVISIONS							SHEET NO.
NO.	BY	DATE	NO.	BY	DATE		W-7
1			3				TOTAL SHEETS
2			4				9

PREPARED BY:	DATE:
REVIEWED BY:	DATE:

GEOTECHNICAL ENGINEER	ENGINEER
NORTH CAROLINA PROFESSIONAL SEAL 027869 ENGINEER DAVID L. TEAGUE	
SIGNATURE / DATE: 7/15/13	SIGNATURE / DATE

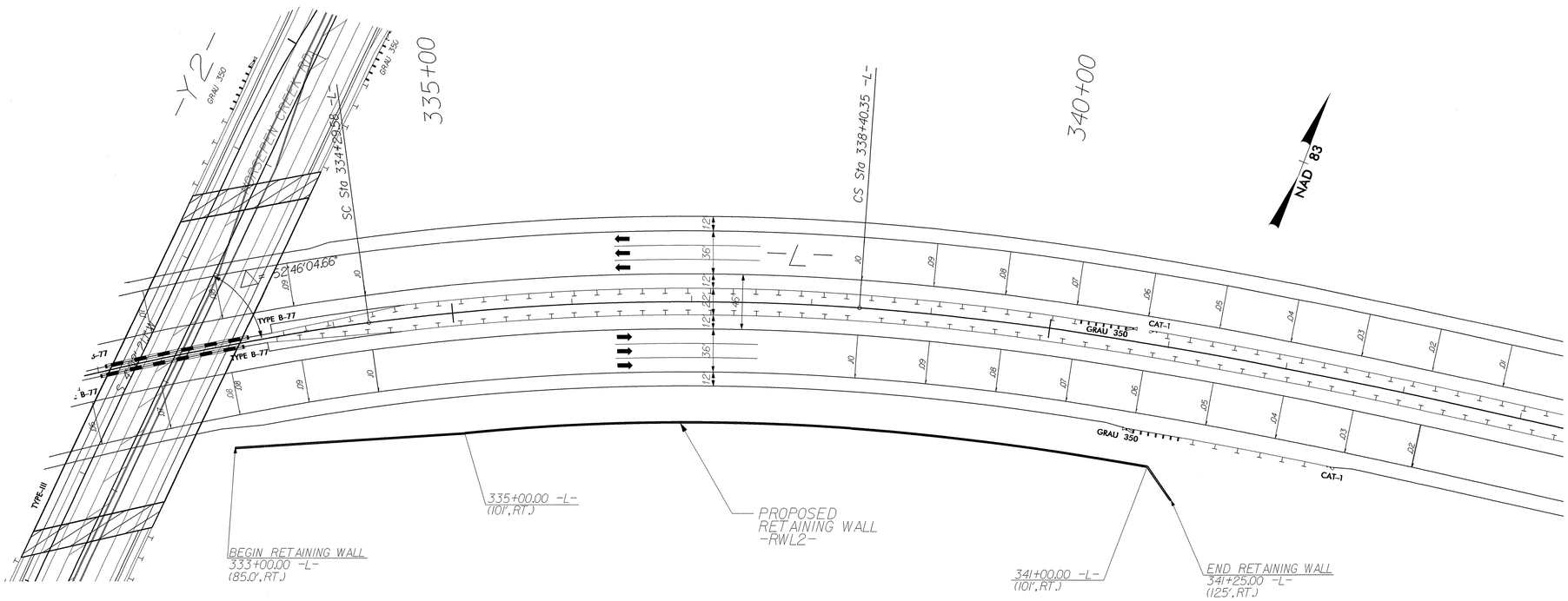

RETAINING WALL NO.2 PLAN VIEW

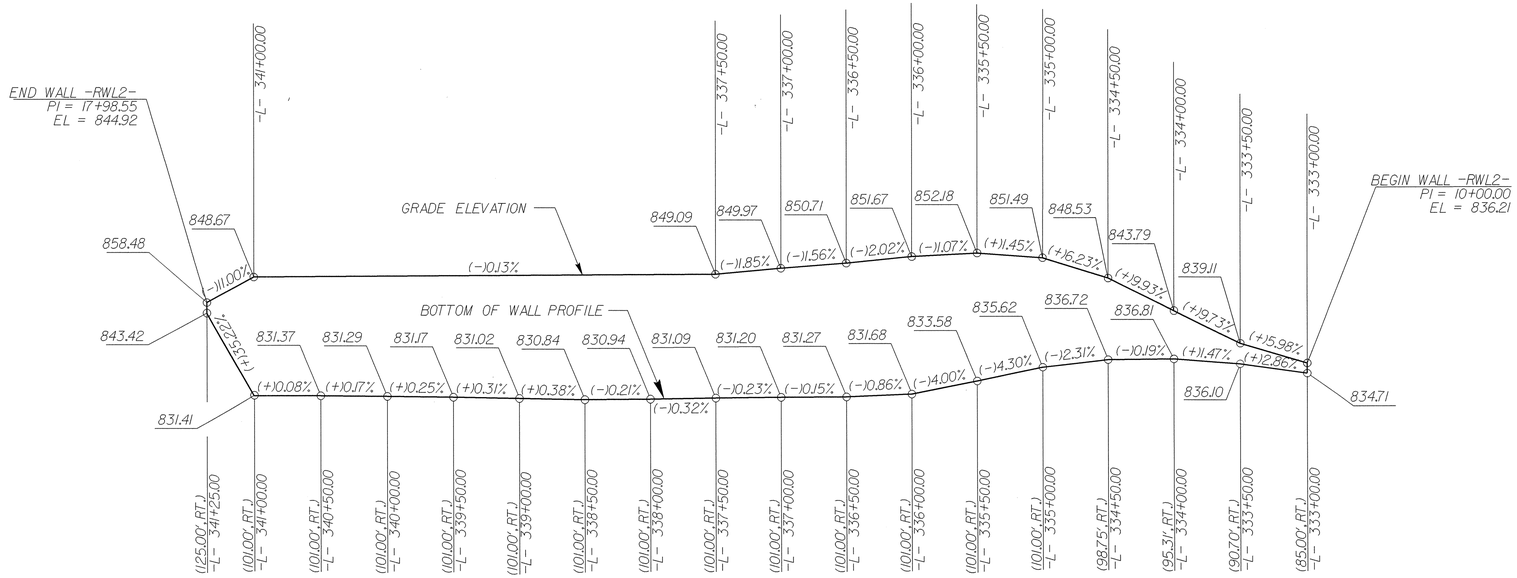

RETAINING WALL NO.2 WALL ENVELOPE - FRONT FACE

PROJECT NO.: U-2524C (34820.1.1)

GUILFORD **COUNTY**

STATION: 333+00 -L- TO 341+25 -L-

SHEET 1 OF 2

PREPARED BY:	D.TEAGUE	DATE: 7/13
REVIEWED BY:	M.MULLA	DATE: 7/13

GEOTECHNICAL ENGINEERING UNIT

☐ EASTERN REGIONAL OFFICE

☐ WESTERN REGIONAL OFFICE

☒ CONTRACT OFFICE

STATE OF NORTH CAROLINA
DEPARTMENT OF TRANSPORTATION
RALEIGH

RETAINING WALL NO.2
SOIL NAIL WALL
WALL ENVELOPE AND PLAN VIEW

REVISIONS							SHEET NO.
NO.	BY	DATE	NO.	BY	DATE		W-8
1			3				TOTAL SHEETS
2			4				9

GEOTECHNICAL ENGINEER	ENGINEER
NORTH CAROLINA PROFESSIONAL SEAL 027869 ENGINEER DAVID L. TEAGUE	
D. L. Teague 7/15/13	
SIGNATURE DATE	SIGNATURE DATE

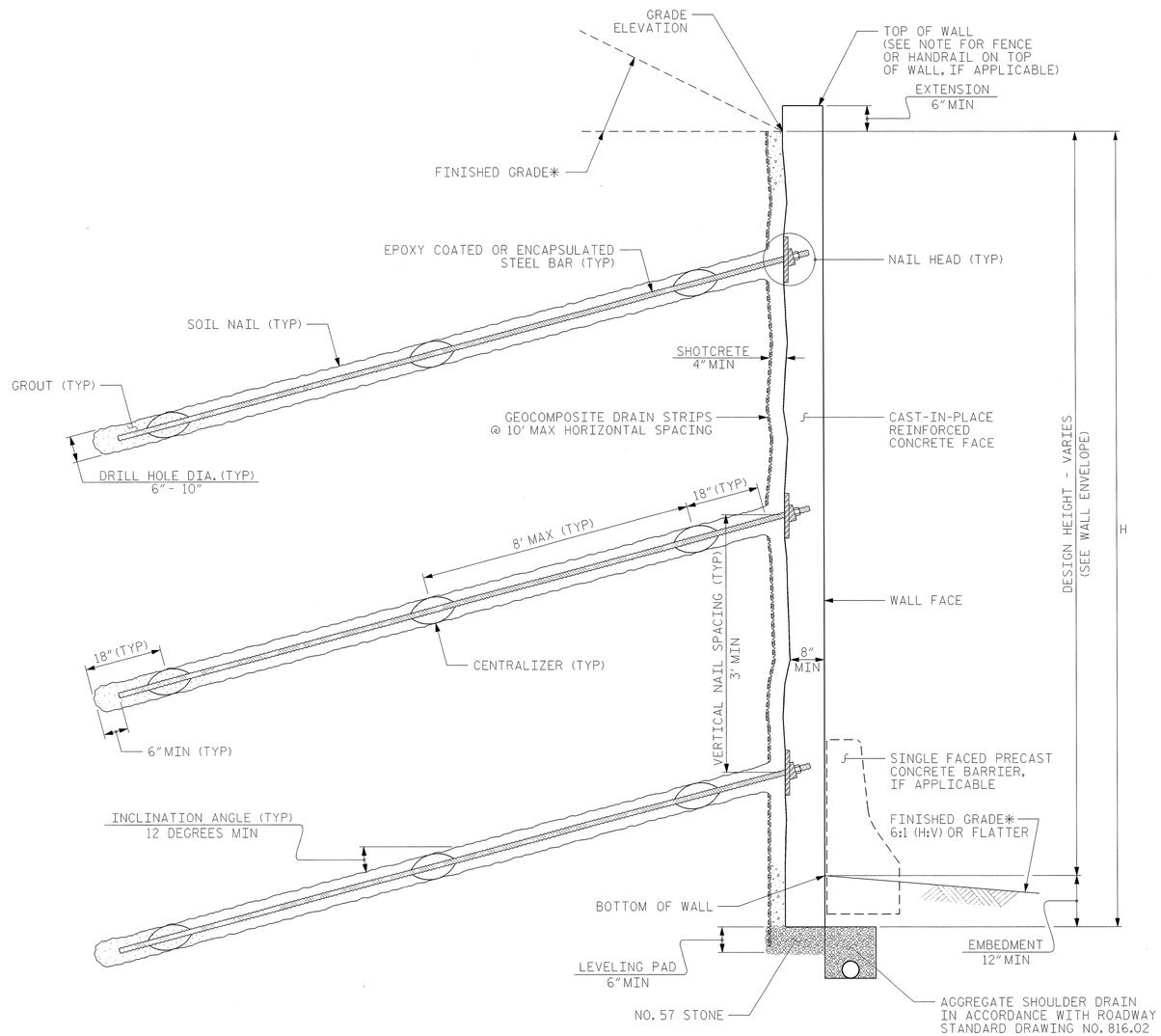

SOIL NAIL WALL - TYPICAL SECTION

*SEE ROADWAY PLANS FOR FINISHED GRADE AND DITCH DETAILS.

NOTES:

FOR SOIL NAIL RETAINING WALLS, SEE SOIL NAIL RETAINING WALLS PROVISION.

BEFORE BEGINNING SOIL NAIL WALL DESIGN FOR RETAINING WALL NO. 2, SURVEY WALL LOCATION AND SUBMIT A REVISED WALL PROFILE VIEW (WALL ENVELOPE) FOR REVIEW. DO NOT START WALL DESIGN OR CONSTRUCTION UNTIL THE REVISED WALL ENVELOPE IS ACCEPTED.

DESIGN RETAINING WALL NO. 2 FOR THE FOLLOWING:
1) H = DESIGN HEIGHT + EMBEDMENT
2) DESIGN LIFE = 100 YEARS
4) IN-SITU ASSUMED MATERIAL PARAMETERS:
UNIT WEIGHT, γ = 120 LB/CF
FRICTION ANGLE, ϕ = 32 DEGREES
COHESION, c = 0 LB/SF

A 4 FOOT MINIMUM BENCH IS REQUIRED IN FRONT OF RETAINING WALL 2. WALL ENVELOPE MAY BE ADJUSTED TO ACHIEVE THIS BENCH.

ESTIMATED SOIL NAIL WALL QUANTITIES

RETAINING WALL NO.	SOIL NAIL RETAINING WALLS (SQUARE FEET)	SOIL NAIL VERIFICATION TESTS	SOIL NAIL PROOF TESTS
2	12,700	2	25

PROJECT NO.: U-2524C (34820.1.1)
GUILFORD **COUNTY**
STATION: 333+00 -L- TO 341+25 -L-
SHEET 2 OF 2

PREPARED BY: D. TEAGUE	DATE: 7/13
REVIEWED BY: M. MULLA	DATE: 7/13

GEOTECHNICAL ENGINEERING UNIT
☐ EASTERN REGIONAL OFFICE
☐ WESTERN REGIONAL OFFICE
☒ CONTRACT OFFICE
STATE OF NORTH CAROLINA DEPARTMENT OF TRANSPORTATION RALEIGH

RETAINING WALL NO. 2
SOIL NAIL WALL
WALL DETAILS AND NOTES

REVISIONS						SHEET NO.
NO.	BY	DATE	NO.	BY	DATE	6-9
1			3			TOTAL SHEETS
2			4			9

STANDARD NOTES

DESIGN DATA:

SPECIFICATIONS	A.A.S.H.T.O. (CURRENT)
LIVE LOAD	SEE PLANS
IMPACT ALLOWANCE	SEE A.A.S.H.T.O.
STRESS IN EXTREME FIBER OF	
STRUCTURAL STEEL - AASHTO M270 GRADE 36	20,000 LBS. PER SQ. IN.
- AASHTO M270 GRADE 50W	27,000 LBS. PER SQ. IN.
- AASHTO M270 GRADE 50	27,000 LBS. PER SQ. IN.
REINFORCING STEEL IN TENSION	
GRADE 60	24,000 LBS. PER SQ. IN.
CONCRETE IN COMPRESSION	1,200 LBS. PER SQ. IN.
CONCRETE IN SHEAR	SEE A.A.S.H.T.O.
STRUCTURAL TIMBER - TREATED OR	
UNTREATED - EXTREME FIBER STRESS	1,800 LBS. PER SQ. IN.
COMPRESSION PERPENDICULAR TO GRAIN OF TIMBER	375 LBS. PER SQ. IN.
EQUIVALENT FLUID PRESSURE OF EARTH	30 LBS. PER CU. FT. (MINIMUM)

MATERIAL AND WORKMANSHIP:

EXCEPT AS MAY OTHERWISE BE SPECIFIED ON PLANS OR IN THE SPECIAL PROVISIONS, ALL MATERIAL AND WORKMANSHIP SHALL BE IN ACCORDANCE WITH THE 2012 "STANDARD SPECIFICATIONS FOR ROADS AND STRUCTURES" OF THE N. C. DEPARTMENT OF TRANSPORTATION.

STEEL SHEET PILING FOR PERMANENT OR TEMPORARY APPLICATIONS SHALL BE HOT ROLLED.

CONCRETE:

UNLESS OTHERWISE REQUIRED ON PLANS, CLASS A CONCRETE SHALL BE USED FOR ALL PORTIONS OF ALL STRUCTURES WITH THE EXCEPTION THAT: CLASS AA CONCRETE SHALL BE USED IN BRIDGE SUPERSTRUCTURES, ABUTMENT BACKWALLS, AND APPROACH SLABS; AND CLASS B CONCRETE SHALL BE USED FOR SLOPE PROTECTION AND RIP RAP.

CONCRETE CHAMFERS:

UNLESS OTHERWISE NOTED ON THE PLANS, ALL EXPOSED CORNERS ON STRUCTURES SHALL BE CHAMFERED 3/4" WITH THE FOLLOWING EXCEPTIONS: TOP CORNERS OF CURBS MAY BE ROUNDED TO 1-1/2" RADIUS WHICH IS BUILT INTO CURB FORMS; CORNERS OF TRANSVERSE FLOOR EXPANSION JOINTS SHALL BE ROUNDED WITH A 1/4" FINISHING TOOL UNLESS OTHERWISE REQUIRED ON PLANS; AND CORNERS OF EXPANSION JOINTS IN THE ROADWAY FACES AND TOPS OF CURBS AND SIDEWALKS SHALL BE ROUNDED TO A 1/4" RADIUS WITH A FINISHING STONE OR TOOL UNLESS OTHERWISE REQUIRED ON PLANS.

DOWELS:

DOWELS WHEN INDICATED ON PLANS AS FOR CULVERT EXTENSIONS, SHALL BE EMBEDDED AT LEAST 12" INTO THE OLD CONCRETE AND GROUTED INTO PLACE WITH 1:2 CEMENT MORTAR.

ALLOWANCE FOR DEAD LOAD DEFLECTION, SETTLEMENT, ETC. IN CASTING SUPERSTRUCTURES:

BRIDGES SHALL BE BUILT ON THE GRADE OR VERTICAL CURVE SHOWN ON PLANS. SLABS, CURBS AND PARAPETS SHALL CONFORM TO THE GRADE OR CURVE.

ALL DIMENSIONS WHICH ARE GIVEN IN SECTION AND ARE AFFECTED BY DEAD LOAD DEFLECTIONS ARE DIMENSIONS AT CENTER LINE OF BEARING UNLESS OTHERWISE NOTED ON PLANS. IN SETTING FORMS FOR STEEL BEAM BRIDGES AND PRESTRESSED CONCRETE GIRDER BRIDGES, ADJUSTMENTS SHALL BE MADE DUE TO THE DEAD LOAD DEFLECTIONS FOR THE ELEVATIONS SHOWN. WHERE BLOCKS ARE SHOWN OVER BEAMS FOR BUILDING UP TO THE SLAB, THE VERTICAL DIMENSIONS OF THE BLOCKS SHALL BE ADJUSTED BETWEEN BEARINGS TO COMPENSATE FOR DEAD LOAD DEFLECTIONS, VERTICAL CURVE ORDINATE, AND ACTUAL BEAM CAMBER. WHERE BOTTOM OF SLAB IS IN LINE WITH BOTTOM OF TOP FLANGES, DEPTH OF SLAB BETWEEN BEARINGS SHALL BE ADJUSTED TO COMPENSATE FOR DEAD LOAD DEFLECTION, VERTICAL CURVE ORDINATE, AND ACTUAL BEAM CAMBER.

IN SETTING FALSEWORK AND FORMS FOR REINFORCED CONCRETE SPANS, AN ALLOWANCE SHALL BE MADE FOR DEAD LOAD DEFLECTIONS, SETTLEMENT OF FALSEWORK, AND PERMANENT CAMBER WHICH SHALL BE PROVIDED FOR IN ADDITION TO THE ELEVATIONS SHOWN. AFTER REMOVAL OF THE FALSEWORK, THE FINISHED STRUCTURES SHALL CONFORM TO THE PROFILE AND ELEVATIONS SHOWN ON THE PLANS AND CONSTRUCTION ELEVATIONS FURNISHED BY THE ENGINEER.

DETAILED DRAWINGS FOR FALSEWORK OR FORMS FOR BRIDGE SUPERSTRUCTURE AND ANY STRUCTURE OR PARTS OF A STRUCTURE AS NOTED ON THE PLANS SHALL BE SUBMITTED TO THE ENGINEER FOR APPROVAL BEFORE CONSTRUCTION OF THE FALSEWORK OR FORMS IS STARTED.

REINFORCING STEEL:

ALL REINFORCING STEEL SHALL BE DEFORMED. DIMENSIONS RELATIVE TO PLACEMENT OF REINFORCING ARE TO CENTERS OF BARS UNLESS OTHERWISE INDICATED IN THE PLANS. DIMENSIONS ON BAR DETAILS ARE TO CENTERS OF BARS OR ARE OUT TO OUT AS INDICATED ON PLANS.

WIRE BAR SUPPORTS SHALL BE PROVIDED FOR REINFORCING STEEL WHERE INDICATED ON THE PLANS. WHEN BAR SUPPORT PIECES ARE PLACED IN CONTINUOUS LINES, THEY SHALL BE SO PLACED THAT THE ENDS OF THE SUPPORTING WIRES SHALL BE LAPPED TO LOCK LEGS ON ADJOINING PIECES.

STRUCTURAL STEEL:

AT THE CONTRACTOR'S OPTION, HE MAY SUBSTITUTE 7/8" Ø SHEAR STUDS FOR THE 3/4" Ø STUDS SPECIFIED ON THE PLANS. THIS SUBSTITUTION SHALL BE MADE AT THE RATE OF 3 - 7/8" Ø STUDS FOR 4 - 3/4" Ø STUDS, AND STUD SPACING CHANGES SHALL BE MADE AS NECESSARY TO PROVIDE THE SAME EQUIVALENT NUMBER OF 7/8" Ø STUDS ALONG THE BEAM AS SHOWN FOR 3/4" Ø STUDS BASED ON THE RATIO OF 3 - 7/8" Ø STUDS FOR 4 - 3/4" Ø STUDS. STUDS OF THE LENGTH SPECIFIED ON THE PLANS MUST BE PROVIDED. THE MAXIMUM SPACING SHALL BE 2'-0".

EXCEPT AT THE INTERIOR SUPPORTS OF CONTINUOUS BEAMS WHERE THE COVER PLATE IS IN CONTACT WITH BEARING PLATE, THE CONTRACTOR MAY, AT HIS OPTION, SUBSTITUTE FOR THE COVER PLATES DESIGNATED ON THE PLANS COVER PLATES OF THE EQUIVALENT AREA PROVIDED THESE PLATES ARE AT LEAST 5/16" IN THICKNESS AND DO NOT EXCEED A WIDTH EQUAL TO THE FLANGE WIDTH LESS 2" OR A THICKNESS EQUAL TO 2 TIMES THE FLANGE THICKNESS. THE SIZE OF FILLET WELDS SHALL CONFORM TO THE REQUIREMENTS OF THE CURRENT ANSI/AASHTO/AWS "BRIDGE WELDING CODE". ELECTROSLAG WELDING WILL NOT BE PERMITTED.

WITH THE SOLE EXCEPTION OF EDGES AT SURFACES WHICH BEAR ON OTHER SURFACES, ALL SHARP EDGES AND ENDS OF SHAPES AND PLATES SHALL BE SLIGHTLY ROUNDED BY SUITABLE MEANS TO A RADIUS OF APPROXIMATELY 1/16 INCH OR EQUIVALENT FLAT SURFACE AT A SUITABLE ANGLE PRIOR TO PAINTING, GALVANIZING, OR METALLIZING.

HANDRAILS AND POSTS:

METAL STANDARDS AND FACES OF THE CONCRETE END POSTS FOR THE METAL RAIL SHALL BE SET NORMAL TO THE GRADE OF THE CURB, UNLESS OTHERWISE SHOWN ON PLANS. THE METAL RAIL AND TOPS OF CONCRETE POSTS USED WITH THE ALUMINUM RAIL SHALL BE BUILT PARALLEL TO THE GRADE OF THE CURB.

METAL HANDRAILS SHALL BE IN ACCORDANCE WITH THE PLANS. RAILS SHALL BE AS MANUFACTURED FOR BRIDGE RAILING. CASTINGS SHALL BE OF A UNIFORM APPEARANCE. FINS AND OTHER DEFORMATIONS RESULTING FROM CASTING OR OTHERWISE SHALL BE REMOVED IN A MANNER SO THAT A UNIFORM COLORING OF THE COMPLETED CASTING SHALL BE OBTAINED. CASTINGS WITH DISCOLORATIONS OR OF NON-UNIFORM COLORING WILL NOT BE ACCEPTED. CERTIFIED MILL REPORTS ARE REQUIRED FOR METAL RAILS AND POSTS.

SPECIAL NOTES:

GENERALLY, IN CASE OF DISCREPANCY, THIS STANDARD SHEET OF NOTES SHALL GOVERN OVER THE SPECIFICATIONS, BUT THE REMAINDER OF THE PLANS SHALL GOVERN OVER NOTES HEREON, AND SPECIAL PROVISIONS SHALL GOVERN OVER ALL. SEE SPECIFICATIONS ARTICLE 105-4.

ENGLISH

JANUARY, 1990