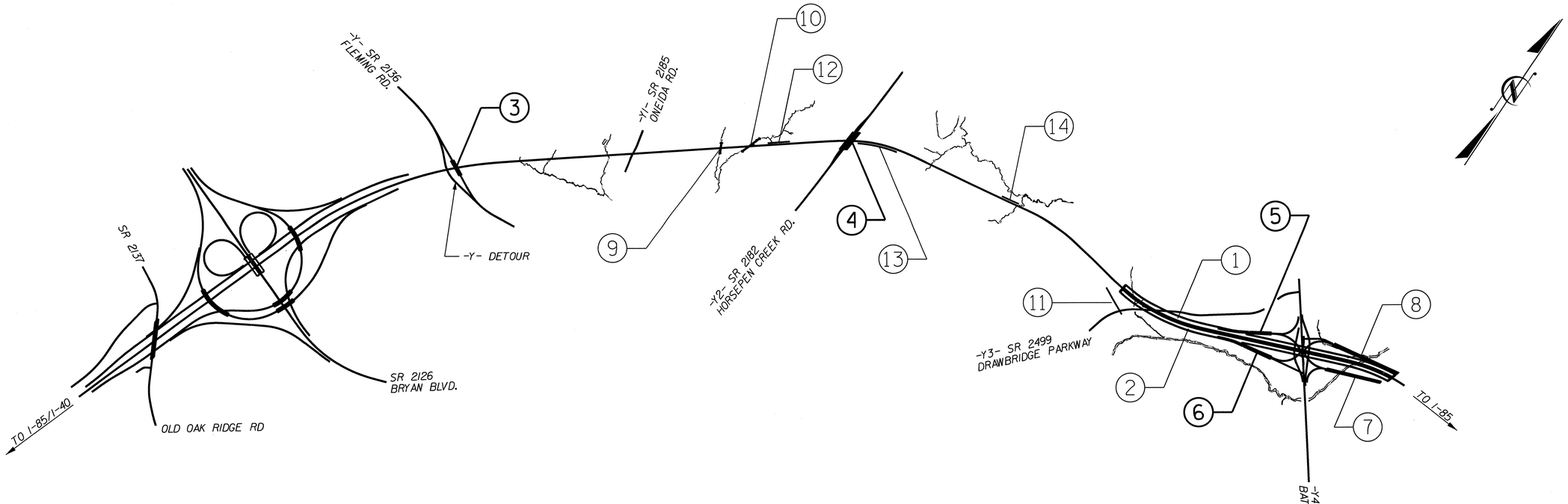

INDEX			
STR.	STATION	DESCRIPTION	SHEETS
1	407+73.35 -L- (LT)	BRIDGE ON I-840 OVER BATTLEGROUND AVE. (LEFT LANE)	S-1 THRU S-247
2	407+85.82 -L- (RT)	BRIDGE ON I-840 OVER BATTLEGROUND AVE. (RIGHT LANE)	S-248 THRU S-498
3	**274+26.98 -L-**	**BRIDGE ON SR 2136 (FLEMING RD.) OVER GWL**	**S-499 THRU S-535**
4	**332+65.40 -L-**	**BRIDGE ON SR 2182 (HORSEPEN CREEK RD.) OVER GWL**	**S-536 THRU S-585**
5	**6+01.72 -RPBY4-**	**BRIDGE ON RAMP B OVER WETLANDS**	**S-586 THRU S-628**
6	**6+23.25 -RPCY4-**	**BRIDGE ON RAMP C OVER WETLANDS**	**S-629 THRU S-673**
7	9+53.33 -RPAY4-	BRIDGE ON RAMP A OVER HORSEPEN CREEK	S-674 THRU S-758
8	9+75.28 -RPDY4-	BRIDGE ON RAMP D OVER HORSEPEN CREEK	S-759 THRU S-836
9	313+42.00 -L-	SINGLE 10 X 7 CONCRETE BOX CULVERT	C-1 THRU C-8
10	317+05.00 -L-	SINGLE 10 X 6 CONCRETE BOX CULVERT	C-9 THRU C-16
11	373+29.30 -L-	SOUND BARRIER WALL	W-1 THRU W-3
12	319+00 -L-	MSE RETAINING WALL	W-4 THRU W-9
13	333+00 -L-	SOIL NAIL WALL	
14	357+25 -L-	MSE RETAINING WALL	

PART 1
PART 2
PART 3
PART 4

PART 3 OF 4

PROJECT NO. U-2524C
GUILFORD COUNTY
STATION:

STATE OF NORTH CAROLINA
DEPARTMENT OF TRANSPORTATION
RALEIGH

INDEX

REVISIONS						
NO.	BY:	DATE:	NO.	BY:	DATE:	
1			3			
2			4			

DRAWN BY : W.D. CRUTCHER DATE : 6-13-13
CHECKED BY : D.S. STUTTS DATE : 6-21-13

12-JUL-2013 11:30
S:\PEF\Darrell\u2524c_title_index.dgn
dcrutcher

F.A. PROJECT NO. NHF-0708(52)

SPAN A / SPAN B

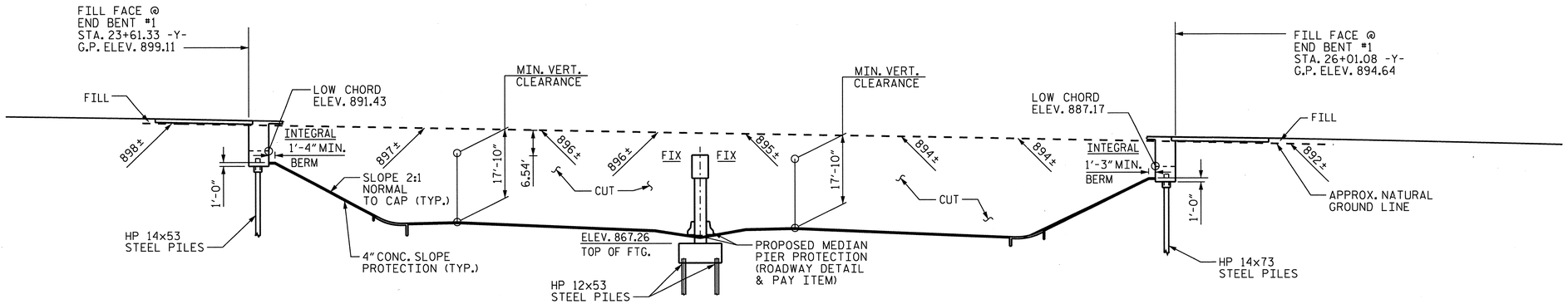

END BENT No. 1 — BENT No. 1 — END BENT No. 2

SECTION ALONG ℄ SURVEY -Y-

(BENTS ON SECTION AT RIGHT ANGLES TO BENTS)

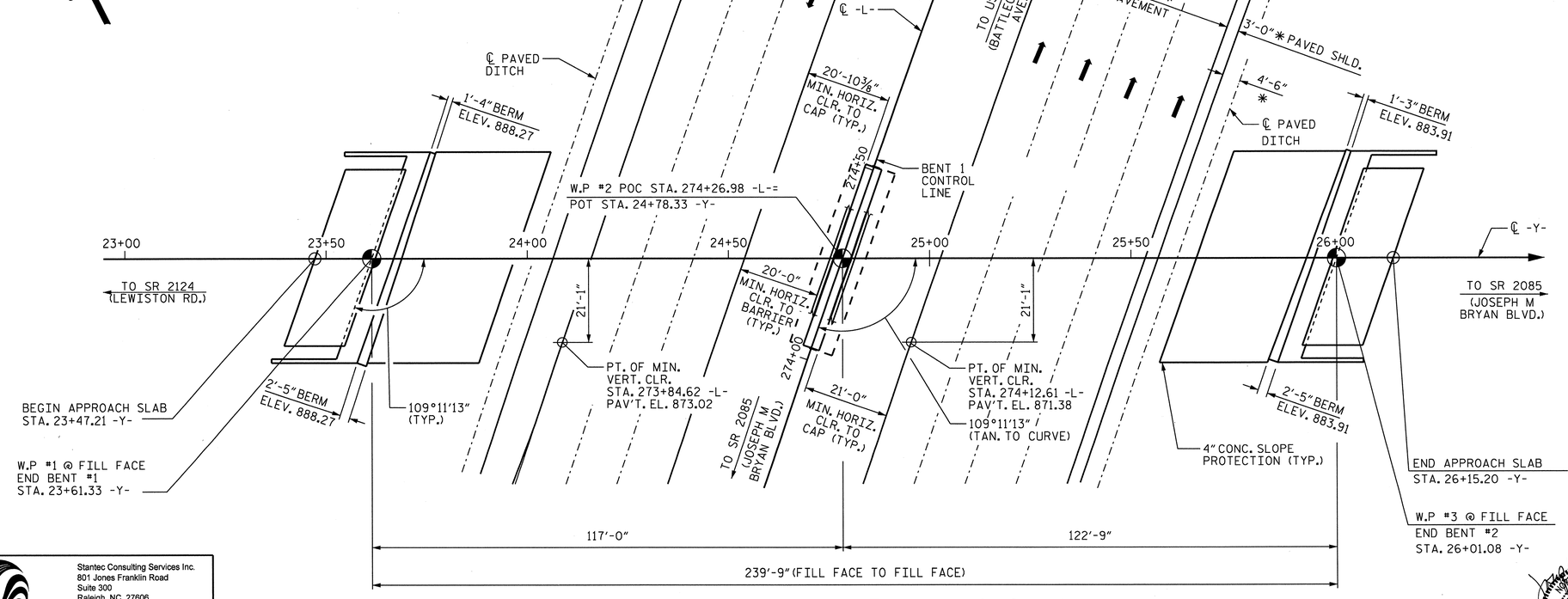

PLAN ALONG -Y-

PILES NOT SHOWN IN PLAN VIEW

* RADIAL DIMENSIONS

-L-

PI STA 264+72.96
Δ = 28° 41' 59.3"(RT)
D = 0° 59' 52.6"
L = 2,875.93'
T = 1,468.81'
R = 5,741.46'

HORIZONTAL CURVE DATA

- 1.8629% — - 2.8867%

P.I. STA. = 26+50.00 -Y-
ELEV. = 893.73
V.C. = 50.00'

GRADE DATA ℄ SURVEY -Y-

NAD 83

PROJECT NO. U-2524C

GUILFORD COUNTY

STATION: 274+26.98 -L-

SHEET 1 OF 3 BRIDGE NO. 1125

STATE OF NORTH CAROLINA
DEPARTMENT OF TRANSPORTATION
RALEIGH

GENERAL DRAWING

FOR BRIDGE ON SR 2136
OVER GREENSBORO WESTERN LOOP
BETWEEN SR 2124 AND SR 2085

REVISIONS						SHEET NO.
NO.	BY:	DATE:	NO.	BY:	DATE:	S-499
1			3			TOTAL SHEETS
2			4			836

Stantec
Stantec Consulting Services Inc.
801 Jones Franklin Road
Suite 300
Raleigh, NC 27606
Tel. (919) 851-6866
Fax. (919) 851-7024
www.stantec.com
License No. F-0672

DRAWN BY : V. T. DOAN DATE : 05-25-12
CHECKED BY : J. T. KELVINGTON DATE : 06-15-12
DESIGN ENGINEER OF RECORD: J. T. KELVINGTON DATE : 03-28-13

NORTH CAROLINA PROFESSIONAL SEAL 13406 ENGINEER JOSEPH T. KELVINGTON 3/28/13

U:\Structures\Y Fleming Rd\Drawing\Final\U-2524C_SD_GD.dgn 6/7/2013 2:25:05 PM jgelle STRUCTURES PEN TABLE.tbl Raleigh PDF Creator (Full).plt

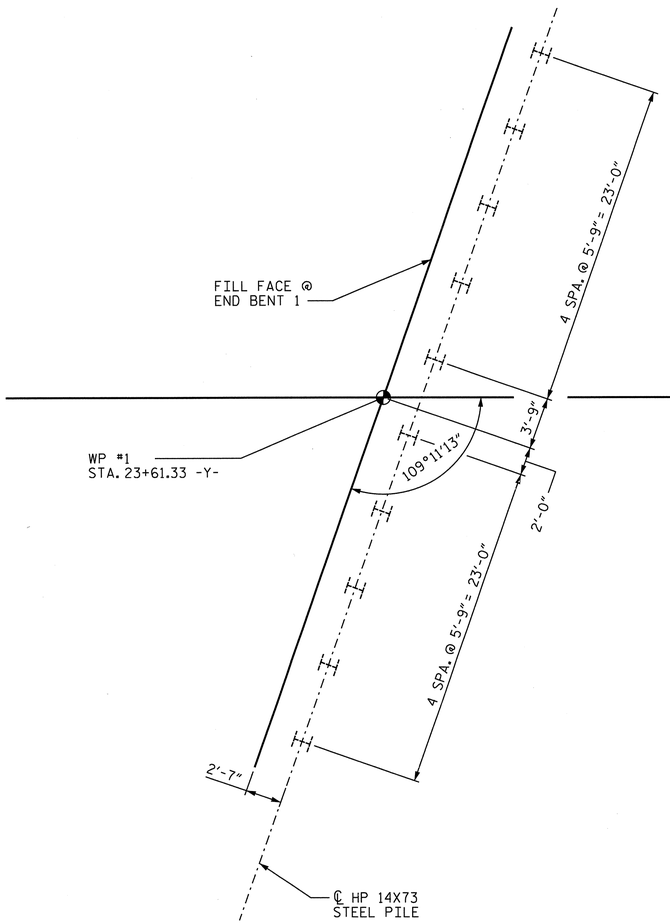

END BENT NO. 1

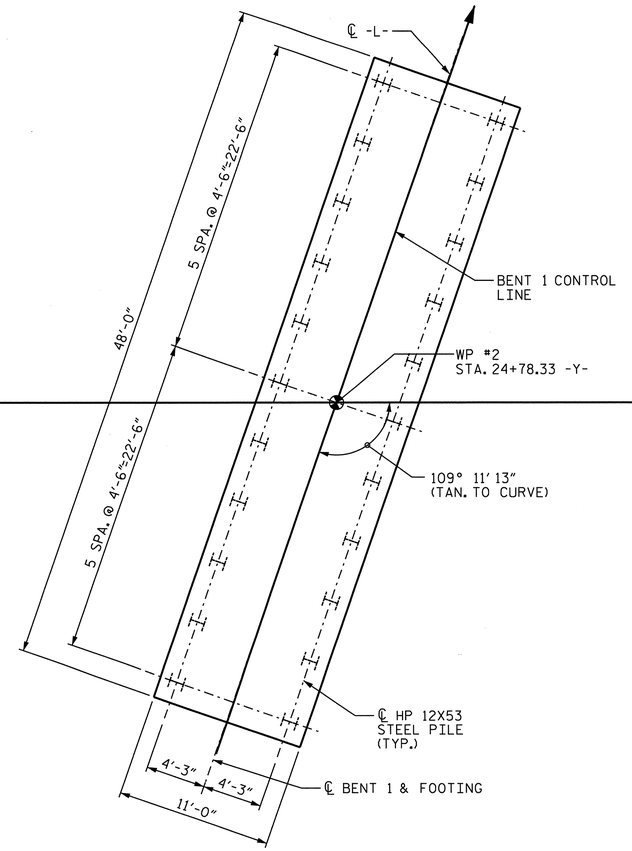

BENT NO. 1

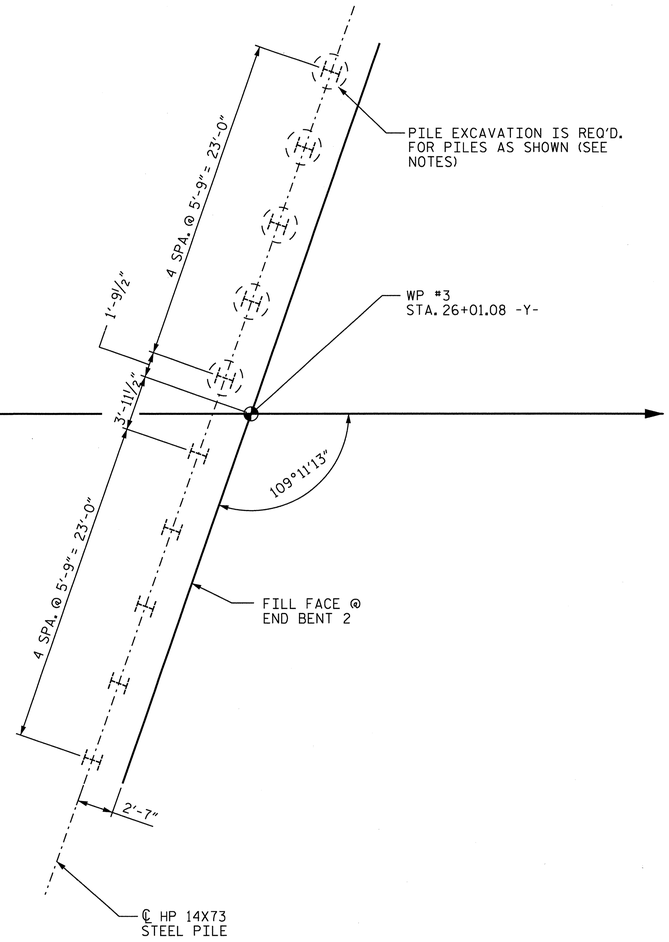

END BENT NO. 2

FOUNDATION LAYOUT PLAN

NOTES:

FOR PILES, SEE SECTION 450 OF THE STANDARD SPECIFICATIONS.

PILES AT END BENT NO. 1 AND END BENT NO. 2 ARE DESIGNED FOR A FACTORED RESISTANCE OF 140 TONS PER PILE.

DRIVE PILES AT END BENT NO. 1 AND END BENT NO. 2 TO A REQUIRED DRIVING RESISTANCE OF 235 TONS PER PILE.

PILES AT BENT NO. 1 ARE DESIGNED FOR A FACTORED RESISTANCE OF 110 TONS PER PILE.

DRIVE PILES AT BENT NO. 1 TO A REQUIRED DRIVING RESISTANCE OF 185 TONS PER PILE.

IT HAS BEEN ESTIMATED THAT A HAMMER WITH AN EQUIVALENT RATED ENERGY IN THE RANGE OF 48,500 FT-LBS TO 84,000 FT-LBS PER BLOW WILL BE REQUIRED TO DRIVE PILES AT END BENT NO. 1 AND END BENT NO. 2. THIS ESTIMATED ENERGY RANGE DOES NOT RELEASE THE CONTRACTOR FROM PROVIDING DRIVING EQUIPMENT IN ACCORDANCE WITH SUBARTICLE 450-3 (D)(2) OF THE STANDARD SPECIFICATIONS.

PILE EXCAVATION IS REQUIRED TO INSTALL PILES AT END BENT NO. 2 (LEFT SIDE). EXCAVATE HOLES AT PILE LOCATIONS TO ELEVATION 880 FT. FILLING OF HOLES SHALL BE WITH SELECT GRANULAR MATERIAL IN SECTION 265 OF THE STANDARD SPECIFICATIONS ONLY. CONCRETE, GROUT OR FLOWABLE FILL SHALL NOT BE USED TO FILL EXCAVATED HOLES. FOR PILE EXCAVATION, SEE SECTION 450 OF THE STANDARD SPECIFICATIONS.

AT THE CONTRACTOR'S OPTION, EXCAVATE ROCK BENEATH THE END BENT CAP WIDTH TO ELEVATION 880 FT. FOR THE LEFT SIDE OF THE END BENT NO. 2 AND REPLACE WITH BORROW MATERIAL TO THE BOTTOM OF CAP ELEVATION.

PROJECT NO. U-2524C

GUILFORD COUNTY

STATION: 274+26.98 -L-

SHEET 2 of 3 BRIDGE No. 1125

STATE OF NORTH CAROLINA
DEPARTMENT OF TRANSPORTATION
RALEIGH

GENERAL DRAWING

FOR BRIDGE ON SR 2136
OVER GREENSBORO WESTERN LOOP
BETWEEN SR 2124 AND SR 2085

NORTH CAROLINA PROFESSIONAL SEAL 13406 ENGINEER JOSEPH T. KELVINGTON 7/1/13

REVISIONS						SHEET NO.
NO.	BY:	DATE:	NO.	BY:	DATE:	S-500
1			3			TOTAL SHEETS
2			4			836

Stantec
Stantec Consulting Services Inc.
801 Jones Franklin Road
Suite 300
Raleigh, NC 27606
Tel. (919) 851-6866
Fax. (919) 851-7024
www.stantec.com
License No. F-0672

DRAWN BY : V. T. DOAN DATE : 05-25-12
CHECKED BY : J. T. KELVINGTON DATE : 06-15-12
DESIGN ENGINEER OF RECORD: J. T. KELVINGTON DATE : 03-28-13

U:\Structures\Y Fleming Rd\Drawing\Final\U-2524C_SD_GD_2.dgn 6/7/2013 2:25:07 PM jgelle STRUCTURES PEN TABLE.tbl Raleigh PDF Creator (Full).plt

B.M.#2 - RR SPIKE SET IN DOUBLE OAK (12"&14"), 982' RIGHT OF -BL- STATION 37+08, ELEV. 878.01'

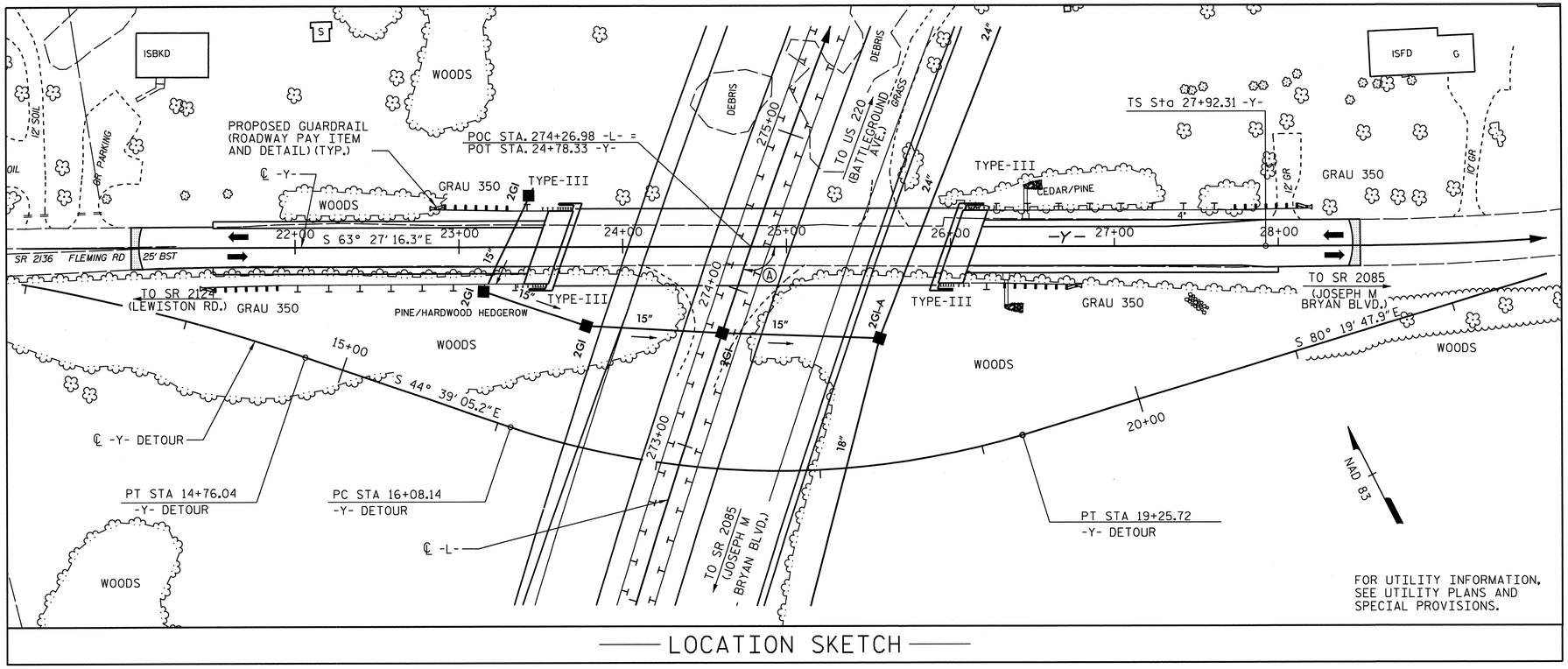

LOCATION SKETCH

NOTES:

ASSUMED LIVE LOAD = HL-93 OR ALTERNATE LOADING.

THIS BRIDGE HAS BEEN DESIGNED IN ACCORDANCE WITH THE REQUIREMENTS OF THE AASHTO LRFD BRIDGE DESIGN SPECIFICATIONS.

THIS BRIDGE IS LOCATED IN SEISMIC ZONE 1.

Ⓐ INTERSECTION SKEW = 109°11'13"(TO TANGENT)

FOR OTHER DESIGN DATA AND GNEERAL NOTES, SEE SHEET SN.

FOR SUBMITTAL OF WORKING DRAWINGS, SEE SPECIAL PROVISIONS.

FOR FALSEWORK AND FORMWORK, SEE SPECIAL PROVISIONS.

FOR CRANE SAFETY, SEE SPECIAL PROVISIONS.

FOR GROUT FOR STRUCTURES, SEE SPECIAL PROVISIONS.

THE CONTRACTOR SHALL PROVIDE INDEPENDENT ASSURANCE SAMPLES OF REINFORCING STEEL AS FOLLOWS: FOR PROJECTS REQUIRING UP TO 400 TONS OF REINFORCING STEEL, ONE 30 INCH SAMPLE OF EACH SIZE BAR USED, AND FOR PROJECTS REQUIRING OVER 400 TONS OF REINFORCING STEEL, TWO 30 INCH SAMPLES OF EACH SIZE BAR USED. THE BARS FROM WHICH THE SAMPLES ARE TAKEN MUST THEN BE SPLICED WITH REPLACEMENT BARS OF THE SIZE AND LENGTH OF THE SAMPLE, PLUS A MINIMUM LAP SPLICE OF THIRTY BAR DIAMETERS. PAYMENT FOR THE SAMPLES OF REINFORCING STEEL SHALL BE CONSIDERED INCIDENTAL TO VARIOUS PAY ITEMS.

THE CLASS AA CONCRETE IN THE BRIDGE DECK SHALL CONTAIN FLY ASH OR GROUND GRANULATED BLAST FURNACE SLAG AT THE SUBSTITUTION RATE SPECIFIED IN ARTICLE 1024-1 AND IN ACCORDANCE WITH ARTICLES 1024-5 AND 1024-6 OF THE STANDARD SPECIFICATIONS. NO PAYMENT WILL BE MADE FOR THIS SUBSTITUTION AS IT IS CONSIDERED INCIDENTAL TO THE COST OF THE REINFORCED CONCRETE DECK SLAB.

WORK SHALL NOT BE STARTED ON THIS BRIDGE UNTIL ROADWAY SECTION HAS BEEN EXCAVATED.

FOR EROSION CONTROL MEASURES, SEE EROSION CONTROL PLANS.

FOR PLACING LOAD ON STRUCTURE MEMBERS, SEE SPECIAL PROVISIONS.

REMOVABLE FORMS MAY BE USED IN LIEU OF METAL STAY-IN-PLACE FORMS IN ACCORDANCE WITH ARTICLE 420-3 OF THE STANDARD SPECIFICATIONS.

FOR MASS CONCRETE, SEE SPECIAL PROVISIONS.

TOTAL BILL OF MATERIAL

	FOUNDATION EXCAVATION	PILE EXCAVATION NOT IN SOIL	REINFORCED CONCRETE DECK SLAB	GROOVING BRIDGE FLOORS	CLASS A CONCRETE	BRIDGE APPROACH SLABS	REINFORCING STEEL	SPIRAL COLUMN REINFORCING STEEL	MODIFIED 72" PRESTRESSED CONC. GIRDERS		HP 12 X 53 STEEL PILES		HP 14 X 73 STEEL PILES		TWO BAR METAL RAIL	1'-2" X 2'-6" CONCRETE PARAPET	4" SLOPE PROTECTION	ELASTOMERIC BEARINGS
	LUMP SUM	LF	SQ.FT.	SQ.FT.	CU.YDS.	LUMP SUM	LBS.	LBS.	NO.	LIN.FT.	NO.	LIN.FT.	NO.	LIN.FT.	LIN.FT.	LIN.FT.	SQ.YDS.	LUMP SUM
SUPERSTRUCTURE			11,168	10,898		LUMP SUM			10	1,174.38					463.69	479.50		LUMP SUM
END BENT NO.1					46.6		6,869						10	550			216	
BENT NO.1	LUMP SUM				160.5		19,303	1,319			22	770						
END BENT NO.2		15			46.7		6,878						10	425			209	
TOTAL	LUMP SUM	15	11,168	10,898	253.8	LUMP SUM	33,050	1,319	10	1,174.38	22	770	20	975	463.69	479.50	425	LUMP SUM

PROJECT NO. U-2524C

GUILFORD COUNTY

STATION: 274+26.98 -L-

SHEET 3 OF 3 BRIDGE NO. 1125

STATE OF NORTH CAROLINA
DEPARTMENT OF TRANSPORTATION
RALEIGH

GENERAL DRAWING

FOR BRIDGE ON SR 2136
OVER GREENSBORO WESTERN LOOP
BETWEEN SR 2124 AND SR 2085

NORTH CAROLINA PROFESSIONAL SEAL 13406 ENGINEER JOSEPH T. KELVINGTON

REVISIONS						SHEET NO.
NO.	BY:	DATE:	NO.	BY:	DATE:	S-501
1			3			TOTAL SHEETS
2			4			836

Stantec
Stantec Consulting Services Inc.
801 Jones Franklin Road
Suite 300
Raleigh, NC 27606
Tel. (919) 851-6866
Fax. (919) 851-7024
www.stantec.com
License No. F-0672

DRAWN BY : C. B. BAKER DATE : 05-25-12
CHECKED BY : J. T. KELVINGTON DATE : 06-15-12

DESIGN ENGINEER OF RECORD: J. T. KELVINGTON DATE : 03-28-13

U:\Structures\Y Fleming Rd\Drawing\Final\U-2524C_SD_GD_3.dgn 6/7/2013 2:25:10 PM jgelle STRUCTURES PEN TABLE.tbl Raleigh PDF Creator (Full).pit

LOAD AND RESISTANCE FACTOR RATING (LRFR) SUMMARY FOR PRESTRESSED CONCRETE GIRDERS

LEVEL		VEHICLE	WEIGHT (W) (TONS)	(#) CONTROLLING LOAD RATING	MINIMUM RATING FACTORS (RF)	TONS = W × RF	STRENGTH I LIMIT STATE										SERVICE III LIMIT STATE						COMMENT NUMBER
								MOMENT					SHEAR					MOMENT						
							LIVE-LOAD FACTORS (γ_{LL})	DISTRIBUTION FACTORS (DF)	RATING FACTOR	SPAN	GIRDER LOCATION	DISTANCE FROM LEFT END OF SPAN (ft)	DISTRIBUTION FACTORS (DF)	RATING FACTOR	SPAN	GIRDER LOCATION	DISTANCE FROM LEFT END OF SPAN (ft)	LIVE-LOAD FACTORS (γ_{LL})	DISTRIBUTION FACTORS (DF)	RATING FACTOR	SPAN	GIRDER LOCATION	DISTANCE FROM LEFT END OF SPAN (ft)	
DESIGN LOAD RATING		HL-93 (INVENTORY)	N/A	1	1.13	--	1.75	.840	1.23	1	EL	113.1	1.011	1.13	2	I	23.4	0.80	.799	1.14	1	I	56.6	
		HL-93 (OPERATING)	N/A		1.49	--	1.35	.840	1.59	1	EL	113.1	1.011	1.49	2	I	23.4	N/A	--	--	--	--	--	
		HS-20 (INVENTORY)	36.000	2	1.61	58	1.75	.840	2.02	1	EL	56.6	1.011	1.64	2	I	23.4	0.80	.799	1.61	1	I	56.6	
		HS-20 (OPERATING)	36.000		2.15	77	1.35	.840	2.62	1	EL	56.6	1.011	2.15	2	I	23.4	N/A	--	--	--	--	--	
LEGAL LOAD RATING	SINGLE VEHICLE (SV)	SNSH	13.500		3.85	52	1.40	.840	6.04	1	EL	56.6	1.011	5.55	2	I	23.4	0.80	.799	3.85	1	I	56.6	
		SNGARBS2	20.000		2.76	55	1.40	.840	4.34	1	EL	56.6	1.011	3.84	2	I	23.4	0.80	.799	2.76	1	I	56.6	
		SNAGRIS2	22.000		2.58	57	1.40	.840	4.04	1	EL	56.6	1.011	3.53	2	I	23.4	0.80	.799	2.58	1	I	56.6	
		SNCOTTS3	27.250		1.91	52	1.40	.840	2.99	1	EL	56.6	1.011	2.66	2	I	23.4	0.80	.799	1.91	1	I	56.6	
		SNAGGRS4	34.925		1.56	55	1.40	.840	2.45	1	EL	56.6	1.011	2.05	2	I	23.4	0.80	.799	1.56	1	I	56.6	
		SNS5A	35.550		1.54	55	1.40	.840	2.41	1	EL	56.6	1.011	2.03	2	I	23.4	0.80	.799	1.54	1	I	56.6	
		SNS6A	39.950		1.39	56	1.40	.840	2.19	1	EL	45.1	1.011	1.84	2	I	23.4	0.80	.799	1.39	1	I	56.6	
		SNS7B	42.000		1.33	56	1.40	.840	2.08	1	EL	56.6	1.011	1.78	2	I	23.4	0.80	.799	1.33	1	I	56.6	
	TRUCK TRACTOR SEMI-TRAILER (TTST)	TNAGRIT3	33.000		1.7	56	1.40	.840	2.67	1	EL	56.6	1.011	2.2	2	I	23.4	0.80	.799	1.7	1	I	56.6	
		TNT4A	33.075		1.7	56	1.40	.840	2.66	1	EL	56.6	1.011	2.14	2	I	23.4	0.80	.799	1.7	1	I	56.6	
		TNT6A	41.600		1.37	57	1.40	.840	2.15	1	EL	56.6	1.011	1.84	2	I	23.4	0.80	.799	1.37	1	I	56.6	
		TNT7A	42.000		1.38	58	1.40	.840	2.16	1	EL	56.6	1.011	1.79	2	I	23.4	0.80	.799	1.38	1	I	56.6	
		TNT7B	42.000		1.4	59	1.40	.840	2.19	1	EL	56.6	1.011	1.72	2	I	23.4	0.80	.799	1.4	1	I	56.6	
		TNAGRIT4	43.000		1.35	58	1.40	.840	2.12	1	EL	56.6	1.011	1.67	2	I	23.4	0.80	.799	1.35	1	I	56.6	
		TNAGT5A	45.000		1.28	58	1.40	.840	2.01	1	EL	56.6	1.011	1.63	2	I	23.4	0.80	.799	1.28	1	I	56.6	
		TNAGT5B	45.000	3	1.27	57	1.40	.840	1.99	1	EL	56.6	1.011	1.67	2	I	23.4	0.80	.799	1.27	1	I	56.6	

LOAD FACTORS:

DESIGN LOAD RATING FACTORS	LIMIT STATE	γ_{DC}	γ_{DW}
	STRENGTH I	1.25	1.50
	SERVICE III	1.00	1.00

NOTES:

MINIMUM RATINC FACTORS ARE BASED ON THE STRENGTH I AND SERVICE III LIMIT STATES.

ALLOWABLE STRESSES FOR SERVICE III LIMIT STATE ARE AS REQUIRED FOR DESIGN.

(#) CONTROLLING LOAD RATING

(1) DESIGN LOAD RATING (HL-93)

(2) DESIGN LOAD RATING (HS-20)

(3) LEGAL LOAD RATING **

** SEE CHART FOR VEHICLE TYPE

GIRDER LOCATION

I - INTERIOR GIRDER
EL - EXTERIOR LEFT GIRDER
ER - EXTERIOR RIGHT GIRDER

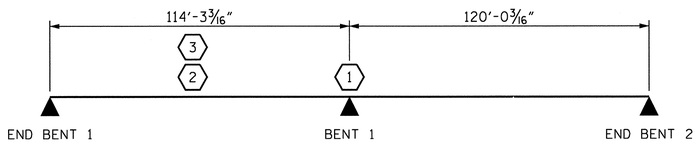

LRFR SUMMARY

PROJECT NO. U-2524C

GUILFORD COUNTY

STATION: 274+26.98 -L-

Stantec Consulting Services Inc.
801 Jones Franklin Road
Suite 300
Raleigh, NC 27606
Tel. (919) 851-6866
Fax. (919) 851-7024
www.stantec.com
License No. F-0672

DRAWN BY : B. J. ELLIOT DATE : 05-25-12
CHECKED BY : T. R. DUDECK DATE : 06-15-12
DESIGN ENGINEER OF RECORD: J. T. KELVINGTON DATE : 03-28-13

NORTH CAROLINA PROFESSIONAL SEAL 13406 ENGINEER JOSEPH T. KELVINGTON

STATE OF NORTH CAROLINA
DEPARTMENT OF TRANSPORTATION
RALEIGH

LRFR SUMMARY

REVISIONS						SHEET NO.
NO.	BY:	DATE:	NO.	BY:	DATE:	S-502
1			3			TOTAL SHEETS
2			4			830

U:\Structures\Y Fleming Rd\Drawing\Final\U-2524C_SD_LRFR.dgn 6/7/2013 2:25:12 PM Igelle STRUCTURES PEN TABLE.tbl Raleigh PDF Creator (Full).plt

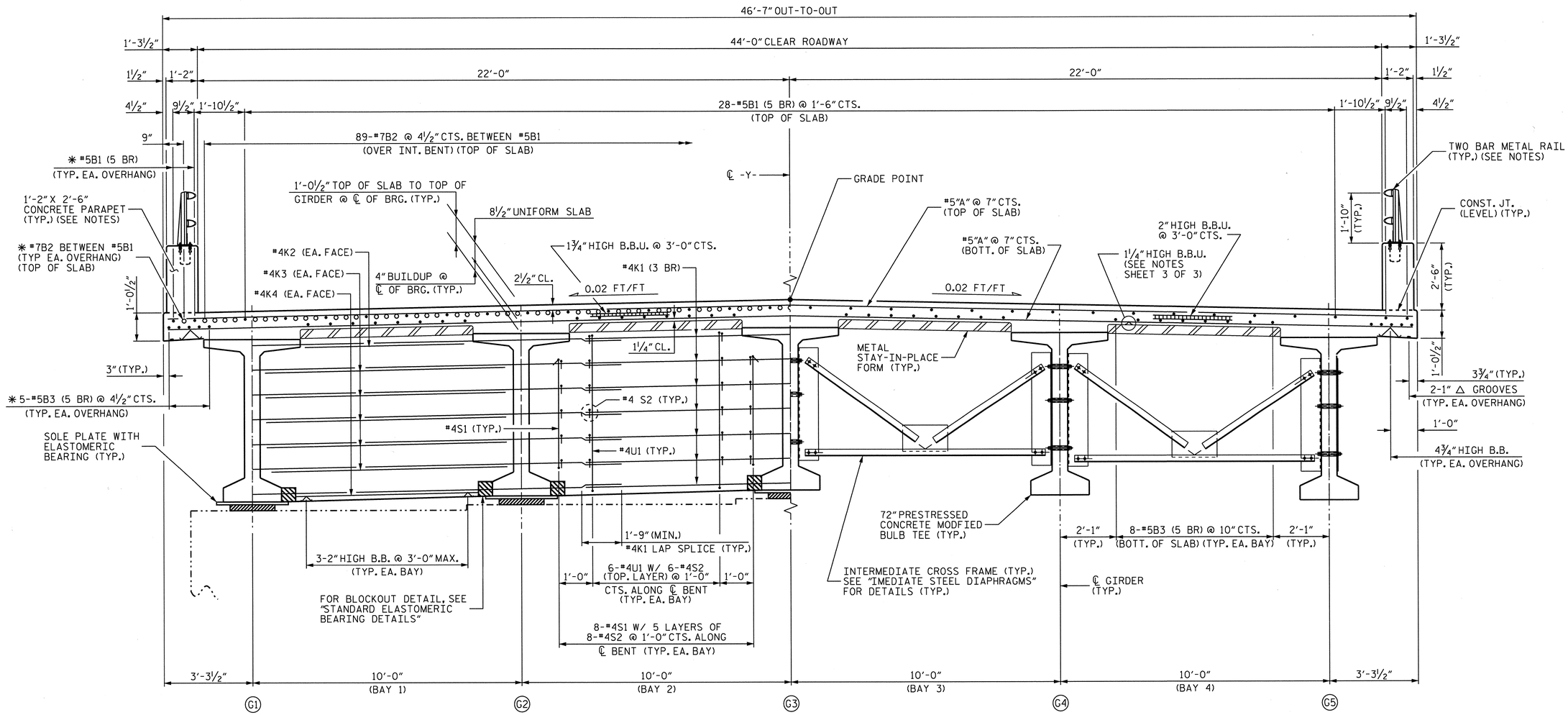

HALF-SECTION AT
INTERIOR BENT

HALF-SECTION AT
INTERMEDIATE DIAPHRAGMS

TYPICAL SECTION

✱ SEE "CONCRETE PARAPET AND END POST" SHT. 2 OF 2 FOR ADDITIONAL PLACEMENT DETAILS.

NOTES

- DENOTES CONTINUOUS LONGITUDINAL DECK REINFORCEMENT.

o DENOTES NON-CONTINUOUS LONGITUDINAL DECK REINFORCEMENT.

SEE "SUPERSTRUCTURE TYPICAL SECTION", SHEET 3 OF 3 FOR NOTES.

FOR CONCRETE PARAPET DETAILS, SEE "CONCRETE PARAPET AND END POST" SHEET.

FOR 2 BAR METAL RAIL DETAILS, SEE "RAIL POST SPACING AND END OF RAIL DETAILS" IN ADDITION TO "2 BAR METAL RAILS" SHEET.

3 BR DENOTES 3 BAR RUN.

5 BR DENOTES 5 BAR RUN.

Stantec
Stantec Consulting Services Inc.
801 Jones Franklin Road
Suite 300
Raleigh, NC 27606
Tel. (919) 851-6866
Fax. (919) 851-7024
www.stantec.com
License No. F-0672

DRAWN BY : V. T. DOAN DATE : 05-25-12
CHECKED BY : J. T. KELVINGTON DATE : 06-15-12

DESIGN ENGINEER OF RECORD: J. T. KELVINGTON DATE : 03-28-13

NORTH CAROLINA PROFESSIONAL SEAL 13406 ENGINEER JOSEPH T. KELVINGTON

PROJECT NO. U-2524C
GUILFORD COUNTY
STATION: 274+26.98 -L-

SHEET 1 of 3

STATE OF NORTH CAROLINA
DEPARTMENT OF TRANSPORTATION
RALEIGH

SUPERSTRUCTURE

TYPICAL SECTION

REVISIONS						SHEET NO.
NO.	BY:	DATE:	NO.	BY:	DATE:	S-503
1			3			TOTAL SHEETS
2			4			836

U:\Structures\Y Fleming Rd\Drawing\Final\U-2524C_SD_TS_Y.dgn 6/7/2013 2:25:04 PM jgelle STRUCTURES PEN TABLE.tbl Raleigh PDF Creator (Full).plt

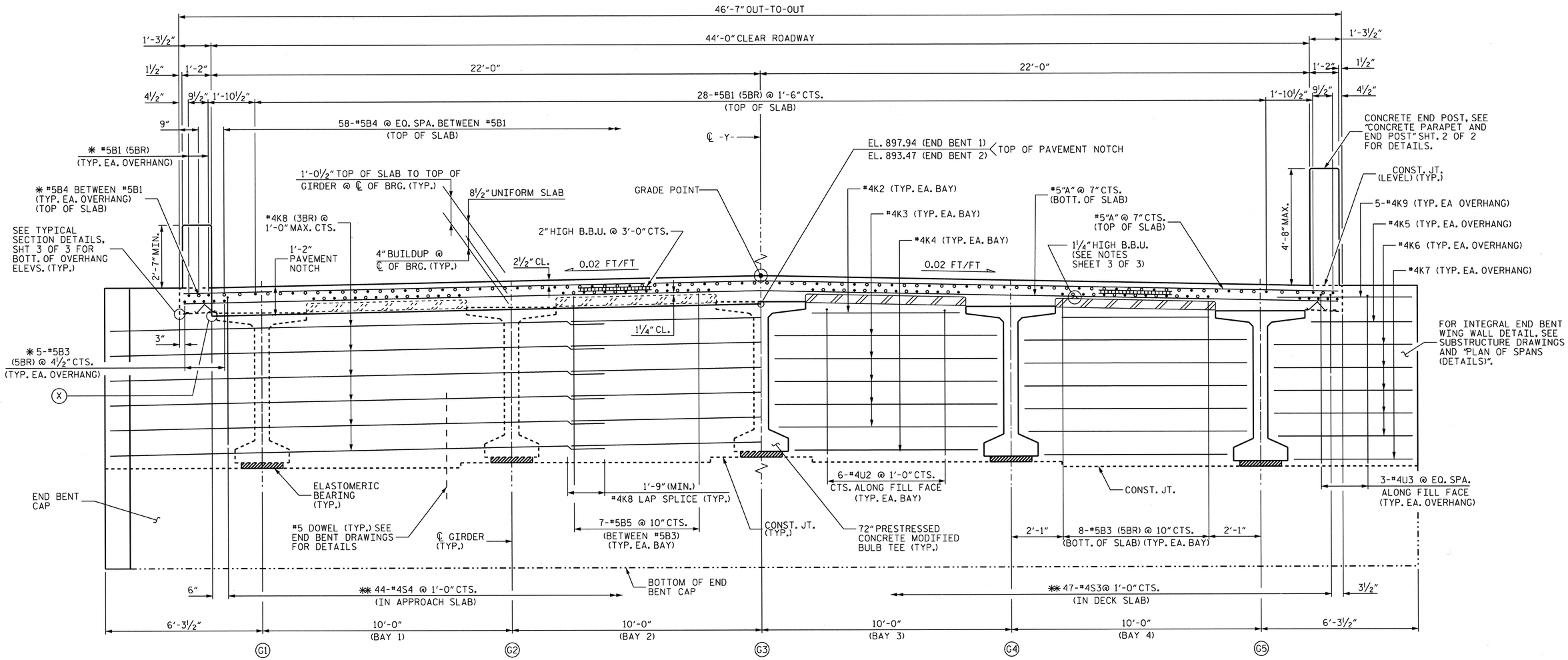

TXT

INTEGRAL DIAPHRAGM HALF-SECTION REINFORCEMENT AT FILL FACE

INTEGRAL DIAPHRAGM HALF-SECTION REINFORCEMENT AT FRONT FACE

TYPICAL SECTION AT END BENTS

✱ SEE "CONCRETE PARAPET AND END POST" SHT. 2 OF 2 FOR ADDITIONAL PLACEMENT DETAILS.

✱✱ #4"S" BARS MAY BE REPOSITIONED AS REQUIRED TO CLEAR PRESTRESSED GIRDERS

(X) TOP OF PAVEMENT NOTCH. SEE "PLAN OF SPAN DETAILS (END BENT 1)" AND "PLAN OF SPAN DETAILS (END BENT 2)" FOR ELEVATION REQUIREMENTS @ EA. LOCATION.

NOTES

- DENOTES CONTINUOUS LONGITUDINAL DECK REINFORCEMENT.
- o DENOTES NON-CONTINUOUS LONGITUDINAL DECK REINFORCEMENT.

SEE "SUPERSTRUCTURE TYPICAL SECTION", SHEET 3 OF 3 FOR NOTES.

FOR CONCRETE END POST DETAILS, SEE "CONCRETE PARAPET AND END POST" SHEET.

3BR DENOTES 3 BAR RUN.

5BR DENOTES 5 BAR RUN.

Stantec Consulting Services Inc.
801 Jones Franklin Road
Suite 300
Raleigh, NC 27606
Tel. (919) 851-6866
Fax. (919) 851-7024
www.stantec.com
License No. F-0672

DRAWN BY : V. T. DOAN DATE : 05-25-12
CHECKED BY : J. T. KELVINGTON DATE : 06-15-12

DESIGN ENGINEER OF RECORD: J. T. KELVINGTON DATE : 03-28-13

NORTH CAROLINA PROFESSIONAL SEAL 13406 ENGINEER JOSEPH T. KELVINGTON

PROJECT NO. U-2524C
GUILFORD COUNTY
STATION: 274+26.98 -L-

SHEET 2 of 3

STATE OF NORTH CAROLINA
DEPARTMENT OF TRANSPORTATION
RALEIGH

SUPERSTRUCTURE

TYPICAL SECTION

REVISIONS						SHEET NO.
NO.	BY:	DATE:	NO.	BY:	DATE:	S-504
1			3			TOTAL SHEETS
2			4			836

U:\Structures\Y Fleming Rd\Drawing\Final\U-2524C_SD_TS_Y_2.dgn 6/7/2013 2:25:16 PM jgelle STRUCTURES PEN TABLE.tbl Raleigh PDF Creator (Full).plt

NOTES:

PROVIDE 1¼"HIGH BEAM BOLSTERS UPPER AT 4'-0"CTS. ATOP THE METAL STAY-IN-PLACE FORMS TO SUPPORT THE BOTTOM MAT OF 'A' BARS. WHEN USING REMOVABLE FORMS, PROVIDE CONTINUOUS HIGH CHAIRS FOR METAL DECK (C.H.C.M.) @ 4'-0"CTS. WITH A HEIGHT TO SUPPORT THE BOTTOM MAT OF 'A' BARS A CLEAR DISTANCE OF 2½" ABOVE THE TOP OF THE REMOVABLE FORM.

LONGITUDINAL STEEL MAY BE SHIFTED SLIGHTLY, AS NECESSARY, TO AVOID INTERFERENCE WITH STIRRUPS IN PRESTRESSED CONCRETE GIRDERS.

NO CHAMFER IS REQUIRED ON CORNERS OF GIRDER BUILDUPS.

PREVIOUSLY CAST CONCRETE IN A CONTINUOUS UNIT SHALL HAVE ATTAINED A MINIMUM COMPRESSIVE STRENGTH OF 3,000 PSI BEFORE ADDITIONAL CONCRETE IS CAST IN THE UNIT EXCEPT AS NOTED IN THE PLANS.

CONCRETE PARAPET IN A CONTINUOUS UNIT SHALL NOT BE CAST UNTIL ALL SLAB CONCRETE IN THE UNIT HAS BEEN CAST AND HAS REACHED A MINIMUM COMPRESSIVE STRENGTH OF 3,000 PSI.

#5G1 BAR MAY BE SHIFTED SLIGHTLY, AS NECESSARY TO CLEAR REINFORCING STEEL AND STIRRUPS.

ALL REINFORCING STEEL IN CONCRETE PARAPETS SHALL BE EPOXY COATED.

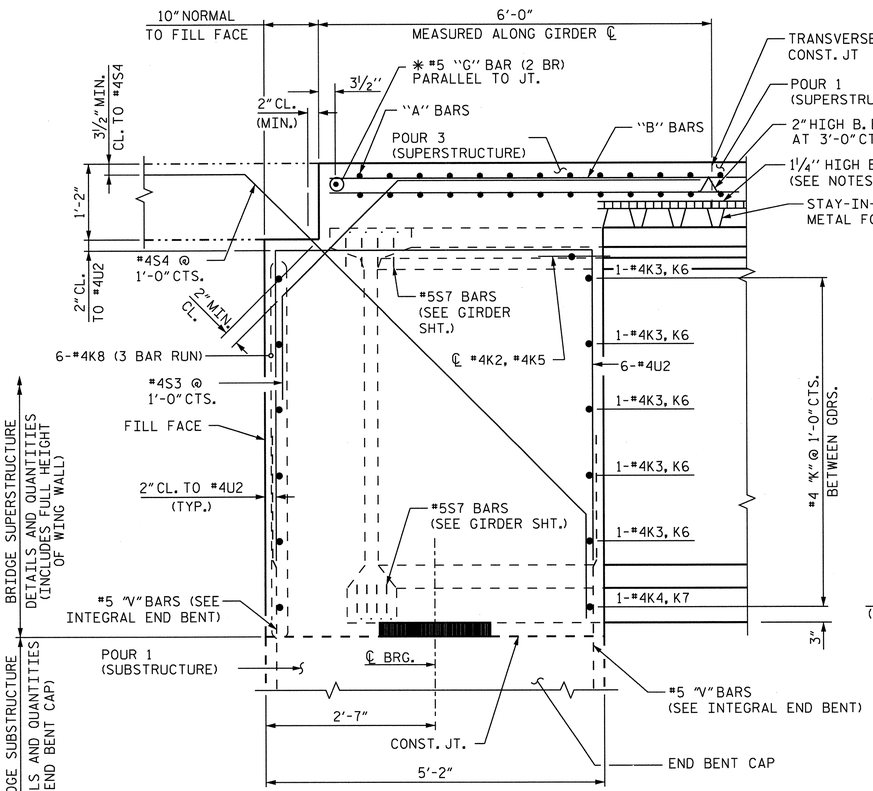

SECTION B-B

SECTION THRU INTEGRAL END BENT DIAPHRAGM
WORK WITH "PLAN OF SPANS," SHEET 2 OF 3

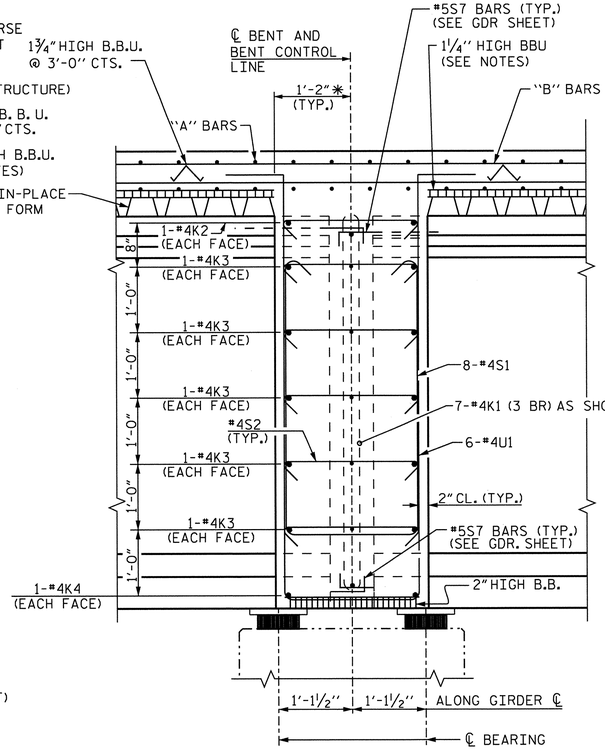

SECTION A-A

SECTION THRU DIAPHRAGM @ INTERIOR BENT
WORK WITH "PLAN OF SPANS," SHEET 2 OF 3

NOTE: 3 BR DENOTES 3 BAR RUN
2 BR DENOTES 2 BAR RUN

✱ NORMAL TO ℄ BENT

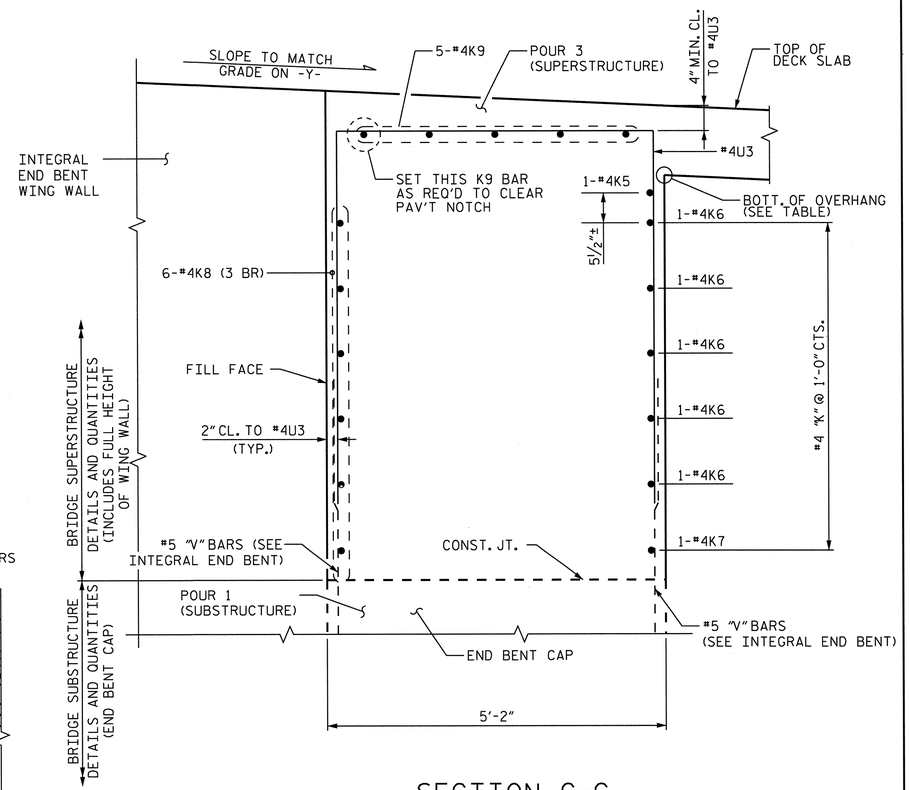

SECTION C-C

SECTION THRU INTEGRAL END BENT DIAPHRAGM
BEYOUND O.S. EDGE OF DECK SLAB.
WORK WITH "PLAN OF SPAN DETAILS - DIAPHRAGMS",
SHEET 1 OF 3

BOTTOM OF OVERHANG ELEVS. @ OUTSIDE EDGE OF SUPERSTR.

OVERHANG	END BENT	ELEV.
LEFT SIDE	1	897.37
RIGHT SIDE	1	897.67
LEFT SIDE	2	893.11
RIGHT SIDE	2	893.41

PROJECT NO. U-2524C
GUILFORD COUNTY
STATION: 274+26.98 -L-

SHEET 3 of 3

STATE OF NORTH CAROLINA
DEPARTMENT OF TRANSPORTATION
RALEIGH

SUPERSTRUCTURE

TYPICAL SECTION (DETAILS)

Stantec Consulting Services Inc.
801 Jones Franklin Road
Suite 300
Raleigh, NC 27606
Tel. (919) 851-6866
Fax. (919) 851-7024
www.stantec.com
License No. F-0672

DRAWN BY : V. T. DOAN DATE : 05-25-12
CHECKED BY : S. S. YUEN DATE : 06-15-12
DESIGN ENGINEER OF RECORD: J. T. KELVINGTON DATE : 03-28-13

SEAL 13406 PROFESSIONAL ENGINEER JOSEPH T. KELVINGTON

REVISIONS						SHEET NO.
NO.	BY:	DATE:	NO.	BY:	DATE:	S-505
1			3			TOTAL SHEETS
2			4			834

U:\Structures\Y Fleming Rd\Drawing\Final\U-2524C_SD_TS_Y_3.dgn 6/7/2013 2:25:19 PM jgelle STRUCTURES PEN TABLE.tbl Raleigh PDF Creator (Full).plt

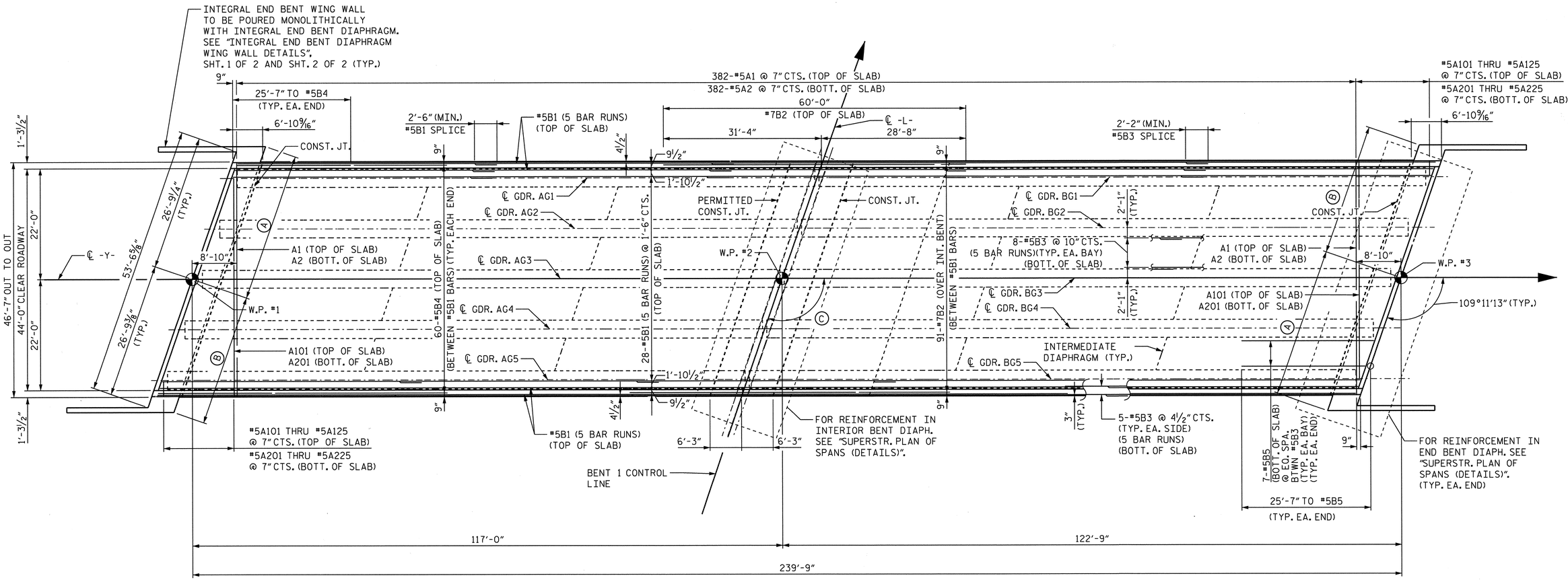

PLAN OF SPANS A & B

Ⓒ SKEW ANGLE WITH RESPECT TO TANGENT TO ℄ -L- @ STA. 274+26.98 = 109°11'13"

Ⓐ = 29'-7 1/2"

Ⓑ = 26'-0 1/2"

PROJECT NO. U-2524C

GUILFORD COUNTY

STATION: 274+26.98 -L-

STATE OF NORTH CAROLINA
DEPARTMENT OF TRANSPORTATION
RALEIGH

SUPERSTRUCTURE

PLAN OF SPANS

REVISIONS						SHEET NO.
NO.	BY:	DATE:	NO.	BY:	DATE:	S-506
1			3			TOTAL SHEETS
2			4			830

Stantec
Stantec Consulting Services Inc.
801 Jones Franklin Road
Suite 300
Raleigh, NC 27606
Tel. (919) 851-6866
Fax. (919) 851-7024
www.stantec.com
License No. F-0672

DRAWN BY : V. T. DOAN DATE : 05-25-12
CHECKED BY : S. S. YUEN DATE : 06-15-12

DESIGN ENGINEER OF RECORD: J. T. KELVINGTON DATE : 03-28-13

NORTH CAROLINA PROFESSIONAL SEAL 13406 ENGINEER JOSEPH T. KELVINGTON

U:\Structures\Y Fleming Rd\Drawing\Final\U-2524C_SD_SS_1.dgn 6/7/2013 2:25:21 PM jgelle STRUCTURES PEN TABLE.tbl Raleigh PDF Creator (Full).plt

U:\Structures\Y Fleming Rd\Drawing\Final\U-2524C_SD_SS_2.dgn 6/7/2013 2:25:23 PM jgelle STRUCTURES PEN TABLE.tbl Raleigh PDF Creator (Full).plt

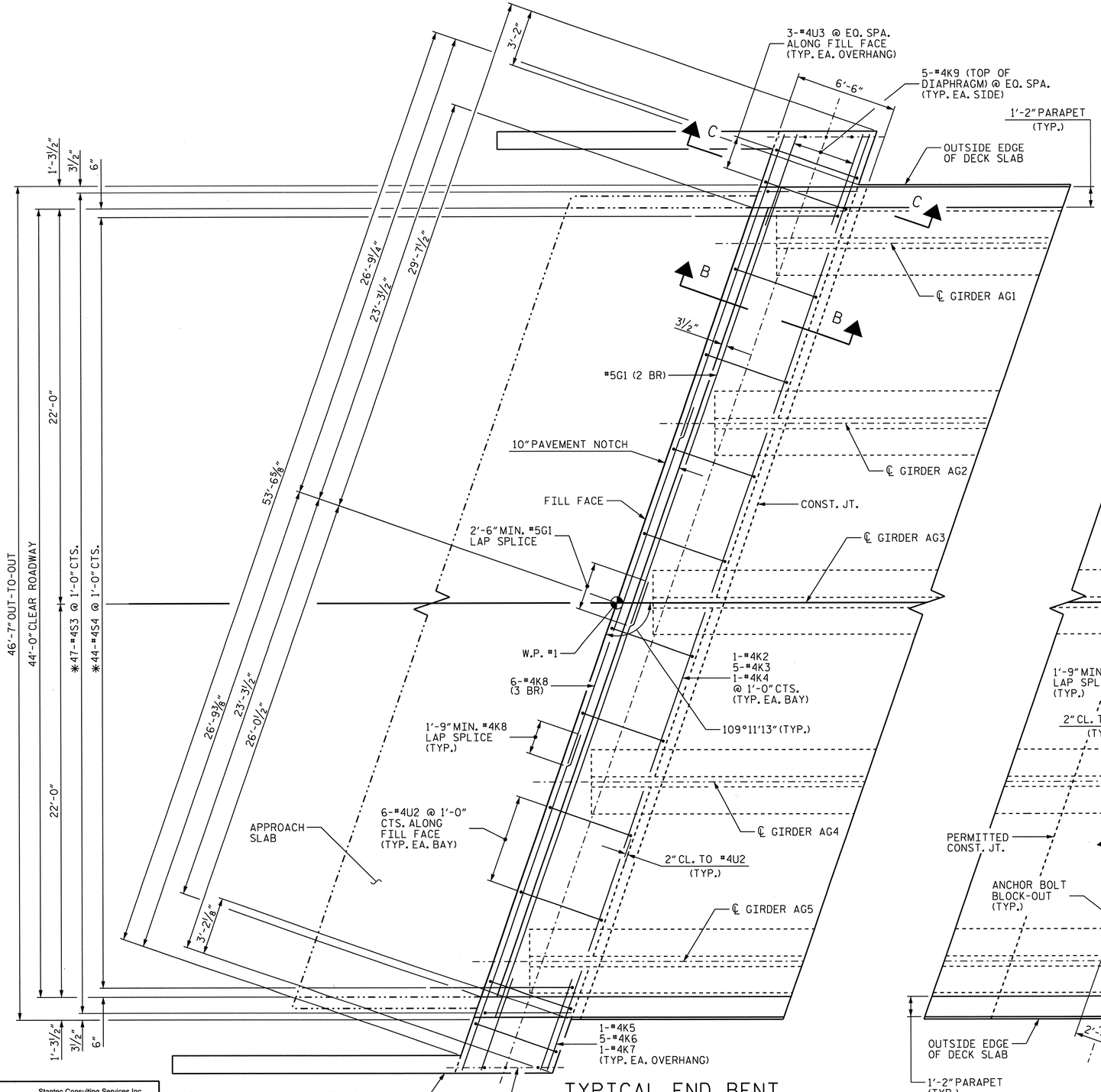

TYPICAL END BENT DIAPHRAGM REINFORCING DETAIL

DETAILS AT END BENT 1 SHOWN.
DETAILS AT END BENT 2 ARE SIMILAR BY ROTATION.

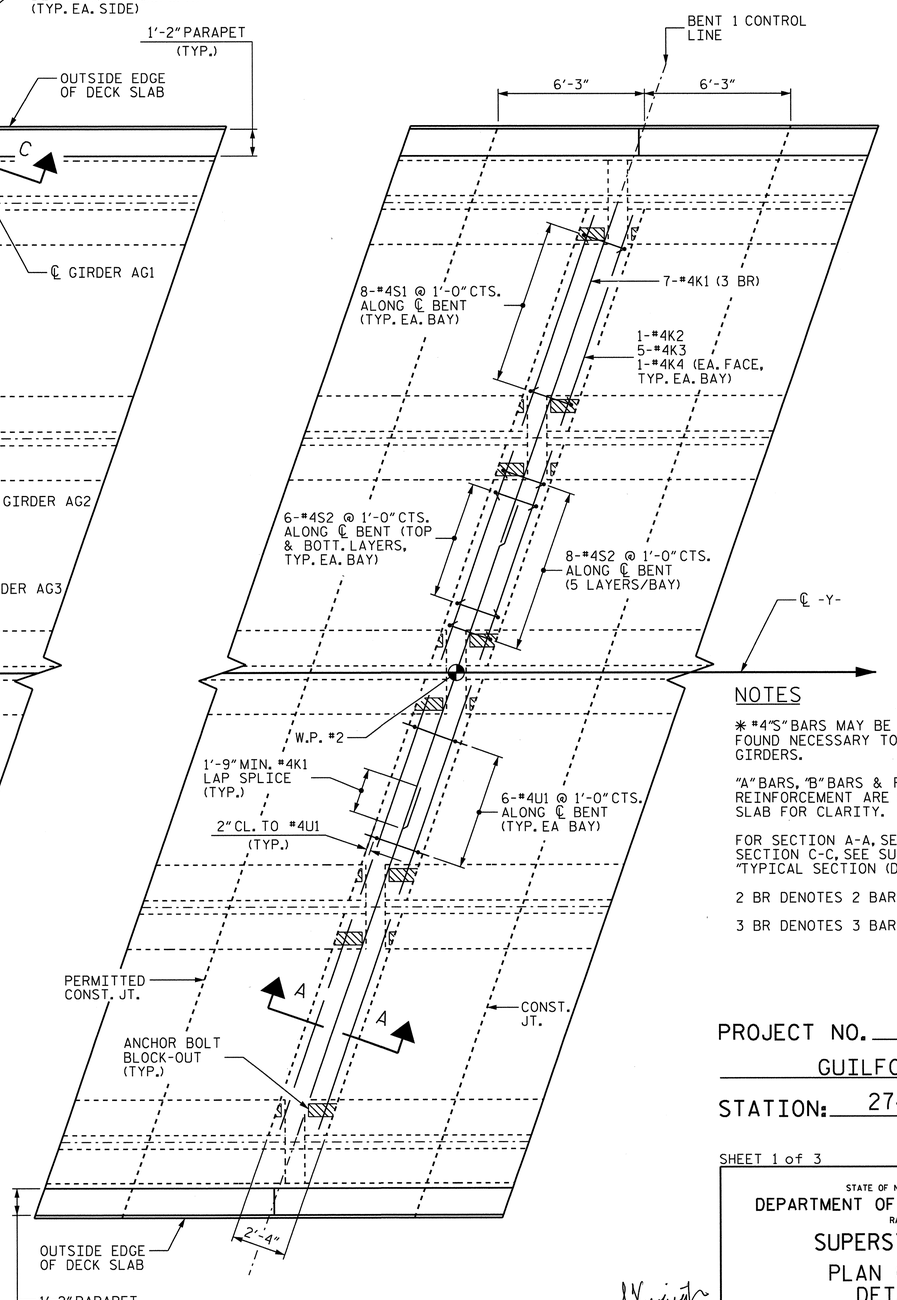

BENT DIAPHRAGM REINFORCING DETAIL

NOTES

* "#4S" BARS MAY BE REPOSITIONED AS FOUND NECESSARY TO CLEAR PRESTRESSED GIRDERS.

"A" BARS, "B" BARS & PARAPET REINFORCEMENT ARE NOT SHOWN IN DECK SLAB FOR CLARITY.

FOR SECTION A-A, SECTION B-B & SECTION C-C, SEE SUPERSTRUCTURE "TYPICAL SECTION (DETAILS)", SHT. 3 OF 3.

2 BR DENOTES 2 BAR RUN.

3 BR DENOTES 3 BAR RUN.

PROJECT NO. U-2524C

GUILFORD COUNTY

STATION: 274+26.98 -L-

SHEET 1 of 3

STATE OF NORTH CAROLINA
DEPARTMENT OF TRANSPORTATION
RALEIGH

SUPERSTRUCTURE
PLAN OF SPAN DETAILS- DIAPHRAGMS

REVISIONS						SHEET NO.
NO.	BY:	DATE:	NO.	BY:	DATE:	S-507
1			3			TOTAL SHEETS
2			4			83

Stantec
Stantec Consulting Services Inc.
801 Jones Franklin Road
Suite 300
Raleigh, NC 27606
Tel. (919) 851-6866
Fax. (919) 851-7024
www.stantec.com
License No. F-0672

DRAWN BY : V. T. DOAN DATE : 05-25-12
CHECKED BY : J. T. KELVINGTON DATE : 06-15-12

DESIGN ENGINEER OF RECORD: _____ DATE : 03-28-13

NORTH CAROLINA PROFESSIONAL SEAL 13406 ENGINEER JOSEPH T. KELVINGTON

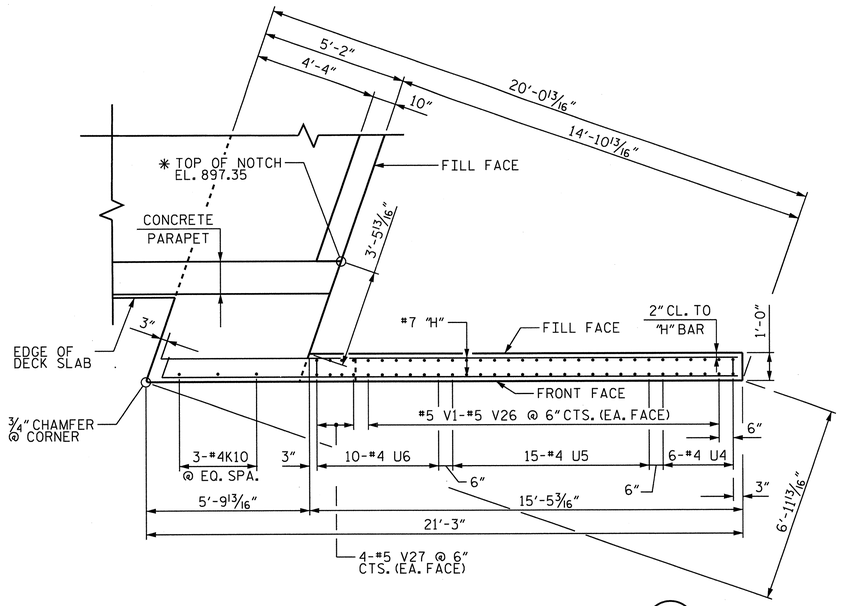

PLAN OF LEFT WING (W1)

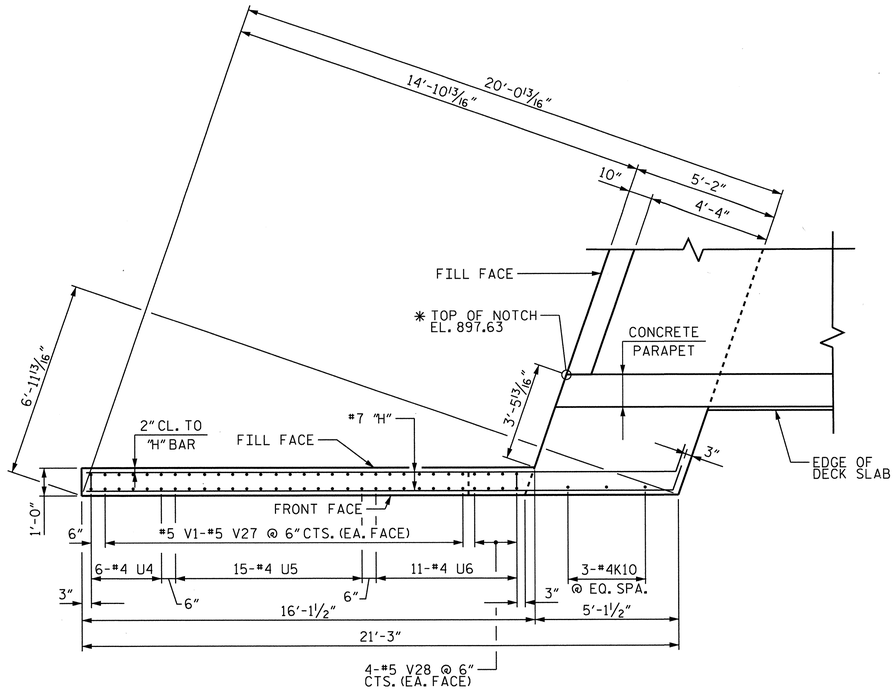

PLAN OF RIGHT WING (W2)

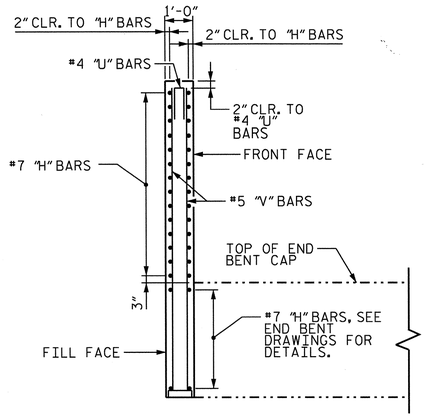

SECTION E-E

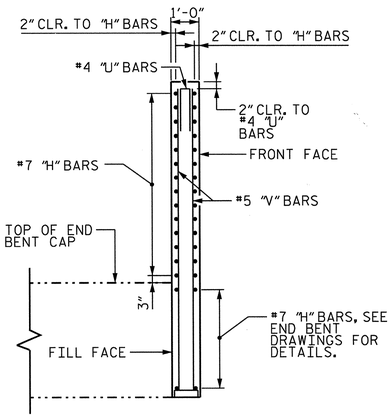

SECTION F-F

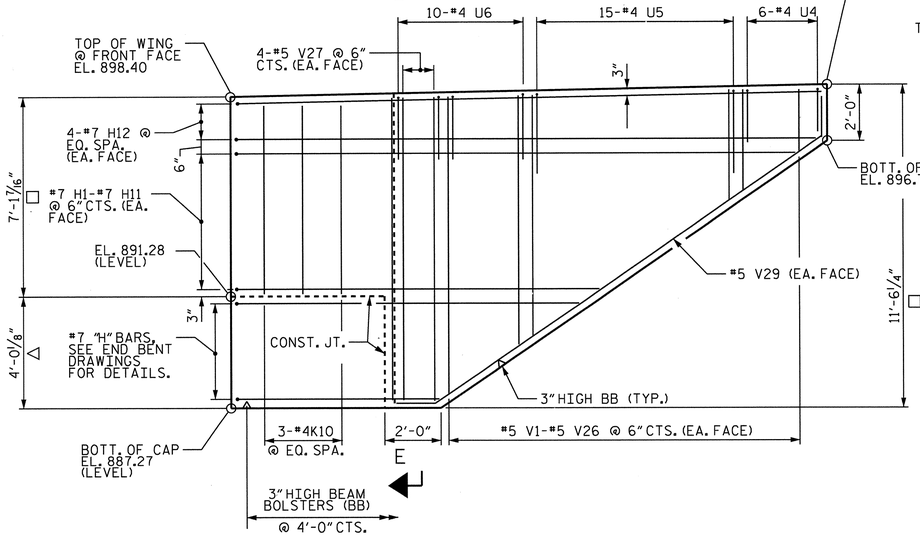

ELEVATION OF LEFT WING (W1)

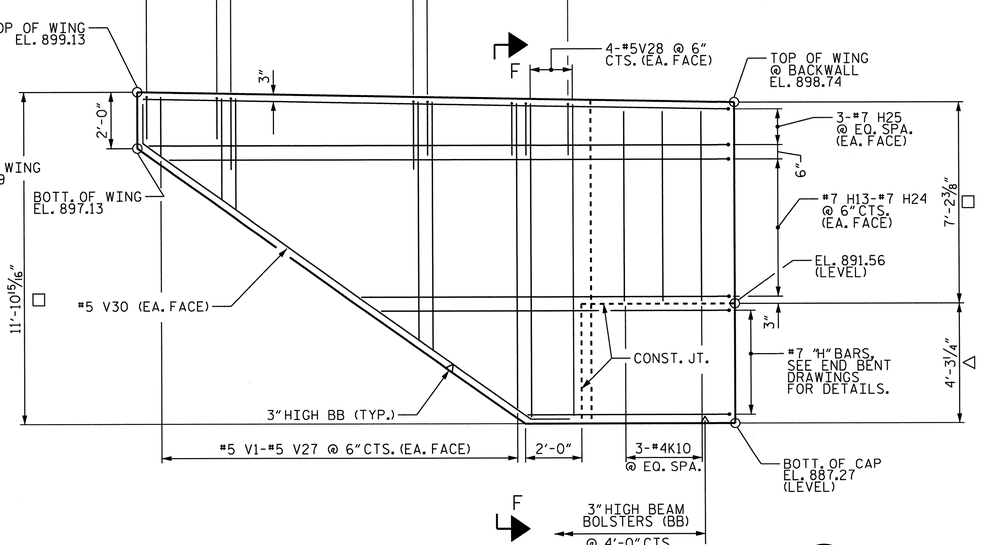

ELEVATION OF RIGHT WING (W2)

NOTES

* ✱ SEE TYPICAL SECTION SHT. 2 OF 2 FOR VERTICAL LOCATION OF TOP OF NOTCH
* □ END BENT CAP - SUBSTRUCTURE POUR 1
* △ DIAPHRAGM AND WING WALL - SUPERSTRUCTURE POUR 3

  LAP #4 U4 THRU #4 U6 BARS W/ #5 "V" BARS ON EA. FACE OF WING

Stantec Consulting Services Inc.
801 Jones Franklin Road
Suite 300
Raleigh, NC 27606
Tel. (919) 851-6866
Fax. (919) 851-7024
www.stantec.com
License No. F-0672

DRAWN BY : V. T. DOAN DATE : 05-25-12
CHECKED BY : S. S. YUEN DATE : 06-15-12
DESIGN ENGINEER OF RECORD: J. T. KELVINGTON DATE : 03-28-13

NORTH CAROLINA PROFESSIONAL SEAL 13406 ENGINEER JOSEPH T. KELVINGTON

PROJECT NO. U-2524C
GUILFORD COUNTY
STATION: 274+26.98 -L-

SHEET 2 of 3

STATE OF NORTH CAROLINA
DEPARTMENT OF TRANSPORTATION
RALEIGH
SUPERSTRUCTURE

PLAN OF SPAN DETAILS
WING WALL (END BENT 1)

REVISIONS						SHEET NO.
NO.	BY:	DATE:	NO.	BY:	DATE:	S-508
1			3			TOTAL SHEETS
2			4			836

U:\Structures\V Fleming Rd\Drawings\Final\U-2524C_SD_EBL2.dgn 6/7/2013 2:25:25 PM jgelle STRUCTURES PEN TABLE.tbl Raleigh PDF Creator (Full).plt

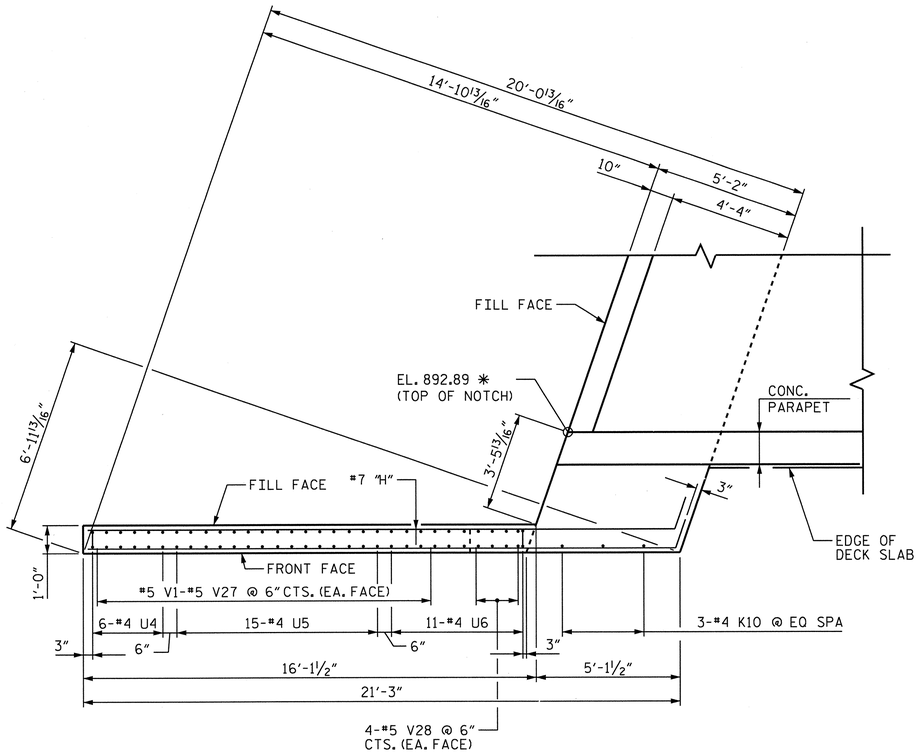

PLAN OF LEFT WING (W3)

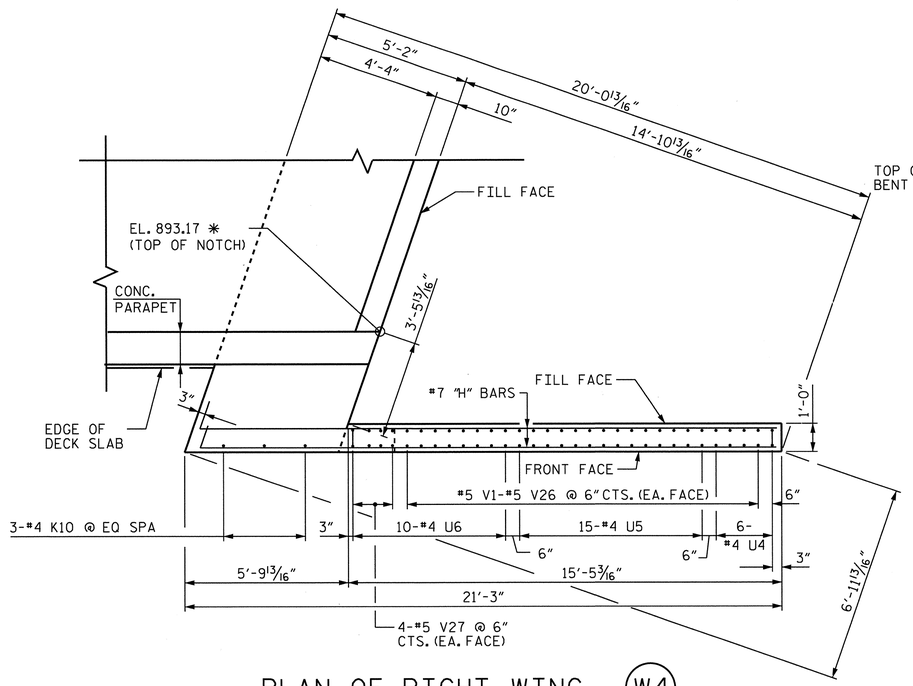

PLAN OF RIGHT WING (W4)

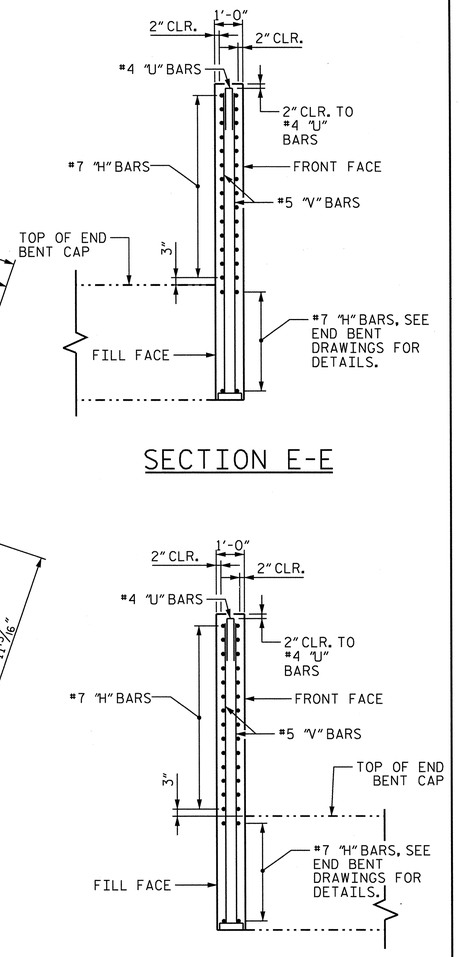

SECTION E-E

SECTION F-F

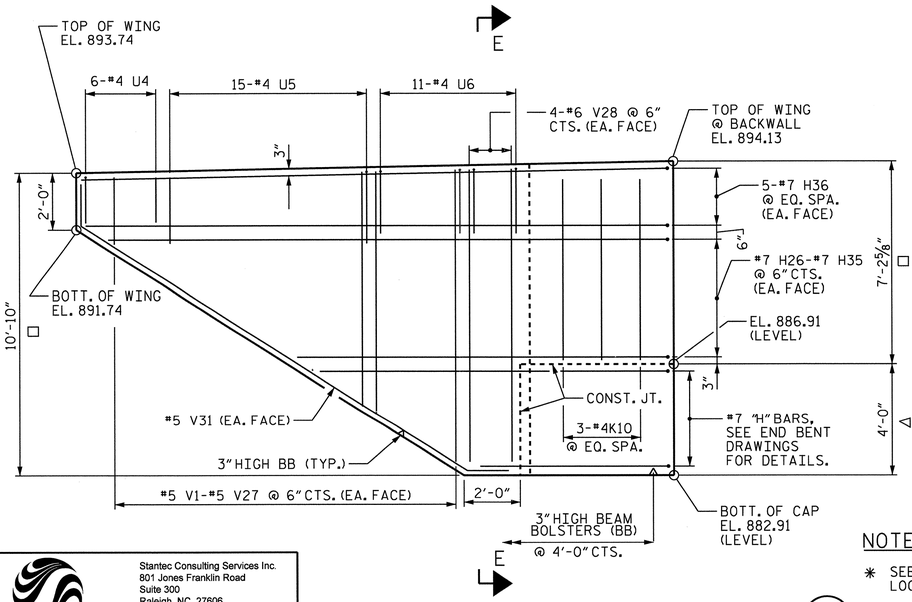

ELEVATION OF LEFT WING (W3)

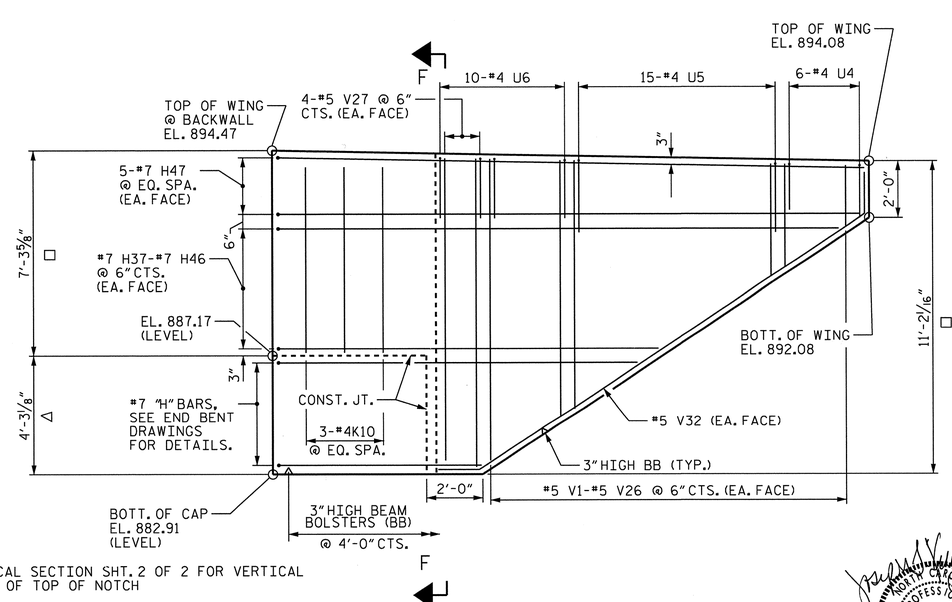

ELEVATION OF RIGHT WING (W4)

NOTES

* SEE TYPICAL SECTION SHT. 2 OF 2 FOR VERTICAL LOCATION OF TOP OF NOTCH
□ END BENT CAP - SUBSTRUCTURE POUR 1
△ DIAPHRAGM AND WING WALL - SUPERSTRUCTURE POUR 3

LAP #4 U4 THRU #4 U6 BARS W/ #5 "V" BARS ON EA. FACE OF WING

Stantec Consulting Services Inc.
801 Jones Franklin Road
Suite 300
Raleigh, NC 27606
Tel. (919) 851-6866
Fax. (919) 851-7024
www.stantec.com
License No. F-0672

DRAWN BY : V. T. DOAN DATE : 05-25-12
CHECKED BY : S. S. YUEN DATE : 06-15-12

DESIGN ENGINEER OF RECORD: J. T. KELVINGTON DATE : 03-28-13

PROJECT NO. U-2524C
GUILFORD COUNTY
STATION: 274+26.98 -L-

SHEET 3 of 3

STATE OF NORTH CAROLINA
DEPARTMENT OF TRANSPORTATION
RALEIGH

SUPERSTRUCTURE

PLAN OF SPAN DETAILS
WING WALL (END BENT 2)

REVISIONS						SHEET NO.
NO.	BY:	DATE:	NO.	BY:	DATE:	S-509
1			3			TOTAL SHEETS
2			4			836

SEAL 13406 ENGINEER JOSEPH T. KELVINGTON NORTH CAROLINA PROFESSIONAL

U:\Structures\Y Fleming Rd\Drawing\Final\U-2524C_SD_EB2_2.dgn 6/7/2013 2:25:27 PM jgeile STRUCTURES PEN TABLE.tbl Raleigh PDF Creator (Full).pit

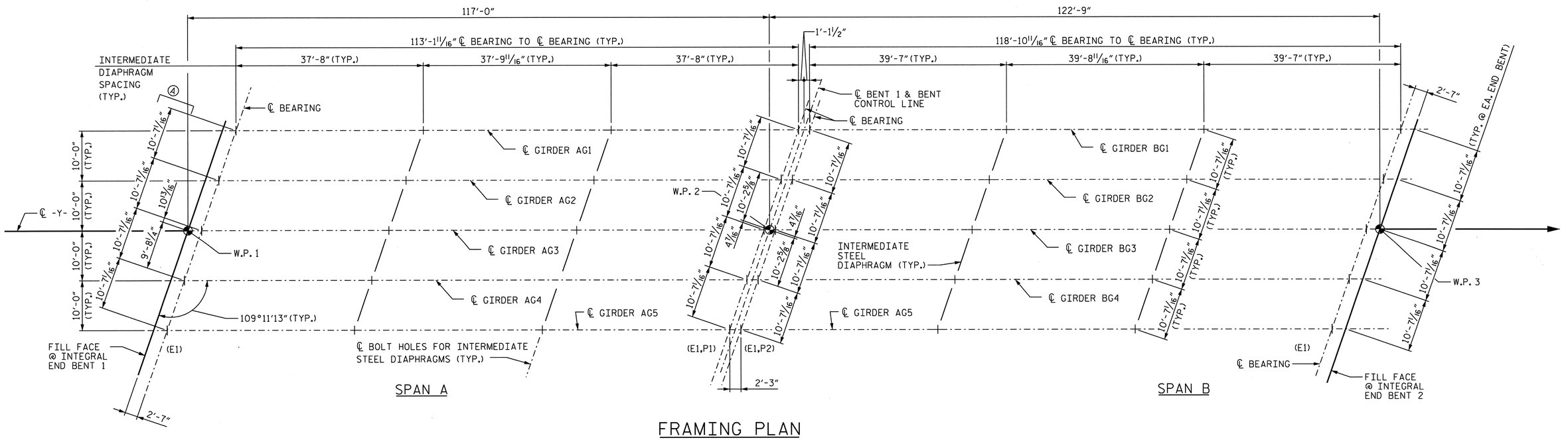

FRAMING PLAN

NOTES:

(E1, P1, AND P2) DENOTES ELASTOMERIC BEARING OR SOLE PLATE. SEE "ELASTOMERIC BEARING DETAILS".

SEE TYPICAL SECTION FOR END BENT DIAPHRAGM AND INTERIOR BENT DIAPHRAGM DETAILS.

REFER TO "PLAN OF SPAN DETAILS" FOR BENT & END BENT DIAPHRAGMS.

ALL DIMENSIONS ARE HORIZONTAL OR VERTICAL UNLESS NOTED.

Ⓐ BEARING TO BEARING DIMENSIONS ARE TYP. @ EA. END BENT.

PROJECT NO. U-2524C

GUILFORD COUNTY

STATION: 274+26.98 -L-

STATE OF NORTH CAROLINA
DEPARTMENT OF TRANSPORTATION
RALEIGH

SUPERSTRUCTURE

FRAMING PLAN

REVISIONS						SHEET NO.
NO.	BY:	DATE:	NO.	BY:	DATE:	S-510
1			3			TOTAL SHEETS
2			4			836

Stantec
Stantec Consulting Services Inc.
801 Jones Franklin Road
Suite 300
Raleigh, NC 27606
Tel. (919) 851-6866
Fax. (919) 851-7024
www.stantec.com
License No. F-0672

DRAWN BY : V. T. DOAN DATE : 05-25-12
CHECKED BY : T. R. DUDECK DATE : 06-15-12
DESIGN ENGINEER OF RECORD: J. T. KELVINGTON DATE : 03-28-13

NORTH CAROLINA PROFESSIONAL SEAL 13406 ENGINEER JOSEPH T. KELVINGTON 03/28/13

U:\Structures\Y Fleming Rd\Drawing\Final\U-2524C_SD_FP.dgn 6/7/2013 2:25:29 PM jgeile STRUCTURES PEN TABLE.tbl Raleigh PDF Creator (Full).plt

U:\Structures\Y Fleming Rd\Drawing\Final\U-2524C_GDR.pcg.dgn 6/7/2013 2:25:35 PM jgelle STRUCTURES PEN TABLE.tbl Raleigh PDF Creator (Full).plt

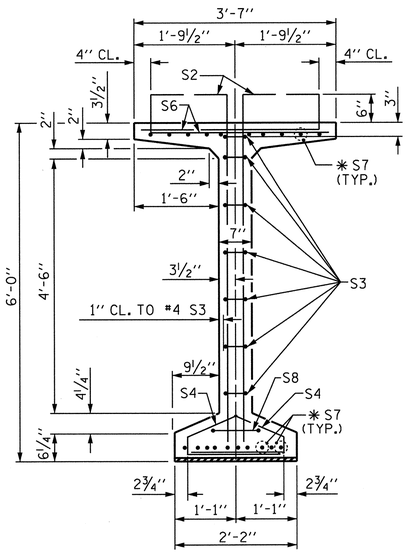

SECTION A-A

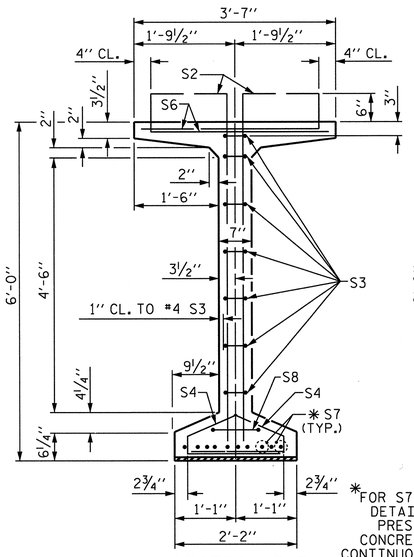

SECTION B-B

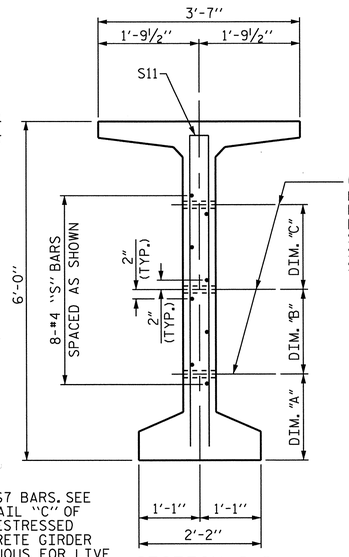

SECTION C-C

* FOR S7 BARS. SEE DETAIL "C" OF PRESTRESSED CONCRETE GIRDER CONTINUOUS FOR LIVE LOAD DETAILS SHEET

(S1, S6, AND S9 BARS NOT SHOWN)

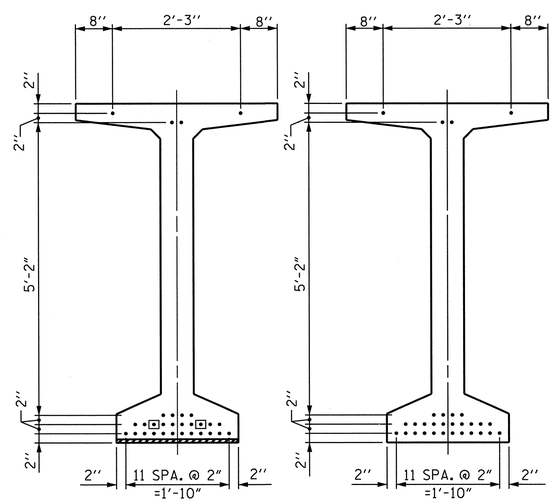

0.6" Ø LOW RELAXATION STRAND LAYOUT

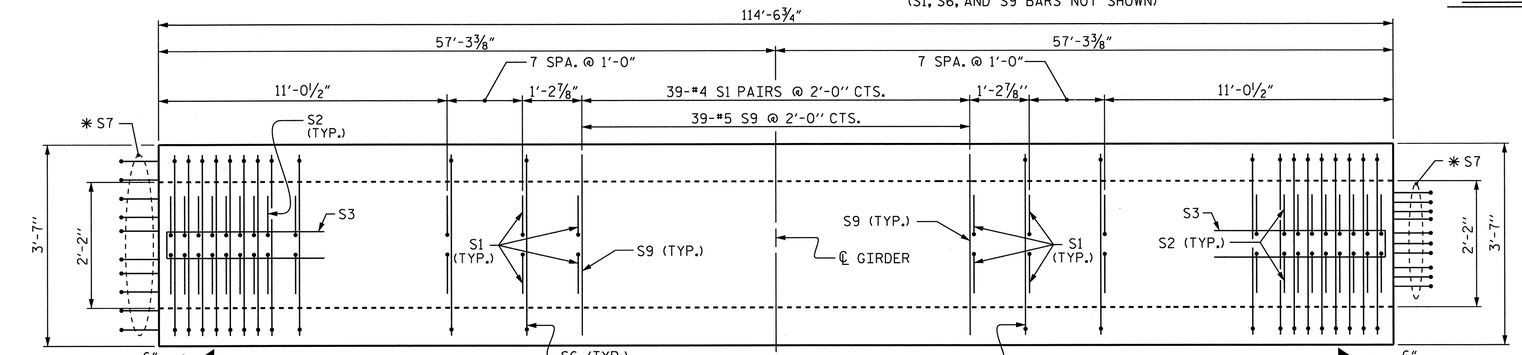

PLAN OF GIRDER

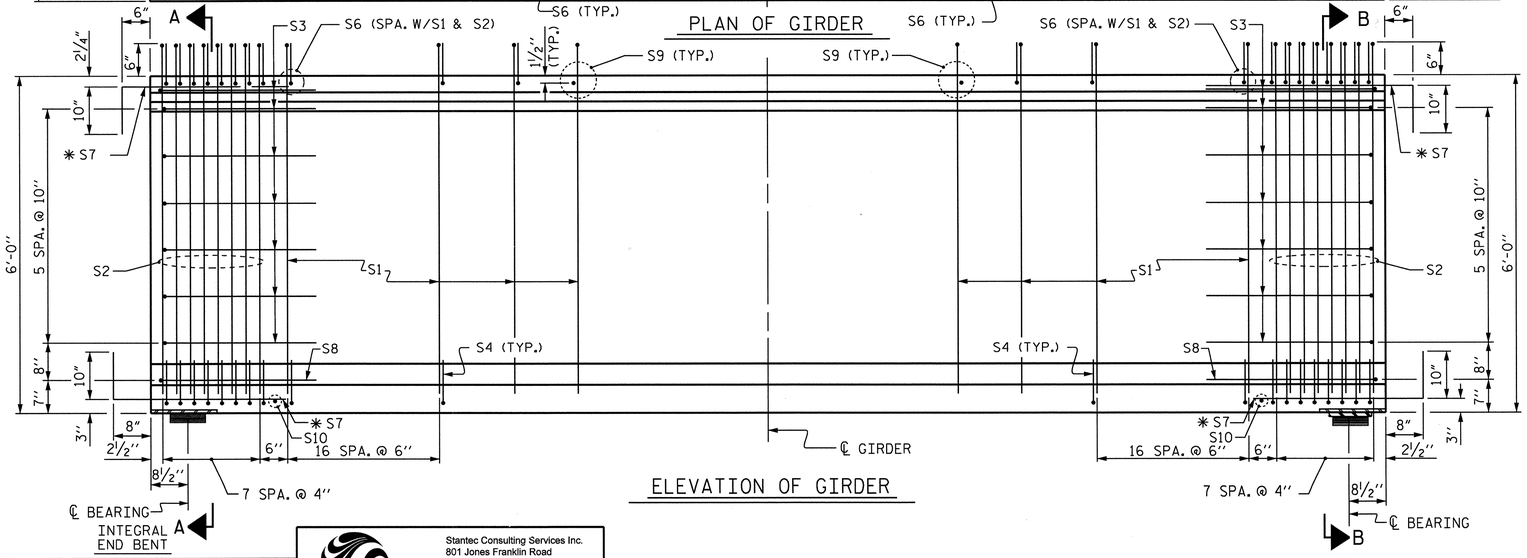

ELEVATION OF GIRDER

DEBONDING LEGEND

- ● FULLY BONDED STRANDS
- ▣ STRANDS DEBONDED FOR 4'-0" FROM END OF GIRDER

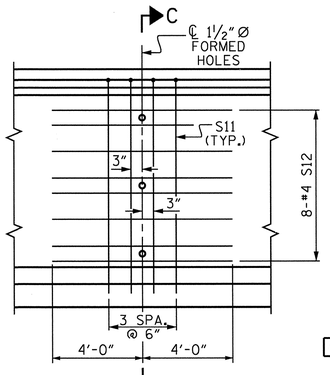

PARTIAL ELEVATION

SHOWING INTERMEDIATE STEEL DIAPHRAGM REINFORCING STEEL FOR GIRDERS AG1 THRU AG5

FOR BEVELED END OF GIRDER SEE "PRESTRESSED CONCRETE GIRDER CONTINUOUS FOR LIVE LOAD DETAILS", SHT. 3 OF 3

0.6" Ø L. R. GRADE 270 STRANDS

AREA (SQUARE INCHES)	ULTIMATE STRENGTH (LBS. PER STRAND)	APPLIED PRESTRESS (LBS. PER STRAND)
0.217	58,600	43,950

REINFORCING STEEL FOR ONE GDR

BAR	NUMBER	SIZE	TYPE	LENGTH	WEIGHT
S1	174	#4	1	6'-10"	794
S2	32	#5	1	6'-10"	228
S3	14	#4	2	8'-5"	79
S4	100	#4	3	3'-0"	200
S6	128	#5	4	4'-4"	579
* S7	40	#5	STR	6'-1"	254
S8	2	#5	2	9'-0"	19
S9	39	#5	STR	3'-3"	132
S10	2	#3	STR	1'-10"	1
S11	8	#5	2	11'-8"	97
S12	16	#4	STR	8'-0"	86

* NOTE: S7 BARS SHALL BE BENT BEFORE SHIPMENT. HEAT BENDING SHALL NOT BE ALLOWED.

BAR TYPES

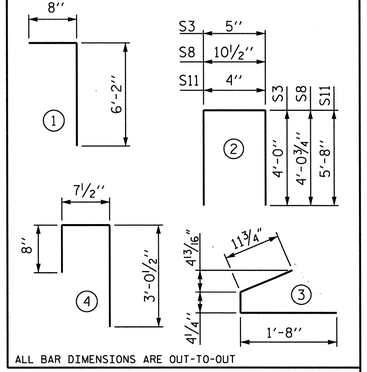

ALL BAR DIMENSIONS ARE OUT-TO-OUT

QUANTITIES FOR ONE GIRDER

	REINFORCING STEEL	8,000 PSI CONCRETE	0.6" Ø L.R. STRANDS
	LB.	C.Y.	No.
GIRDER	2,469	24.5	30

GIRDERS REQUIRED

	NUMBER	LENGTH	TOTAL LENGTH
AG1-AG5	5	114'-6¾"	572'-9¾"

PROJECT NO. U-2524C

GUILFORD COUNTY

STATION: 274+26.98 -L-

SHEET 1 OF 3

STATE OF NORTH CAROLINA
DEPARTMENT OF TRANSPORTATION
RALEIGH

STANDARD

72" PRESTRESSED CONCRETE MODIFIED BULB TEE CONTINUOUS FOR LIVE LOAD SPAN A

REVISIONS						SHEET NO.
NO.	BY:	DATE:	NO.	BY:	DATE:	S-511
1			3			TOTAL SHEETS
2			4			836

ASSEMBLED BY : C. B. BAKER DATE : 05-03-12
CHECKED BY : J. T. KELVINGTON DATE : 05-03-12

DRAWN BY : EEM 2/6/97
CHECKED BY : VAP 2/6/97

REV. 10/17/00 RWW/LES
REV. 5/1/06R TLA/GM
REV. 10/1/11 MAA/GM

Stantec

Stantec Consulting Services Inc.
801 Jones Franklin Road
Suite 300
Raleigh, NC 27606
Tel. (919) 851-6866
Fax. (919) 851-7024
www.stantec.com
License No. F-0672

DESIGN ENGINEER OF RECORD: J. T. KELVINGTON DATE : 03-28-13

STD. NO. PCG8 (Sht. 2)

Raleigh PDF Creator (Full).plt
U:\Structures\Y Fleming Rd\Drawing\Final\U-2524C_GDR.pcg_2.dgn 6/7/2013 2:25:41 PM jgelle STRUCTURES PEN TABLE.tbl

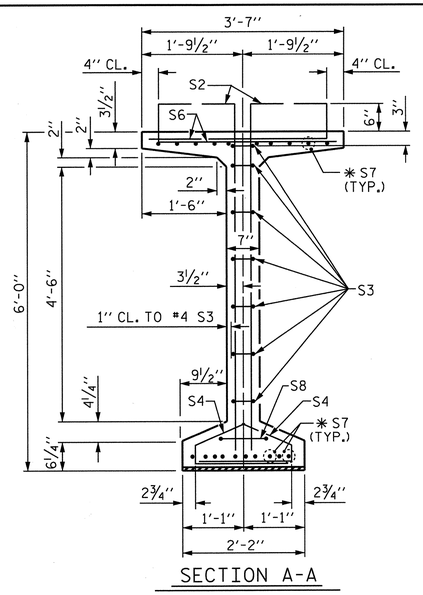

SECTION A-A

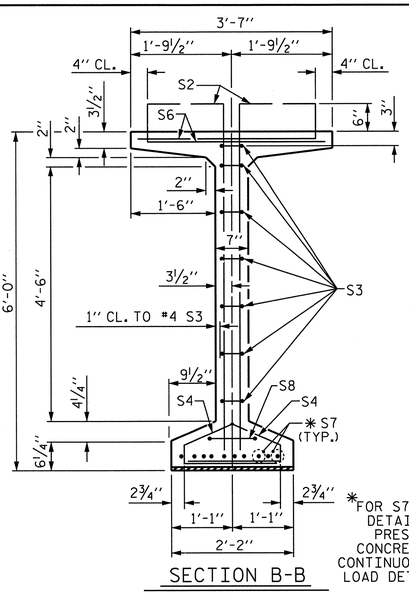

SECTION B-B

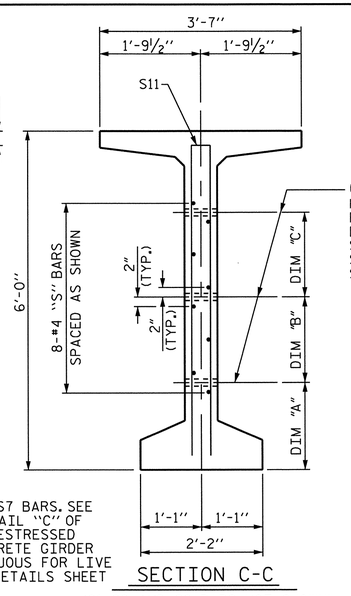

SECTION C-C

✱FOR S7 BARS, SEE DETAIL "C" OF PRESTRESSED CONCRETE GIRDER CONTINUOUS FOR LIVE LOAD DETAILS SHEET

(S1, S6, AND S9 BARS NOT SHOWN)

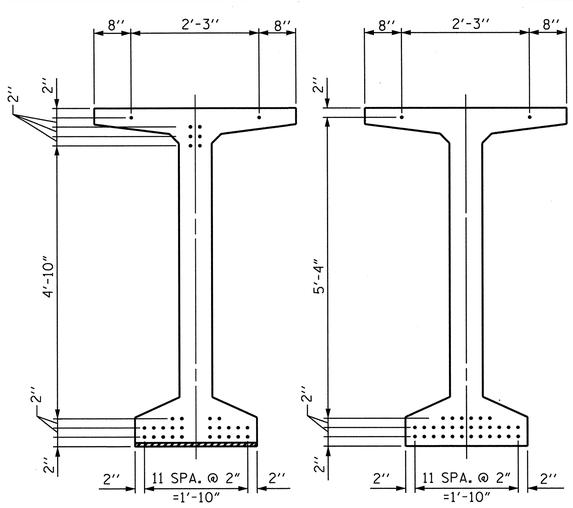

AT END OF GIRDER

AT ℄ OF GIRDER

0.6" Ø LOW RELAXATION STRAND LAYOUT

DEBONDING LEGEND

● FULLY BONDED STRANDS

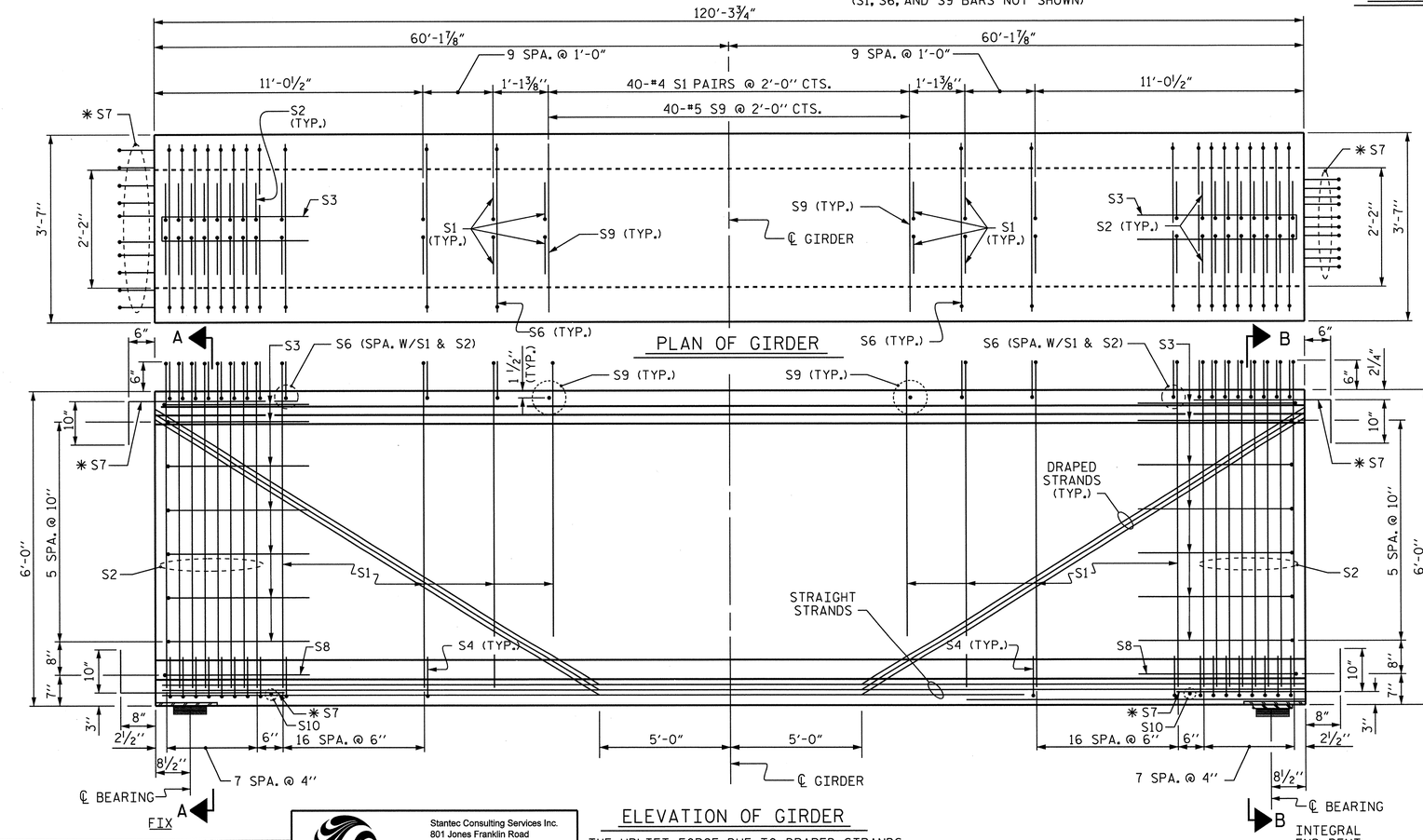

ELEVATION OF GIRDER

THE UPLIFT FORCE DUE TO DRAPED STRANDS IS 25 KIPS AT EACH HOLD DOWN POINT.

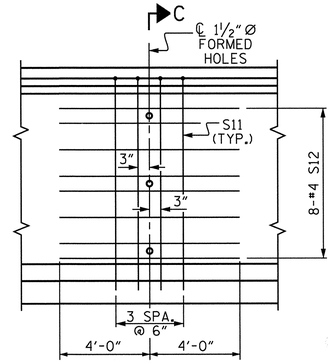

PARTIAL ELEVATION

SHOWING INTERMEDIATE STEEL DIAPHRAGM REINFORCING STEEL FOR GIRDERS BG1 THRU BG5

FOR BEVELED END OF GIRDER SEE "PRESTRESSED CONCRETE GIRDER CONTINUOUS FOR LIVE LOAD DETAILS", SHT. 3 OF 3

0.6" Ø L. R. GRADE 270 STRANDS

AREA (SQUARE INCHES)	ULTIMATE STRENGTH (LBS. PER STRAND)	APPLIED PRESTRESS (LBS. PER STRAND)
0.217	58,600	43,950

REINFORCING STEEL FOR ONE GDR

BAR	NUMBER	SIZE	TYPE	LENGTH	WEIGHT
S1	184	#4	1	6'-10"	840
S2	32	#5	1	6'-10"	228
S3	14	#4	2	8'-5"	79
S4	100	#4	3	3'-0"	200
S6	136	#5	4	4'-4"	615
✱S7	40	#5	STR	6'-1"	254
S8	2	#5	2	9'-0"	19
S9	40	#5	STR	3'-3"	136
S10	2	#3	STR	1'-10"	1
S11	8	#5	2	11'-8"	97
S12	16	#4	STR	8'-0"	86

✱NOTE: S7 BARS SHALL BE BENT BEFORE SHIPMENT. HEAT BENDING SHALL NOT BE ALLOWED.

BAR TYPES

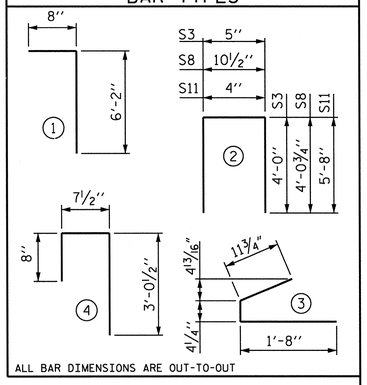

ALL BAR DIMENSIONS ARE OUT-TO-OUT

QUANTITIES FOR ONE GIRDER

	REINFORCING STEEL	8,000 PSI CONCRETE	0.6" Ø L.R. STRANDS
	LB.	C.Y.	No.
GIRDER	2,555	25.8	32

GIRDERS REQUIRED

	NUMBER	LENGTH	TOTAL LENGTH
BG1-BG5	5	120'-3¾"	601'-6¾"

PROJECT NO. U-2524C

GUILFORD COUNTY

STATION: 274+26.98 -L-

SHEET 2 OF 3

STATE OF NORTH CAROLINA
DEPARTMENT OF TRANSPORTATION
RALEIGH

STANDARD

72" PRESTRESSED CONCRETE MODIFIED BULB TEE CONTINUOUS FOR LIVE LOAD SPAN B

NORTH CAROLINA PROFESSIONAL SEAL 13406 ENGINEER JOSEPH T. KELVINGTON

REVISIONS						SHEET NO.
NO.	BY:	DATE:	NO.	BY:	DATE:	S-512
1			3			TOTAL SHEETS
2			4			83

ASSEMBLED BY : C. B. BAKER	DATE : 05-03-12	
CHECKED BY : J. T. KELVINGTON	DATE : 05-03-12	
DRAWN BY : EEM 2/6/97	REV. 10/17/00	RWW/LES
CHECKED BY : VAP 2/6/97	REV. 5/1/06R	TLA/GM
	REV. 10/1/11	MAA/GM

Stantec

Stantec Consulting Services Inc.
801 Jones Franklin Road
Suite 300
Raleigh, NC 27606
Tel. (919) 851-6866
Fax. (919) 851-7024
www.stantec.com
License No. F-0672

DESIGN ENGINEER OF RECORD: J. T. KELVINGTON DATE : 03-28-13

STD. NO. PCG8 (Sht. 2)

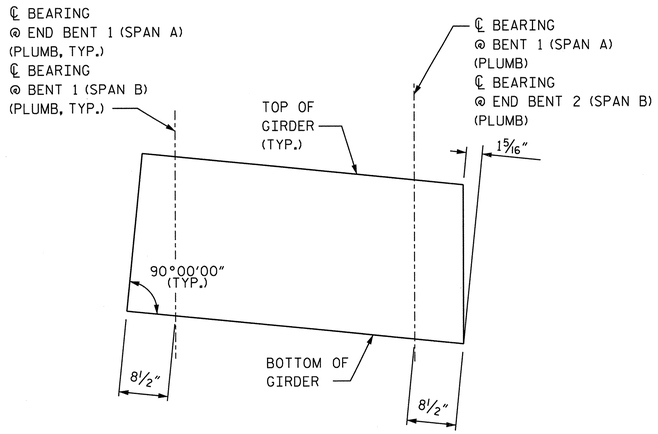

GIRDER BEVEL DETAIL

SECTION "G"

SECTION "F"

(SEE NOTES)

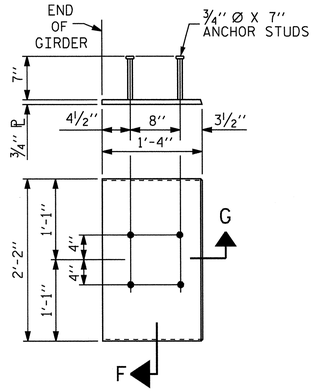

EMBEDDED PLATE "B-1" DETAILS FOR 72" MODIFIED BULB TEES

(2 REQ'D PER GIRDER)

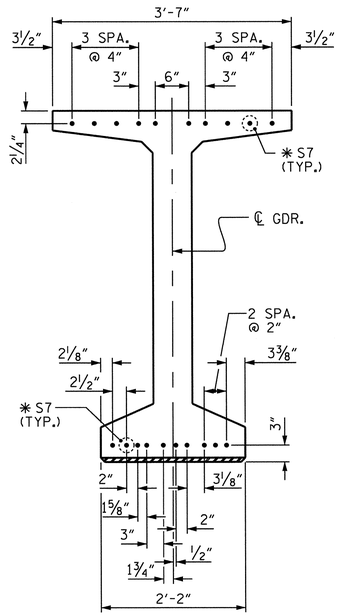

DETAIL "C"

NOTES

ALL PRESTRESSING STRANDS SHALL BE 7-WIRE LOW-RELAXATION GRADE 270 STRANDS AND SHALL CONFORM TO AASHTO M203 EXCEPT FOR SAMPLING REQUIREMENTS WHICH SHALL BE IN ACCORDANCE WITH THE STANDARD SPECIFICATIONS.

ALL REINFORCING STEEL SHALL BE GRADE 60.

APPLY EPOXY PROTECTIVE COATING TO END OF GIRDER SURFACES INDICATED IN ELEVATION VIEW.

EMBEDDED PLATE "B-1" SHALL BE GALVANIZED IN ACCORDANCE WITH THE STANDARD SPECIFICATIONS. BEVEL EDGES OF PLATE "B-1" TO GIVE CLOSE FIT BUT NOT TIGHT FIT TO STEEL CASTING FORM.

ANCHOR STUDS SHALL CONFORM TO AASHTO M169 GRADES 1010 THROUGH 1020 OR APPROVED EQUAL, AND SHALL MEET THE TYPE "B" REQUIREMENTS OF SUBSECTION 7.3 OF THE ANSI/AASHTO/AWS D1.5 BRIDGE WELDING CODE.

AT ENDS OF GIRDERS TO BE EMBEDDED IN CONCRETE DIAPHRAGMS OR END WALLS, PRESTRESSING STRANDS MAY EXTEND A MAXIMUM OF 2" BEYOND THE GIRDER ENDS. OTHERWISE, PRESTRESSING STRANDS SHALL BE CUT FLUSH WITH THE GIRDER ENDS.

THE TRANSFER OF LOAD FROM THE ANCHORAGES TO THE GIRDER SHALL BE DONE WHEN CONCRETE HAS REACHED A COMPRESSIVE STRENGTH OF NOT LESS THAN 6000 PSI.

DEPENDING ON THE TYPE OF SYSTEM USED TO SUPPORT THE DECK SLAB FORMS, PRESET ANCHORS MAY BE NECESSARY IN THE PRESTRESSED CONCRETE GIRDER.

THE TOP SURFACE OF THE GIRDER, EXCLUDING THE OUTSIDE 4", SHALL BE RAKED TO A DEPTH OF 1/4".

WHEN DRAPED STRANDS ARE DETAILED, THE LONGITUDINAL LOCATION OF THE HOLD DOWN DEVICES SHALL BE WITHIN 6" OF THE LOCATION SHOWN AND THE CENTER OF GRAVITY OF THE GROUP OF DRAPED STRANDS SHALL BE LOCATED WITHIN 1/2" OF THE THEORETICAL LOCATION SHOWN.

A 2" x 2" CHAMFER IS ALLOWED AT THE INTERSECTION OF THE WEB AND THE BOTTOM FLANGE OF THE 72" MODIFIED BULB TEES.

THE CONTRACTOR HAS THE OPTION TO PROVIDE, AT NO ADDITIONAL COST TO THE DEPARTMENT, 2 ADDITIONAL STRANDS AT THE TOP OF THE GIRDER TO FACILITATE TYING OF THE REINFORCING STEEL. THESE STRANDS SHALL BE PULLED TO A LOAD OF 4500 lbs.

Stantec
Stantec Consulting Services Inc.
801 Jones Franklin Road
Suite 300
Raleigh, NC 27606
Tel. (919) 851-6866
Fax. (919) 851-7024
www.stantec.com
License No. F-0672

ASSEMBLED BY : J. B. GEILE	DATE : 05-03-12
CHECKED BY : T. R. DUDECK	DATE : 05-03-12
DRAWN BY : ELR 11/91	REV. 7/10/01RR LES/RDR
CHECKED BY : GRP 11/91	REV. 5/1/06 TLA/GM
	REV. 10/1/11 MAA/GM

DESIGN ENGINEER OF RECORD: J. T. KELVINGTON DATE : 03-28-13

NORTH CAROLINA PROFESSIONAL SEAL 13406 ENGINEER JOSEPH T. KELVINGTON

PROJECT NO. U-2524C

GUILFORD COUNTY

STATION: 274+26.98 -L-

SHEET 3 of 3

STATE OF NORTH CAROLINA
DEPARTMENT OF TRANSPORTATION
RALEIGH

STANDARD

PRESTRESSED CONCRETE GIRDER CONTINUOUS FOR LIVE LOAD DETAILS

REVISIONS						SHEET NO.
NO.	BY:	DATE:	NO.	BY:	DATE:	S-513
1			3			TOTAL SHEETS
2			4			836

STD. NO. PCG9 (Sht. 5a)

U:\Structures\V Fleming Rd\Drawing\Final\U-2524C_GDR_pcg_3.dgn 6/7/2013 2:25:43 PM jgeile STRUCTURES PEN TABLE.tbl Raleigh PDF Creator (Full).plt

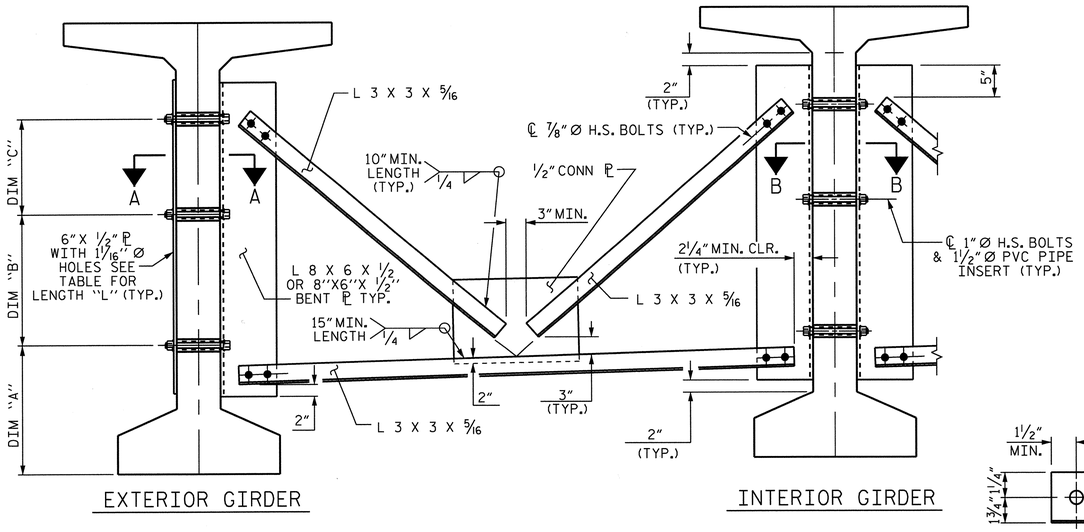

EXTERIOR GIRDER

INTERIOR GIRDER

PART SECTION AT INTERMEDIATE DIAPHRAGM

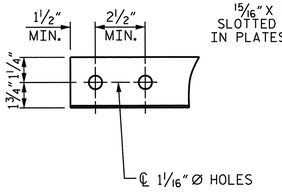

ANGLE END

(L 3 X 3 X 5/16)

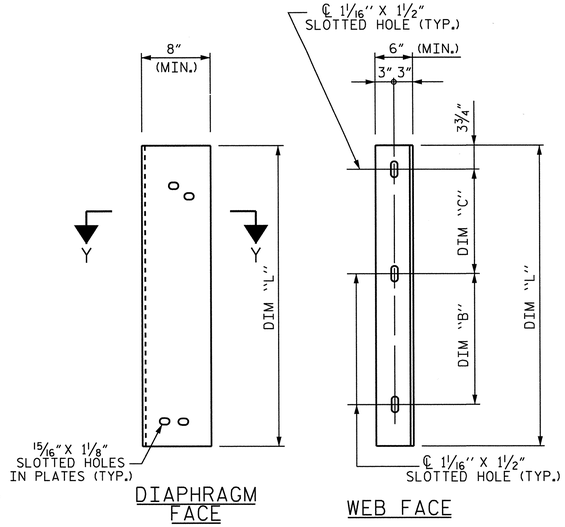

DIAPHRAGM FACE

WEB FACE

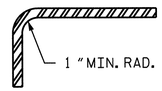

SECTION Y-Y

CONNECTION PLATE DETAIL

STRUCTURAL STEEL NOTES

ALL INTERMEDIATE DIAPHRAGM STEEL AND CONNECTOR PLATES SHALL BE AASHTO M270 GRADE 50 OR APPROVED EQUAL.

TENSION ON THE ASTM A325 BOLTS THROUGH THE ANGLE MEMBER SHALL BE CALIBRATED USING DIRECT TENSION INDICATOR WASHERS IN ACCORDANCE WITH THE STANDARD SPECIFICATIONS.

TENSION ON THE ASTM A449 BOLTS THROUGH THE GIRDER WEB SHALL BE SNUG TIGHTENED FOLLOWED BY AN ADDITIONAL 1/4 TURN.

THE PLATES, BENT PLATES, AND ANGLES SHALL BE GALVANIZED OR METALLIZED IN ACCORDANCE WITH THE STANDARD SPECIFICATIONS. FOR THERMAL SPRAYED COATINGS (METALLIZATION), SEE SPECIAL PROVISIONS.

FOR METALLIZATION, APPLY AN 8 MIL THICK 99.99 PERCENT ZINC (W-Zn-1) THERMAL SPRAYED COATING WITH A 0.5 MIL THICK SEAL COAT TO ALL STEEL DIAPHRAGM SURFACES IN ACCORDANCE WITH THE THERMAL SPRAYED COATINGS SPECIAL PROVISION AND SECTION 442 OF THE STANDARD SPECIFICATIONS.

GALVANIZE THE HIGH STRENGTH BOLTS, NUTS, WASHERS AND DIRECT TENSION INDICATORS IN ACCORDANCE WITH THE STANDARD SPECIFICATIONS.

USE AN ASTM F436 HARDENED WASHER WITH STANDARD AND SLOTTED HOLES UNDER EACH BOLT HEAD AND NUT.

FOR BOLTS THROUGH THE GIRDER WEB, PROVIDE SUFFICIENT LENGTH OF THREADS ON ALL BOLTS TO ACCOMMODATE WASHERS AND THE THICKNESS OF CONNECTING MEMBER PLUS AT LEAST 1/4" PROJECTION BEYOND THE NUT.

INTERMEDIATE DIAPHRAGM ASSEMBLY SHALL COMPLY WITH SECTION 1072 OF THE STANDARD SPECIFICATIONS.

SUBMIT TWO SETS OF WORKING DRAWINGS FOR THE INTERMEDIATE DIAPHRAGM ASSEMBLY FOR REVIEW, COMMENTS AND ACCEPTANCE. AFTER REVIEW, COMMENTS, AND ACCEPTANCE, SUBMIT SEVEN SETS FOR DISTRIBUTION.

IN THE EXTERIOR BAYS, PLACE TEMPORARY STRUTS BETWEEN PRESTRESSED GIRDERS ADJACENT TO THE STEEL DIAPHRAGMS. STRUTS SHALL REMAIN IN PLACE 3 DAYS AFTER CONCRETE IS PLACED.

THE COST OF THE STEEL DIAPHRAGMS AND ASSEMBLIES SHALL BE INCLUDED IN THE UNIT PRICE BID FOR PRESTRESSED CONCRETE GIRDERS.

TABLE

GIRDER TYPE	DIM "A"	DIM "B"	DIM "C"	DIM "L"
72" BULB TEE	1'-4 1/4"	1'-9 1/4"	1'-9 1/4"	4'-2"

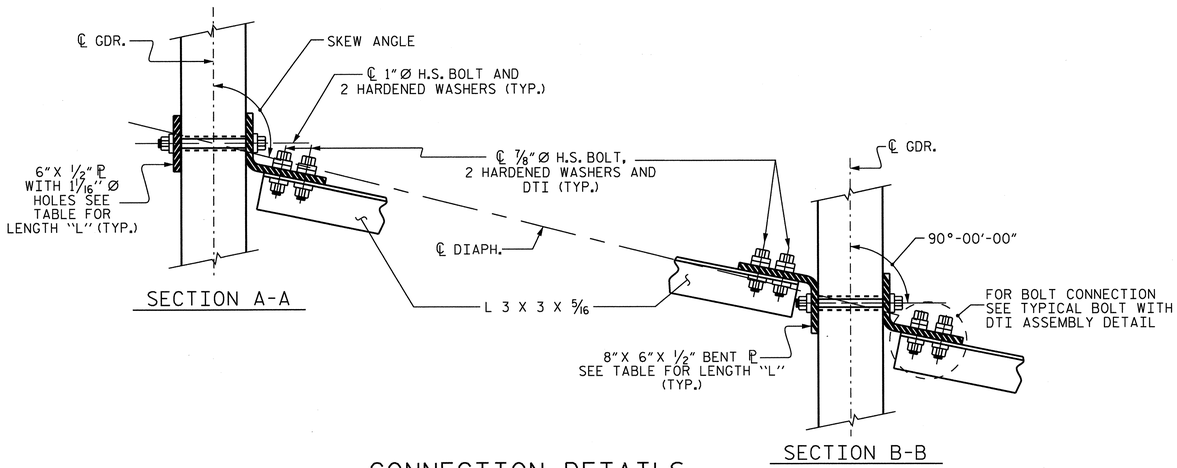

SECTION A-A

SECTION B-B

CONNECTION DETAILS

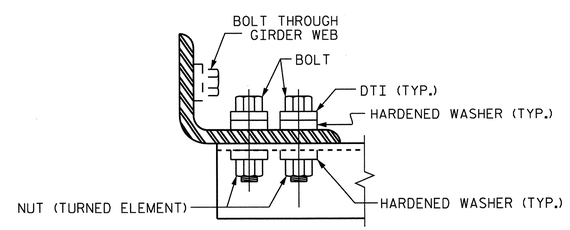

BOLT WITH DTI ASSEMBLY DETAIL

PROJECT NO. U-2524C

GUILFORD COUNTY

STATION: 274+26.98 -L-

STATE OF NORTH CAROLINA
DEPARTMENT OF TRANSPORTATION
RALEIGH

STANDARD INTERMEDIATE STEEL DIAPHRAGMS FOR 63" & 72" MODIFIED BULB TEE PRESTRESSED CONCRETE GIRDERS

REVISIONS						SHEET NO.
NO.	BY:	DATE:	NO.	BY:	DATE:	S-514
1			3			TOTAL SHEETS
2			4			834

STD. NO. PCG11

Stantec Consulting Services Inc.
801 Jones Franklin Road
Suite 300
Raleigh, NC 27606
Tel. (919) 851-6866
Fax. (919) 851-7024
www.stantec.com
License No. F-0672

ASSEMBLED BY : J. B. GEILE	DATE : 05-03-12
CHECKED BY : T. R. DUDECK	DATE : 05-03-12
DRAWN BY : RWW 11/09	ADDED 11/23/09R
CHECKED BY : GM 11/09	REV. 10/1/11 MAA/GM

DESIGN ENGINEER OF RECORD: J. T. KELVINGTON DATE : 03-28-13

NORTH CAROLINA PROFESSIONAL SEAL 13406 ENGINEER JOSEPH T. KELVINGTON

U:\Structures\Y Fleming Rd\Drawing\Final\U-2524C_CDR_pcg_4.dgn 6/7/2013 2:25:46 PM jgeile STRUCTURES PEN TABLE.tbl Raleigh PDF Creator (Full).pit

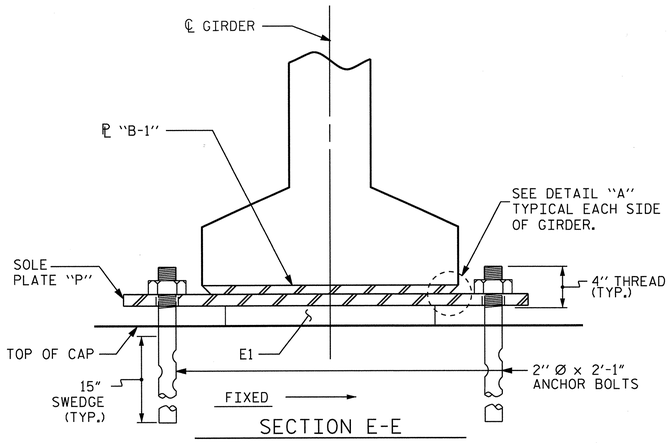

SECTION E-E

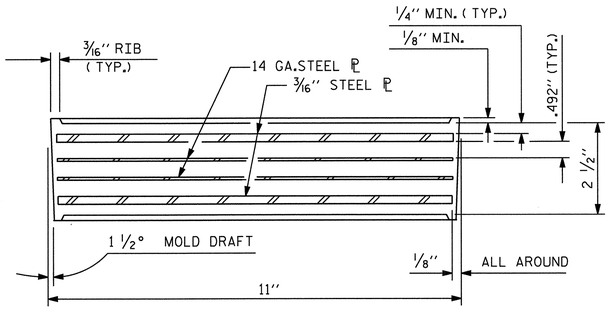

TYPICAL SECTION OF ELASTOMERIC BEARINGS

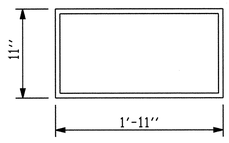

E1 (20 REQ'D)

PLAN VIEW OF ELASTOMERIC BEARING

TYPE VI

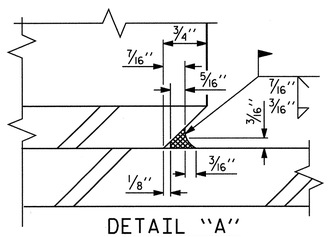

DETAIL "A"

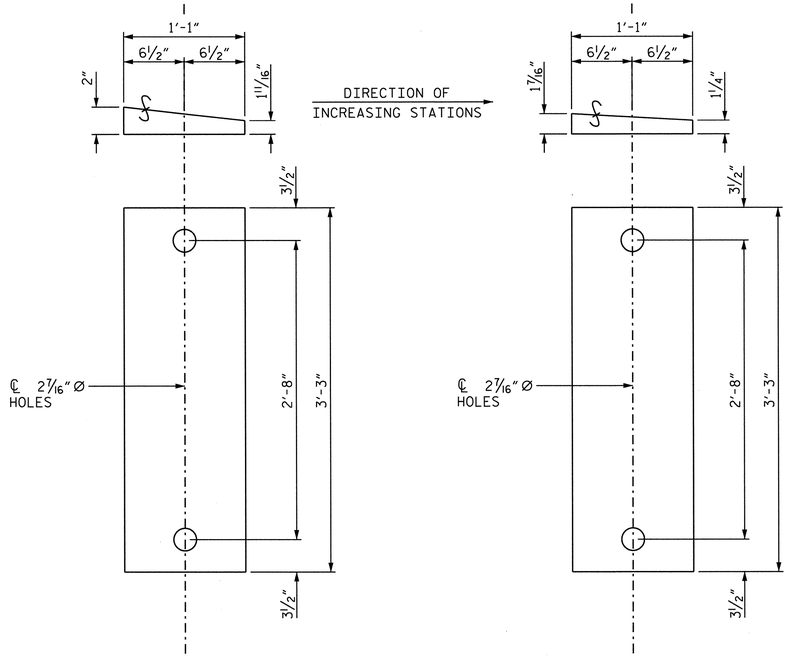

SOLE PLATE DETAILS ("P")

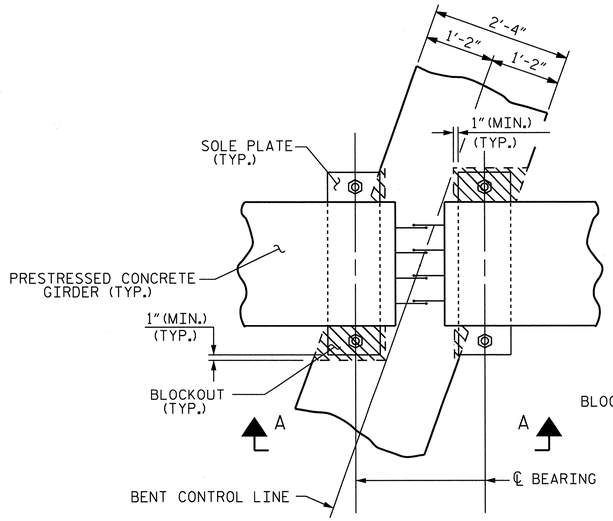

PLAN

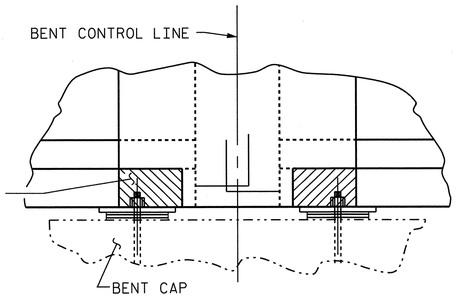

SECTION A-A

BENT DIAPHRAGM BLOCK-OUT DETAIL

NOTES

AT ALL FIXED POINTS OF SUPPORT, NUTS FOR ANCHOR BOLTS ARE TO BE TIGHTENED FINGER TIGHT AND THEN BACKED OFF 1/2 TURN. THE THREAD OF THE NUT AND BOLT SHALL THEN BE BURRED WITH A SHARP POINTED TOOL.

STEEL SOLE PLATES, ANCHOR BOLTS, NUTS, AND WASHERS SHALL BE GALVANIZED IN ACCORDANCE WITH THE STANDARD SPECIFICATIONS.

PRIOR TO WELDING, GRIND THE GALVANIZED SURFACE OF THE PORTION OF THE EMBEDDED PLATE AND SOLE PLATE THAT ARE TO BE WELDED. AFTER WELDING, DAMAGED GALVANIZED SURFACES SHALL BE REPAIRED IN ACCORDANCE WITH THE STANDARD SPECIFICATIONS.

WHEN WELDING THE SOLE PLATE TO THE EMBEDDED PLATE IN THE GIRDER, USE TEMPERATURE INDICATING WAX PENS, OR OTHER SUITABLE MEANS, TO ENSURE THAT THE TEMPERATURE OF THE SOLE PLATE DOES NOT EXCEED 300°F. TEMPERATURES ABOVE THIS MAY DAMAGE THE ELASTOMER.

SOLE PLATE "P", BOLTS, NUTS, AND WASHERS SHALL BE INCLUDED IN THE PAY ITEM FOR PRESTRESSED CONCRETE GIRDERS.

ANCHOR BOLTS SHALL MEET THE REQUIREMENTS OF ASTM A449. NUTS SHALL MEET THE REQUIREMENTS OF AASHTO M291-DH OR AASHTO M292-2H. WASHERS SHALL MEET THE REQUIREMENTS OF AASHTO M293. NO SHOP DRAWINGS ARE REQUIRED FOR ANCHOR BOLTS, NUTS AND WASHERS. SHOP INSPECTION IS REQUIRED.

ALL SURFACES OF BEARING PLATES SHALL BE SMOOTH AND STRAIGHT.

ALL STEEL SOLE PLATES AND REINFORCING PLATES FOR ELASTOMERIC BEARINGS SHALL BE AASHTO M270 GRADE 36.

FOR STEEL REINFORCED ELASTOMERIC BEARING SEE SPECIAL PROVISIONS.

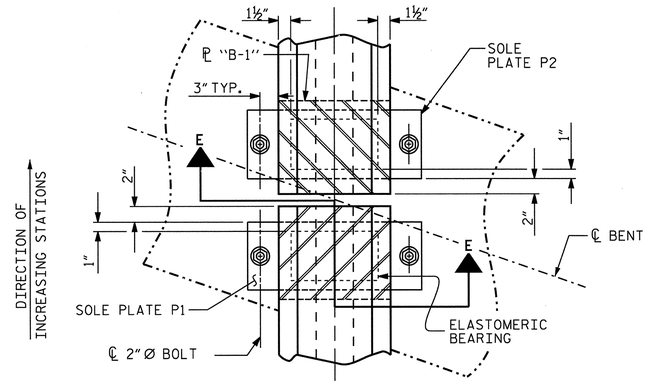

PLAN

PROJECT NO. U-2524C

GUILFORD COUNTY

STATION: 274+26.98 -L-

STATE OF NORTH CAROLINA
DEPARTMENT OF TRANSPORTATION
RALEIGH

SUPERSTRUCTURE

ELASTOMERIC BEARING DETAILS

REVISIONS						SHEET NO.
NO.	BY:	DATE:	NO.	BY:	DATE:	S-515
1			3			TOTAL SHEETS
2			4			836

NORTH CAROLINA PROFESSIONAL SEAL 13406 ENGINEER JOSEPH T. KELVINGTON

Stantec Consulting Services Inc.
801 Jones Franklin Road
Suite 300
Raleigh, NC 27606
Tel. (919) 851-6866
Fax. (919) 851-7024
www.stantec.com
License No. F-0672

DRAWN BY : V. T. DOAN DATE : 05-25-12
CHECKED BY : J. T. KELVINGTON DATE : 06-15-12

DESIGN ENGINEER OF RECORD: J. T. KELVINGTON DATE : 03-28-13

U:\Structures\V Fleming Rd\Drawing\Final\U-2524C_SD_EBD.dgn 6/7/2013 2:25:48 PM Jgelle STRUCTURES PEN TABLE.tbl Raleigh PDF Creator (Full).plt

SPAN A

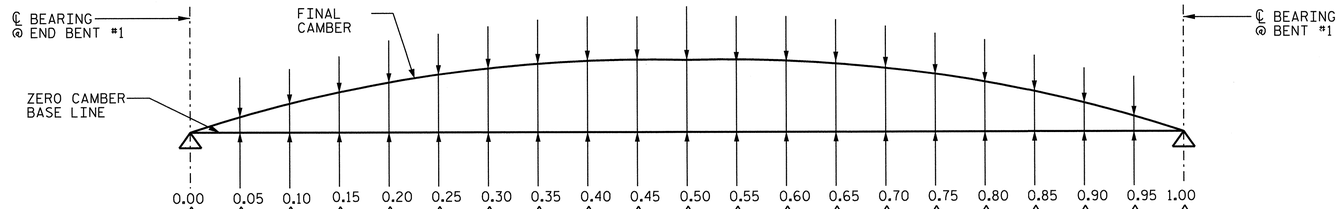

GIRDER 1 & 5

CAMBER (GIRDER ALONE IN PLACE) ↑	0.000	0.050	0.100	0.135	0.170	0.193	0.216	0.229	0.242	0.246	0.250	0.246	0.242	0.229	0.216	0.193	0.170	0.135	0.100	0.050	0.000
DEFLEC. DUE TO SUPERIMPOSED DL ** ↓	0.000	0.017	0.035	0.051	0.068	0.081	0.094	0.102	0.110	0.112	0.115	0.111	0.108	0.099	0.091	0.078	0.065	0.049	0.033	0.016	0.000
FINAL CAMBER ↑	0	3/8"	13/16"	1"	1 1/4"	1 3/8"	1 1/2"	1 1/2"	1 9/16"	1 5/8"	1 5/8"	1 5/8"	1 5/8"	1 9/16"	1 1/2"	1 3/8"	1 1/4"	1 1/16"	13/16"	3/8"	0

GIRDERS 2-4

CAMBER (GIRDER ALONE IN PLACE) ↑	0.000	0.050	0.100	0.135	0.170	0.193	0.216	0.229	0.242	0.246	0.250	0.246	0.242	0.229	0.216	0.193	0.170	0.135	0.100	0.050	0.000
DEFLEC. DUE TO SUPERIMPOSED DL ** ↓	0.000	0.019	0.038	0.056	0.074	0.088	0.102	0.111	0.120	0.123	0.126	0.122	0.119	0.109	0.100	0.086	0.071	0.054	0.036	0.018	0.000
FINAL CAMBER ↑	0	3/8"	3/4"	15/16"	1 1/8"	1 1/4"	1 3/8"	1 7/16"	1 7/16"	1 1/2"	1 1/2"	1 1/2"	1 1/2"	1 7/16"	1 3/8"	1 5/16"	1 3/16"	1"	3/4"	3/8"	0

** INCLUDES BRIDGE DECK, BUILDUP, STAY-IN-PLACE FORMS, DIAPHRAGMS, PARAPET AND FUTURE WEARING SURFACE.

SCHEMATIC CAMBER ORDINATES SPAN A

ALL VALUES ARE SHOWN IN DECIMALS OF A FOOT EXCEPT
"FINAL CAMBER" WHICH IS GIVEN IN INCHES.

Stantec Consulting Services Inc.
801 Jones Franklin Road
Suite 300
Raleigh, NC 27606
Tel. (919) 851-6866
Fax. (919) 851-7024
www.stantec.com
License No. F-0672

DRAWN BY : J. B. GEILE DATE : 05-25-12
CHECKED BY : T. R. DUDECK DATE : 06-15-12

DESIGN ENGINEER OF RECORD: J. T. KELVINGTON DATE : 03-28-13

PROJECT NO. U-2524C

GUILFORD COUNTY

STATION: 274+26.98 -L-

SHEET 1 of 2

STATE OF NORTH CAROLINA
DEPARTMENT OF TRANSPORTATION
RALEIGH

SUPERSTRUCTURE

DEAD LOAD DEFLECTIONS
SPAN A

NORTH CAROLINA PROFESSIONAL SEAL 13406 ENGINEER JOSEPH T. KELVINGTON 7/1/13

REVISIONS						SHEET NO.
NO.	BY:	DATE:	NO.	BY:	DATE:	S-516
1			3			TOTAL SHEETS
2			4			836

U:\Structures\Y Fleming Rd\Drawing\Final\U-2524C_SD_DL_1.dgn 6/7/2013 4:14:30 PM Jgeile STRUCTURES PEN TABLE.tbl Raleigh PDF Creator (Full).plt

SPAN B

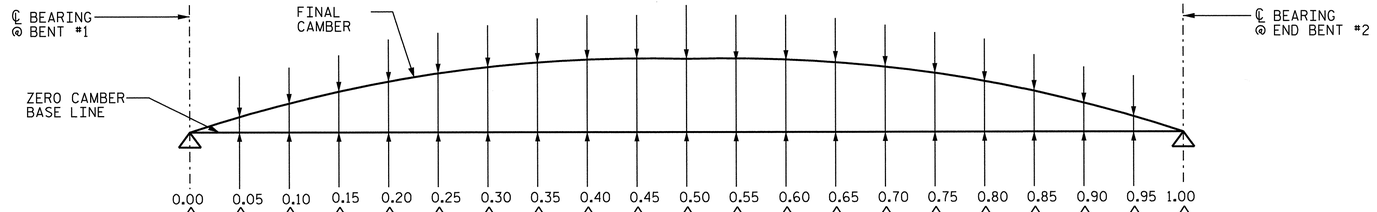

GIRDER 1 & 5

	0.00	0.05	0.10	0.15	0.20	0.25	0.30	0.35	0.40	0.45	0.50	0.55	0.60	0.65	0.70	0.75	0.80	0.85	0.90	0.95	1.00
CAMBER (GIRDER ALONE IN PLACE) ↑	0.000	0.057	0.115	0.157	0.200	0.229	0.258	0.275	0.292	0.297	0.302	0.297	0.292	0.275	0.258	0.229	0.200	0.157	0.115	0.057	0.000
DEFLEC. DUE TO SUPERIMPOSED DL ** ↓	0.000	0.020	0.041	0.061	0.080	0.096	0.112	0.122	0.132	0.135	0.139	0.136	0.134	0.124	0.115	0.099	0.084	0.064	0.043	0.022	0.000
FINAL CAMBER ↑	0	7/16"	7/8"	1 3/16"	1 7/16"	1 5/8"	1 3/4"	1 13/16"	1 15/16"	1 15/16"	1 15/16"	1 15/16"	1 7/8"	1 13/16"	1 3/4"	1 9/16"	1 3/8"	1 1/8"	7/8"	7/16"	0

GIRDERS 2-4

	0.00	0.05	0.10	0.15	0.20	0.25	0.30	0.35	0.40	0.45	0.50	0.55	0.60	0.65	0.70	0.75	0.80	0.85	0.90	0.95	1.00
CAMBER (GIRDER ALONE IN PLACE) ↑	0.000	0.057	0.115	0.157	0.200	0.229	0.258	0.275	0.292	0.297	0.302	0.297	0.292	0.275	0.258	0.229	0.200	0.157	0.115	0.057	0.000
DEFLEC. DUE TO SUPERIMPOSED DL ** ↓	0.000	0.022	0.045	0.067	0.088	0.106	0.123	0.133	0.144	0.148	0.152	0.149	0.146	0.136	0.125	0.109	0.092	0.069	0.047	0.024	0.000
FINAL CAMBER ↑	0	7/16"	13/16"	1 1/16"	1 5/16"	1 1/2"	1 5/8"	1 11/16"	1 3/4"	1 13/16"	1 13/16"	1 3/4"	1 3/4"	1 11/16"	1 5/8"	1 7/16"	1 5/16"	1 1/16"	13/16"	3/8"	0

** INCLUDES BRIDGE DECK, BUILDUP, STAY-IN-PLACE FORMS, DIAPHRAGMS, PARAPET AND FUTURE WEARING SURFACE.

SCHEMATIC CAMBER ORDINATES SPAN B

ALL VALUES ARE SHOWN IN DECIMALS OF A FOOT EXCEPT "FINAL CAMBER" WHICH IS GIVEN IN INCHES.

PROJECT NO. U-2524C

GUILFORD COUNTY

STATION: 274+26.98 -L-

SHEET 2 of 2

STATE OF NORTH CAROLINA
DEPARTMENT OF TRANSPORTATION
RALEIGH

SUPERSTRUCTURE

DEAD LOAD DEFLECTIONS
SPAN B

REVISIONS						SHEET NO.
NO.	BY:	DATE:	NO.	BY:	DATE:	S-517
1			3			TOTAL SHEETS
2			4			836

NORTH CAROLINA PROFESSIONAL SEAL 13406 ENGINEER J. T. KELVINGTON 7/13

Stantec Consulting Services Inc.
801 Jones Franklin Road
Suite 300
Raleigh, NC 27606
Tel. (919) 851-6866
Fax. (919) 851-7024
www.stantec.com
License No. F-0672

DRAWN BY : J. B. GEILE DATE : 05-25-12
CHECKED BY : T. R. DUDECK DATE : 06-15-12

DESIGN ENGINEER OF RECORD: J. T. KELVINGTON DATE : 03-28-13

U:\Structures\Y Fleming Rd\Drawing\Final\U-2524C_SD_DL_2.dgn 6/7/2013 4:14:32 PM jgeile STRUCTURES PEN TABLE.tbl Raleigh PDF Creator (Full).plt

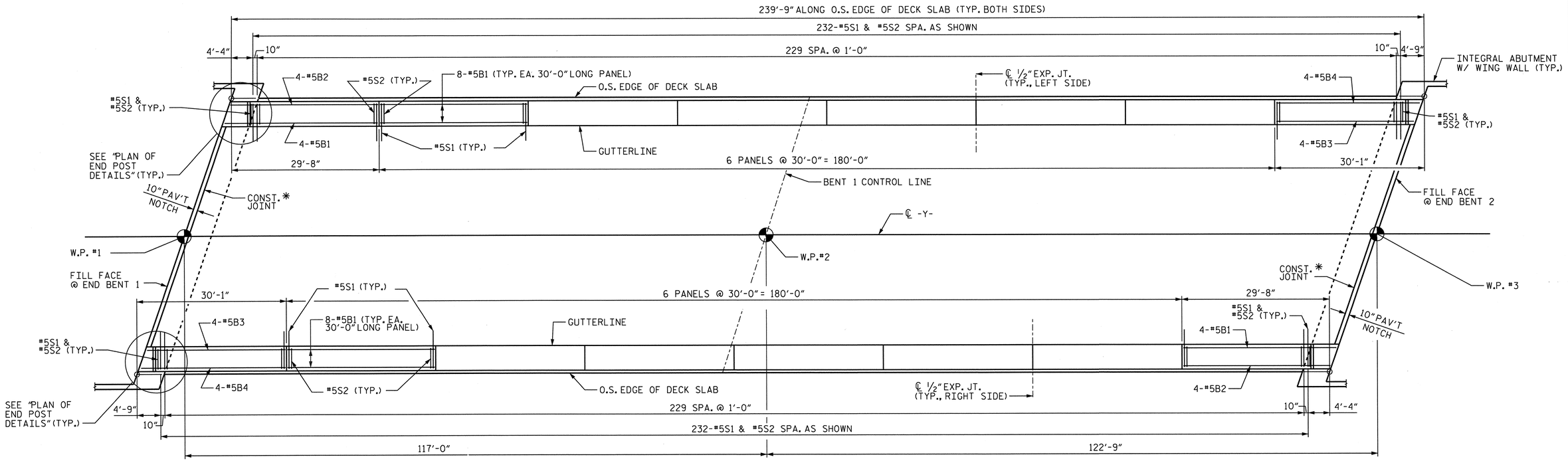

* SEE "BRIDGE APPROACH SLAB FOR INTEGRAL ABUTMENT" DRAWING (TYP. @ EA. END BENT)

PARAPET PLAN

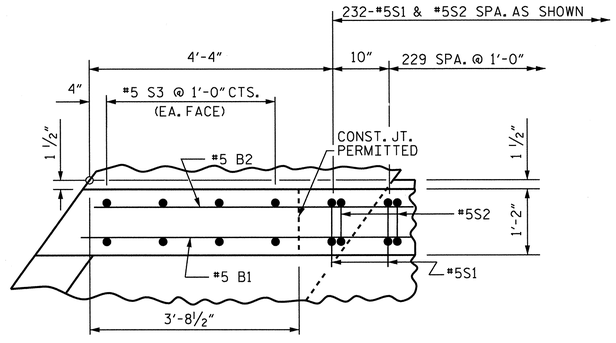

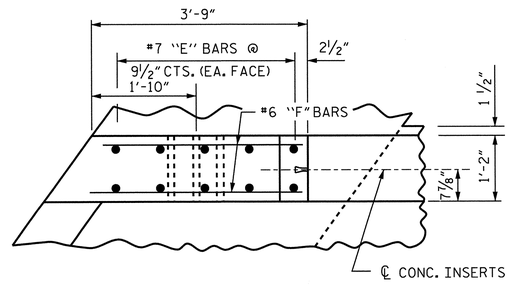

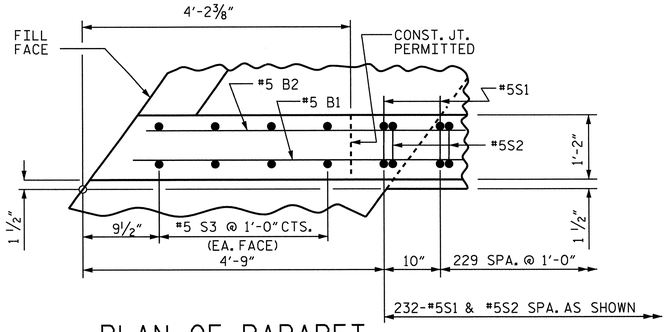

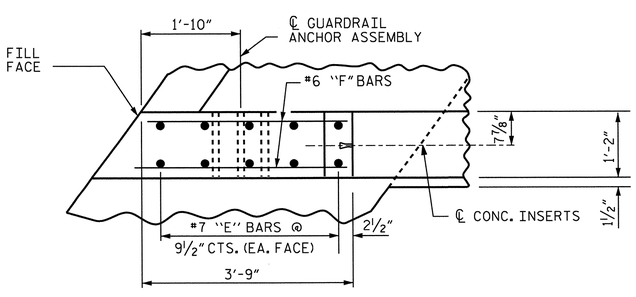

PLAN OF PARAPET

PLAN OF END POST

PARAPET AND END POST FOR TWO BAR RAIL

END BENT 1 SHOWN, END BENT 2 SIMILAR BY ROTATION

PROJECT NO. U-2524C

GUILFORD COUNTY

STATION: 274+26.98 -L-

SHEET 1 OF 2

STATE OF NORTH CAROLINA
DEPARTMENT OF TRANSPORTATION
RALEIGH

SUPERSTRUCTURE
CONCRETE
PARAPET AND END POST

REVISIONS						SHEET NO.
NO.	BY:	DATE:	NO.	BY:	DATE:	S-518
1			3			TOTAL SHEETS
2			4			836

Stantec Consulting Services Inc.
801 Jones Franklin Road
Suite 300
Raleigh, NC 27606
Tel. (919) 851-6866
Fax. (919) 851-7024
www.stantec.com
License No. F-0672

DRAWN BY : J. L. HENNEKES DATE : 06-15-12
CHECKED BY : J. T. KELVINGTON DATE : 06-18-12

DESIGN ENGINEER OF RECORD: J. T. KELVINGTON DATE : 03-28-13

NORTH CAROLINA PROFESSIONAL SEAL 13406 ENGINEER JOSEPH T. KELVINGTON

U:\Structures\Y Fleming Rd\Drawing\Final\U-2524C_SD_GRA DET_1.dgn 6/7/2013 2:25:54 PM jgeile STRUCTURES PEN TABLE.tbl Raleigh PDF Creator (Full).plt

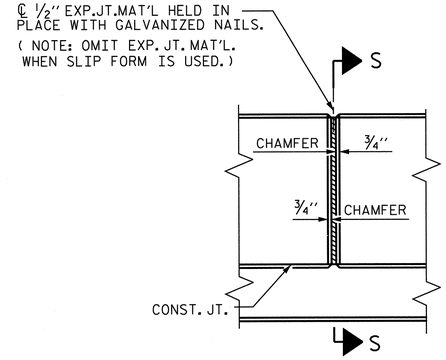

ELEVATION AT EXPANSION JOINTS

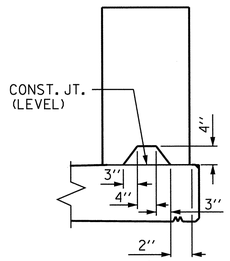

SECTION S-S

AT DAM IN OPEN JOINT
(THIS IS TO BE USED ONLY WHEN SLIP FORM IS USED)

BARRIER RAIL DETAILS

NOTES

THE BARRIER RAIL IN EACH SPAN SHALL NOT BE CAST UNTIL ALL SLAB CONCRETE IN THAT SPAN HAS BEEN CAST AND HAS REACHED A MINIMUM COMPRESSIVE STRENGTH OF 3,000 PSI.

ALL REINFORCING STEEL IN BARRIER RAILS SHALL BE EPOXY COATED.

GROOVED CONTRACTION JOINTS, ½" IN DEPTH, SHALL BE TOOLED IN ALL EXPOSED FACES OF THE BARRIER RAIL AND IN ACCORDANCE WITH ARTICLE 825-10(B) OF THE STANDARD SPECIFICATIONS. THE CONTRACTION JOINT SHALL BE LOCATED AT EACH THIRD POINT BETWEEN BARRIER RAIL EXPANSION JOINTS. ONLY ONE CONTRACTION JOINT IS REQUIRED AT MIDPOINT OF BARRIER RAIL SEGMENTS LESS THAN 20 FEET IN LENGTH AND NO CONTRACTION JOINTS ARE REQUIRED FOR THOSE SEGMENTS LESS THAN 10 FEET IN LENGTH.

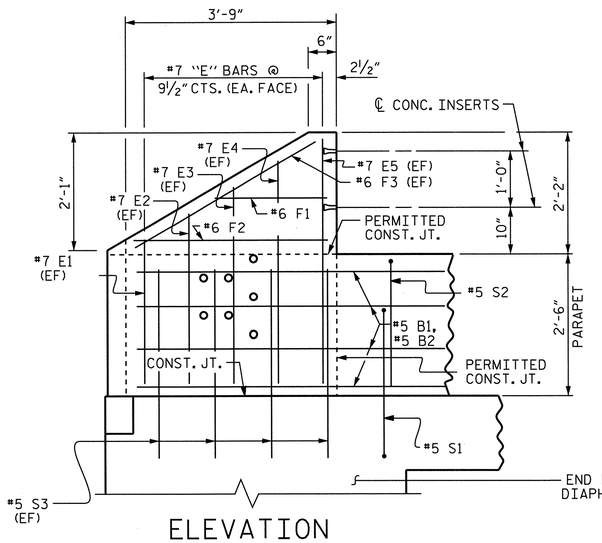

ELEVATION

(EF) DENOTES BAR IN EA. FACE

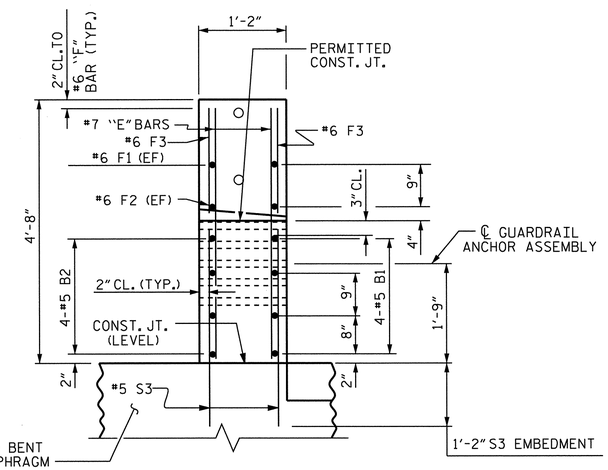

END VIEW

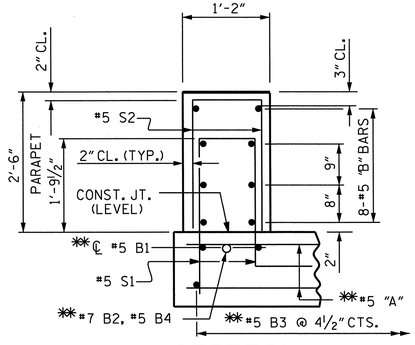

SECTION THRU PARAPET

** SEE "SUPERSTRUCTURE TYPICAL SECTION" DWGS. FOR ADDITIONAL INFORMATION

BILL OF MATERIAL

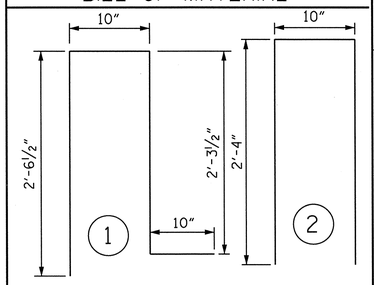

TWO PARAPETS AND TWO END POSTS

BAR	NO.	SIZE	TYPE	LENGTH	WEIGHT
✳B1	104	#5	STR	29'-7"	3209
✳B2	8	#5	STR	29'-4"	245
✳B3	8	#5	STR	29'-3"	244
✳B4	8	#5	STR	29'-6"	246
✳E1	8	#7	STR	2'-6"	41
✳E2	8	#7	STR	2'-11"	48
✳E3	8	#7	STR	3'-4"	55
✳E4	8	#7	STR	3'-9"	61
✳E5	8	#7	STR	4'-4"	71
✳F1	8	#6	STR	1'-6"	18
✳F2	8	#6	STR	3'-0"	36
✳F3	8	#6	STR	3'-4"	40
✳S1	464	#5	1	6'-6"	3146
✳S2	464	#5	2	5'-6"	2662
✳S3	32	#5	STR	3'-6"	117
✳EPOXY COATED REINFORCING STEEL				LBS.	10239
CLASS AA CONCRETE				C.Y.	52.7
CONCRETE PARAPET REQ'D.				L.F.	479.50

✳DENOTES EPOXY COATED REINFORCING

PROJECT NO. U-2524C

GUILFORD COUNTY

STATION: 274+26.98 -L-

SHEET 2 OF 2

STATE OF NORTH CAROLINA
DEPARTMENT OF TRANSPORTATION
RALEIGH

SUPERSTRUCTURE

CONCRETE PARAPET AND END POST

NORTH CAROLINA PROFESSIONAL SEAL 13406 ENGINEER JOSEPH T. KELVINGTON 6/7/13

REVISIONS						SHEET NO.
NO.	BY:	DATE:	NO.	BY:	DATE:	S-519
1			3			TOTAL SHEETS
2			4			830

Stantec
Stantec Consulting Services Inc.
801 Jones Franklin Road
Suite 300
Raleigh, NC 27606
Tel. (919) 851-6866
Fax. (919) 851-7024
www.stantec.com
License No. F-0672

DRAWN BY : J. L. HENNEKES DATE : 05-25-12
CHECKED BY : J. T. KELVINGTON DATE : 06-15-12

DESIGN ENGINEER OF RECORD: J. T. KELVINGTON DATE : 03-28-13

U:\Structures\Y Fleming Rd\Drawing\Final\U-2524C_SD_GRA DET_2.dgn 6/7/2013 4:17:07 PM jgeile STRUCTURES PEN TABLE.tbl Raleigh PDF Creator (Full).plt

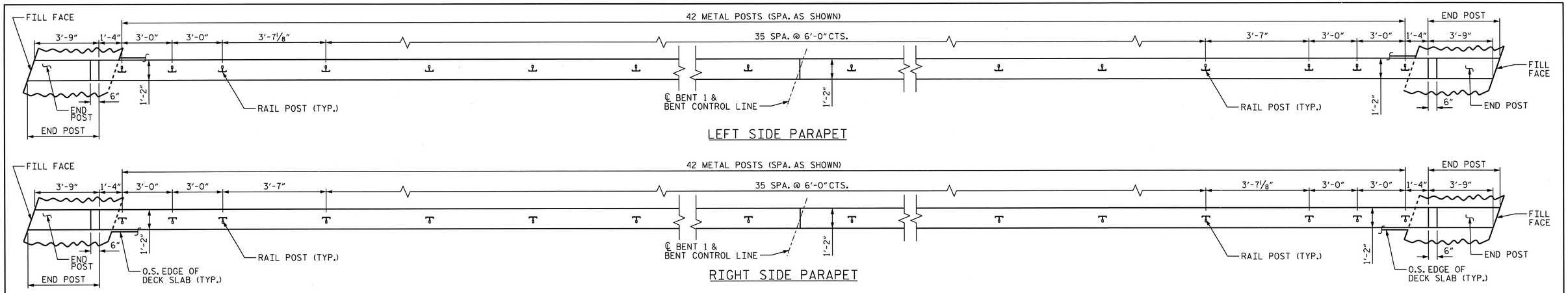

PLAN OF RAIL POST SPACINGS

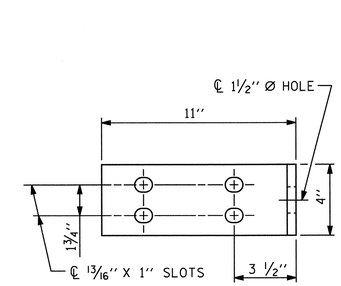

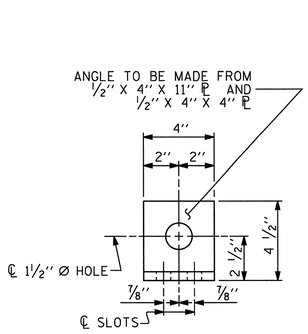

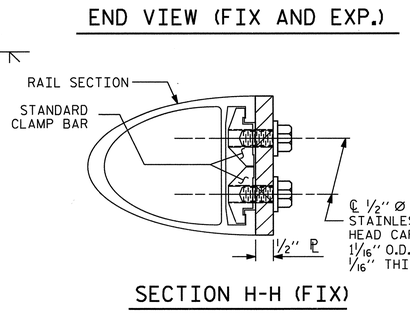

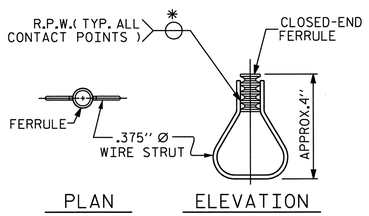

STRUCTURAL CONCRETE INSERT

* EACH WELDED ATTACHMENT OF WIRE TO FERRULE SHALL DEVELOP THE TENSILE STRENGTH OF THE WIRE.

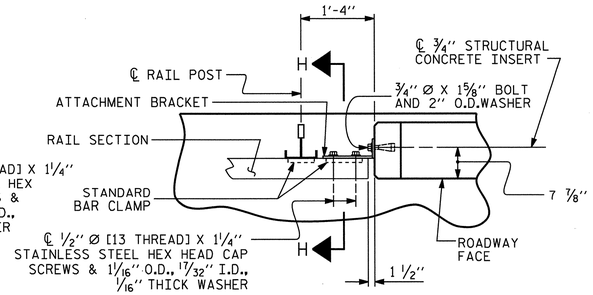

NOTES

THE STRUCTURAL CONCRETE INSERT ASSEMBLY SHALL CONSIST OF THE FOLLOWING COMPONENTS:

A. FERRULES SHALL BE MADE FROM STEEL MEETING THE REQUIREMENTS OF AASHTO M169, GRADE 12L14 AND SHALL HAVE A MINIMUM LENGTH OF THREADS OF 1½".

B. 1 - ¾"Ø X 1⅝" BOLT WITH WASHER. BOLT SHALL CONFORM TO THE REQUIREMENTS OF ASTM A307. BOLT AND WASHER SHALL BE GALVANIZED. (AT THE CONTRACTOR'S OPTION, STAINLESS STEEL BOLT AND WASHER MAY BE USED AS AN ALTERNATE FOR THE ¾"Ø X 1⅝" GALVANIZED BOLT AND WASHER. THEY SHALL CONFORM TO OR EXCEED THE MECHANICAL REQUIREMENTS OF ASTM A307. THE USE OF THIS ALTERNATE SHALL BE APPROVED BY THE ENGINEER.)

C. WIRE STRUT SHOWN IN THE CONCRETE INSERT ASSEMBLY DETAIL IS THE MINIMUM ALLOWABLE SIZE AND SHALL HAVE A MINIMUM TENSILE STRENGTH OF 100,000 PSI. AS AN OPTION, A 7/16"Ø WIRE STRUT WITH A MINIMUM TENSILE STRENGTH OF 90,000 PSI IS ACCEPTABLE.

NOTES

THE METAL RAIL TO END POST CONNECTION SHALL CONSIST OF THE FOLLOWING COMPONENTS:

A. ½" PLATES SHALL CONFORM TO AASHTO M270 GRADE 36 AND SHALL BE GALVANIZED AFTER FABRICATION.

B. ¾" STRUCTURAL CONCRETE INSERT SHALL HAVE A WORKING LOAD SHEAR CAPACITY OF 4800 LBS. THE FERRULES SHALL ENGAGE A 3#4"Ø X 15#8" BOLT WITH 2" O.D. WASHER IN PLACE. THE ¾"Ø X 1⅝" BOLT SHALL HAVE N. C. THREADS.

C. CAP SCREWS FOR RAIL ATTACHMENT TO ANGLE SHALL CONFORM TO THE REQUIREMENTS OF ASTM F593 ALLOY 305 STAINLESS STEEL. CAP SCREWS TO BE CENTERED IN SLOTS AT 60°F.

D. STANDARD CLAMP BARS (SEE METAL RAIL SHEET).

E. ½"Ø PIPE SLEEVES (IF REQUIRED) TO BE GALVANIZED.

THE COST OF THE STANDARD CLAMP BARS AND CAP SCREWS USED IN THE METAL RAIL TO END POST CONNECTION SHALL BE INCLUDED IN THE UNIT CONTRACT PRICE BID FOR LINEAR FEET OF 2 BAR METAL RAILS.

THE ¾" STRUCTURAL CONCRETE INSERT WITH BOLT SHALL BE ASSEMBLED IN THE SHOP.

THE COST OF THE ¾" STRUCTURAL CONCRETE INSERT ASSEMBLY, AND THE ½" PLATES COMPLETE IN PLACE SHALL BE INCLUDED IN THE VARIOUS PAY ITEMS.

THE CONTRACTOR, AT HIS OPTION, MAY USE AN ADHESIVE BONDING SYSTEM IN LIEU OF THE STRUCTURAL CONCRETE INSERT EMBEDDED IN THE END POST. IF THE ADHESIVE BONDING SYSTEM IS USED, THE 3/4"Ø X 1⅝" BOLT WITH WASHER SHALL BE REPLACED WITH A ¾"Ø X 6½" BOLT AND 2" O.D. WASHER. ALL SPECIFICATIONS THAT APPLY TO THE ¾"Ø X 1⅝" BOLT SHALL APPLY TO THE ¾"Ø X 6½" BOLT. FIELD TESTING OF THE ADHESIVE BONDING SYSTEM IS NOT REQUIRED.

FIXED

DETAILS FOR ATTACHING METAL RAIL TO END POST

Stantec
Stantec Consulting Services Inc.
801 Jones Franklin Road
Suite 300
Raleigh, NC 27606
Tel. (919) 851-6866
Fax. (919) 851-7024
www.stantec.com
License No. F-0672

ASSEMBLED BY : J. L. HENNEKES DATE : 06/12
CHECKED BY : J. T. KELVINGTON DATE : 06/12

DRAWN BY : FCJ 1/88
CHECKED BY : CRK 3/89

REV. 5/7/03 RWW/JTE
REV. 5/1/06 TLA/GM
REV. 10/1/11 MAA/GM

DESIGN ENGINEER OF RECORD: J. T. KELVINGTON DATE : 03-28-13

PROJECT NO. U-2524C
GUILFORD COUNTY
STATION: 274+26.98 -L-

STATE OF NORTH CAROLINA
DEPARTMENT OF TRANSPORTATION
RALEIGH
STANDARD

RAIL POST SPACINGS AND END OF RAIL DETAILS
FOR TWO BAR METAL RAILS

REVISIONS						SHEET NO.
NO.	BY:	DATE:	NO.	BY:	DATE:	S-520
1			3			TOTAL SHEETS
2			4			836

STD. NO. BMR2

NORTH CAROLINA PROFESSIONAL SEAL 13406 ENGINEER JOHN T. KELVINGTON

U:\Structures\Y Fleming Rd\Drawing\Final\U-2524C_SD_BMR2_12.dgn 6/11/2013 11:35:56 PM tennis

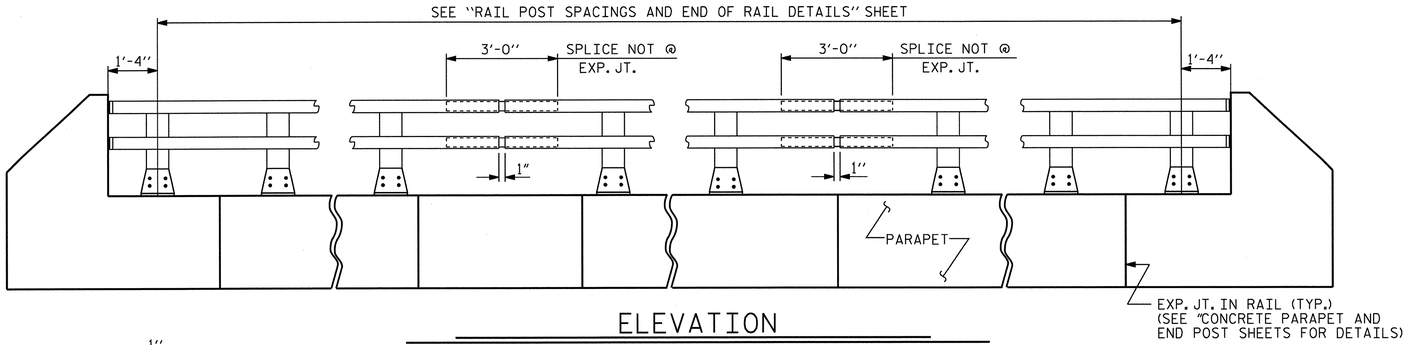

ELEVATION

NOTE: FOR ATTACHMENT OF METAL RAIL TO END POST, SEE "RAIL POST SPACINGS AND END OF RAIL DETAILS".

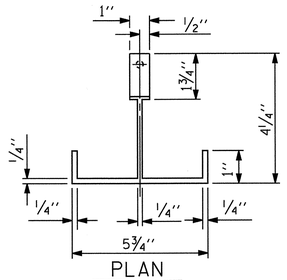

PLAN

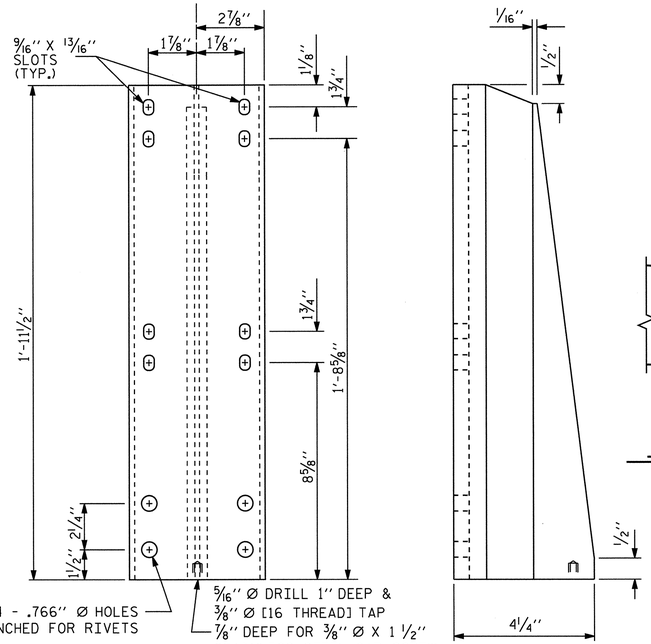

FRONT ELEVATION

SIDE ELEVATION

DETAILS OF POST

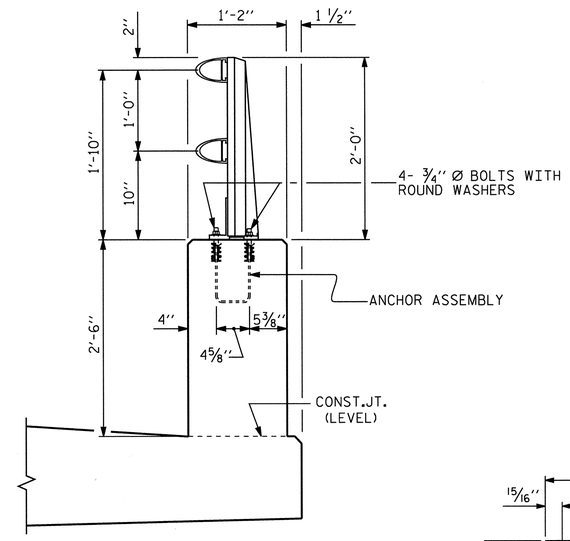

SECTION THRU PARAPET AND RAIL

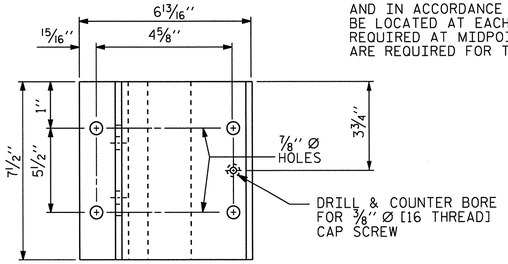

PLAN

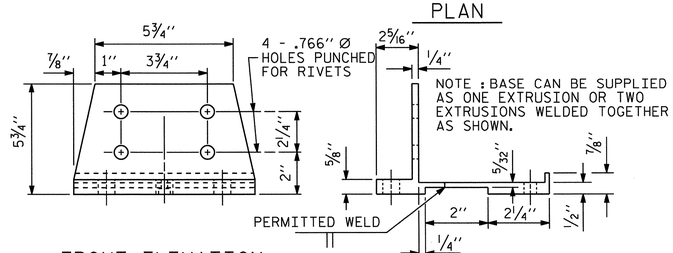

FRONT ELEVATION

SIDE ELEVATION

POST BASE DETAILS

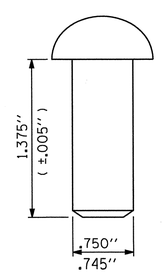

RIVET DETAIL

NOTES

AT THE CONTRACTOR'S OPTION, METAL RAIL MAY BE EITHER ALUMINUM OR GALVANIZED STEEL IN ACCORDANCE WITH THE REQUIREMENTS OF THE GENERAL NOTES AND THE FOLLOWING SPECIFICATIONS FOR THE ALTERNATE MATERIALS; HOWEVER, THE CONTRACTOR WILL BE REQUIRED TO USE THE SAME RAIL MATERIAL ON ALL STRUCTURES ON THE PROJECT FOR WHICH METAL RAIL IS DESIGNATED.

ALUMINUM RAILS

MATERIAL FOR POSTS, BASES AND RAILS, EXPANSION BARS AND CLAMP BARS SHALL BE ASTM B-221 ALLOY 6061-T6.

MATERIAL FOR RIVETS SHALL BE ASTM B316 ALLOY 6061-T6. RIVETS SHALL BE STANDARD BUTTON HEAD AND CONE POINT COLD DRIVEN AS PER DRAWING.

THE BASE OF RAIL POSTS, OR ANY OTHER ALUMINUM SURFACE IN CONTACT WITH CONCRETE SHALL BE THOROUGHLY COATED WITH AN ALUMINUM IMPREGNATED CAULKING COMPOUND OF APPROVED QUALITY.

MATERIAL FOR SHIMS TO BE ASTM B209 ALLOY 6061-T6.

GALVANIZED STEEL RAILS

MATERIAL AND GALVANIZING ARE TO CONFORM TO THE FOLLOWING SPECIFICATIONS:

POST, POST BASES, RAILS, EXPANSION BARS AND CLAMP BARS: AASHTO M270 GRADE 36 STRUCTURAL STEEL - GALVANIZED TO AASHTO M111.

RIVETS: RIVETS SHALL MEET THE REQUIREMENTS OF ASTM A502 FOR GRADE 1 RIVETS.

THE CUT ENDS OF GALVANIZED STEEL RAILING, AFTER GRINDING SMOOTH SHALL BE GIVEN TWO COATS OF ZINC RICH PAINT MEETING THE REQUIREMENTS OF FEDERAL SPECIFICATION MIL-P-26915 USAF TYPE 1, OR OF FEDERAL SPECIFICATIONS TT-P-641.

SHIMS: SHIMS SHALL MEET THE REQUIREMENTS OF ASTM A570 FOR GRADE 33 OR A611 FOR GRADE C AND SHALL BE GALVANIZED IN ACCORDANCE WITH AASHTO M111.

RAIL CAPS: RAIL CAPS SHALL MEET THE REQUIREMENTS OF ASTM A570 FOR GRADE 33 OR A611 FOR GRADE C AND SHALL BE GALVANIZED IN ACCORDANCE WITH AASHTO M111.

GENERAL NOTES

RAILING SHALL BE CONTINUOUS FROM END POST TO END POST OF BRIDGE. EACH JOINT IN RAIL LENGTH SHALL BE SPLICED AS DETAILED. PANEL LENGTHS OF RAIL SHALL BE ATTACHED TO A MINIMUM OF THREE POSTS.

FOR END OF RAIL TO CLEAR FACE OF CONCRETE END POST DIMENSION, SEE STANDARD NO. BMR2.

CAP SCREWS SHALL BE ASTM F593 ALLOY 305 STAINLESS STEEL. WASHERS SHALL MEET THE REQUIREMENTS OF ASTM F844 EXCEPT THEY SHALL BE MADE FROM ALLOY 304 STAINLESS STEEL.

CERTIFIED MILL REPORTS ARE REQUIRED FOR RAILS AND POSTS. SHOP INSPECTION IS NOT REQUIRED.

METAL RAIL POSTS SHALL BE SET NORMAL TO CURB GRADE.

METHOD OF MEASUREMENT FOR METAL RAILS: FOR LENGTH OF METAL RAILS TO BE PAID FOR, SEE THE STANDARD SPECIFICATIONS.

CURVED RAIL USAGE: WHERE RAILS ARE TO BE USED ON BRIDGES ON HORIZONTAL AND/OR VERTICAL CURVATURE THE CONTRACTOR MAY, AT HIS OPTION, HAVE THE REQUIRED CURVATURE IN THE RAIL FORMED IN THE SHOP OR IN THE FIELD. IN EITHER EVENT, THE RAIL SHALL CONFORM WITHOUT BUCKLING OR KINKING TO THE REQUIRED CURVATURE IN A UNIFORM MANNER ACCEPTABLE TO THE ENGINEER.

TO INSURE FUTURE IDENTIFICATION OF THE FABRICATOR, A PERMANENT IDENTIFYING MARK SHALL BE PLACED ON EACH POST. THE METHOD OF MARKING AND LOCATION SHALL BE SUCH THAT IT DOES NOT DETRACT FROM THE APPEARANCE OF THE POST, BUT REMAINS VISIBLE AFTER RAIL PLACEMENT.

SHIMS SHALL BE USED AS NECESSARY FOR POST ALIGNMENT.

ALLOY 6351-T5 MAY BE SUBSTITUTED FOR ALLOY 6061-T6 WHERE APPLICABLE.

MINOR VARIATIONS IN DETAILS OF METAL RAIL WILL BE CONSIDERED. DETAILS OF SUCH VARIATIONS, IF DESIRED, SHALL BE SUBMITTED FOR APPROVAL.

GROOVED CONTRACTION JOINTS, ½" IN DEPTH, SHALL BE TOOLED IN ALL EXPOSED FACES OF THE PARAPET AND IN ACCORDANCE WITH ARTICLE 825-10(B) OF THE STANDARD SPECIFICATIONS. A CONTRACTION JOINT SHALL BE LOCATED AT EACH THIRD POINT BETWEEN PARAPET EXPANSION JOINTS. ONLY ONE CONTRACTION JOINT IS REQUIRED AT MIDPOINT OF PARAPET SEGMENTS LESS THAN 20 FEET IN LENGTH AND NO CONTRACTION JOINTS ARE REQUIRED FOR THOSE SEGMENTS LESS THAN 10 FEET IN LENGTH.

PAY LENGTH = 463.69 LIN. FT.

Stantec Consulting Services Inc.
801 Jones Franklin Road
Suite 300
Raleigh, NC 27606
Tel. (919) 851-6866
Fax. (919) 851-7024
www.stantec.com
License No. F-0672

ASSEMBLED BY : J. L. HENNEKES	DATE : 06/12
CHECKED BY : J. T. KELVINGTON	DATE : 06/12
DRAWN BY : EEM 6/94	REV. 5/7/03R RWW/JTE
CHECKED BY : RGW 6/94	REV. 5/1/06 TLA/GM
	REV. 10/1/11 MAA/GM

DESIGN ENGINEER OF RECORD: J. T. KELVINGTON DATE : 03-28-13

PROJECT NO. U-2524C

GUILFORD COUNTY

STATION: 274+26.98 -L-

SHEET 1 OF 2

STATE OF NORTH CAROLINA
DEPARTMENT OF TRANSPORTATION
RALEIGH

STANDARD

2 BAR METAL RAIL

REVISIONS						SHEET NO.
NO.	BY:	DATE:	NO.	BY:	DATE:	S-521
1			3			TOTAL SHEETS
2			4			836

STD. NO. BMR3

NORTH CAROLINA PROFESSIONAL SEAL 13406 ENGINEER JOSEPH T. KELVINGTON

U:\Structures\Y Fleming Rd\Drawing\Final\U-2524C_SD_BMR3_02.dgn 6/7/2013 2:26:01 PM jgelle

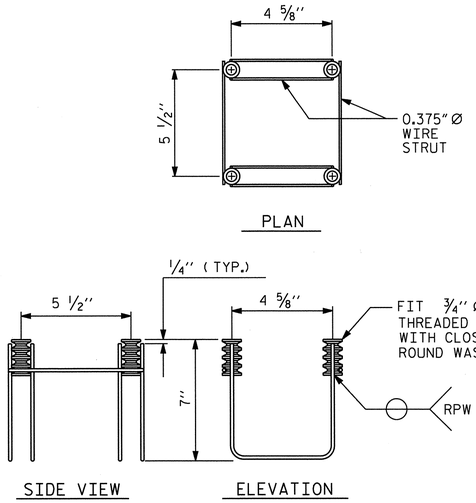

4-BOLT METAL RAIL ANCHOR ASSEMBLY

(84 ASSEMBLIES REQUIRED)

NOTES

STRUCTURAL CONCRETE ANCHOR ASSEMBLY

THE STRUCTURAL CONCRETE ANCHOR ASSEMBLY SHALL CONSIST OF THE FOLLOWING COMPONENTS :

A. FERRULES SHALL BE MADE FROM STEEL MEETING THE REQUIREMENTS OF AASHTO M169, GRADE 12L14 AND SHALL HAVE A MINIMUM LENGTH OF THREADS OF 2" FOR 3/4" FERRULES.

B. 4 - 3/4" Ø X 2 1/2" BOLTS WITH WASHERS. BOLTS SHALL CONFORM TO THE REQUIREMENTS OF ASTM A307. BOLTS AND WASHERS SHALL BE GALVANIZED. AT THE CONTRACTOR'S OPTION, STAINLESS STEEL BOLTS AND WASHERS MAY BE USED AS AN ALTERNATE FOR THE 3/4" Ø X 2 1/2" GALVANIZED BOLTS AND WASHERS. THEY SHALL CONFORM TO OR EXCEED THE MECHANICAL REQUIREMENTS OF ASTM A307. THE USE OF THIS ALTERNATE SHALL BE APPROVED BY THE ENGINEER.

C. WIRE STRUT SHOWN IN THE CONCRETE ANCHOR ASSEMBLY DETAIL IS THE MINIMUM ALLOWABLE SIZE AND SHALL HAVE A MINIMUM TENSILE STRENGTH OF 100,000 PSI. AS AN OPTION, A 7/16" Ø WIRE STRUT WITH A MINIMUM TENSILE STRENGTH OF 90,000 PSI IS ACCEPTABLE.

D. THE METAL RAIL ANCHOR ASSEMBLIES TO BE HOT DIPPED GALVANIZED TO CONFORM TO REQUIREMENTS OF AASHTO M111.

E. THE COST OF THE METAL RAIL ANCHOR ASSEMBLY WITH BOLTS AND WASHERS COMPLETE IN PLACE SHALL BE INCLUDED IN THE PRICE BID FOR LINEAR FEET OF METAL RAIL.

F. BOLTS TO BE TIGHTENED ONE-HALF TURN WITH A WRENCH FROM A FINGER-TIGHT POSITION.

THE CONTRACTOR MAY USE ADHESIVELY ANCHORED ANCHOR BOLTS IN PLACE OF THE METAL RAIL ANCHOR ASSEMBLY. LEVEL ONE FIELD TESTING IS REQUIRED, AND THE YIELD LOAD OF THE 3/4" Ø BOLT IS 10 KIPS. FOR ADHESIVELY ANCHORED ANCHOR BOLTS OR DOWELS, SEE THE STANDARD SPECIFICATIONS.

WHEN ADHESIVELY ANCHORED ANCHOR BOLTS ARE USED, BOLTS SHALL MEET THE REQUIREMENTS OF ASTM F593 ALLOY 304 STAINLESS STEEL WITH MINIMUM 75,000 PSI ULTIMATE STRENGTH. NUTS SHALL MEET THE REQUIREMENTS OF ASTM F594 ALLOY 304 STAINLESS STEEL AND WASHERS SHALL MEET THE REQUIREMENTS OF ASTM F844 EXCEPT THEY SHALL BE MADE FROM ALLOY 304 STAINLESS STEEL.

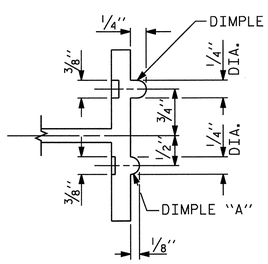

SECTION B - B

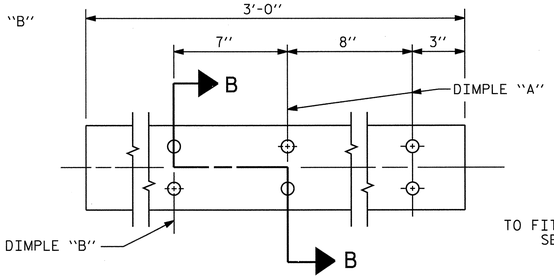

EXPANSION BAR DETAILS

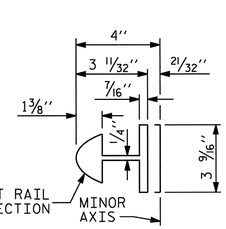

BAR SECTION

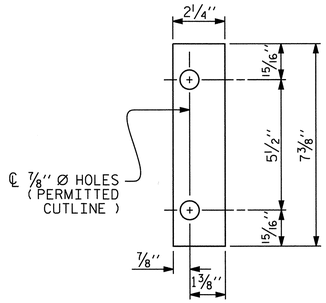

FRONT PLATE

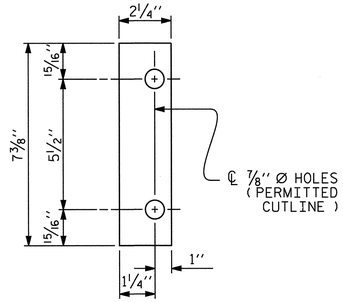

REAR PLATE

SHIM DETAILS

NOTE :
SHIMS MAY BE CUT ALONG PERMITTED CUTLINE OR SLOTTED TO EDGE OF PLATE TO FACILITATE PLACEMENT.

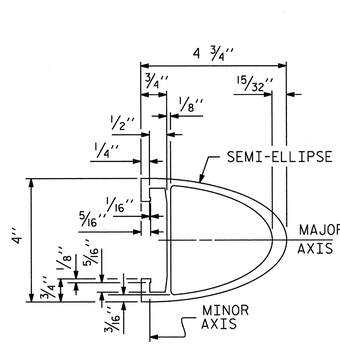

RAIL SECTION

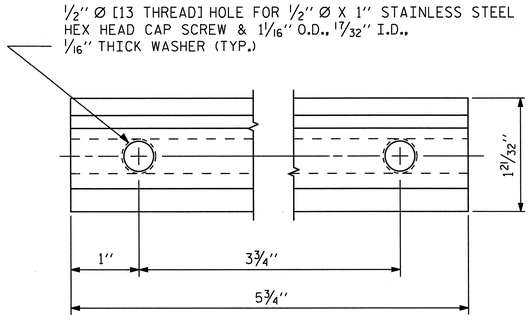

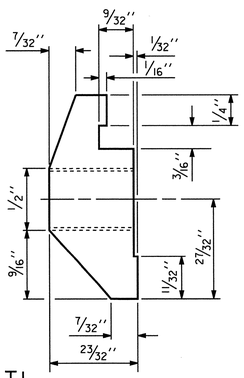

CLAMP BAR DETAIL

(4 REQUIRED PER POST)

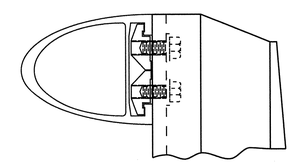

CLAMP ASSEMBLY

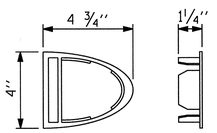

RAIL CAP

PROJECT NO. U-2524C

GUILFORD COUNTY

STATION: 274+26.98 -L-

SHEET 2 OF 2

STATE OF NORTH CAROLINA
DEPARTMENT OF TRANSPORTATION
RALEIGH

STANDARD

2 BAR METAL RAIL

Stantec
Stantec Consulting Services Inc.
801 Jones Franklin Road
Suite 300
Raleigh, NC 27606
Tel. (919) 851-6866
Fax. (919) 851-7024
www.stantec.com
License No. F-0672

ASSEMBLED BY : J. L. HENNEKES DATE : 06/12
CHECKED BY : J. T. KELVINGTON DATE : 06/12

DRAWN BY : EEM 6/94
CHECKED BY : RGW 6/94

REV. 8/16/99 MAB/LES
REV. 5/1/06R KMM/GM
REV. 10/1/11 MAA/GM

DESIGN ENGINEER OF RECORD: J. T. KELVINGTON DATE : 03-28-13

NORTH CAROLINA PROFESSIONAL SEAL 13406 ENGINEER JOSEPH T. KELVINGTON 11/13

REVISIONS						SHEET NO.
NO.	BY:	DATE:	NO.	BY:	DATE:	S-522
1			3			TOTAL SHEETS
2			4			836

STD. NO. BMR4

U:\Structures\Y Fleming Rd\Drawing\Final\U-2524C_SD_BMR4_12.dgn 6/11/2013 11:35:58 PM tennis

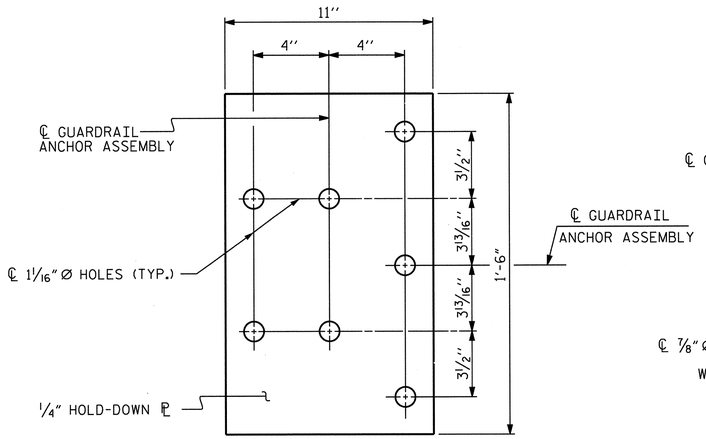

PLAN

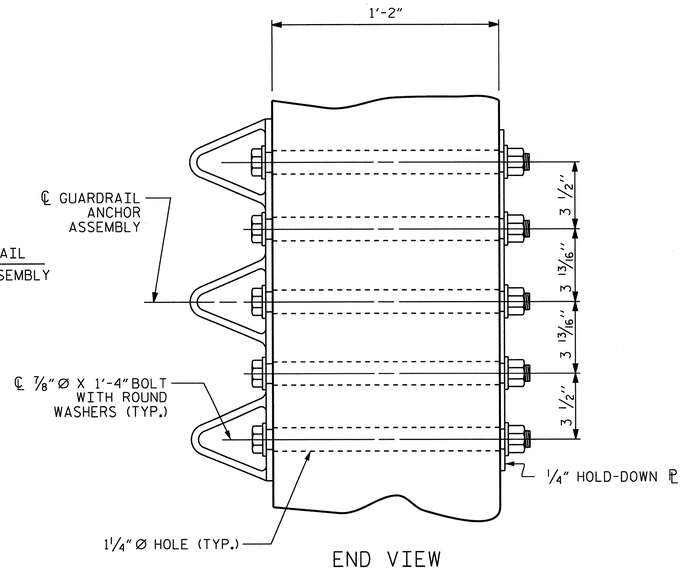

END VIEW

GUARDRAIL ANCHOR ASSEMBLY DETAILS

NOTES

THE GUARDRAIL ANCHOR ASSEMBLY SHALL CONSIST OF A 1/4'' HOLD DOWN PLATE AND 7 - 7/8'' Ø BOLTS WITH NUTS AND WASHERS.

THE HOLD-DOWN PLATE SHALL CONFORM TO AASHTO M270 GRADE 36. AFTER FABRICATION, THE HOLD-DOWN PLATE SHALL BE HOT-DIP GALVANIZED IN ACCORDANCE WITH AASHTO M111.

BOLTS SHALL CONFORM TO THE REQUIREMENTS OF ASTM A307 AND NUTS SHALL CONFORM TO THE REQUIREMENTS OF AASHTO M291. BOLTS, NUTS AND WASHERS SHALL BE GALVANIZED. AT THE CONTRACTOR'S OPTION, STAINLESS STEEL BOLTS, NUTS AND WASHERS MAY BE USED AS AN ALTERNATE FOR THE 7/8'' Ø GALVANIZED BOLTS, NUTS AND WASHERS. THEY SHALL CONFORM TO OR EXCEED THE MECHANICAL REQUIREMENTS OF ASTM A307. THE USE OF THIS ALTERNATE SHALL BE APPROVED BY THE ENGINEER.

THE GUARDRAIL ANCHOR ASSEMBLY IS REQUIRED AT ALL POINTS WHERE APPROACH GUARDRAIL IS TO BE ATTACHED TO THE END OF THE PARAPET. FOR POINTS OF ATTACHMENT, SEE SKETCH.

AFTER INSTALLATION, THE EXPOSED THREAD OF THE BOLT SHALL BE BURRED WITH A SHARP POINTED TOOL.

THE COST OF THE GUARDRAIL ANCHOR ASSEMBLIES WITH BOLTS, NUTS AND WASHERS COMPLETE IN PLACE, SHALL BE INCLUDED IN THE VARIOUS PAY ITEMS.

THE VERTICAL REINFORCING BARS MAY BE SHIFTED SLIGHTLY IN THE END POST TO CLEAR ASSEMBLY BOLTS.

THE 1 1/4'' Ø HOLES SHALL BE FORMED OR DRILLED WITH A CORE BIT. IMPACT TOOLS WILL NOT BE PERMITTED. ANY CONCRETE DAMAGED BY THIS WORK SHALL BE REPAIRED TO THE SATISFACTION OF THE ENGINEER.

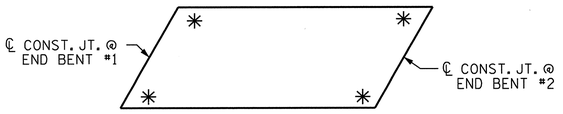

SKETCH SHOWING POINTS OF ATTACHMENT

✳ LOCATION OF GUARDRAIL ATTACHMENT

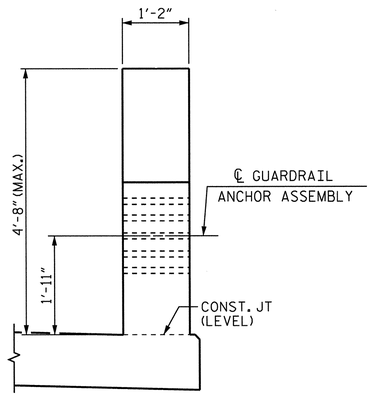

END VIEW
(TWO BAR METAL RAIL)

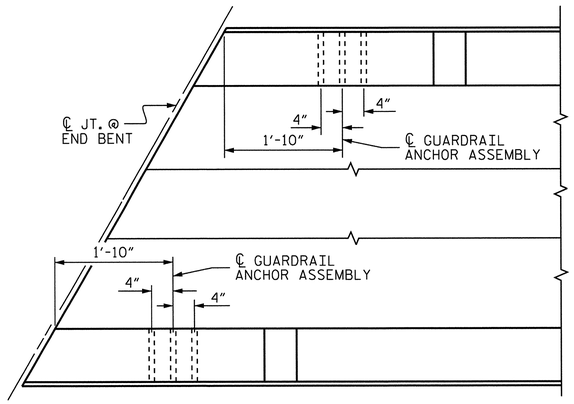

PLAN

LOCATION OF GUARDRAIL ANCHOR AT END POST

PROJECT NO. U-2524C
GUILFORD COUNTY
STATION: 274+26.98 -L-

Stantec
Stantec Consulting Services Inc.
801 Jones Franklin Road
Suite 300
Raleigh, NC 27606
Tel. (919) 851-6866
Fax. (919) 851-7024
www.stantec.com
License No. F-0672

ASSEMBLED BY : J. L. HENNEKES	DATE : 06/12
CHECKED BY : J. T. KELVINGTON	DATE : 06/12
DRAWN BY : MAA 5/10	ADDED 5/6/10
CHECKED BY : GM 5/10	REV. 10/1/11 MAA/GM
	REV. 12/5/11 MAA/GM

DESIGN ENGINEER OF RECORD: J. T. KELVINGTON DATE : 03-28-13

STATE OF NORTH CAROLINA
DEPARTMENT OF TRANSPORTATION
RALEIGH
STANDARD
GUARDRAIL ANCHORAGE DETAILS FOR METAL RAILS

REVISIONS						SHEET NO.
NO.	BY:	DATE:	NO.	BY:	DATE:	S-523
1			3			TOTAL SHEETS
2			4			836

NORTH CAROLINA PROFESSIONAL SEAL 13406 ENGINEER JOSEPH T. KELVINGTON

STD. NO. GRA3

U:\Structures\Y Fleming Rd\Drawing\Final\U-2524C_SD_GRA3_12.dgn 6/7/2013 2:26:08 PM jgelle

REINFORCING BAR SCHEDULE (DECK & DIAPHRAGM)

BAR	NO.	SIZE	TYPE	LENGTH	WEIGHT
*A1	382	5	STR.	46'-3"	18,427
*A101	2	5	STR.	43'-9"	91
*A102	2	5	STR.	42'-1"	88
*A103	2	5	STR.	40'-5"	84
*A104	2	5	STR.	38'-8"	81
*A105	2	5	STR.	37'-0"	77
*A106	2	5	STR.	35'-4"	74
*A107	2	5	STR.	33'-8"	70
*A108	2	5	STR.	32'-0"	67
*A109	2	5	STR.	30'-4"	63
*A110	2	5	STR.	28'-8"	60
*A111	2	5	STR.	27'-0"	56
*A112	2	5	STR.	25'-3"	53
*A113	2	5	STR.	23'-7"	49
*A114	2	5	STR.	21'-11"	46
*A115	2	5	STR.	20'-3"	42
*A116	2	5	STR.	18'-7"	39
*A117	2	5	STR.	16'-11"	35
*A118	2	5	STR.	15'-3"	32
*A119	2	5	STR.	13'-7"	28
*A120	2	5	STR.	11'-11"	25
*A121	2	5	STR.	10'-2"	21
*A122	2	5	STR.	8'-6"	18
*A123	2	5	STR.	6'-10"	14
*A124	2	5	STR.	5'-2"	11
*A125	2	5	STR.	3'-6"	7

BAR	NO.	SIZE	TYPE	LENGTH	WEIGHT
A2	382	5	STR.	46'-3"	18,427
A201	2	5	STR.	43'-9"	91
A202	2	5	STR.	42'-1"	88
A203	2	5	STR.	40'-5"	84
A204	2	5	STR.	38'-8"	81
A205	2	5	STR.	37'-0"	77
A206	2	5	STR.	35'-4"	74
A207	2	5	STR.	33'-8"	70
A208	2	5	STR.	32'-0"	67
A209	2	5	STR.	30'-4"	63
A210	2	5	STR.	28'-8"	60
A211	2	5	STR.	27'-0"	56
A212	2	5	STR.	25'-3"	53
A213	2	5	STR.	23'-7"	49
A214	2	5	STR.	21'-11"	46
A215	2	5	STR.	20'-3"	42
A216	2	5	STR.	18'-7"	39
A217	2	5	STR.	16'-11"	35
A218	2	5	STR.	15'-3"	32
A219	2	5	STR.	13'-7"	28
A220	2	5	STR.	11'-11"	25
A221	2	5	STR.	10'-2"	21
A222	2	5	STR.	8'-6"	18
A223	2	5	STR.	6'-10"	14
A224	2	5	STR.	5'-2"	11
A225	2	5	STR.	3'-6"	7

BAR	NO.	SIZE	TYPE	LENGTH	WEIGHT
*B1	160	5	STR.	49'-7"	8,274
*B2	91	7	STR.	60'-0"	11,160
B3	210	5	STR.	49'-4"	10,805
*B4	120	5	STR.	24'-6"	3,066
B5	56	5	STR.	24'-6"	1,431
*G1	4	5	STR.	25'-9"	107
K1	21	4	STR.	15'-2"	213
K2	16	4	STR.	6'-4"	68
K3	80	4	STR.	9'-7"	512
K4	16	4	STR.	6'-8"	71
K5	4	4	STR.	4'-3"	11
K6	20	4	STR.	5'-7"	75
K7	4	4	STR.	5'-0"	13
K8	36	4	STR.	19'-8"	473
K9	20	4	STR.	5'-3"	70
K10	12	4	STR.	6'-9"	54
S1	32	4	3	11'-9"	251
S2	184	4	2	2'-9"	338
*S3	94	4	5	13'-11"	874
*S4	88	4	5	10'-9"	632
U1	24	4	1	15'-10"	254
U2	48	4	4	16'-6"	529
U3	12	4	4	18'-8"	150

* = EPOXY COATED REINF. STEEL

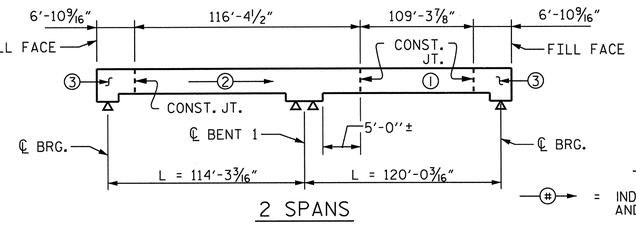

2 SPANS

KEY

= INDICATES POUR NUMBER AND DIRECTION OF POUR

L = LENGTH OF EACH SPAN

POURING SEQUENCE-PRESTRESSED CONCRETE SUPERSTRUCTURE

(CONTINUOUS FOR LIVE LOAD)

SUPERSTRUCTURE REINFORCING STEEL LENGTHS ARE BASED ON THE FOLLOWING MINIMUM SPLICE LENGTHS

BAR SIZE	SUPERSTRUCTURE EXCEPT APPROACH SLABS, PARAPET, AND BARRIER RAIL		APPROACH SLABS		PARAPET AND BARRIER RAIL
	EPOXY COATED	UNCOATED	EPOXY COATED	UNCOATED	
#4	2'-0"	1'-9"	2'-0"	1'-9"	2'-9"
#5	2'-6"	2'-2"	2'-6"	2'-2"	3'-5"
#6	3'-0"	2'-7"	3'-10"	2'-7"	4'-4"
#7	5'-3"	3'-6"			
#8	6'-10"	4'-7"			

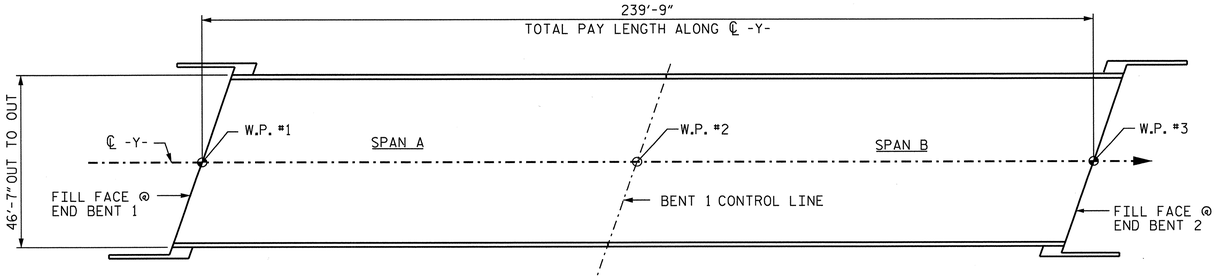

LAYOUT FOR COMPUTING AREA OF REINFORCED CONCRETE DECK SLAB

(SQ. FT. = 11,168)

BAR TYPES

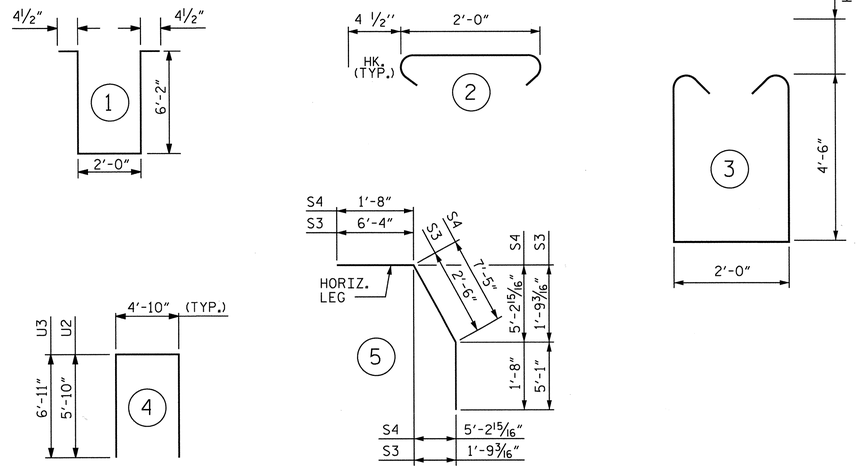

ALL BAR DIMENSIONS ARE OUT TO OUT

SUPERSTRUCTURE BILL OF MATERIAL

SPANS	CLASS AA CONCRETE	REINFORCING STEEL	EPOXY COATED REINFORCING STEEL	REINFROCED CONCRETE DECK SLAB
	(CU. YDS.)	(LBS.)	(LBS.)	(SQ. FT.)
"A" AND "B"	507.8	41,406	43,771	11,168
TOTALS**	507.8	41,406	43,771	11,168

**QUANTITIES FOR BARRIER RAIL ARE NOT INCLUDED

CLASS AA CONC. BREAKDOWN

POUR 1	155.1 C.Y.
POUR 2	178.1 C.Y.
POUR 3	165.6 C.Y.
TOTAL CLASS AA CONC.	507.8 C.Y.

GROOVING BRIDGE FLOORS

APPROACH SLABS	1,156 SQ.FT.
BRIDGE DECK	9,742 SQ.FT.
TOTAL	10,898 SQ.FT.

PROJECT NO. U-2524C

GUILFORD COUNTY

STATION: 274+26.98 -L-

SHEET 1 of 2

STATE OF NORTH CAROLINA
DEPARTMENT OF TRANSPORTATION
RALEIGH

SUPERSTRUCTURE BILL OF MATERIAL

Stantec Consulting Services Inc.
801 Jones Franklin Road
Suite 300
Raleigh, NC 27606
Tel. (919) 851-6866
Fax. (919) 851-7024
www.stantec.com
License No. F-0672

DRAWN BY : C. B. BAKER DATE : 05-25-12
CHECKED BY : J. T. KELVINGTON DATE : 06-15-12

DESIGN ENGINEER OF RECORD: J. T. KELVINGTON DATE : 03-28-13

NORTH CAROLINA PROFESSIONAL SEAL 13406 ENGINEER JOSEPH T. KELVINGTON

REVISIONS						SHEET NO.
NO.	BY:	DATE:	NO.	BY:	DATE:	S-524
1			3			TOTAL SHEETS
2			4			836

Raleigh PDF Creator (Full).plt STRUCTURES PEN TABLE.tbl jgelle 2:26:10 PM 6/7/2013 U:\Structures\Y Fleming Rd\Drawing\Final\U-2524C_SD_BM_1.dgn

REINFORCING BAR SCHEDULE (WING WALLS)

BAR	NO.	SIZE	TYPE	LENGTH	WEIGHT
H1	2	7	6	13'-7"	56
H2	2	7	6	14'-4"	59
H3	2	7	6	15'-0"	61
H4	2	7	6	15'-9"	64
H5	2	7	6	16'-6"	67
H6	2	7	6	17'-2"	70
H7	2	7	6	17'-11"	73
H8	2	7	6	18'-8"	76
H9	2	7	6	19'-4"	79
H10	2	7	6	20'-1"	82
H11	2	7	6	20'-10"	85
H12	8	7	6	21'-6"	352
H13	2	7	7	14'-1"	58
H14	2	7	7	14'-9"	60
H15	2	7	7	15'-6"	63
H16	2	7	7	16'-2"	66
H17	2	7	7	16'-11"	69
H18	2	7	7	17'-7"	72
H19	2	7	7	18'-3"	75
H20	2	7	7	19'-0"	78
H21	2	7	7	19'-8"	80
H22	2	7	7	20'-5"	83
H23	2	7	7	21'-1"	86
H24	2	7	7	21'-9"	89
H25	6	7	7	21'-10"	268
H26	2	7	7	14'-4"	59
H27	2	7	7	15'-1"	62
H28	2	7	7	15'-11"	65
H29	2	7	7	16'-8"	68
H30	2	7	7	17'-5"	71
H31	2	7	7	18'-3"	75
H32	2	7	7	19'-0"	78
H33	2	7	7	19'-10"	81
H34	2	7	7	20'-7"	84
H35	2	7	7	21'-4"	87
H36	8	7	7	21'-10"	357
H37	2	7	6	14'-2"	58
H38	2	7	6	14'-11"	61
H39	2	7	6	15'-8"	64
H40	2	7	6	16'-5"	67
H41	2	7	6	17'-2"	70
H42	2	7	6	17'-11"	73
H43	2	7	6	18'-8"	76
H44	2	7	6	19'-5"	79
H45	2	7	6	20'-2"	82
H46	2	7	6	20'-11"	86
H47	8	7	6	21'-6"	352

BAR	NO.	SIZE	TYPE	LENGTH	WEIGHT
U4	24	4	4	3'-8"	59
U5	60	4	4	5'-10"	234
U6	42	4	4	4'-10"	136
V1	8	5	STR.	1'-10"	15
V2	8	5	STR.	2'-1"	17
V3	8	5	STR.	2'-4"	19
V4	8	5	STR.	2'-7"	22
V5	8	5	STR.	2'-10"	24
V6	8	5	STR.	3'-6"	29
V7	8	5	STR.	3'-9"	31
V8	8	5	STR.	4'-0"	33
V9	8	5	STR.	4'-3"	35
V10	8	5	STR.	4'-6"	38
V11	8	5	STR.	4'-9"	40
V12	8	5	STR.	5'-0"	42
V13	8	5	STR.	5'-3"	44
V14	8	5	STR.	5'-6"	46
V15	8	5	STR.	5'-9"	48
V16	8	5	STR.	6'-0"	50
V17	8	5	STR.	6'-3"	52
V18	8	5	STR.	6'-6"	54
V19	8	5	STR.	6'-9"	56
V20	8	5	STR.	7'-0"	58
V21	8	5	STR.	8'-4"	70
V22	8	5	STR.	8'-7"	72
V23	8	5	STR.	8'-10"	74
V24	8	5	STR.	9'-1"	76
V25	8	5	STR.	9'-4"	78
V26	8	5	STR.	9'-7"	80
V27	12	5	STR.	9'-10"	123
V28	8	5	STR.	10'-1"	84
V29	2	5	5	19'-7"	41
V30	2	5	5	20'-2"	42
V31	2	5	5	19'-8"	41
V32	2	5	5	19'-5"	41

* = EPOXY COATED REINF. STEEL

BAR TYPES

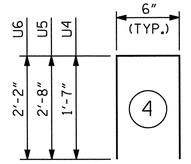

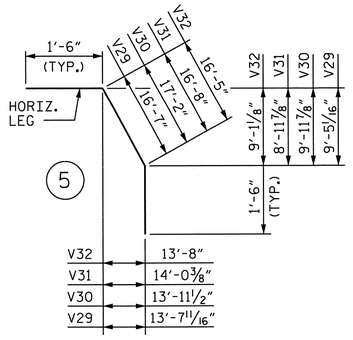

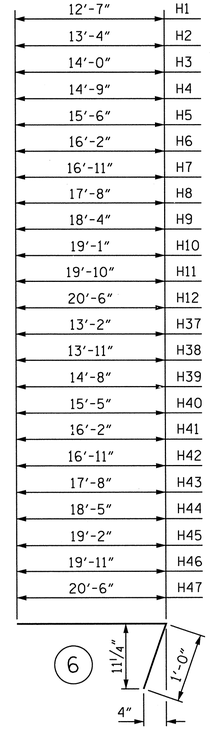

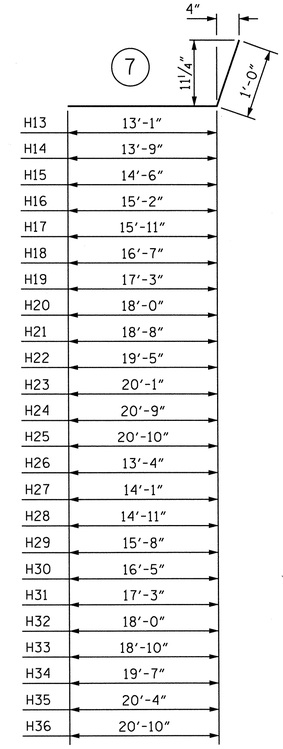

ALL BAR DIMENSIONS ARE OUT TO OUT

KEY

L = LENGTH OF EACH SPAN

NOTE:
POUR ② & ③ CAN NOT BE STARTED UNTIL BOTH ADJACENT ① POURS REACH A MINIMUM COMP. STRENGTH OF 3000 PSI.

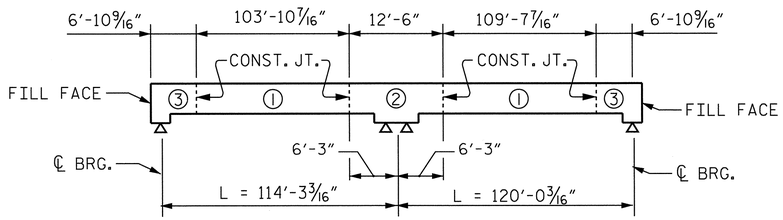

OPTIONAL POURING SEQUENCE- PRESTRESSED CONCRETE SUPERSTRUCTURE

(CONTINUOUS FOR LIVE LOAD)

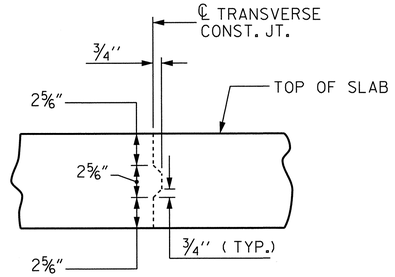

TRANSVERSE CONSTRUCTION JOINT DETAIL

NOTE: REINFORCING STEEL IN SLAB NOT SHOWN. LONGITUDINAL REINFORCING STEEL SHALL BE CONTINUOUS THRU JOINT

PROJECT NO. U-2524C

GUILFORD COUNTY

STATION: 274+26.98 -L-

SHEET 2 of 2

STATE OF NORTH CAROLINA
DEPARTMENT OF TRANSPORTATION
RALEIGH

SUPERSTRUCTURE BILL OF MATERIAL

REVISIONS						SHEET NO.
NO.	BY:	DATE:	NO.	BY:	DATE:	S-525
1			3			TOTAL SHEETS
2			4			836

Stantec Consulting Services Inc.
801 Jones Franklin Road
Suite 300
Raleigh, NC 27606
Tel. (919) 851-6866
Fax. (919) 851-7024
www.stantec.com
License No. F-0672

DRAWN BY : C. B. BAKER DATE : 05-25-12
CHECKED BY : J. T. KELVINGTON DATE : 06-15-12

DESIGN ENGINEER OF RECORD: J. T. KELVINGTON DATE : 03-28-13

NORTH CAROLINA PROFESSIONAL SEAL 13406 ENGINEER JOSEPH T. KELVINGTON

U:\Structures\Y Fleming Rd\Drawing\Final\U-2524C_SD_BM_2.dgn 6/7/2013 4:10:36 PM jgelle STRUCTURES PEN TABLE.tbl Raleigh PDF Creator (Full).plt

U:\Structures\Y Fleming Rd\Drawing\Final\U-2524C_SD_EB1.dgn 6/7/2013 2:26:25 PM jgelle STRUCTURES PEN TABLE.tbl Raleigh PDF Creator (Full).plt

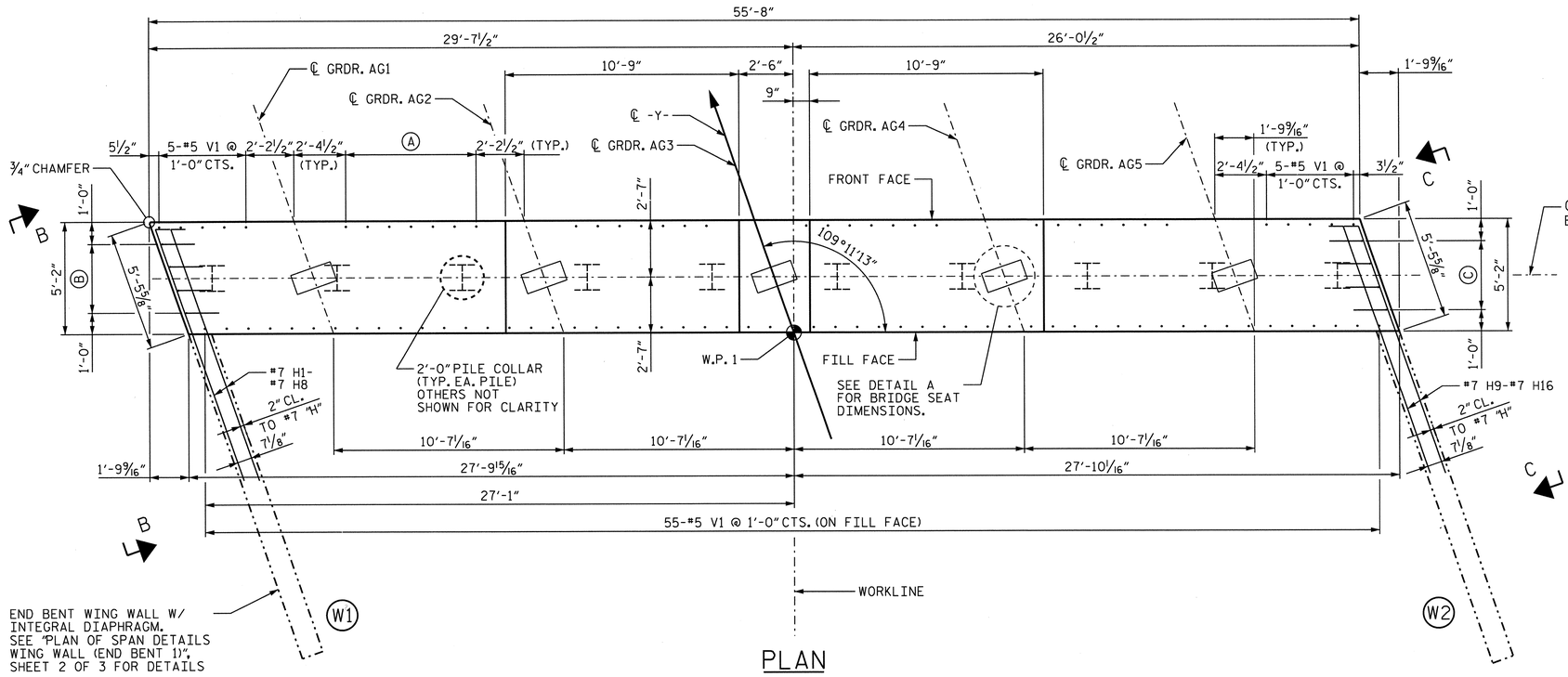

PLAN

(A) 7-#5 V1 @ 1'-0"± CTS. (TYP. BETWEEN GIRDERS)

(B) 4-#4 U1 @ 1-0"± CTS.

(C) 4-#4 U2 @ 1-0"± CTS.

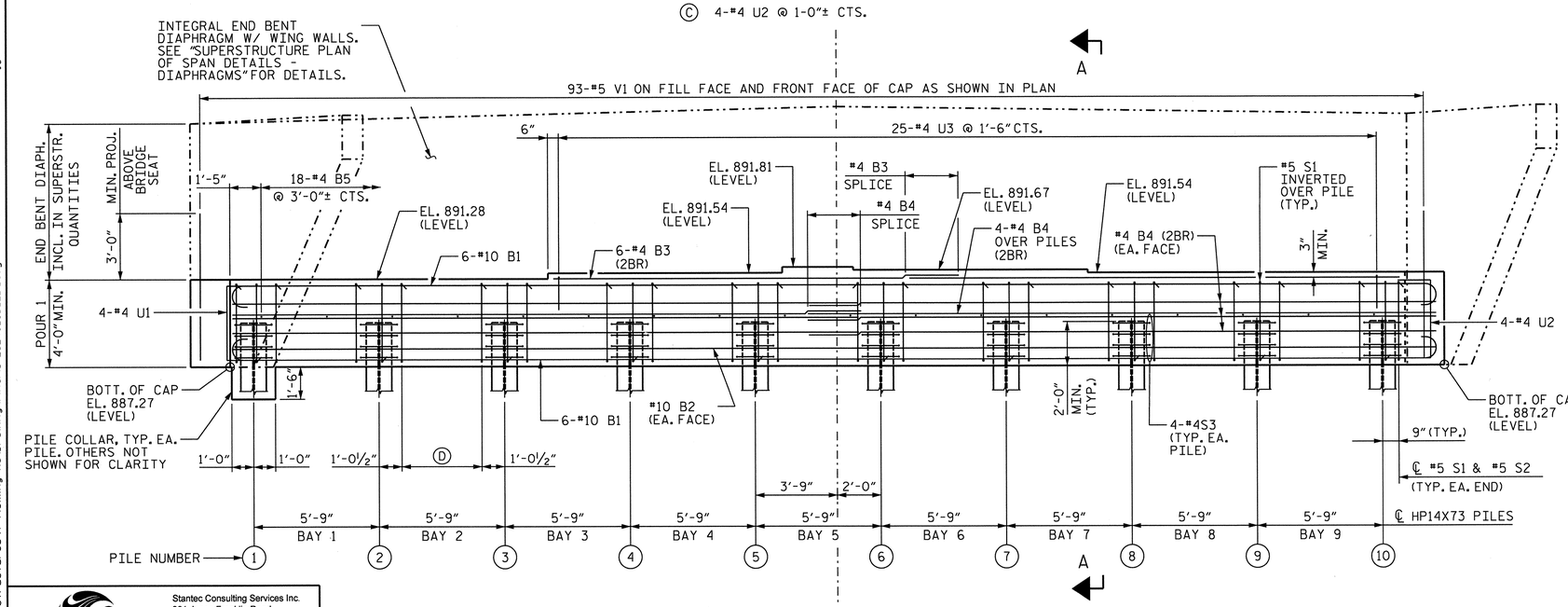

ELEVATION

(D) 5-#5 S1 & 5-#5 S2 @ 11" CTS. (TYP. EA. BAY)

NOTES

PIPE DRAINS MAY BE SHIFTED SLIGHTLY AS NECESSARY TO CLEAR REINFORCING STEEL.

INSTALL THE 4" DIA. DRAIN PIPE THROUGH THE WING WALL AS REQUIRED FOR REINFORCED BRIDGE APPROACH FILLS. SEE THE ROADWAY PLANS. REIFORCING STEEL IN THE WING WALL MAY BE SHIFTED AS NECESSARY TO CLEAR THE DRAIN PIPE.

2BR DENOTES 2 BAR RUN.

CHAMFERS ARE NOT REQUIRED EXCEPT AS NOTED.

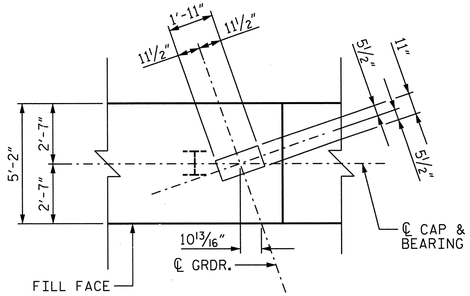

DETAIL A

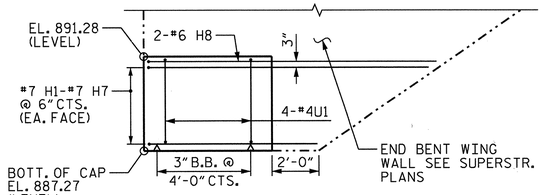

SECTION B-B

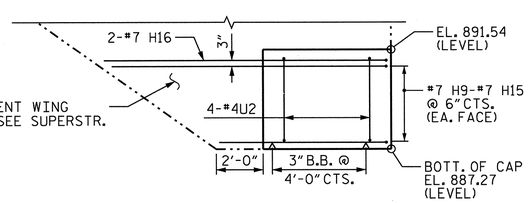

SECTION C-C

BAR	MIN. SPLICE
#4 B4	2'-5"
#4 B3	2'-5"

REINFORCING BAR SPLICES

PROJECT NO. U-2524C

GUILFORD COUNTY

STATION: 274+26.98 -L-

SHEET 1 of 2

STATE OF NORTH CAROLINA
DEPARTMENT OF TRANSPORTATION
RALEIGH

SUBSTRUCTURE
END BENT 1

Stantec
Stantec Consulting Services Inc.
801 Jones Franklin Road
Suite 300
Raleigh, NC 27606
Tel. (919) 851-6866
Fax. (919) 851-7024
www.stantec.com
License No. F-0672

DRAWN BY : V. T. DOAN DATE : 03-15-13
CHECKED BY : J. T. KELVINGTON DATE : 03-16-13

DESIGN ENGINEER OF RECORD: J. T. KELVINGTON DATE : 03-28-13

NORTH CAROLINA PROFESSIONAL SEAL 13406 ENGINEER JOSEPH T. KELVINGTON

REVISIONS						SHEET NO.
NO.	BY:	DATE:	NO.	BY:	DATE:	S-526
1			3			TOTAL SHEETS
2			4			836

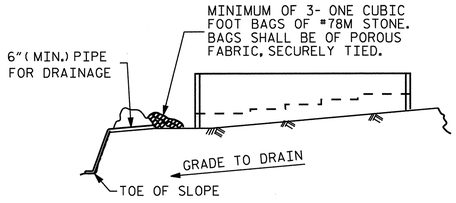

BAGGED STONE AND PIPE SHALL BE PLACED IMMEDIATELY AFTER COMPLETION OF END BENT EXCAVATION. PIPE MAY BE EITHER CONCRETE, CORRUGATED STEEL, CORRUGATED ALUMINUM ALLOY, OR CORRUGATED PLASTIC. PERFORATED PIPE WILL NOT BE ALLOWED.

BAGGED STONE SHALL REMAIN IN PLACE UNTIL THE ENGINEER DIRECTS THAT IT BE REMOVED. THE CONTRACTOR SHALL REMOVE AND DISPOSE OF SILT ACCUMULATIONS AT BAGGED STONE WHEN SO DIRECTED BY THE ENGINEER. BAGS SHALL BE REMOVED AND REPLACED WHENEVER THE ENGINEER DETERMINES THAT THEY HAVE DETERIORATED AND LOST THEIR EFFECTIVENESS.

NO SEPARATE PAYMENT WILL BE MADE FOR THIS WORK AND THE ENTIRE COST OF THIS WORK SHALL BE INCLUDED IN THE UNIT CONTRACT PRICE BID FOR THE SEVERAL PAY ITEMS.

TEMPORARY DRAINAGE AT END BENT

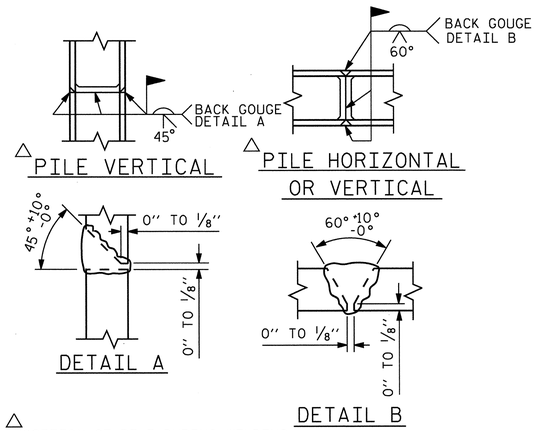

△ POSITION OF PILE DURING WELDING.

PILE SPLICE DETAILS

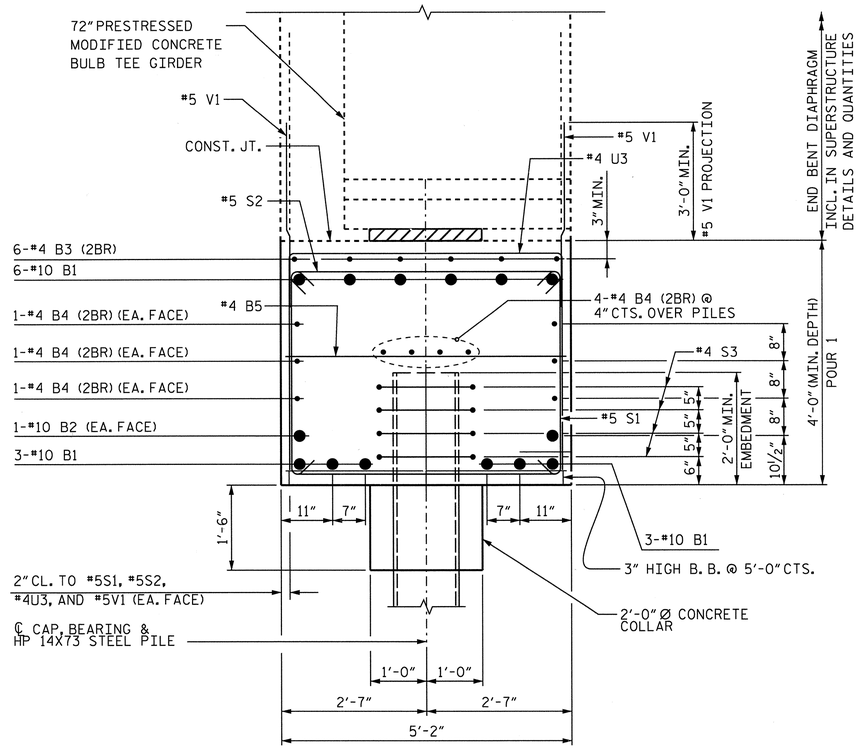

SECTION A-A

NOTES

TOP SURFACE AREAS OF THE END BENT CAP SHALL BE KEPT CLEAN AND FREE OF LAITANCE.

ROUGH FLOAT AND ROUGHEN THE TOP OF THE END BENT CAP TO PROVIDE MIN. SURFACE AMPLITUDE OF ¼", EXCEPT UNDER BEARING AREAS.

2BR DENOTES 2 BAR RUN.

BAR TYPES

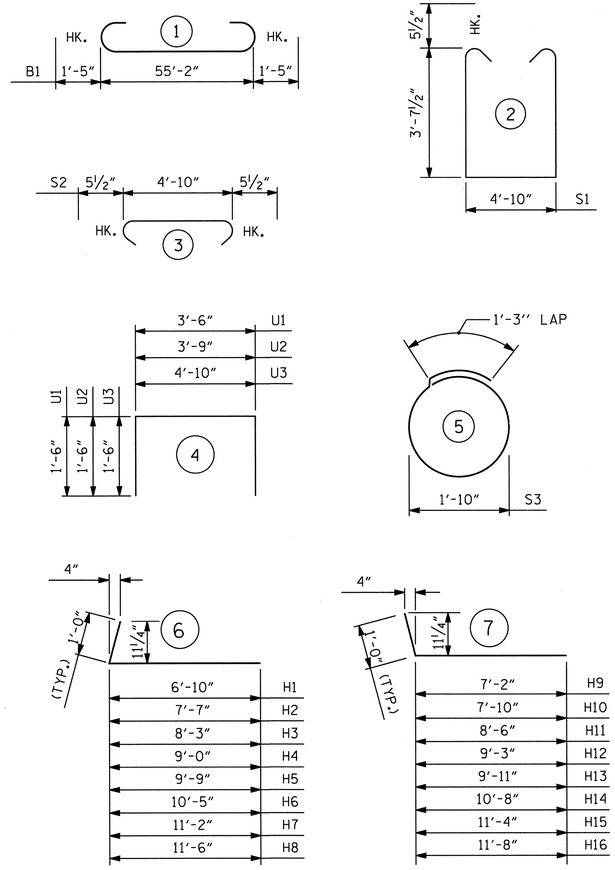

ALL BAR DIMENSIONS ARE OUT TO OUT.

BILL OF MATERIAL

END BENT 1

BAR	NO.	SIZE	TYPE	LENGTH	WEIGHT
B1	12	10	1	58'-0"	2,995
B2	2	10	STR.	54'-6"	469
B3	12	4	STR.	20'-8"	166
B4	20	4	STR.	29'-0"	387
B5	18	4	STR.	4'-10"	58
H1	2	7	6	7'-10"	32
H2	2	7	6	8'-7"	35
H3	2	7	6	9'-3"	38
H4	2	7	6	10'-0"	41
H5	2	7	6	10'-9"	44
H6	2	7	6	11'-5"	47
H7	2	7	6	12'-2"	50
H8	2	7	6	12'-6"	51
H9	2	7	7	8'-2"	33
H10	2	7	7	8'-10"	36
H11	2	7	7	9'-6"	39
H12	2	7	7	10'-3"	42
H13	2	7	7	10'-11"	45
H14	2	7	7	11'-8"	48
H15	2	7	7	12'-4"	50
H16	2	7	7	12'-8"	52
S1	57	5	2	13'-0"	773
S2	47	5	3	5'-9"	282
S3	40	4	5	7'-0"	187
U1	4	4	4	6'-6"	17
U2	4	4	4	6'-9"	18
U3	25	4	4	7'-10"	131
V1	93	5	STR.	7'-3"	703

REINFORCING STEEL	LBS 6,869
CLASS A CONCRETE BREAKDOWN	
POUR 1 - CAP	C.Y. 46.6
CLASS A CONCRETE TOTAL	C.Y. 46.6
HP14X73 PILES	
NO. 10	FEET 550

PROJECT NO. U-2524C

GUILFORD COUNTY

STATION: 274+26.98 -L-

SHEET 2 of 2

STATE OF NORTH CAROLINA
DEPARTMENT OF TRANSPORTATION
RALEIGH

SUBSTRUCTURE

END BENT 1 DETAILS

REVISIONS						SHEET NO.
NO.	BY:	DATE:	NO.	BY:	DATE:	S-527
1			3			TOTAL SHEETS
2			4			83

Stantec Consulting Services Inc.
801 Jones Franklin Road
Suite 300
Raleigh, NC 27606
Tel. (919) 851-6866
Fax. (919) 851-7024
www.stantec.com
License No. F-0672

DRAWN BY : V. T. DOAN DATE : 05-25-12
CHECKED BY : S. S. YUEN DATE : 06-15-12

DESIGN ENGINEER OF RECORD: J. T. KELVINGTON DATE : 03-28-13

NORTH CAROLINA PROFESSIONAL SEAL 13406 ENGINEER JOSEPH KELVINGTON

U:\Structures\Y Fleming Rd\Drawing\Final\U-2524C_SD_EB1_3.dgn 6/7/2013 2:26:27 PM jgelle STRUCTURES PEN TABLE.tbl
Raleigh PDF Creator (Full).plt

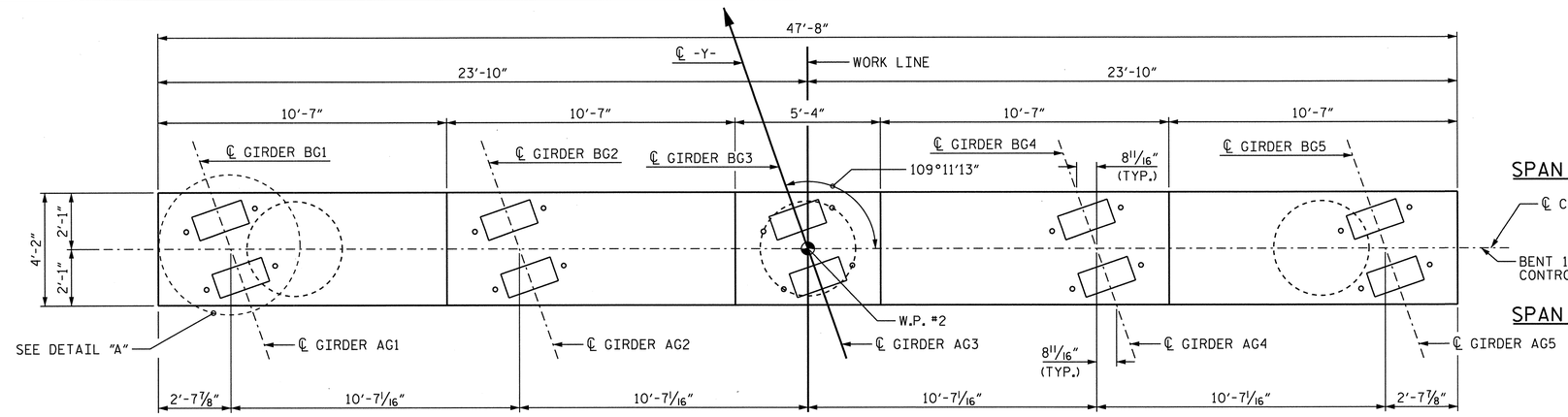

PLAN

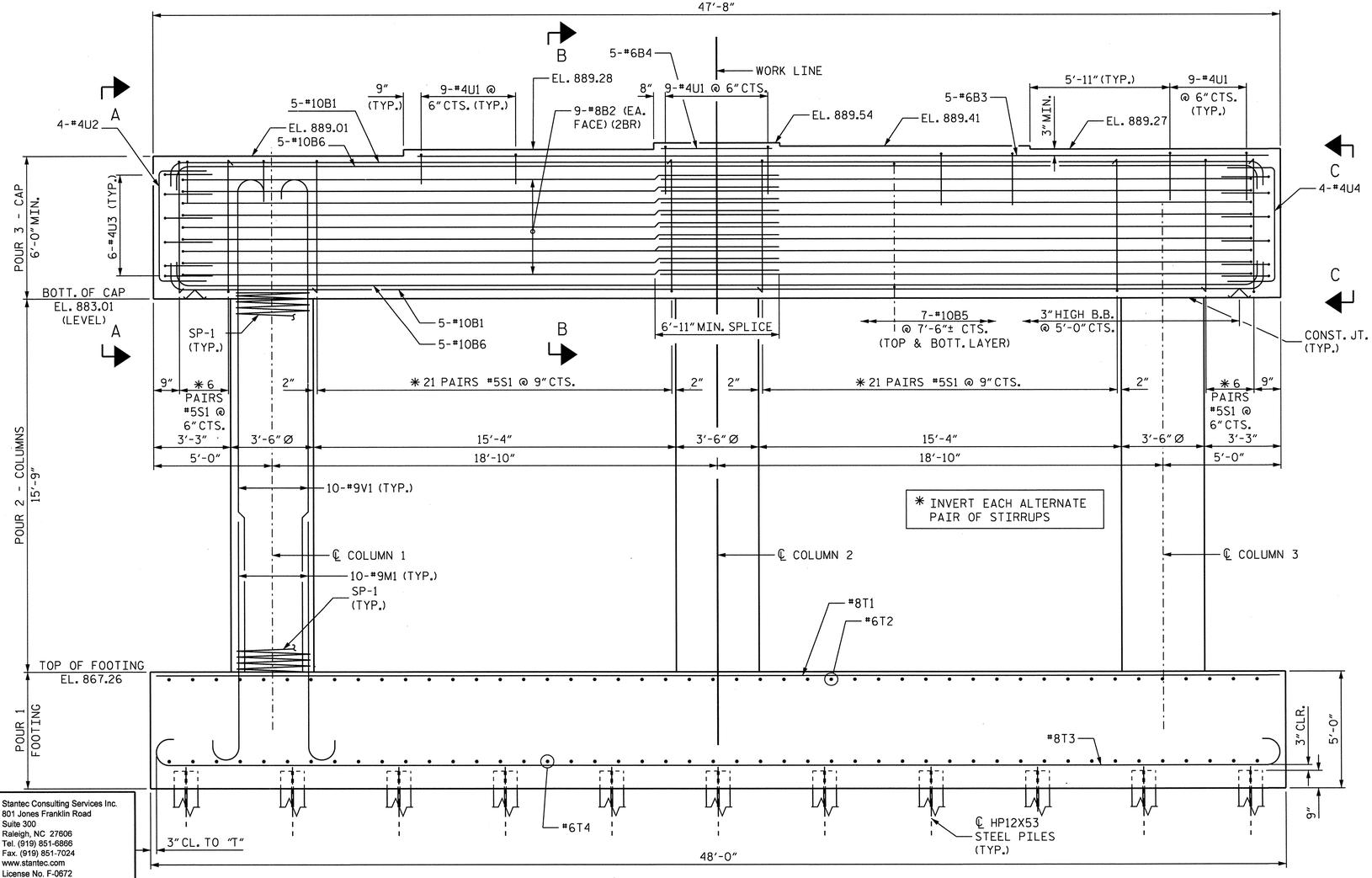

ELEVATION

SPAN B

℄ CAP

BENT 1 CONTROL LINE

SPAN A

NOTES:

STIRRUPS IN CAP MAY BE SHIFTED AS NECESSARY TO CLEAR ANCHOR BOLTS.

HOOKS ON "V" BARS MAY BE TURNED AS NECESSARY FOR PLACING REINF. STEEL.

FOR PILE SPLICE DETAILS, SEE END BENT 1 SHT. 2 OF 2.

FOR SECTION A-A, SECTION B-B, AND SECTION C-C, SEE BENT 1 SHT. 3 OF 3.

2BR DENOTES 2 BAR RUN.

FOR MASS CONCRETE, SEE SPECIAL PROVISIONS.

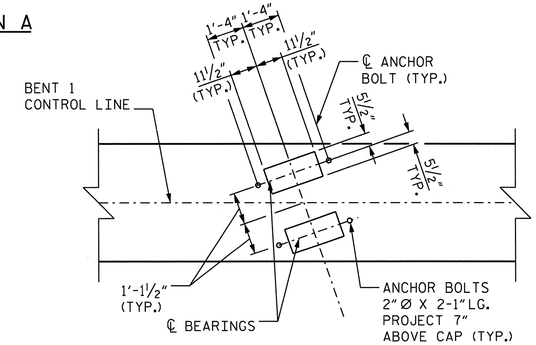

DETAIL A

PROJECT NO. U-2524C

GUILFORD COUNTY

STATION: 274+26.98 -L-

SHEET 1 of 3

STATE OF NORTH CAROLINA
DEPARTMENT OF TRANSPORTATION
RALEIGH

SUBSTRUCTURE
BENT #1

REVISIONS						SHEET NO.
NO.	BY:	DATE:	NO.	BY:	DATE:	S-528
1			3			TOTAL SHEETS
2			4			836

Stantec
Stantec Consulting Services Inc.
801 Jones Franklin Road
Suite 300
Raleigh, NC 27606
Tel. (919) 851-6866
Fax. (919) 851-7024
www.stantec.com
License No. F-0672

DRAWN BY : C. B. BAKER DATE : 05-25-12
CHECKED BY : J. T. KELVINGTON DATE : 06-15-12
DESIGN ENGINEER OF RECORD: J. T. KELVINGTON DATE : 03-28-13

NORTH CAROLINA PROFESSIONAL SEAL 13406 ENGINEER JOSEPH T. KELVINGTON

U:\Structures\Y Fleming Rd\Drawing\Final\U-2524C_SD_IB_1.dgn 6/7/2013 2:26:29 PM jgelle STRUCTURES PEN TABLE.tbl Raleigh PDF Creator (Full).plt

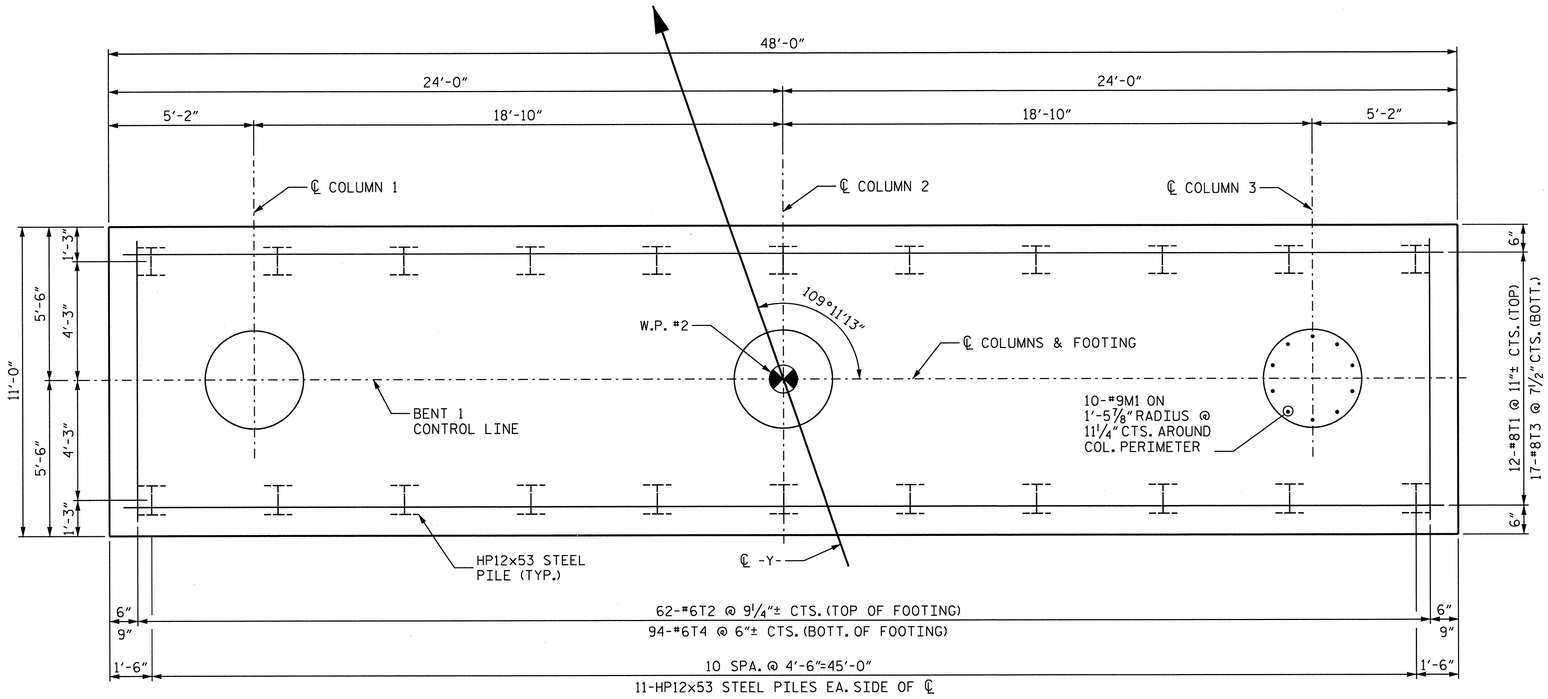

PLAN OF FOOTING

NOTE: M1 BARS SHOWN ARE TYPICAL @ EA. COLUMN

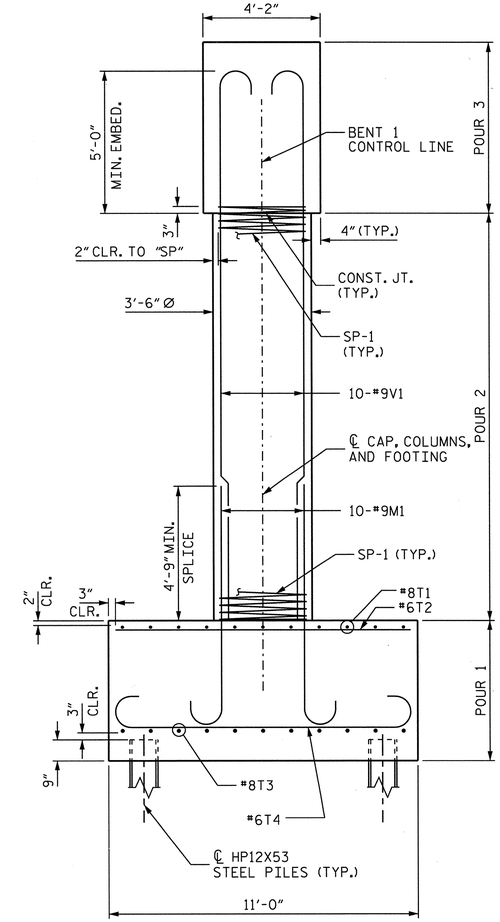

END ELEVATION

PROJECT NO. U-2524C

GUILFORD COUNTY

STATION: 274+26.98 -L-

SHEET 2 of 3

STATE OF NORTH CAROLINA
DEPARTMENT OF TRANSPORTATION
RALEIGH

SUBSTRUCTURE
BENT #1

REVISIONS						SHEET NO.
NO.	BY:	DATE:	NO.	BY:	DATE:	S-529
1			3			TOTAL SHEETS
2			4			836

NORTH CAROLINA PROFESSIONAL SEAL 13406 ENGINEER JOSEPH T. KELVINGTON

Stantec
Stantec Consulting Services Inc.
801 Jones Franklin Road
Suite 300
Raleigh, NC 27606
Tel. (919) 851-6866
Fax. (919) 851-7024
www.stantec.com
License No. F-0672

DRAWN BY : C. B. BAKER DATE : 05-25-12
CHECKED BY : J. T. KELVINGTON DATE : 06-15-12

DESIGN ENGINEER OF RECORD: J. T. KELVINGTON DATE : 03-28-13

U:\Structures\Y Fleming Rd\Drawing\Final\U-2524C_SD_1B_2.dgn 6/7/2013 2:26:31 PM Jgelle STRUCTURES PEN TABLE.tbl Raleigh PDF Creator (Full).plt

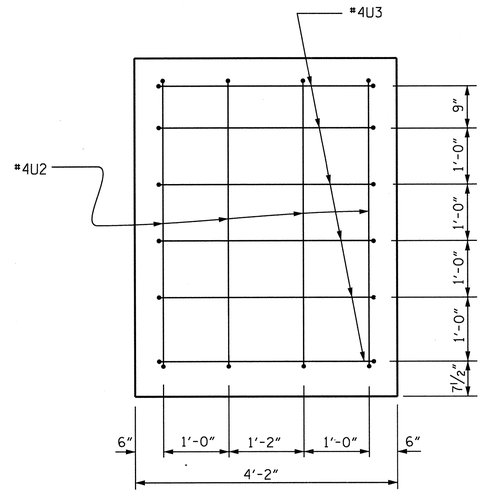

SECTION A-A

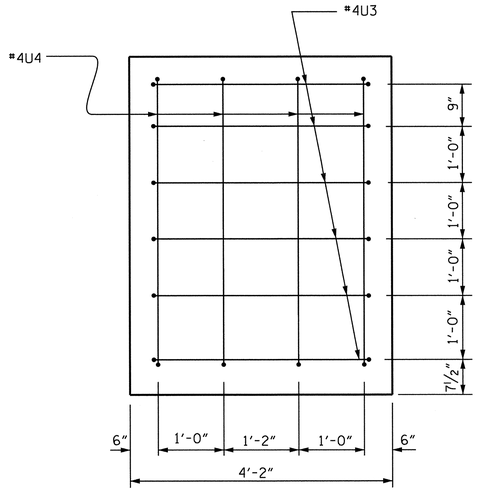

SECTION C-C

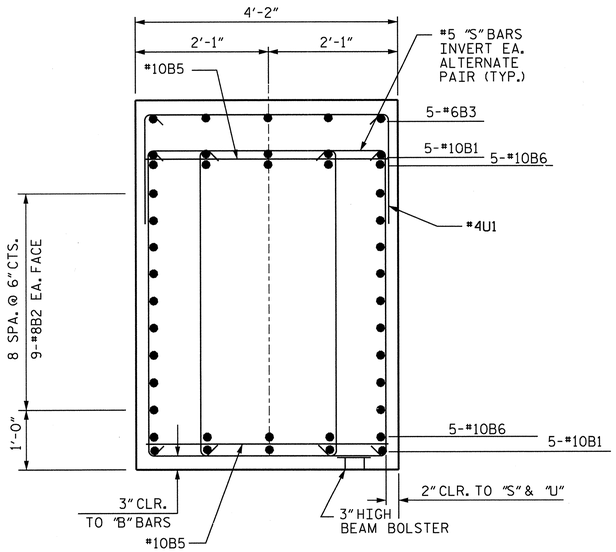

SECTION B-B

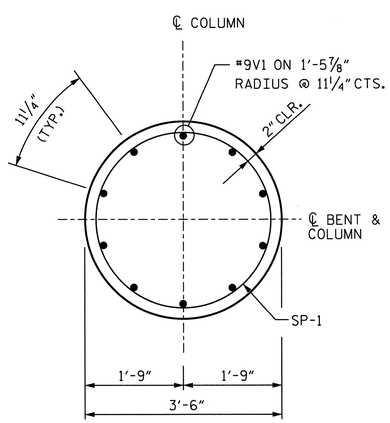

SECTION THRU COLUMN
TYPICAL ALL COLUMNS

BAR TYPES

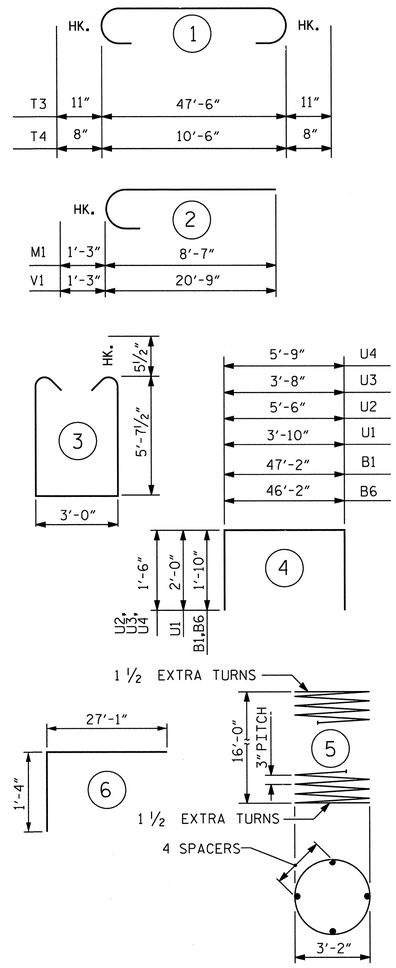

ALL BAR DIMENSIONS ARE OUT TO OUT.

BILL OF MATERIAL

BENT #1

BAR	NO.	SIZE	TYPE	LENGTH	WEIGHT
B1	10	10	4	50'-10"	2187
B2	36	8	6	28'-5"	2731
B3	5	6	STR	36'-7"	275
B4	5	6	STR	4'-10"	36
B5	14	10	STR	3'-10"	231
B6	10	10	4	49'-10"	2144
M1	30	9	2	9'-10"	1003
S1	108	5	3	15'-2"	1708
T1	12	8	STR	47'-6"	1522
T2	62	6	STR	10'-6"	978
T3	17	8	1	49'-4"	2239
T4	94	6	1	11'-10"	1671
U1	45	4	4	7'-10"	235
U2	4	4	4	8'-6"	23
U3	12	4	4	6'-8"	53
U4	4	4	4	8'-9"	23
V1	30	9	2	22'-0"	2244
REINFORCING STEEL				LBS.	19303
SP-1	3	**	5	658'-0"	1319

SPIRAL COLUMN		
REINFORCING STEEL	LBS.	1319
CLASS A CONCRETE BREAKDOWN		
POUR #1 FOOTINGS	C. Y.	97.7
POUR #2 COLUMNS	C. Y.	16.8
POUR #3 CAP	C. Y.	46.0
TOTAL	C. Y.	160.5
HP 12 X 53 STEEL PILES		
NO. 22	FT.	770
FOUNDATION EXCAVATION	LUMP SUM	

** THE SP-1 SPIRAL REINFORCING STEEL SHALL BE W20 OR D-20 COLD DRAWN WIRE OR #4 PLAIN OR DEFORMED BAR.

PROJECT NO. U-2524C

GUILFORD COUNTY

STATION: 274+26.98 -L-

SHEET 3 OF 3

STATE OF NORTH CAROLINA
DEPARTMENT OF TRANSPORTATION
RALEIGH

SUBSTRUCTURE
BENT #1

REVISIONS						SHEET NO.
NO.	BY:	DATE:	NO.	BY:	DATE:	S-530
1			3			TOTAL SHEETS
2			4			836

Stantec
Stantec Consulting Services Inc.
801 Jones Franklin Road
Suite 300
Raleigh, NC 27606
Tel. (919) 851-6866
Fax. (919) 851-7024
www.stantec.com
License No. F-0672

DRAWN BY : V. T. DOAN DATE : 05-25-12
CHECKED BY : S. S. YUEN DATE : 06-15-12

DESIGN ENGINEER OF RECORD: J. T. KELVINGTON DATE : 03-28-13

NORTH CAROLINA PROFESSIONAL SEAL 13406 ENGINEER JOSEPH T. KELVINGTON

U:\Structures\Y Fleming Rd\Drawing\Final\U-2524C_SD_1B_3.dgn 6/7/2013 2:26:32 PM jgelle STRUCTURES PEN TABLE.tbl Raleigh PDF Creator (Full).plt

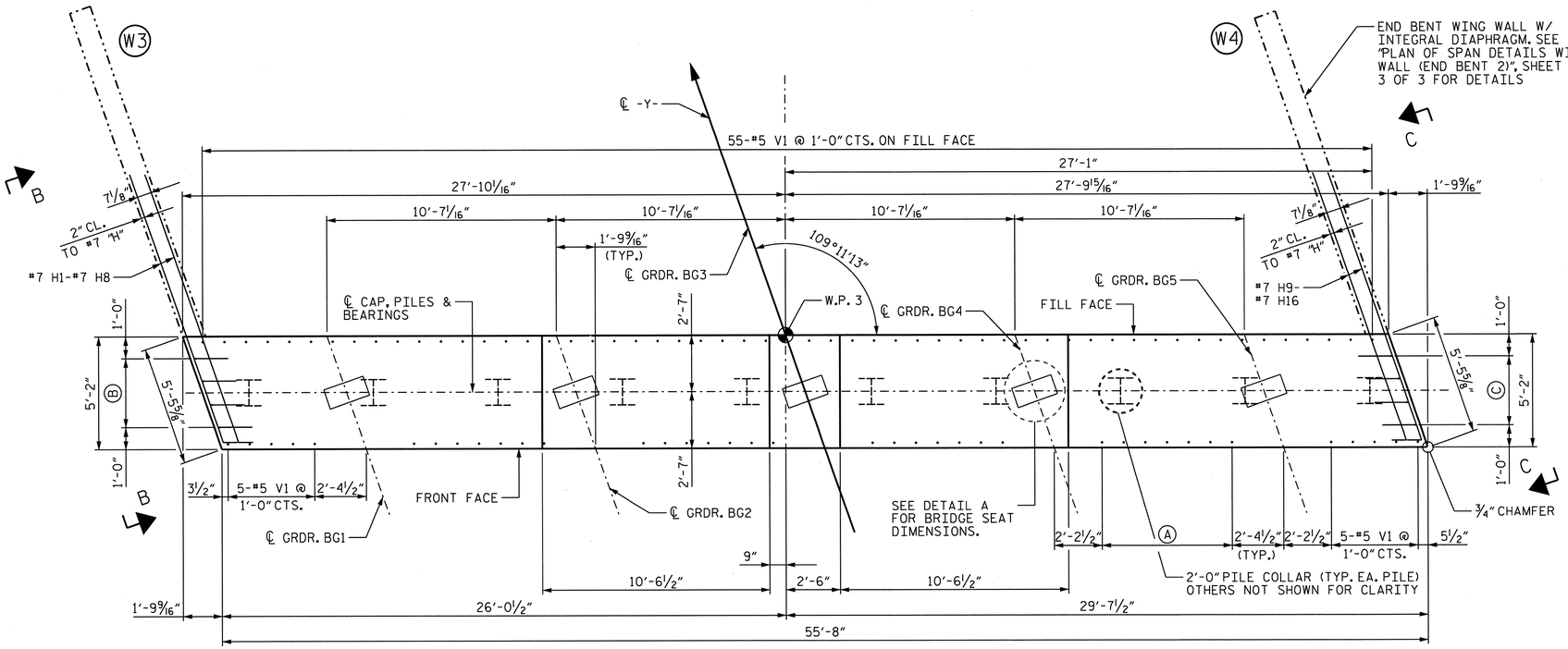

PLAN

Ⓐ 7-#5 V1 @ 1'-0"± CTS. (TYP. BETWEEN GIRDERS)

Ⓑ 4-#4 U1 @ 1-0"± CTS.

Ⓒ 4-#4 U2 @ 1-0"± CTS.

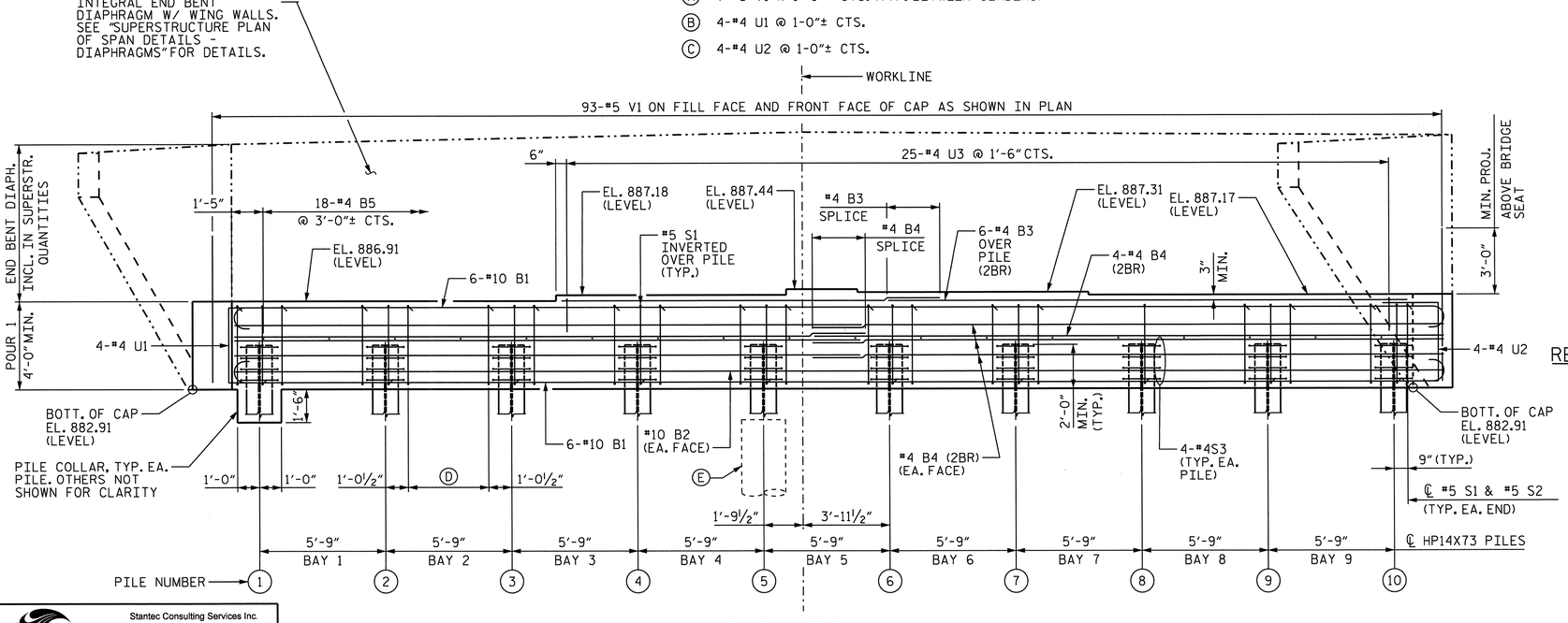

ELEVATION

Ⓓ 5-#5 S1 @ 11" CTS. (TYP. EA. BAY) W/ 5-#5 S2

Ⓔ PILE EXCAVATION IN SOIL TO BE ADVANCED TO EL 880.00 (TYP. PILES 1-5, PILE 5 SHOWN PILES 1-4 ARE TYPICAL)

NOTES

PIPE DRAINS MAY BE SHIFTED SLIGHTLY AS NECESSARY TO CLEAR REINFORCING STEEL.

INSTALL THE 4" DIA. DRAIN PIPE THROUGH THE WING WALL AS REQUIRED FOR REINFORCED BRIDGE APPROACH FILLS. SEE THE ROADWAY PLANS. REIFORCING STEEL IN THE WING WALL MAY BE SHIFTED AS NECESSARY TO CLEAR THE DRAIN PIPE.

2BR DENOTES 2 BAR RUN.

CHAMFER NOT REQUIRED EXCEPT AS NOTED.

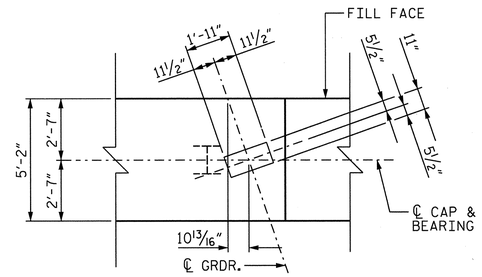

DETAIL A

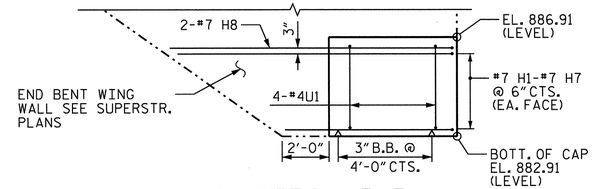

SECTION B-B

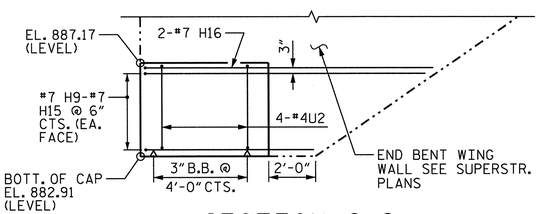

SECTION C-C

BAR	MIN. SPLICE
#4 B4	2'-5"
#4 B3	2'-5"

REINFORCING BAR SPLICES

PROJECT NO. U-2524C

GUILFORD COUNTY

STATION: 274+26.98 -L-

SHEET 1 of 2

STATE OF NORTH CAROLINA
DEPARTMENT OF TRANSPORTATION
RALEIGH

SUBSTRUCTURE
END BENT 2

REVISIONS						SHEET NO.
NO.	BY:	DATE:	NO.	BY:	DATE:	S-531
1			3			TOTAL SHEETS
2			4			836

NORTH CAROLINA PROFESSIONAL SEAL 13406 ENGINEER JOSEPH T. KELVINGTON

Stantec
Stantec Consulting Services Inc.
801 Jones Franklin Road
Suite 300
Raleigh, NC 27606
Tel. (919) 851-6866
Fax. (919) 851-7024
www.stantec.com
License No. F-0672

DRAWN BY : V. T. DOAN DATE : 05-25-12

CHECKED BY : S. S. YUEN DATE : 06-15-12

DESIGN ENGINEER OF RECORD: J. T. KELVINGTON DATE : 03-28-13

U:\Structures\Y Fleming Rd\Drawing\Final\U-2524C_SD_EB2.dgn 6/7/2013 2:26:34 PM jgelle STRUCTURES PEN TABLE.tbl Raleigh PDF Creator (Full).plt

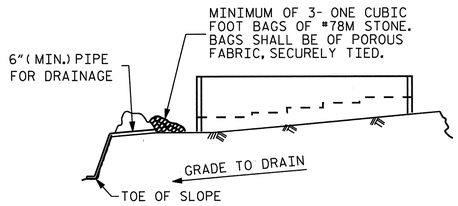

BAGGED STONE AND PIPE SHALL BE PLACED IMMEDIATELY AFTER COMPLETION OF END BENT EXCAVATION. PIPE MAY BE EITHER CONCRETE, CORRUGATED STEEL, CORRUGATED ALUMINUM ALLOY, OR CORRUGATED PLASTIC. PERFORATED PIPE WILL NOT BE ALLOWED.

BAGGED STONE SHALL REMAIN IN PLACE UNTIL THE ENGINEER DIRECTS THAT IT BE REMOVED. THE CONTRACTOR SHALL REMOVE AND DISPOSE OF SILT ACCUMULATIONS AT BAGGED STONE WHEN SO DIRECTED BY THE ENGINEER. BAGS SHALL BE REMOVED AND REPLACED WHENEVER THE ENGINEER DETERMINES THAT THEY HAVE DETERIORATED AND LOST THEIR EFFECTIVENESS.

NO SEPARATE PAYMENT WILL BE MADE FOR THIS WORK AND THE ENTIRE COST OF THIS WORK SHALL BE INCLUDED IN THE UNIT CONTRACT PRICE BID FOR THE SEVERAL PAY ITEMS.

TEMPORARY DRAINAGE AT END BENT

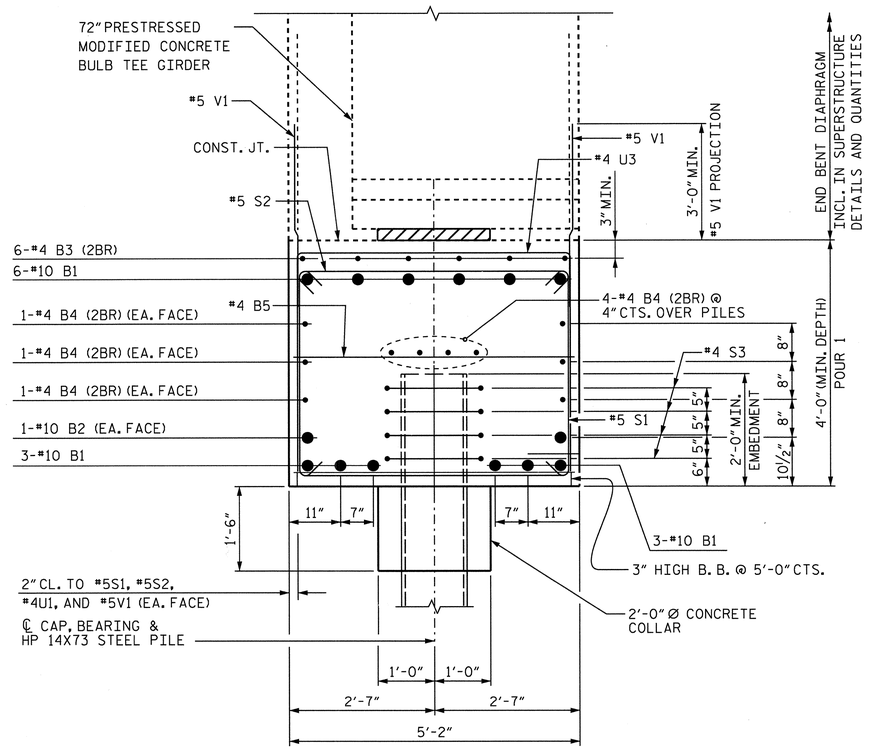

SECTION A-A

NOTES

TOP SURFACE AREAS OF THE END BENT CAP SHALL BE KEPT CLEAN AND FREE OF LAITANCE.

ROUGH FLOAT AND ROUGHEN THE TOP OF THE END BENT CAP TO PROVIDE MIN. SURFACE AMPLITUDE OF 1/4", EXCEPT UNDER BEARING AREAS.

2BR DENOTES 2 BAR RUN.

FOR PILE SPLICE DETAILS, SEE END BENT 1 SHEET 2 OF 2.

BAR TYPES

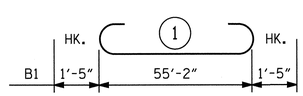

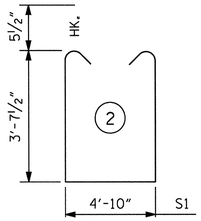

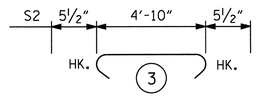

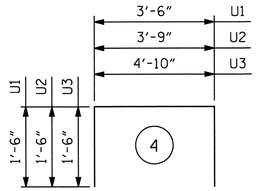

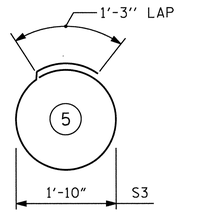

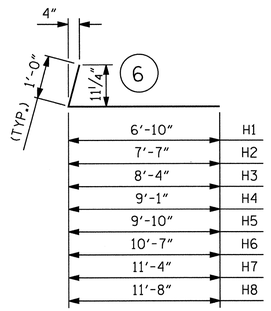

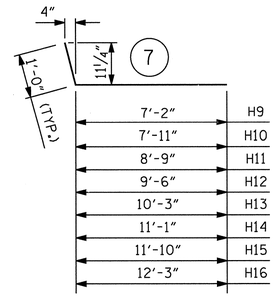

ALL BAR DIMENSIONS ARE OUT TO OUT.

BILL OF MATERIAL

END BENT 2

BAR	NO.	SIZE	TYPE	LENGTH	WEIGHT
B1	12	10	1	58'-0"	2,995
B2	2	10	STR.	54'-6"	469
B3	12	4	STR.	20'-8"	166
B4	20	4	STR.	29'-0"	387
B5	18	4	STR.	4'-10"	58
H1	2	6	6	7'-10"	32
H2	2	6	6	8'-7"	35
H3	2	6	6	9'-4"	38
H4	2	6	6	10'-1"	41
H5	2	6	6	10'-10"	44
H6	2	6	6	11'-7"	47
H7	2	6	6	12'-4"	50
H8	2	6	6	12'-8"	52
H9	2	6	7	8-2"	33
H10	2	6	7	8'-11"	36
H11	2	6	7	9'-9"	40
H12	2	6	7	10'-6"	43
H13	2	6	7	11'-3"	46
H14	2	6	7	12'-1"	49
H15	2	6	7	12'-10"	52
H16	2	6	7	13'-3"	54
S1	57	5	2	13'-0"	773
S2	47	5	3	5'-9"	282
S3	40	4	5	7'-0"	187
U1	4	4	4	6'-6"	17
U2	4	4	4	6'-9"	18
U3	25	4	4	7'-10"	131
V1	93	5	STR.	7'-3"	703

REINFORCING STEEL	LBS	6,878
CLASS A CONCRETE BREAKDOWN		
POUR 1 - CAP	C.Y.	46.7
CLASS A CONCRETE TOTAL	C.Y.	46.7
HP14X73 PILES		
NO. 10	FEET	425
PILE EXCAVATION NOT IN SOIL		
NO. 5	FEET	15

PROJECT NO. U-2524C

GUILFORD COUNTY

STATION: 274+26.98 -L-

SHEET 2 of 2

STATE OF NORTH CAROLINA
DEPARTMENT OF TRANSPORTATION
RALEIGH

SUBSTRUCTURE

END BENT 2 DETAILS

REVISIONS						SHEET NO.
NO.	BY:	DATE:	NO.	BY:	DATE:	S-532
1			3			TOTAL SHEETS
2			4			836

Stantec Consulting Services Inc.
801 Jones Franklin Road
Suite 300
Raleigh, NC 27606
Tel. (919) 851-6866
Fax. (919) 851-7024
www.stantec.com
License No. F-0672

DRAWN BY : V. T. DOAN DATE : 05-25-12
CHECKED BY : S. S. YUEN DATE : 06-15-12
DESIGN ENGINEER OF RECORD: J. T. KELVINGTON DATE : 03-28-13

NORTH CAROLINA PROFESSIONAL SEAL 13406 ENGINEER JEFFERY T. KELVINGTON

U:\Structures\Y Fleming Rd\Drawing\Final\U-2524C_SD_EB2_3.dgn 6/7/2013 2:26:36 PM jgelie STRUCTURES PEN TABLE.tbl Raleigh PDF Creator (Full).plt

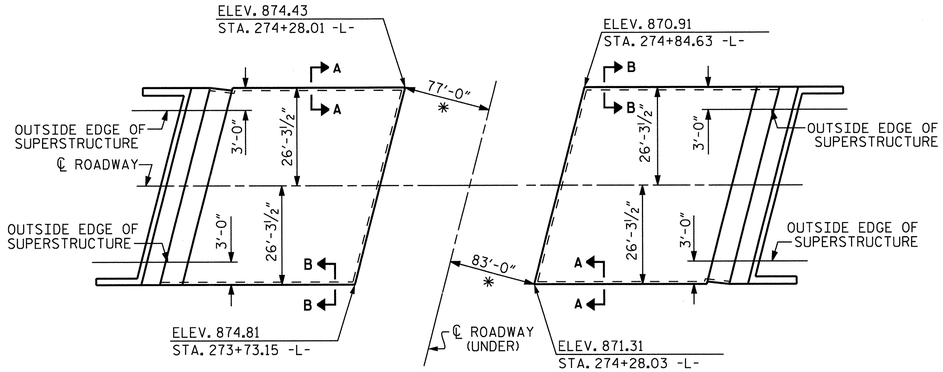

PLAN OF SLOPE PROTECTION

✱ RADIAL DIMENSION

GENERAL NOTES

SLOPE PROTECTION SHALL BE PLACED UNDER THE ENDS OF THE BRIDGE AS SHOWN IN THE DETAILS. FOR BERM WIDTH, SEE GENERAL DRAWING.

CONCRETE SHALL BE CLASS "B". THE CONCRETE SURFACE SHALL BE FLOATED WITH A WOODEN FLOAT AND FINISHED. WELDED WIRE FABRIC REINFORCING SHALL BE 6 X 6 - W1.4 X W1.4, 60" WIDE. SLOPE PROTECTION SHALL BE POURED IN 5' STRIPS AS SHOWN IN THE "POURING DETAIL" WITH 2'-0" LONG #4 BARS PLACED ALONG THE SLOPE BETWEEN STRIPS AT 1'-6" MAXIMUM SPACING. SLOPE PROTECTION MAY BE POURED IN ALTERNATE 4' AND 5' STRIPS AS SHOWN IN THE "OPTIONAL POURING DETAIL" WITH ADJACENT RUNS OF WELDED WIRE FABRIC LAPPING AT LEAST 6". THE COST OF THE WELDED WIRE FABRIC AND #4 BARS, IF USED, SHALL BE INCLUDED IN THE CONTRACT UNIT PRICE BID PER SQUARE YARD FOR SLOPE PROTECTION.

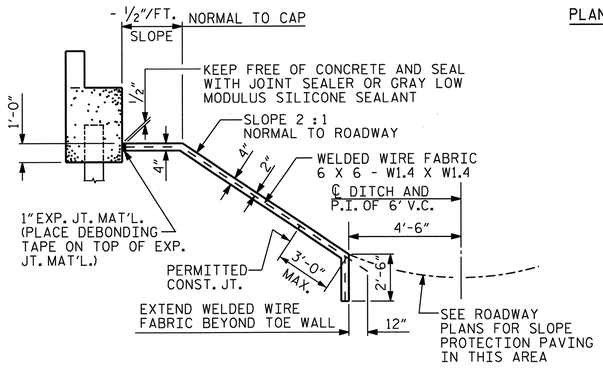

SECTION ALONG ℄ ROADWAY WHEN FILL CATCHES IN DITCH

BRIDGE @ STA. 274+26.98 -L-	4 INCH SLOPE PROTECTION	✱ WELDED WIRE FABRIC 60 INCHES WIDE
	SQUARE YARDS	APPROX. L.F.
END BENT 1	216	432
END BENT 2	209	418

✱ QUANTITY SHOWN IS BASED ON 5' POURS.

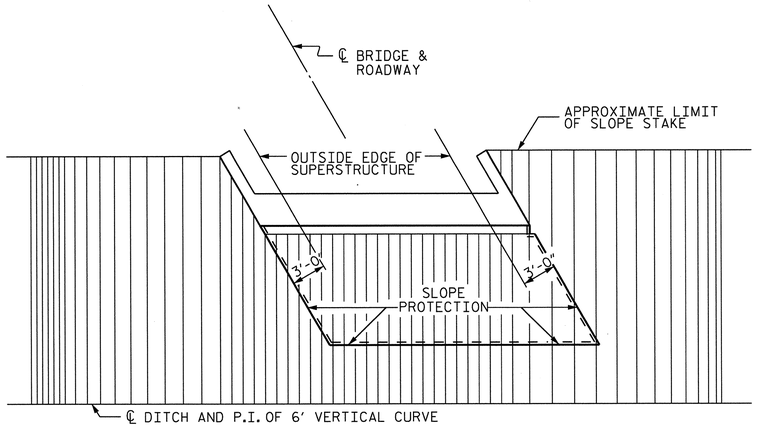

PLAN - END BENT WITH SWEPT BACK WINGS - SKEWED

(2:1 SLOPE)

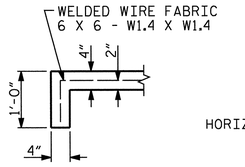

SECTION A-A

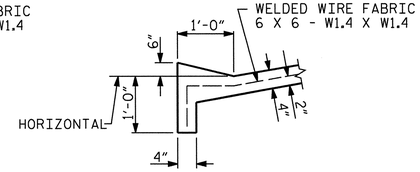

SECTION B-B

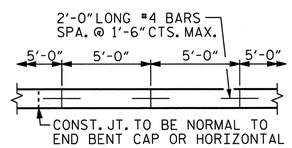

STRIP WIDTHS MAY VARY IN CURVED PORTION.

POURING DETAIL

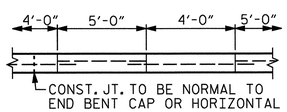

POUR A 4'-0" STRIP FIRST. STRIP WIDTHS MAY VARY IN CURVED PORTION.

OPTIONAL POURING DETAIL

PROJECT NO. U-2524C

GUILFORD COUNTY

STATION: 274+26.98 -L-

STATE OF NORTH CAROLINA
DEPARTMENT OF TRANSPORTATION
RALEIGH

STANDARD

SLOPE PROTECTION DETAILS

REVISIONS						SHEET NO.
NO.	BY:	DATE:	NO.	BY:	DATE:	S-533
1			3			TOTAL SHEETS
2			4			836

STD. NO. SP1 (SHT 3)

Stantec
Stantec Consulting Services Inc.
801 Jones Franklin Road
Suite 300
Raleigh, NC 27606
Tel. (919) 851-6866
Fax. (919) 851-7024
www.stantec.com
License No. F-0672

ASSEMBLED BY : J. B. GEILE	DATE : 05-03-12		
CHECKED BY : T. R. DUDECK	DATE : 05-03-12		
DRAWN BY : ELR 5/92	REV. 5/1/06	TLA/GM	DESIGN ENGINEER OF RECORD: J. T. KELVINGTON DATE : 03-28-13
CHECKED BY : GRP 6/92	REV. 10/1/11	MAA/GM	
	REV. 12/21/11	MAA/GM	

SEAL 13406 — NORTH CAROLINA PROFESSIONAL ENGINEER — JOSEPH T. KELVINGTON

U:\Structures\V Fleming Rd\Drawing\Final\U-2524C_SD_SP1_12.dgn 6/7/2013 2:26:48 PM jgeile

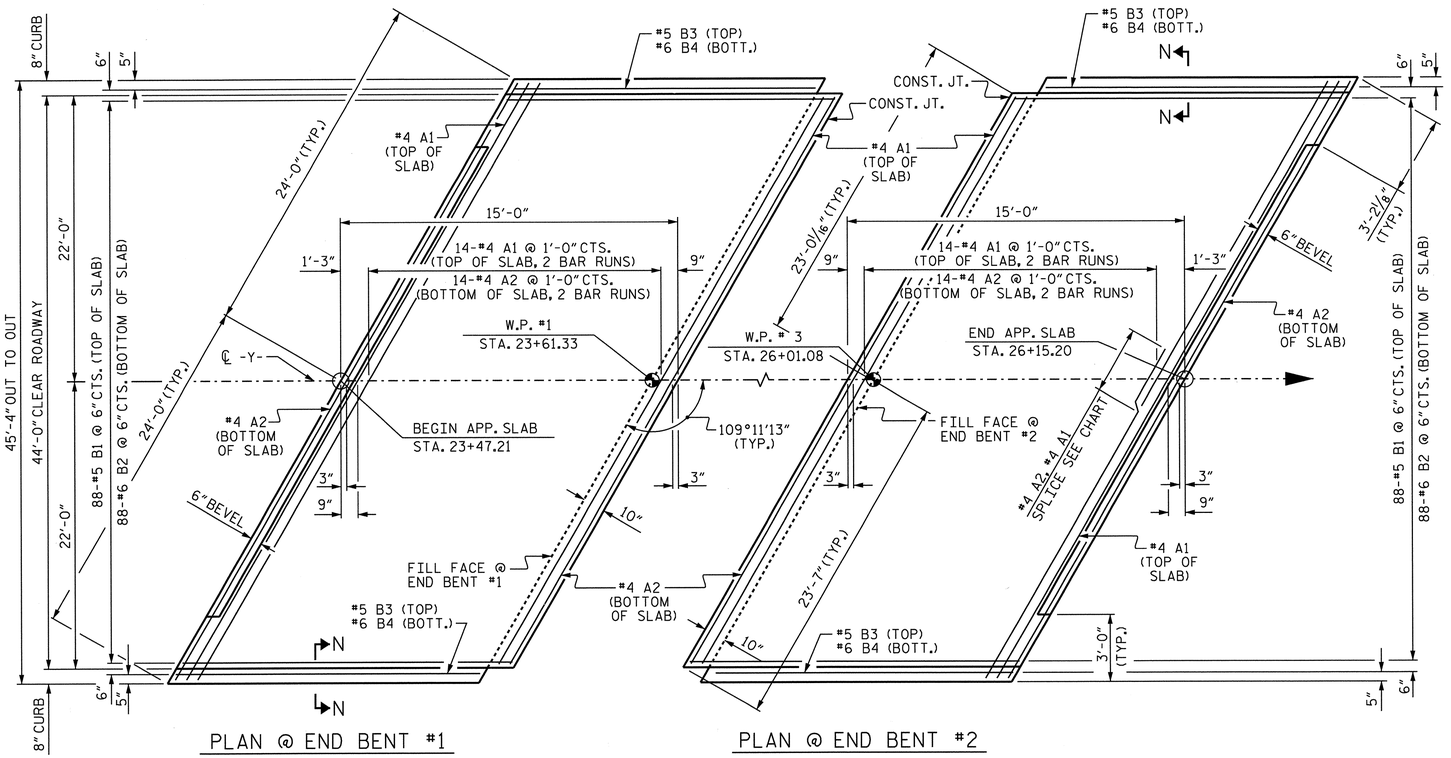

DIMENSIONS SHOWN ARE TYPICAL FOR BOTH APPROACH SLABS

NOTES

APPROACH SLAB SHALL NOT BE CONSTRUCTED PRIOR TO COMPLETION OF THE BRIDGE DECK.

FOR REINFORCED BRIDGE APPROACH FILL FABRIC WALL INCLUDING GEOTEXTILE, IMPERMEABLE GEOMEMBRANE, 4'' Ø DRAINAGE PIPE, #78M STONE, WELDED WIRE FORM, AND SELECT MATERIAL, SEE ROADWAY PLANS.

AREA BETWEEN THE WINGWALL AND APPROACH SLAB SHALL BE GRADED TO DRAIN THE WATER AWAY FROM THE FILL FACE OF THE BRIDGE AND SHALL BE PAVED. SEE ROADWAY PLANS.

THE JOINT OPENING AT THE APPROACH SLAB/DECK INTERFACE SHALL BE SAWED NO MORE THAN 12 HOURS AFTER THE APPROACH SLAB IS CAST. THE JOINT SHALL BE CLEANED OF ALL DEBRIS BEFORE THE SEALANT IS APPLIED. THE JOINT SEALER MATERIAL SHALL CONFORM TO THE REQUIREMENTS OF SECTION 1028-3 OF THE STANDARD SPECIFICATIONS.

NOTE: SPLICE LENGTHS SHOWN FROM #4 A1 AND #4 A2 BARS ARE IDENTICAL FOR ALL CORRESPONDING BARS IN BOTH APPROACH SLABS.

BILL OF MATERIAL

FOR ONE APPROACH SLAB (2 REQ'D)

BAR	NO.	SIZE	TYPE	LENGTH	WEIGHT
* A1	32	#4	STR.	24'-10"	531
A2	32	#4	STR.	24'-8"	527
* B1	88	#5	STR.	14'-1"	1293
B2	88	#6	STR.	14'-7"	1928
* B3	2	#5	STR.	13'-9"	29
B4	2	#6	STR.	13'-9"	41
REINFORCING STEEL				2496	LBS.
* EPOXY COATED REINFORCING STEEL				1853	LBS.
CLASS AA CONCRETE				29.2	C. Y.

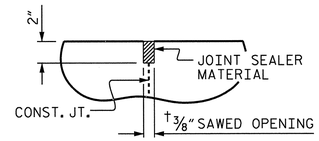

DETAIL ''A''

REINFORCING BAR SPLICE

MARK NO.	SPLICE LENGTH
#4 A1	2'-0"
#4 A2	1'-9"

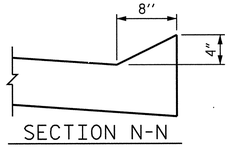

SECTION N-N

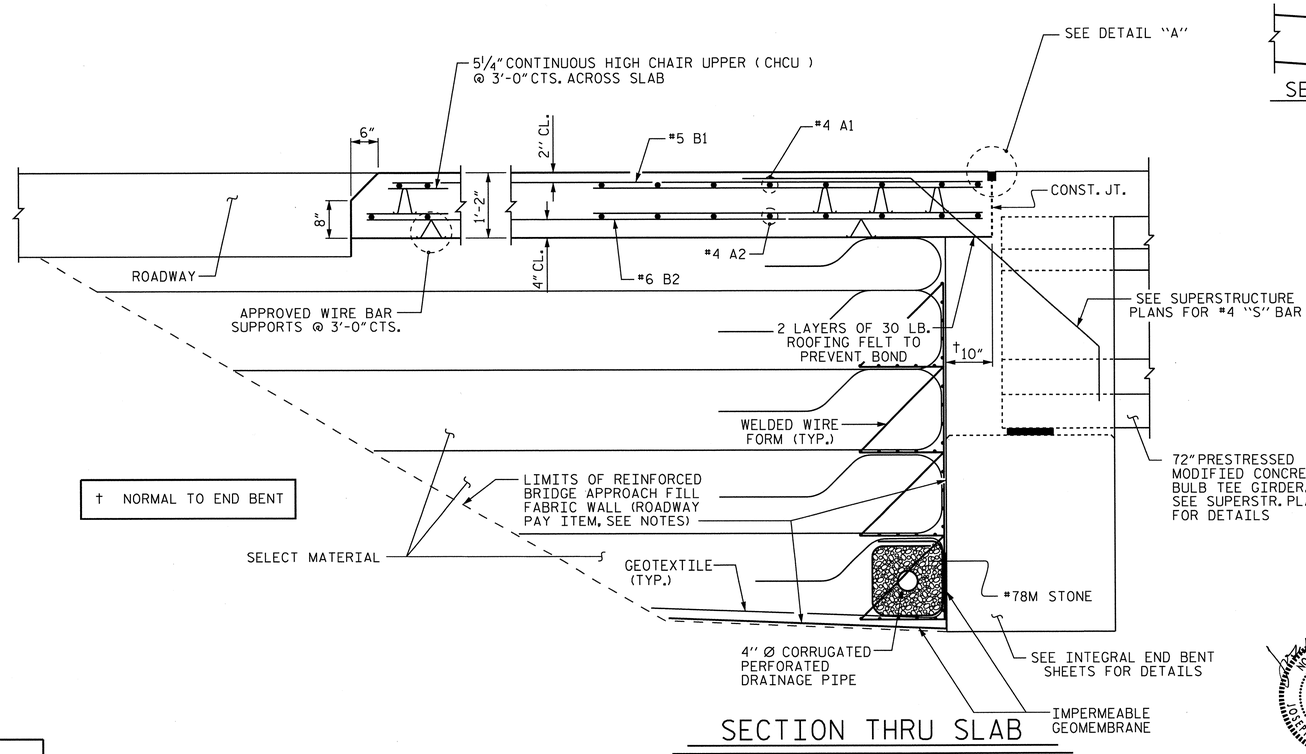

SECTION THRU SLAB

PROJECT NO. U-2524C

GUILFORD COUNTY

STATION: 274+26.98 -L-

SHEET 1 OF 2

STATE OF NORTH CAROLINA
DEPARTMENT OF TRANSPORTATION
RALEIGH
STANDARD

BRIDGE APPROACH SLAB FOR INTEGRAL ABUTMENT

REVISIONS						SHEET NO.
NO.	BY:	DATE:	NO.	BY:	DATE:	S-534
1			3			TOTAL SHEETS
2			4			834

STD. NO. BAS5 (SHT 1b)

Stantec Consulting Services Inc.
801 Jones Franklin Road
Suite 300
Raleigh, NC 27606
Tel. (919) 851-6866
Fax. (919) 851-7024
www.stantec.com
License No. F-0672

ASSEMBLED BY : C. B. BAKER	DATE : 06-15-12	
CHECKED BY : J. T. KELVINGTON	DATE : 06-15-12	
DRAWN BY : TLA 10/05	ADDED 5/1/06RR KMM/GM	DESIGN ENGINEER OF RECORD: J. T. KELVINGTON DATE : 03-28-13
CHECKED BY : GM 5/06	REV. 10/1/11 MAA/GM	
	REV. 12/21/11 MAA/GM	

SEAL 13406 ENGINEER JOSEPH T. KELVINGTON NORTH CAROLINA PROFESSIONAL 3/1/13

U:\Structures\Y Fleming Rd\Drawing\Final\U-2524C_SD_AS.dgn 6/7/2013 2:26:50 PM jgelle STRUCTURES PEN TABLE.tbl Raleigh PDF Creator (Full).plt

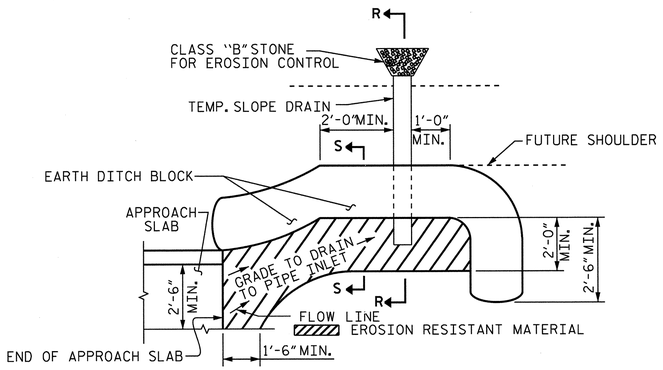

NOTE: IMMEDIATELY AFTER THE CONSTRUCTION OF THE APPROACH SLAB, THE CONTRACTOR SHALL PROVIDE TEMPORARY BERM AND SLOPE DRAIN. CONTRACTOR SHALL GRADE TO PIPE INLET AND PROVIDE EROSION RESISTANT MATERIAL AS SHOWN. THE EROSION RESISTANT MATERIAL SHALL BE EITHER 1) ASPHALT PLANT MIX, TYPE 1 OR TYPE 2, MIN. 2" DEPTH, 2) EROSION CONTROL MAT, OR 3) CONCRETE, AS DIRECTED BY THE ENGINEER. THE SLOPE DRAIN SHALL CONSIST OF A NON-PERFORATED TEMPORARY DRAINAGE PIPE, 12 INCHES IN DIAMETER.

PLAN VIEW

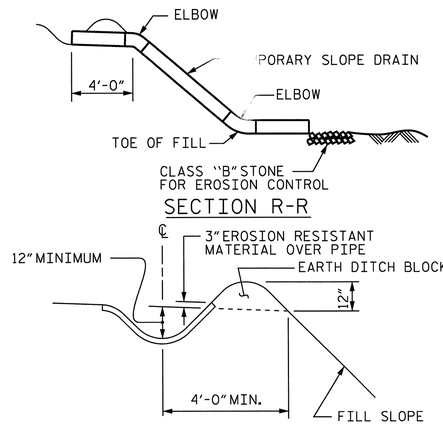

SECTION S-S

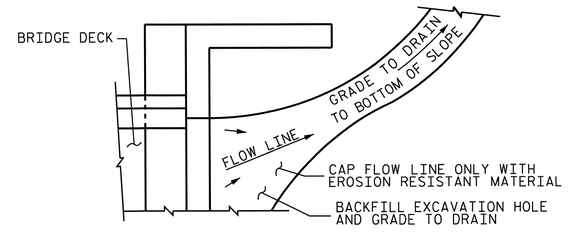

NOTE: IF THE APPROACH SLAB IS NOT CONSTRUCTED IMMEDIATELY AFTER THE BACKFILLING OF THE END BENT EXCAVATION, GRADE TO DRAIN TO THE BOTTOM OF THE SLOPE AND PROVIDE EROSION RESISTANT MATERIAL, SUCH AS FIBERGLASS ROVING OR AS DIRECTED BY THE ENGINEER TO PREVENT SOIL EROSION AND TO PROTECT THE AREA ADJACENT TO THE STRUCTURE. THE CONTRACTOR WILL BE REQUIRED TO REMOVE THESE MATERIALS PRIOR TO CONSTRUCTION OF THE APPROACH SLAB.

TEMPORARY DRAINAGE DETAIL

TEMPORARY BERM AND SLOPE DRAIN DETAILS

(TO BE USED WHEN SHOULDER BERM GUTTER IS REQUIRED)

PROJECT NO. U-2524C

GUILFORD COUNTY

STATION: 274+26.98 -L-

SHEET 2 OF 2

STATE OF NORTH CAROLINA
DEPARTMENT OF TRANSPORTATION
RALEIGH

STANDARD

BRIDGE APPROACH SLAB DETAILS

REVISIONS						SHEET NO.
NO.	BY:	DATE:	NO.	BY:	DATE:	S-535
1			3			TOTAL SHEETS
2			4			836

STD. NO. BAS4

Stantec
Stantec Consulting Services Inc.
801 Jones Franklin Road
Suite 300
Raleigh, NC 27606
Tel. (919) 851-6866
Fax. (919) 851-7024
www.stantec.com
License No. F-0672

ASSEMBLED BY : C. B. BAKER	DATE : 6/12		
CHECKED BY : J. T. KELVINGTON	DATE : 6/12		
DRAWN BY : FCJ 11/88	REV. 5/7/03 RWW/JTE	DESIGN ENGINEER OF RECORD: J. T. KELVINGTON	DATE : 03-28-13
CHECKED BY : ARB 11/88	REV. 5/1/06RRR MAA/KMM		
	REV. 10/1/11 MAA/GM		

NORTH CAROLINA PROFESSIONAL SEAL 13406 ENGINEER JOSEPH T. KELVINGTON

U:\Structures\Y Fleming Rd\Drawing\Final\U-2524C_SD_AS_2.dgn 6/7/2013 2:26:54 PM Jgelle STRUCTURES PEN TABLE.tbl Raleigh PDF Creator (Full).plt

F.A. PROJECT NO. NHF-0708(62)

SECTION ALONG ℄ SURVEY -Y2-

(BENTS ON SECTION AT RIGHT ANGLES TO BENTS)

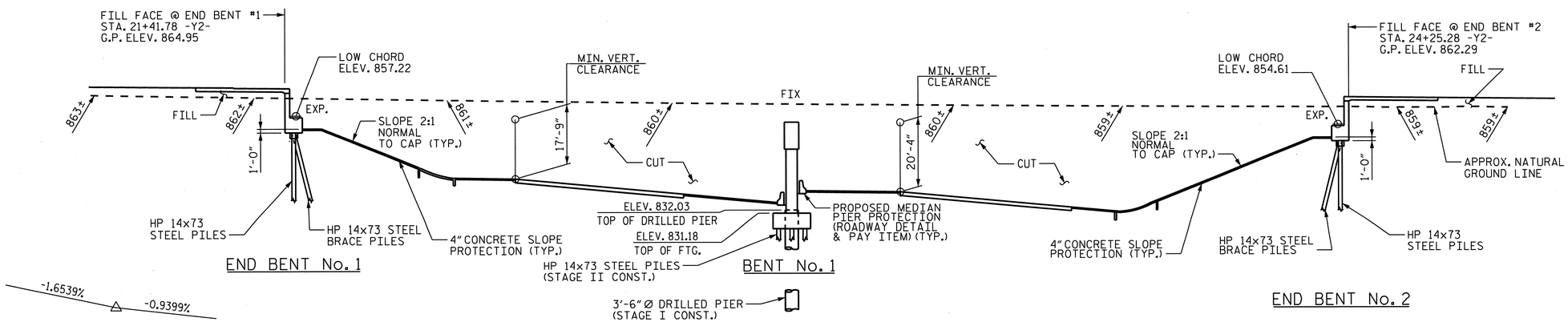

GRADE DATA ℄ SURVEY -Y2-

-1.6539%

-0.9399%

P.I. STA. = 19+50.00 -Y2-
ELEV. = 866.76
V.C. = 180'

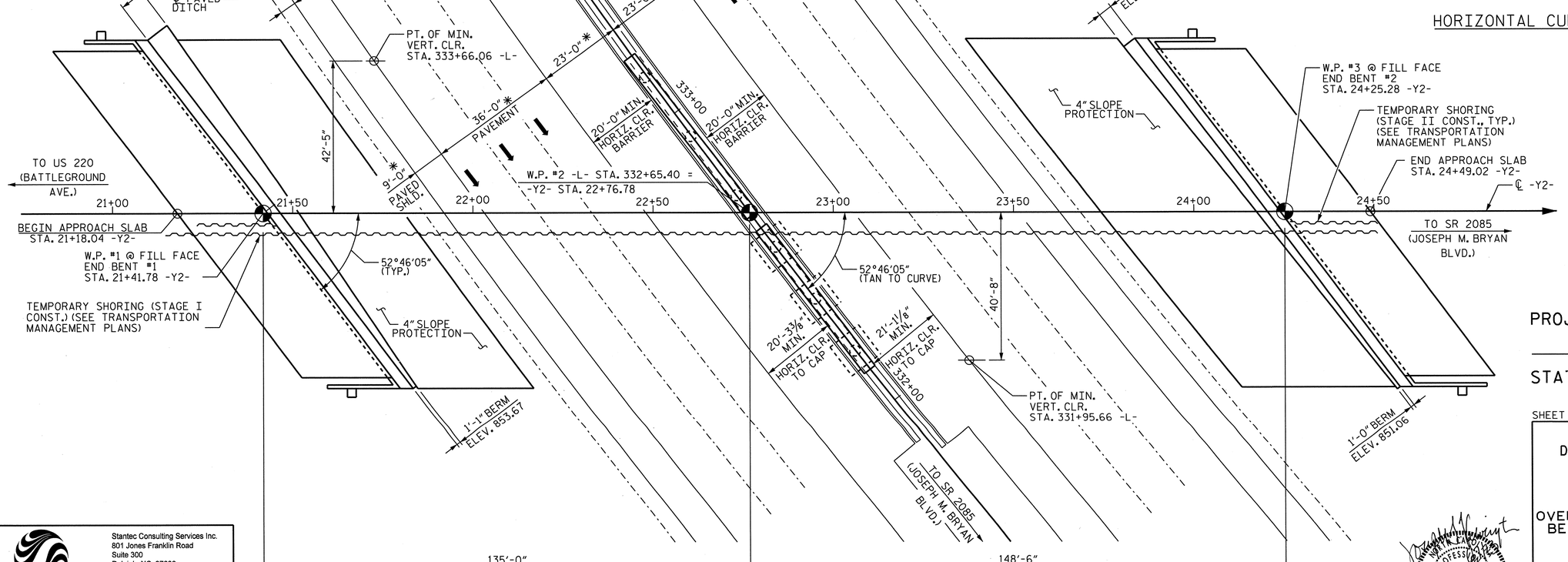

PLAN ALONG -Y2-

PILES NOT SHOWN IN PLAN VIEW

* DENOTES RADIAL DIMENSIONS

PIs STA 332+30.06
~~0~~ s = 8° 35' 39.7"
Ls = 600.00'
LT = 400.47'
ST = 200.43'

PI STA 336+35.69
Δ = 11° 46' 02.8" (RT)
L = 410.76'
T = 206.11'
R = 2,000.00'

HORIZONTAL CURVE DATA -L-

PROJECT NO. U-2524C

GUILFORD COUNTY

STATION: 332+65.40 -L-
22+76.78 -Y2-

SHEET 1 OF 3 BRIDGE NO. 1126

STATE OF NORTH CAROLINA
DEPARTMENT OF TRANSPORTATION
RALEIGH

GENERAL DRAWING

FOR BRIDGE ON SR 2182
OVER GREENSBORO WESTERN LOOP
BETWEEN SR 2085 AND US 220

REVISIONS						SHEET NO.
NO.	BY:	DATE:	NO.	BY:	DATE:	S-536
1			3			TOTAL SHEETS
2			4			836

Stantec Consulting Services Inc.
801 Jones Franklin Road
Suite 300
Raleigh, NC 27606
Tel. (919) 851-6866
Fax. (919) 851-7024
www.stantec.com
License No. F-0672

DRAWN BY : J. L. HENNEKES DATE : 04-11-13
CHECKED BY : J. T. KELVINGTON DATE : 04-11-13

DESIGN ENGINEER OF RECORD: J. T. KELVINGTON DATE : 04-16-13

NORTH CAROLINA PROFESSIONAL SEAL 13406 ENGINEER JOSEPH T. KELVINGTON

U:\Structures\Y2 Horsepen Creek Rd\Drawing\Final\U-2524C_SD_GD.dgn 6/7/2013 2:52:38 PM jgelle

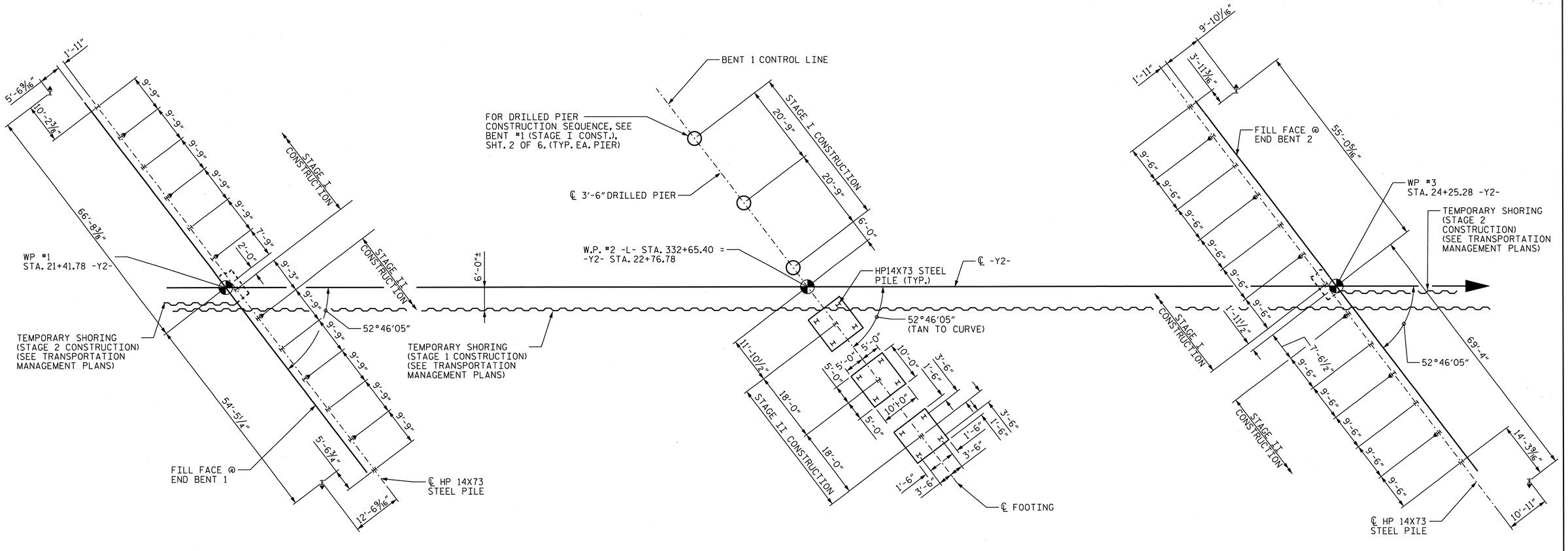

END BENT NO. 1

BENT NO. 1

DIMENSIONS & PILE LAYOUT ARE
TYPICAL FOR EACH FOOTING.

END BENT NO. 2

▲ INDICATES DIRECTION OF BATTER

FOUNDATION LAYOUT PLAN

NOTES:

FOR PILES, SEE SECTION 450 OF THE STANDARD SPECIFICATIONS.

PILES AT END BENT NO. 1 AND END BENT NO. 2 ARE DESIGNED FOR A FACTORED RESISTANCE OF 215 TONS PER PILE.

DRIVE PILES AT END BENT NO. 1 AND END BENT NO. 2 TO A REQUIRED DRIVING RESISTANCE OF 360 TONS.

PILES AT BENT NO. 1 RIGHT SIDE ARE DESIGNED FOR A FACTORED RESISTANCE OF 190 TONS PER PILE.

DRIVE PILES AT BENT NO. 1 RIGHT SIDE TO A REQUIRED DRIVING RESISTANCE OF 320 TONS PER PILE.

STEEL H-PILE POINTS ARE REQUIRED FOR STEEL H-PILES AT BENT NO. 1 RIGHT SIDE. FOR STEEL PILE POINTS, SEE SECTION 450 OF THE STANDARD SPECIFICATIONS.

IS HAS BEEN ESTIMATED THAT A HAMMER WITH AN EQUIVALENT RATED ENERGY IN THE RANGE OF 55,700 FT-LBS TO 75,500 FT-LBS PER BLOW WILL BE REQUIRED TO DRIVE PILES AT END BENT NO. 1 AND END BENT NO. 2. THIS ESTIMATED ENERGY RANGE DOES NOT RELEASE THE CONTRACTOR FROM PROVIDING DRIVING EQUIPMENT IN ACCORDANCE WITH SUBARTICLE 450-3(D)(2) OF THE STANDARD SPECIFICATIONS.

PILE EXCAVATION IS REQUIRED TO INSTALL PILES AT BENT NO. 1 RIGHT SIDE. EXCAVATE HOLES AT PILE LOCATIONS TO ELEVATION 808 FT. FOR PILE EXCAVATION, SEE SECTION 450 OF THE STANDARD SPECIFICATIONS.

FOR DRILLED PIERS, SEE SECTION 411 OF THE STANDARD SPECIFICATIONS.

DRILLED PIERS AT BENT NO. 1 ARE DESIGNED FOR A FACTORED RESISTANCE OF 835 TONS PER PIER. CHECK FIELD CONDITIONS FOR THE REQUIRED TIP RESISTANCE OF 75 TSF.

INSTALL DRILLED PIERS AT BENT NO. 1 TO A TIP ELEVATION NO HIGHER THAN 774.78 FT AND WITH THE REQUIRED TIP RESISTANCE.

DO NOT USE MULTIPLE TEMPORARY STEEL CASINGS IN A TELESCOPED ARRANGEMENT TO STABILIZE DRILLED PIER EXCAVATION AT BENT NO. 1.

DO NOT USE SLURRY CONSTRUCTION FOR DRILLED PIERS AT BENT NO. 1.

SID INSPECTION MAY BE REQUIRED FOR DRILLED PIERS. THE ENGINEER WILL DETERMINE THE NEED FOR SID INSPECTIONS. FOR SID INSPECTIONS, SEE SECTION 411 OF THE STANDARD SPECIFICATIONS.

CSL TUBES ARE REQUIRED AND CSL TESTING MAY BE REQUIRED FOR DRILLED PIERS. THE ENGINEER WILL DETERMINE THE NEED FOR CSL TESTING. FOR CSL TESTING, SEE SECTION 411 OF THE STANDARD SPECIFICATIONS.

TEMPORARY CASING WILL BE REQUIRED TO CONSTRUCT THE COLUMNS AT BENT NO. 1 LEFT SIDE. THE CASING SHALL BE SIZED TO ACCOMMODATE THE COLUMN FORMS. SEE COLUMN EXCAVATION SPECIAL PROVISION.

SECTIONAL TEMPORARY CASINGS ARE REQUIRED FOR DRILLED PIER CONSTRUCTION AT BENT NO. 1.

DIMENSIONS LOCATING PILES ARE SHOWN TO THE CENTERLINE OF THE PILE AT BOTTOM OF END BENT CAP OR FOOTING.

Stantec Consulting Services Inc.
801 Jones Franklin Road
Suite 300
Raleigh, NC 27606
Tel. (919) 851-6866
Fax. (919) 851-7024
www.stantec.com
License No. F-0672

DRAWN BY : J. B. GEILE DATE : 04-11-13
CHECKED BY : S. S. YUEN DATE : 04-11-13

DESIGN ENGINEER OF RECORD: J. T. KELVINGTON DATE : 04-16-13

NORTH CAROLINA PROFESSIONAL ENGINEER SEAL 13406 JOSEPH T. KELVINGTON 4/16/13

PROJECT NO. U-2524C
GUILFORD COUNTY
STATION: 332+65.40 -L-

SHEET 2 OF 3 BRIDGE NO. 1126

STATE OF NORTH CAROLINA
DEPARTMENT OF TRANSPORTATION
RALEIGH

GENERAL DRAWING

FOR BRIDGE ON SR 2182
OVER GREENSBORO WESTERN LOOP
BETWEEN SR 2085 AND US 220

REVISIONS						SHEET NO.
NO.	BY:	DATE:	NO.	BY:	DATE:	S-537
1			3			TOTAL SHEETS
2			4			836

U:\Structures\Y2 Horsepen Creek Rd\Drawing\Final\U-2524C_SD_GD_2.dgn 6/11/2013 11:58:57 AM tennis
STRUCTURES PEN TABLE.tbl Raleigh PDF Creator (Full).plt

B.M.#5 - RR SPIKE IN 18"PINE, 1028' RIGHT OF -L- STA. 91+29, ELEV. 861.44'

FOR EROSION CONTROL MEASURES, SEE EROSION CONTROL PLANS.

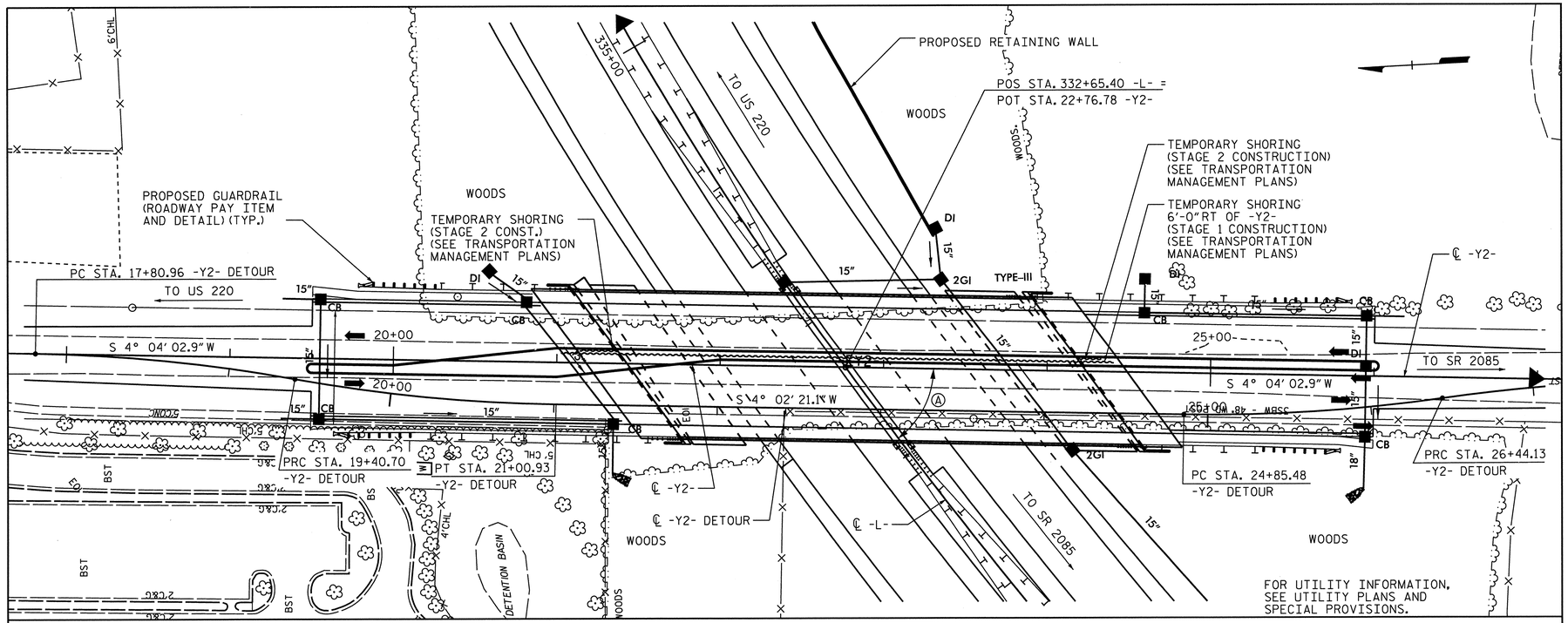

LOCATION SKETCH

NOTES:

ASSUMED LIVE LOAD = HL-93 OR ALTERNATE LOADING.

THIS BRIDGE HAS BEEN DESIGNED IN ACCORDANCE WITH THE REQUIREMENTS OF THE AASHTO LRFD BRIDGE DESIGN SPECIFICATIONS.

THIS BRIDGE IS LOCATED IN SEISMIC PERFORMANCE ZONE 1.

Ⓐ INTERSECTION SKEW = 52°46'05"

FOR OTHER DESIGN DATA AND GENERAL NOTES, SEE SHEET SN.

FOR SUBMITTAL OF WORKING DRAWINGS, SEE SPECIAL PROVISIONS.

FOR FALSEWORK AND FORMWORK, SEE SPECIAL PROVISIONS.

FOR CRANE SAFETY, SEE SPECIAL PROVISIONS.

FOR GROUT FOR STRUCTURES, SEE SPECIAL PROVISIONS.

THE CONTRACTOR SHALL PROVIDE INDEPENDENT ASSURANCE SAMPLES UP TO 400 TONS OF REINFORCING, ONE 30 INCH SAMPLE OF EACH SIZE BAR USED, AND FOR PROJECTS REQUIRING OVER 400 TONS OF REINFORCING STEEL, TWO 30 INCH SAMPLES OF EACH SIZE BAR USED. THE BARS FROM WHICH THE SAMPLES ARE TAKEN MUST THEN BE SPLICED WITH REPLACEMENT BARS OF THE SIZE AND LENGTH OF THE SAMPLE, PLUS A MINIMUM LAP SPLICE OF THIRTY BAR DIAMETERS. PAYMENT FOR THE SAMPLES OF REINFORCING STEEL SHALL BE CONSIDERED INCIDENTAL TO VARIOUS PAY ITEMS.

REMOVABLE FORMS MAY BE USED IN LIEU OF METAL STAY-IN-PLACE FORMS IN ACCORDANCE WITH ARTICLE 420-3 OF THE STANDARD SPECIFICATIONS.

NEEDLE BEAMS WILL NOT BE ALLOWED UNLESS OTHERWISE CALLED FOR ON THE PLANS OR APPROVED BY THE ENGINEER.

ALL STRUCTURAL STEEL SHALL BE AASHTO M270 GRADE 50W AND PAINTED IN ACCORDANCE WITH SYSTEM 4 OF ARTICLE 442-8 OF THE STANDARD SPECIFICATIONS UNLESS OTHERWISE NOTED ON THE PLANS.

THE CLASS AA CONCRETE IN THE BRIDGE DECK SHALL CONTAIN FLY ASH OR GROUND GRANULATED BLAST FURNACE SLAG AT THE SUBSTITUTION RATE SPECIFIED IN ARTICLE 1024-1 AND IN ACCORDANCE WITH ARTICLES 1024-5 AND 1024-6 OF THE STANDARD SPECIFICATIONS. NO PAYMENT WILL BE MADE FOR THIS SUBSTITUTION AS IT IS CONSIDERED INCIDENTAL TO THE COST OF THE REINFORCED CONCRETE DECK SLAB.

WORK SHALL NOT BE STARTED ON STAGE II CONSTRUCTION PORTIONS OF BRIDGE UNTIL ROADWAY SECTION HAS BEEN EXCAVATED.

FOR LIMITS OF TEMPORARY SHORING FOR MAINTENANCE OF TRAFFIC, SEE TRANSPORTATION MANAGEMENT PLANS. FOR PAY ITEM FOR TEMPORARY SHORING FOR MAINTENANCE OF TRAFFIC, SEE ROADWAY PLANS.

FOR PLACING LOAD ON STRUCTURAL MEMBERS SEE SPECIAL PROVISIONS.

FOR COLUMN EXCAVATION, SEE SPECIAL PROVISIONS.

TOTAL BILL OF MATERIAL

	FOUNDATION EXCAVATION	PILE EXCAVATION IN SOIL	PILE EXCAVATION NOT IN SOIL	3'-6"DIA DRILLED PIERS IN SOIL	3'-6"DIA DRILLED PIERS NOT IN SOIL	SID INSPECTIONS	CSL TESTING	REINFORCED CONCRETE DECK SLAB	GROOVING BRIDGE FLOORS	CLASS A CONCRETE	BRIDGE APPROACH SLABS	REINFORCING STEEL	SPIRAL COLUMN REINFORCING STEEL	STRUCTURAL STEEL	HP14X73 STEEL PILES		STEEL PILE POINTS
	LUMP SUM	LIN.FT.	LIN.FT.	LIN.FT.	LIN.FT.	EACH	EACH	SQ.FT.	SQ.FT.	CU.YDS.	LUMP SUM	LBS.	LBS.	APPROX. LBS.	NO.	LIN.FT.	EACH
SUPERSTRUCTURE								25,434	23,212		LUMP SUM			893,900			
END BENT NO.1										124.5		19,974			15	710.00	
BENT NO.1	LUMP SUM	120	150	137.8	34.0	1	1			308.4		47,087	9,536		15	300.00	15
END BENT NO.2										126.4		19,745			15	750.00	
TOTAL	LUMP SUM	120	150	137.8	34.0	1	1	25,434	23,212	559.3	LUMP SUM	86,806	9,536	893,900	45	1,760.00	15

⚠

TOTAL BILL OF MATERIAL

	TWO BAR METAL RAIL	1'-2" X 2'-6" CONCRETE PARAPET	4" SLOPE PROTECTION	POT BEARINGS	ELASTOMERIC BEARINGS	FOAM JOINT SEALS	COLUMN EXCAVATION
	LIN.FT.	LIN.FT.	SQ.YDS.	LUMP SUM	LUMP SUM	LUMP SUM	LIN. FT.
SUPERSTRUCTURE	544.8	561.56		LUMP SUM	LUMP SUM	LUMP SUM	
END BENT NO.1			482				
BENT NO.1							48.8
END BENT NO.2			643				
TOTAL	544.8	561.56	1,125	LUMP SUM	LUMP SUM	LUMP SUM	48.8

PROJECT NO. U-2524C

GUILFORD COUNTY

STATION: 332+65.40 -L-

SHEET 3 OF 3 BRIDGE NO. 1126

STATE OF NORTH CAROLINA
DEPARTMENT OF TRANSPORTATION
RALEIGH

GENERAL DRAWING

FOR BRIDGE ON SR 2182 OVER GREENSBORO WESTERN LOOP BETWEEN SR 2085 AND US 220

REVISIONS						SHEET NO.
NO.	BY:	DATE:	NO.	BY:	DATE:	S-538
1	JTK/JLH	09/03/2013	3			TOTAL SHEETS
2			4			835

Stantec
Stantec Consulting Services Inc.
801 Jones Franklin Road
Suite 300
Raleigh, NC 27606
Tel. (919) 851-6866
Fax. (919) 851-7024
www.stantec.com
License No. F-0672

DRAWN BY : J. B. GEILE DATE : 04-11-13
CHECKED BY : T. R. DUDECK DATE : 04-11-13

DESIGN ENGINEER OF RECORD: J. T. KELVINGTON DATE : 04-16-13

NORTH CAROLINA PROFESSIONAL SEAL 13406 ENGINEER JOSEPH TYLER KELVINGTON 3/13

U:\Structures\Y2 Horsepen Creek Rd\Drawing\Final\U-2524C_SD_GD_3.dgn 9/3/2013 1:35:11 PM JhennekesSTRUCTURES PEN TABLE.tbl Raleigh PDF Creator (Full).plt

LOAD AND RESISTANCE FACTOR RATING (LRFR) SUMMARY FOR STEEL GIRDERS

LEVEL		VEHICLE	WEIGHT (W) (TONS)	CONTROLLING LOAD RATING	MINIMUM RATING FACTORS (RF)	TONS = W X RF	STRENGTH I LIMIT STATE											SERVICE II LIMIT STATE							COMMENT NUMBER
								MOMENT					SHEAR						MOMENT						
							LIVE LOAD FACTORS (γ_{LL})	DISTRIBUTION FACTOR (DF)	RATING FACTOR	SPAN	GIRDER LOCATION	DISTANCE FROM LEFT END OF SPAN (ft)	DISTRIBUTION FACTOR (DF)	RATING FACTOR	SPAN	GIRDER LOCATION	DISTANCE FROM LEFT END OF SPAN (ft)	LIVE LOAD FACTORS (γ_{LL})	DISTRIBUTION FACTOR (DF)	RATING FACTOR	SPAN	GIRDER LOCATION	DISTANCE FROM LEFT END OF SPAN (ft)	
DESIGN LOAD RATING		HL-93 (INVENTORY)	N/A	⟨1⟩	1.00	--	1.75	0.90	1.00	1	3	132.07	0.77	1.34	1	3	98.07	1.30	0.68	1.59	2	3	108.29	
		HL-93 (OPERATING)	N/A		1.30	--	1.35	0.90	1.30	1	3	132.07	0.77	1.74	1	3	98.07	1.00	0.68	2.06	2	3	108.29	
		HS-20 (INVENTORY)	36.00	⟨2⟩	2.03	36	1.75	0.83	2.38	1	3	120.07	0.72	2.03	1	3	98.07	1.30	0.66	2.41	2	3	108.29	
		HS-20 (OPERATING)	36.00		2.42	36	1.35	0.83	3.08	1	3	120.07	0.72	2.42	1	3	98.07	1.00	0.66	3.14	2	3	108.29	
LEGAL LOAD RATING	SINCE VEHICLE (SV)	SNSH	13.500		5.61	13.5	1.40	0.69	7.15	2	3	108.29	0.75	6.17	1	3	98.07	1.30	0.69	5.61	2	3	108.29	
		SNGARBS2	20.000		4.08	20	1.40	0.67	5.20	2	3	108.29	0.72	4.38	1	3	98.07	1.30	0.67	4.08	2	3	108.29	
		SNAGRIS2	22.000		3.82	22	1.40	0.83	4.82	1	3	120.07	0.73	4.01	1	3	98.07	1.30	0.66	3.82	2	3	108.29	
		SNCOTTS3	27.250		2.81	27.25	1.40	0.69	3.59	2	3	108.29	0.79	2.90	1	3	98.07	1.30	0.69	2.81	2	3	108.29	
		SNAGGRS4	34.925		2.32	34.925	1.40	0.68	2.95	2	3	108.29	0.76	2.39	1	3	98.07	1.30	0.68	2.32	2	3	108.29	
		SNS5A	35.550		2.29	35.55	1.40	0.67	2.91	2	3	108.29	0.76	2.42	1	3	98.07	1.30	0.67	2.29	2	3	108.29	
		SNS6A	39.950		2.09	39.95	1.40	0.82	2.67	1	3	120.07	0.75	2.20	1	3	98.07	1.30	0.67	2.09	2	3	108.29	
		SNS7B	42.000		2.01	42	1.40	0.81	2.54	1	3	120.07	0.69	2.29	1	3	98.07	1.30	0.67	2.01	2	3	108.29	
	TRUCK TRACTOR SEMI-TRAILER (TTST)	TNAGRIT3	33.000		2.56	33	1.40	0.88	3.24	1	3	120.07	0.73	2.69	1	3	98.07	1.30	0.68	2.56	2	3	108.29	
		TNT4A	33.075		2.52	33.075	1.40	0.67	3.21	2	3	108.29	0.77	2.56	1	3	98.07	1.30	0.67	2.52	2	3	108.29	
		TNT6A	41.600		2.09	41.6	1.40	0.85	2.58	1	3	120.07	0.80	2.23	1	3	98.07	1.30	0.66	2.09	2	3	108.29	
		TNT7A	42.000		2.09	42	1.40	0.85	2.58	1	3	120.07	0.80	2.23	1	3	98.07	1.30	0.66	2.09	2	3	108.29	
		TNT7B	42.000		2.07	42	1.40	0.85	2.57	1	3	120.07	0.81	2.11	1	3	98.07	1.30	0.66	2.07	2	3	108.29	
		TNAGRIT4	43.000		1.97	43	1.40	0.81	2.49	1	3	120.07	0.85	1.97	1	3	98.07	1.30	0.66	2.02	2	3	108.29	
		TNAGT5A	45.000		1.93	45	1.40	0.85	2.39	1	3	120.07	0.78	2.08	1	3	98.07	1.30	0.67	1.93	2	3	108.29	
		TNAGT5B	45.000	⟨3⟩	1.93	45	1.40	0.82	2.38	1	3	120.07	0.82	1.95	1	3	98.07	1.30	0.66	1.93	2	3	108.29	
FATIGUE		HL-93 (INVENTORY)	γ_{LL}=0.75		1.67																			

LOAD FACTORS:

DESIGN LOAD RATING FACTORS	LIMIT STATE	γ_{DC}	γ_{DW}
	STRENGTH I	1.25	1.50
	SERVICE II	1.00	1.00

NOTES:

MINIMUM RATING FACTORS ARE BASED ON THE STRENGTH I AND SERVICE II LIMIT STATES.

ALLOWABLE STRESS FOR SERVICE II LIMIT STATE ARE AS REQUIRED FOR DESIGN.

COMMENTS:

1. LOAD RATING FACTORS FOR HL-93 (INV) AND (HL-93 OP) INCLUDE PEDESTRIAN LIVE LOAD.

⟨#⟩ CONTROLLING LOAD RATING

⟨1⟩ DESIGN LOAD RATING (HL-93) **

⟨2⟩ DESIGN LOAD RATING (HS-20) **

⟨3⟩ LEGAL LOAD RATING **

** SEE CHART FOR VEHICLE TYPE

GIRDER LOCATION

I - INTERIOR GIRDER
EL - EXTERIOR LEFT GIRDER
ER - EXTERIOR RIGHT GIRDER

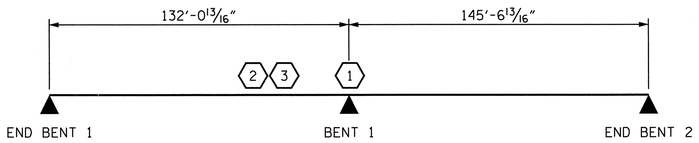

LRFR SUMMARY

PROJECT NO. U-2524C

GUILFORD COUNTY

STATION: 332+65.40 -L-

STATE OF NORTH CAROLINA
DEPARTMENT OF TRANSPORTATION
RALEIGH

LRFR SUMMARY

REVISIONS					
NO.	BY:	DATE:	NO.	BY:	DATE:
1			3		
2			4		

SHEET NO. S-539
TOTAL SHEETS 836

Stantec
Stantec Consulting Services Inc.
801 Jones Franklin Road
Suite 300
Raleigh, NC 27606
Tel. (919) 851-6866
Fax. (919) 851-7024
www.stantec.com
License No. F-0672

ASSEMBLED BY : JLH DATE : 04/13
CHECKED BY : TRD DATE : 04/13
DRAWN BY : MAA 1/08
CHECKED BY : GM/DI 2/08
REV. 11/12/08RR MAA/GM
REV. 10/1/11 MAA/GM
DESIGN ENGINEER OF RECORD: J. T. KELVINGTON DATE : 04-16-13

NORTH CAROLINA PROFESSIONAL ENGINEER SEAL 13406 JOSEPH T. KELVINGTON

U:\Structures\Y2 Horsepen Creek Rd\Drawing\Final\U-2524C_SD_LRFR.dgn 6/7/2013 2:52:45 PM jgeile STRUCTURES PEN TABLE.tbl Raleigh PDF Creator (Full).plt

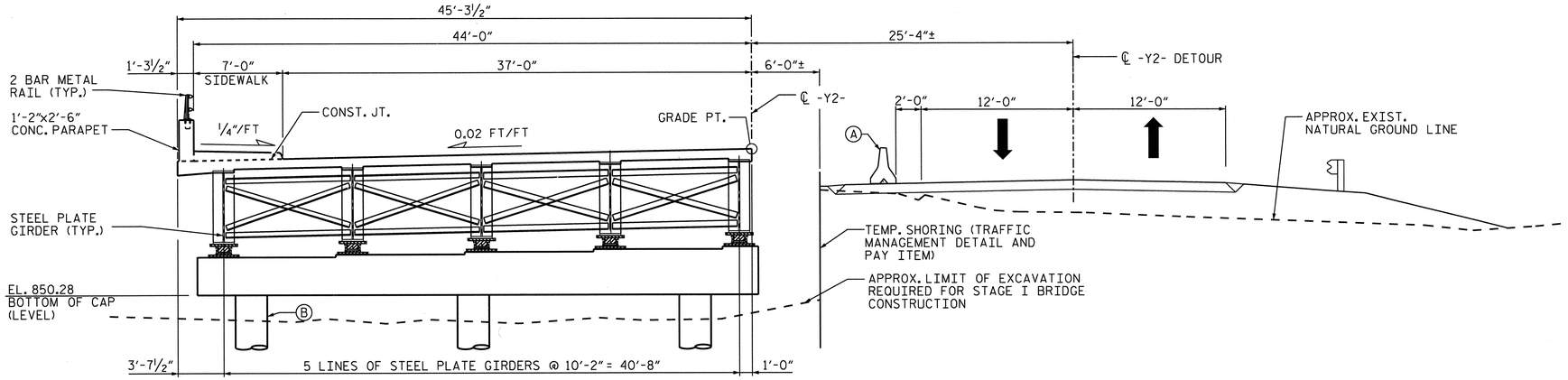

STAGE I CONSTRUCTION

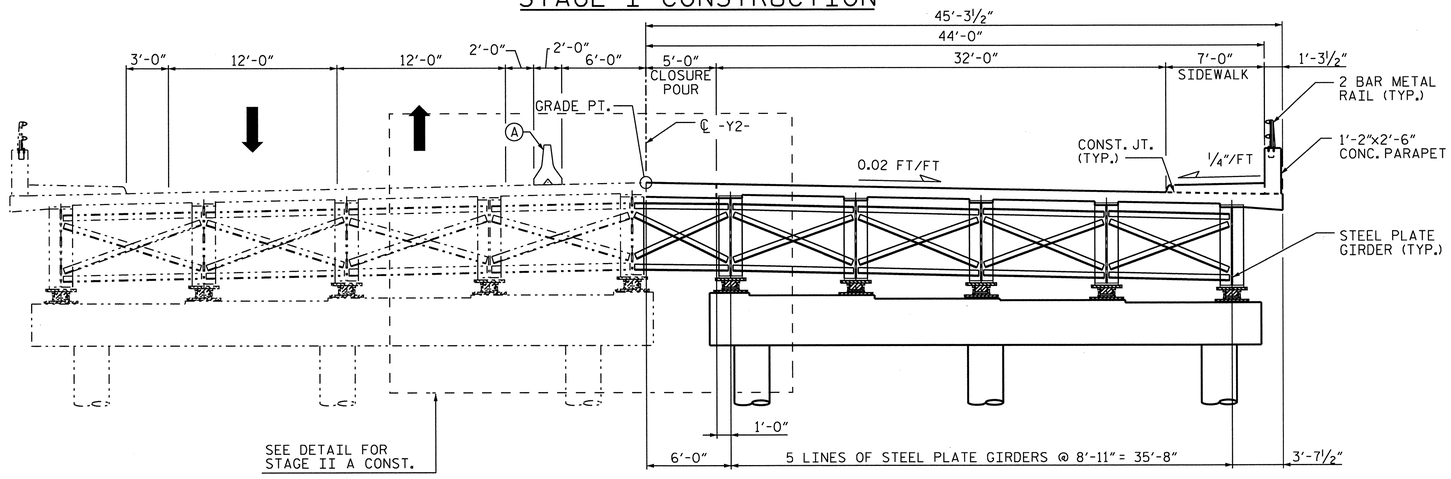

STAGE II CONSTRUCTION

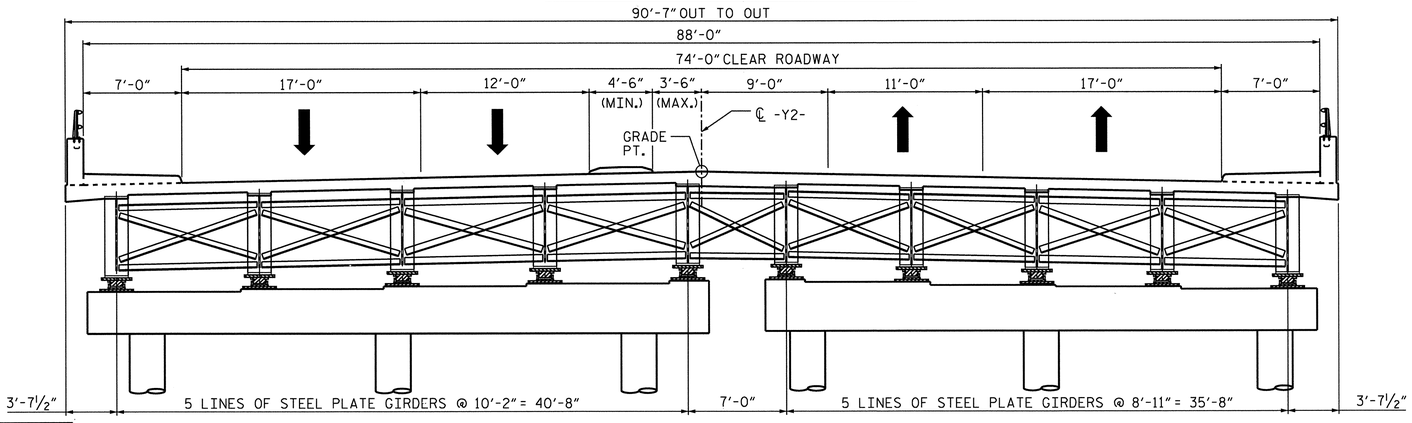

FINISHED TYPICAL SECTION

NOTES:

Ⓐ PORTABLE CONCRETE BARRIER (TRAFFIC MANAGEMENT DETAIL AND PAY ITEM)

Ⓑ CAST-IN-PLACE BENT COLUMNS FORMED AND POURED WITHIN DRILLED PIER EXCAVATIONS. COLUMN FORMS TO CONTAIN CLASS A CONCRETE FROM TOP OF DRILLED PIER TO BOTTOM OF BENT CAP.

SEE SPECIAL PROVISIONS FOR COLUMN EXCAVATION.

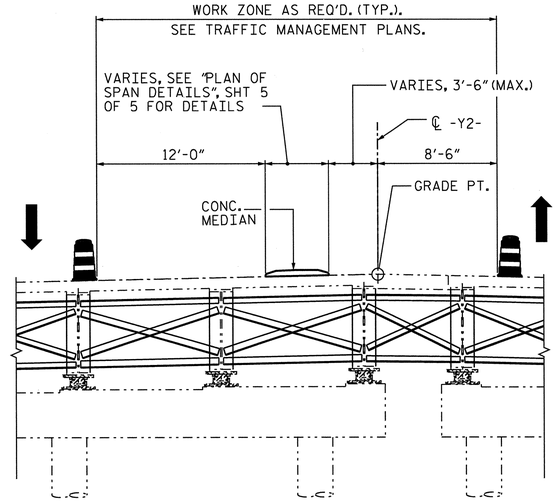

STAGE II A CONSTRUCTION

NOTE: CONCRETE MEDIAN TO BE CONSTRUCTED AFTER ALL WORK IN STAGE II CONSTRUCTION IS COMPLETED.

PROJECT NO. U-2524C

GUILFORD COUNTY

STATION: 332+65.40 -L-

STATE OF NORTH CAROLINA
DEPARTMENT OF TRANSPORTATION
RALEIGH

TYPICAL SECTION
CONSTRUCTION STAGING

REVISIONS						SHEET NO.
NO.	BY:	DATE:	NO.	BY:	DATE:	S-540
1			3			TOTAL SHEETS
2			4			83

Stantec Consulting Services Inc.
801 Jones Franklin Road
Suite 300
Raleigh, NC 27606
Tel. (919) 851-6866
Fax. (919) 851-7024
www.stantec.com
License No. F-0672

DRAWN BY : J. B. GEILE DATE : 9/12
CHECKED BY : J. T. KELVINGTON DATE : 9/12

DESIGN ENGINEER OF RECORD: J. T. KELVINGTON DATE : 04-16-13

NORTH CAROLINA PROFESSIONAL SEAL 13406 ENGINEER JOSEPH T. KELVINGTON 12/13

U:\Structures\Y2 Horsepen Creek Rd\Drawing\Final\U-2524C_SD_TS_4.dgn 6/12/2013 10:07:51 PM jhennekes

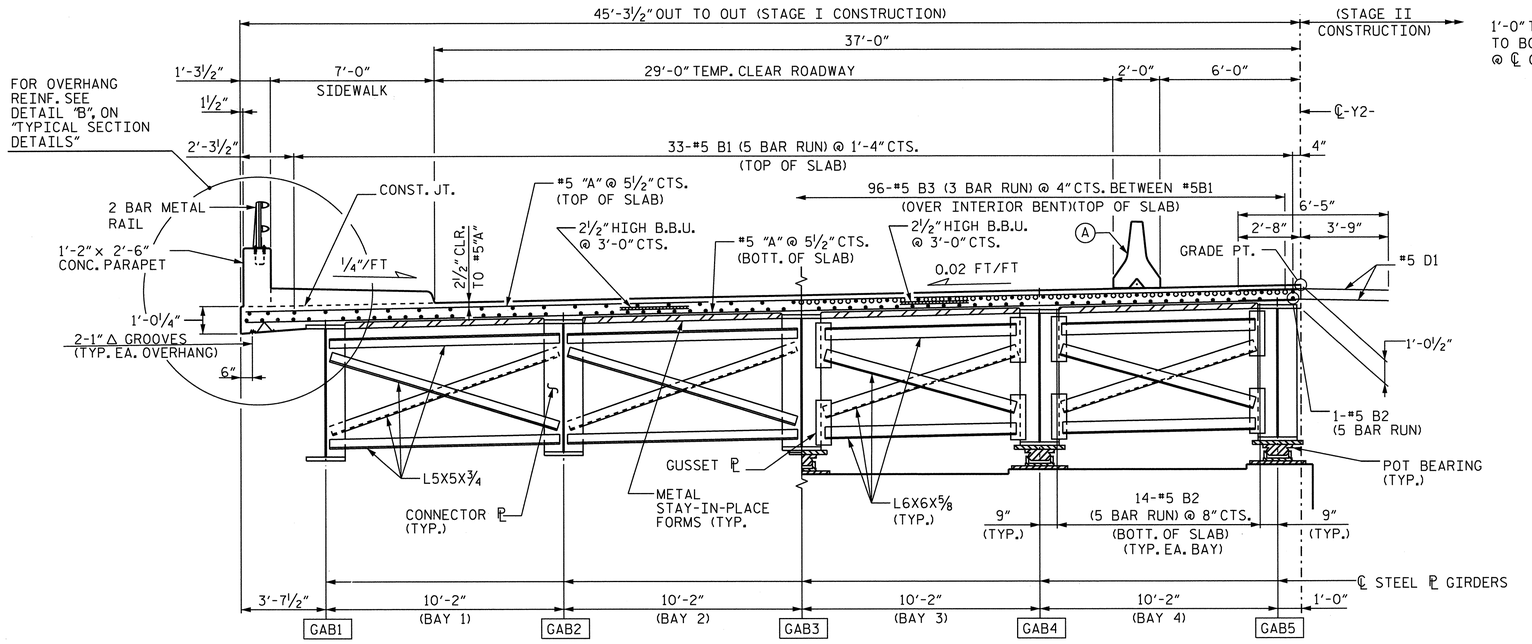

TYPICAL HALF-SECTION AT INTERMEDIATE DIAPHRAGMS

(DIAPHRAGM D1)

TYPICAL HALF-SECTION AT BENT 1

(DIAPHRAGM D3)

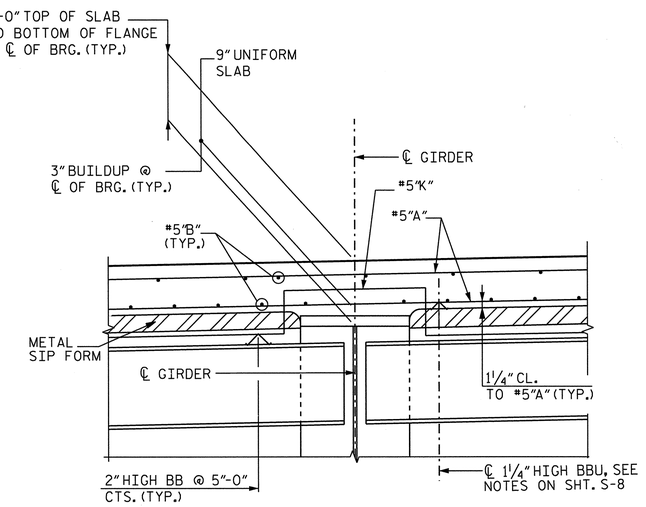

DETAIL "A"

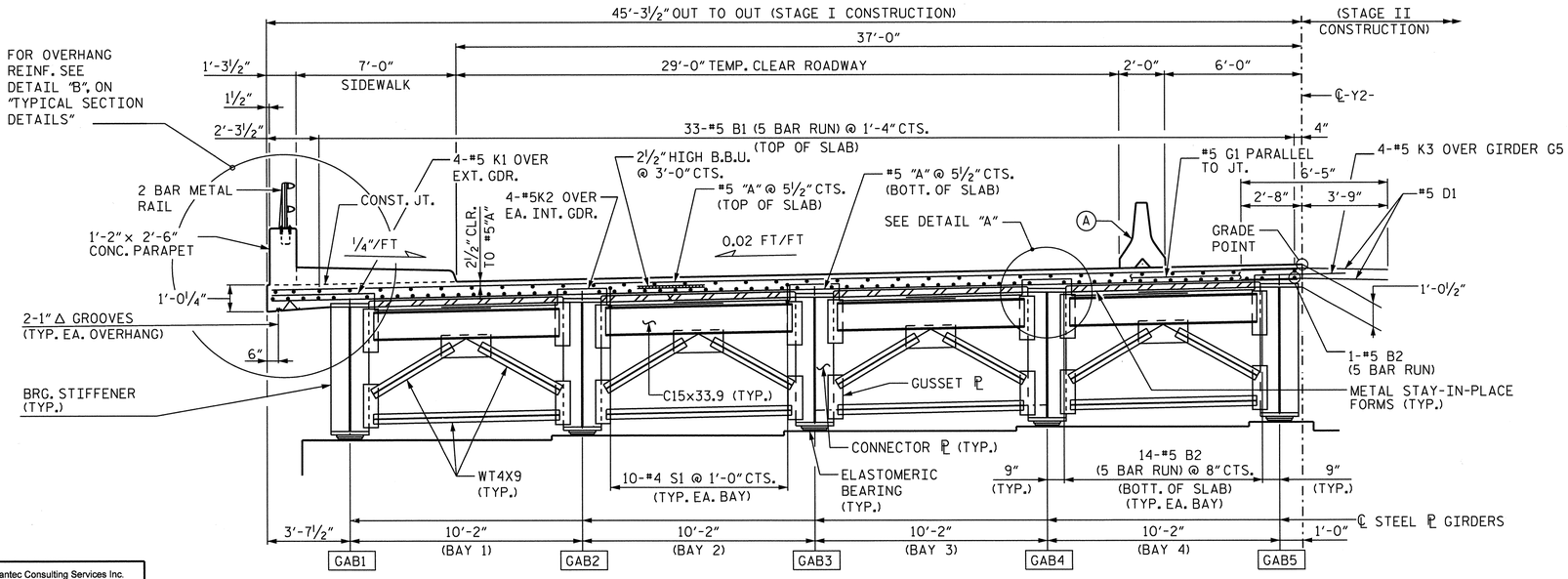

TYPICAL SECTION AT END BENTS

(DIAPHRAGM D5)

NOTES

- ● DENOTES CONTINUOUS LONGITUDINAL DECK REINFORCEMENT.
- ○ DENOTES NON-CONTINUOUS LONGITUDINAL DECK REINFORCEMENT.

SEE SHEET 3 OF 3 FOR ADDITIONAL DETAILS AND NOTES.

FOR CONCRETE PARAPET DETAILS, SEE "CONCRETE PARAPET" SHEET.

FOR 2 BAR METAL RAIL DETAILS, SEE "2 BAR METAL RAIL" SHEET.

(A) DENOTES PORTABLE CONCRETE BARRIER (TRAFFIC MANAGEMENT DETAIL AND PAY ITEM).

FOR SIDEWALK DETAILS, SEE "PLAN OF SPANS" SHEET 4 OF 5.

PROJECT NO. U-2524C

GUILFORD COUNTY

STATION: 332+65.40 -L-

SHEET 1 OF 3

STATE OF NORTH CAROLINA
DEPARTMENT OF TRANSPORTATION
RALEIGH

SUPERSTRUCTURE

TYPICAL SECTION
STAGE I CONSTRUCTION

REVISIONS						SHEET NO.
NO.	BY:	DATE:	NO.	BY:	DATE:	S-541
1			3			TOTAL SHEETS
2			4			836

Stantec
Stantec Consulting Services Inc.
801 Jones Franklin Road
Suite 300
Raleigh, NC 27606
Tel. (919) 851-6866
Fax. (919) 851-7024
www.stantec.com
License No. F-0672

DRAWN BY : C. B. BAKER DATE : 9/12
CHECKED BY : J. T. KELVINGTON DATE : 9/12

DESIGN ENGINEER OF RECORD: J. T. KELVINGTON DATE : 04-16-13

NORTH CAROLINA PROFESSIONAL SEAL 13406 ENGINEER JOSEPH T. KELVINGTON

U:\Structures\Y2 Horsepen Creek Rd\Drawing\Fing\U-2524C_SD_TS.dgn 6/7/2013 2:52:56 PM jgelle

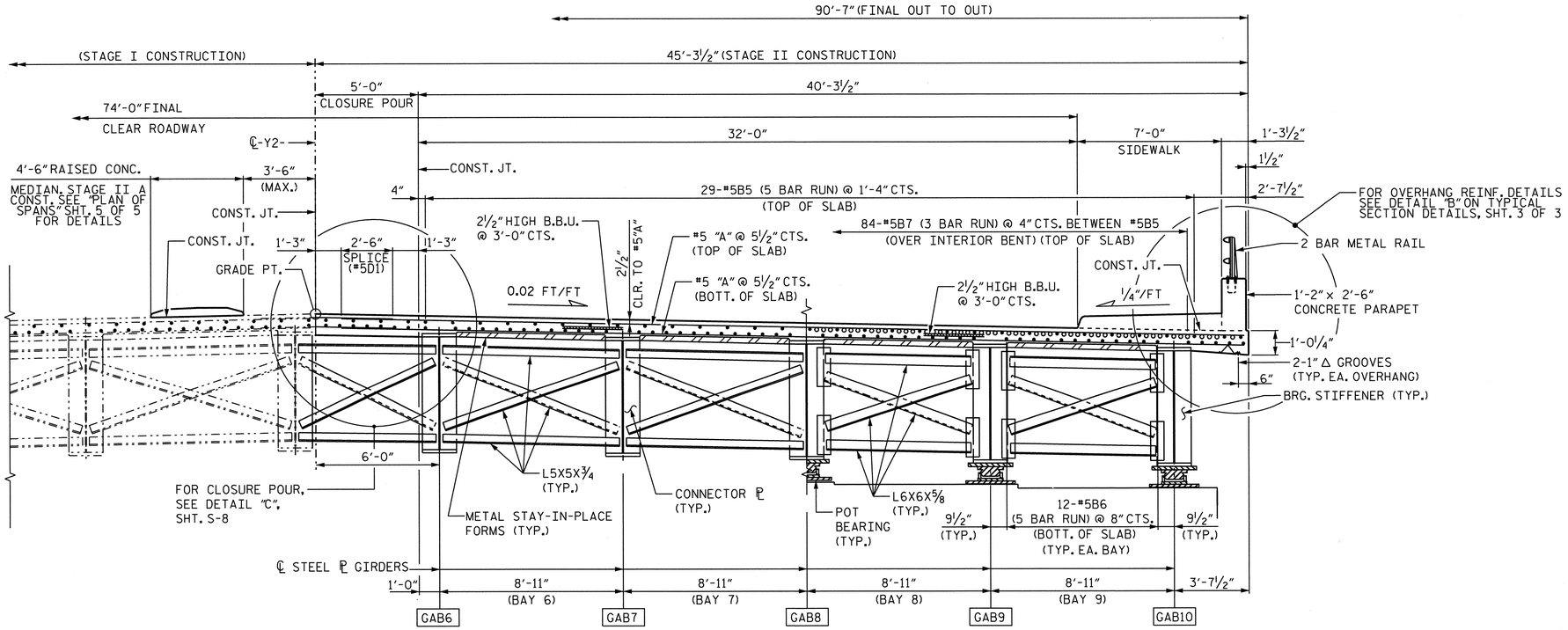

TYPICAL HALF SECTION AT INTERMEDIATE DIAPHRAGMS

(DIAPHRAGM D2, D9)

TYPICAL HALF SECTION AT BENT 1

(DIAPHRAGM D4, D8)

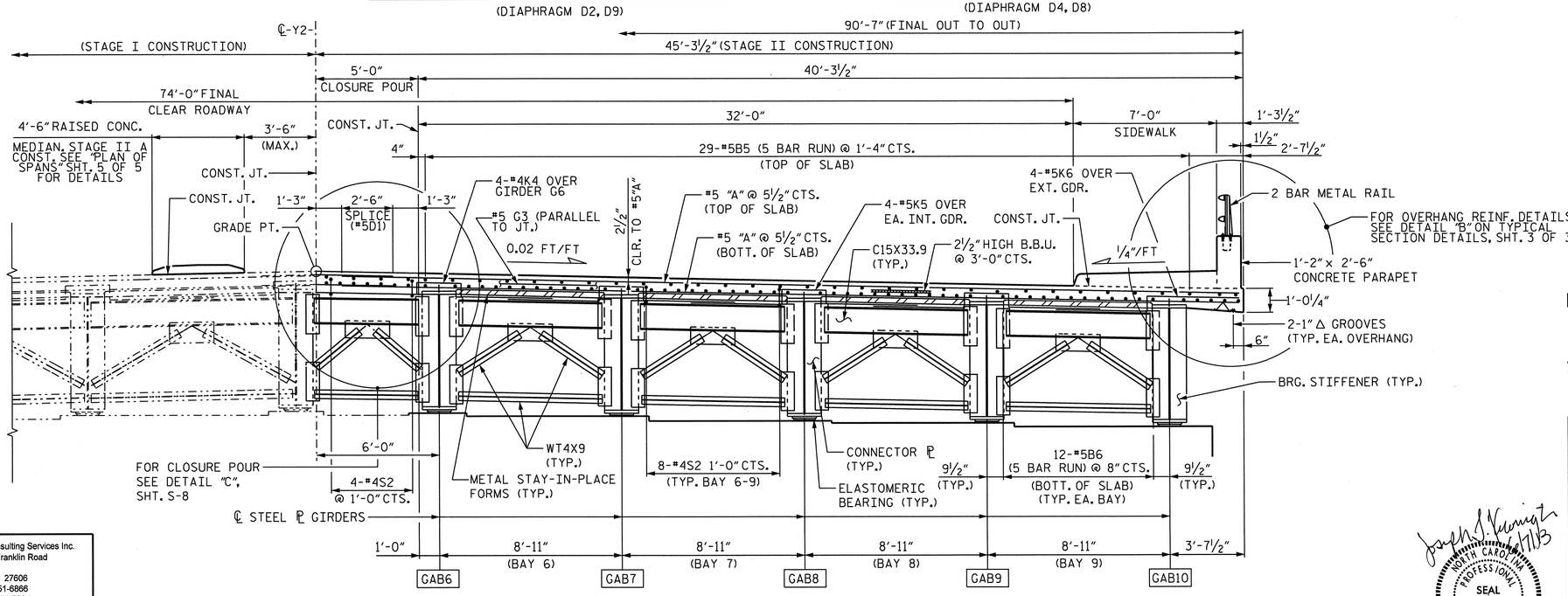

TYPICAL SECTION AT END BENTS

(DIAPHRAGM D6, D7)

Stantec Consulting Services Inc.
801 Jones Franklin Road
Suite 300
Raleigh, NC 27606
Tel. (919) 851-6866
Fax. (919) 851-7024
www.stantec.com
License No. F-0672

DRAWN BY : C. B. BAKER DATE : 9/12
CHECKED BY : J. T. KELVINGTON DATE : 9/12

DESIGN ENGINEER OF RECORD: J. T. KELVINGTON DATE : 04-16-13

NORTH CAROLINA PROFESSIONAL SEAL 13406 ENGINEER JOSEPH T. KELVINGTON — 4/16/13

PROJECT NO. U-2524C
GUILFORD COUNTY
STATION: 332+65.40 -L-

SHEET 2 of 3

STATE OF NORTH CAROLINA
DEPARTMENT OF TRANSPORTATION
RALEIGH
SUPERSTRUCTURE

TYPICAL SECTION
STAGE II CONSTRUCTION

REVISIONS						SHEET NO.
NO.	BY:	DATE:	NO.	BY:	DATE:	S-542
1			3			TOTAL SHEETS
2			4			836

U:\Structures\Y2 Horsepen Creek Rd\Drawing\Final\U-2524C_SD_TS_2.dgn 6/7/2013 2:58:59 PM Jgelle

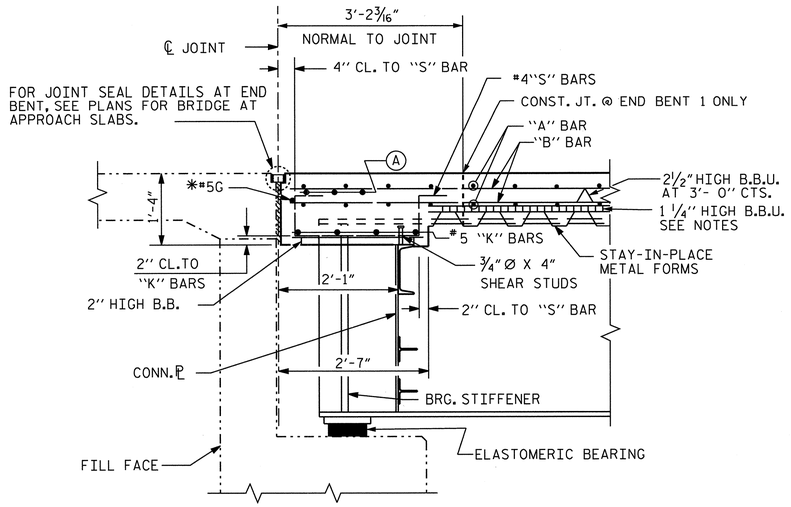

SECTION THROUGH END BENT DIAPHRAGM

* #5G BAR MAY BE SHIFTED SLIGHTLY, AS NECESSARY, TO CLEAR DIAPHRAGM AND REINFORCING STEEL.

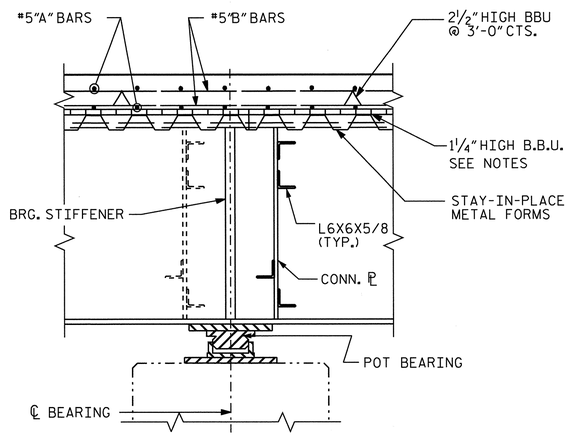

TYPICAL SECTION THROUGH DIAPHRAGM AT BENT 1

NOTES

PROVIDE 1 1/4" HIGH BEAM BOLSTERS UPPER AT 4'-0" CTS. ATOP THE METAL STAY-IN-PLACE FORMS TO SUPPORT THE BOTTOM MAT OF 'A' BARS. WHEN USING REMOVABLE FORMS, PROVIDE CONTINUOUS HIGH CHAIRS FOR METAL DECK (C.H.C.M.) @ 4'-0" CTS. WITH A HEIGHT TO SUPPORT THE BOTTOM MAT OF 'A' BARS A CLEAR DISTANCE OF 2 1/2" ABOVE THE TOP OF THE REMOVABLE FORM.

THE JOINT IN THE DECK SHALL BE SAWED PRIOR TO THE CASTING OF THE SIDEWALK.

NO CHAMFER IS REQUIRED ON CORNERS OF GIRDER BUILDUPS.

NO CHAMFER IS REQUIRED ON CORNER OF CONCRETE MEDIAN.

#5D1 AND #5D2 DOWELS SHALL BE PLACED IN THE SAME HORIZONTAL PLANE AS THE TOP AND BOTTOM SLAB REINFORCING STEEL.

METAL STAY-IN-PLACE FORMS SHALL NOT BE WELDED TO GIRDER FLANGES IN THE ZONES REQUIRING CHARPY V-NOTCH TEST. SEE STRUCTURAL STEEL DETAIL SHEETS.

STRUCTURAL STEEL ERECTION IN A CONTINUOUS UNIT SHALL BE COMPLETE BEFORE FALSEWORK OR FORMS ARE PLACED ON THE UNIT.

PREVIOUSLY CAST CONCRETE IN A CONTINUOUS UNIT SHALL HAVE ATTAINED A MINIMUM COMPRESSIVE STRENGTH OF 3,000 PSI BEFORE ADDITIONAL CONCRETE IS CAST IN THE UNIT.

CONCRETE PARAPET IN A CONTINUOUS UNIT SHALL NOT BE CAST UNTIL ALL SLAB CONCRETE IN THE UNIT HAS BEEN CAST AND HAS REACHED A MINIMUM COMPRESSIVE STRENGTH OF 3,000 PSI.

#5G1 AND #5G3 BARS MAY BE SHIFTED SLIGHTLY, AS NECESSARY, TO CLEAR REINFORCING STEEL CONFLICTS.

THE CONTRACTOR MAY, WHEN NECESSARY, PROPOSE A SCHEME FOR AVOIDING INTERFERENCE BETWEEN METAL STAY-IN-PLACE FORM SUPPORTS OR FORMS AND GIRDER STIFFENER OR CONNECTOR PLATES. THE PROPOSAL SHALL BE INDICATED, AS APPROPRIATE, ON EITHER THE STEEL WORKING DRAWINGS OR THE METAL STAY-IN-PLACE FORM WORKING DRAWINGS.

THE CONTRACTOR SHALL ADJUST THE GIRDER BUILD-UPS AS NECESSARY TO INCORPORATE A MAXIMUM PERMISSIBLE VARIATION IN POT BEARING DEPTH OF 1/2", SEE SPECIAL PROVISION FOR POT BEARINGS.

SEE "PLAN OF SPAN DETAILS", SHT. 3 OF 5 FOR ADDITIONAL END BENT DIAPHRAGM DETAILS.

ALL REINFORCING STEEL IN SIDEWALKS AND MEDIAN SHALL BE EPOXY COATED.

GROOVED CONTRACTION JOINTS, 1/2" IN DEPTH, SHALL BE TOOLED IN ALL EXPOSED FACES OF SIDEWALK AND MEDIAN STRIPS IN ACCORDANCE WITH ARTICLE 825-10(B) OF THE STANDARD SPECIFICATIONS. THE CONTRACTION JOINTS SHALL BE LOCATED AT A SPACING OF 8 FEET TO 10 FEET BETWEEN EXPANSION JOINTS. NO CONTRACTION JOINTS WILL BE REQUIRED FOR SEGMENTS LESS THAN 10 FEET IN LENGTH.

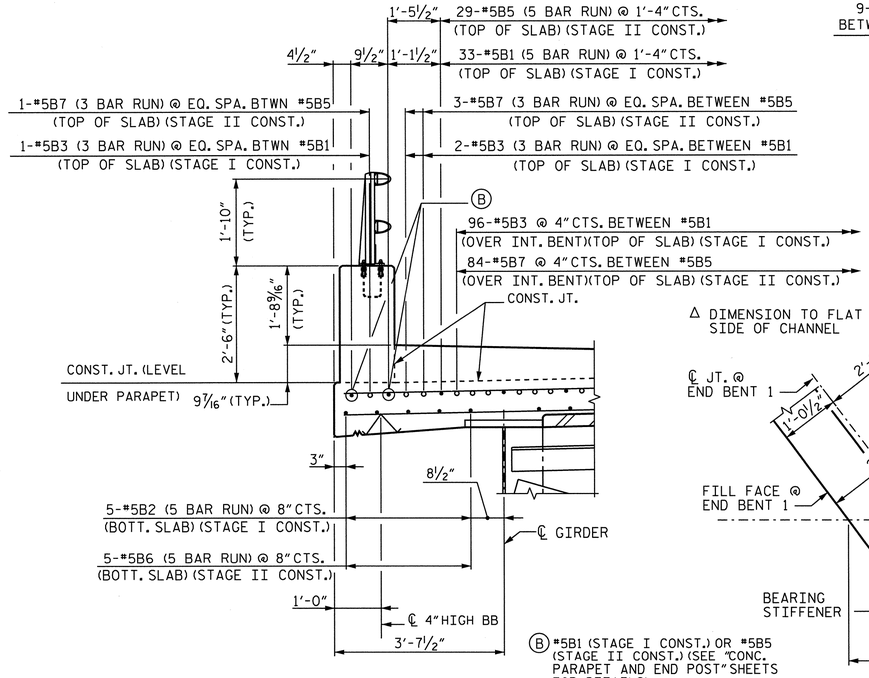

SECTION B-B

STG. I OVERHANG SHOWN, STAGE II OVERHANG SIMILAR.

Ⓑ #5B1 (STAGE I CONST.) OR #5B5 (STAGE II CONST.) (SEE "CONC. PARAPET AND END POST" SHEETS FOR DETAILS)

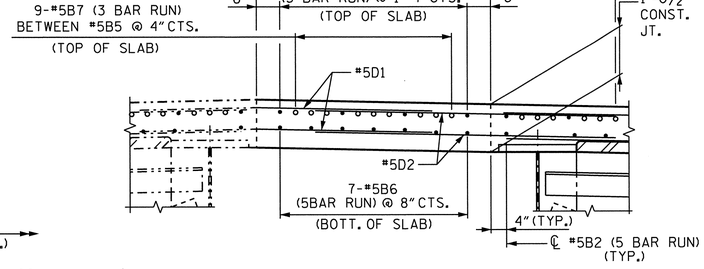

DETAIL "C"

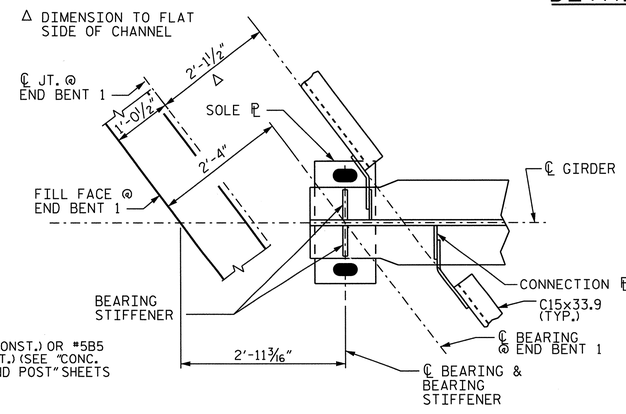

PLAN OF GIRDER AT END BENT

END BENT 1 SHOWN, END BENT 2 SIMILAR BY ROTATION

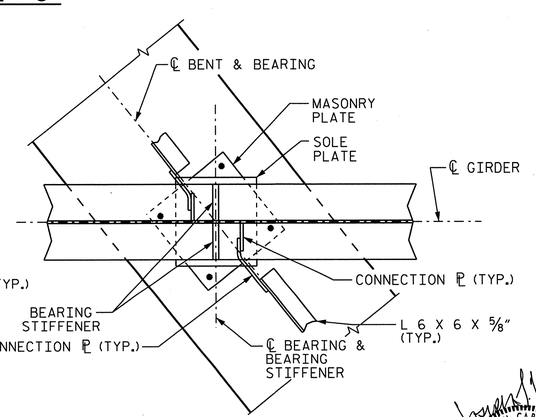

PLAN OF GIRDER AT BENT 1

PROJECT NO. U-2524C

GUILFORD COUNTY

STATION: 332+65.40 -L-

SHEET 3 OF 3

STATE OF NORTH CAROLINA
DEPARTMENT OF TRANSPORTATION
RALEIGH
SUPERSTRUCTURE

TYPICAL SECTION DETAILS

REVISIONS						SHEET NO.
NO.	BY:	DATE:	NO.	BY:	DATE:	S-543
1			3			TOTAL SHEETS
2			4			836

Stantec
Stantec Consulting Services Inc.
801 Jones Franklin Road
Suite 300
Raleigh, NC 27606
Tel. (919) 851-6866
Fax. (919) 851-7024
www.stantec.com
License No. F-0672

DRAWN BY : J. L. HENNEKES DATE : 9/12
CHECKED BY : J. T. KELVINGTON DATE : 9/12

DESIGN ENGINEER OF RECORD: J. T. KELVINGTON DATE : 04-16-13

NORTH CAROLINA PROFESSIONAL SEAL 13406 ENGINEER JOSEPH T. KELVINGTON

U:\Structures\V2 Horsepen Creek Rd\Drawing\Final\U-2524C_SD_TS_3.dgn 6/7/2013 2:53:00 PM jgelle

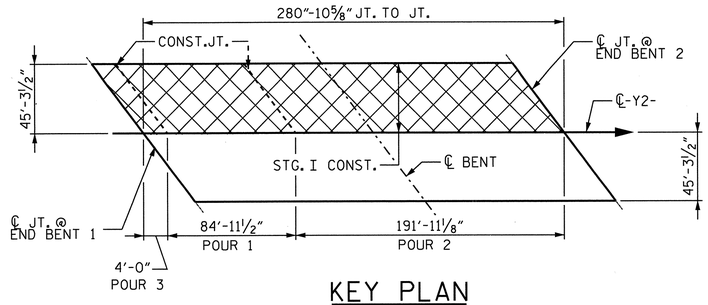

KEY PLAN

NOTES:

(A) #5A101 THRU #5A123 (3 BARS/MK.) (TOP OF SLAB)
#5A201 THRU #5A223 (3 BARS/MK.) (BOTT. OF SLAB.)

(B) DIMENSION FROM ℄ JT. TO CONST. JT. @ END BENT 1

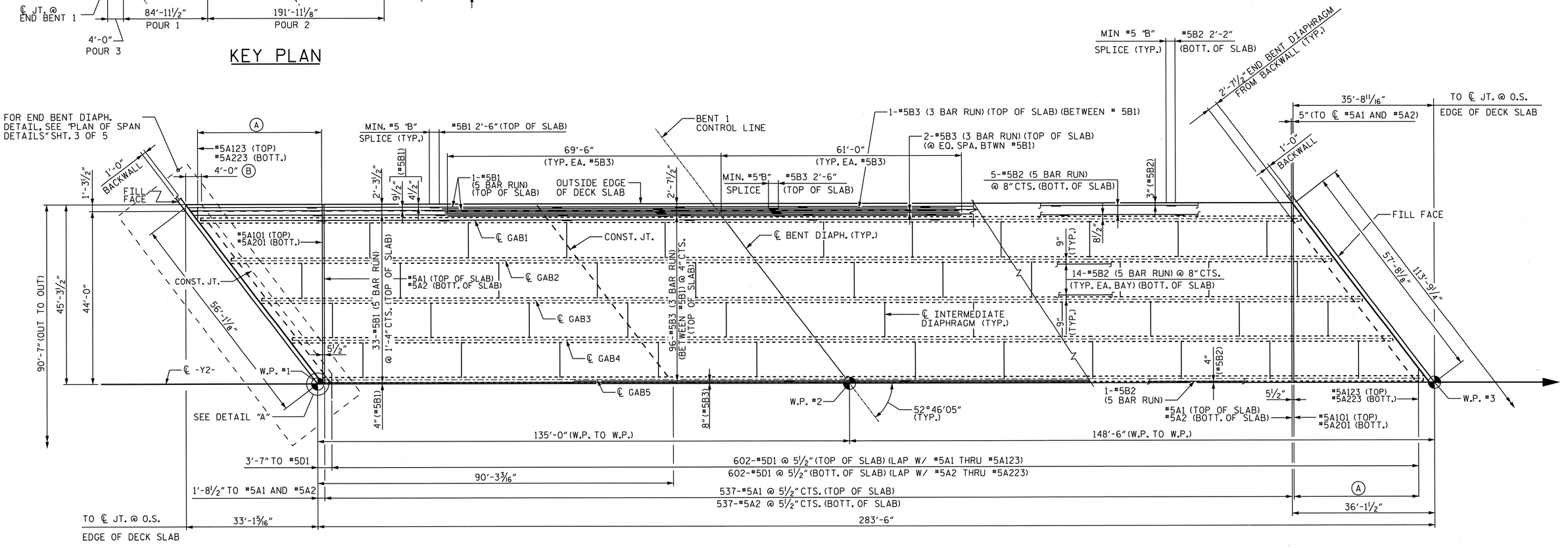

PLAN OF SPANS A & B
STAGE I CONSTRUCTION

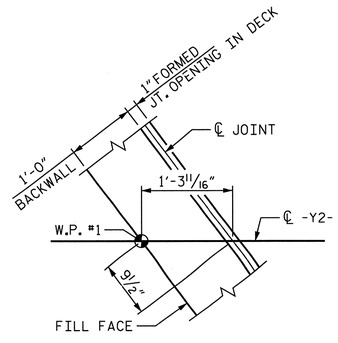

DETAIL "A"

JT. @ END BENT 1 SHOWN, JT. @ END BENT 2 IS TYPICAL

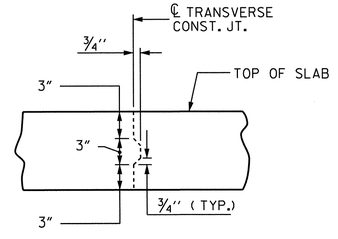

TRANSVERSE CONSTRUCTION JOINT DETAIL

NOTE: REINFORCING STEEL IN SLAB NOT SHOWN. LONGITUDINAL REINFORCING STEEL SHALL BE CONTINUOUS THRU JOINT

PROJECT NO. U-2524C
GUILFORD COUNTY
STATION: 332+65.40 -L-

SHEET 1 of 5

STATE OF NORTH CAROLINA
DEPARTMENT OF TRANSPORTATION
RALEIGH

SUPERSTRUCTURE

PLAN OF SPANS A & B
STAGE I CONSTRUCTION

REVISIONS						SHEET NO.
NO.	BY:	DATE:	NO.	BY:	DATE:	S-544
1			3			TOTAL SHEETS
2			4			836

Stantec Consulting Services Inc.
801 Jones Franklin Road
Suite 300
Raleigh, NC 27606
Tel. (919) 851-6866
Fax. (919) 851-7024
www.stantec.com
License No. F-0672

DRAWN BY : J. L. HENNEKES DATE : 04-11-13
CHECKED BY : J. T. KELVINGTON DATE : 04-11-13
DESIGN ENGINEER OF RECORD: J. T. KELVINGTON DATE : 04-16-13

NORTH CAROLINA PROFESSIONAL SEAL 13406 ENGINEER JOSEPH T. KELVINGTON 7/13

U:\Structures\Y2 Horsepen Creek Rd\Drawing\Final\U-2524C_SD_SLdgn 6/7/2013 2:53:04 PM jgelle

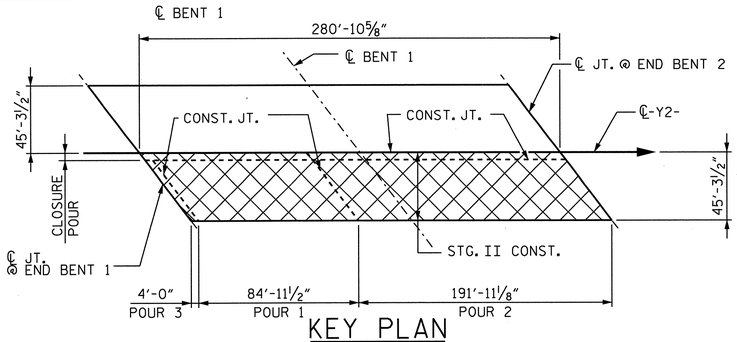

KEY PLAN

NOTES:

(A) #5A151 THRU #5A170 (5 BAR RUN) @ 5½" CTS. (3 BARS/ MK.) (TOP OF SLAB)
#5A251 THRU #5A270 (5 BAR RUN) @ 5½" CTS. (3 BAR/MK.) (BOTT. OF SLAB)

(B) DIMENSION FROM ℄ JT. TO CONST. JT. @ END BENT 1

(C) DIMENSION FROM CONST. JT. TO ℄ #5B6

(D) DIMENSION FROM CONST. JT. TO ℄ #5B7

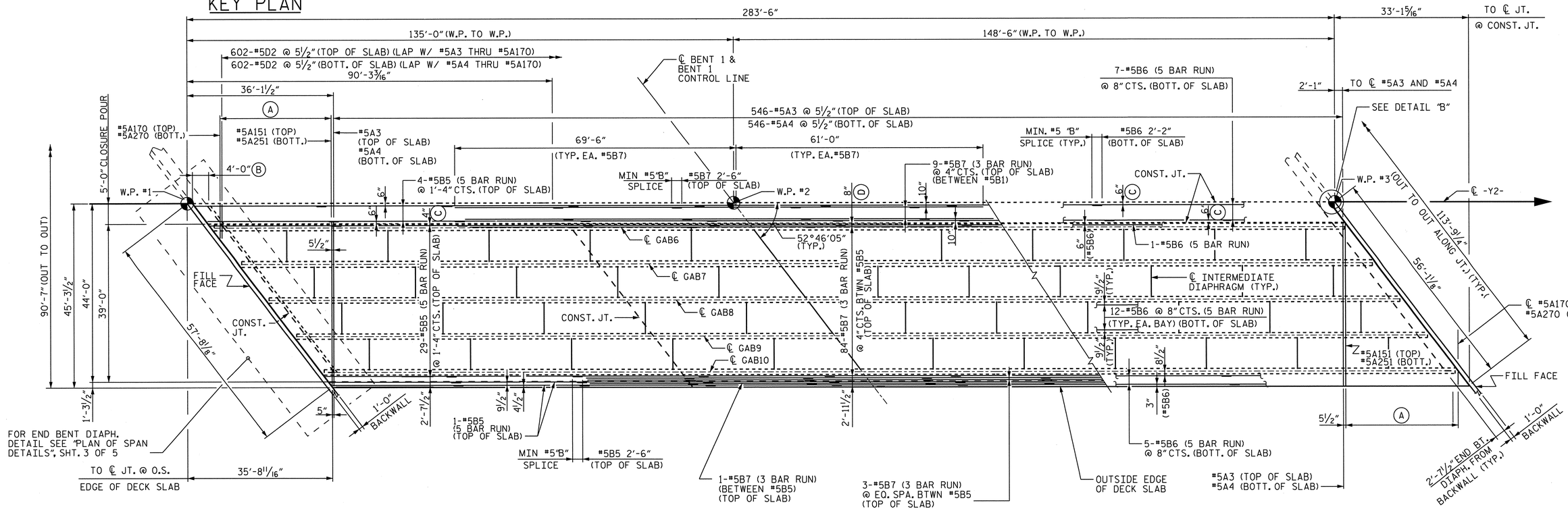

PLAN OF SPANS A & B
STAGE II CONSTRUCTION

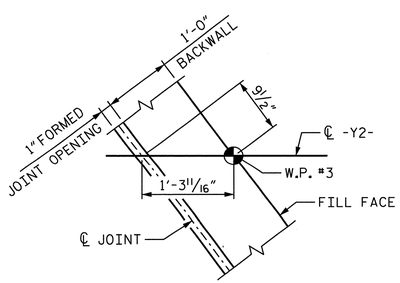

DETAIL "B"

JT. @ END BENT 2 SHOWN, JT. @ END BENT 1 IS TYPICAL

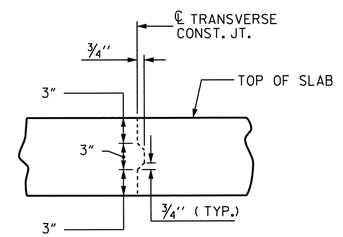

TRANSVERSE CONSTRUCTION JOINT DETAIL

NOTE: REINFORCING STEEL IN SLAB NOT SHOWN. LONGITUDINAL REINFORCING STEEL SHALL BE CONTINUOUS THRU JOINT

PROJECT NO. U-2524C

GUILFORD COUNTY

STATION: 332+65.40 -L-

SHEET 2 of 5

STATE OF NORTH CAROLINA
DEPARTMENT OF TRANSPORTATION
RALEIGH

SUPERSTRUCTURE

PLAN OF SPANS A & B
STAGE II CONSTRUCTION

REVISIONS						SHEET NO.
NO.	BY:	DATE:	NO.	BY:	DATE:	S-545
1			3			TOTAL SHEETS
2			4			836

Stantec
Stantec Consulting Services Inc.
801 Jones Franklin Road
Suite 300
Raleigh, NC 27606
Tel. (919) 851-6866
Fax. (919) 851-7024
www.stantec.com
License No. F-0672

DRAWN BY : J. L. HENNEKES DATE : 04-11-13
CHECKED BY : T. R. DUDECK DATE : 04-11-13
DESIGN ENGINEER OF RECORD: J. T. KELVINGTON DATE : 04-16-13

NORTH CAROLINA PROFESSIONAL SEAL 13406 ENGINEER JOSEPH T. KELVINGTON

U:\Structures\Y2 Horsepen Creek Rd\Drawing Final\U-2524C_SD_S2.dgn 6/7/2013 2:53:07 PM jgelle

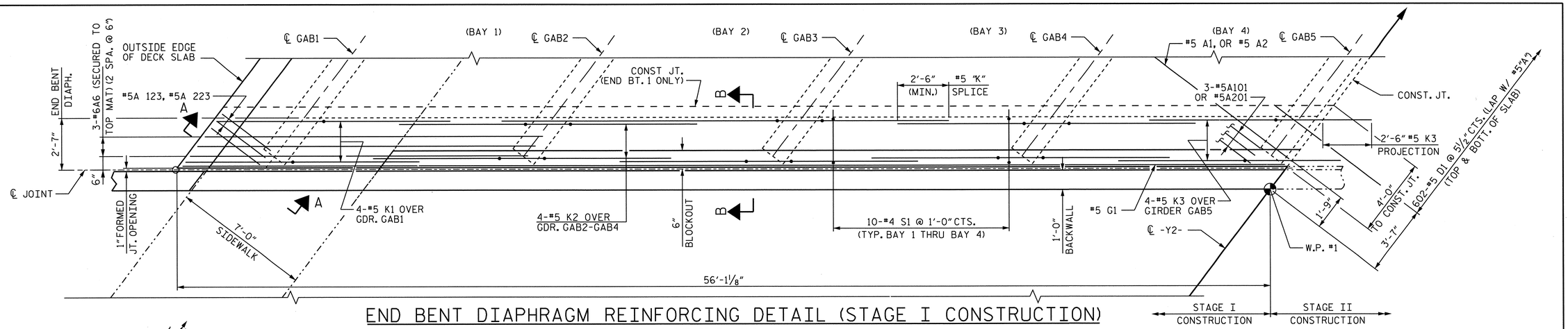

END BENT DIAPHRAGM REINFORCING DETAIL (STAGE I CONSTRUCTION)

DETAILS AT END BENT 1 SHOWN.
DETAILS AT END BENT 2 ARE TYPICAL BY ROTATION, EXCEPT AS NOTED.

NOTE:

SELECT "A" REINF. BARS HAVE BEEN SHOWN FOR CLARITY.

ALL LONGITUDINAL "B" REINF. HAS BEEN OMITTED FOR CLARITY.

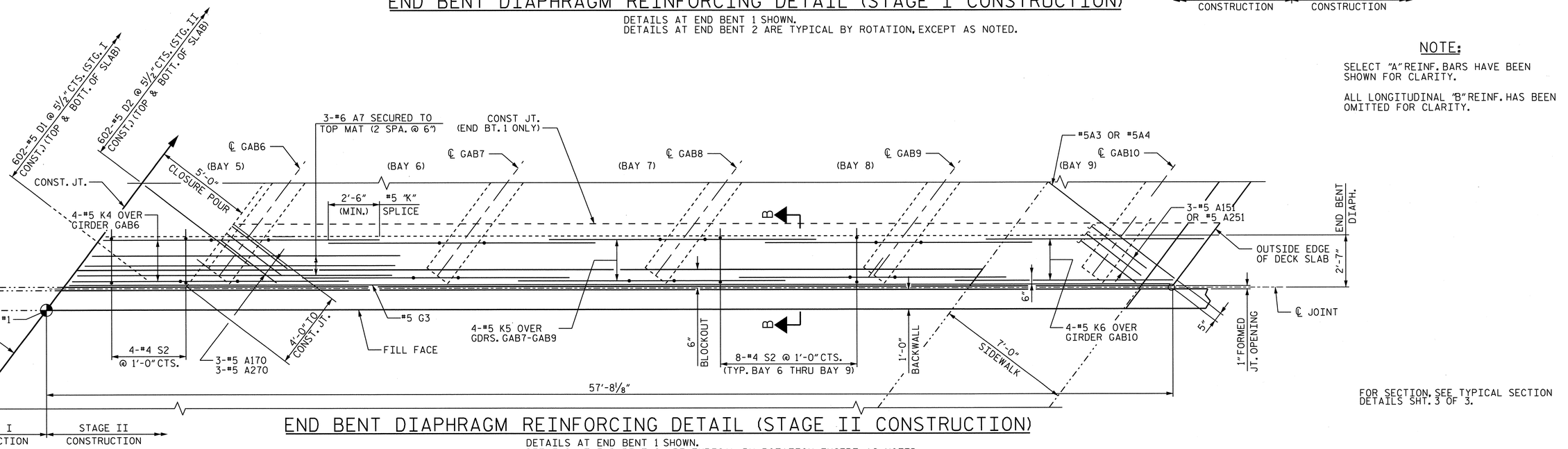

END BENT DIAPHRAGM REINFORCING DETAIL (STAGE II CONSTRUCTION)

DETAILS AT END BENT 1 SHOWN.
DETAILS AT END BENT 2 ARE TYPICAL BY ROTATION, EXCEPT AS NOTED.

NOTE: PLACE #6 A7 BARS @ ACUTE CORNERS OF DECK SLAB AS SHOWN.

FOR SECTION, SEE TYPICAL SECTION DETAILS SHT. 3 OF 3.

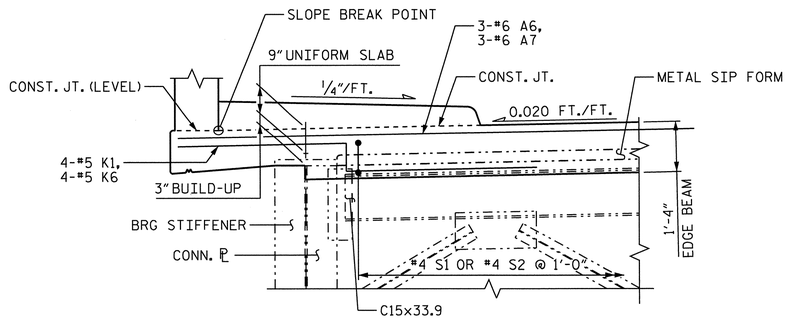

SECTION A-A

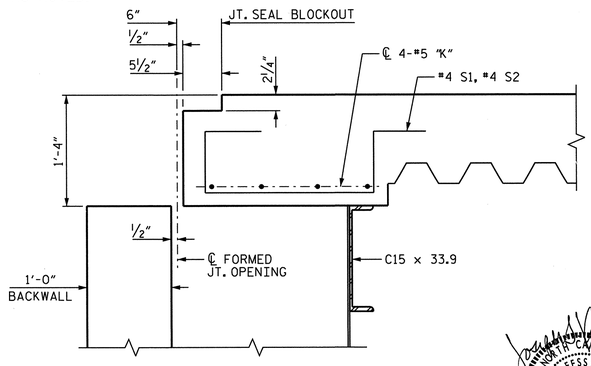

SECTION B-B

NOTE: APPROACH SLAB, DECK SLAB, AND "A" & "B" REINFORCEMENT NOT SHOWN FOR CLARITY

PROJECT NO. U-2524C

GUILFORD COUNTY

STATION: 332+65.40 -L-

SHEET 3 of 5

STATE OF NORTH CAROLINA
DEPARTMENT OF TRANSPORTATION
RALEIGH

SUPERSTRUCTURE

PLAN OF SPAN DETAILS

REVISIONS						SHEET NO.
NO.	BY:	DATE:	NO.	BY:	DATE:	S-546
1			3			TOTAL SHEETS
2			4			836

Stantec Consulting Services Inc.
801 Jones Franklin Road
Suite 300
Raleigh, NC 27606
Tel. (919) 851-6866
Fax. (919) 851-7024
www.stantec.com
License No. F-0672

DRAWN BY : J. L. HENNEKES DATE : 04-11-13
CHECKED BY : J. T. KELVINGTON DATE : 04-11-13

DESIGN ENGINEER OF RECORD: J. T. KELVINGTON DATE : 04-16-13

NORTH CAROLINA PROFESSIONAL SEAL 13406 ENGINEER JOSEPH T. KELVINGTON 6/7/13

U:\Structures\Y2 Horsepen Creek Rd\Drawing\Final\U-2524C_SD_S3.dgn 6/7/2013 2:53:09 PM jgelle

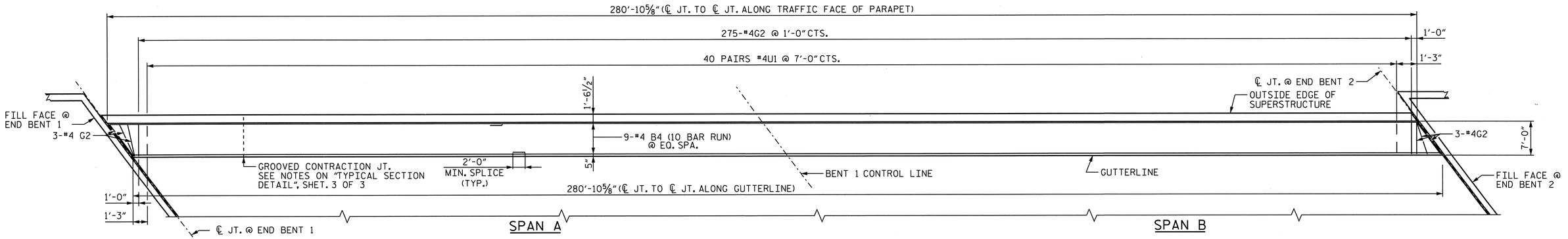

PLAN OF SIDEWALK ON BRIDGE SPANS (STAGE I CONSTRUCTION)

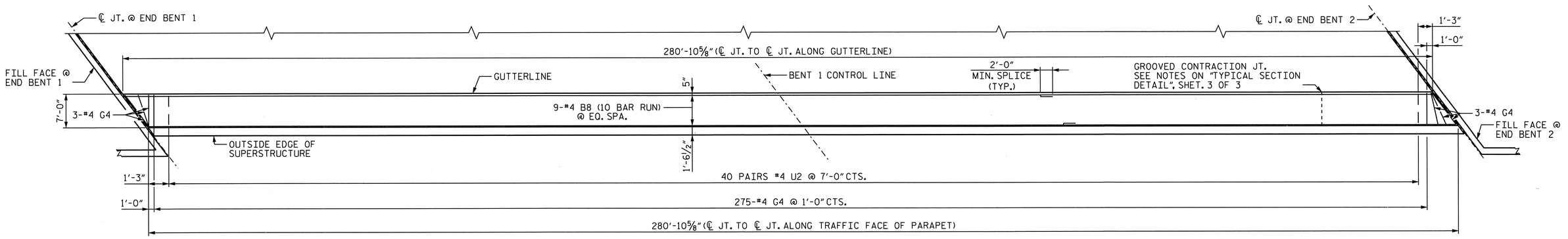

PLAN OF SIDEWALK ON BRIDGE SPANS (STAGE II CONSTRUCTION)

PARAPET REINFORCEMENT NOT SHOWN FOR CLARITY. SEE CONCRET PARAPET AND END POST SHEET.

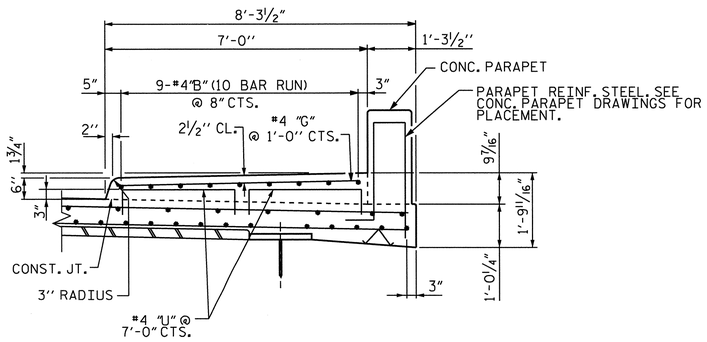

SECTION THRU SIDEWALK

NOTE: SEE SUPERSTRUCTURE TYPICAL SECTION FOR LONGITUDINAL REINFORCING BAR SPACING.

Stantec Consulting Services Inc.
801 Jones Franklin Road
Suite 300
Raleigh, NC 27606
Tel. (919) 851-6866
Fax. (919) 851-7024
www.stantec.com
License No. F-0672

DRAWN BY : J. L. HENNEKES DATE : 04-11-13
CHECKED BY : J. T. KELVINGTON DATE : 04-11-13
DESIGN ENGINEER OF RECORD: J. T. KELVINGTON DATE : 04-16-13

PROJECT NO. U-2524C
GUILFORD COUNTY
STATION: 332+65.40 -L-

SHEET 4 of 5

STATE OF NORTH CAROLINA
DEPARTMENT OF TRANSPORTATION
RALEIGH

SUPERSTRUCTURE

PLAN OF SPAN DETAILS (SIDEWALKS)

REVISIONS						SHEET NO.
NO.	BY:	DATE:	NO.	BY:	DATE:	S-547
1			3			TOTAL SHEETS
2			4			836

NORTH CAROLINA PROFESSIONAL SEAL 13406 ENGINEER JOSEPH T. KELVINGTON 6/7/13

U:\Structures\Y2 Horsepen Creek Rd\Drawing\Final\U-2524C_SD_S4.dgn 6/7/2013 2:53:11 PM Jgelle

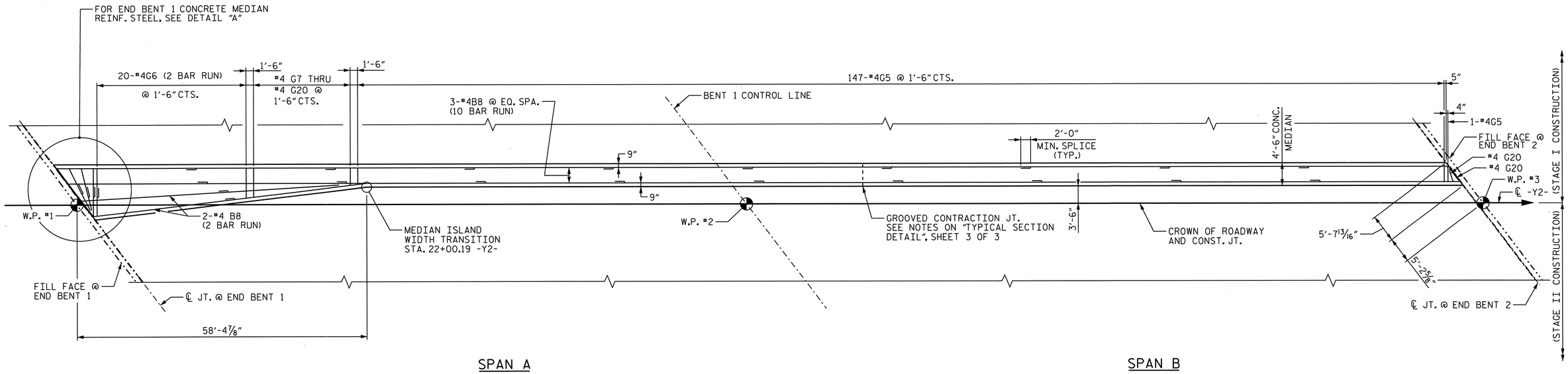

SPAN A

SPAN B

PLAN OF CONCRETE MEDIAN ON BRIDGE SPANS

NOTE:
JT. SEAL @ EA. END BENT SHALL
BE SAWED PRIOR TO CASTING CONCRETE MEDIAN.

PAYMENT FOR CONC. MEDIAN IS INCLUDED IN "REINF
CONC DECK SLAB" PAY ITEM.

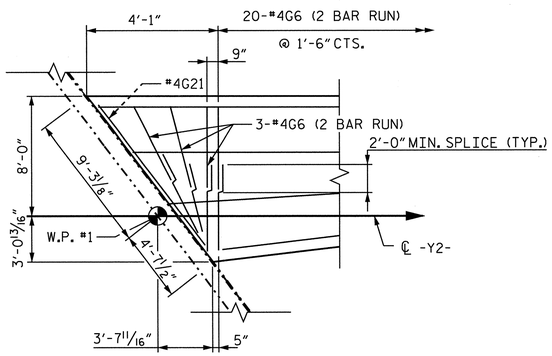

DETAIL "A"

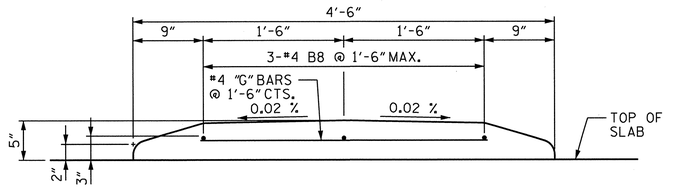

CONCRETE MEDIAN REINFORCING STEEL DETAILS

(ALL REINFORCING STEEL IN CONCRETE
MEDIAN SHALL BE EPOXY COATED)

PROJECT NO. U-2524C

GUILFORD COUNTY

STATION: 332+65.40 -L-

SHEET 5 of 5

STATE OF NORTH CAROLINA
DEPARTMENT OF TRANSPORTATION
RALEIGH

SUPERSTRUCTURE

PLAN OF SPAN DETAILS

REVISIONS						SHEET NO.
NO.	BY:	DATE:	NO.	BY:	DATE:	S-548
1			3			TOTAL SHEETS
2			4			836

Stantec
Stantec Consulting Services Inc.
801 Jones Franklin Road
Suite 300
Raleigh, NC 27606
Tel. (919) 851-6866
Fax. (919) 851-7024
www.stantec.com
License No. F-0672

DRAWN BY : J. L. HENNEKES DATE : 04-11-13
CHECKED BY : J. T. KELVINGTON DATE : 04-11-13

DESIGN ENGINEER OF RECORD: J. T. KELVINGTON DATE : 04-16-13

NORTH CAROLINA PROFESSIONAL SEAL 13406 ENGINEER JOSEPH T. KELVINGTON

U:\Structures\V2 Horsepen Creek Rd\Drawing\Final\U-2524C_SD_S5.dgn 6/7/2013 2:53:13 PM jgelle

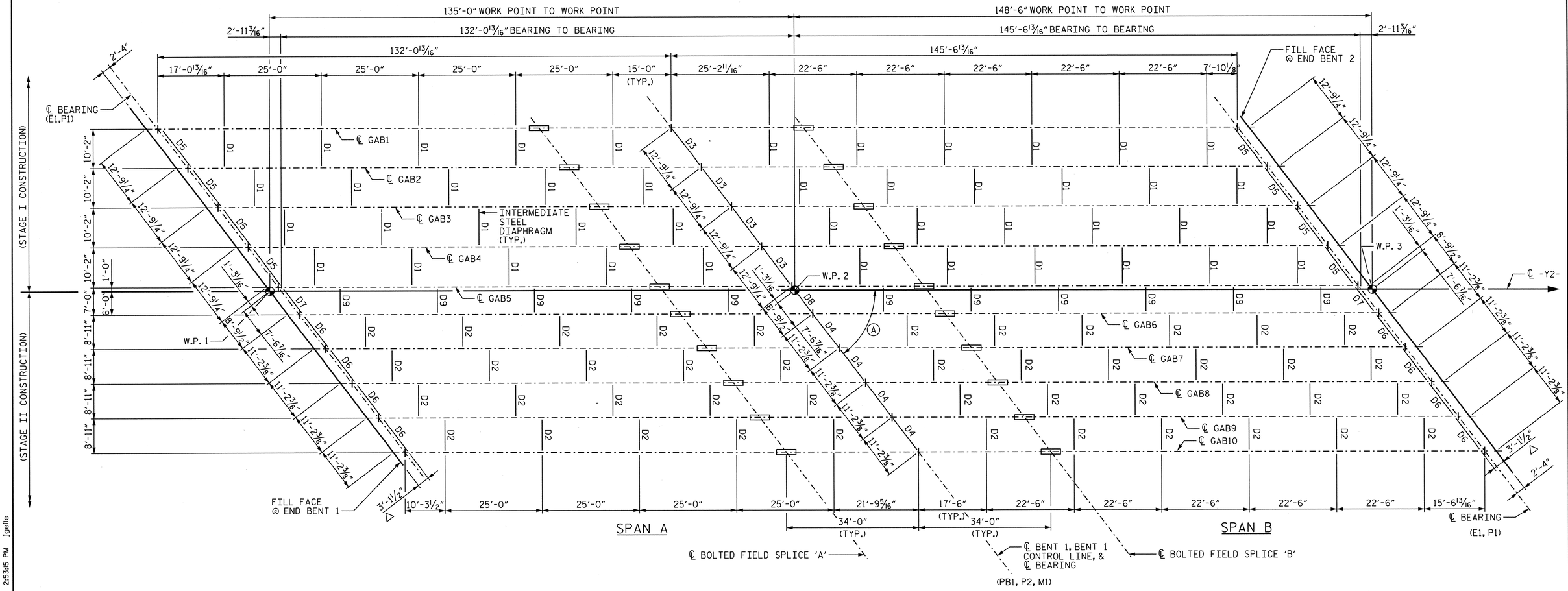

FRAMING PLAN

△ DIMENSION TO FLAT SIDE OF C15x33.9 STEEL CHANNEL DIAPHRAGM.

Ⓐ 52° 46' 05"(TYP.)

DENOTES BOLTED FIELD SPLICE

(E1, P1) DENOTES ELASTOMERIC BEARING WITH SOLE PLATE. SEE "ELASTOMERIC BEARING DETAILS".

(PB1, P2, M1) DENOTES POT BEARING WITH SOLE PLATE AND MASONRY PLATE. SEE "POT BEARING DETAILS".

BENT AND END BENTS ARE PARALLEL.

ALL DIMENSIONS ARE HORIZONTAL OR VERTICAL UNLESS NOTED.

CROSSFRAME DIAPHRAGMS D1, D2, AND D9 ARE TO BE PLACED NORMAL TO THE WEB OF THE GIRDER.

PROJECT NO. U-2524C

GUILFORD COUNTY

STATION: 332+65.40 -L-

STATE OF NORTH CAROLINA
DEPARTMENT OF TRANSPORTATION
RALEIGH

SUPERSTRUCTURE

FRAMING PLAN

REVISIONS						SHEET NO.
NO.	BY:	DATE:	NO.	BY:	DATE:	S-549
1			3			TOTAL SHEETS
2			4			836

Stantec Consulting Services Inc.
801 Jones Franklin Road
Suite 300
Raleigh, NC 27606
Tel. (919) 851-6866
Fax. (919) 851-7024
www.stantec.com
License No. F-0672

DRAWN BY : J. L. HENNEKES DATE : 04-11-13
CHECKED BY : J. T. KELVINGTON DATE : 04-11-13

DESIGN ENGINEER OF RECORD: J. T. KELVINGTON DATE : 04-16-13

NORTH CAROLINA PROFESSIONAL SEAL 13406 ENGINEER JOSEPH T. KELVINGTON

I:\Structures\U2 Horsepen Creek Rd\Drawing\Final\U-2524C_SD_FP.dgn 6/7/2013 2:53:15 PM jgelle

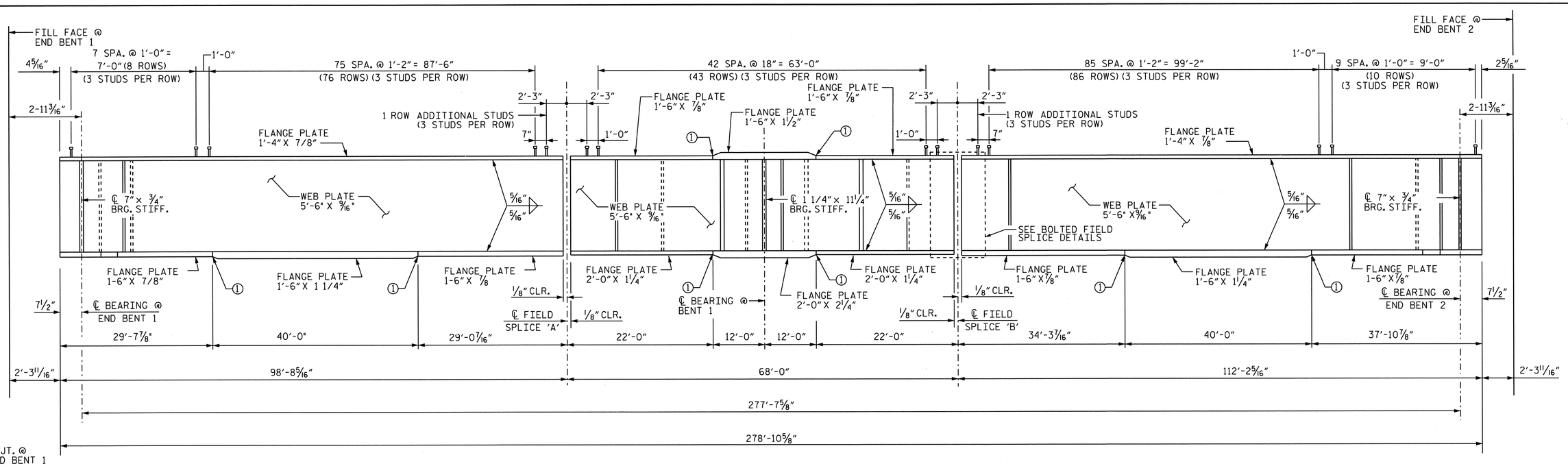

GIRDER ELEVATION

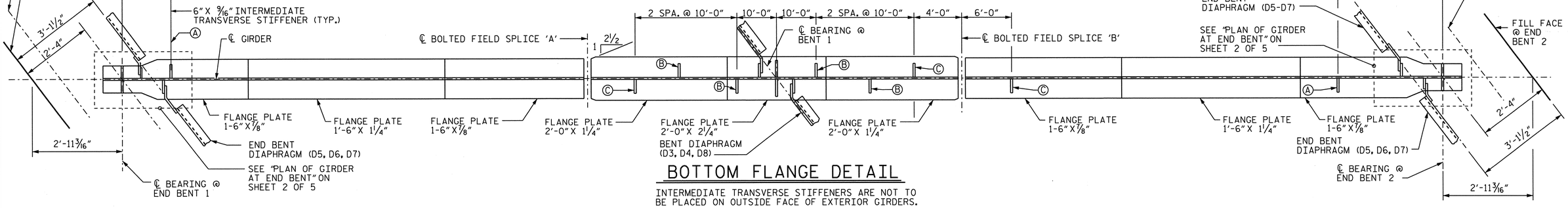

BOTTOM FLANGE DETAIL

INTERMEDIATE TRANSVERSE STIFFENERS ARE NOT TO BE PLACED ON OUTSIDE FACE OF EXTERIOR GIRDERS.

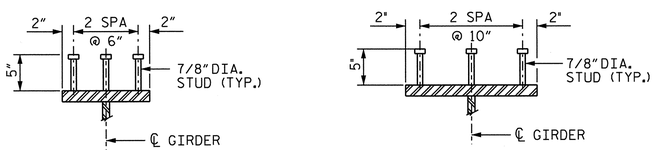

DETAIL @ 16" TOP FLANGE

DETAIL @ 24" TOP FLANGE

SHEAR STUD DETAILS

ALL STRUCTURAL STEEL SHALL BE AASHTO M270 GRADE 50W AND PAINTED IN ACCORDANCE WITH SYSTEM 4 OF ARTICLE 442-8 OF THE STANDARD SPECIFICATIONS UNLESS OTHERWISE NOTED ON THE PLANS.

ALL DIMENSIONS SHOWN ARE HORIZONTAL OR VERTICAL, UNLESS OTHERWISE NOTED.

ALL FIELD CONNECTIONS TO BE 7/8" DIA. HIGH STRENGTH BOLTS UNLESS OTHERWISE NOTED.

BEARING STIFFENERS ARE TO BE PLACED NORMAL TO THE WEB OF THE GIRDER AND SHALL BE PLUMB.

PERMITTED FLANGE AND WEB SHOP SPLICES SHALL NOT BE LOCATED WITHIN 15 FEET OF MAXIMUM DEAD LOAD DEFLECTION (NOR WITHIN 15 FEET OF INTERMEDIATE BEARINGS OF CONTINUOUS UNITS). KEEP 2 FEET MINIMUM BETWEEN WEB AND FLANGE SHOP SPLICES. KEEP 6" MINIMUM BETWEEN CONNECTOR PLATE OR TRANSVERSE STIFFENER WELDS AND WEB OR FLANGE SHOP SPLICES.

STUDS ON GIRDERS MAY BE SHIFTED UP TO 1" IF NECESSARY TO CLEAR FLANGE SPLICE WELD.

TENSION ON THE AASHTO M164 BOLTS SHALL BE CALIBRATED USING DIRECT TENSION INDICATOR WASHERS IN ACCORDANCE WITH ARTICLE 440-8 OF THE STANDARD SPECIFICATIONS.

ENDS OF BEAMS AND GIRDERS SHALL BE PLUMB.

FABRICATORS SHALL DETAIL DIAPHRAGM MEMBERS AND CONNECTIONS FOR FULL DEAD LOAD FIT UP. GIRDERS SHALL BE PLUMB AFTER THE FULL AMOUNT OF DEAD LOAD IS APPLIED.

BEARING STIFFENER MAY REQUIRE COPING IF WIDER THAN BOTTOM FLANGE.

Ⓐ INTERMEDIATE TRANSVERSE STIFFENER DETAIL "A". SEE SHT. 2 OF 5 FOR DETAILS.

Ⓑ INTERMEDIATE TRANSVERSE STIFFENER DETAIL "B". SEE SHT. 2 OF 5 FOR DETAILS.

Ⓒ INTERMEDIATE TRANSVERSE STIFFENER DETAIL "C". SEE SHT. 2 OF 5 FOR DETAILS.

Ⓘ FLANGE BUTT SPLICE. SEE STRUCTURAL STEEL MISCELLANEOUS GIRDER DETAILS, SHT. 2 OF 5.

Stantec Consulting Services Inc.
801 Jones Franklin Road
Suite 300
Raleigh, NC 27606
Tel. (919) 851-6866
Fax. (919) 851-7024
www.stantec.com
License No. F-0672

DRAWN BY : J. L. HENNEKES DATE : 04-11-13
CHECKED BY : T. R. DUDECK DATE : 04-11-13
DESIGN ENGINEER OF RECORD: J. T. KELVINGTON DATE : 04-16-13

PROJECT NO. U-2524C
GUILFORD COUNTY
STATION: 332+65.40 -L-

SHEET 1 of 5

STATE OF NORTH CAROLINA
DEPARTMENT OF TRANSPORTATION
RALEIGH

SUPERSTRUCTURE

STRUCTURAL STEEL GIRDER DETAILS

REVISIONS						SHEET NO.
NO.	BY:	DATE:	NO.	BY:	DATE:	S-550
1			3			TOTAL SHEETS
2			4			836

NORTH CAROLINA PROFESSIONAL SEAL 13406 ENGINEER JOSEPH T. KELVINGTON

U:\Structures\V2 Horsepen Creek Rd\Drawing\Final\U-2524C_SD_SS_1.dgn 6/7/2013 2:53:46 PM jgelle

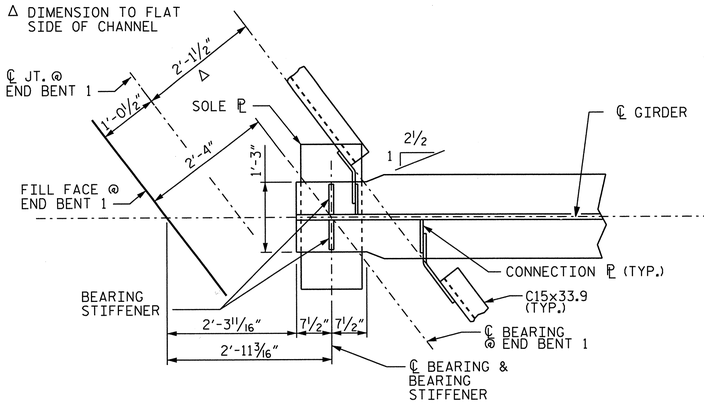

PLAN OF GIRDER AT END BENT

END BENT 1 SHOWN, END BENT 2 SIMILAR BY ROTATION

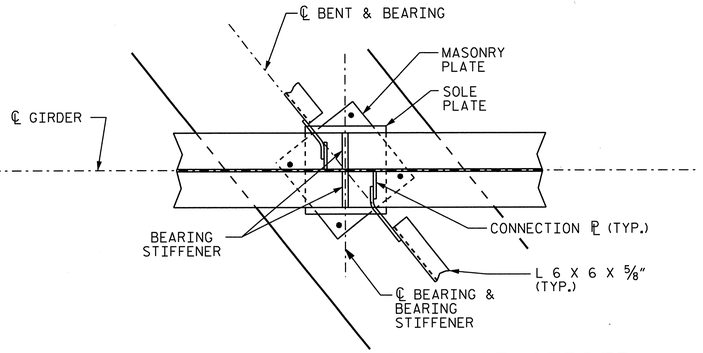

PLAN OF GIRDER AT BENT 1

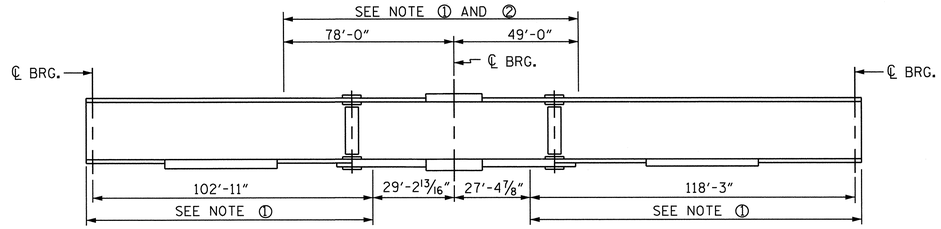

GIRDER MAKE UP

NOTE ① : CHARPY V-NOTCH TESTS ARE REQUIRED FOR ALL TOP OR BOTTOM FLANGE PLATES WHICH FALL WITHIN THESE LIMITS, ALL WEB PLATES, AND ALL SPLICE PLATES. IF A PERMITTED SHOP FLANGE SPLICE IS NOT USED, CHARPY V-NOTCH TESTS WILL BE REQUIRED FOR THE ENTIRE FLANGE PLATE. FOR CHARPY V-NOTCH TESTS, SEE ARTICLE 1072-9 OF THE STANDARD SPECIFICATIONS.

NOTE ② : NO WELDING OF FORMS OR FALSEWORK TO THE TOP FLANGE WILL BE PERMITTED IN THIS REGION

CHARPY V-NOTCH TESTS FOR CONTINUOUS PLATE GIRDERS

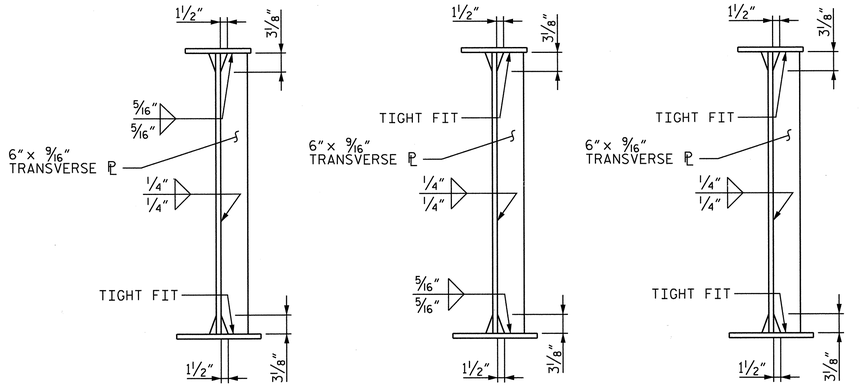

INTERMEDIATE STIFFENERS

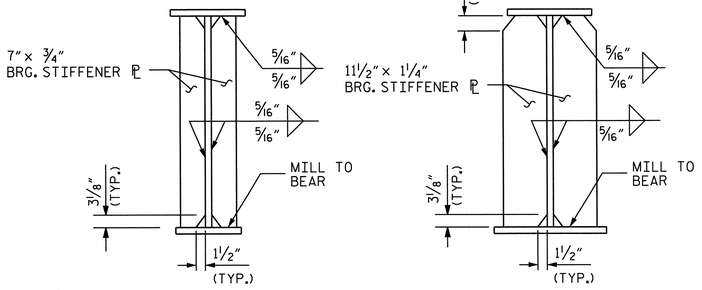

BEARING STIFFENERS

✱ GRIND SMOOTH AND FLUSH ON OUTER FACE OF EXTERIOR BEAMS /GIRDERS

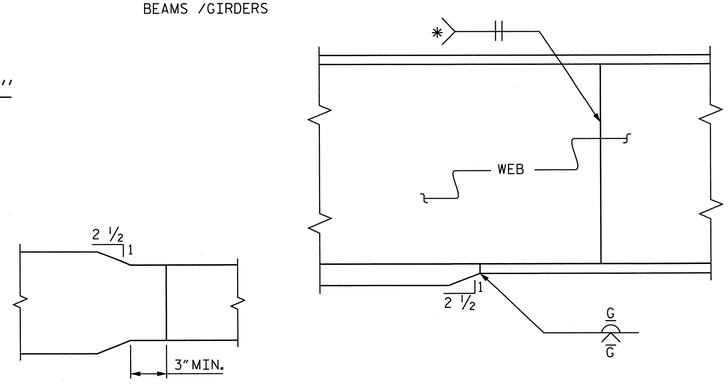

TYPICAL FLANGE AND WEB BUTT JOINT

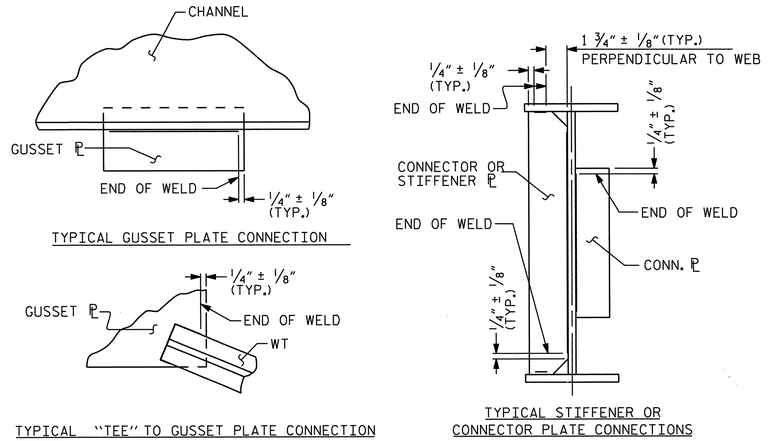

WELD TERMINATION DETAILS

FOR CONNECTOR ℙ WELD DETAILS SEE CROSS FRAMES D1 THRU D9 ON STRUCTURAL STEEL DETAILS, SHEET 3 OF 5.

PROJECT NO. U-2524C

GUILFORD COUNTY

STATION: 332+65.40 -L-

SHEET 2 of 5

STATE OF NORTH CAROLINA
DEPARTMENT OF TRANSPORTATION
RALEIGH

SUPERSTRUCTURE

STRUCTURAL STEEL DETAILS

REVISIONS						SHEET NO.
NO.	BY:	DATE:	NO.	BY:	DATE:	S-551
1			3			TOTAL SHEETS
2			4			836

Stantec Consulting Services Inc.
801 Jones Franklin Road
Suite 300
Raleigh, NC 27606
Tel. (919) 851-6866
Fax. (919) 851-7024
www.stantec.com
License No. F-0672

DRAWN BY : J. L. HENNEKES DATE : 04-11-13
CHECKED BY : J. T. KELVINGTON DATE : 04-11-13

DESIGN ENGINEER OF RECORD: J. T. KELVINGTON DATE : 04-16-13

NORTH CAROLINA PROFESSIONAL SEAL 13406 ENGINEER JOSEPH T. KELVINGTON 13

U:\Structures\Y2 Horsepen Creek Rd\Drawing\Final\U-2524C_SD_SS_2.dgn 6/7/2013 2:53:18 PM lgelle

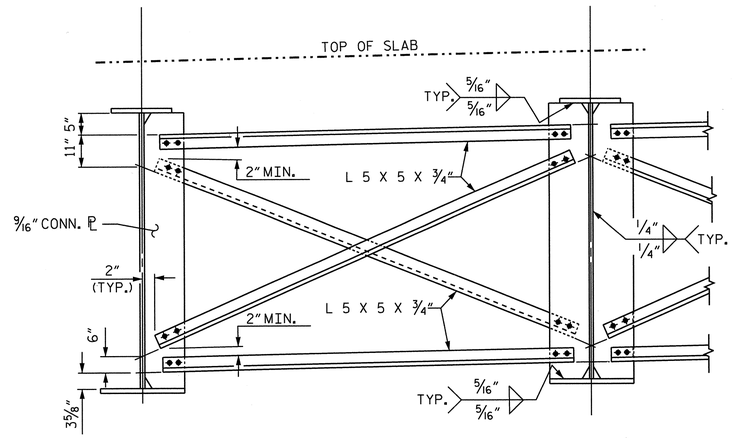

TYPICAL INTERMEDIATE CROSSFRAME

DIAPHRAGMS D1, D2

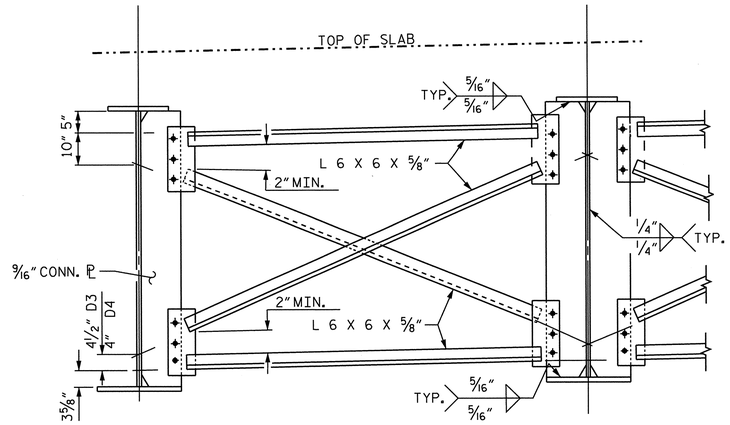

TYPICAL BENT CROSSFRAME

DIAPHRAGMS D3, D4

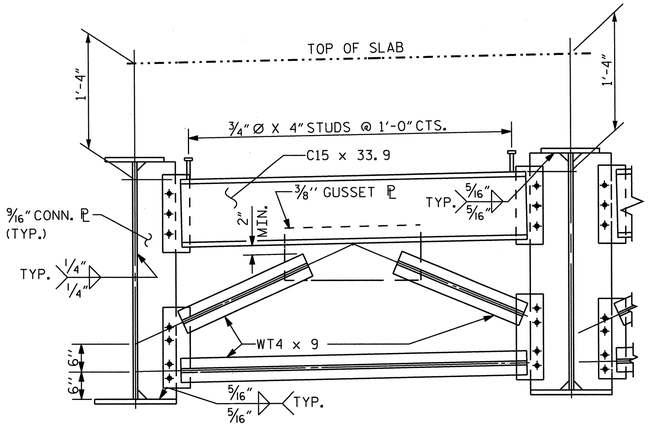

TYPICAL END BENT CROSSFRAME

DIAPHRAGMS D5, D6

INTERMEDIATE CROSSFRAME IN CLOSURE BAY †

DIAPHRAGMS D9

BENT CROSSFRAME IN CLOSURE BAY †

DIAPHRAGMS D8

END BENT CROSSFRAME IN CLOSURE BAY †

DIAPHRAGMS D7

△ VERTICAL SLOTS IN CONNECTION PL 1"X1½" WASHER PL

□ HORIZONTAL SLOTS IN CONNECTION PL W/ 1"x 1½" WASHER PL

† NUTS OR BOLTS FOR CONNECTION DIAPHRAGM TO CONNECTION PLATE SHALL BE LEFT LOOSE FOR PURPOSE OF ADJUSTMENT UNTIL BOTH SIDES OF SLAB HAVE BEEN POURED.

FOR WELD TERMINATION DETAILS, SEE "STRUCTURAL STEEL DETAILS", SHEET 2 OF 5.

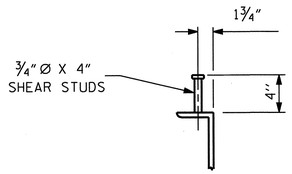

SHEAR STUD DETAILS

Stantec Consulting Services Inc.
801 Jones Franklin Road
Suite 300
Raleigh, NC 27606
Tel. (919) 851-6866
Fax. (919) 851-7024
www.stantec.com
License No. F-0672

DRAWN BY : J. L. HENNEKES DATE : 04-11-13
CHECKED BY : J. T. KELVINGTON DATE : 04-11-13
DESIGN ENGINEER OF RECORD: J. T. KELVINGTON DATE : 04-16-13

PROJECT NO. U-2524C
GUILFORD COUNTY
STATION: 332+65.40 -L-

SHEET 3 of 5

STATE OF NORTH CAROLINA
DEPARTMENT OF TRANSPORTATION
RALEIGH
SUPERSTRUCTURE

STRUCTURAL STEEL DETAILS

REVISIONS						SHEET NO.
NO.	BY:	DATE:	NO.	BY:	DATE:	S-552
1			3			TOTAL SHEETS
2			4			836

NORTH CAROLINA PROFESSIONAL SEAL 13406 ENGINEER JOSEPH T. KELVINGTON 6/7/13

U:\Structures\Y2 Horsepen Creek Rd\Drawing\Final\U-2524C_SD_SS_3.dgn 6/7/2013 2:53:20 PM jgelle

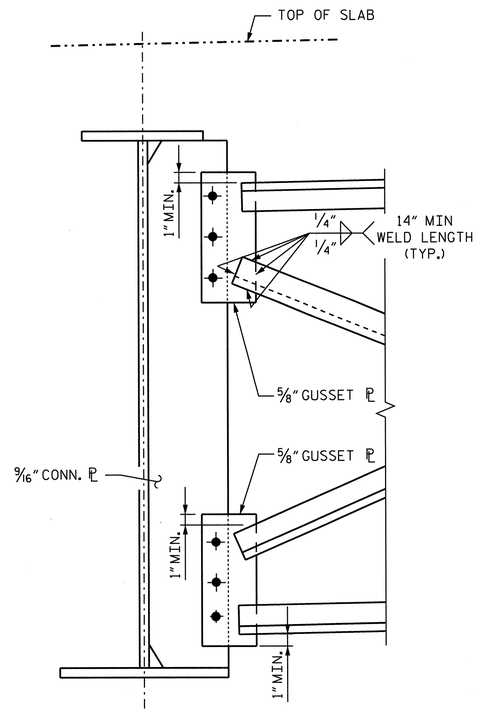

GUSSET PLATE DETAILS
BENT

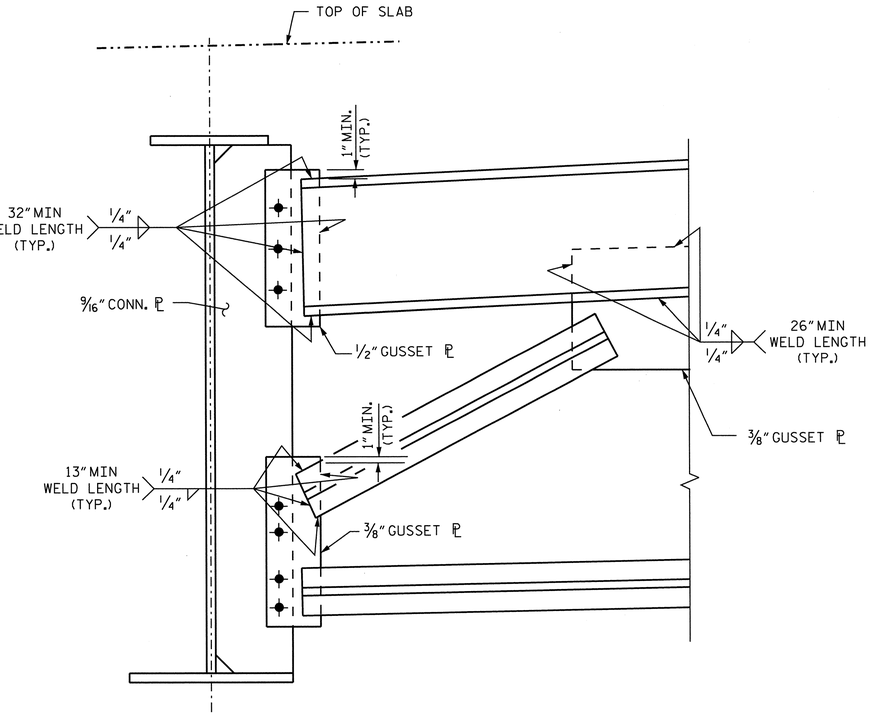

GUSSET PLATE DETAILS
END BENT

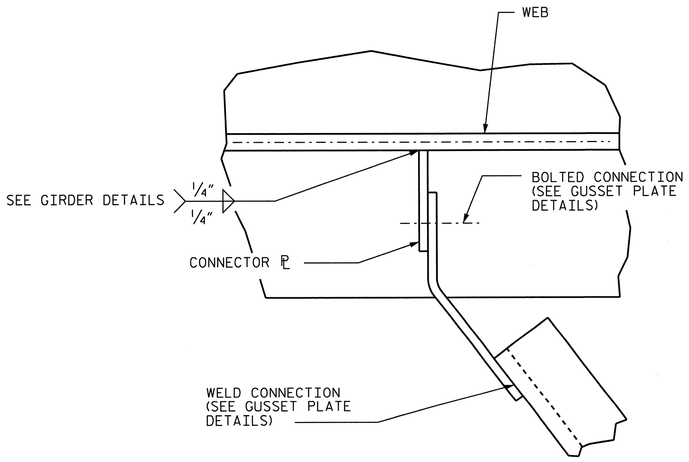

DETAIL "B"

Stantec
Stantec Consulting Services Inc.
801 Jones Franklin Road
Suite 300
Raleigh, NC 27606
Tel. (919) 851-6866
Fax. (919) 851-7024
www.stantec.com
License No. F-0672

DRAWN BY : J. L. HENNEKES DATE : 04-11-13
CHECKED BY : J. T. KELVINGTON DATE : 04-11-13
DESIGN ENGINEER OF RECORD: J. T. KELVINGTON DATE : 04-16-13

NORTH CAROLINA PROFESSIONAL SEAL 13406 ENGINEER JOSEPH T. KELVINGTON 6/7/13

PROJECT NO. U-2524C
GUILFORD COUNTY
STATION: 332+65.40 -L-

SHEET 4 of 5

STATE OF NORTH CAROLINA
DEPARTMENT OF TRANSPORTATION
RALEIGH

SUPERSTRUCTURE

STRUCTURAL STEEL DETAILS

REVISIONS						SHEET NO.
NO.	BY:	DATE:	NO.	BY:	DATE:	S-553
1			3			TOTAL SHEETS
2			4			836

U:\Structures\V2 Horsepen Creek Rd\Drawing\Final\U-2524C_SD_SS_4.dgn 6/7/2013 2:53:22 PM jgelle

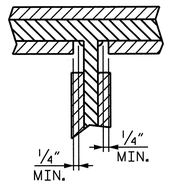

DETAIL ''A''
(TOP SHOWN, BOTT. SIMILAR)

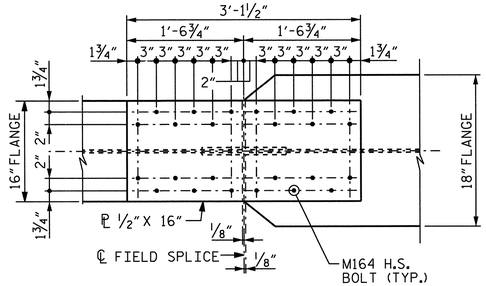

PLAN OF TOP FLANGE SPLICE 'A'

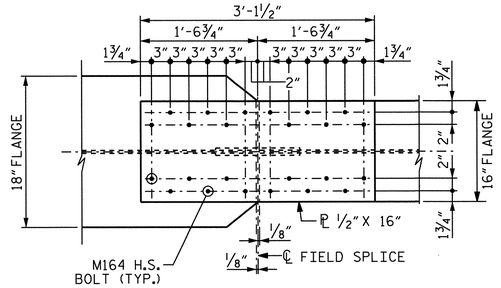

PLAN OF TOP FLANGE SPLICE 'B'

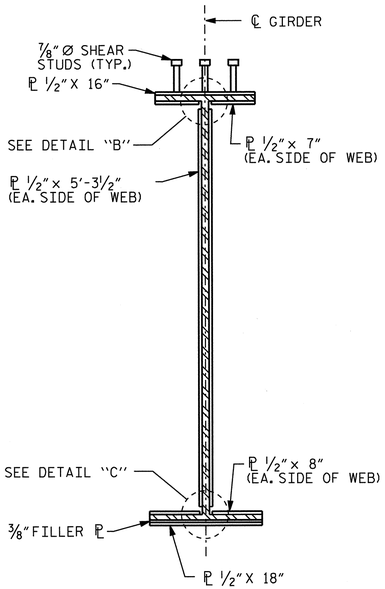

SECTION THRU SPLICE 'A'

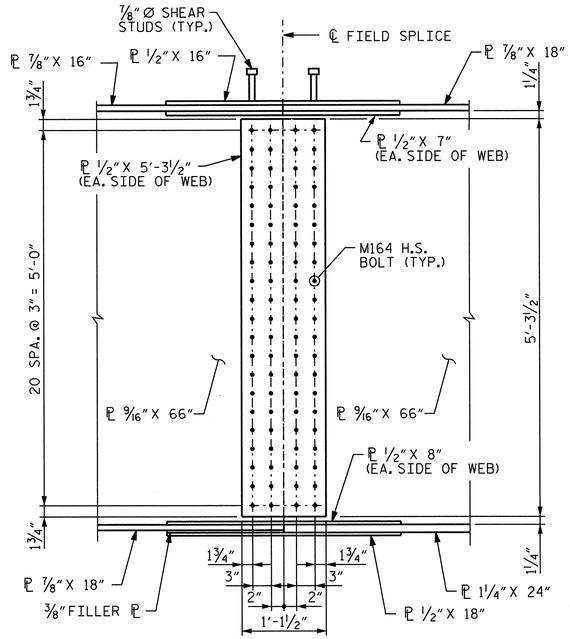

SPLICE 'A' ELEVATION

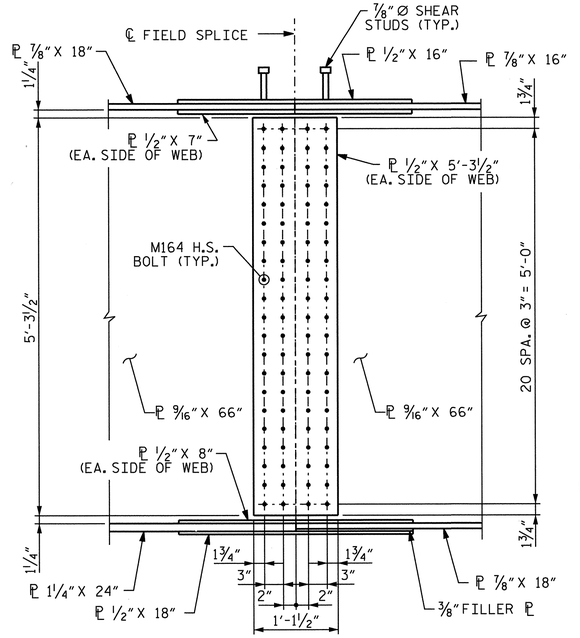

SPLICE 'B' ELEVATION

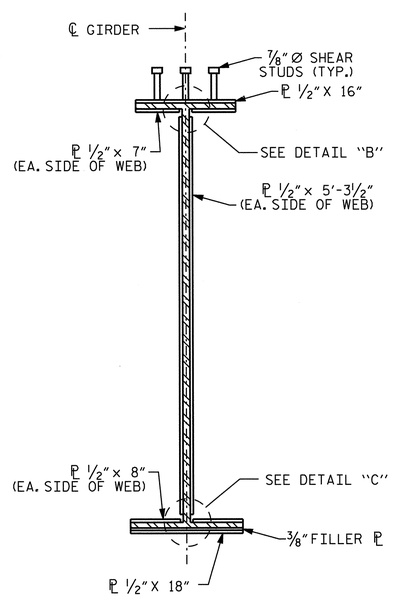

SECTION THRU SPLICE 'B'

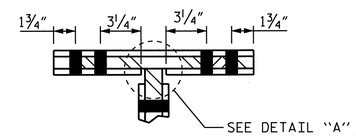

DETAIL ''B''

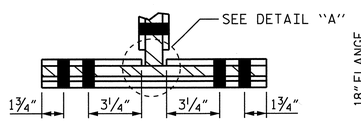

DETAIL ''C''

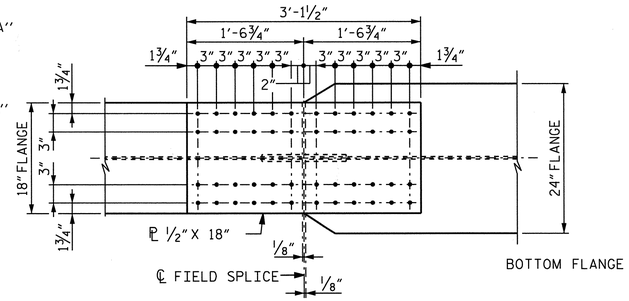

PLAN OF BOTTOM FLANGE SPLICE 'A'

FIELD SPLICE 'A'

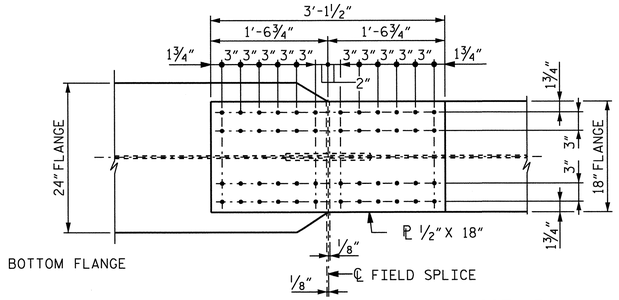

PLAN OF BOTTOM FLANGE SPLICE 'B'

FIELD SPLICE 'B'

Stantec Consulting Services Inc.
801 Jones Franklin Road
Suite 300
Raleigh, NC 27606
Tel. (919) 851-6866
Fax. (919) 851-7024
www.stantec.com
License No. F-0672

DRAWN BY : C. B. BAKER DATE : 04-11-13
CHECKED BY : T. R. DUDECK DATE : 04-11-13
DESIGN ENGINEER OF RECORD: J. T. KELVINGTON DATE : 04-16-13

NORTH CAROLINA PROFESSIONAL SEAL 13406 ENGINEER JOSEPH T. KELVINGTON

PROJECT NO. U-2524C
GUILFORD COUNTY
STATION: 332+65.40 -L-

SHEET 5 of 5

STATE OF NORTH CAROLINA
DEPARTMENT OF TRANSPORTATION
RALEIGH

SUPERSTRUCTURE

STRUCTURAL STEEL
BOLTED FIELD SPLICE DETAILS

REVISIONS						SHEET NO.
NO.	BY:	DATE:	NO.	BY:	DATE:	S-554
1			3			TOTAL SHEETS
2			4			836

U:\Structures\Y2 Horsepen Creek Rd\Drawing\Final\U-2524C_SD_SS_5.dgn 6/7/2013 2:53:24 PM jgelle

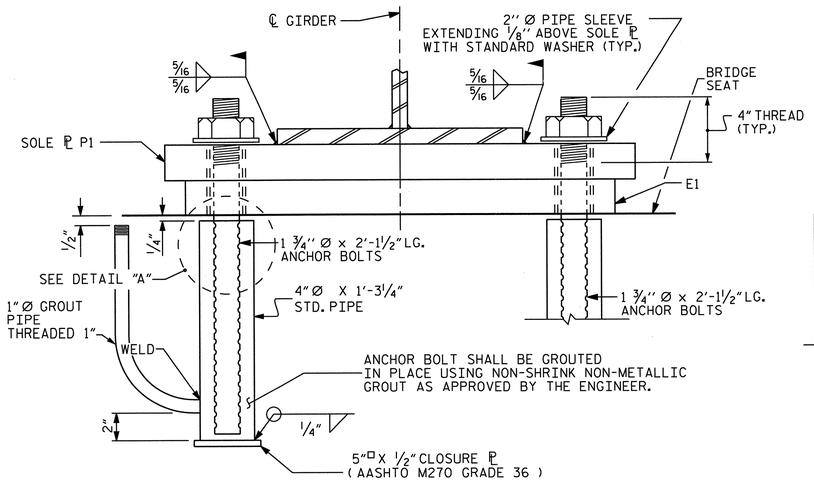

EXPANSION

END VIEW

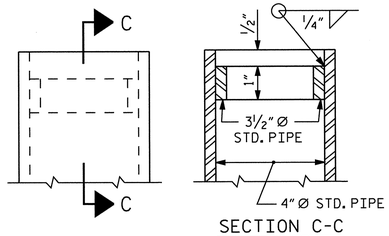

SECTION C-C

DETAIL "A"

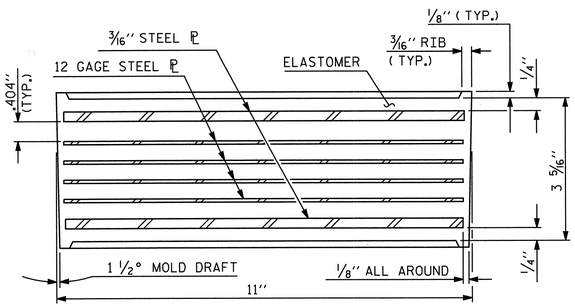

TYPICAL SECTION OF ELASTOMERIC BEARING

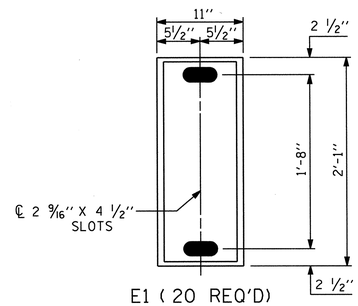

E1 (20 REQ'D)

PLAN VIEW OF ELASTOMERIC BEARING

TYPE IV

DIRECTION OF INCREASING STATIONS

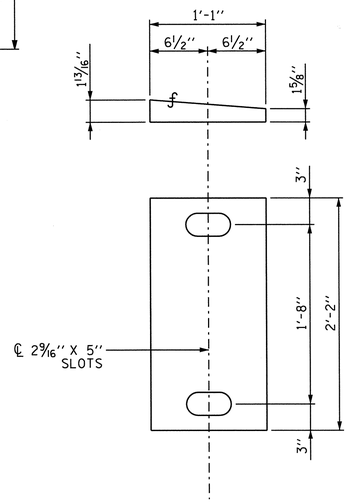

P1
(EXSPANSION)
P1 (20 REQ'D)

SOLE PLATE DETAILS

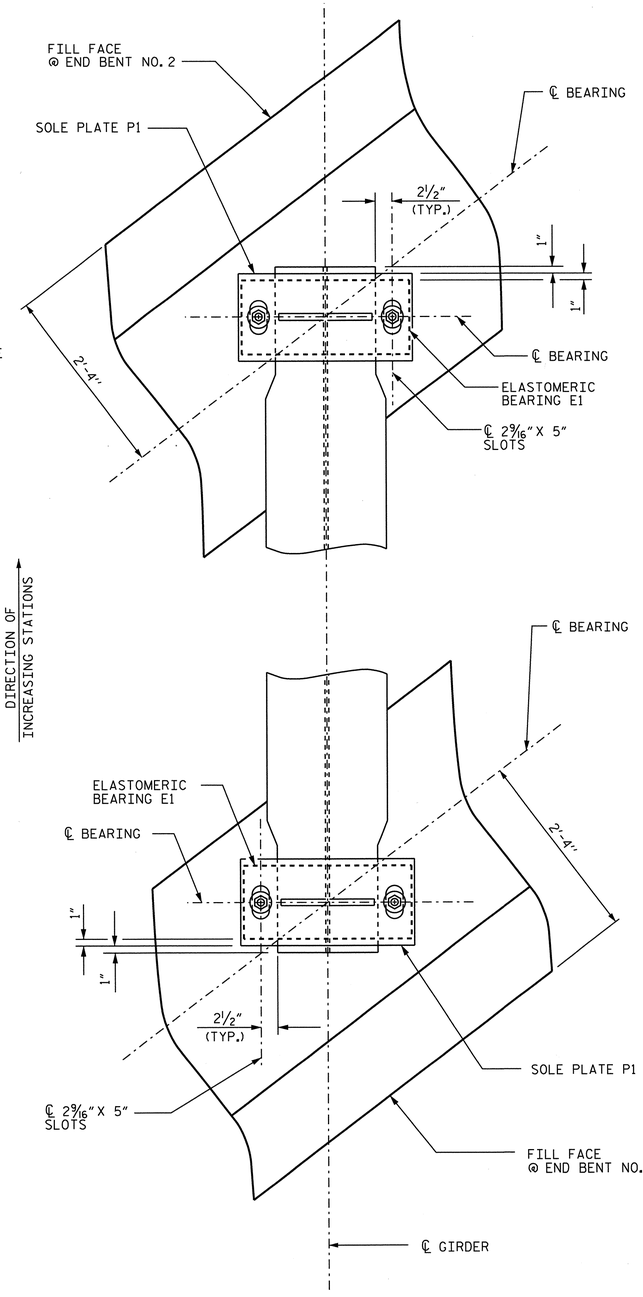

PLAN

BOTTOM FLANGE DETAIL

NOTES

AT ALL FIXED POINTS OF SUPPORT, NUTS FOR ANCHOR BOLTS ARE TO BE TIGHTENED FINGER TIGHT AND THEN BACKED OFF 1/2 TURN. THE THREAD OF THE NUT AND BOLT SHALL THEN BE BURRED WITH A SHARP POINTED TOOL.

THE 2" Ø PIPE SLEEVE SHALL BE CUT FROM SCHEDULE 40 PVC PLASTIC PIPE. THE PVC PLASTIC PIPE SHALL MEET THE REQUIREMENTS OF ASTM D1785.

THE PAYMENT FOR THE PIPE SLEEVES SHALL BE INCLUDED IN THE SEVERAL PAY ITEMS.

SOLE PLATE SHALL BE AASHTO M270 GRADE 50W AND SHALL NOT BE GALVANIZED. ANCHOR BOLTS, NUTS AND WASHERS SHALL BE GALVANIZED IN ACCORDANCE WITH THE STANDARD SPECIFICATIONS.

ANCHOR BOLTS SHALL MEET THE REQUIREMENTS OF ASTM A449. NUTS SHALL MEET THE REQUIREMENTS OF AASHTO M291-DH OR AASHTO M292-2H. WASHERS SHALL MEET THE REQUIREMENTS OF AASHTO M293. SHOP DRAWINGS ARE NOT REQUIRED FOR ANCHOR BOLTS, NUTS AND WASHERS. SHOP INSPECTION IS REQUIRED.

WHEN FIELD WELDING THE SOLE PLATE TO THE GIRDER FLANGE, USE TEMPERATURE INDICATING WAX PENS, OR OTHER SUITABLE MEANS, TO ENSURE THAT THE TEMPERATURE OF THE SOLE PLATE DOES NOT EXCEED 300°F. TEMPERATURES ABOVE THIS MAY DAMAGE THE ELASTOMER.

AFTER BEARING ASSEMBLY IS IN PLACE AND ANCHOR BOLTS HAVE BEEN FINALLY POSITIONED. THEY SHALL BE GROUTED IN PLACE AS SHOWN.

THE CLOSURE PLATE, GROUT PIPE AND STANDARD PIPE FOR THIS ASSEMBLY NEED NOT BE GALVANIZED.

SOLE PLATES SHOULD BE WELDED TO BEAM FLANGES AND ANCHOR BOLTS SHOULD BE GROUTED BEFORE FALSEWORK IS PLACED.

ALL SURFACES OF BEARING PLATES SHALL BE SMOOTH AND STRAIGHT.

THE CONTRACTOR'S ATTENTION IS CALLED TO THE FOLLOWING PROCEDURE, WHICH MAY BE REQUIRED BY THE ENGINEER, TO RESET ELASTOMERIC BEARINGS DUE TO GIRDER TRANSLATION AND END ROTATION:

1. ONCE THE DECK HAS CURED, THE GIRDERS SHALL BE JACKED THEN THE ANCHOR BOLTS AND ELASTOMERIC BEARING SLOTS CENTERED AS NEARLY AS PRACTICAL ABOUT THE BEARING STIFFENER. THIS OPERATION SHALL BE PERFORMED AT APPROXIMATELY 60° F.
2. AFTER CENTERING THE ELASTOMERIC BEARING SLOTS AND ANCHOR BOLTS, THE ANCHOR BOLTS SHALL BE GROUTED.

THE CONTRACTOR MAY PROPOSE ALTERNATE METHODS, PROVIDED DETAILS ARE SUBMITTED TO THE ENGINEER FOR REVIEW AND APPROVAL.

NO SEPARATE PAYMENT FOR 4" Ø PIPE INSERTS SHALL BE MADE. ALL COSTS FOR THIS ITEM SHALL BE INCLUDED IN THE LUMP SUM PRICE FOR STRUCTURAL STEEL.

FOR STEEL REINFORCED ELASTOMERIC BEARINGS, SEE SPECIAL PROVISIONS.

—LOAD RATINGS—	
	MAX. D.L. + L.L.
TYPE IV	239 K

PROJECT NO. U-2524C

GUILFORD COUNTY

STATION: 332+65.40 -L-

STATE OF NORTH CAROLINA
DEPARTMENT OF TRANSPORTATION
RALEIGH

STANDARD

ELASTOMERIC BEARING DETAILS

(STEEL SUPERSTRUCTURE)

Stantec
Stantec Consulting Services Inc.
801 Jones Franklin Road
Suite 300
Raleigh, NC 27606
Tel. (919) 851-6866
Fax. (919) 851-7024
www.stantec.com
License No. F-0672

NORTH CAROLINA PROFESSIONAL SEAL 13406 ENGINEER JOSEPH T. KELVINGTON

ASSEMBLED BY : JBG	DATE : 04/13		
CHECKED BY : VTD	DATE : 04/13		
DRAWN BY : EEM 10/95	REV. 7/10/01 LES/RDR	DESIGN ENGINEER OF RECORD: J. T. KELVINGTON	DATE : 04-16-13
CHECKED BY : PEK 10/95	REV. 5/1/06 TLA/GM		
	REV. 10/1/11 MAA/GM		

REVISIONS						SHEET NO.
NO.	BY:	DATE:	NO.	BY:	DATE:	S-555
1			3			TOTAL SHEETS
2			4			836

U:\Structures\Y2 Horsepen Creek Rd\Drawing\Final\U-2524C_SD_BG.dgn 6/7/2013 3:11:08 PM jgelle STRUCTURES PEN TABLE.tbl

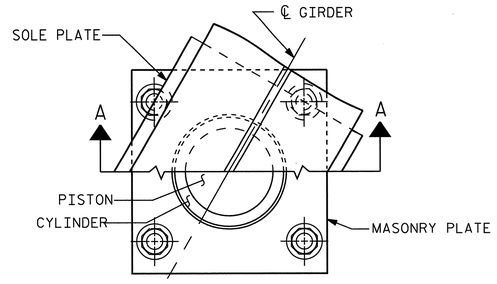

CUT-AWAY PLAN

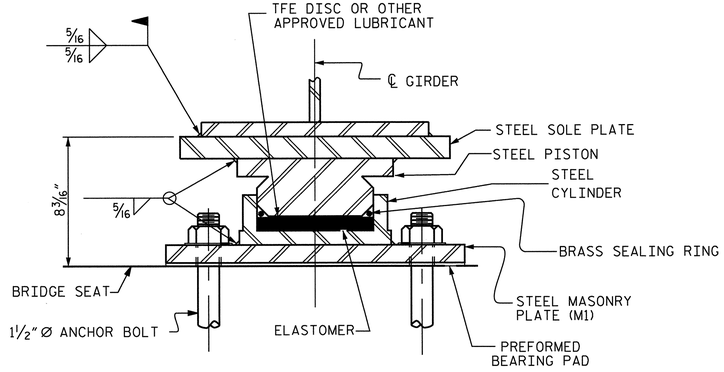

SECTION A-A

PB1, FIXED
(10 REQ'D.)

POT BEARING DETAILS

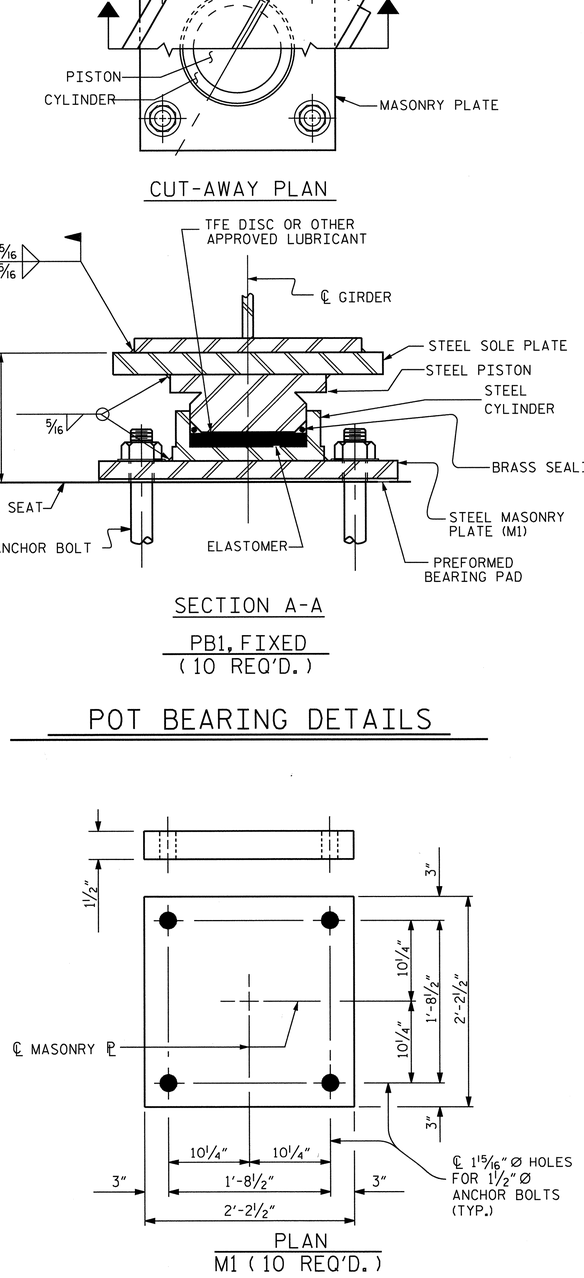

PLAN
M1 (10 REQ'D.)

MASONRY PLATE DETAILS

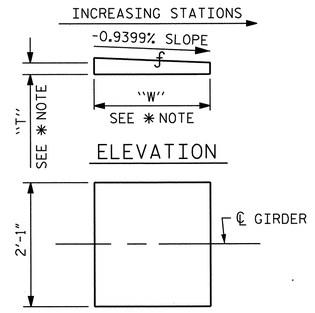

PLAN
P2 (10 REQ'D.)

*NOTE:
DIMENSIONS "W" AND "T" ARE TO BE DETERMINED BY THE MANUFACTURER.

SOLE PLATE DETAILS

NOTES

FOR POT BEARINGS, SEE SPECIAL PROVISIONS.

AT ALL POINTS OF SUPPORT AT BENT 1, NUTS FOR ANCHOR BOLTS SHALL BE TIGHTENED FINGER TIGHT AND GIVEN AN ADDITIONAL 1/4 TURN. THE THREAD OF THE NUT AND BOLT SHALL THEN BE BURRED WITH A SHARP POINTED TOOL.

WHEN WELDING THE SOLE PLATE TO THE GIRDER, USE TEMPERATURE INDICATING WAX PENS, OR OTHER SUITABLE MEANS, TO ENSURE THAT THE TEMPERATURE OF THE BEARING DOES NOT EXCEED 250°F TEMPERATURES ABOVE THIS MAY DAMAGE THE TFE OR ELASTOMER.

SOLE PLATES SHOULD BE WELDED TO BEAM FLANGES BEFORE FALSEWORK IS PLACED.

ALL SURFACES OF BEARING PLATES SHALL BE SMOOTH AND STRAIGHT.

FOR THERMAL SPRAYED COATINGS (METALLIZATION), SEE SPECIAL PROVISIONS.

THE CONTRACTOR MAY SUBSTITUTE DISC BEARINGS FOR THE POT BEARINGS SHOWN. FOR OPTIONAL DISC BEARINGS, SEE SPECIAL PROVISIONS.

SOLE PLATE SHALL BE AASHTO M270 GRADE 50W AND SHALL NOT BE GALVANIZED. ANCHOR BOLTS, NUTS AND WASHERS SHALL BE GALVANIZED IN ACCORDANCE WITH THE STANDARD SPECIFICATIONS.

ALL BEARING PLATES SHALL BE AASHTO M270 GRADE 50.

TABLE FOR LOADS AND MOVEMENT

BEARING	LOCATION	UNFACTORED VERTICAL LOAD (KIPS)				FACTORED LATERAL LOAD (KIPS)	TOTAL MOVEMENT (INCHES)
		DEAD		LIVE	TOTAL		
		DC	DW	LL+IM			
PB1 (FIXED)	BENT 1	389	49	197	635	46	0

PROJECT NO. U-2524C

GUILFORD COUNTY

STATION: 332+65.40 -L-

STATE OF NORTH CAROLINA
DEPARTMENT OF TRANSPORTATION
RALEIGH

STANDARD

POT BEARING DETAILS

Stantec Consulting Services Inc.
801 Jones Franklin Road
Suite 300
Raleigh, NC 27606
Tel. (919) 851-6866
Fax. (919) 851-7024
www.stantec.com
License No. F-0672

ASSEMBLED BY : V. T. DOAN	DATE : 04-10-13
CHECKED BY : S. S. YUEN	DATE : 04-12-13
DRAWN BY : RWW 8/99	REV. 5/7/03 RWW/JTE
CHECKED BY : LES 8/99	REV. 5/1/06R TLA/GM
	REV. 10/1/11 MAA/GM

DESIGN ENGINEER OF RECORD: J. T. KELVINGTON DATE : 04-16-13

NORTH CAROLINA PROFESSIONAL SEAL 13406 ENGINEER JOSEPH T. KELVINGTON 6/13

REVISIONS						SHEET NO.
NO.	BY:	DATE:	NO.	BY:	DATE:	S-556
1			3			TOTAL SHEETS
2			4			836

U:\Structures\Y2 Horsepen Creek Rd\Drawing\Final\U-2524C_SD_BG_2.dgn 6/7/2013 2:53:28 PM Jgeile STRUCTURES PEN TABLE.tbl Raleigh PDF Creator (Full).plt

SPAN A   SPAN B

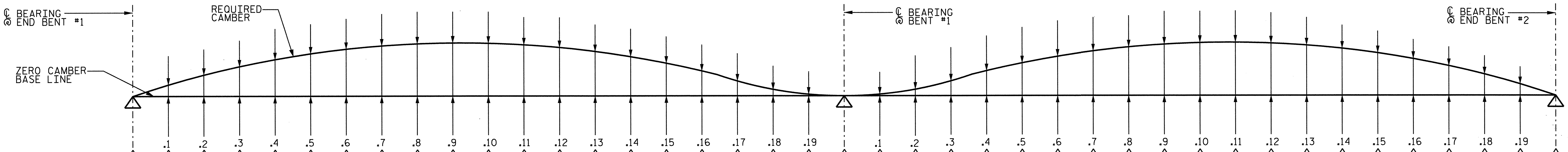

GIRDER 1

Span A

		.1	.2	.3	.4	.5	.6	.7	.8	.9	.10	.11	.12	.13	.14	.15	.16	.17	.18	.19
DEFLEC. DUE TO WEIGHT OF STEEL	0.000	-0.010	-0.020	-0.029	-0.036	-0.041	-0.045	-0.047	-0.048	-0.046	-0.043	-0.039	-0.033	-0.026	-0.020	-0.013	-0.007	-0.002	0.001	0.002
DEFLEC. DUE TO WEIGHT OF SLAB **	0.000	-0.046	-0.088	-0.128	-0.160	-0.186	-0.205	-0.216	-0.220	-0.215	-0.204	-0.185	-0.162	-0.131	-0.101	-0.069	-0.042	-0.018	-0.003	0.003
DEFLEC. DUE TO WEIGHT OF RAIL	0.000	-0.005	-0.009	-0.013	-0.017	-0.019	-0.021	-0.022	-0.022	-0.022	-0.020	-0.018	-0.016	-0.013	-0.010	-0.006	-0.004	-0.001	0.000	0.001
TOTAL DEAD LOAD DEFLECTION	0.000	-0.061	-0.117	-0.170	-0.213	-0.246	-0.271	-0.285	-0.290	-0.283	-0.267	-0.242	-0.211	-0.170	-0.131	-0.088	-0.053	-0.021	-0.002	0.006
VERTICAL CURVE ORDINATE	0.000	0.000	0.000	0.000	0.000	0.000	0.000	0.000	0.000	0.000	0.000	0.000	0.000	0.000	0.000	0.000	0.000	0.000	0.000	0.000
SUPERELEVATION ORDINATE	0.000	0.000	0.000	0.000	0.000	0.000	0.000	0.000	0.000	0.000	0.000	0.000	0.000	0.000	0.000	0.000	0.000	0.000	0.000	0.000
REQUIRED CAMBER	+0"	+0 3/4"	+1 3/8"	+2 1/16"	+2 9/16"	+2 15/16"	+3 1/4"	+3 7/16"	+3 1/2"	+3 3/8"	+3 3/16"	+2 7/8"	+2 9/16"	+2 1/16"	+1 9/16"	+1 1/16"	+0 5/8"	+0 1/4"	+0"	-0 1/16"

Span B

		.1	.2	.3	.4	.5	.6	.7	.8	.9	.10	.11	.12	.13	.14	.15	.16	.17	.18	.19	
DEFLEC. DUE TO WEIGHT OF STEEL	0.000	-0.005	-0.013	-0.023	-0.035	-0.047	-0.061	-0.072	-0.083	-0.091	-0.096	-0.099	-0.099	-0.096	-0.090	-0.081	-0.069	-0.055	-0.038	-0.020	0.000
DEFLEC. DUE TO WEIGHT OF SLAB **	0.000	-0.016	-0.042	-0.078	-0.123	-0.169	-0.219	-0.263	-0.303	-0.334	-0.356	-0.367	-0.368	-0.357	-0.335	-0.302	-0.258	-0.204	-0.141	-0.073	0.000
DEFLEC. DUE TO WEIGHT OF RAIL	0.000	-0.002	-0.006	-0.011	-0.016	-0.022	-0.028	-0.033	-0.038	-0.042	-0.044	-0.045	-0.045	-0.044	-0.041	-0.037	-0.031	-0.025	-0.017	-0.009	0.000
TOTAL DEAD LOAD DEFLECTION	0.000	-0.023	-0.061	-0.112	-0.174	-0.238	-0.308	-0.368	-0.424	-0.467	-0.496	-0.511	-0.512	-0.497	-0.466	-0.420	-0.358	-0.284	-0.196	-0.102	0.000
VERTICAL CURVE ORDINATE	0.000	0.000	0.000	0.000	0.000	0.000	0.000	0.000	0.000	0.000	0.000	0.000	0.000	0.000	0.000	0.000	0.000	0.000	0.000	0.000	0.000
SUPERELEVATION ORDINATE	0.000	0.000	0.000	0.000	0.000	0.000	0.000	0.000	0.000	0.000	0.000	0.000	0.000	0.000	0.000	0.000	0.000	0.000	0.000	0.000	0.000
REQUIRED CAMBER	+0"	+0 1/4"	+0 3/4"	+1 3/8"	+2 1/16"	+2 7/8"	+3 11/16"	+4 7/16"	+5 1/16"	+5 5/8"	+5 15/16"	+6 1/8"	+6 1/8"	+5 15/16"	+5 9/16"	+5 1/16"	+4 5/16"	+3 7/16"	+2 3/8"	+1 1/4"	+0"

GIRDERS 2-4

Span A

		.1	.2	.3	.4	.5	.6	.7	.8	.9	.10	.11	.12	.13	.14	.15	.16	.17	.18	.19
DEFLEC. DUE TO WEIGHT OF STEEL	0.000	-0.014	-0.026	-0.037	-0.047	-0.054	-0.059	-0.062	-0.062	-0.060	-0.057	-0.051	-0.044	-0.035	-0.026	-0.017	-0.010	-0.003	0.001	0.002
DEFLEC. DUE TO WEIGHT OF SLAB **	0.000	-0.051	-0.098	-0.142	-0.179	-0.208	-0.229	-0.241	-0.246	-0.241	-0.229	-0.209	-0.183	-0.149	-0.115	-0.080	-0.050	-0.022	-0.005	0.003
DEFLEC. DUE TO WEIGHT OF RAIL	0.000	-0.005	-0.009	-0.013	-0.016	-0.018	-0.020	-0.021	-0.022	-0.021	-0.020	-0.019	-0.017	-0.014	-0.011	-0.008	-0.005	-0.003	-0.001	0.000
TOTAL DEAD LOAD DEFLECTION	0.000	-0.070	-0.133	-0.192	-0.242	-0.280	-0.308	-0.324	-0.330	-0.322	-0.306	-0.279	-0.244	-0.198	-0.152	-0.105	-0.065	-0.028	-0.005	0.005
VERTICAL CURVE ORDINATE	0.000	0.000	0.000	0.000	0.000	0.000	0.000	0.000	0.000	0.000	0.000	0.000	0.000	0.000	0.000	0.000	0.000	0.000	0.000	0.000
SUPERELEVATION ORDINATE	0.000	0.000	0.000	0.000	0.000	0.000	0.000	0.000	0.000	0.000	0.000	0.000	0.000	0.000	0.000	0.000	0.000	0.000	0.000	0.000
REQUIRED CAMBER	+0"	+0 13/16"	+1 5/8"	+2 5/16"	+2 7/8"	+3 3/8"	+3 11/16"	+3 7/8"	+3 15/16"	+3 7/8"	+3 11/16"	+3 3/8"	+2 15/16"	+2 3/8"	+1 13/16"	+1 1/4"	+0 3/4"	+0 5/16"	+0 1/16"	-0 1/16"

Span B

		.1	.2	.3	.4	.5	.6	.7	.8	.9	.10	.11	.12	.13	.14	.15	.16	.17	.18	.19	
DEFLEC. DUE TO WEIGHT OF STEEL	0.000	-0.006	-0.016	-0.029	-0.045	-0.061	-0.078	-0.092	-0.106	-0.116	-0.124	-0.127	-0.127	-0.123	-0.115	-0.104	-0.088	-0.070	-0.048	-0.025	0.000
DEFLEC. DUE TO WEIGHT OF SLAB **	0.000	-0.016	-0.043	-0.081	-0.129	-0.178	-0.231	-0.278	-0.322	-0.354	-0.378	-0.391	-0.392	-0.380	-0.357	-0.322	-0.275	-0.218	-0.150	-0.078	0.000
DEFLEC. DUE TO WEIGHT OF RAIL	0.000	-0.001	-0.004	-0.007	-0.011	-0.015	-0.019	-0.023	-0.027	-0.030	-0.032	-0.033	-0.033	-0.032	-0.030	-0.027	-0.023	-0.019	-0.013	-0.007	0.000
TOTAL DEAD LOAD DEFLECTION	0.000	-0.023	-0.063	-0.117	-0.185	-0.254	-0.328	-0.393	-0.455	-0.500	-0.534	-0.551	-0.552	-0.535	-0.502	-0.453	-0.386	-0.307	-0.211	-0.110	0.000
VERTICAL CURVE ORDINATE	0.000	0.000	0.000	0.000	0.000	0.000	0.000	0.000	0.000	0.000	0.000	0.000	0.000	0.000	0.000	0.000	0.000	0.000	0.000	0.000	0.000
SUPERELEVATION ORDINATE	0.000	0.000	0.000	0.000	0.000	0.000	0.000	0.000	0.000	0.000	0.000	0.000	0.000	0.000	0.000	0.000	0.000	0.000	0.000	0.000	0.000
REQUIRED CAMBER	+0"	+0 1/4"	+0 3/4"	+1 3/8"	+2 1/4"	+3 1/16"	+3 15/16"	+4 11/16"	+5 7/16"	+6"	+6 7/16"	+6 5/8"	+6 5/8"	+6 7/16"	+6"	+5 7/16"	+4 5/8"	+3 11/16"	+2 9/16"	+1 5/16"	+0"

GIRDER 5

Span A

		.1	.2	.3	.4	.5	.6	.7	.8	.9	.10	.11	.12	.13	.14	.15	.16	.17	.18	.19
DEFLEC. DUE TO WEIGHT OF STEEL	0.000	-0.010	-0.020	-0.029	-0.036	-0.041	-0.045	-0.047	-0.048	-0.046	-0.043	-0.039	-0.033	-0.027	-0.020	-0.013	-0.007	-0.002	0.001	0.002
DEFLEC. DUE TO WEIGHT OF SLAB **	0.000	-0.043	-0.082	-0.118	-0.149	-0.173	-0.191	-0.202	-0.205	-0.202	-0.192	-0.175	-0.153	-0.125	-0.097	-0.067	-0.042	-0.019	-0.004	0.002
DEFLEC. DUE TO WEIGHT OF RAIL	0.000	-0.004	-0.007	-0.010	-0.012	-0.014	-0.016	-0.017	-0.017	-0.017	-0.016	-0.015	-0.013	-0.011	-0.009	-0.007	-0.005	-0.003	-0.002	-0.001
TOTAL DEAD LOAD DEFLECTION	0.000	-0.057	-0.109	-0.157	-0.197	-0.228	-0.252	-0.266	-0.270	-0.265	-0.251	-0.229	-0.199	-0.163	-0.126	-0.087	-0.054	-0.024	-0.005	0.003
VERTICAL CURVE ORDINATE	0.000	0.000	0.000	0.000	0.000	0.000	0.000	0.000	0.000	0.000	0.000	0.000	0.000	0.000	0.000	0.000	0.000	0.000	0.000	0.000
SUPERELEVATION ORDINATE	0.000	0.000	0.000	0.000	0.000	0.000	0.000	0.000	0.000	0.000	0.000	0.000	0.000	0.000	0.000	0.000	0.000	0.000	0.000	0.000
REQUIRED CAMBER	+0"	+0 11/16"	+1 5/16"	+1 7/8"	+2 3/8"	+2 3/4"	+3"	+3 3/16"	+3 1/4"	+3 3/16"	+3"	+2 3/4"	+2 3/8"	+1 15/16"	+1 1/2"	+1 1/16"	+0 5/8"	+0 5/16"	+0 1/16"	-0 1/16"

Span B

		.1	.2	.3	.4	.5	.6	.7	.8	.9	.10	.11	.12	.13	.14	.15	.16	.17	.18	.19	
DEFLEC. DUE TO WEIGHT OF STEEL	0.000	-0.005	-0.012	-0.022	-0.035	-0.047	-0.060	-0.072	-0.083	-0.090	-0.096	-0.099	-0.099	-0.096	-0.089	-0.080	-0.069	-0.054	-0.037	-0.019	0.000
DEFLEC. DUE TO WEIGHT OF SLAB **	0.000	-0.013	-0.036	-0.067	-0.108	-0.149	-0.193	-0.232	-0.269	-0.296	-0.316	-0.326	-0.327	-0.318	-0.298	-0.268	-0.229	-0.182	-0.125	-0.065	0.000
DEFLEC. DUE TO WEIGHT OF RAIL	0.000	0.000	-0.001	-0.002	-0.003	-0.005	-0.007	-0.008	-0.010	-0.011	-0.012	-0.013	-0.013	-0.013	-0.012	-0.011	-0.009	-0.008	-0.005	-0.003	0.000
TOTAL DEAD LOAD DEFLECTION	0.000	-0.018	-0.049	-0.091	-0.146	-0.201	-0.260	-0.312	-0.362	-0.397	-0.424	-0.438	-0.439	-0.427	-0.399	-0.359	-0.307	-0.244	-0.167	-0.087	0.000
VERTICAL CURVE ORDINATE	0.000	0.000	0.000	0.000	0.000	0.000	0.000	0.000	0.000	0.000	0.000	0.000	0.000	0.000	0.000	0.000	0.000	0.000	0.000	0.000	0.000
SUPERELEVATION ORDINATE	0.000	0.000	0.000	0.000	0.000	0.000	0.000	0.000	0.000	0.000	0.000	0.000	0.000	0.000	0.000	0.000	0.000	0.000	0.000	0.000	0.000
REQUIRED CAMBER	+0"	+0 3/16"	+0 9/16"	+1 1/16"	+1 3/4"	+2 7/16"	+3 1/8"	+3 3/4"	+4 3/8"	+4 3/4"	+5 1/16"	+5 1/4"	+5 1/4"	+5 1/8"	+4 13/16"	+4 5/16"	+3 11/16"	+2 15/16"	+2"	+1 1/16"	+0"

** INCLUDES SLAB, BUILDUP, AND STAY-IN-PLACE FORMS

SCHEMATIC CAMBER ORDINATES SPAN A-B

NOTES:

ALL VALUES ARE SHOWN IN FEET (DECIMAL FORM), EXCEPT "FINAL CAMBER", WHICH IS GIVEN IN INCHES (FRACTION FORM).

NEGATIVE DEFLECTION ORDINATES DENOTE DOWNWARD DISPLACEMENT DUE TO LOAD.

POSITIVE CAMBER DENOTES REQUIRED GIRDER ORDINATE ABOVE THE ZERO CAMBER BASE LINE.

NEGATIVE CAMBER DENOTES REQUIRED GIRDER ORDINATE BELOW THE ZERO CAMBER BASE LINE.

PROJECT NO. U-2524C

GUILFORD COUNTY

STATION: 332+65.40 -L-

SHEET 1 of 2

STATE OF NORTH CAROLINA
DEPARTMENT OF TRANSPORTATION
RALEIGH

SUPERSTRUCTURE

DEAD LOAD DEFLECTIONS

NORTH CAROLINA PROFESSIONAL SEAL 13406 ENGINEER JOSEPH T. KELVINGTON

REVISIONS						SHEET NO.
NO.	BY:	DATE:	NO.	BY:	DATE:	S-557
1			3			TOTAL SHEETS
2			4			836

Stantec
Stantec Consulting Services Inc.
801 Jones Franklin Road
Suite 300
Raleigh, NC 27606
Tel. (919) 851-6866
Fax. (919) 851-7024
www.stantec.com
License No. F-0672

DRAWN BY : J. B. GEILE DATE : 04-11-13
CHECKED BY : J. T. KELVINGTON DATE : 04-11-13
DESIGN ENGINEER OF RECORD: J. T. KELVINGTON DATE : 04-16-13

U:\Structures\Y2 Horsepen Creek Rd\Drawing\Final\U-2524C_SD_DL_1.dgn 6/7/2013 2:53:30 PM jgeile

SPAN A

SPAN B

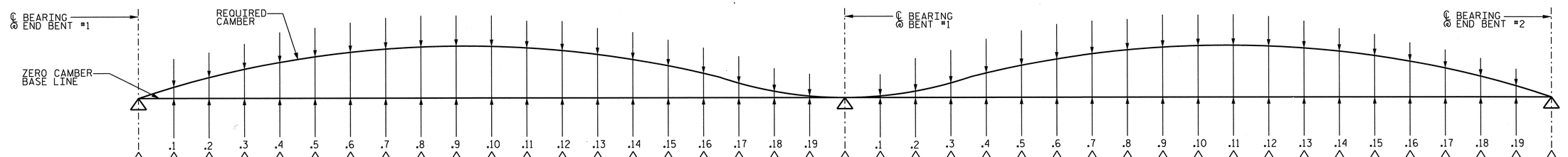

GIRDER 6

DEFLEC. DUE TO WEIGHT OF STEEL	0.000	-0.010	-0.020	-0.029	-0.036	-0.041	-0.045	-0.047	-0.048	-0.046	-0.043	-0.039	-0.033	-0.026	-0.020	-0.013	-0.007	-0.002	0.001	0.002	0.000	-0.005	-0.012	-0.022	-0.035	-0.047	-0.060	-0.072	-0.083	-0.091	-0.097	-0.100	-0.100	-0.097	-0.091	-0.082	-0.070	-0.055	-0.038	-0.020	0.000
DEFLEC. DUE TO WEIGHT OF SLAB **	0.000	-0.034	-0.065	-0.094	-0.118	-0.137	-0.151	-0.159	-0.161	-0.158	-0.149	-0.135	-0.118	-0.095	-0.073	-0.049	-0.030	-0.012	-0.001	0.003	0.000	-0.012	-0.032	-0.060	-0.094	-0.129	-0.167	-0.201	-0.232	-0.256	-0.273	-0.282	-0.283	-0.275	-0.259	-0.233	-0.199	-0.158	-0.109	-0.057	0.000
DEFLEC. DUE TO WEIGHT OF RAIL	0.000	-0.002	-0.004	-0.006	-0.007	-0.008	-0.009	-0.009	-0.009	-0.009	-0.009	-0.008	-0.007	-0.006	-0.005	-0.004	-0.003	-0.002	-0.001	0.000	0.000	0.000	0.000	-0.001	-0.002	-0.003	-0.004	-0.005	-0.006	-0.007	-0.008	-0.008	-0.009	-0.008	-0.008	-0.007	-0.006	-0.005	-0.004	-0.002	0.000
TOTAL DEAD LOAD DEFLECTION	0.000	-0.046	-0.089	-0.129	-0.161	-0.186	-0.205	-0.215	-0.218	-0.213	-0.201	-0.182	-0.158	-0.127	-0.098	-0.066	-0.040	-0.016	-0.001	0.005	0.000	-0.017	-0.044	-0.083	-0.131	-0.179	-0.231	-0.278	-0.321	-0.354	-0.378	-0.390	-0.392	-0.380	-0.358	-0.322	-0.275	-0.218	-0.151	-0.079	0.000
VERTICAL CURVE ORDINATE	0.000	0.000	0.000	0.000	0.000	0.000	0.000	0.000	0.000	0.000	0.000	0.000	0.000	0.000	0.000	0.000	0.000	0.000	0.000	0.000	0.000	0.000	0.000	0.000	0.000	0.000	0.000	0.000	0.000	0.000	0.000	0.000	0.000	0.000	0.000	0.000	0.000	0.000	0.000	0.000	0.000
SUPERELEVATION ORDINATE	0.000	0.000	0.000	0.000	0.000	0.000	0.000	0.000	0.000	0.000	0.000	0.000	0.000	0.000	0.000	0.000	0.000	0.000	0.000	0.000	0.000	0.000	0.000	0.000	0.000	0.000	0.000	0.000	0.000	0.000	0.000	0.000	0.000	0.000	0.000	0.000	0.000	0.000	0.000	0.000	0.000
REQUIRED CAMBER	+0"	+0 9/16"	+1 1/16"	+1 9/16"	+1 15/16"	+2 1/4"	+2 7/16"	+2 9/16"	+2 5/8"	+2 9/16"	+2 7/16"	+2 3/16"	+1 7/8"	+1 1/2"	+1 3/16"	+0 13/16"	+0 1/2"	+0 3/16"	+0"	-0 1/16"	+0"	+0 3/16"	+0 1/2"	+0 0/0"	+1 9/16"	+2 1/8"	+2 3/4"	+3 5/16"	+3 7/8"	+4 1/4"	+4 9/16"	+4 11/16"	+4 11/16"	+4 9/16"	+4 5/16"	+3 7/8"	+3 5/16"	+2 5/8"	+1 13/16"	+0 15/16"	+0"

GIRDERS 7-9

DEFLEC. DUE TO WEIGHT OF STEEL	0.000	-0.013	-0.026	-0.037	-0.046	-0.053	-0.058	-0.061	-0.062	-0.060	-0.056	-0.050	-0.043	-0.035	-0.026	-0.017	-0.010	-0.003	0.001	0.002	0.000	-0.006	-0.015	-0.028	-0.044	-0.059	-0.076	-0.091	-0.105	-0.115	-0.122	-0.126	-0.126	-0.122	-0.115	-0.103	-0.088	-0.070	-0.048	-0.025	0.000
DEFLEC. DUE TO WEIGHT OF SLAB **	0.000	-0.048	-0.091	-0.132	-0.166	-0.194	-0.214	-0.227	-0.231	-0.228	-0.218	-0.201	-0.178	-0.147	-0.116	-0.082	-0.053	-0.027	-0.009	0.000	0.000	-0.012	-0.035	-0.068	-0.111	-0.155	-0.203	-0.245	-0.286	-0.316	-0.339	-0.351	-0.353	-0.344	-0.323	-0.292	-0.250	-0.198	-0.137	-0.071	0.000
DEFLEC. DUE TO WEIGHT OF RAIL	0.000	-0.005	-0.010	-0.014	-0.018	-0.021	-0.023	-0.024	-0.024	-0.024	-0.022	-0.020	-0.017	-0.014	-0.011	-0.007	-0.004	-0.002	0.000	0.001	0.000	-0.002	-0.006	-0.010	-0.016	-0.022	-0.028	-0.034	-0.039	-0.043	-0.045	-0.047	-0.047	-0.045	-0.042	-0.038	-0.032	-0.026	-0.018	-0.009	0.000
TOTAL DEAD LOAD DEFLECTION	0.000	-0.066	-0.127	-0.183	-0.230	-0.268	-0.295	-0.312	-0.317	-0.312	-0.296	-0.271	-0.238	-0.196	-0.153	-0.106	-0.067	-0.032	-0.008	0.003	0.000	-0.020	-0.056	-0.106	-0.171	-0.236	-0.307	-0.370	-0.430	-0.474	-0.506	-0.524	-0.526	-0.511	-0.480	-0.433	-0.370	-0.294	-0.203	-0.105	0.000
VERTICAL CURVE ORDINATE	0.000	0.000	0.000	0.000	0.000	0.000	0.000	0.000	0.000	0.000	0.000	0.000	0.000	0.000	0.000	0.000	0.000	0.000	0.000	0.000	0.000	0.000	0.000	0.000	0.000	0.000	0.000	0.000	0.000	0.000	0.000	0.000	0.000	0.000	0.000	0.000	0.000	0.000	0.000	0.000	0.000
SUPERELEVATION ORDINATE	0.000	0.000	0.000	0.000	0.000	0.000	0.000	0.000	0.000	0.000	0.000	0.000	0.000	0.000	0.000	0.000	0.000	0.000	0.000	0.000	0.000	0.000	0.000	0.000	0.000	0.000	0.000	0.000	0.000	0.000	0.000	0.000	0.000	0.000	0.000	0.000	0.000	0.000	0.000	0.000	0.000
REQUIRED CAMBER	+0"	+0 13/16"	+1 1/2"	+2 3/16"	+2 3/4"	+3 3/16"	+3 9/16"	+3 3/4"	+3 13/16"	+3 3/4"	+3 9/16"	+3 1/4"	+2 7/8"	+2 3/8"	+1 13/16"	+1 1/4"	+0 13/16"	+0 3/8"	+0 1/8"	-0 1/16"	+0"	+0 1/4"	+0 11/16"	+1 1/4"	+2 1/16"	+2 13/16"	+3 11/16"	+4 7/16"	+5 3/16"	+5 11/16"	+6 1/16"	+6 5/16"	+6 5/16"	+6 1/8"	+5 3/4"	+5 3/16"	+4 7/16"	+3 1/2"	+2 7/16"	+1 1/4"	+0"

GIRDER 10

DEFLEC. DUE TO WEIGHT OF STEEL	0.000	-0.010	-0.020	-0.028	-0.036	-0.041	-0.045	-0.047	-0.048	-0.046	-0.043	-0.039	-0.033	-0.027	-0.020	-0.013	-0.007	-0.002	0.001	0.002	0.000	-0.005	-0.012	-0.022	-0.035	-0.047	-0.060	-0.072	-0.083	-0.091	-0.097	-0.100	-0.100	-0.097	-0.090	-0.081	-0.069	-0.055	-0.038	-0.020	0.000
DEFLEC. DUE TO WEIGHT OF SLAB **	0.000	-0.042	-0.080	-0.116	-0.146	-0.170	-0.188	-0.199	-0.203	-0.201	-0.192	-0.176	-0.156	-0.130	-0.103	-0.073	-0.047	-0.024	-0.008	0.000	0.000	-0.011	-0.030	-0.059	-0.097	-0.135	-0.177	-0.214	-0.250	-0.277	-0.297	-0.307	-0.309	-0.301	-0.283	-0.255	-0.218	-0.173	-0.119	-0.062	0.000
DEFLEC. DUE TO WEIGHT OF RAIL	0.000	-0.006	-0.011	-0.016	-0.020	-0.023	-0.025	-0.027	-0.027	-0.026	-0.025	-0.022	-0.020	-0.016	-0.012	-0.008	-0.005	-0.002	0.000	0.001	0.000	-0.003	-0.006	-0.012	-0.018	-0.025	-0.032	-0.038	-0.044	-0.049	-0.052	-0.054	-0.054	-0.052	-0.049	-0.044	-0.038	-0.030	-0.021	-0.011	0.000
TOTAL DEAD LOAD DEFLECTION	0.000	-0.058	-0.111	-0.160	-0.202	-0.234	-0.258	-0.273	-0.278	-0.273	-0.260	-0.237	-0.209	-0.173	-0.135	-0.094	-0.059	-0.028	-0.007	0.003	0.000	-0.019	-0.048	-0.093	-0.150	-0.207	-0.269	-0.324	-0.377	-0.417	-0.446	-0.461	-0.463	-0.450	-0.422	-0.380	-0.325	-0.258	-0.178	-0.093	0.000
VERTICAL CURVE ORDINATE	0.000	0.000	0.000	0.000	0.000	0.000	0.000	0.000	0.000	0.000	0.000	0.000	0.000	0.000	0.000	0.000	0.000	0.000	0.000	0.000	0.000	0.000	0.000	0.000	0.000	0.000	0.000	0.000	0.000	0.000	0.000	0.000	0.000	0.000	0.000	0.000	0.000	0.000	0.000	0.000	0.000
SUPERELEVATION ORDINATE	0.000	0.000	0.000	0.000	0.000	0.000	0.000	0.000	0.000	0.000	0.000	0.000	0.000	0.000	0.000	0.000	0.000	0.000	0.000	0.000	0.000	0.000	0.000	0.000	0.000	0.000	0.000	0.000	0.000	0.000	0.000	0.000	0.000	0.000	0.000	0.000	0.000	0.000	0.000	0.000	0.000
REQUIRED CAMBER	+0"	+0 11/16"	+1 5/16"	+1 15/16"	+2 7/16"	+2 13/16"	+3 1/8"	+3 1/4"	+3 5/16"	+3 1/4"	+3 1/8"	+2 7/8"	+2 1/2"	+2 1/16"	+1 5/8"	+1 1/8"	+0 11/16"	+0 5/16"	+0 1/16"	-0 1/16"	+0"	+0 1/4"	+0 9/16"	+1 1/8"	+1 13/16"	+2 1/2"	+3 1/4"	+3 7/8"	+4 1/2"	+5"	+5 3/8"	+5 9/16"	+5 9/16"	+5 3/8"	+5 1/16"	+4 9/16"	+3 7/8"	+3 1/8"	+2 1/8"	+1 1/8"	+0"

** INCLUDES SLAB, BUILDUP, AND STAY-IN-PLACE FORMS

SCHEMATIC CAMBER ORDINATES SPAN A-B

FOR NOTES SEE SHEET 1 OF 2

PROJECT NO. U-2524C

GUILFORD COUNTY

STATION: 332+65.40 -L-

SHEET 2 of 2

STATE OF NORTH CAROLINA
DEPARTMENT OF TRANSPORTATION
RALEIGH

SUPERSTRUCTURE

DEAD LOAD DEFLECTIONS

REVISIONS						SHEET NO.
NO.	BY:	DATE:	NO.	BY:	DATE:	S-558
1			3			TOTAL SHEETS
2			4			836

Stantec
Stantec Consulting Services Inc.
801 Jones Franklin Road
Suite 300
Raleigh, NC 27606
Tel. (919) 851-6866
Fax. (919) 851-7024
www.stantec.com
License No. F-0672

DRAWN BY : J. B. GEILE DATE : 04-11-13
CHECKED BY : J. T. KELVINGTON DATE : 04-11-13

DESIGN ENGINEER OF RECORD: J. T. KELVINGTON DATE : 04-16-13

NORTH CAROLINA PROFESSIONAL SEAL 13406 ENGINEER JOSEPH T. KELVINGTON

U:\Structures\V2 Horsepen Creek Rd\Drawing\Final\U-2524C_SD_DL_2.dgn 6/7/2013 2:53:37 PM jgeile

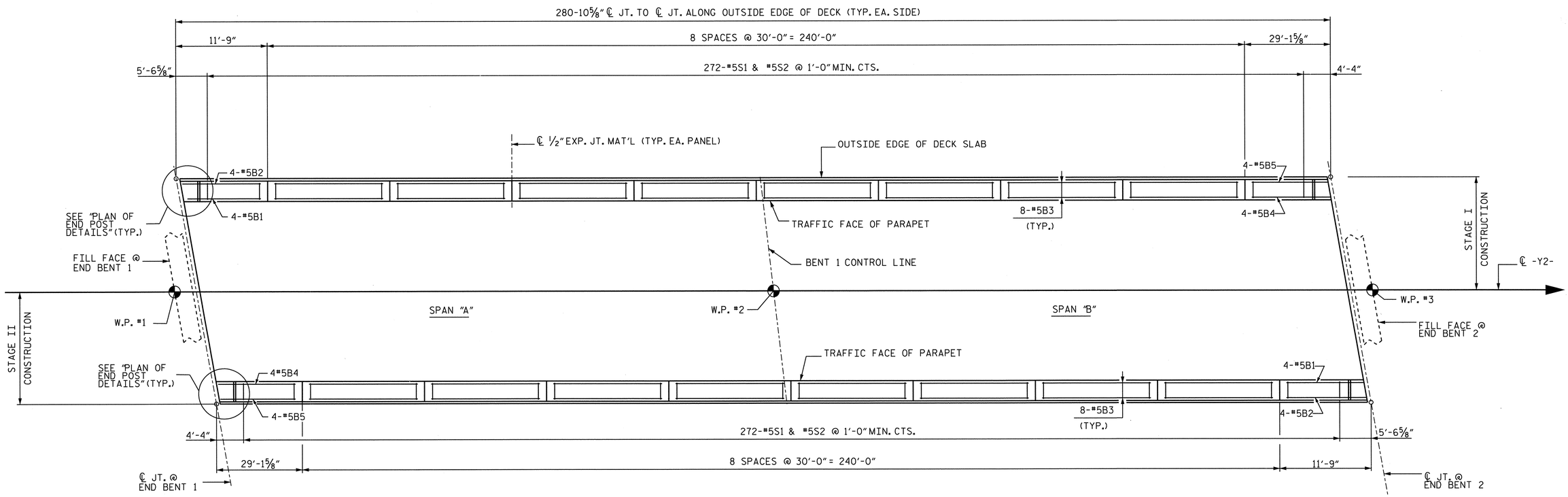

PARAPET PLAN

NOTE: SIDEWALKS ARE NOT SHOWN FOR CLARITY

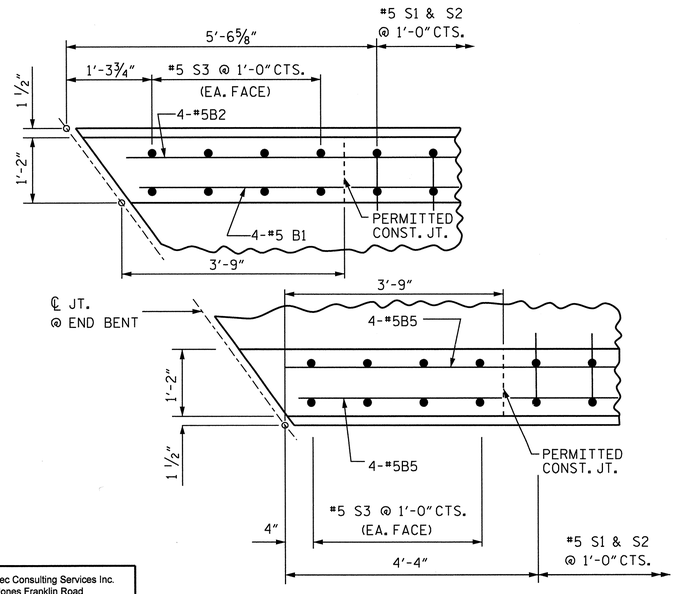

PLAN OF PARAPET

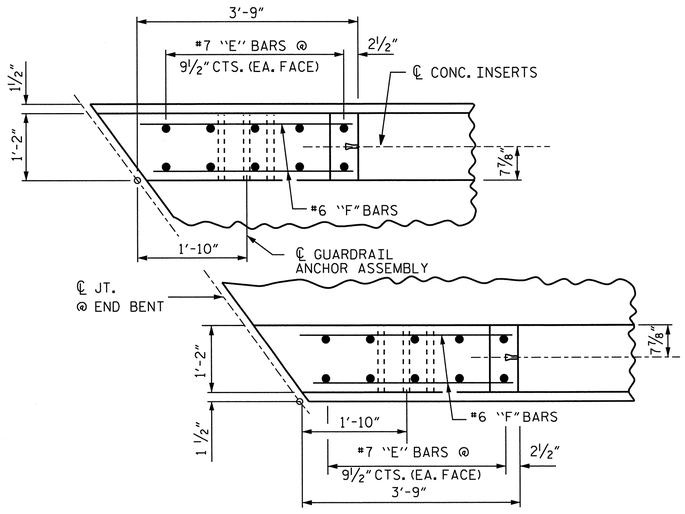

PLAN OF END POST

PARAPET AND END POST FOR TWO BAR RAIL

(END BENT 1 SHOWN, END BENT 2 SIMILAR)

Stantec Consulting Services Inc.
801 Jones Franklin Road
Suite 300
Raleigh, NC 27606
Tel. (919) 851-6866
Fax. (919) 851-7024
www.stantec.com
License No. F-0672

DRAWN BY : J. B. GEILE DATE : 04-11-13
CHECKED BY : T. R. DUDECK DATE : 04-11-13
DESIGN ENGINEER OF RECORD: J. T. KELVINGTON DATE : 04-16-13

NORTH CAROLINA PROFESSIONAL SEAL 13406 ENGINEER JOSEPH T. KELVINGTON 4/16/13

PROJECT NO. U-2524C
GUILFORD COUNTY
STATION: 332+65.40 -L-

SHEET 1 of 2

STATE OF NORTH CAROLINA
DEPARTMENT OF TRANSPORTATION
RALEIGH

CONCRETE
PARAPET AND END POST

REVISIONS						SHEET NO.
NO.	BY:	DATE:	NO.	BY:	DATE:	S-559
1			3			TOTAL SHEETS
2			4			836

U:\Structures\Y2 Horsepen Creek Rd\Drawing\Final\U-2524C_SD_GRA DET.dgn 6/7/2013 2:53:44 PM jgeile

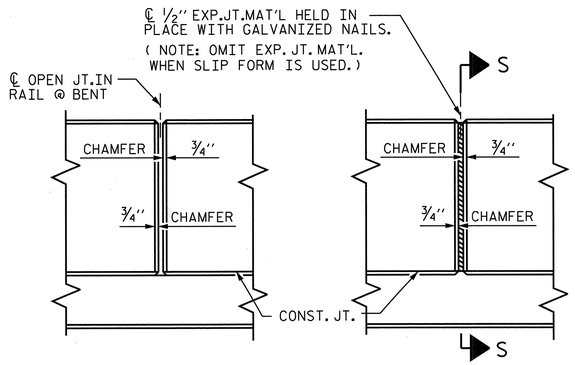

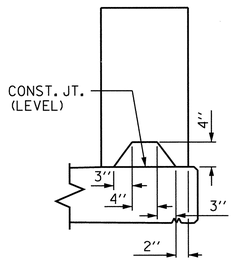

SECTION S-S
AT DAM IN OPEN JOINT
(THIS IS TO BE USED ONLY WHEN SLIP FORM IS USED)

BARRIER RAIL DETAILS

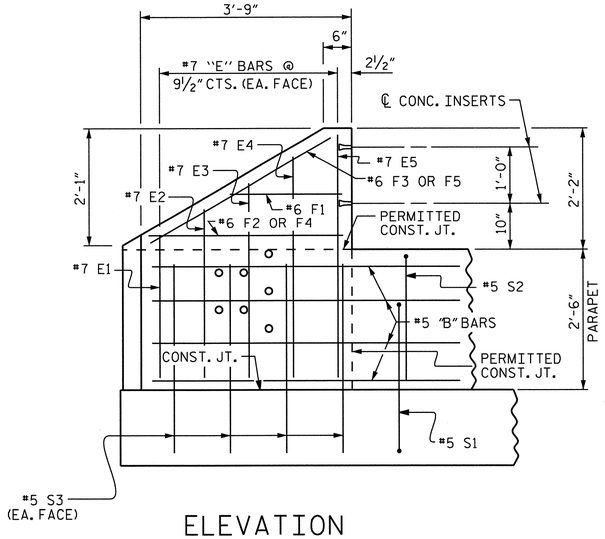

ELEVATION

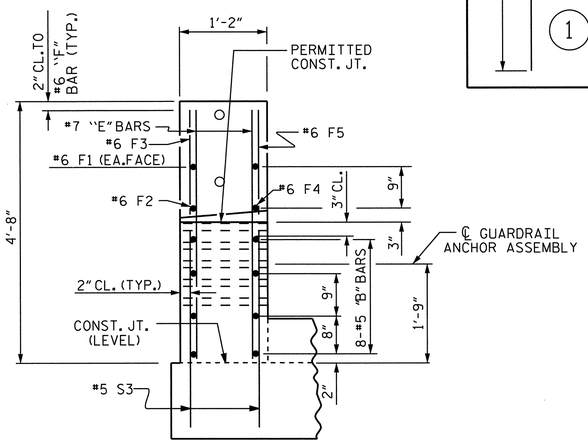

END VIEW

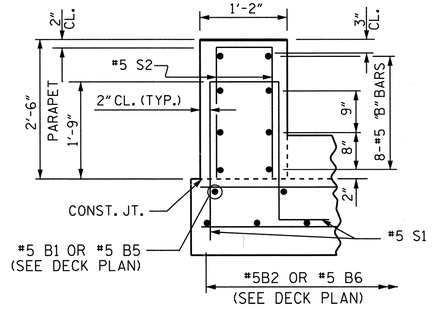

SECTION THRU PARAPET @ SIDEWALK

NOTES

THE PARAPET IN THE CONTINUOUS UNIT SHALL NOT BE CAST UNTIL ALL SLAB CONCRETE IN THE UNIT HAS BEEN CAST AND HAS REACHED A MINIMUM COMPRESSIVE STRENGTH OF 3,000 PSI.

ALL REINFORCING STEEL IN CONCRETE PARAPET SHALL BE EPOXY COATED.

GROOVED CONTRACTION JOINTS, ½" IN DEPTH, SHALL BE TOOLED IN ALL EXPOSED FACES OF THE BARRIER RAIL AND IN ACCORDANCE WITH ARTICLE 825-10(B) OF THE STANDARD SPECIFICATIONS. THE CONTRACTION JOINT SHALL BE LOCATED AT EACH THIRD POINT BETWEEN BARRIER RAIL EXPANSION JOINTS. ONLY ONE CONTRACTION JOINT IS REQUIRED AT MIDPOINT OF BARRIER RAIL SEGMENTS LESS THAN 20 FEET IN LENGTH AND NO CONTRACTION JOINTS ARE REQUIRED FOR THOSE SEGMENTS LESS THAN 10 FEET IN LENGTH.

THE #5S3 BARS SHALL BE INSTALLED USING AN ADHESIVE ANCHORING SYSTEM AFTER SAWING THE JOINT. THE YIELD LOAD FOR THE #5S3 BARS IS 18.6 KIPS. FIELD TESTING FOR THE ADHESIVE BONDING SYSTEM IS NOT REQUIRED.

JOINT OPENINGS SHALL BE SAWED BEFORE END POSTS ARE CONSTRUCTED.

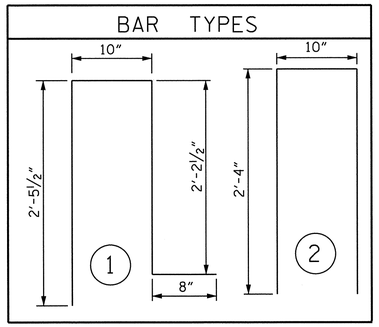

BILL OF MATERIAL
STAGE I CONST.
LEFT PARAPET AND TWO END POSTS

BAR	NO.	SIZE	TYPE	LENGTH	WEIGHT
✱B1	4	#5	STR	10'-7"	44
✱B2	4	#5	STR	11'-1"	46
✱B3	64	#5	STR	29'-7"	1975
✱B4	4	#5	STR	27'-11"	116
✱B5	4	#5	STR	28'-6"	119
✱E1	4	#7	STR	2'-6"	20
✱E2	4	#7	STR	3'-4"	27
✱E3	4	#7	STR	3'-6"	29
✱E4	4	#7	STR	4'-0"	33
✱E5	4	#7	STR	4'-4"	35
✱F1	4	#6	STR	1'-9"	10
✱F2	2	#6	STR	3'-11"	12
✱F3	2	#6	STR	4'-4"	13
✱F4	2	#6	STR	3'-5"	10
✱F5	2	#6	STR	3'-7"	11
✱S1	272	#5	1	6'-2"	1750
✱S2	272	#5	2	5'-6"	1560
✱S3	16	#5	STR	3'-0"	50
✱EPOXY COATED REINFORCING STEEL				LBS.	5860
CLASS AA CONCRETE				C. Y.	30.8
CONCRETE PARAPET				L.F.	280.78

BILL OF MATERIAL
STAGE II CONST.
RIGHT PARAPET AND TWO END POSTS

BAR	NO.	SIZE	TYPE	LENGTH	WEIGHT
✱B1	4	#5	STR	10'-7"	44
✱B2	4	#5	STR	11'-1"	46
✱B3	64	#5	STR	29'-7"	1975
✱B4	4	#5	STR	27'-11"	116
✱B5	4	#5	STR	28'-6"	119
✱E1	4	#7	STR	2'-6"	20
✱E2	4	#7	STR	3'-4"	27
✱E3	4	#7	STR	3'-6"	29
✱E4	4	#7	STR	4'-0"	33
✱E5	4	#7	STR	4'-4"	35
✱F1	4	#6	STR	1'-9"	10
✱F2	2	#6	STR	3'-11"	12
✱F3	2	#6	STR	4'-4"	13
✱F4	2	#6	STR	3'-5"	10
✱F5	2	#6	STR	3'-7"	11
✱S1	272	#5	1	6'-2"	1750
✱S2	273	#5	2	5'-6"	1560
✱S3	16	#5	STR	3'-0"	50
✱EPOXY COATED REINFORCING STEEL				LBS.	5860
CLASS AA CONCRETE				C. Y.	30.8
CONCRETE PARAPET				L.F.	280.78

CONCRETE PARAPET REQUIRED L.F. 561.56

PROJECT NO. U-2524C
GUILFORD COUNTY
STATION: 332+65.40 -L-

SHEET 2 OF 2

STATE OF NORTH CAROLINA
DEPARTMENT OF TRANSPORTATION
RALEIGH

CONCRETE
PARAPET AND END POST

REVISIONS						SHEET NO.
NO.	BY:	DATE:	NO.	BY:	DATE:	S-560
1			3			TOTAL SHEETS
2			4			836

Stantec
Stantec Consulting Services Inc.
801 Jones Franklin Road
Suite 300
Raleigh, NC 27606
Tel. (919) 851-6866
Fax. (919) 851-7024
www.stantec.com
License No. F-0672

DRAWN BY : J. B. GEILE DATE : 04-11-13
CHECKED BY : T. R. DUDECK DATE : 04-11-13
DESIGN ENGINEER OF RECORD: J. T. KELVINGTON DATE : 04-16-13

SEAL 13406 ENGINEER JOSEPH T. KELVINGTON NORTH CAROLINA PROFESSIONAL

U:\Structures\Y2 Horsepen Creek Rd\Drawing\Final\U-2524C_SD_GRA DET_2.dgn 6/7/2013 2:53:46 PM jgeile

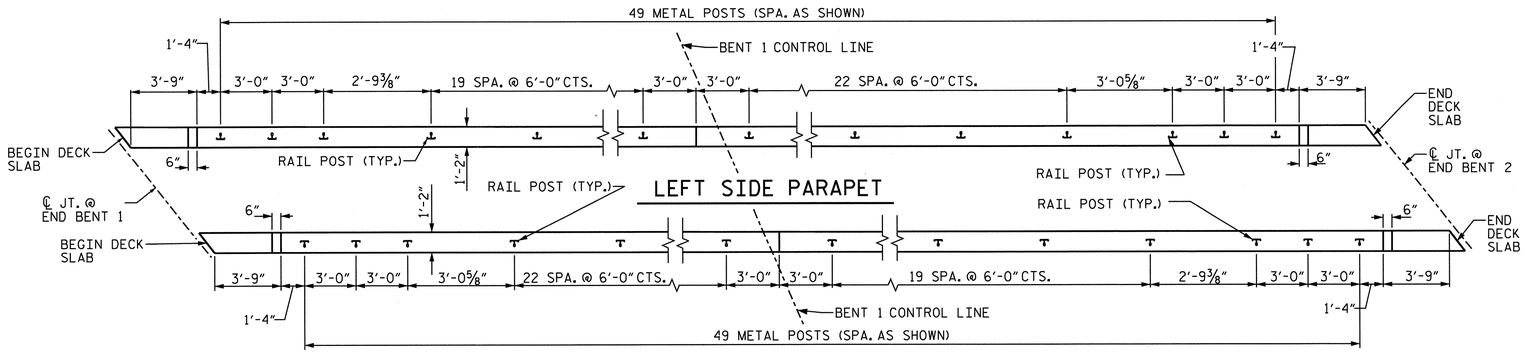

RIGHT SIDE PARAPET

PLAN OF RAIL POST SPACINGS

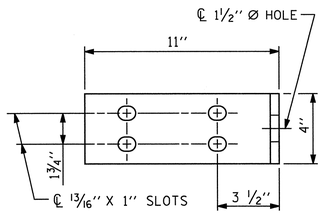

ELEVATION

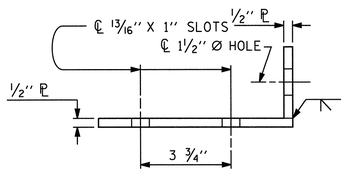

TOP VIEW

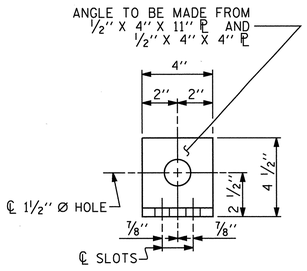

END VIEW (FIX AND EXP.)

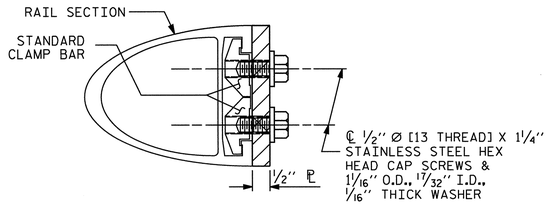

SECTION H-H (FIX)

FIXED

DETAILS FOR ATTACHING METAL RAIL TO END POST

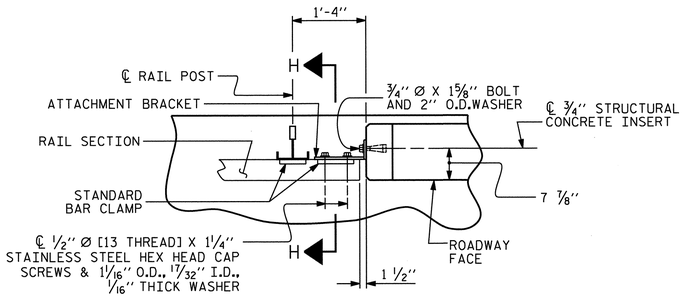

PLAN - RAIL AND END POST

NOTES

STRUCTURAL CONCRETE INSERT

THE STRUCTURAL CONCRETE INSERT ASSEMBLY SHALL CONSIST OF THE FOLLOWING COMPONENTS:

A. FERRULES SHALL BE MADE FROM STEEL MEETING THE REQUIREMENTS OF AASHTO M169, GRADE 12L14 AND SHALL HAVE A MINIMUM LENGTH OF THREADS OF 1½".

B. 1 - ¾" Ø X 1⅝" BOLT WITH WASHER. BOLT SHALL CONFORM TO THE REQUIREMENTS OF ASTM A307. BOLT AND WASHER SHALL BE GALVANIZED. (AT THE CONTRACTOR'S OPTION, STAINLESS STEEL BOLT AND WASHER MAY BE USED AS AN ALTERNATE FOR THE ¾" Ø X 1⅝" GALVANIZED BOLT AND WASHER. THEY SHALL CONFORM TO OR EXCEED THE MECHANICAL REQUIREMENTS OF ASTM A307. THE USE OF THIS ALTERNATE SHALL BE APPROVED BY THE ENGINEER.)

C. WIRE STRUT SHOWN IN THE CONCRETE INSERT ASSEMBLY DETAIL IS THE MINIMUM ALLOWABLE SIZE AND SHALL HAVE A MINIMUM TENSILE STRENGTH OF 100,000 PSI. AS AN OPTION, A 7/16" Ø WIRE STRUT WITH A MINIMUM TENSILE STRENGTH OF 90,000 PSI IS ACCEPTABLE.

NOTES

METAL RAIL TO END POST CONNECTION

THE METAL RAIL TO END POST CONNECTION SHALL CONSIST OF THE FOLLOWING COMPONENTS:

A. ½" PLATES SHALL CONFORM TO AASHTO M270 GRADE 36 AND SHALL BE GALVANIZED AFTER FABRICATION.

B. ¾" STRUCTURAL CONCRETE INSERT SHALL HAVE A WORKING LOAD SHEAR CAPACITY OF 4800 LBS. THE FERRULES SHALL ENGAGE A ¾"Ø X 1⅝" BOLT WITH 2" O.D. WASHER IN PLACE. THE ¾"Ø X 1⅝" BOLT SHALL HAVE N. C. THREADS.

C. CAP SCREWS FOR RAIL ATTACHMENT TO ANGLE SHALL CONFORM TO THE REQUIREMENTS OF ASTM F593 ALLOY 305 STAINLESS STEEL. CAP SCREWS TO BE CENTERED IN SLOTS AT 60°F.

D. STANDARD CLAMP BARS (SEE METAL RAIL SHEET).

E. ½" Ø PIPE SLEEVES (IF REQUIRED) TO BE GALVANIZED.

THE COST OF THE STANDARD CLAMP BARS AND CAP SCREWS USED IN THE METAL RAIL TO END POST CONNECTION SHALL BE INCLUDED IN THE UNIT CONTRACT PRICE BID FOR LINEAR FEET OF 1 OR 2 BAR METAL RAILS.

THE ¾" STRUCTURAL CONCRETE INSERT WITH BOLT SHALL BE ASSEMBLED IN THE SHOP.

THE COST OF THE ¾" STRUCTURAL CONCRETE INSERT ASSEMBLY, AND THE ½" PLATES COMPLETE IN PLACE SHALL BE INCLUDED IN THE VARIOUS PAY ITEMS.

THE CONTRACTOR, AT HIS OPTION, MAY USE AN ADHESIVE BONDING SYSTEM IN LIEU OF THE STRUCTURAL CONCRETE INSERT EMBEDDED IN THE END POST. IF THE ADHESIVE BONDING SYSTEM IS USED, THE ¾" Ø X 1⅝" BOLT WITH WASHER SHALL BE REPLACED WITH A ¾"Ø X 6½" BOLT AND 2" O.D. WASHER. ALL SPECIFICATIONS THAT APPLY TO THE ¾" Ø X 1⅝" BOLT SHALL APPLY TO THE ¾"Ø X 6 ½" BOLT. FIELD TESTING OF THE ADHESIVE BONDING SYSTEM IS NOT REQUIRED.

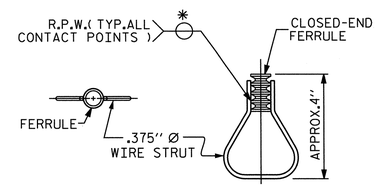

STRUCTURAL CONCRETE INSERT

*EACH WELDED ATTACHMENT OF WIRE TO FERRULE SHALL DEVELOP THE TENSILE STRENGTH OF THE WIRE.

PROJECT NO. U-2524C

GUILFORD COUNTY

STATION: 332+65.40 -L-

Stantec
Stantec Consulting Services Inc.
801 Jones Franklin Road
Suite 300
Raleigh, NC 27606
Tel. (919) 851-6866
Fax. (919) 851-7024
www.stantec.com
License No. F-0672

ASSEMBLED BY : M.G.BRADLEY DATE : 4/15/13
CHECKED BY : S.YUEN DATE : 4/15/13

DRAWN BY : FCJ 1/88
CHECKED BY : CRK 3/89

REV. 5/7/03 RWW/JTE
REV. 5/1/06 TLA/GM
REV. 10/1/11 MAA/GM

DESIGN ENGINEER OF RECORD: J. T. KELVINGTON DATE : 04-16-13

NORTH CAROLINA PROFESSIONAL SEAL 13406 ENGINEER JOSEPH T. KELVINGTON

STATE OF NORTH CAROLINA
DEPARTMENT OF TRANSPORTATION
RALEIGH
STANDARD

RAIL POST SPACINGS AND END OF RAIL DETAILS
FOR ONE OR TWO BAR METAL RAILS

REVISIONS						SHEET NO.
NO.	BY:	DATE:	NO.	BY:	DATE:	S-561
1			3			TOTAL SHEETS
2			4			836

U:\Structures\Y2 Horsepen Creek Rd\Drawing\Final\U-2524C_SD_BMR2_12.dgn 6/7/2013 2:53:48 PM jgelle STRUCTURES PEN TABLE.tbl Raleigh PDF Creator (Full).plt

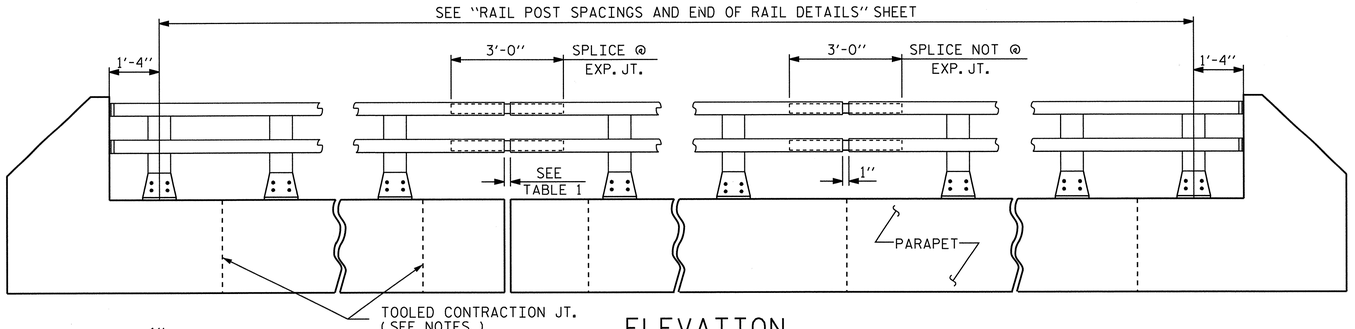

ELEVATION

NOTE : FOR ATTACHMENT OF METAL RAIL TO END POST, SEE STANDARD NO. BMR2.

TABLE 1	
℄ EXP. JT. @	RAIL OPENING
BENT No. 1	1"

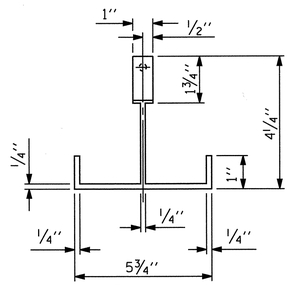

PLAN

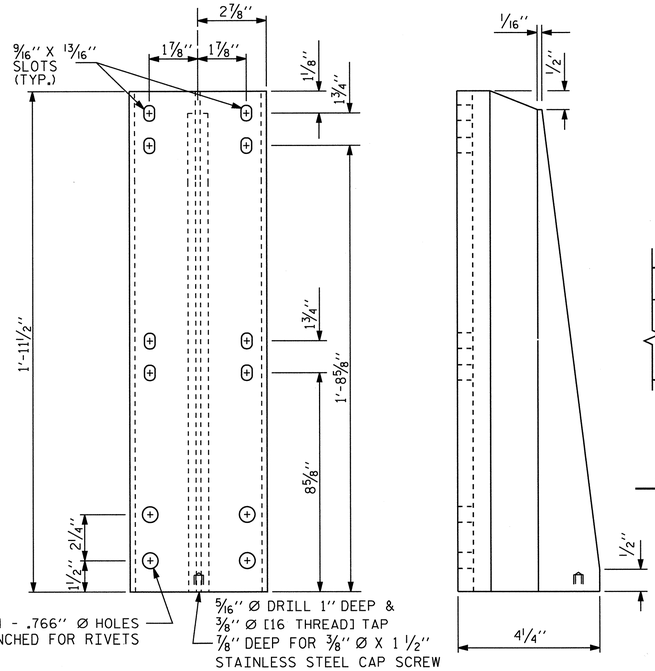

FRONT ELEVATION

SIDE ELEVATION

DETAILS OF POST

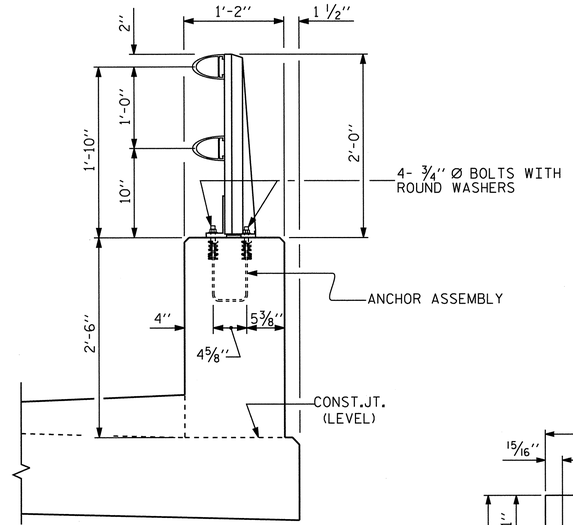

SECTION THRU PARAPET AND RAIL

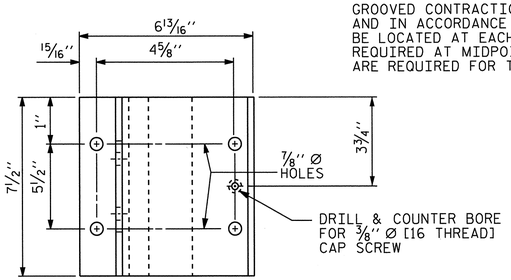

PLAN

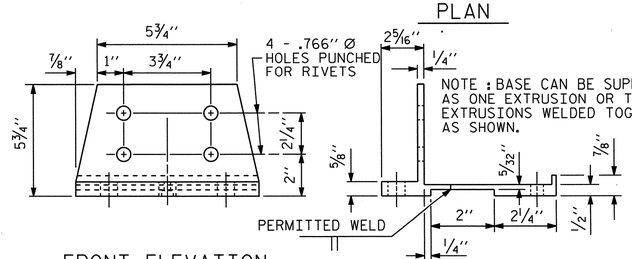

FRONT ELEVATION

SIDE ELEVATION

POST BASE DETAILS

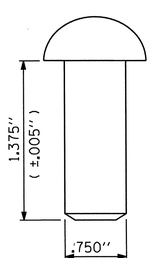

RIVET DETAIL

NOTES

AT THE CONTRACTOR'S OPTION, METAL RAIL MAY BE EITHER ALUMINUM OR GALVANIZED STEEL IN ACCORDANCE WITH THE REQUIREMENTS OF THE GENERAL NOTES AND THE FOLLOWING SPECIFICATIONS FOR THE ALTERNATE MATERIALS; HOWEVER, THE CONTRACTOR WILL BE REQUIRED TO USE THE SAME RAIL MATERIAL ON ALL STRUCTURES ON THE PROJECT FOR WHICH METAL RAIL IS DESIGNATED.

ALUMINUM RAILS

MATERIAL FOR POSTS, BASES AND RAILS, EXPANSION BARS AND CLAMP BARS SHALL BE ASTM B-221 ALLOY 6061-T6.

MATERIAL FOR RIVETS SHALL BE ASTM B316 ALLOY 6061-T6. RIVETS SHALL BE STANDARD BUTTON HEAD AND CONE POINT COLD DRIVEN AS PER DRAWING.

THE BASE OF RAIL POSTS, OR ANY OTHER ALUMINUM SURFACE IN CONTACT WITH CONCRETE SHALL BE THOROUGHLY COATED WITH AN ALUMINUM IMPREGNATED CAULKING COMPOUND OF APPROVED QUALITY.

MATERIAL FOR SHIMS TO BE ASTM B209 ALLOY 6061-T6.

GALVANIZED STEEL RAILS

MATERIAL AND GALVANIZING ARE TO CONFORM TO THE FOLLOWING SPECIFICATIONS:

POST, POST BASES, RAILS, EXPANSION BARS AND CLAMP BARS: AASHTO M270 GRADE 36 STRUCTURAL STEEL - GALVANIZED TO AASHTO M111.

RIVETS: RIVETS SHALL MEET THE REQUIREMENTS OF ASTM A502 FOR GRADE 1 RIVETS.

THE CUT ENDS OF GALVANIZED STEEL RAILING, AFTER GRINDING SMOOTH SHALL BE GIVEN TWO COATS OF ZINC RICH PAINT MEETING THE REQUIREMENTS OF FEDERAL SPECIFICATION MIL-P-26915 USAF TYPE I, OR OF FEDERAL SPECIFICATIONS TT-P-641.

SHIMS: SHIMS SHALL MEET THE REQUIREMENTS OF ASTM A570 FOR GRADE 33 OR A611 FOR GRADE C AND SHALL BE GALVANIZED IN ACCORDANCE WITH AASHTO M111.

RAIL CAPS: RAIL CAPS SHALL MEET THE REQUIREMENTS OF ASTM A570 FOR GRADE 33 OR A611 FOR GRADE C AND SHALL BE GALVANIZED IN ACCORDANCE WITH AASHTO M111.

GENERAL NOTES

RAILING SHALL BE CONTINUOUS FROM END POST TO END POST OF BRIDGE. EACH JOINT IN RAIL LENGTH SHALL BE SPLICED AS DETAILED. PANEL LENGTHS OF RAIL SHALL BE ATTACHED TO A MINIMUM OF THREE POSTS.

FOR END OF RAIL TO CLEAR FACE OF CONCRETE END POST DIMENSION, SEE STANDARD NO. BMR2.

CAP SCREWS SHALL BE ASTM F593 ALLOY 305 STAINLESS STEEL. WASHERS SHALL MEET THE REQUIREMENTS OF ASTM F844 EXCEPT THEY SHALL BE MADE FROM ALLOY 304 STAINLESS STEEL.

CERTIFIED MILL REPORTS ARE REQUIRED FOR RAILS AND POSTS. SHOP INSPECTION IS NOT REQUIRED.

METAL RAIL POSTS SHALL BE SET NORMAL TO CURB GRADE.

METHOD OF MEASUREMENT FOR METAL RAILS: FOR LENGTH OF METAL RAILS TO BE PAID FOR, SEE THE STANDARD SPECIFICATIONS.

CURVED RAIL USAGE: WHERE RAILS ARE TO BE USED ON BRIDGES ON HORIZONTAL AND/OR VERTICAL CURVATURE THE CONTRACTOR MAY, AT HIS OPTION, HAVE THE REQUIRED CURVATURE IN THE RAIL FORMED IN THE SHOP OR IN THE FIELD. IN EITHER EVENT, THE RAIL SHALL CONFORM WITHOUT BUCKLING OR KINKING TO THE REQUIRED CURVATURE IN A UNIFORM MANNER ACCEPTABLE TO THE ENGINEER.

TO INSURE FUTURE IDENTIFICATION OF THE FABRICATOR, A PERMANENT IDENTIFYING MARK SHALL BE PLACED ON EACH POST. THE METHOD OF MARKING AND LOCATION SHALL BE SUCH THAT IT DOES NOT DETRACT FROM THE APPEARANCE OF THE POST, BUT REMAINS VISIBLE AFTER RAIL PLACEMENT.

SHIMS SHALL BE USED AS NECESSARY FOR POST ALIGNMENT.

ALLOY 6351-T5 MAY BE SUBSTITUTED FOR ALLOY 6061-T6 WHERE APPLICABLE.

MINOR VARIATIONS IN DETAILS OF METAL RAIL WILL BE CONSIDERED. DETAILS OF SUCH VARIATIONS, IF DESIRED, SHALL BE SUBMITTED FOR APPROVAL.

GROOVED CONTRACTION JOINTS, 1/2" IN DEPTH, SHALL BE TOOLED IN ALL EXPOSED FACES OF THE PARAPET AND IN ACCORDANCE WITH ARTICLE 825-10(B) OF THE STANDARD SPECIFICATIONS. A CONTRACTION JOINT SHALL BE LOCATED AT EACH THIRD POINT BETWEEN PARAPET EXPANSION JOINTS. ONLY ONE CONTRACTION JOINT IS REQUIRED AT MIDPOINT OF PARAPET SEGMENTS LESS THAN 20 FEET IN LENGTH AND NO CONTRACTION JOINTS ARE REQUIRED FOR THOSE SEGMENTS LESS THAN 10 FEET IN LENGTH.

PAY LENGTH = 544.8 LIN. FT.

PROJECT NO. U-2524C

GUILFORD COUNTY

STATION: 332+65.40 -L-

SHEET 1 OF 2

STATE OF NORTH CAROLINA
DEPARTMENT OF TRANSPORTATION
RALEIGH

STANDARD

2 BAR METAL RAIL

REVISIONS						SHEET NO.
NO.	BY:	DATE:	NO.	BY:	DATE:	S-562
1			3			TOTAL SHEETS
2			4			836

STD. NO. BMR3

DESIGN ENGINEER OF RECORD: J. T. KELVINGTON DATE : 04-16-13

ASSEMBLED BY : J.B. GEILE DATE : 02/16/12
CHECKED BY : T.R. DUDECK DATE : 02/16/12

DRAWN BY : EEM 6/94
CHECKED BY : RGW 6/94

REV. 5/7/03R RWW/JTE
REV. 5/1/06 TLA/GM
REV. 10/1/11 MAA/GM

Stantec Consulting Services Inc.
801 Jones Franklin Road
Suite 300
Raleigh, NC 27606
Tel. (919) 851-6866
Fax. (919) 851-7024
www.stantec.com
License No. F-0672

NORTH CAROLINA PROFESSIONAL SEAL 13406 ENGINEER JOSEPH T. KELVINGTON 4/23/13

Raleigh PDF Creator (Full).plt
U:\Structures\Y2 Horsepen Creek Rd\Drawing\Final\U-2524C_SD_BMR3_12.dgn 6/7/2013 2:59:00 PM jgeile STRUCTURES PEN TABLE.tbl

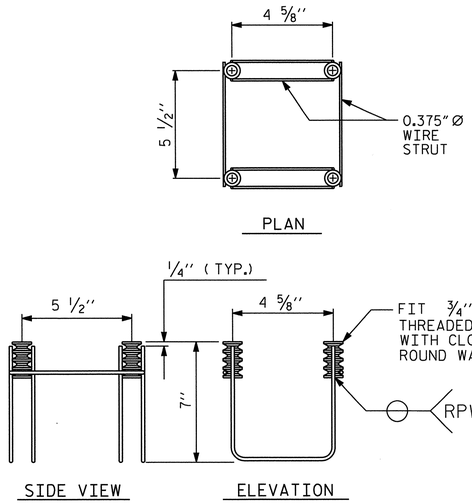

4-BOLT METAL RAIL ANCHOR ASSEMBLY

(98 ASSEMBLIES REQUIRED)

NOTES

STRUCTURAL CONCRETE ANCHOR ASSEMBLY

THE STRUCTURAL CONCRETE ANCHOR ASSEMBLY SHALL CONSIST OF THE FOLLOWING COMPONENTS :

A. FERRULES SHALL BE MADE FROM STEEL MEETING THE REQUIREMENTS OF AASHTO M169, GRADE 12L14 AND SHALL HAVE A MINIMUM LENGTH OF THREADS OF 2" FOR 3/4" FERRULES.

B. 4 - 3/4" Ø X 2 1/2" BOLTS WITH WASHERS. BOLTS SHALL CONFORM TO THE REQUIREMENTS OF ASTM A307. BOLTS AND WASHERS SHALL BE GALVANIZED. AT THE CONTRACTOR'S OPTION, STAINLESS STEEL BOLTS AND WASHERS MAY BE USED AS AN ALTERNATE FOR THE 3/4" Ø X 2 1/2" GALVANIZED BOLTS AND WASHERS. THEY SHALL CONFORM TO OR EXCEED THE MECHANICAL REQUIREMENTS OF ASTM A307. THE USE OF THIS ALTERNATE SHALL BE APPROVED BY THE ENGINEER.

C. WIRE STRUT SHOWN IN THE CONCRETE ANCHOR ASSEMBLY DETAIL IS THE MINIMUM ALLOWABLE SIZE AND SHALL HAVE A MINIMUM TENSILE STRENGTH OF 100,000 PSI. AS AN OPTION, A 7/16" Ø WIRE STRUT WITH A MINIMUM TENSILE STRENGTH OF 90,000 PSI IS ACCEPTABLE.

D. THE METAL RAIL ANCHOR ASSEMBLIES TO BE HOT DIPPED GALVANIZED TO CONFORM TO REQUIREMENTS OF AASHTO M111.

E. THE COST OF THE METAL RAIL ANCHOR ASSEMBLY WITH BOLTS AND WASHERS COMPLETE IN PLACE SHALL BE INCLUDED IN THE PRICE BID FOR LINEAR FEET OF METAL RAIL.

F. BOLTS TO BE TIGHTENED ONE-HALF TURN WITH A WRENCH FROM A FINGER-TIGHT POSITION.

THE CONTRACTOR MAY USE ADHESIVELY ANCHORED ANCHOR BOLTS IN PLACE OF THE METAL RAIL ANCHOR ASSEMBLY. LEVEL ONE FIELD TESTING IS REQUIRED, AND THE YIELD LOAD OF THE 3/4"Ø BOLT IS 10 KIPS. FOR ADHESIVELY ANCHORED ANCHOR BOLTS OR DOWELS, SEE THE STANDARD SPECIFICATIONS.

WHEN ADHESIVELY ANCHORED ANCHOR BOLTS ARE USED, BOLTS SHALL MEET THE REQUIREMENTS OF ASTM F593 ALLOY 304 STAINLESS STEEL WITH MINIMUM 75,000 PSI ULTIMATE STRENGTH. NUTS SHALL MEET THE REQUIREMENTS OF ASTM F594 ALLOY 304 STAINLESS STEEL AND WASHERS SHALL MEET THE REQUIREMENTS OF ASTM F844 EXCEPT THEY SHALL BE MADE FROM ALLOY 304 STAINLESS STEEL.

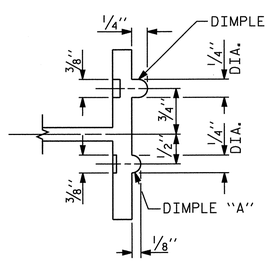

SECTION B - B

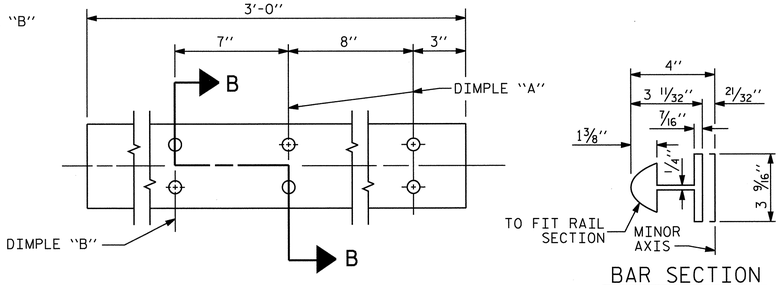

EXPANSION BAR DETAILS

BAR SECTION

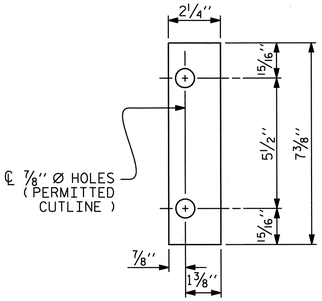

FRONT PLATE

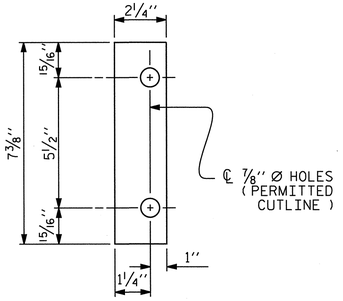

REAR PLATE

SHIM DETAILS

NOTE :
SHIMS MAY BE CUT ALONG PERMITTED CUTLINE OR SLOTTED TO EDGE OF PLATE TO FACILITATE PLACEMENT.

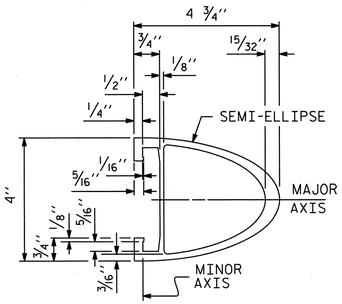

RAIL SECTION

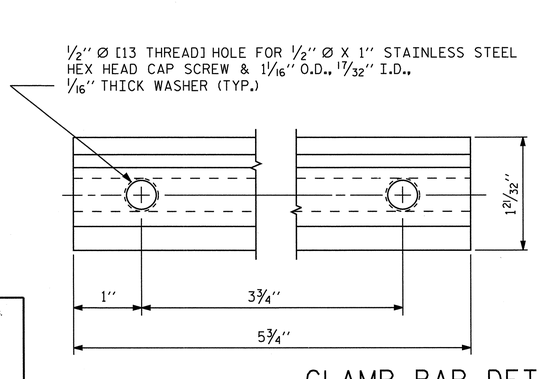

CLAMP BAR DETAIL

(4 REQUIRED PER POST)

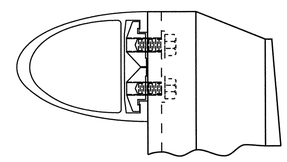

CLAMP ASSEMBLY

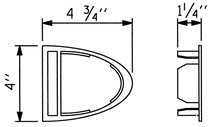

RAIL CAP

PROJECT NO. U-2524C

GUILFORD COUNTY

STATION: 332+65.40 -L-

SHEET 2 OF 2

STATE OF NORTH CAROLINA
DEPARTMENT OF TRANSPORTATION
RALEIGH

STANDARD

2 BAR METAL RAIL

REVISIONS						SHEET NO.
NO.	BY:	DATE:	NO.	BY:	DATE:	S-563
1			3			TOTAL SHEETS
2			4			836

Stantec
Stantec Consulting Services Inc.
801 Jones Franklin Road
Suite 300
Raleigh, NC 27606
Tel. (919) 851-6866
Fax. (919) 851-7024
www.stantec.com
License No. F-0672

ASSEMBLED BY : J.B. GEILE DATE : 02/16/12
CHECKED BY : T.R. DUDECK DATE : 02/16/12

DRAWN BY : EEM 6/94
CHECKED BY : RGW 6/94

REV. 8/16/99 MAB/LES
REV. 5/1/06R KMM/GM
REV. 10/1/11 MAA/GM

DESIGN ENGINEER OF RECORD: J. T. KELVINGTON DATE : 04-16-13

NORTH CAROLINA PROFESSIONAL SEAL 13406 ENGINEER JOSEPH T. KELVINGTON 4/17/13

STD. NO. BMR4

U:\Structures\Y2 Horsepen Creek Rd\Drawing\Final\U-2524C_SD_BMR4_12.dgn 6/7/2013 3:41:10 PM Jgeile STRUCTURES PEN TABLE.tbl Raleigh PDF Creator (Full).pit

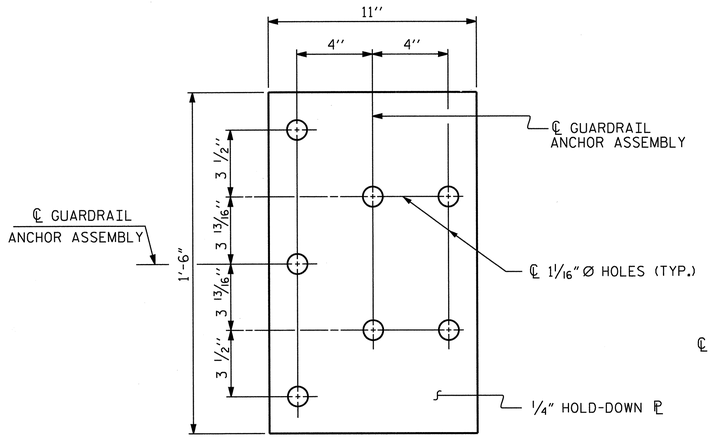

PLAN

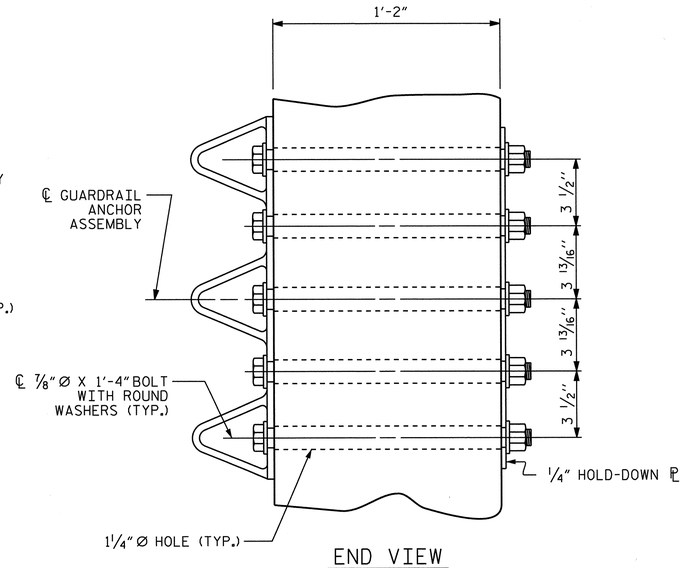

END VIEW

GUARDRAIL ANCHOR ASSEMBLY DETAILS

NOTES

THE GUARDRAIL ANCHOR ASSEMBLY SHALL CONSIST OF A 1/4'' HOLD DOWN PLATE AND 7 - 7/8'' Ø BOLTS WITH NUTS AND WASHERS.

THE HOLD-DOWN PLATE SHALL CONFORM TO AASHTO M270 GRADE 36. AFTER FABRICATION, THE HOLD-DOWN PLATE SHALL BE HOT-DIP GALVANIZED IN ACCORDANCE WITH AASHTO M111.

BOLTS SHALL CONFORM TO THE REQUIREMENTS OF ASTM A307 AND NUTS SHALL CONFORM TO THE REQUIREMENTS OF AASHTO M291. BOLTS, NUTS AND WASHERS SHALL BE GALVANIZED. AT THE CONTRACTOR'S OPTION, STAINLESS STEEL BOLTS, NUTS AND WASHERS MAY BE USED AS AN ALTERNATE FOR THE 7/8'' Ø GALVANIZED BOLTS, NUTS AND WASHERS. THEY SHALL CONFORM TO OR EXCEED THE MECHANICAL REQUIREMENTS OF ASTM A307. THE USE OF THIS ALTERNATE SHALL BE APPROVED BY THE ENGINEER.

THE GUARDRAIL ANCHOR ASSEMBLY IS REQUIRED AT ALL POINTS WHERE APPROACH GUARDRAIL IS TO BE ATTACHED TO THE END OF THE PARAPET. FOR POINTS OF ATTACHMENT, SEE SKETCH.

AFTER INSTALLATION, THE EXPOSED THREAD OF THE BOLT SHALL BE BURRED WITH A SHARP POINTED TOOL.

THE COST OF THE GUARDRAIL ANCHOR ASSEMBLIES WITH BOLTS, NUTS AND WASHERS COMPLETE IN PLACE, SHALL BE INCLUDED IN THE VARIOUS PAY ITEMS.

THE VERTICAL REINFORCING BARS MAY BE SHIFTED SLIGHTLY IN THE END POST TO CLEAR ASSEMBLY BOLTS.

THE 1 1/4'' Ø HOLES SHALL BE FORMED OR DRILLED WITH A CORE BIT. IMPACT TOOLS WILL NOT BE PERMITTED. ANY CONCRETE DAMAGED BY THIS WORK SHALL BE REPAIRED TO THE SATISFACTION OF THE ENGINEER.

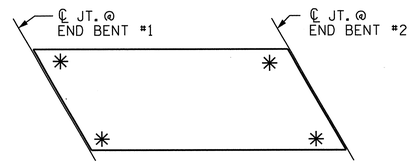

SKETCH SHOWING POINTS OF ATTACHMENT

*LOCATION OF GUARDRAIL ATTACHMENT

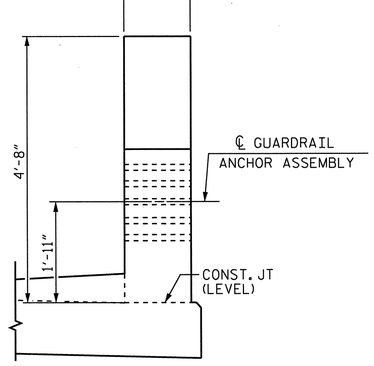

END VIEW
(TWO BAR METAL RAIL)

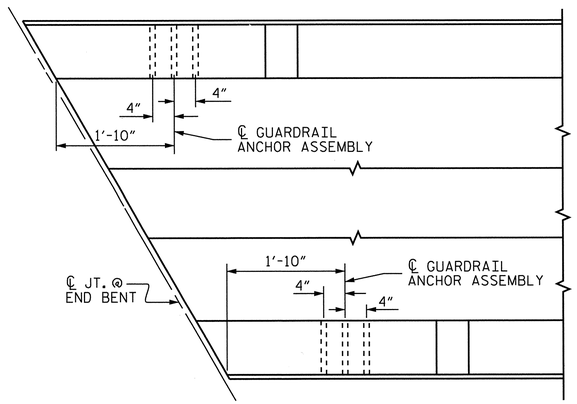

PLAN

LOCATION OF GUARDRAIL ANCHOR AT END POST

PROJECT NO. U-2524C

GUILFORD COUNTY

STATION: 322+65.40 -L-

Stantec
Stantec Consulting Services Inc.
801 Jones Franklin Road
Suite 300
Raleigh, NC 27606
Tel. (919) 851-6866
Fax. (919) 851-7024
www.stantec.com
License No. F-0672

ASSEMBLED BY :	J. B. GEILE	DATE :	06-27-12
CHECKED BY :	T. R. DUDECK	DATE :	06-27-12
DRAWN BY :	MAA 5/10	ADDED	5/6/10 MAA/GM
CHECKED BY :	GM 5/10	REV.	10/1/11 MAA/GM
		REV.	12/5/11 MAA/GM

DESIGN ENGINEER OF RECORD: J. T. KELVINGTON DATE : 04-16-13

STATE OF NORTH CAROLINA
DEPARTMENT OF TRANSPORTATION
RALEIGH

STANDARD

GUARDRAIL ANCHORAGE DETAILS FOR METAL RAILS & VERTICAL CONCRETE BARRIER RAIL

REVISIONS						SHEET NO.
NO.	BY:	DATE:	NO.	BY:	DATE:	S-564
1			3			TOTAL SHEETS
2			4			836

U:\Structures\V2 Horsepen Creek Rd\Drawing\Final\U-2524C_SD_GRA3_12.dgn 6/7/2013 3:11:12 PM jgeile STRUCTURES PEN TABLE.tbl Raleigh PDF Creator (Full).plt

REINFORCING BAR SCHEDULE

STAGE I CONSTRUCTION

BAR	NO.	SIZE	TYPE	LENGTH	WEIGHT	BAR	NO.	SIZE	TYPE	LENGTH	WEIGHT
*A1	537	5	STR.	44'-9"	25064	A213	6	5	STR.	21'-8"	136
A2	537	5	STR.	44'-9"	25064	A214	6	5	STR.	19'-10"	124
*A6	6	6	STR.	16'-11"	152	A215	6	5	STR.	18'-0"	113
						A216	6	5	STR.	16'-3"	102
*A101	6	5	STR.	43'-3"	271	A217	6	5	STR.	14'-5"	90
*A102	6	5	STR.	41'-5"	259	A218	6	5	STR.	12'-7"	79
*A103	6	5	STR.	39'-8"	248	A219	6	5	STR.	10'-9"	67
*A104	6	5	STR.	37'-10"	237	A220	6	5	STR.	9'-0"	56
*A105	6	5	STR.	36'-0"	225	A221	6	5	STR.	7'-2"	45
*A106	6	5	STR.	34'-2"	214	A222	6	5	STR.	5'-4"	33
*A107	6	5	STR.	32'-5"	203	A223	6	5	STR.	3'-7"	22
*A108	6	5	STR.	30'-7"	191	*B1	175	5	STR.	58'-1"	10602
*A109	6	5	STR.	28'-9"	180	B2	310	5	STR.	57'-10"	18699
*A110	6	5	STR.	27'-0"	169	*B3	297	5	STR.	45'-2"	13991
*A111	6	5	STR.	25'-2"	157	*B4	90	4	STR.	29'-10"	1794
*A112	6	5	STR.	23'-4"	146						
*A113	6	5	STR.	21'-6"	135	*D1	1204	5	STR.	6'-5"	8058
*A114	6	5	STR.	19'-9"	124						
*A115	6	5	STR.	17'-11"	112	*G1	2	5	STR.	56'-2"	117
*A116	6	5	STR.	16'-1"	101	*G2	281	4	STR.	6'-6"	1220
*A117	6	5	STR.	14'-4"	90						
*A118	6	5	STR.	12'-6"	78	*K1	8	5	1	12'-8"	106
*A119	6	5	STR.	10'-8"	67	*K2	24	5	2	17'-1"	428
*A120	6	5	STR.	8'-10"	55	*K3	8	5	1	12'-3"	102
*A121	6	5	STR.	7'-1"	44						
*A122	6	5	STR.	5'-3"	33	*S1	80	4	3	4'-10"	258
*A123	6	5	STR.	3'-5"	21						
A201	6	5	STR.	43'-4"	271	*U1	80	4	4	3'-4"	178
A202	6	5	STR.	41'-7"	260						
A203	6	5	STR.	39'-9"	249						
A204	6	5	STR.	37'-11"	237						
A205	6	5	STR.	36'-1"	226						
A206	6	5	STR.	34'-4"	215						
A207	6	5	STR.	32'-6"	203						
A208	6	5	STR.	30'-8"	192						
A209	6	5	STR.	28'-11"	181						
A210	6	5	STR.	27'-1"	169						
A211	6	5	STR.	25'-3"	158						
A212	6	5	STR.	23'-5"	147						

STAGE II CONSTRUCTION

BAR	NO.	SIZE	TYPE	LENGTH	WEIGHT	BAR	NO.	SIZE	TYPE	LENGTH	WEIGHT
*A3	546	5	STR.	39'-9"	22637	A266	6	5	STR.	11'-3"	70
A4	546	5	STR.	39'-9"	22637	A267	6	5	STR.	9'-5"	59
*A7	6	6	STR.	12'-1"	109	A268	6	5	STR.	7'-7"	47
*A151	6	5	STR.	38'-3"	239	A269	6	5	STR.	5'-9"	36
*A152	6	5	STR.	36'-5"	228	A270	6	5	STR.	4'-0"	25
*A153	6	5	STR.	34'-8"	217						
*A154	6	5	STR.	32'-10"	205	*B5	175	5	STR.	58'-1"	10602
*A155	6	5	STR.	31'-0"	194	B6	305	5	STR.	57'-10"	18398
*A156	6	5	STR.	29'-2"	183	*B7	291	5	STR.	45'-2"	13709
*A157	6	5	STR.	27'-5"	172	*B8	124	4	STR.	29'-10"	2471
*A158	6	5	STR.	25'-7"	160						
*A159	6	5	STR.	23'-9"	149	*D2	1204	5	STR.	6'-5"	8058
*A160	6	5	STR.	22'-0"	138						
*A161	6	5	STR.	20'-2"	126	*G3	2	5	STR.	56'-2"	117
*A162	6	5	STR.	18'-4"	115	*G4	281	4	STR.	6'-6"	1220
*A163	6	5	STR.	16'-6"	103	*G5	147	4	STR.	3'-0"	295
*A164	6	5	STR.	14'-9"	92	*G6	46	4	STR.	5'-10"	179
*A165	6	5	STR.	12'-11"	81	*G7	1	4	STR.	5'-9"	4
*A166	6	5	STR.	11'-1"	69	*G8	1	4	STR.	5'-7"	4
*A167	6	5	STR.	9'-4"	58	*G9	1	4	STR.	5'-5"	4
*A168	6	5	STR.	7'-6"	47	*G10	1	4	STR.	5'-3"	4
*A169	6	5	STR.	5'-8"	35	*G11	1	4	STR.	5'-0"	3
*A170	6	5	STR.	3'-10"	24	*G12	1	4	STR.	4'-10"	3
A251	6	5	STR.	38'-4"	240	*G13	1	4	STR.	4'-8"	3
A252	6	5	STR.	36'-7"	229	*G14	1	4	STR.	4'-6"	3
A253	6	5	STR.	34'-9"	217	*G15	1	4	STR.	4'-4"	3
A254	6	5	STR.	32'-11"	206	*G16	1	4	STR.	4'-2"	3
A255	6	5	STR.	31'-1"	195	*G17	1	4	STR.	3'-11"	3
A256	6	5	STR.	29'-4"	184	*G18	1	4	STR.	3'-9"	3
A257	6	5	STR.	27'-6"	172	*G19	1	4	STR.	3'-7"	2
A258	6	5	STR.	25'-8"	161	*G20	3	4	STR.	3'-5"	7
A259	6	5	STR.	23'-11"	150	*G21	1	4	STR.	7'-1"	5
A260	6	5	STR.	22'-1"	138						
A261	6	5	STR.	20'-3"	127	*K4	8	5	2	16'-1"	134
A262	6	5	STR.	18'-5"	115	*K5	24	5	2	15'-7"	390
A263	6	5	STR.	16'-8"	104	*K6	8	5	1	12'-3"	102
A264	6	5	STR.	14'-10"	93						
A265	6	5	STR.	13'-0"	81	*S2	72	4	3	4'-10"	232
						*U2	80	4	4	3'-4"	178

SUPERSTRUCTURE REINFORCING STEEL LENGTHS ARE BASED ON THE FOLLOWING MINIMUM SPLICE LENGTHS

BAR SIZE	SUPERSTRUCTURE EXCEPT APPROACH SLABS, PARAPET, AND BARRIER RAIL		APPROACH SLABS		PARAPET AND BARRIER RAIL
	EPOXY COATED	UNCOATED	EPOXY COATED	UNCOATED	
#4	2'-0"	1'-9"	2'-0"	1'-9"	2'-9"
#5	2'-6"	2'-2"	2'-6"	2'-2"	3'-5"
#6	3'-0"	2'-7"	3'-10"	2'-7"	4'-4"
#7	5'-3"	3'-6"			
#8	6'-10"	4'-7"			

GROOVING BRIDGE FLOORS

APPROACH SLABS	3,392 SQ.FT.
BRIDGE DECK	19,820 SQ.FT.
TOTAL	23,212 SQ.FT.

CLASS AA CONC. BREAKDOWN

STAGE I CONSTRUCTION		STAGE II CONSTRUCTION	
POUR 1	122.3 C.Y.	POUR 1	109.2 C.Y
POUR 2	278.5 C.Y.	POUR 2	248.6 C.Y.
POUR 3	7.9 C.Y.	POUR 3	7.0 C.Y.
SIDEWALK	46.6 C.Y.	POUR 4	54.5 C.Y.
		SIDEWALK	46.6 C.Y.
		MEDIAN	21.0 C.Y.
STAGE I TOTAL CLASS AA CONC.	455.3 C.Y.	STAGE II TOTAL CLASS AA CONC.	486.9 C.Y.
TOTAL CLASS AA CONC.		935.2 C.Y.	

BAR TYPES

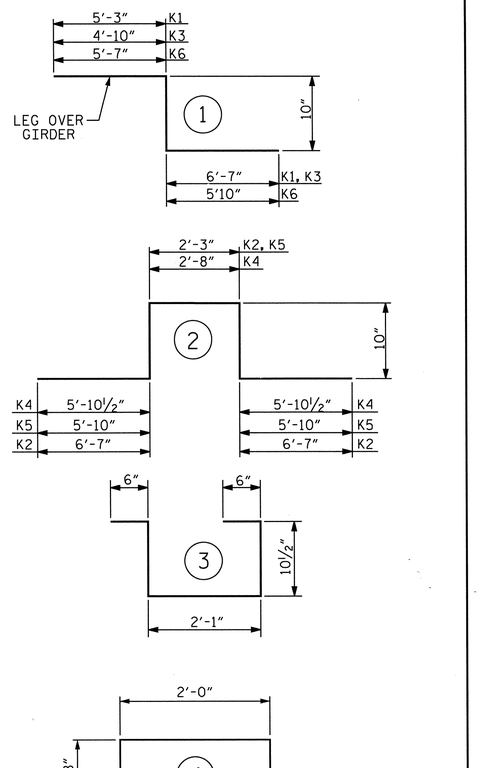

ALL BAR DIMENSIONS ARE OUT TO OUT

SUPERSTRUCTURE BILL OF MATERIAL

	CLASS AA CONCRETE	REINFORCING STEEL	EPOXY COATED REINFORCING STEEL
	(CU.YDS.)	(LBS.)	(LBS.)
STAGE I	455.3	47,138	65,430
STAGE II	486.9	43,684	63,122
TOTALS**	942.2	90,822	128,552

**QUANTITIES FOR CONCRETE PARAPET ARE NOT INCLUDED

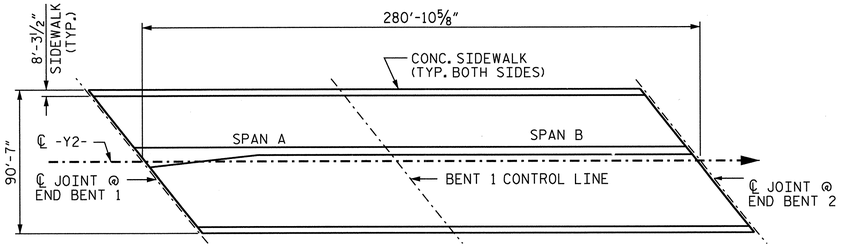

LAYOUT FOR COMPUTING AREA
OF REINFORCED CONCRETE DECK SLAB
(SQ. FT. = 25,434)

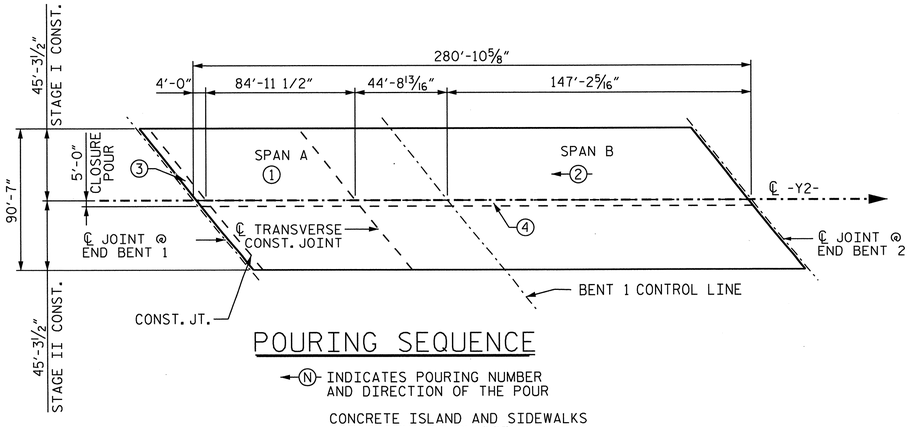

POURING SEQUENCE

(N) INDICATES POURING NUMBER AND DIRECTION OF THE POUR

CONCRETE ISLAND AND SIDEWALKS NOT SHOWN FOR CLARITY

Stantec Consulting Services Inc.
801 Jones Franklin Road
Suite 300
Raleigh, NC 27606
Tel. (919) 851-6866
Fax. (919) 851-7024
www.stantec.com
License No. F-0672

ASSEMBLED BY : JLH DATE : 4/13
CHECKED BY : JTK DATE : 4/13

DRAWN BY : JMB 5/87
CHECKED BY : SJD 9/87

REV. 8/16/99 RWW/LES
REV. 5/1/06 TLA/GM
REV. 10/1/11 MAA/GM

DESIGN ENGINEER OF RECORD: J. T. KELVINGTON DATE : 04-16-13

NORTH CAROLINA PROFESSIONAL SEAL 13406 ENGINEER JOSEPH T. KELVINGTON

STATE OF NORTH CAROLINA
DEPARTMENT OF TRANSPORTATION
RALEIGH

STANDARD

SUPERSTRUCTURE
BILL OF MATERIAL

PROJECT NO. U-2524C
GUILFORD COUNTY
STATION: 332+65.40 -L-

REVISIONS						SHEET NO.
NO.	BY:	DATE:	NO.	BY:	DATE:	S-565
1			3			TOTAL SHEETS
2			4			836

Raleigh PDF Creator (Full).plt
STRUCTURES PEN TABLE.tbl
jgellie 2:53:56 PM 6/7/2013
U:\Structures\Y2 Horsepen Creek Rd\Drawing\Final\U-2524C_SD_BOM_l2.dgn

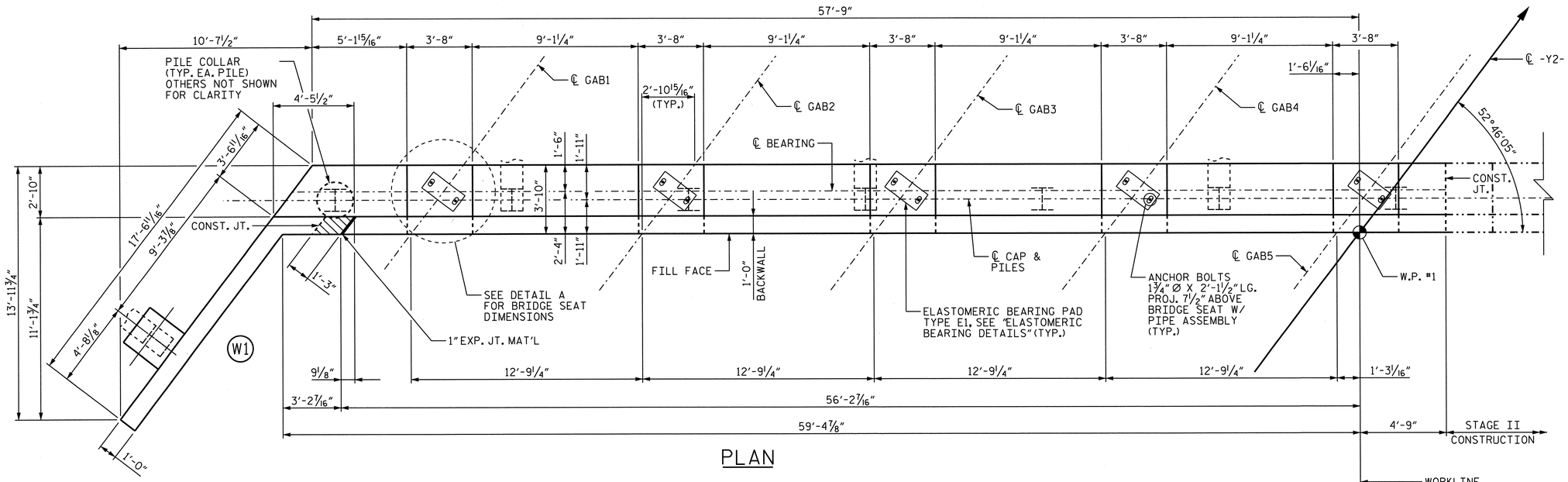

PLAN

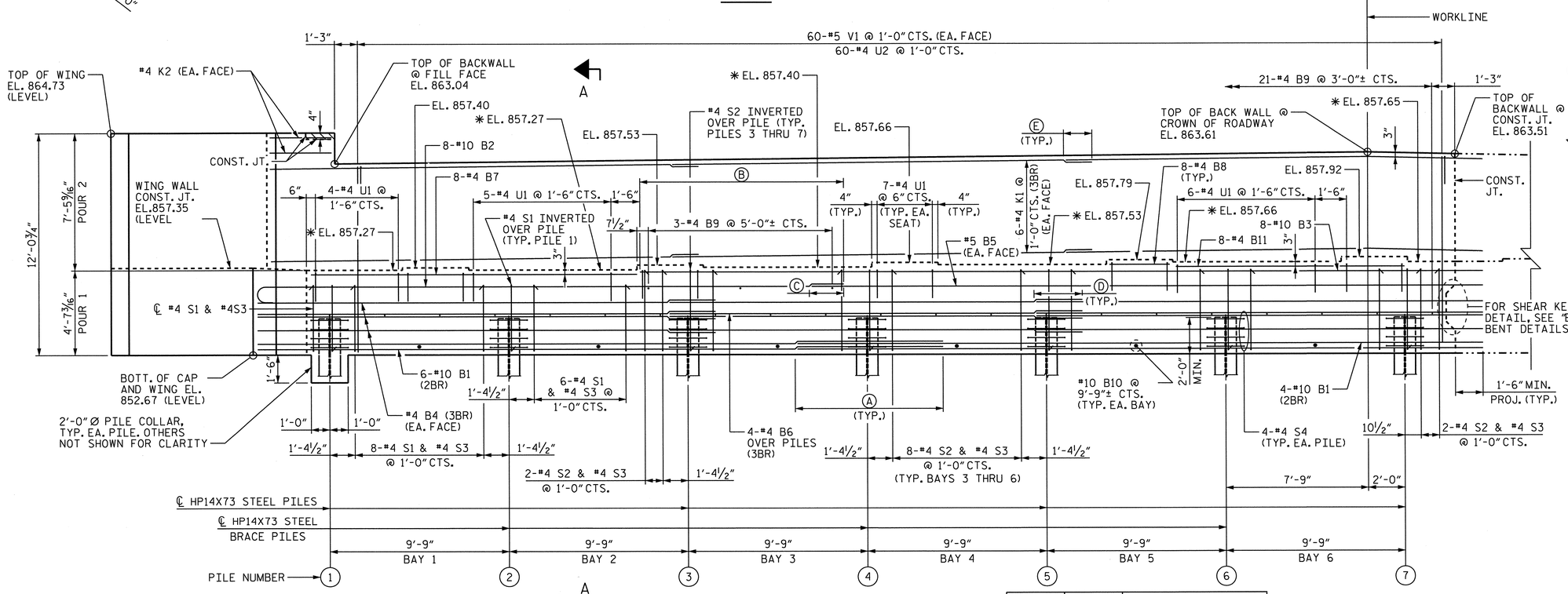

ELEVATION

✱FOR TOP OF CAP ELEV. LOCATION, SEE SECTION B-B ON "END BENT 1 DETAILS", SHEET 4 OF 5.

DIM.	BAR	MIN. SPLICE
Ⓐ	B1	7'-11"
Ⓑ	B2	11'-1"
Ⓒ	B5	1'-9"
Ⓓ	B4, B6	2'-5"
Ⓔ	K1	1'-5"

REINFORCING BAR SPLICES

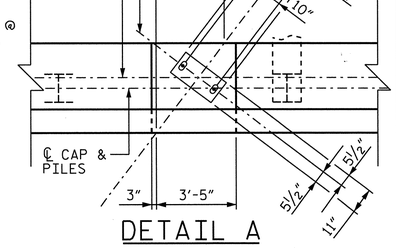

DETAIL A

NOTES

STIRRUPS IN THE CAP MAY BE SHIFTED AS NECESSARY TO CLEAR PIPE INSERTS.

FOR PIPE INSERT DETAILS SEE BEARINGS SHEET.

BACKWALL SHALL BE PLACED BEFORE APPLYING THE EPOXY PROTECTIVE COATING.

THE TOP SURFACE AREAS OF THE END BENT CAPS SHALL BE CURED IN ACCORDANCE WITH THE STANDARD SPECIFICATIONS EXCEPT THE MEMBRANE CURING COMPOUND SHALL NOT BE USED.

THE TOP SURFACE OF THE CAP EXCEPT THE BRIDGE SEAT BUILDUPS SHALL BE SLOPED TRANSVERSELY FROM THE FILL FACE TO THE BACK FACE AT THE RATE OF 2%.

THE CONCRETE IN THE SHADED AREA OF THE WING WALL SHALL BE POURED AFTER THE PARAPET AND END POST ARE CAST IF SLIP FORMING IS USED.

INSTALL THE 4" DIA. DRAIN PIPE THROUGH THE WING WALL AS REQUIRED FOR REINFORCED BRIDGE APPROACH FILLS, SEE THE ROADWAY PLANS. REIFORCING STEEL IN THE WING WALL MAY BE SHIFTED AS NECESSARY TO CLEAR THE DRAIN PIPE.

EPOXY COAT THE END BENT CAP AFTER ADJUSTMENTS ARE MADE TO BEARING AND ANCHOR BOLTS ARE GROUTED.

2BR DENOTES 2 BAR RUN.

3BR DENOTES 3 BAR RUN.

PILE CUT OFF ELEVATION = 854.67 (TYP.)

PROJECT NO. U-2524C

GUILFORD COUNTY

STATION: 332+65.40 -L-

SHEET 1 of 5

STATE OF NORTH CAROLINA
DEPARTMENT OF TRANSPORTATION
RALEIGH

SUBSTRUCTURE

END BENT 1
(STAGE I CONST.)

REVISIONS						SHEET NO.
NO.	BY:	DATE:	NO.	BY:	DATE:	S-566
1			3			TOTAL SHEETS
2			4			836

Stantec Consulting Services Inc.
801 Jones Franklin Road
Suite 300
Raleigh, NC 27606
Tel. (919) 851-6866
Fax. (919) 851-7024
www.stantec.com
License No. F-0672

DRAWN BY : V. T. DOAN DATE : 03-15-13
CHECKED BY : J. T. KELVINGTON DATE : 03-16-13
DESIGN ENGINEER OF RECORD: J. T. KELVINGTON DATE : 04-16-13

NORTH CAROLINA PROFESSIONAL SEAL 13406 ENGINEER JOSEPH T. KELVINGTON

U:\Structures\U2 Horsepen Creek Rd\Drawing\Final\U-2524C_SD_EB#1.dgn 6/7/2013 2:54:03 PM lgelle

NOTES

FOR NOTES, SEE "END BENT 1 (STAGE I CONST.)".

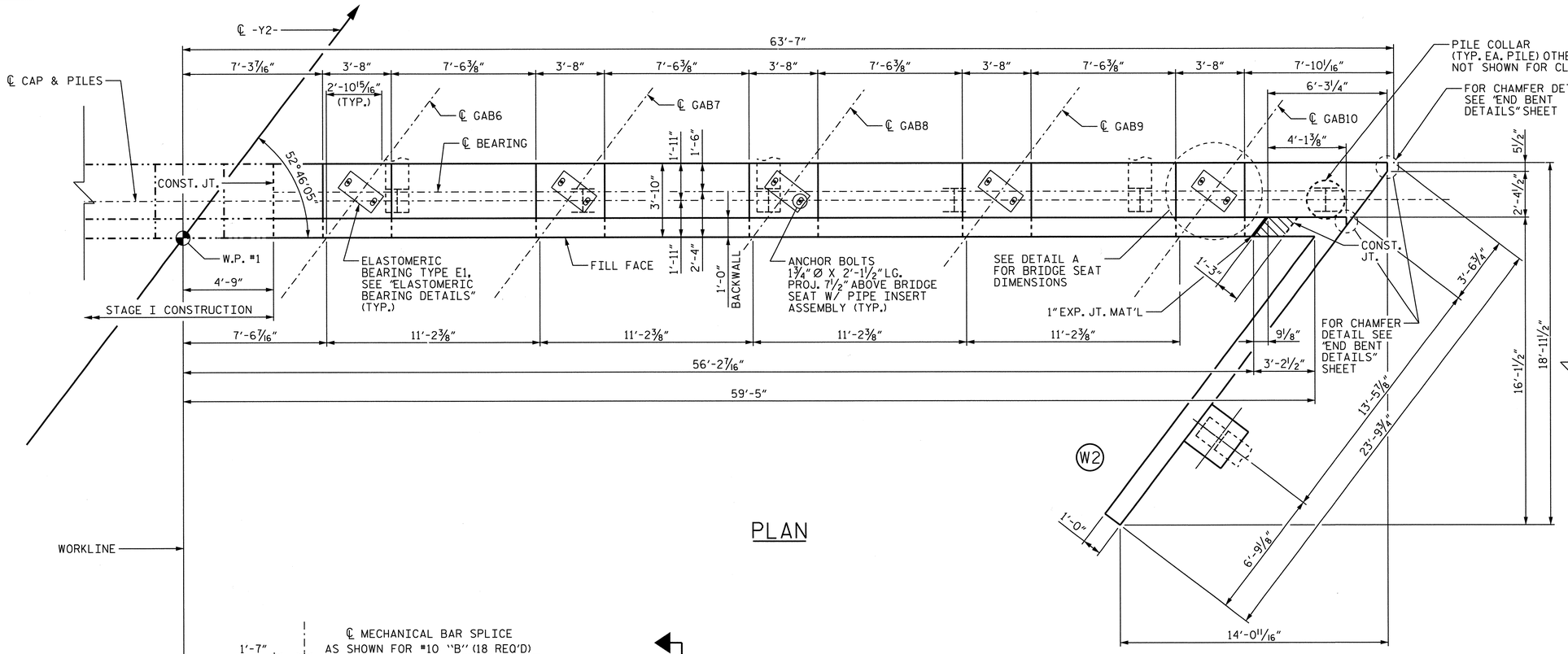

PLAN

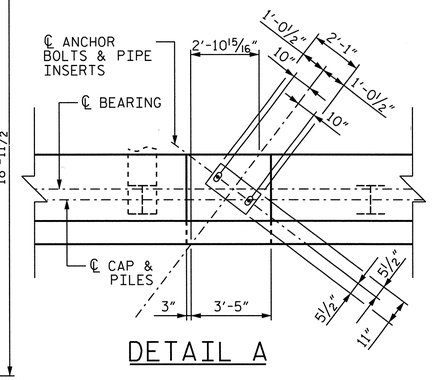

DETAIL A

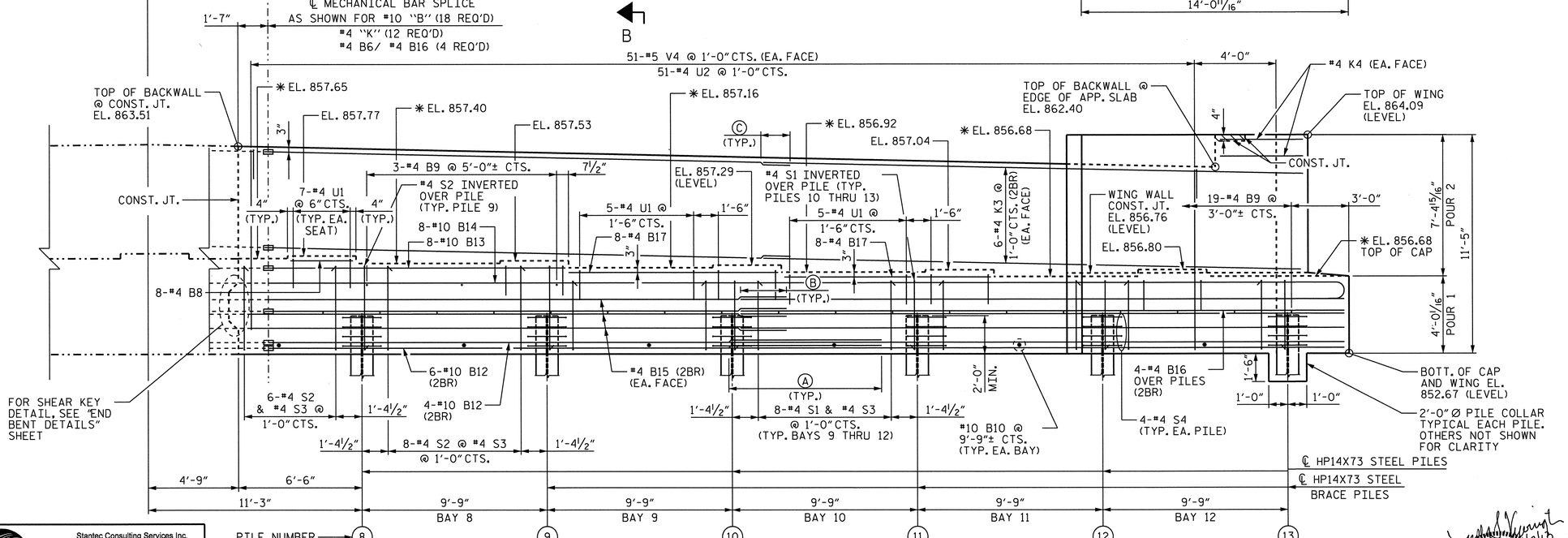

ELEVATION

* FOR TOP OF CAP ELEV. LOCATION, SEE SECTION B-B ON "END BENT 1 DETAILS", SHEET 4 OF 5.

DIM.	BAR	MIN. SPLICE
Ⓐ	B12	7'-11"
Ⓑ	B15, B16	2'-5"
Ⓒ	K3	1'-5"

REINFORCING BAR SPLICES

PROJECT NO. U-2524C

GUILFORD COUNTY

STATION: 332+65.40 -L-

SHEET 2 of 5

STATE OF NORTH CAROLINA
DEPARTMENT OF TRANSPORTATION
RALEIGH

SUBSTRUCTURE

END BENT 1
(STAGE II CONST.)

REVISIONS						SHEET NO.
NO.	BY:	DATE:	NO.	BY:	DATE:	S-567
1			3			TOTAL SHEETS
2			4			836

Stantec Consulting Services Inc.
801 Jones Franklin Road
Suite 300
Raleigh, NC 27606
Tel. (919) 851-6866
Fax. (919) 851-7024
www.stantec.com
License No. F-0672

DRAWN BY : V. T. DOAN DATE : 03-15-13
CHECKED BY : J. T. KELVINGTON DATE : 03-16-13

DESIGN ENGINEER OF RECORD: J. T. KELVINGTON DATE : 04-16-13

NORTH CAROLINA PROFESSIONAL SEAL 13406 ENGINEER JOSEPH T. KELVINGTON

4/17/13

U:\Structures\V2 Horsepen Creek Rd\Drawing\Final\U-2524C_SD_EB#1_2.dgn 6/7/2013 2:54:05 PM jgelle

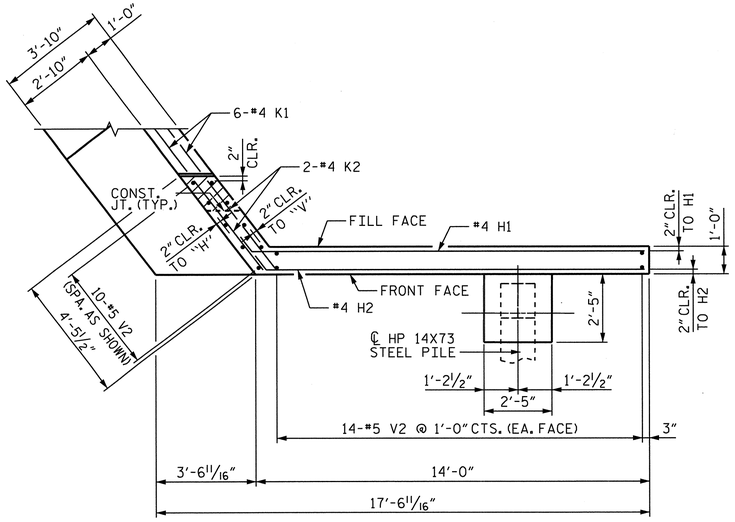

PLAN OF LEFT WING (W1)

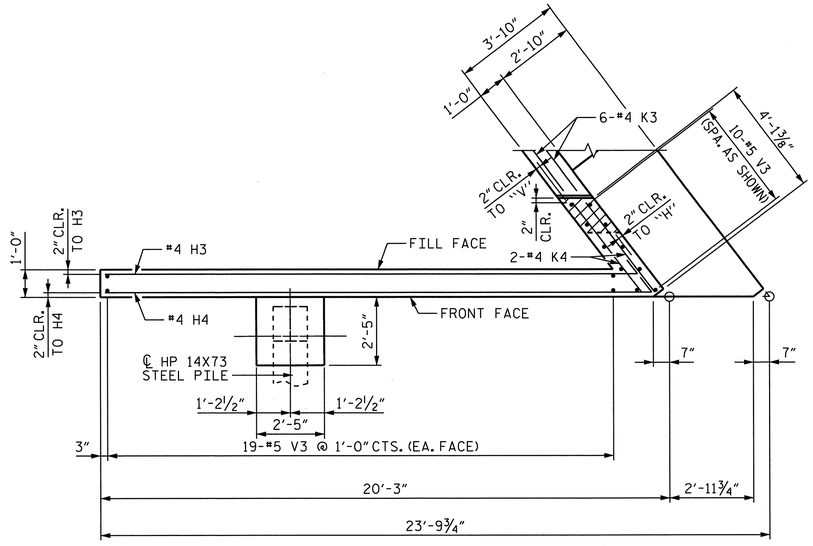

PLAN OF RIGHT WING (W2)

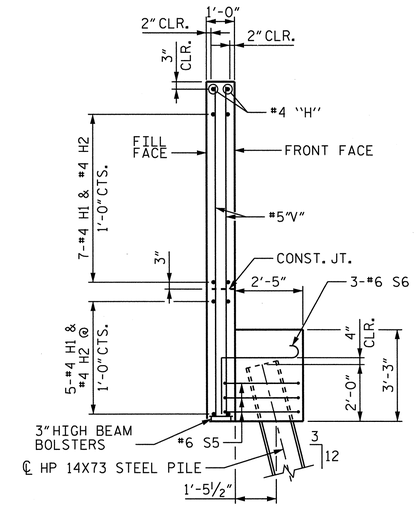

SECTION E-E

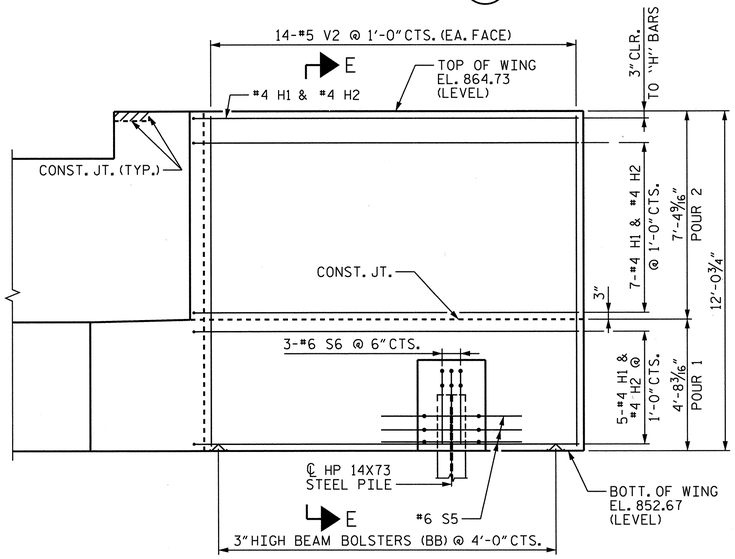

ELEVATION OF LEFT WING (W1)

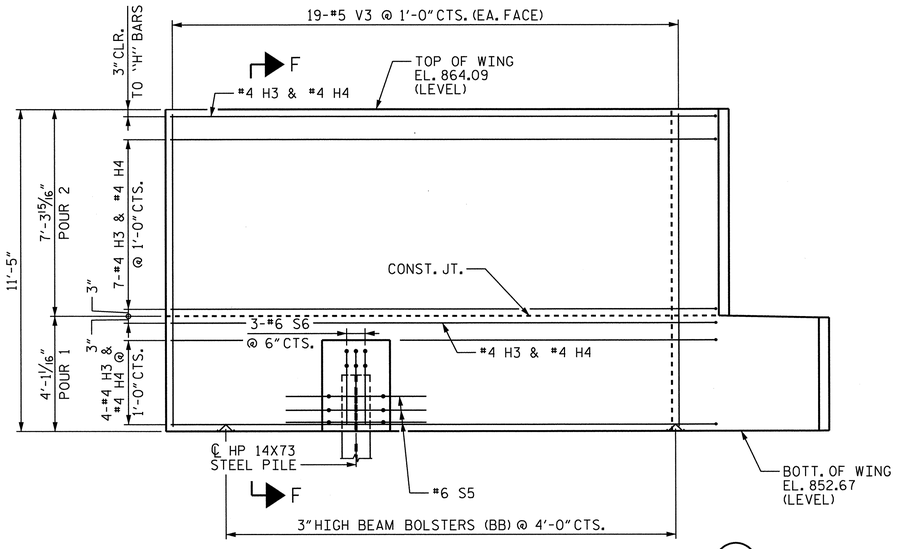

ELEVATION OF RIGHT WING (W2)

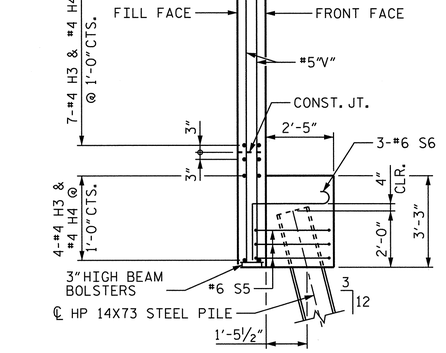

SECTION F-F

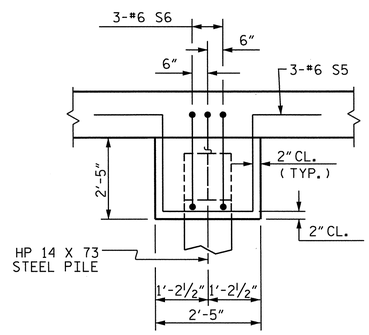

WING WALL PILE DETAIL

PROJECT NO. U-2524C

GUILFORD COUNTY

STATION: 332+65.40 -L-

SHEET 3 OF 5

STATE OF NORTH CAROLINA
DEPARTMENT OF TRANSPORTATION
RALEIGH

SUBSTRUCTURE

END BENT 1
WING WALL DETAILS

REVISIONS						SHEET NO.
NO.	BY:	DATE:	NO.	BY:	DATE:	S-568
1			3			TOTAL SHEETS
2			4			836

Stantec Consulting Services Inc.
801 Jones Franklin Road
Suite 300
Raleigh, NC 27606
Tel. (919) 851-6866
Fax. (919) 851-7024
www.stantec.com
License No. F-0672

DRAWN BY : J. L. HENNEKES DATE : 04-11-13
CHECKED BY : V. T. DOAN DATE : 04-11-13
DESIGN ENGINEER OF RECORD: J. T. KELVINGTON DATE : 04-16-13

NORTH CAROLINA PROFESSIONAL SEAL 13406 ENGINEER JOSEPH T. KELVINGTON

U:\Structures\V2 Horsepen Creek Rd\Drawing\Final\U-2524C_SD_EB#1_3.dgn 6/7/2013 3:56:09 PM jgelle

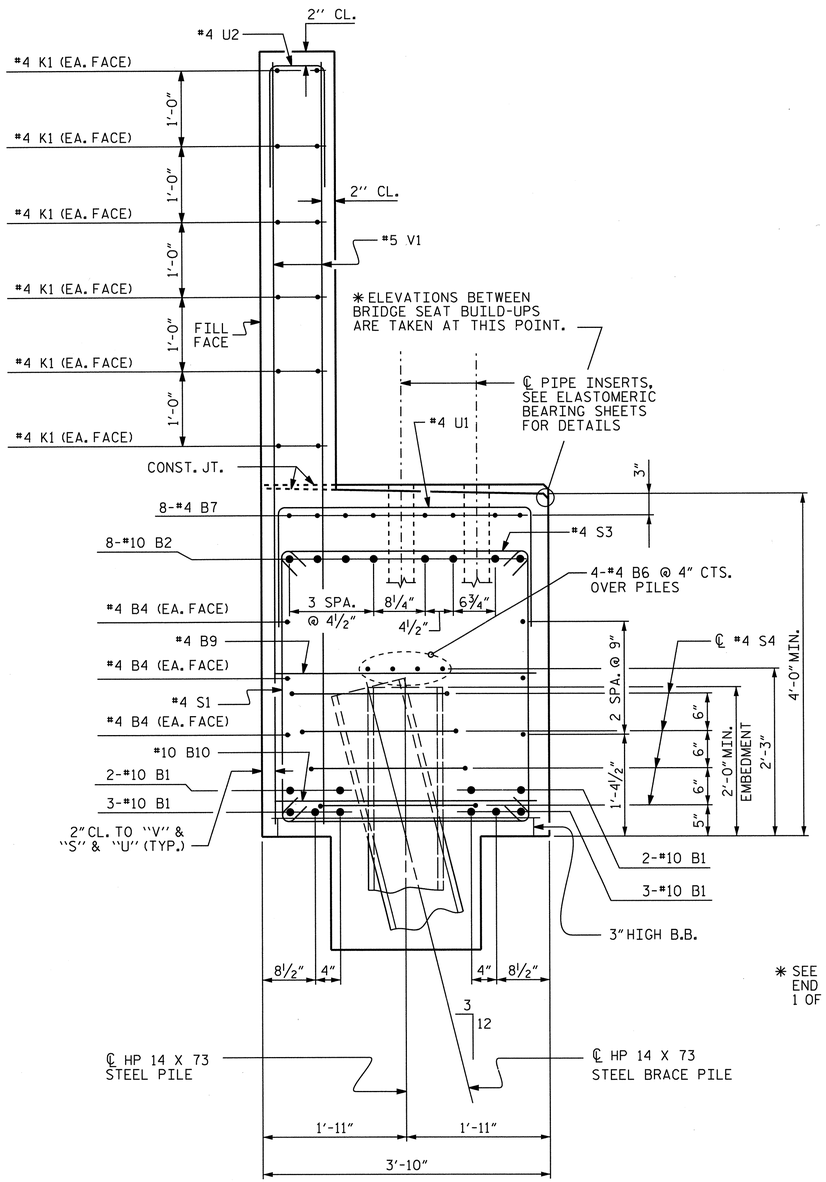

SECTION A-A

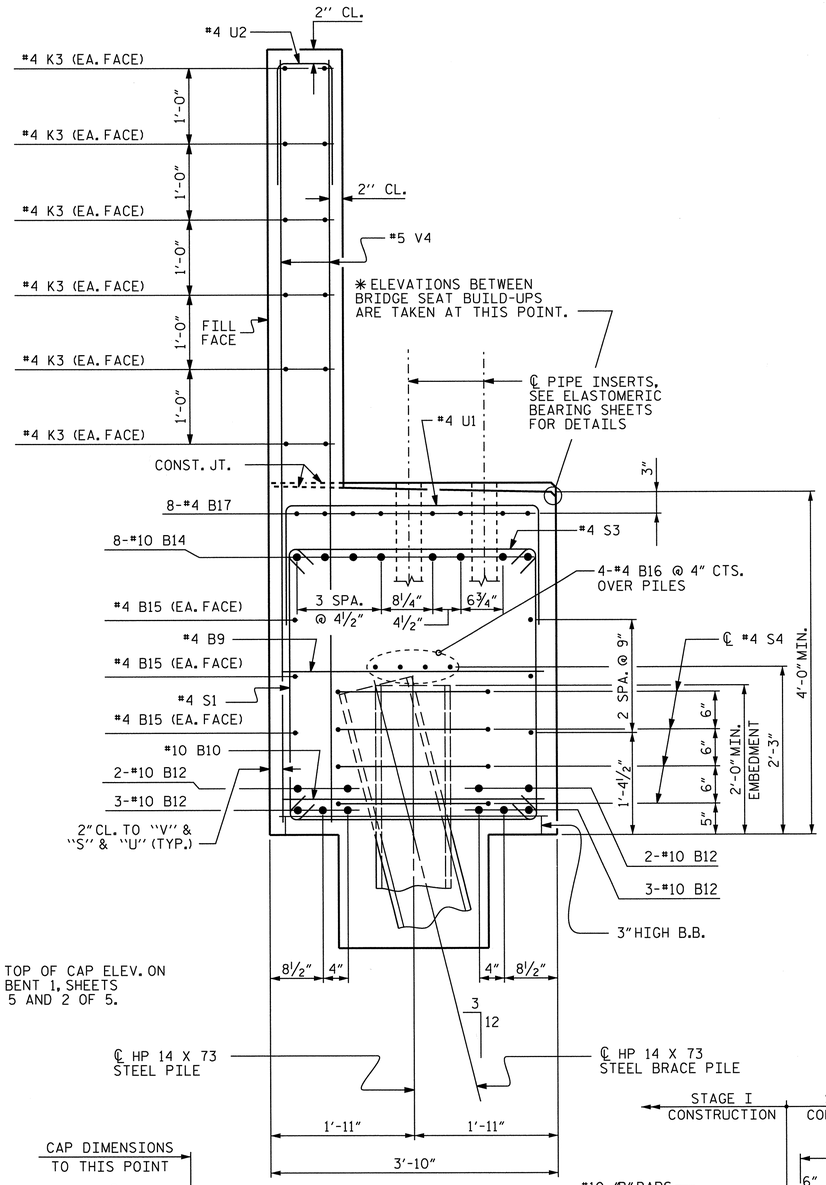

SECTION B-B

✱ SEE TOP OF CAP ELEV. ON END BENT 1, SHEETS 1 OF 5 AND 2 OF 5.

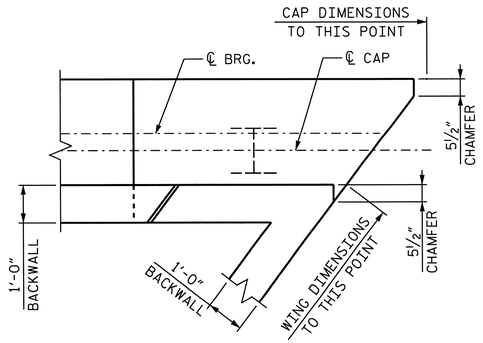

CHAMFER DETAIL

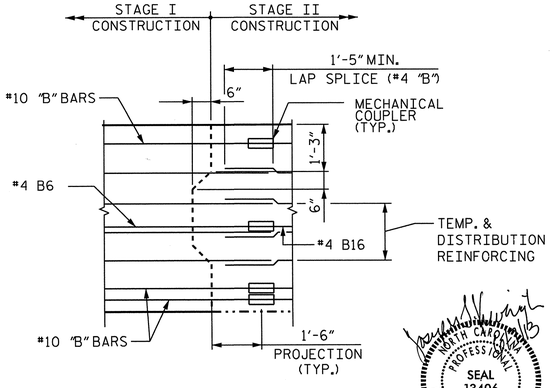

SHEAR KEY DETAIL

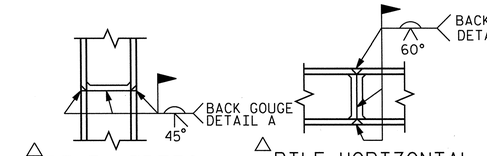

△ PILE VERTICAL

△ PILE HORIZONTAL OR VERTICAL

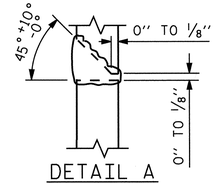

DETAIL A

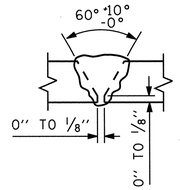

DETAIL B

△ POSITION OF PILE DURING WELDING.

PILE SPLICE DETAILS

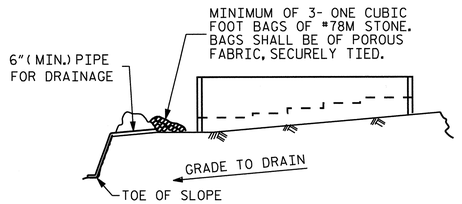

BAGGED STONE AND PIPE SHALL BE PLACED IMMEDIATELY AFTER COMPLETION OF END BENT EXCAVATION. PIPE MAY BE EITHER CONCRETE, CORRUGATED STEEL, CORRUGATED ALUMINUM ALLOY, OR CORRUGATED PLASTIC. PERFORATED PIPE WILL NOT BE ALLOWED.

BAGGED STONE SHALL REMAIN IN PLACE UNTIL THE ENGINEER DIRECTS THAT IT BE REMOVED. THE CONTRACTOR SHALL REMOVE AND DISPOSE OF SILT ACCUMULATIONS AT BAGGED STONE WHEN SO DIRECTED BY THE ENGINEER. BAGS SHALL BE REMOVED AND REPLACED WHENEVER THE ENGINEER DETERMINES THAT THEY HAVE DETERIORATED AND LOST THEIR EFFECTIVENESS.

NO SEPARATE PAYMENT WILL BE MADE FOR THIS WORK AND THE ENTIRE COST OF THIS WORK SHALL BE INCLUDED IN THE UNIT CONTRACT PRICE BID FOR THE SEVERAL PAY ITEMS.

TEMPORARY DRAINAGE AT END BENT

Stantec
Stantec Consulting Services Inc.
801 Jones Franklin Road
Suite 300
Raleigh, NC 27606
Tel. (919) 851-6866
Fax. (919) 851-7024
www.stantec.com
License No. F-0672

DRAWN BY : V. T. DOAN DATE : 04-11-13
CHECKED BY : S. S. YUEN DATE : 04-11-13

DESIGN ENGINEER OF RECORD: J. T. KELVINGTON DATE : 04-16-13

PROJECT NO. U-2524C
GUILFORD COUNTY
STATION: 332+65.40 -L-

SHEET 4 of 5

STATE OF NORTH CAROLINA
DEPARTMENT OF TRANSPORTATION
RALEIGH

SUBSTRUCTURE

END BENT 1 DETAILS

REVISIONS						SHEET NO.
NO.	BY:	DATE:	NO.	BY:	DATE:	S-569
1			3			TOTAL SHEETS
2			4			836

SEAL 13406 JOSEPH T. KELVINGTON ENGINEER NORTH CAROLINA PROFESSIONAL

U:\Structures\Y2 Horsepen Creek Rd\Drawing\Final\U-2524C_SD_EB#1_4.dgn 6/7/2013 2:54:09 PM jgelle STRUCTURES PEN TABLE.tbl Raleigh PDF Creator (Full).plt

BILL OF MATERIAL
END BENT 1 - STAGE I CONSTRUCTION

BAR	NO.	SIZE	TYPE	LENGTH	WEIGHT
B1	20	10	STR.	37'-2"	3199
B2	8	10	1	30'-6"	1050
B3	8	10	STR.	45'-9"	1575
B4	18	4	STR.	23'-9"	286
B5	2	5	STR.	32'-0"	67
B6	12	4	STR.	23'-3"	186
B7	8	4	STR.	17'-6"	94
B8	8	4	STR.	3'-4"	18
B9	24	4	STR.	3'-6"	56
B10	6	10	STR.	3'-6"	90
B11	2	4	STR.	12'-5"	17
H1	13	4	6	14'-9"	128
H2	13	4	6	14'-4"	124
K1	36	4	STR.	23'-2"	557
K2	4	4	STR.	3'-9"	10
S1	17	4	3	11'-6"	131
S2	41	4	3	12'-11"	354
S3	51	4	2	4'-3"	145
S4	28	4	5	8'-4"	156
S5	3	6	8	9'-11"	45
S6	3	6	9	5'-9"	26
U1	50	4	4	7'-0"	234
U2	60	4	4	3'-11"	157
V1	120	5	STR.	10'-0"	1252
V2	38	5	STR.	11'-8"	584

REINFORCING STEEL LBS 10,541

CLASS A CONCRETE BREAKDOWN

POUR 1 - CAP, COLLAR AND LOWER WING	C.Y. 48.4
POUR 2 - BACKWALL & UPPER WING	C.Y. 15.9
CLASS A CONCRETE TOTAL	C.Y. 64.3

HP14X73 PILES

NO. 8 FEET 360.00

BILL OF MATERIAL
END BENT 1 - STAGE II CONSTRUCTION

BAR	NO.	SIZE	TYPE	LENGTH	WEIGHT
B8	8	4	STR.	3'-4"	18
B9	22	4	STR.	3'-6"	51
B10	6	10	STR.	3'-6"	90
B12	20	10	STR.	32'-4"	2783
B13	8	10	STR.	15'-7"	536
B14	8	10	1	56'-4"	1939
B15	12	4	STR.	30'-3"	242
B16	8	4	STR.	29'-6"	158
B17	16	4	STR.	10'-10"	116
H3	13	4	7	19'-10"	172
H4	13	4	7	20'-1"	174
K3	24	4	STR.	28'-10"	462
K4	4	4	STR.	3'-7"	10
S1	36	4	3	11'-6"	277
S2	16	4	3	12'-11"	138
S3	46	4	2	4'-3"	131
S4	24	4	5	8'-4"	134
S5	3	6	8	9'-11"	45
S6	3	6	9	5'-9"	26
U1	45	4	4	7'-0"	210
U2	51	4	4	5'-1"	173
V3	48	5	STR.	11'-1"	555
V4	102	5	STR.	9'-4"	993

REINFORCING STEEL LBS 9.433

CLASS A CONCRETE BREAKDOWN

POUR 1 - CAP, COLLAR AND LOWER WING	C.Y. 40.9
POUR 2 - BACKWALL & UPPER WING	C.Y. 19.3
CLASS A CONCRETE TOTAL	C.Y. 60.2

HP14X73 PILES

NO. 7 FEET 350.00

BAR TYPES

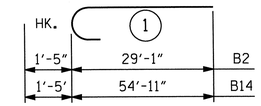

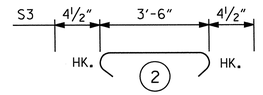

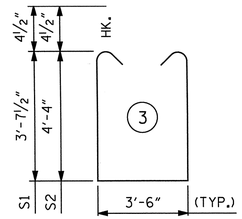

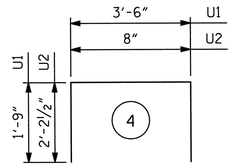

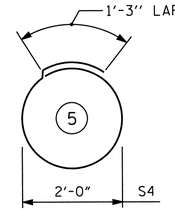

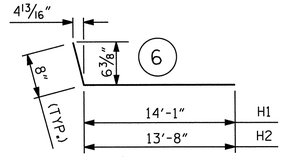

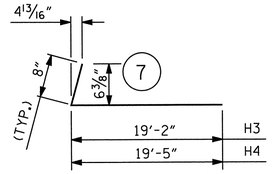

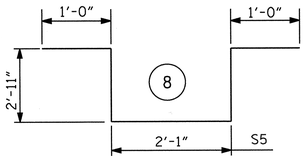

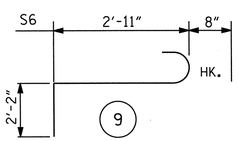

ALL BAR DIMENSIONS ARE OUT TO OUT.

PROJECT NO. U-2524C

GUILFORD COUNTY

STATION: 332+65.40 -L-

SHEET 5 of 5

STATE OF NORTH CAROLINA
DEPARTMENT OF TRANSPORTATION
RALEIGH

SUBSTRUCTURE

END BENT 1
BILL OF MATERIAL

REVISIONS						SHEET NO.
NO.	BY:	DATE:	NO.	BY:	DATE:	S-570
1			3			TOTAL SHEETS
2			4			836

NORTH CAROLINA PROFESSIONAL SEAL 13406 ENGINEER JOSEPH T. KELVINGTON 7/1/13

Stantec Consulting Services Inc.
801 Jones Franklin Road
Suite 300
Raleigh, NC 27606
Tel. (919) 851-6866
Fax. (919) 851-7024
www.stantec.com
License No. F-0672

DRAWN BY : V. T. DOAN DATE : 04-11-13
CHECKED BY : S. S. YUEN DATE : 04-11-13

DESIGN ENGINEER OF RECORD: J. T. KELVINGTON DATE : 04-16-13

U:\Structures\Y2 Horsepen Creek Rd\Drawing\Final\U-2524C_SD_EB#1_5.dgn 6/7/2013 2:54:11 PM Jgelie STRUCTURES PEN TABLE.tbl Raleigh PDF Creator (Full).pit

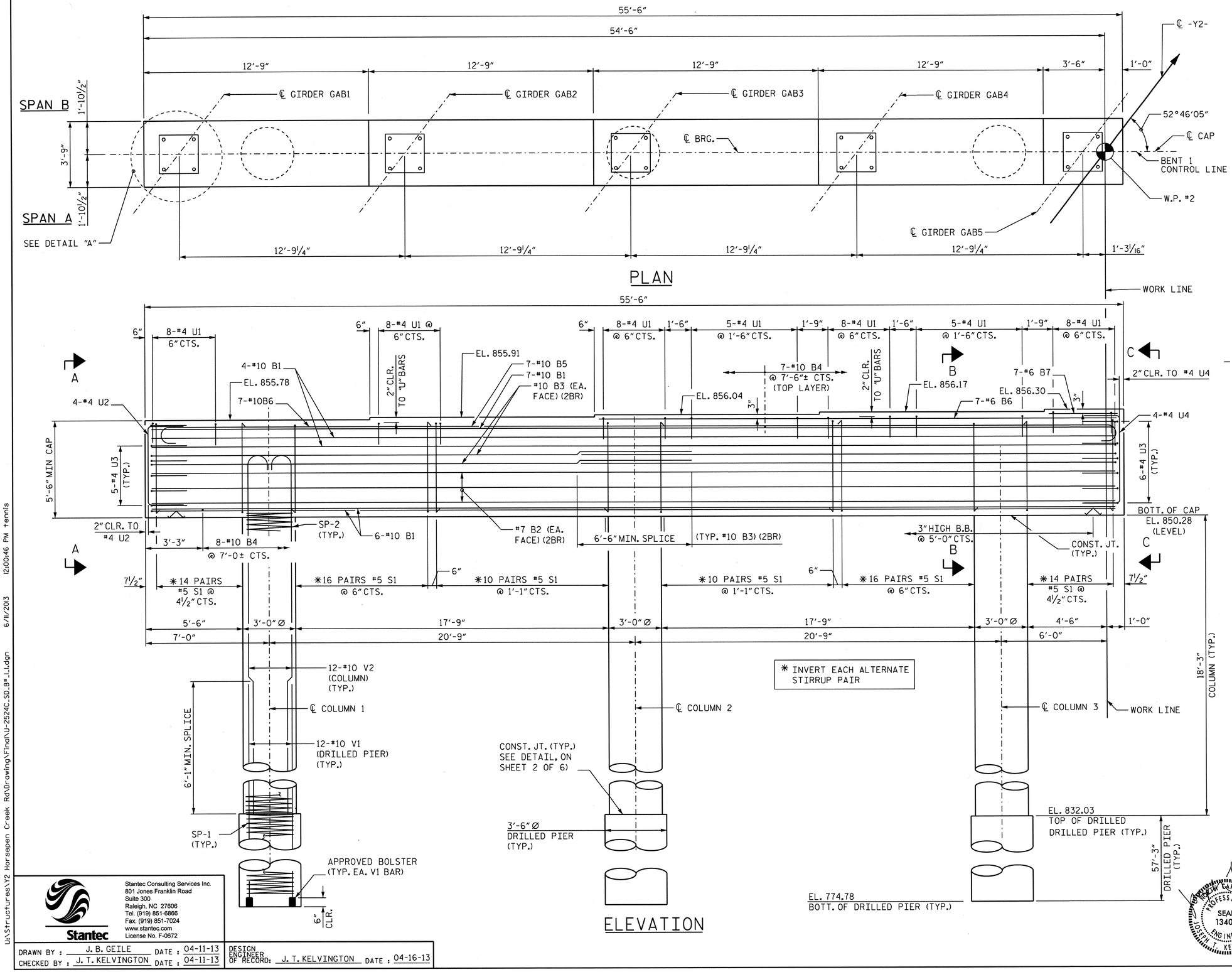

NOTES:

STIRRUPS IN CAP MAY BE SHIFTED AS NECESSARY TO CLEAR ANCHOR BOLTS.

HOOKS ON "V" BARS MAY BE TURNED AS NECESSARY FOR PLACING REINF. STEEL.

ALL STEEL IN THE DRILLED PIERS IS INCLUDED IN THE PAY ITEMS FOR "REINFORCING STEEL" AND "SPIRAL COLUMN REINFORCING STEEL".

FOR SECTION A-A, SECTION B-B, AND SECTION C-C, SEE BENT 1 SHT. 3 OF 6.

2BR DENOTES 2 BAR RUN.

FOR COLUMN EXCAVATION, SEE SPECIAL PROVISIONS.

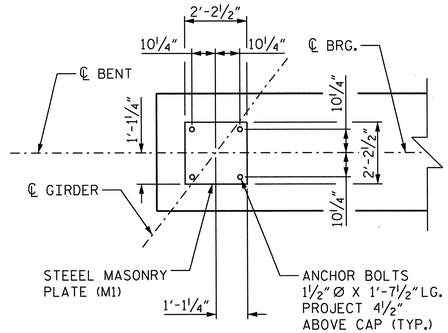

DETAIL A

PROJECT NO. U-2524C

GUILFORD COUNTY

STATION: 332+65.40 -L-

SHEET 1 of 6

STATE OF NORTH CAROLINA
DEPARTMENT OF TRANSPORTATION
RALEIGH

SUBSTRUCTURE

BENT #1
(STAGE I CONST.)

REVISIONS						SHEET NO.
NO.	BY:	DATE:	NO.	BY:	DATE:	S-571
1			3			TOTAL SHEETS
2			4			836

Stantec
Stantec Consulting Services Inc.
801 Jones Franklin Road
Suite 300
Raleigh, NC 27606
Tel. (919) 851-6866
Fax. (919) 851-7024
www.stantec.com
License No. F-0672

DRAWN BY : J. B. GEILE DATE : 04-11-13
CHECKED BY : J. T. KELVINGTON DATE : 04-11-13

DESIGN ENGINEER OF RECORD: J. T. KELVINGTON DATE : 04-16-13

SEAL 13406 JOSEPH T. KELVINGTON ENGINEER 4/16/13

U:\Structures\Y2 Horsepen Creek Rd\Drawing\Final\U-2524C_SD_B#_1.1.dgn 6/11/2013 12:00:46 PM tennis

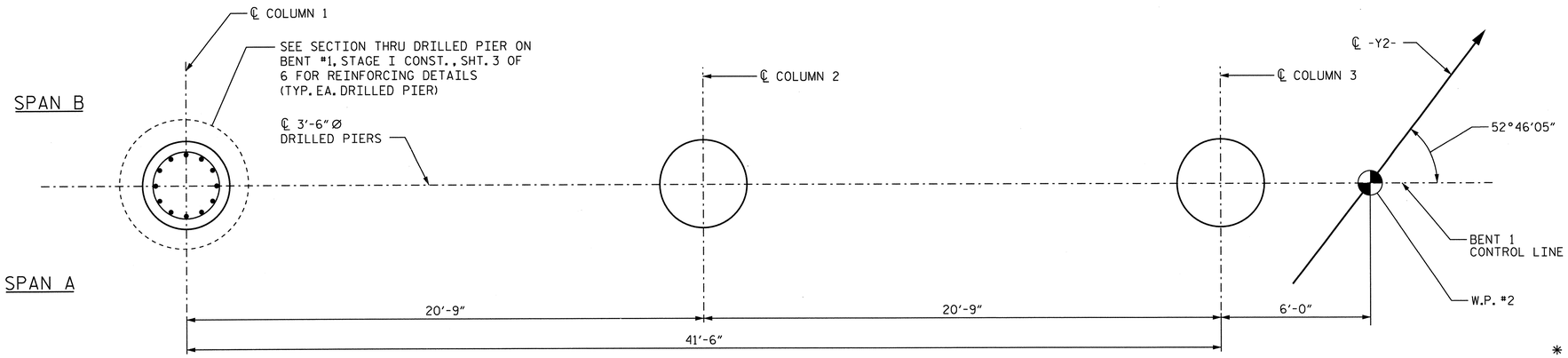

PLAN OF DRILLED PIERS

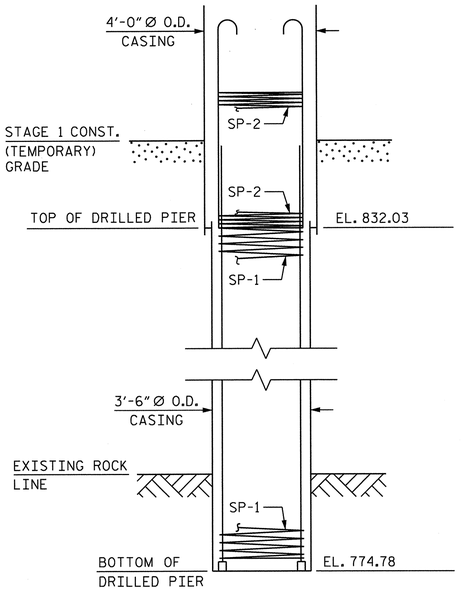

STEP 1

1. AUGER AND INSTALL 4'-0"Ø O.D. CASING TO TOP OF DRILLED PIER ELEVATION AS SHOWN AND AS REQUIRED TO STABILIZE EXCAVATION.
2. AUGER AND INSTALL 3'-6"Ø O.D. CASING TO EXISTING ROCK LINE AS SHOWN.
3. ADVANCE DRILLED PIER EXCAVATION INTO ROCK.
4. INSTALL REBAR CAGE.

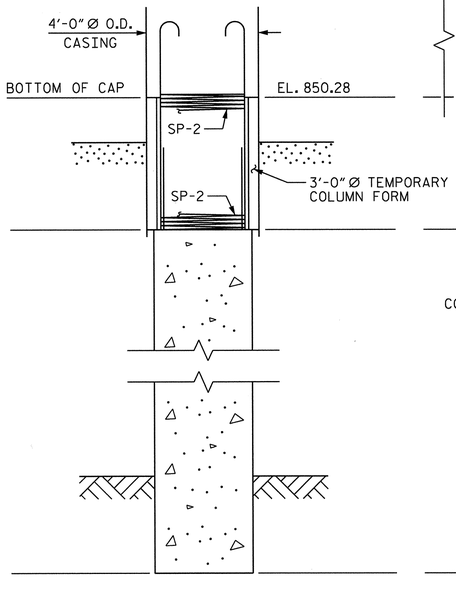

STEP 2

1. POUR DRILLED PIER CONCRETE TO TOP OF DRILLED PIER ELEVATION AS SHOWN WHILE EXTRACTING 3'-6"Ø O.D. CASING.
2. INSTALL 3'-0"Ø TEMPORARY COLUMN FORM.

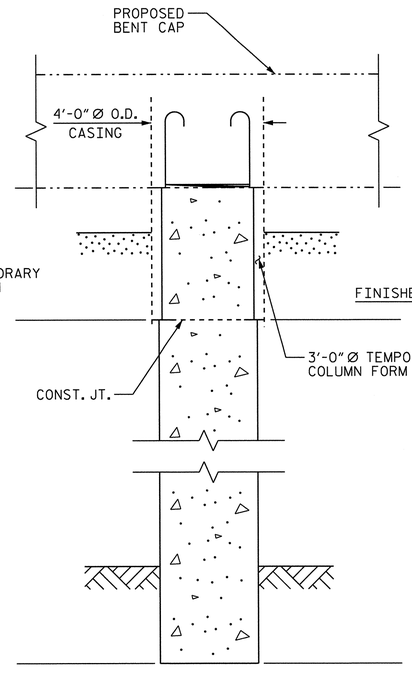

STEP 3

1. POUR CLASS A CONCRETE TO BOTTOM OF CAP ELEVATION AS SHOWN.
2. EXTRACT 4'-0"Ø O.D. CASING AFTER CLASS A CONCRETE HAS REACHED A MINIMUM COMPRESSIVE STRENGTH OF 3000 PSI.

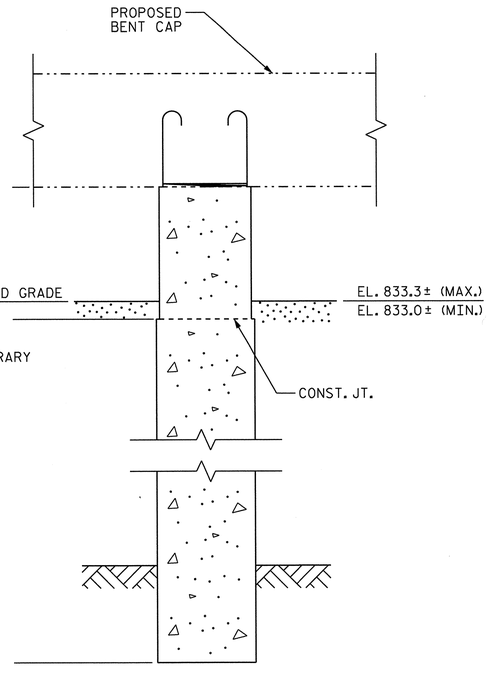

STEP 4

1. EXCAVATE ROADWAY SECTION UNDER THE BRIDGE TO FINISHED GRADE ELEVATION AS SHOWN.
2. CLEAN AND PREPARE EXPOSED COLUMN SURFACES AS NECESSARY TO ESTABLISH ACCEPTABLE FINISH AND APPEARANCE.

DRILLED PIER CONSTRUCTION SEQUENCE

(FOR ALL DRILLED PIERS AND COLUMNS)

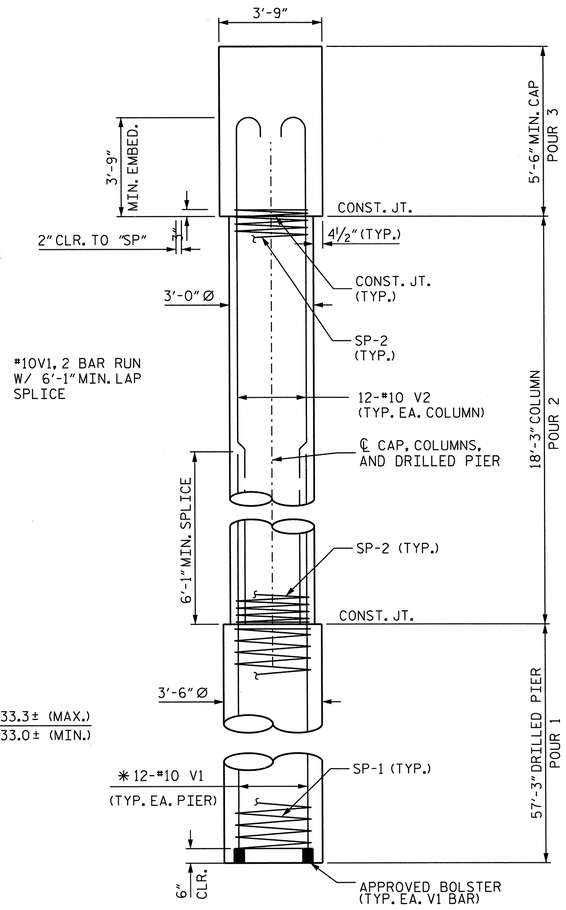

✱ #10V1, 2 BAR RUN W/ 6'-1" MIN. LAP SPLICE

END ELEVATION

NOTE: FOR SECTIONS THRU DRILLED PIERS AND COLUMNS, SEE BENT #1 (STAGE I CONST.) SHT. 3 OF 6.

PROJECT NO. U-2524C

GUILFORD COUNTY

STATION: 332+65.40 -L-

SHEET 2 of 6

STATE OF NORTH CAROLINA
DEPARTMENT OF TRANSPORTATION
RALEIGH

SUBSTRUCTURE

BENT #1
(STAGE I CONST.)

REVISIONS						SHEET NO.
NO.	BY:	DATE:	NO.	BY:	DATE:	S-572
1			3			TOTAL SHEETS
2			4			836

Stantec Consulting Services Inc.
801 Jones Franklin Road
Suite 300
Raleigh, NC 27606
Tel. (919) 851-6866
Fax. (919) 851-7024
www.stantec.com
License No. F-0672

DRAWN BY : J. B. GEILE DATE : 04-11-13
CHECKED BY : J. T. KELVINGTON DATE : 04-11-13

DESIGN ENGINEER OF RECORD: J. T. KELVINGTON DATE : 04-16-13

NORTH CAROLINA PROFESSIONAL SEAL 13406 ENGINEER JOSEPH T. KELVINGTON 12/13

U:\Structures\Y2 Horsepen Creek Rd\Drawings\Final\U-2524C_SD_B#_1_2.dgn 6/12/2013 11:20:24 AM tennis

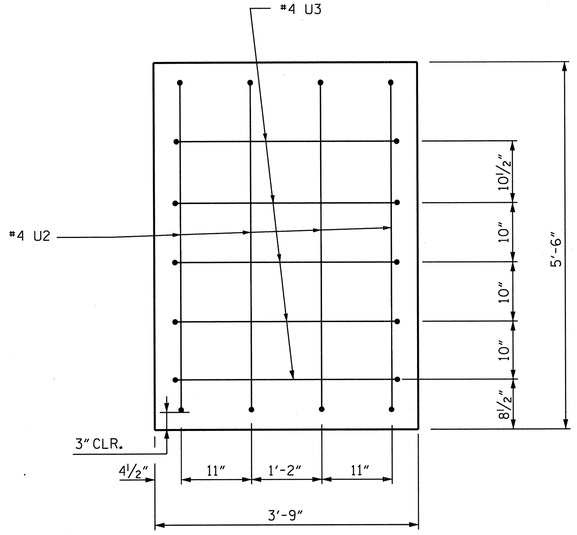

SECTION A-A

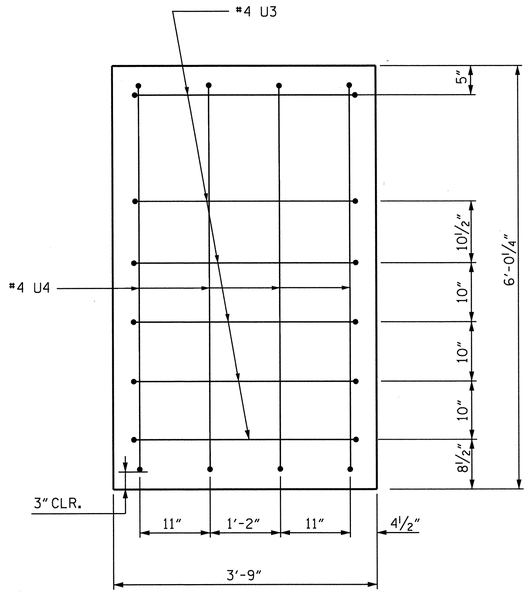

SECTION C-C

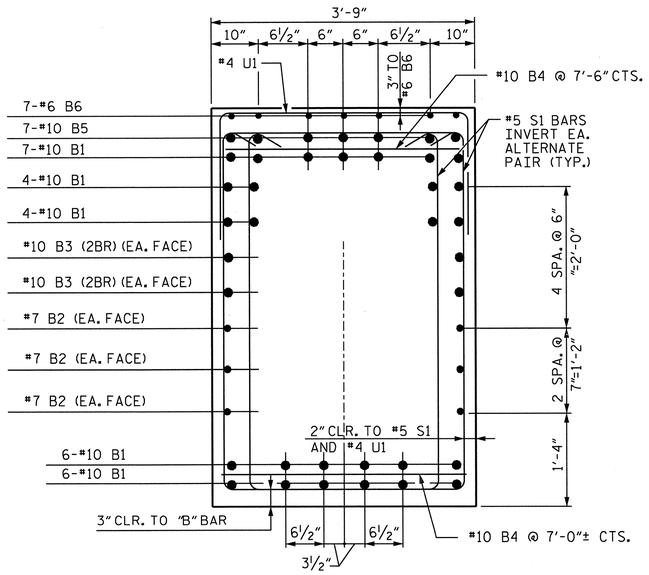

SECTION B-B

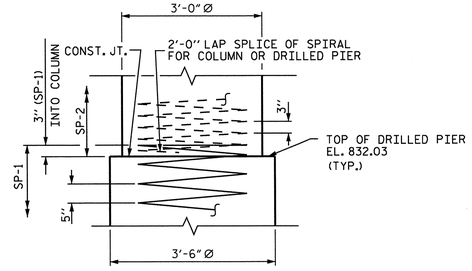

CONSTRUCTION JOINT DETAIL

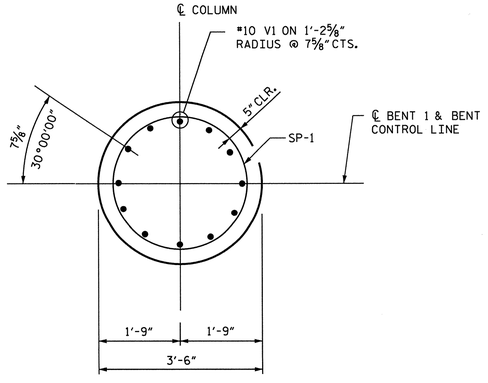

SECTION THRU DRILLED PIER
TYPICAL ALL DRILLED PIERS

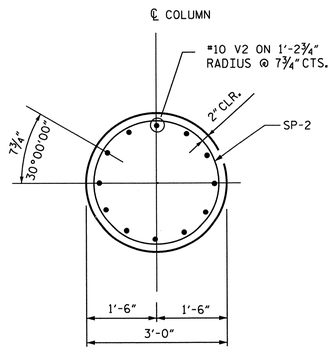

SECTION THRU COLUMN
TYPICAL ALL COLLUMNS

BAR TYPES

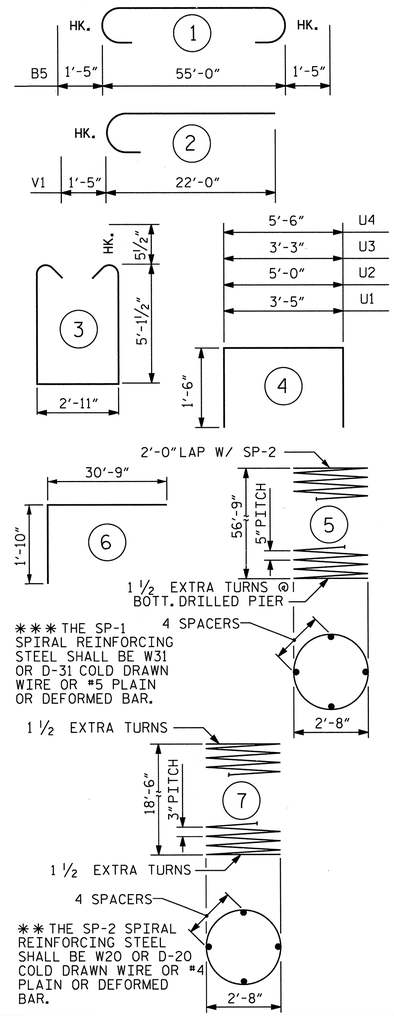

ALL BAR DIMENSIONS ARE OUT TO OUT.

BILL OF MATERIAL

BENT #1 - STAGE I

BAR	NO.	SIZE	TYPE	LENGTH	WEIGHT
B1	27	10	STR.	55'-0"	6390
B2	6	7	STR.	55'-0"	675
B3	8	10	6	32'-7"	1122
B4	15	10	STR.	3'-5"	221
B5	7	10	1	57'-10"	1742
B6	7	6	STR.	29'-6"	310
B7	7	6	STR.	4'-0"	42
S1	160	5	3	14'-1"	2350
U1	50	4	4	6'-5"	214
U2	4	4	4	8'-0"	21
U3	11	4	4	6'-3"	46
U4	4	4	4	8'-6"	23
V1	72	10	STR.	34'-6"	10689
V2	36	10	2	23'-5"	3627

REINFORCING STEEL		LBS.	27472
SP-1	3	***	5	1134'-7"	6957
SP-2	3	**	7	635'-4"	1273

SPIRAL COLUMN		
REINFORCING STEEL	LBS.	8230
DRILLED PIER CONC BREAKDOWN:		
POUR 1 DRILLED PIERS	C. Y.	61.2
3'-6"DIA DRILLED PIERS		
IN SOIL	LIN. FT.	137.8
3'-6"DIA DRILLED PIERS		
NOT IN SOIL	LIN. FT.	34.0
CLASS A CONCRETE BREAKDOWN		
POUR #2 COLUMNS	C. Y.	14.3
POUR #3 CAP	C. Y.	117.5
TOTAL CLASS A CONC.	C. Y.	131.8
SID INSPECTIONS	EA.	1
CS TUBES	LIN. FT.	705.0
CSL TESTING	EA.	1
COLUMN EXCAVATION	LIN. FT.	48.8

PROJECT NO. U-2524C

GUILFORD COUNTY

STATION: 332+65.40 -L-

SHEET 3 of 6

STATE OF NORTH CAROLINA
DEPARTMENT OF TRANSPORTATION
RALEIGH

SUBSTRUCTURE

BENT #1
(STAGE I CONST.)

REVISIONS						SHEET NO.
NO.	BY:	DATE:	NO.	BY:	DATE:	S-573
1			3			TOTAL SHEETS
2			4			836

Stantec Consulting Services Inc.
801 Jones Franklin Road
Suite 300
Raleigh, NC 27606
Tel. (919) 851-6866
Fax. (919) 851-7024
www.stantec.com
License No. F-0672

DRAWN BY : V. T. DOAN DATE : 04-11-13
CHECKED BY : S. S. YUEN DATE : 04-11-13

DESIGN ENGINEER OF RECORD: J. T. KELVINGTON DATE : 04-16-13

NORTH CAROLINA PROFESSIONAL SEAL 13406 ENGINEER JOSEPH T. KELVINGTON

U:\Structures\Y2 Horsepen Creek Rd\Drawing\Final\U-2524C_SD_B#_1_3.dgn 6/11/2013 12:00:49 PM tennis STRUCTURES PEN TABLE.tbl Raleigh PDF Creator (Full).plt

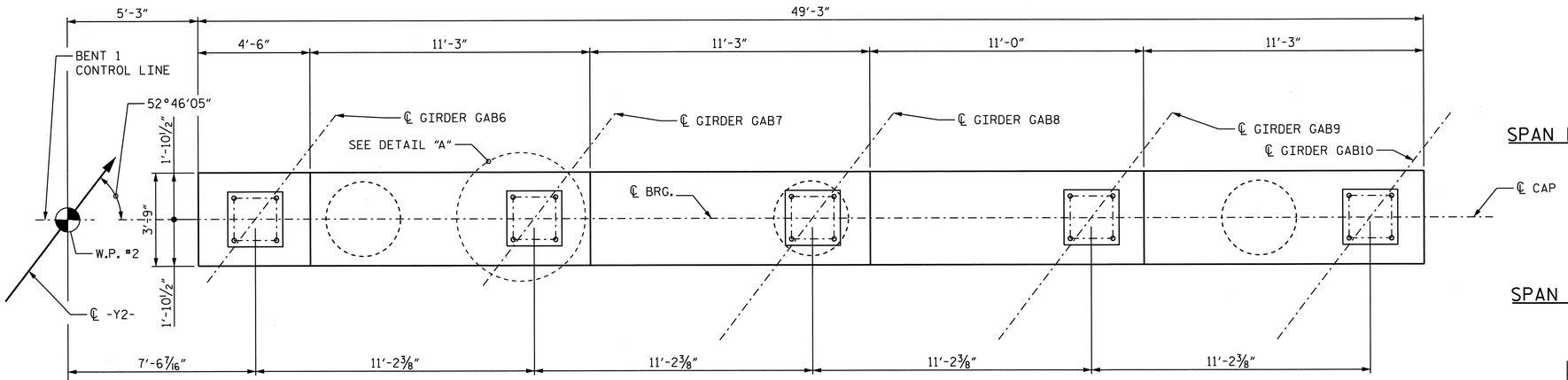

SPAN B

NOTES:

STIRRUPS IN CAP MAY BE SHIFTED AS NECESSARY TO CLEAR ANCHOR BOLTS.

HOOKS ON "V" BARS MAY BE TURNED AS NECESSARY FOR PLACING REINF. STEEL.

FOR PILE SPLICE DETAILS, SEE END BENT 1 SHT. 4 OF 4.

FOR SECTION A-A, SECTION B-B, AND SECTION C-C, SEE BENT 1 SHT. 6 OF 6.

SPAN A

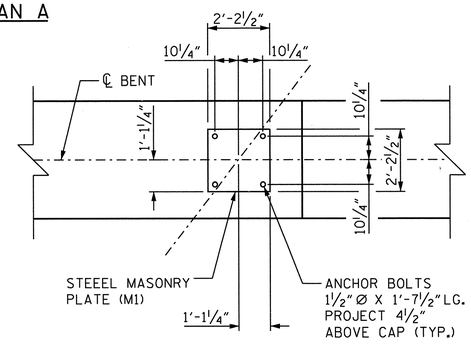

DETAIL A

PLAN

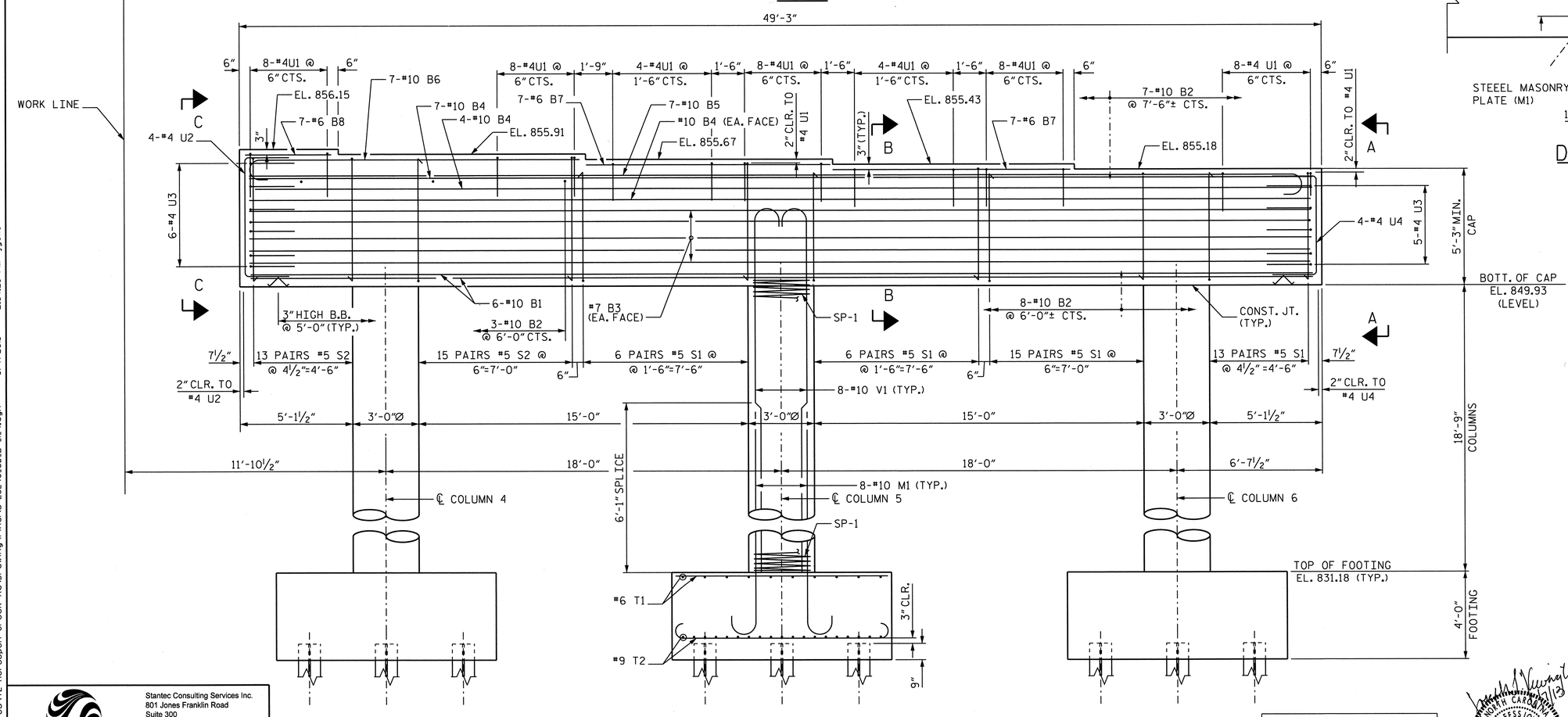

ELEVATION

NOTE: ALL COLUMN AND FOOTING DETAILS SHOWN ARE TYPICAL FOR COLUMS 4-6.

* INVERT EACH ALTERNATE STIRRUP PAIR

Stantec
Stantec Consulting Services Inc.
801 Jones Franklin Road
Suite 300
Raleigh, NC 27606
Tel. (919) 851-6866
Fax. (919) 851-7024
www.stantec.com
License No. F-0672

DRAWN BY : V. T. DOAN DATE : 04-15-13
CHECKED BY : J. T. KELVINGTON DATE : 04-15-13
DESIGN ENGINEER OF RECORD: J. T. KELVINGTON DATE : 04-16-13

PROJECT NO. U-2524C
GUILFORD COUNTY
STATION: 332+65.40 -L-

SHEET 4 of 6

STATE OF NORTH CAROLINA
DEPARTMENT OF TRANSPORTATION
RALEIGH

SUBSTRUCTURE

BENT #1
(STAGE II CONST.)

REVISIONS						SHEET NO.
NO.	BY:	DATE:	NO.	BY:	DATE:	S-574
1			3			TOTAL SHEETS
2			4			836

U:\Structures\V2 Horsepen Creek Rd\Drawing\Final\U-2524C_SD_B*_1_4.dgn 6/7/2013 2:54:23 PM jgelle

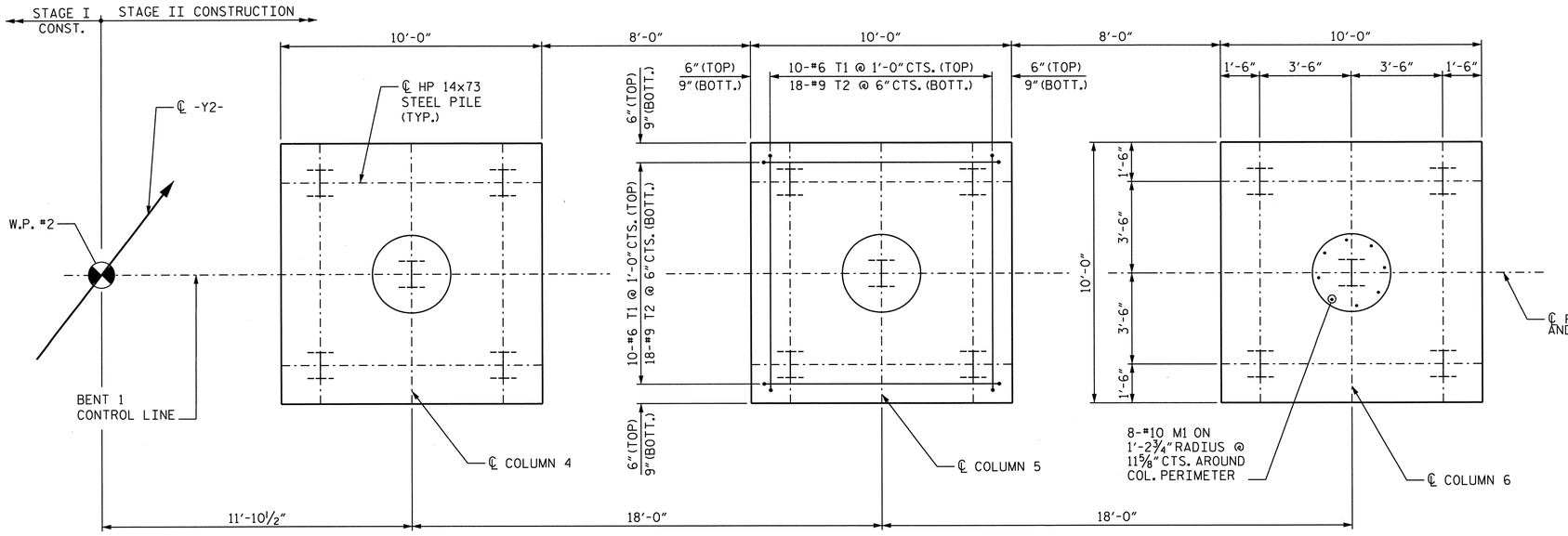

PLAN OF FOOTING

NOTE: M1 BARS SHOWN ARE TYPICAL FOR EACH COLUMN.

REINFORCING SHOWN IS TYPICAL FOR EACH FOOTING.

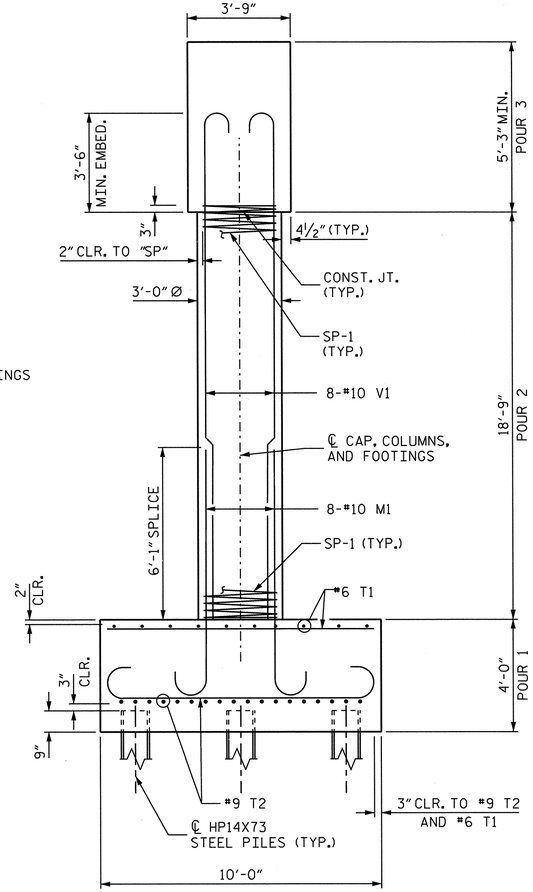

END ELEVATION

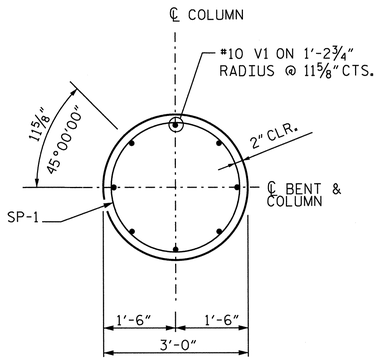

SECTION THRU COLUMN TYPICAL ALL COLUMNS

PROJECT NO. U-2524C

GUILFORD COUNTY

STATION: 332+65.40 -L-

SHEET 5 of 6

STATE OF NORTH CAROLINA
DEPARTMENT OF TRANSPORTATION
RALEIGH

SUBSTRUCTURE

BENT #1
(STAGE II CONST.)

REVISIONS						SHEET NO.
NO.	BY:	DATE:	NO.	BY:	DATE:	S-575
1			3			TOTAL SHEETS
2			4			836

SEAL 13406 JOSEPH T. KELVINGTON ENGINEER NORTH CAROLINA PROFESSIONAL

Stantec
Stantec Consulting Services Inc.
801 Jones Franklin Road
Suite 300
Raleigh, NC 27606
Tel. (919) 851-6866
Fax. (919) 851-7024
www.stantec.com
License No. F-0672

DRAWN BY : J. B. GEILE DATE : 04-11-13
CHECKED BY : J. T. KELVINGTON DATE : 04-11-13

DESIGN ENGINEER OF RECORD: J. T. KELVINGTON DATE : 04-16-13

U:\Structures\V2 Horsepen Creek Rd\Drawing\Final\U-2524C_SD_B#_1_5.dgn 6/7/2013 2:54:25 PM Jgelle

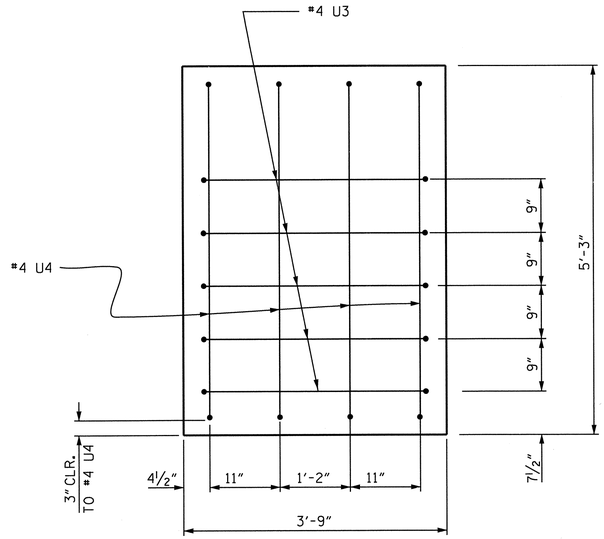

SECTION A-A

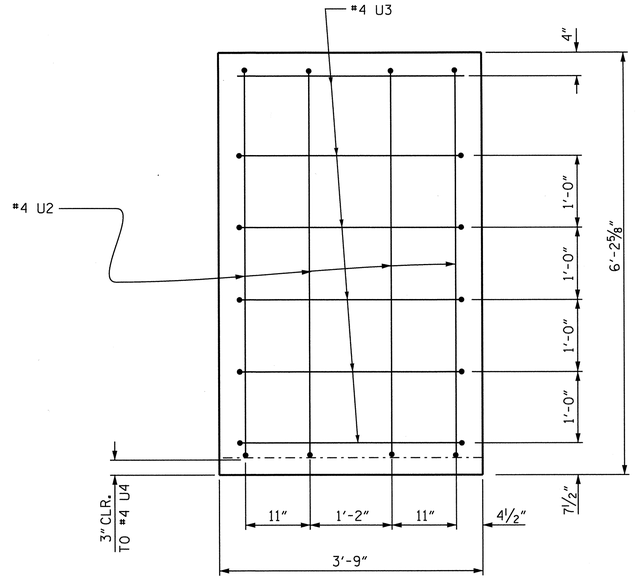

SECTION C-C

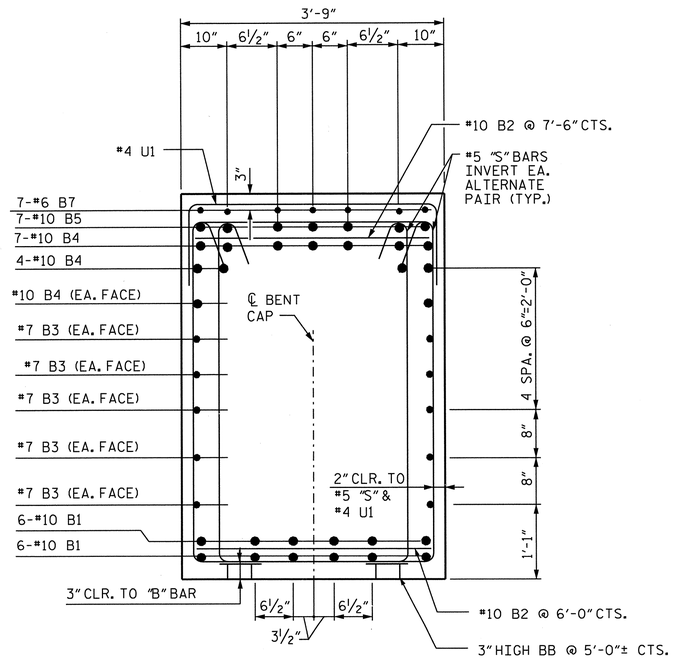

SECTION B-B

BAR TYPES

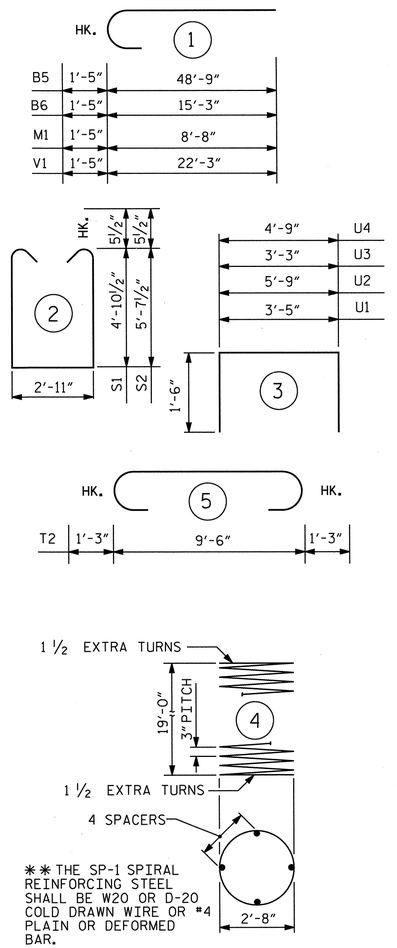

** THE SP-1 SPIRAL REINFORCING STEEL SHALL BE W20 OR D-20 COLD DRAWN WIRE OR #4 PLAIN OR DEFORMED BAR.

ALL BAR DIMENSIONS ARE OUT TO OUT.

BILL OF MATERIAL

BENT #1 - STAGE II

BAR	NO.	SIZE	TYPE	LENGTH	WEIGHT
B1	12	10	STR.	48'-9"	2517
B2	18	10	STR.	3'-5"	265
B3	10	7	STR.	48'-9"	996
B4	13	10	STR.	48'-3"	2699
B5	7	10	1	50'-2"	1511
B6	7	10	1	16'-8"	502
B7	14	6	STR.	11'-3"	237
B8	7	6	STR.	4'-0"	42
M1	24	10	1	10'-1"	1041
S1	80	5	2	13'-7"	1133
S2	56	5	2	15'-0"	876
T1	60	6	STR.	9'-6"	856
T2	108	9	5	12'-0"	4406
U2	4	4	3	8'-9"	23
U3	11	4	3	6'-3"	46
U4	4	4	3	7'-9"	21
V1	24	10	1	23'-8"	2444
REINFORCING STEEL				LBS.	19615
SP-1	3	**	4	651'-10"	1306
SPIRAL COLUMN REINFORCING STEEL				LBS.	1306

CLASS A CONCRETE BREAKDOWN:

POUR #1 FOOTINGS	C. Y.	44.4
POUR #2 COLUMNS	C. Y.	14.7
POUR #3 CAP	C. Y.	117.5
TOTAL	C. Y.	176.6
PILE EXCAVATION:		
IN SOIL	LIN. FT.	120
NOT IN SOIL	LIN. FT.	150
PILE POINTS	EA.	15
HP 14 X 73 STEEL PILES		
NO. 15	FT.	300.00
FOUNDATION EXCAVATION		LUMP SUM

PROJECT NO. U-2524C

GUILFORD COUNTY

STATION: 332+65.40 -L-

SHEET 6 of 6

STATE OF NORTH CAROLINA
DEPARTMENT OF TRANSPORTATION
RALEIGH

SUBSTRUCTURE

BENT #1
(STAGE II CONST.)

REVISIONS						SHEET NO.
NO.	BY:	DATE:	NO.	BY:	DATE:	S-576
1			3			TOTAL SHEETS
2			4			836

Stantec
Stantec Consulting Services Inc.
801 Jones Franklin Road
Suite 300
Raleigh, NC 27606
Tel. (919) 851-6866
Fax. (919) 851-7024
www.stantec.com
License No. F-0672

DRAWN BY : J. B. GEILE DATE : 04-11-13
CHECKED BY : S. S. YUEN DATE : 04-11-13
DESIGN ENGINEER OF RECORD: J. T. KELVINGTON DATE : 04-16-13

NORTH CAROLINA PROFESSIONAL SEAL 13406 ENGINEER JOSEPH T. KELVINGTON 6/7/13

U:\Structures\V2 Horsepen Creek Rd\Drawing\Final\U-2524C_SD_B*_1_6.dgn 6/7/2013 2:54:27 PM jgeile STRUCTURES PEN TABLE.tbl Raleigh PDF Creator (Full).plt

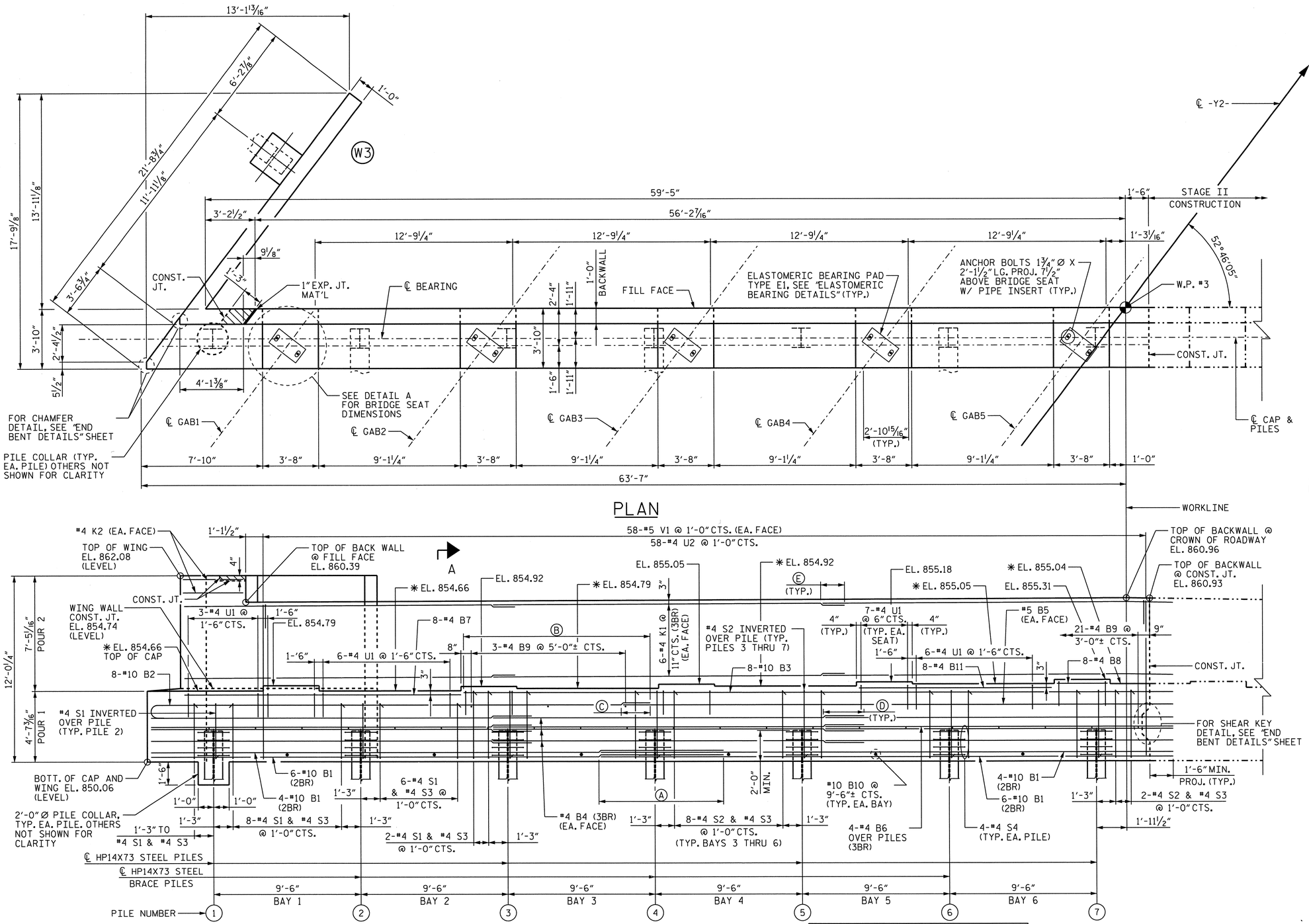

ELEVATION

* FOR TOP OF CAP ELEV. LOCATION, SEE SECTION B-B ON "END BENT 2 DETAILS", SHEET 4 OF 5.

DIM.	BAR	MIN. SPLICE
(A)	B1	7'-11"
(B)	B2	11'-1"
(C)	B5	1'-9"
(D)	B4, B6	2'-5"
(E)	K1	1'-5"

REINFORCING BAR SPLICES

DETAIL A

NOTES

STIRRUPS IN THE CAP MAY BE SHIFTED AS NECESSARY TO CLEAR PIPE INSERTS.

FOR PIPE INSERT DETAILS SEE BEARINGS SHEET.

BACKWALL SHALL BE PLACED BEFORE APPLYING THE EPOXY PROTECTIVE COATING.

THE TOP SURFACE AREAS OF THE END BENT CAPS SHALL BE CURED IN ACCORDANCE WITH THE STANDARD SPECIFICATIONS EXCEPT THE MEMBRANE CURING COMPOUND SHALL NOT BE USED.

THE TOP SURFACE OF THE CAP EXCEPT THE BRIDGE SEAT BUILDUPS SHALL BE SLOPED TRANSVERSELY FROM THE FILL FACE TO THE BACK FACE AT THE RATE OF 2%.

THE CONCRETE IN THE SHADED AREA OF THE WING WALL SHALL BE POURED AFTER THE PARAPET AND END POST ARE CAST IF SLIP FORMING IS USED.

INSTALL THE 4" DIA. DRAIN PIPE THROUGH THE WING WALL AS REQUIRED FOR REINFORCED BRIDGE APPROACH FILLS. SEE THE ROADWAY PLANS. REIFORCING STEEL IN THE WING WALL MAY BE SHIFTED AS NECESSARY TO CLEAR THE DRAIN PIPE.

EPOXY COAT THE END BENT CAP AFTER ADJUSTMENTS ARE MADE TO BEARING AND ANCHOR BOLTS ARE GROUTED.

2BR DENOTES 2 BAR RUN.

3BR DENOTES 3 BAR RUN.

PILE CUT OFF ELEVATION = 852.06 (TYP.)

PROJECT NO. U-2524C

GUILFORD COUNTY

STATION: 332+65.40 -L-

SHEET 1 of 5

STATE OF NORTH CAROLINA
DEPARTMENT OF TRANSPORTATION
RALEIGH

SUBSTRUCTURE

END BENT 2
(STAGE I CONST.)

REVISIONS						SHEET NO.
NO.	BY:	DATE:	NO.	BY:	DATE:	S-577
1			3			TOTAL SHEETS
2			4			836

Stantec Consulting Services Inc.
801 Jones Franklin Road
Suite 300
Raleigh, NC 27606
Tel. (919) 851-6866
Fax. (919) 851-7024
www.stantec.com
License No. F-0672

DRAWN BY : V. T. DOAN DATE : 03-15-13
CHECKED BY : J. T. KELVINGTON DATE : 03-16-13
DESIGN ENGINEER OF RECORD: J. T. KELVINGTON DATE : 04-16-13

NORTH CAROLINA PROFESSIONAL SEAL 13406 ENGINEER JOSEPH T. KELVINGTON 4/17/13

U:\Structures\Y2 Horsepen Creek Rd\Drawing\Final\U-2524C_SD_EB*2.dgn 6/7/2013 2:54:30 PM jgelle

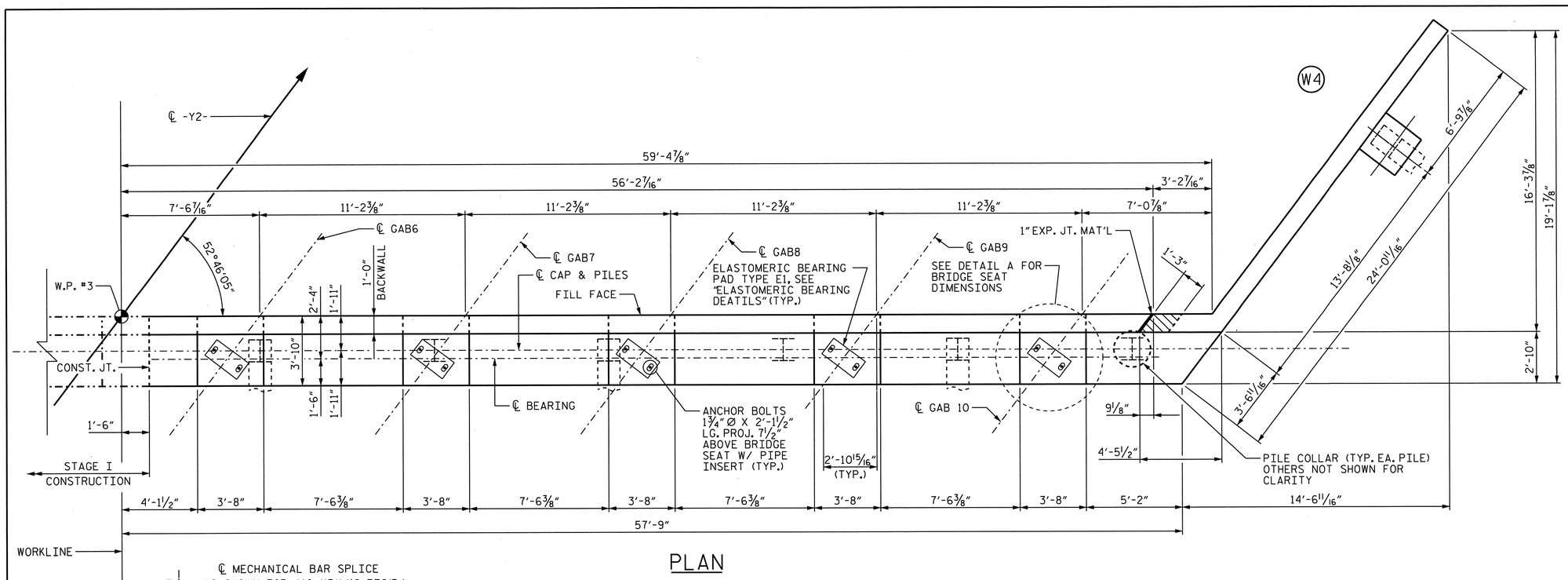

PLAN

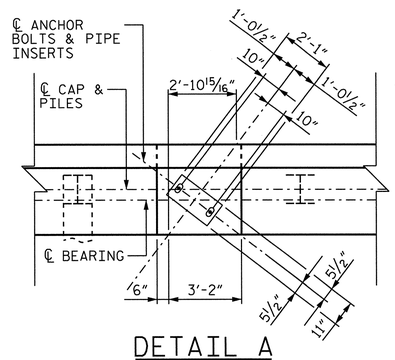

DETAIL A

NOTES

FOR NOTES, SEE "END BENT 2 (STAGE I CONST.)".

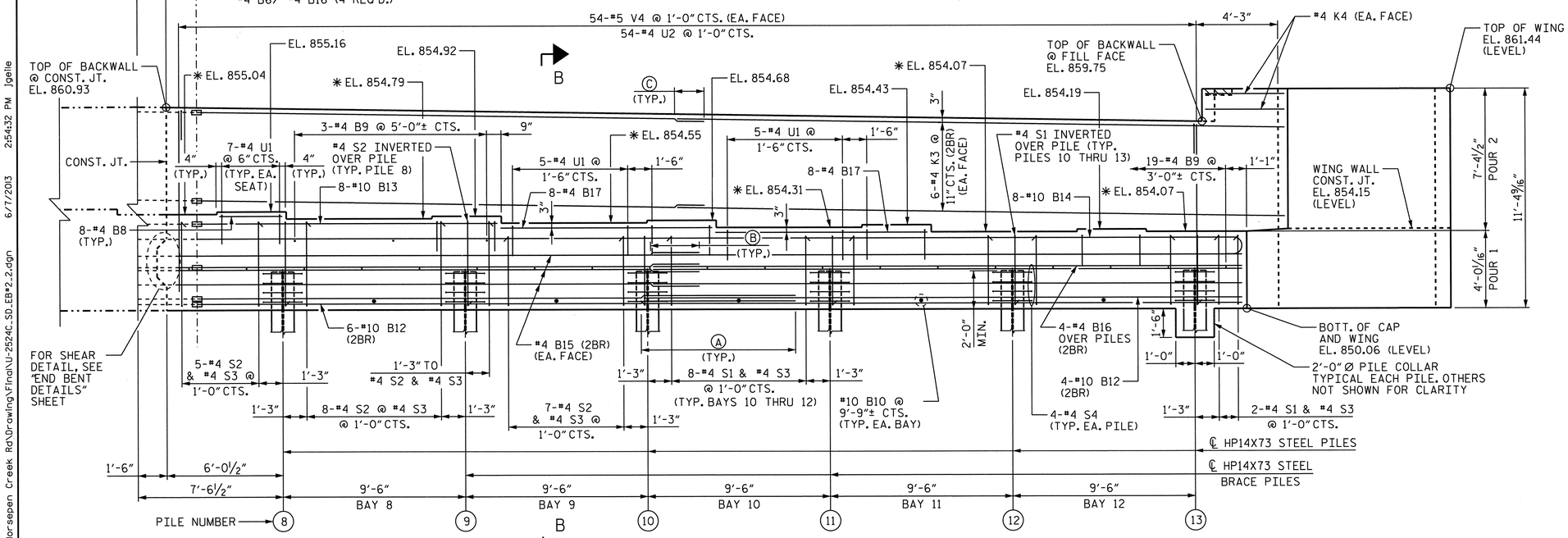

ELEVATION

*FOR TOP OF CAP ELEV. LOCATION, SEE SECTION B-B ON "END BENT 2 DETAILS", SHEET 4 OF 5.

DIM.	BAR	MIN. SPLICE
A	B12	7'-11"
B	B15, B16	2'-5"
C	K3	1'-5"

REINFORCING BAR SPLICES

PROJECT NO. U-2524C

GUILFORD COUNTY

STATION: 332+65.40 -L-

SHEET 2 of 5

STATE OF NORTH CAROLINA
DEPARTMENT OF TRANSPORTATION
RALEIGH

SUBSTRUCTURE

END BENT 2
(STAGE II CONST.)

REVISIONS						SHEET NO.
NO.	BY:	DATE:	NO.	BY:	DATE:	S-578
1			3			TOTAL SHEETS
2			4			836

Stantec Consulting Services Inc.
801 Jones Franklin Road
Suite 300
Raleigh, NC 27606
Tel. (919) 851-6866
Fax. (919) 851-7024
www.stantec.com
License No. F-0672

DRAWN BY : V. T. DOAN DATE : 03-15-13
CHECKED BY : J. T. KELVINGTON DATE : 03-16-13

DESIGN ENGINEER OF RECORD: J. T. KELVINGTON DATE : 04-16-13

NORTH CAROLINA PROFESSIONAL SEAL 13406 ENGINEER JOSEPH T. KELVINGTON 4/17/13

U:\Structures\Y2 Horsepen Creek Rd\Drawing\Final\U-2524C_SD_EB#2_2.dgn 6/7/2013 2:54:32 PM jgelle

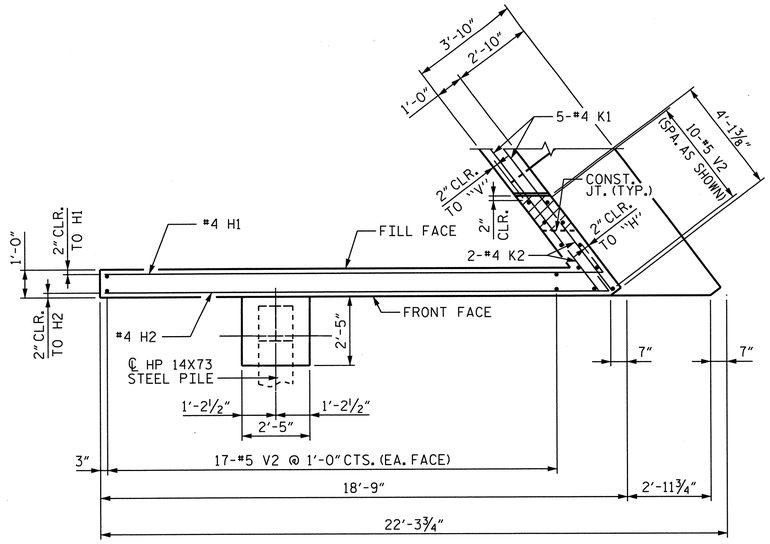

PLAN OF LEFT WING (W3)

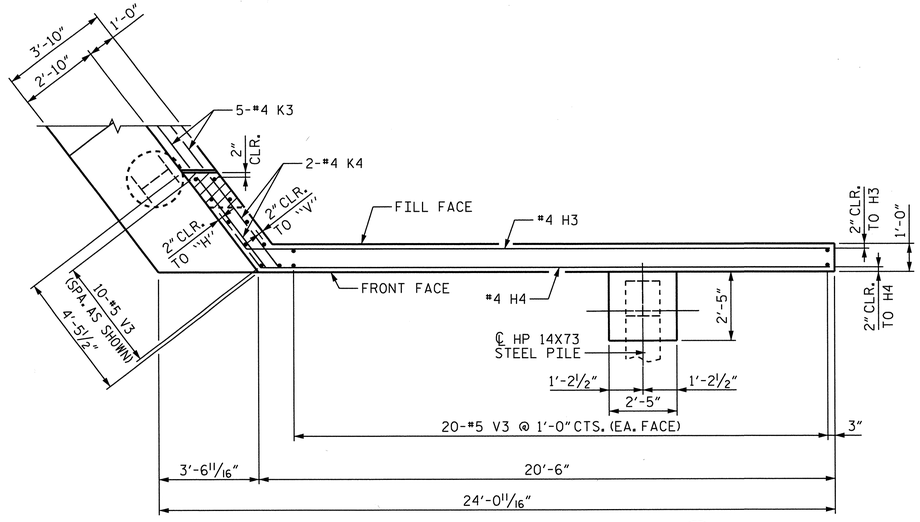

PLAN OF RIGHT WING (W4)

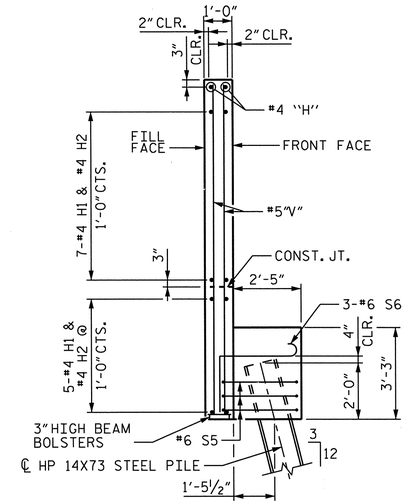

SECTION E-E

ELEVATION OF LEFT WING (W3)

ELEVATION OF RIGHT WING (W4)

SECTION F-F

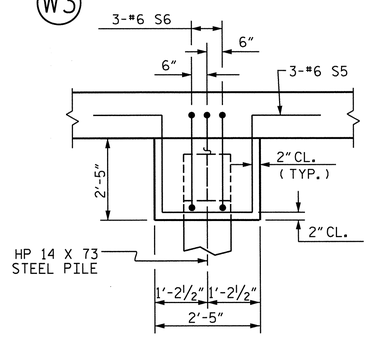

WING WALL PILE DETAIL

PROJECT NO. U-2524C

GUILFORD COUNTY

STATION: 332+65.40 -L-

SHEET 3 OF 5

STATE OF NORTH CAROLINA
DEPARTMENT OF TRANSPORTATION
RALEIGH

SUBSTRUCTURE

END BENT 2
WING WALL DETAILS

REVISIONS						SHEET NO.
NO.	BY:	DATE:	NO.	BY:	DATE:	S-579
1			3			TOTAL SHEETS
2			4			836

NORTH CAROLINA PROFESSIONAL SEAL 13406 ENGINEER JOSEPH T. KELVINGTON 6/16

Stantec Consulting Services Inc.
801 Jones Franklin Road
Suite 300
Raleigh, NC 27606
Tel. (919) 851-6866
Fax. (919) 851-7024
www.stantec.com
License No. F-0672

DRAWN BY : J. L. HENNEKES DATE : 04-11-13
CHECKED BY : V. T. DOAN DATE : 04-11-13

DESIGN ENGINEER OF RECORD: J. T. KELVINGTON DATE : 04-16-13

U:\Structures\Y2 Horsepen Creek Rd\Drawing\Final\U-2524C_SD_EB#2_3.dgn 6/7/2013 3:56:11 PM jgellie

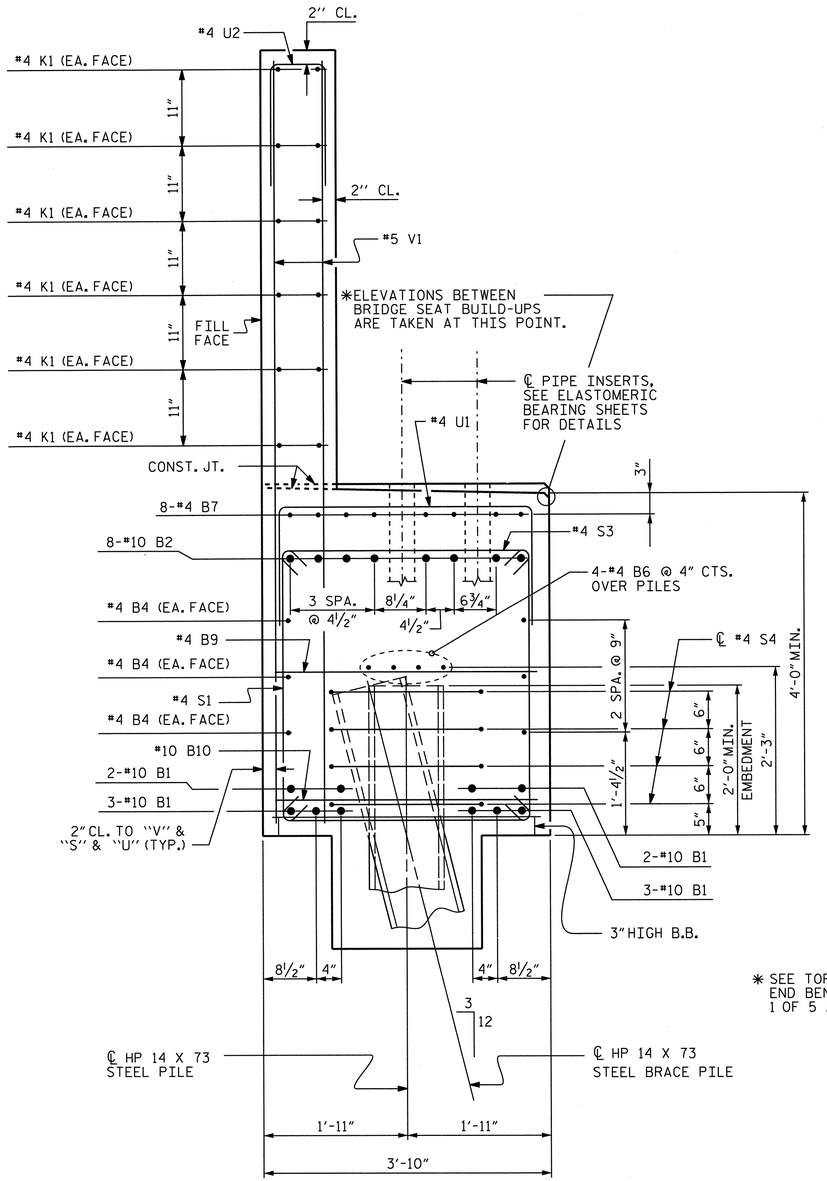

SECTION A-A

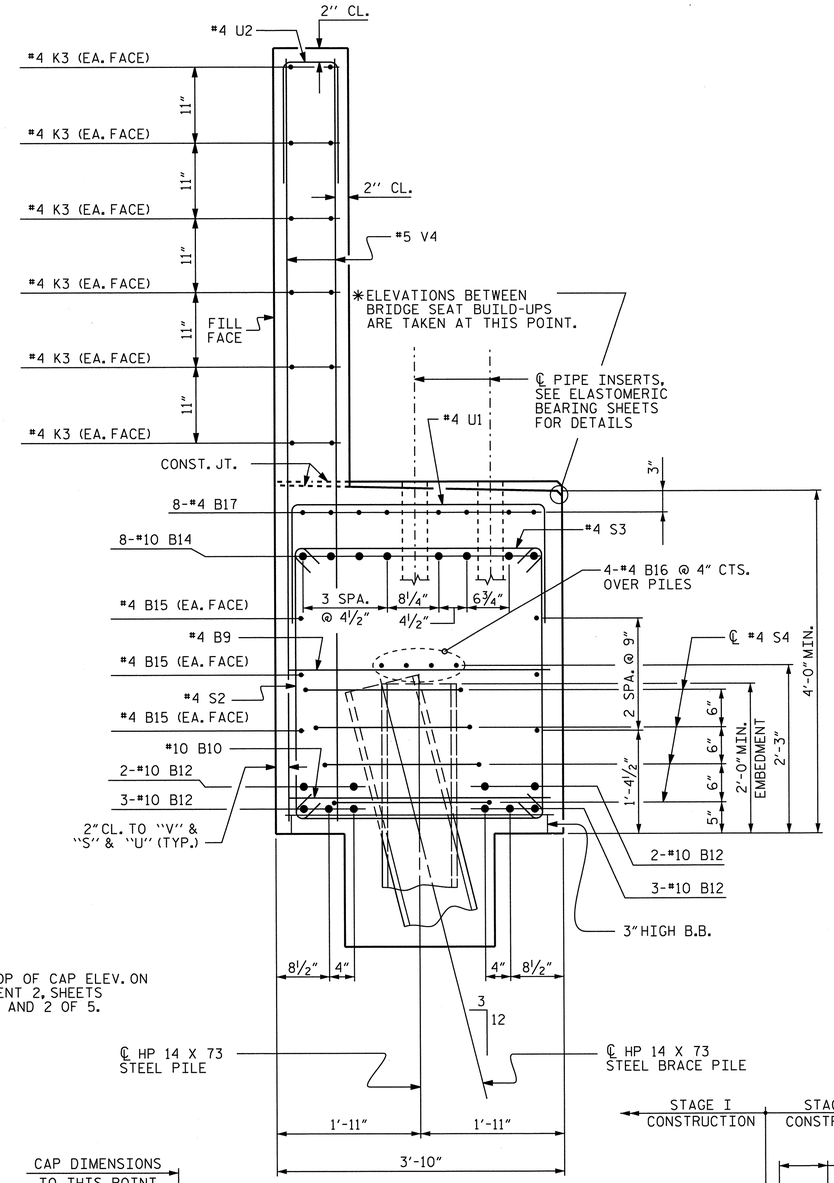

SECTION B-B

* SEE TOP OF CAP ELEV. ON END BENT 2, SHEETS 1 OF 5 AND 2 OF 5.

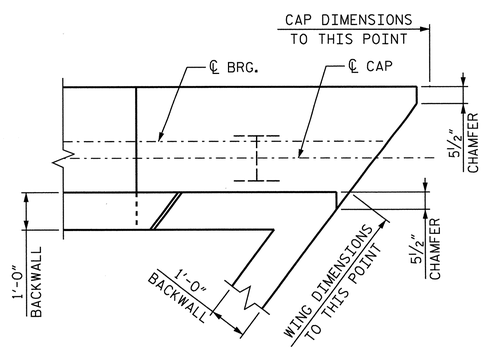

CHAMFER DETAIL

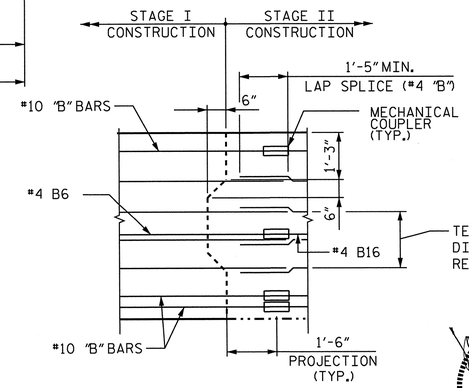

SHEAR KEY DETAIL

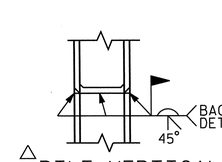

△ PILE VERTICAL

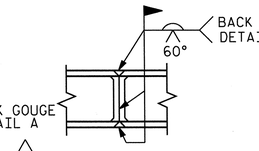

△ PILE HORIZONTAL OR VERTICAL

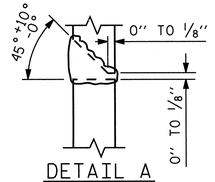

DETAIL A

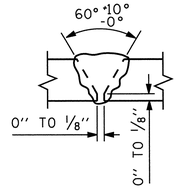

DETAIL B

△ POSITION OF PILE DURING WELDING.

PILE SPLICE DETAILS

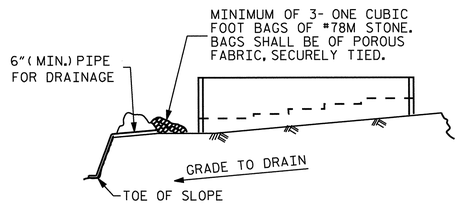

BAGGED STONE AND PIPE SHALL BE PLACED IMMEDIATELY AFTER COMPLETION OF END BENT EXCAVATION. PIPE MAY BE EITHER CONCRETE, CORRUGATED STEEL, CORRUGATED ALUMINUM ALLOY, OR CORRUGATED PLASTIC. PERFORATED PIPE WILL NOT BE ALLOWED.

BAGGED STONE SHALL REMAIN IN PLACE UNTIL THE ENGINEER DIRECTS THAT IT BE REMOVED. THE CONTRACTOR SHALL REMOVE AND DISPOSE OF SILT ACCUMULATIONS AT BAGGED STONE WHEN SO DIRECTED BY THE ENGINEER. BAGS SHALL BE REMOVED AND REPLACED WHENEVER THE ENGINEER DETERMINES THAT THEY HAVE DETERIORATED AND LOST THEIR EFFECTIVENESS.

NO SEPARATE PAYMENT WILL BE MADE FOR THIS WORK AND THE ENTIRE COST OF THIS WORK SHALL BE INCLUDED IN THE UNIT CONTRACT PRICE BID FOR THE SEVERAL PAY ITEMS.

TEMPORARY DRAINAGE AT END BENT

PROJECT NO. U-2524C

GUILFORD COUNTY

STATION: 332+65.40 -L-

SHEET 4 of 5

STATE OF NORTH CAROLINA
DEPARTMENT OF TRANSPORTATION
RALEIGH

SUBSTRUCTURE

END BENT 2 DETAILS

REVISIONS						SHEET NO.
NO.	BY:	DATE:	NO.	BY:	DATE:	S-580
1			3			TOTAL SHEETS
2			4			836

Stantec Consulting Services Inc.
801 Jones Franklin Road
Suite 300
Raleigh, NC 27606
Tel. (919) 851-6866
Fax. (919) 851-7024
www.stantec.com
License No. F-0672

DRAWN BY : V. T. DOAN DATE : 04-11-13
CHECKED BY : S. S. YUEN DATE : 04-11-13

DESIGN ENGINEER OF RECORD: J. T. KELVINGTON DATE : 04-16-13

NORTH CAROLINA PROFESSIONAL SEAL 13406 ENGINEER JOSEPH T. KELVINGTON 7/12

U:\Structures\Y2 Horsepen Creek Rd\Drawing\Final\U-2524C_SD_EB#2_4.dgn 6/7/2013 2:54:39 PM Jgelle STRUCTURES PEN TABLE.tbl Raleigh PDF Creator (Full).plt

BILL OF MATERIAL
END BENT 2 - STAGE I CONSTRUCTION

BAR	NO.	SIZE	TYPE	LENGTH	WEIGHT
B1	20	10	STR.	37'-0"	3184
B2	8	10	1	30'-4"	1044
B3	8	10	STR.	45'-8"	1572
B4	18	4	STR.	23'-8"	285
B5	2	5	STR.	31'-10"	66
B6	12	4	STR.	23'-1"	185
B7	8	4	STR.	17'-4"	93
B8	8	4	STR.	3'-4"	18
B9	24	4	STR.	3'-6"	56
B10	6	10	STR.	3'-6"	90
B11	8	4	STR.	12'-5"	66
H1	13	4	7	18'-4"	159
H2	13	4	7	18'-8"	162
K1	36	4	STR.	21'-9"	523
K2	4	4	STR.	3'-7"	10
S1	17	4	3	11'-6"	131
S2	41	4	3	12'-11"	354
S3	51	4	2	4'-3"	145
S4	28	4	5	8'-4"	156
S5	1	6	9	9'-11"	15
S6	3	6	8	5'-9"	26
U1	50	4	4	7'-0"	234
U2	58	4	4	3'-4"	129
V1	116	5	STR.	9'-11"	1200
V2	44	5	STR.	11'-8"	535

REINFORCING STEEL LBS 10,438

CLASS A CONCRETE BREAKDOWN

POUR 1 - CAP, COLLAR AND LOWER WING	C.Y. 47.9
POUR 2 - BACKWALL & UPPER WING	C.Y. 18.0
CLASS A CONCRETE TOTAL	C.Y. 65.9

HP14X73 PILES

NO. 8 FEET 400.00

BILL OF MATERIAL
END BENT 2 - STAGE II CONSTRUCTION

BAR	NO.	SIZE	TYPE	LENGTH	WEIGHT
B8	8	4	STR.	3'-4"	18
B9	22	4	STR.	3'-6"	51
B10	5	10	STR.	3'-6"	75
B12	20	10	STR.	32'-6"	2797
B13	8	10	STR.	15'-9"	542
B14	8	10	1	54'-1"	1862
B15	12	4	STR.	30'-5"	244
B16	4	4	STR.	28'-5"	76
B17	16	4	STR.	10'-10"	116
H3	13	4	6	21'-3"	185
H4	13	4	6	20'-10"	181
K3	24	4	STR.	30'-1"	482
K4	4	4	STR.	3'-9"	10
S1	16	4	3	11'-6"	123
S2	36	4	3	12'-11"	311
S3	46	4	2	4'-3"	131
S4	24	4	5	8'-4"	134
S5	1	6	9	9'-11"	15
S6	3	6	8	5'-9"	26
U1	45	4	4	7'-0"	210
U2	54	4	4	5'-0"	180
V3	50	5	STR.	9'-4"	487
V4	108	5	STR.	9'-4"	1051

REINFORCING STEEL LBS 9.307

CLASS A CONCRETE BREAKDOWN

POUR 1 - CAP, COLLAR AND LOWER WING	C.Y. 42.2
POUR 2 - BACKWALL & UPPER WING	C.Y. 18.3
CLASS A CONCRETE TOTAL	C.Y. 60.5

HP14X73 PILES

NO. 7 FEET 350.00

BAR TYPES

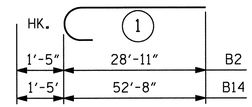

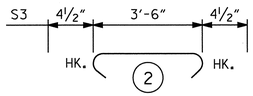

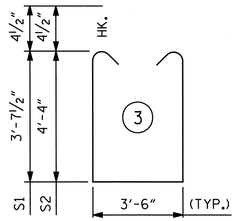

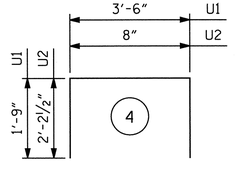

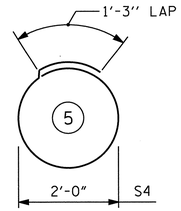

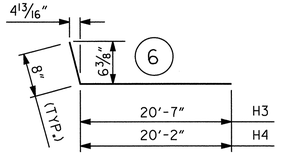

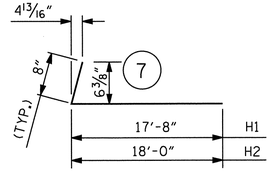

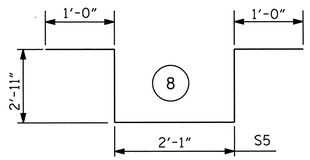

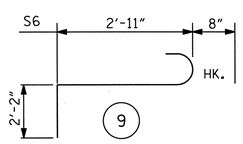

ALL BAR DIMENSIONS ARE OUT TO OUT.

PROJECT NO. U-2524C

GUILFORD COUNTY

STATION: 332+65.40 -L-

SHEET 5 of 5

STATE OF NORTH CAROLINA
DEPARTMENT OF TRANSPORTATION
RALEIGH

SUBSTRUCTURE

END BENT 2
BILL OF MATERIAL

REVISIONS						SHEET NO.
NO.	BY:	DATE:	NO.	BY:	DATE:	S-581
1			3			TOTAL SHEETS
2			4			830

Stantec
Stantec Consulting Services Inc.
801 Jones Franklin Road
Suite 300
Raleigh, NC 27606
Tel. (919) 851-6866
Fax. (919) 851-7024
www.stantec.com
License No. F-0672

DRAWN BY : V. T. DOAN DATE : 04-11-13
CHECKED BY : S. S. YUEN DATE : 04-11-13

DESIGN ENGINEER OF RECORD: J. T. KELVINGTON DATE : 04-16-13

NORTH CAROLINA PROFESSIONAL SEAL 13406 ENGINEER JOSEPH T. KELVINGTON 7/1/13

U:\Structures\Y2 Horsepen Creek Rd\Drawing\Final\U-2524C_SD_EB#2_5.dgn 6/7/2013 2:54:42 PM jgelle STRUCTURES PEN TABLE.tbl Raleigh PDF Creator (Full).plt

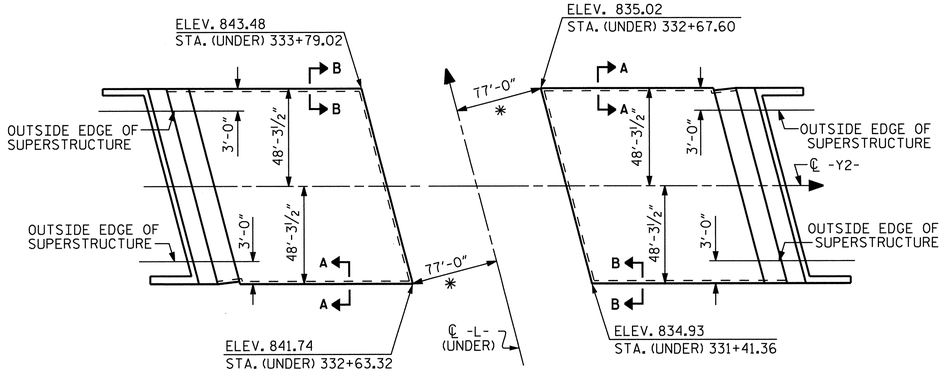

PLAN OF SLOPE PROTECTION

*RADIAL DIMENSION

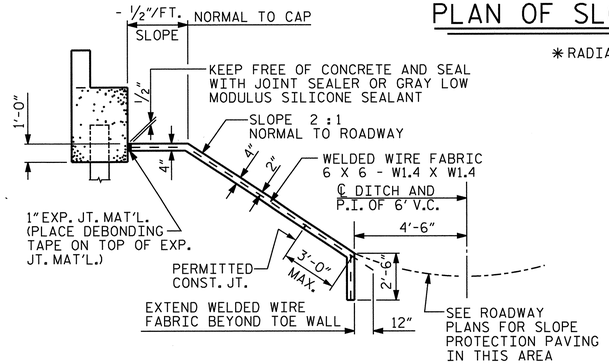

SECTION ALONG ℄ ROADWAY WHEN FILL CATCHES IN DITCH

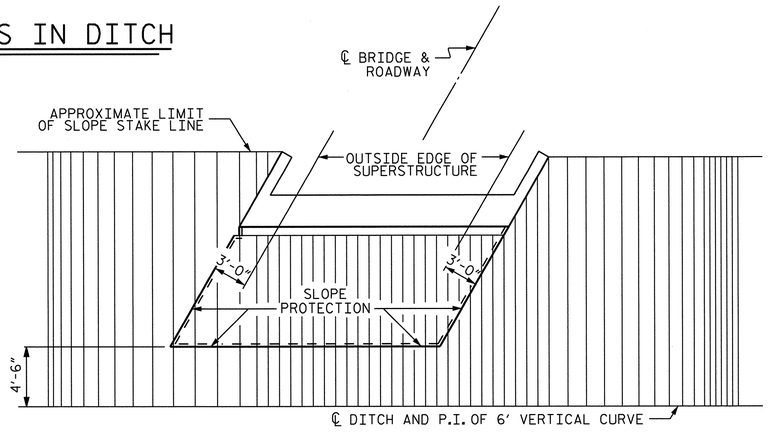

PLAN - END BENT WITH SWEPT BACK WINGS - SKEWED

(2:1 SLOPE)

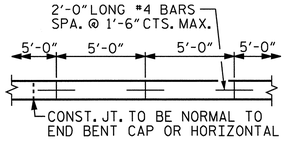

STRIP WIDTHS MAY VARY IN CURVED PORTION.

POURING DETAIL

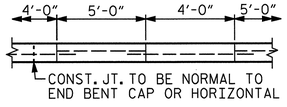

POUR A 4'-0" STRIP FIRST. STRIP WIDTHS MAY VARY IN CURVED PORTION.

OPTIONAL POURING DETAIL

GENERAL NOTES

SLOPE PROTECTION SHALL BE PLACED UNDER THE ENDS OF THE BRIDGE AS SHOWN IN THE DETAILS. FOR BERM WIDTH, SEE GENERAL DRAWING.

CONCRETE SHALL BE CLASS "B". THE CONCRETE SURFACE SHALL BE FLOATED WITH A WOODEN FLOAT AND FINISHED. WELDED WIRE FABRIC REINFORCING SHALL BE 6 X 6 - W1.4 X W1.4, 60" WIDE. SLOPE PROTECTION SHALL BE POURED IN 5' STRIPS AS SHOWN IN THE "POURING DETAIL" WITH 2'-0" LONG #4 BARS PLACED ALONG THE SLOPE BETWEEN STRIPS AT 1'-6" MAXIMUM SPACING. SLOPE PROTECTION MAY BE POURED IN ALTERNATE 4' AND 5' STRIPS AS SHOWN IN THE "OPTIONAL POURING DETAIL" WITH ADJACENT RUNS OF WELDED WIRE FABRIC LAPPING AT LEAST 6". THE COST OF THE WELDED WIRE FABRIC AND #4 BARS, IF USED, SHALL BE INCLUDED IN THE CONTRACT UNIT PRICE BID PER SQUARE YARD FOR SLOPE PROTECTION.

BRIDGE @ STA. 332+65.40 -L-	4 INCH SLOPE PROTECTION	* WELDED WIRE FABRIC 60 INCHES WIDE
	SQUARE YARDS	APPROX. L.F.
END BENT 1	482	1014
END BENT 2	643	1334

*QUANTITY SHOWN IS BASED ON 5' POURS.

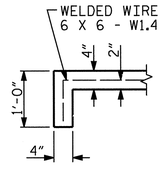

SECTION A-A

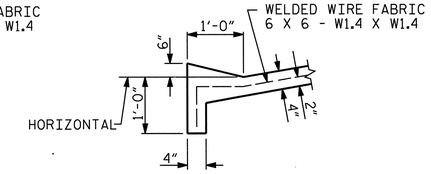

SECTION B-B

PRELIMINARY PLANS
DO NOT USE FOR CONSTRUCTION

PROJECT NO. U-2524C

GUILFORD COUNTY

STATION: 332+65.40 -L-

STATE OF NORTH CAROLINA
DEPARTMENT OF TRANSPORTATION
RALEIGH

STANDARD

SLOPE PROTECTION DETAILS

Stantec
Stantec Consulting Services Inc.
801 Jones Franklin Road
Suite 300
Raleigh, NC 27606
Tel. (919) 851-6866
Fax. (919) 851-7024
www.stantec.com
License No. F-0672

ASSEMBLED BY : J. B. GEILE	DATE : 04-11-13		
CHECKED BY : T. R. DUDECK	DATE : 04-11-13		
DRAWN BY : ELR 5/92	REV. 5/1/06	TLA/GM	DESIGN ENGINEER OF RECORD: J. T. KELVINGTON DATE : 04-16-13
CHECKED BY : GRP 6/92	REV. 10/1/11	MAA/GM	
	REV. 12/21/11	MAA/GM	

REVISIONS						SHEET NO.
NO.	BY:	DATE:	NO.	BY:	DATE:	S-582
1			3			TOTAL SHEETS
2			4			836

STD. NO. SP1

NORTH CAROLINA PROFESSIONAL SEAL 13406 ENGINEER JOSEPH T. KELVINGTON 7/1/13

U:\Structures\Y2 Horsepen Creek Rd\Drawing\Final\U-2524C_SD_SPL2.dgn 6/7/2013 2:54:48 PM jgeile STRUCTURES PEN TABLE.tbl Raleigh PDF Creator (Full).plt

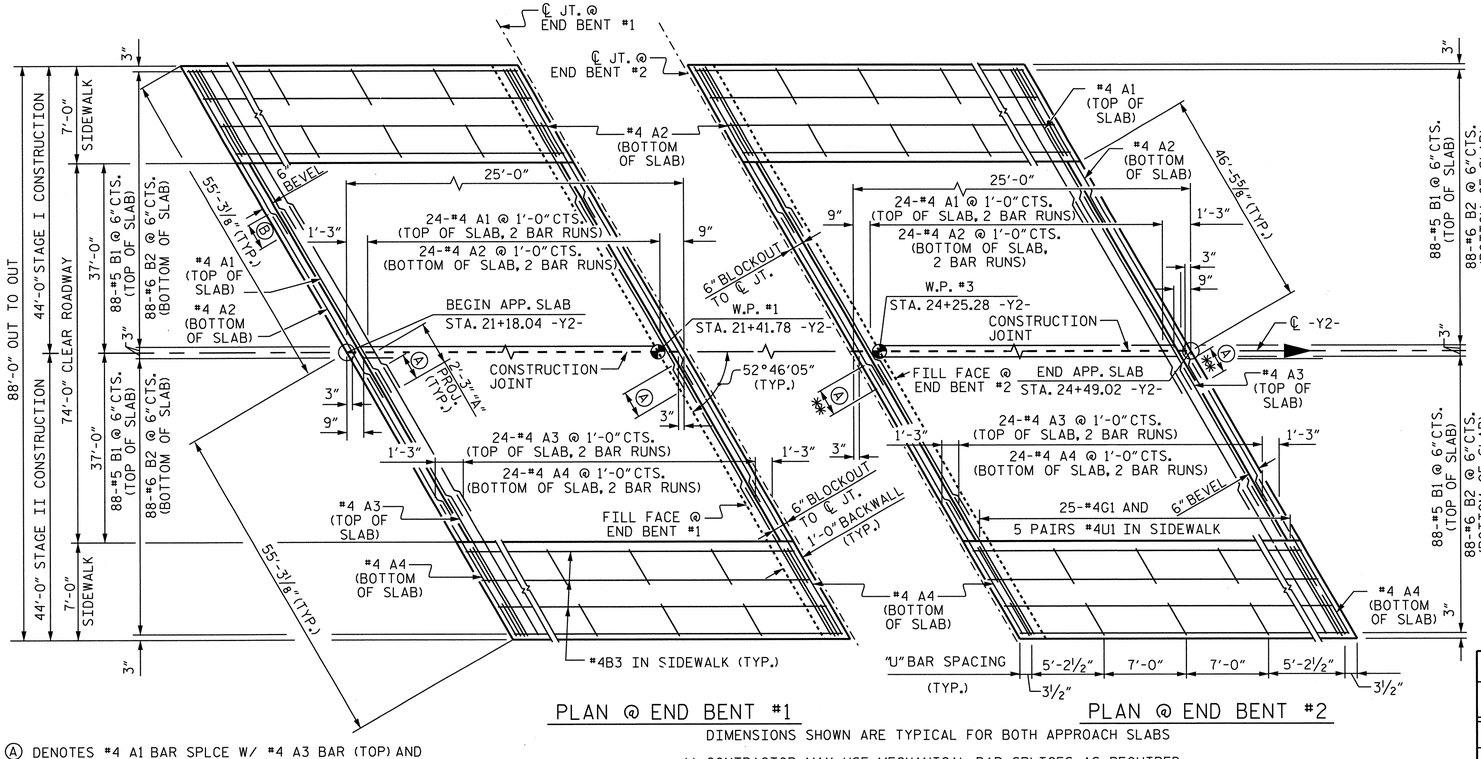

PLAN @ END BENT #1 — PLAN @ END BENT #2

DIMENSIONS SHOWN ARE TYPICAL FOR BOTH APPROACH SLABS

Ⓐ DENOTES #4 A1 BAR SPLCE W/ #4 A3 BAR (TOP) AND #4 A2 BAR SPLCE W/ #4 A4 BAR (BOTT). (TYP.)

Ⓑ DENOTES #4 "A" BAR LAP SPLCE (TYP. UNLESS NOTED OTHERWISE)

✱✱ CONTRACTOR MAY USE MECHANICAL BAR SPLICES AS REQUIRED TO CLEAR TEMPORARY SHORING

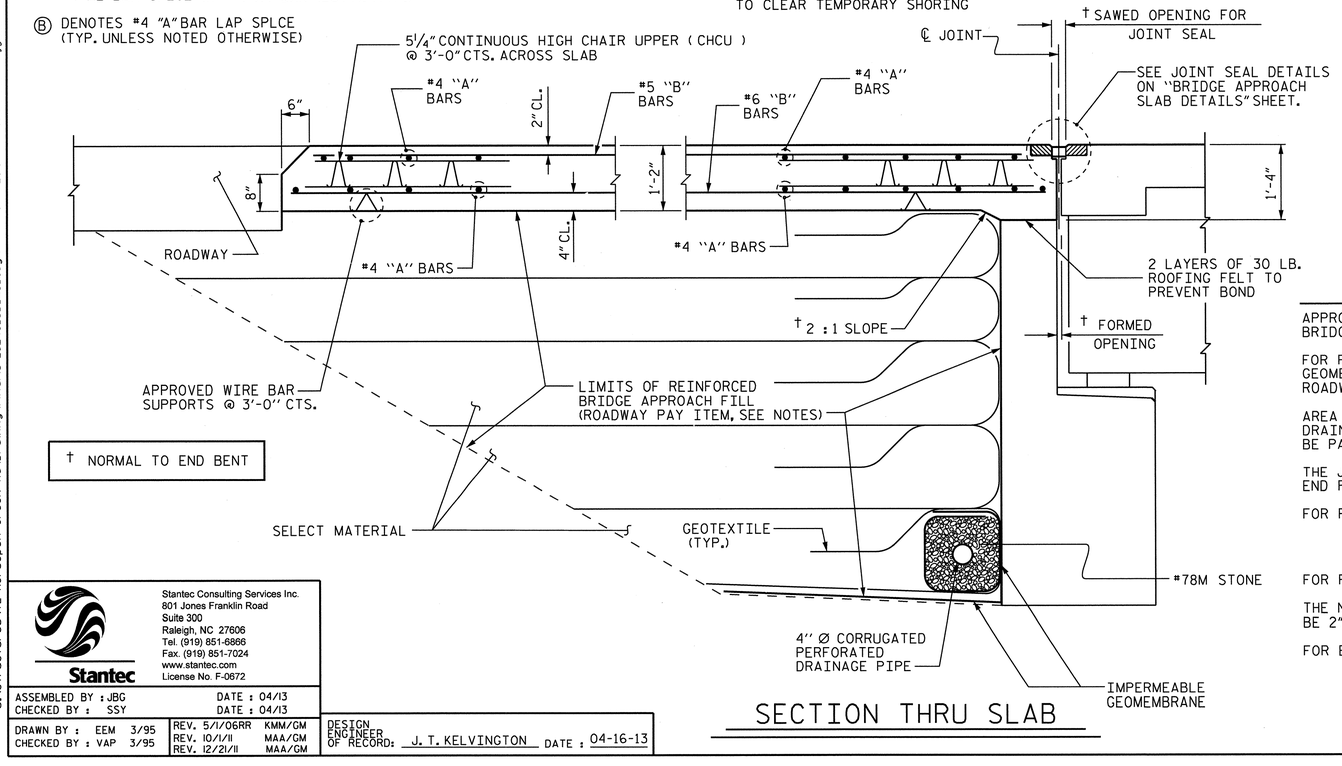

† NORMAL TO END BENT

SECTION THRU SLAB

SPLICE LENGTHS		
BAR SIZE	EPOXY COATED	UNCOATED
#4	2'-0"	1'-9"
#5	2'-6"	2'-2"
#6	3'-10"	2'-7"

BAR TYPES

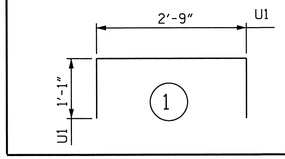

BILL OF MATERIAL — APPROACH SLAB AT END BENT #1 STAGE I

BAR	NO.	SIZE	TYPE	LENGTH	WEIGHT
✱A1	50	#4	STR	29'-10"	996
A2	52	#4	STR	29'-10"	1036
✱B1	88	#5	STR	23'-4"	2142
B2	88	#6	STR	24'-4"	3216
✱B3	4	#4	STR	24'-4"	65
✱G1	25	#5	STR	8'-2"	213
✱U1	10	#4	1	4'-11"	33
REINFORCING STEEL				LBS.	4252
✱EPOXY COATED REINFORCING STEEL				LBS.	3449
CLASS AA CONCRETE:					
APPROACH SLAB				C. Y.	47.7
SIDEWALK				C. Y.	3.6
TOTAL CLASS AA CONCRETE				C. Y.	51.3

BILL OF MATERIAL — APPROACH SLAB AT END BENT #1 STAGE II

BAR	NO.	SIZE	TYPE	LENGTH	WEIGHT
✱A3	50	#4	STR	28'-7"	955
A4	52	#4	STR	28'-7"	993
✱B1	88	#5	STR	23'-4"	2142
B2	88	#6	STR	24'-4"	3216
✱B3	4	#4	STR	24'-4"	65
✱B4	6	#4	STR	24'-4"	98
✱B5	10	#4	STR	13'-4"	89
✱G1	25	#5	STR	8'-2"	213
✱G2	34	#4	STR	8'-10"	201
✱U1	10	#4	1	4'-11"	33
REINFORCING STEEL				LBS.	4209
✱EPOXY COATED REINFORCING STEEL				LBS.	3796
CLASS AA CONCRETE:					
APPROACH SLAB				C. Y.	47.7
SIDEWALK				C. Y.	3.6
MEDIAN				C. Y.	4.6
TOTAL CLASS AA CONCRETE				C. Y.	55.9

APPROACH SLAB AT END BENT #2 STAGE I

BAR	NO.	SIZE	TYPE	LENGTH	WEIGHT
✱A1	50	#4	STR	29'-10"	996
A2	52	#4	STR	29'-10"	1036
✱B1	88	#5	STR	23'-4"	2142
B2	88	#6	STR	24'-4"	3216
✱B3	4	#4	STR	24'-4"	65
✱G1	25	#5	STR	8'-2"	213
✱U1	10	#4	1	4'-11"	33
REINFORCING STEEL				LBS.	4252
✱EPOXY COATED REINFORCING STEEL				LBS.	3449
CLASS AA CONCRETE:					
APPROACH SLAB				C. Y.	47.7
SIDEWALK				C. Y.	3.6
TOTAL CLASS AA CONCRETE				C. Y.	51.3

APPROACH SLAB AT END BENT #2 STAGE II

BAR	NO.	SIZE	TYPE	LENGTH	WEIGHT
✱A3	50	#4	STR	28'-7"	955
A2	52	#4	STR	28'-7"	993
✱B1	88	#5	STR	23'-4"	2142
B2	88	#6	STR	24'-4"	3216
✱B3	4	#4	STR	24'-4"	65
✱B4	3	#4	STR	24'-4"	49
✱G1	25	#5	STR	8'-2"	213
✱G3	17	#4	STR	3'-9"	43
✱U1	10	#4	1	4'-11"	33
REINFORCING STEEL				LBS.	4209
✱EPOXY COATED REINFORCING STEEL				LBS.	3500
CLASS AA CONCRETE:					
APPROACH SLAB				C. Y.	47.7
SIDEWALK				C. Y.	3.6
MEDIAN				C. Y.	1.6
TOTAL CLASS AA CONCRETE				C. Y.	52.9

NOTES

APPROACH SLAB SHALL NOT BE CONSTRUCTED PRIOR TO COMPLETION OF THE BRIDGE DECK.

FOR REINFORCED BRIDGE APPROACH FILL INCLUDING GEOTEXTILE, IMPERMEABLE GEOMEMBRANE, 4" Ø DRAINAGE PIPE, #78M STONE, AND SELECT MATERIAL, SEE ROADWAY PLANS.

AREA BETWEEN THE WINGWALL AND APPROACH SLAB SHALL BE GRADED TO DRAIN THE WATER AWAY FROM THE FILL FACE OF THE BRIDGE AND SHALL BE PAVED. SEE ROADWAY PLANS.

THE JOINT SHALL BE SAWED PRIOR TO THE CASTING OF THE PARAPET AND END POST.

FOR RAISED CONCRETE MEDIAN DETAILS, SEE SHEET 2 OF 3.

WITH FOAM JOINT SEAL

FOR FOAM JOINT SEALS, SEE SPECIAL PROVISIONS.

THE NOMINAL UNCOMPRESSED SEAL WIDTH OF THE FOAM JOINT SEAL SHALL BE 2".

FOR ELASTOMERIC CONCRETE, SEE SPECIAL PROVISIONS.

Stantec
Stantec Consulting Services Inc.
801 Jones Franklin Road
Suite 300
Raleigh, NC 27606
Tel. (919) 851-6866
Fax. (919) 851-7024
www.stantec.com
License No. F-0672

ASSEMBLED BY : JBG DATE : 04/13
CHECKED BY : SSY DATE : 04/13

DRAWN BY : EEM 3/95
CHECKED BY : VAP 3/95

REV. 5/1/06RR KMM/GM
REV. 10/1/11 MAA/GM
REV. 12/21/11 MAA/GM

DESIGN ENGINEER OF RECORD: J. T. KELVINGTON DATE : 04-16-13

NORTH CAROLINA PROFESSIONAL SEAL 13406 ENGINEER JOSEPH T. KELVINGTON 6/7/13

PROJECT NO. U-2524C
GUILFORD COUNTY
STATION: 332+65.40 -L-

SHEET 1 OF 3

STATE OF NORTH CAROLINA
DEPARTMENT OF TRANSPORTATION
RALEIGH

BRIDGE APPROACH SLAB FOR FLEXIBLE PAVEMENT

REVISIONS						SHEET NO.
NO.	BY:	DATE:	NO.	BY:	DATE:	S-583
1			3			TOTAL SHEETS
2			4			836

STD. NO. BAS2 (SHT 2a)

U:\Structures\Y2 Horsepen Creek Rd\Drawing\Final\U-2524C_SD_AS.dgn 6/7/2013 3:11:14 PM jgeile STRUCTURES PEN TABLE.tbl

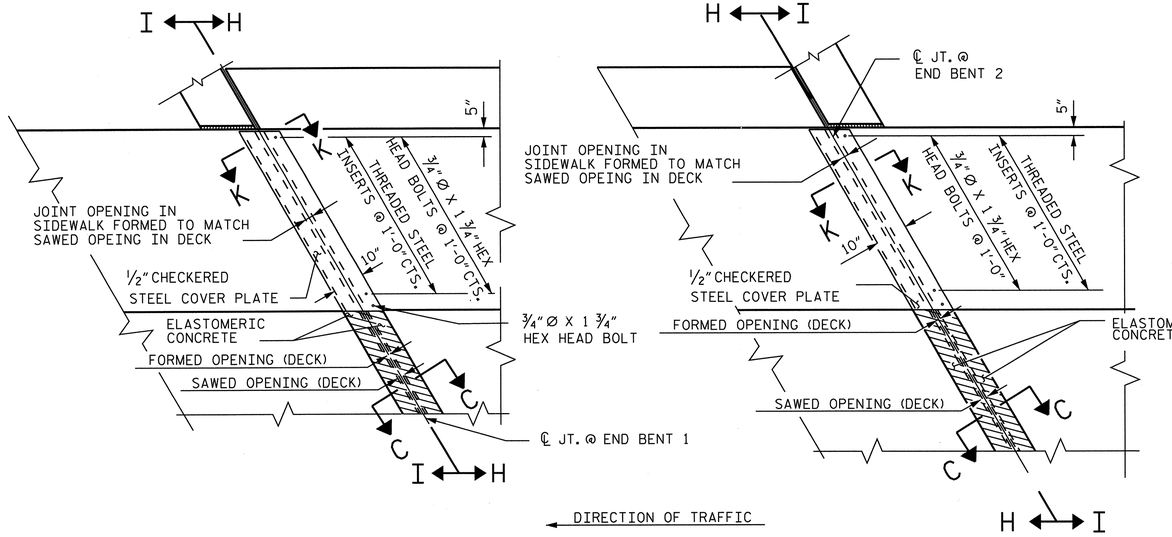

END BENT 1 END BENT 2

STAGE I CONSTRUCTION

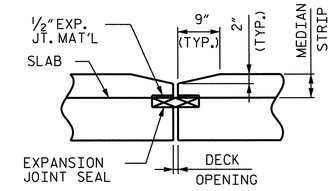

DETAILS AT EXPANSION JOINT

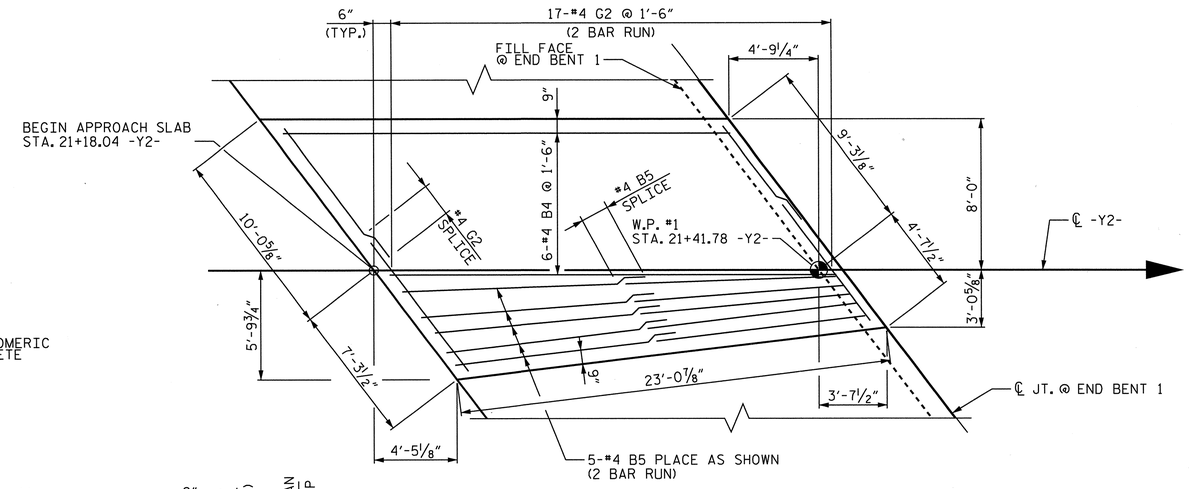

PLAN VIEW OF CONCRETE MEDIAN ON APPROACH SLAB AT END BENT 1

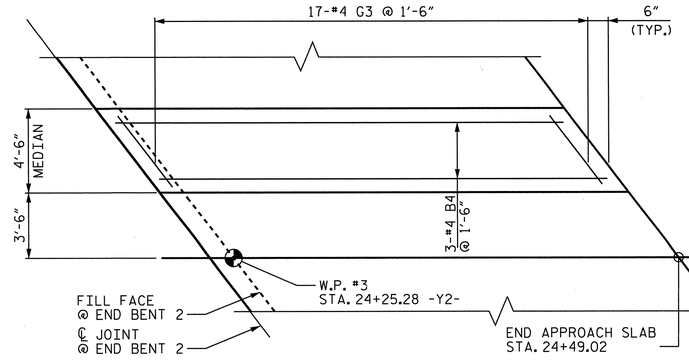

PLAN VIEW OF CONCRETE MEDIAN ON APPROACH SLAB AT END BENT 2

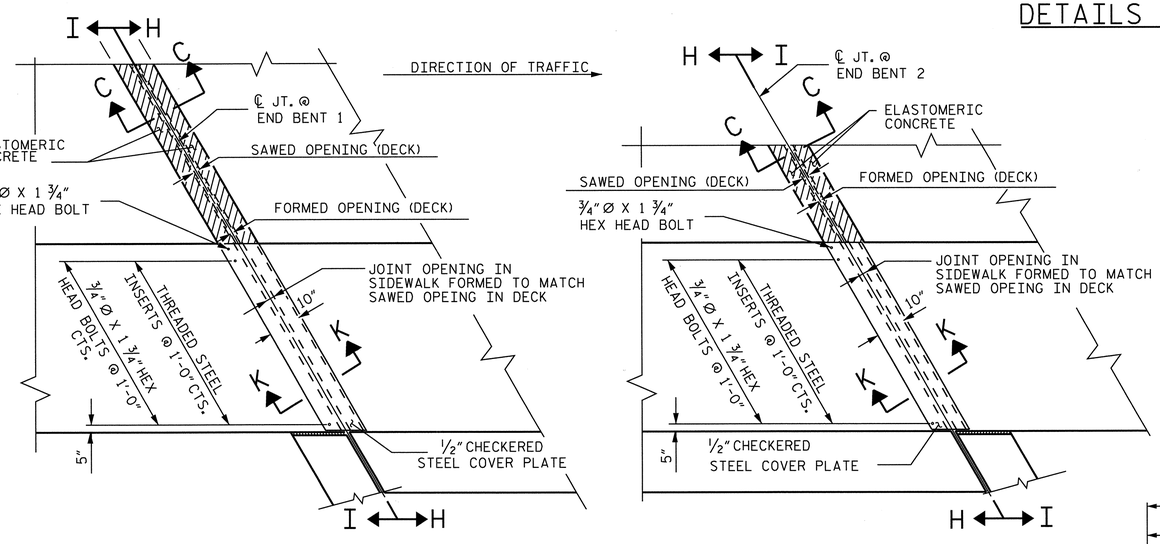

END BENT 1 END BENT 2

STAGE II CONSTRUCTION

PLAN VIEW OF FOAM JOINT SEAL @ END BENT FOR SIDEWALK

FOR SECTION C-C, H-H, I-I, K-K, SEE "BRIDGE APPROACH SLAB DETAILS," SHEET 3 OF 3.

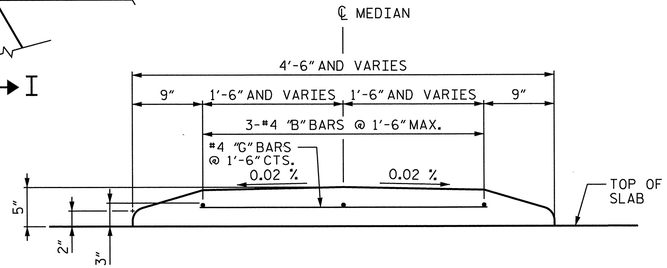

CONCRETE MEDIAN REINFORCING STEEL DETAILS

(ALL REINFORCING STEEL IN CONCRETE MEDIAN SHALL BE EPOXY COATED)

Stantec
Stantec Consulting Services Inc.
801 Jones Franklin Road
Suite 300
Raleigh, NC 27606
Tel. (919) 851-6866
Fax. (919) 851-7024
www.stantec.com
License No. F-0672

DRAWN BY : J. B. GEILE DATE : 04-11-13
CHECKED BY : S. S. YUEN DATE : 04-11-13
DESIGN ENGINEER OF RECORD: J. T. KELVINGTON DATE : 04-16-13

PROJECT NO. U-2524C
GUILFORD COUNTY
STATION: 332+65.40 -L-

SHEET 2 of 3

STATE OF NORTH CAROLINA
DEPARTMENT OF TRANSPORTATION
RALEIGH

BRIDGE APPROACH SLAB DETAILS

REVISIONS						SHEET NO.
NO.	BY:	DATE:	NO.	BY:	DATE:	S-584
1			3			TOTAL SHEETS
2			4			836

NORTH CAROLINA PROFESSIONAL SEAL 13406 ENGINEER JOSEPH T. KELVINGTON
4/16/13

U:\Structures\V2 Horsepen Creek Rd\Drawing\Final\U-2524C_SD_AS_2.dgn 6/7/2013 2:54:54 PM Jgeile STRUCTURES PEN TABLE.tbl
Raleigh PDF Creator (Full).plt

Raleigh PDF Creator (Full).plt
STRUCTURES PEN TABLE.tbl
6/7/2013 2:54:56 PM jgeille
...tation\Design\Structures\Y2 Horsepen Creek Rd\Drawing\Final\U-2524C_SD_A5.3.dgn

ELASTOMERIC CONCRETE	
END BENT NO.	ELASTOMERIC CONCRETE * (CU. FT.)
1	16.0
2	16.0
TOTAL	32.0

* BASED ON THE MINIMUM BLOCKOUT SHOWN.

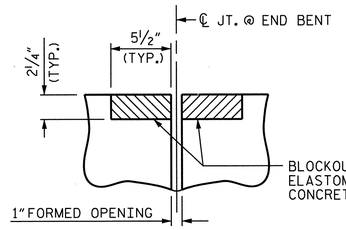

SECTION C-C
FOAM JOINT SEAL
(PRE-SAWED ELASTOMERIC CONCRETE DIMENSIONS)

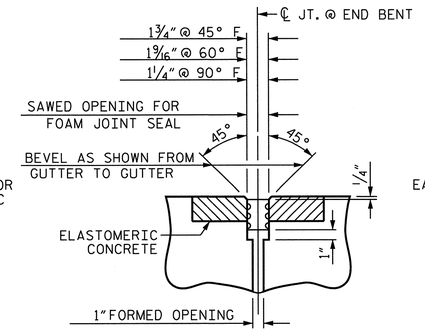

SECTION C-C
FOAM JOINT SEAL
(EXPANSION)

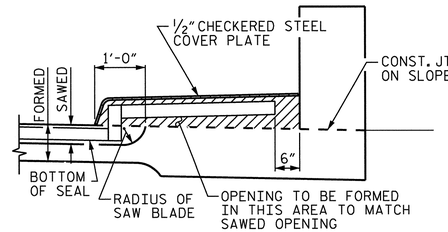

SECTION H-H

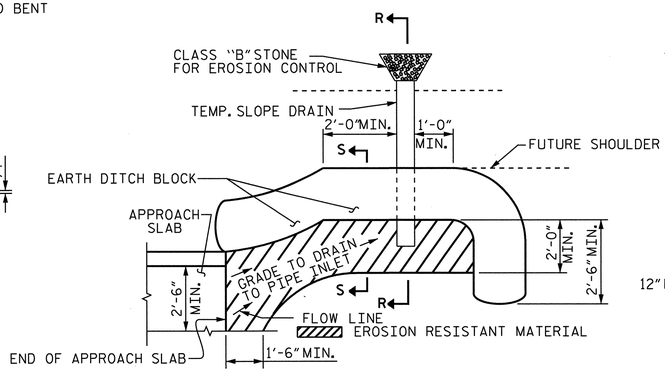

NOTE: IMMEDIATELY AFTER THE CONSTRUCTION OF THE APPROACH SLAB, THE CONTRACTOR SHALL PROVIDE TEMPORARY BERM AND SLOPE DRAIN. CONTRACTOR SHALL GRADE TO PIPE INLET AND PROVIDE EROSION RESISTANT MATERIAL AS SHOWN. THE EROSION RESISTANT MATERIAL SHALL BE EITHER 1) ASPHALT PLANT MIX, TYPE 1 OR TYPE 2, MIN. 2" DEPTH, 2) EROSION CONTROL MAT, OR 3) CONCRETE, AS DIRECTED BY THE ENGINEER. THE SLOPE DRAIN SHALL CONSIST OF A NON-PERFORATED TEMPORARY DRAINAGE PIPE, 12 INCHES IN DIAMETER.

PLAN VIEW

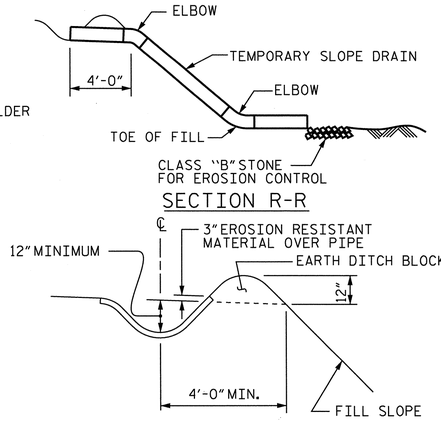

SECTION R-R

SECTION S-S

TEMPORARY BERM AND SLOPE DRAIN DETAILS

(TO BE USED WHEN SHOULDER BERM GUTTER IS REQUIRED)

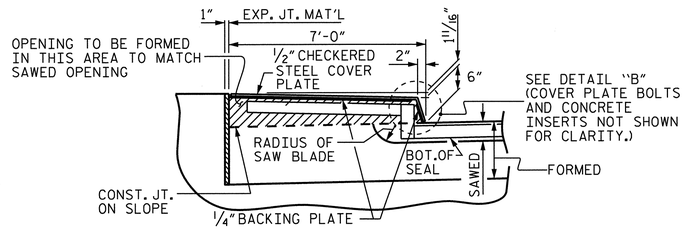

SECTION I-I

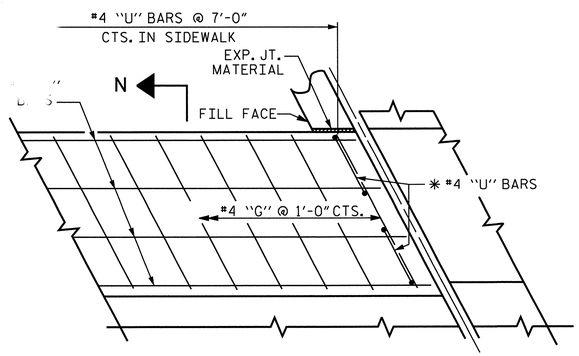

* THESE BARS ARE TO BE PLACED AFTER THE SAWING OF THE JOINT. THE HOLES SHALL BE DRILLED AND THE DOWELS GROUTED INTO PLACE.

PLAN

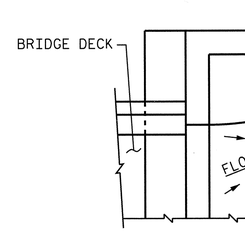

NOTE: IF THE APPROACH SLAB IS NOT CONSTRUCTED IMMEDIATELY AFTER THE BACKFILLING OF THE END BENT EXCAVATION, GRADE TO DRAIN TO THE BOTTOM OF THE SLOPE AND PROVIDE EROSION RESISTANT MATERIAL, SUCH AS FIBERGLASS ROVING OR AS DIRECTED BY THE ENGINEER TO PREVENT SOIL EROSION AND TO PROTECT THE AREA ADJACENT TO THE STRUCTURE. THE CONTRACTOR WILL BE REQUIRED TO REMOVE THESE MATERIALS PRIOR TO CONSTRUCTION OF THE APPROACH SLAB.

TEMPORARY DRAINAGE DETAIL

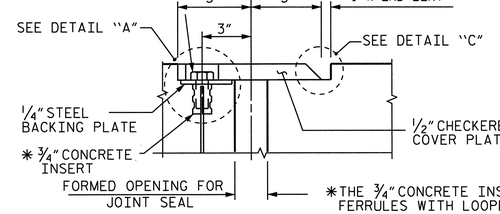

SECTION K-K

* THE ¾" CONCRETE INSERTS SHALL BE CLOSED-END FERRULES WITH LOOPED WIRE STRUTS ATTACHED TO THEM. THE INSERTS SHALL CONFORM TO AASHTO M169, GRADE 12L14 AND SHALL HAVE A TENSILE WORKING LOAD CAPACITY OF 3000 LBS.

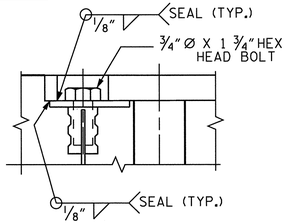

DETAIL "A"

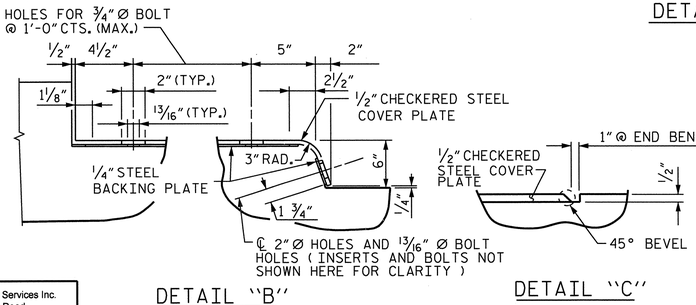

NOTE: SEE SECTION H-H FOR JOINT SEAL PLACEMENT

DETAIL "B"

DETAIL "C"

JOINT SEAL DETAILS @ END BENT

DETAILS OF SIDEWALK ON APPROACH SLAB

THE STEEL PLATES SHALL CONFORM TO AASHTO M270 GRADE 36 OR APPROVED EQUAL. AFTER FABRICATION, THE PLATES SHALL BE COMMERCIALLY BLAST CLEANED AND EITHER COATED WITH A MINIMUM THICKNESS OF 4 MILS (DRY) OF ZINC-RICH PAINT, GALVANIZED OR METALLIZED TO A MINIMUM THICKNESS OF 6 MILS IN ACCORDANCE WITH THE STANDARD SPECIFICATIONS. FOR THERMAL SPRAYED COATINGS (METALLIZATION), SEE SPECIAL PROVISIONS.

THE ¾" DIAMETER HEX HEAD BOLTS SHALL CONFORM TO ASTM F593 ALLOY 304 STAINLESS STEEL.

NO SEPARATE PAYMENT WILL BE MADE FOR FURNISHING AND INSTALLING THE COVER PLATE. THE ENTIRE COST OF THIS WORK SHALL BE INCLUDED IN THE LUMP SUM PRICE FOR "FOAM JOINT SEALS".

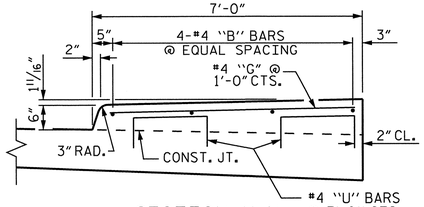

SECTION N-N

SIDEWALK DETAILS

Stantec
Stantec Consulting Services Inc.
801 Jones Franklin Road
Suite 300
Raleigh, NC 27606
Tel. (919) 851-6866
Fax. (919) 851-7024
www.stantec.com
License No. F-0672

ASSEMBLED BY : JBG	DATE : 04/13		
CHECKED BY : SSY	DATE : 04/13		
DRAWN BY : FCJ 11/88	REV. 5/7/03	RWW/JTE	DESIGN ENGINEER OF RECORD: J. T. KELVINGTON DATE : 04-16-13
CHECKED BY : ARB 11/88	REV. 5/1/06RRR	MAA/KMM	
	REV. 10/1/11	MAA/GM	

NORTH CAROLINA PROFESSIONAL SEAL 13406 ENGINEER JOSEPH T. KELVINGTON 7/1/13

PROJECT NO. U-2524C

GUILFORD COUNTY

STATION: 332+65.40 -L-

SHEET 3 OF 3

STATE OF NORTH CAROLINA
DEPARTMENT OF TRANSPORTATION
RALEIGH

BRIDGE APPROACH SLAB DETAILS

REVISIONS						SHEET NO.
NO.	BY:	DATE:	NO.	BY:	DATE:	S-585
1			3			TOTAL SHEETS
2			4			836

F.A. PROJ. NO. NHF-0708(62)

3+00 4+00 5+00 6+00 7+00 8+00

- 0.8148% - 4.4042%

GRADE DATA -RPBY4-

PVI STA. = 5+20.00
PVI EL. = 790.77
LVC = 540.00

800 790 780 770 760 750 740

SPAN 1 SPAN 2 SPAN 3

LEFT LANE BRIDGE

℄ BENT 1 STA. 4+35.31 -RPBY4- EL. 790.32

EXP.

APPROXIMATE EXISTING GROUNDLINE

TOP OF DRILLED PIER EL. 748.35

749.4± 749.3± 748.9± 748.7±

FIX. FIX.

TOP OF DRILLED PIER EL. 747.45

4′-0″ Ø COLUMN (TYP.)

5′-0″ Ø DRILLED PIER (TYP.)

748.8±

FIX. FIX.

TOP OF DRILLED PIER EL. 747.57

748.7±

FILL FACE @ END BENT 2 STA. 7+68.14 -RPBY4- EL. 779.83

1′-7″ BERM

BEGIN FRONT SLOPE STA. 7+81.64 -RPBY4- EL. 779.25

EXP.

2′-0″ THICK CLASS II RIP RAP

1½ 1

FILL

1′-0″ BOT. OF CAP TO EARTH BERM

3′-6″ MIN.

HP 12 X 53 STEEL PILES

748.8±

BENT 1 BENT 2 BENT 3 END BENT 2

SECTION ALONG ℄ SURVEY -RPBY4-

(SECTION AT RIGHT ANGLES TO BENTS)

TOTAL BRIDGE LENGTH = 332′-10″
℄ BENT 1 TO FILL FACE END BENT 2

119′-3″ SPAN 1 | 119′-3″ SPAN 2 | 94′-4″ SPAN 3

47′-2″

EXTENDED♦ TANGENT | SURVEY♦ LINE

ST STA 5+06.43 -RPBY4-

℄ SURVEY -RPBY4-

P.O.T. STA 6+01.72 -RPBY4-

TO HORSEPEN CREEK RD. (SR 2182)

W.P. B1 @ ℄ BENT 1 STA. 4+35.31 -RPBY4-

W.P. B2 @ ℄ BENT 2 STA. 5+54.56 -RPBY4-

89°-34′-25″ (TAN. TO SPIRAL)

90°-00′-00″ (TYP., U.N.O.)

W.P. B3 @ ℄ BENT 3 STA. 6+73.81 -RPBY4-

● TEMPORARY WORK BRIDGE (TYP.)

SEE LEFT LANE PLANS FOR DETAILS

LEFT LANE GRADE LINE

W.P. B4 @ FILL FACE END BENT 2 STA. 7+68.14 -RPBY4-

BEGIN FRONT SLOPE STA. 7+81.64 -RPBY4-

END APPROACH SLAB STA. 7+92.14 -RPBY4-

TO BATTLEGROUND AVE. (US 220)

SC STA 9+03.14 -RPBY4-

BERM EL. 769.01 (LEVEL)

1′-7″ BERM (TYP.)

CLASS II RIP RAP

IS STA 7+93.14 -RPBY4- = POT STA 0+00.00 -SPBY4-

PLAN

(PILES NOT SHOWN FOR CLARITY)

HORIZ. CURVE DATA -RPBY4-

PIs = 1+33.36
θs = 3°22′13.2″ (LT.)
Ls = 200.00′
LT = 133.36′
ST = 66.69′

PI = 2+53.23
Δ = 3°35′13.5″ (LT.)
D = 3°22′13.2″
L = 106.43′
T = 53.23′
R = 1,700.00′

PIs = 3+73.12
θs = 3°22′13.2″ (LT.)
Ls = 200.00′
LT = 133.36′
ST = 66.69′

PIs = 8+66.54
θs = 7°19′42.7″ (RT.)
Ls = 110.00′
LT = 73.40′
ST = 36.72′

PI = 12+07.00
Δ = 70°29′40.4″ (RT.)
D = 13°19′28.6″
L = 529.06′
T = 303.86′
R = 430.00′

PIs = 14+68.92
θs = 7°19′42.7″ (RT.)
Ls = 110.00′
LT = 73.40′
ST = 36.72′

♦ BRIDGE IS ALIGNED PARALLEL TO SURVEY LINE AND EXTENDED TANGENT. SEE GENERAL DRAWING SHEET 3 OF 5. W.P. IS SHOWN ON ℄ SURVEY -RPBY4-.

● SEE LEFT LANE BRIDGE PLANS FOR TEMPORARY WORK BRIDGE LAYOUT AND PAYMENT.

NORTH CAROLINA PROFESSIONAL SEAL 18165 ENGINEER MARK F. ROBBINS 5-30-13

NORTH CAROLINA PROFESSIONAL SEAL 28479 ENGINEER KEVIN G. BAILEY 5-30-13

PROJECT NO. U-2524C
GUILFORD COUNTY
STATION: POT 6+01.72 -RPBY4-

SHEET 1 OF 5 BRIDGE NO. 1129

STATE OF NORTH CAROLINA
DEPARTMENT OF TRANSPORTATION
RALEIGH

GENERAL DRAWING BRIDGE ON RAMP B OVER WETLANDS

-RAMP B-

REVISIONS						SHEET NO.
NO.	BY:	DATE:	NO.	BY:	DATE:	S-586
1			3			TOTAL SHEETS
2			4			836

STV / Ralph Whitehead Associates, Inc.
1000 West Morehead St., Ste. 200
Charlotte, NC 28208
NC License No. F-0991

DRAWN BY : MM DATE : 10-12
CHECKED BY : MLO DATE : 10-12
DESIGN ENGINEER OF RECORD: K. BAILEY DATE : 5-13

5/30/2013 9:17:45 AM R:\station\Finals\(01) Plan and Elevation.dgn

NOTES:

1. FOR FOUNDATION NOTES, SEE GENERAL DRAWING SHEET 5 OF 5.
2. FOR ADDITIONAL INFORMATION, SEE EXTENDED TANGENT LAYOUT ON SHEET 3 OF 5.

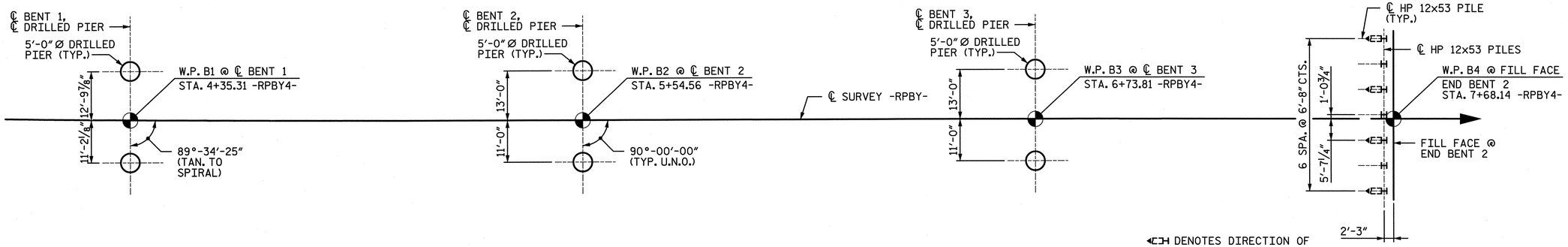

FOUNDATION LAYOUT

(DIMENSIONS TO DRILLED PIERS ARE TO ℄ OF DRILLED PIERS)
(DIMENSIONS TO HP 12x53 PILES ARE TO ℄ HP 12x53 PILES)

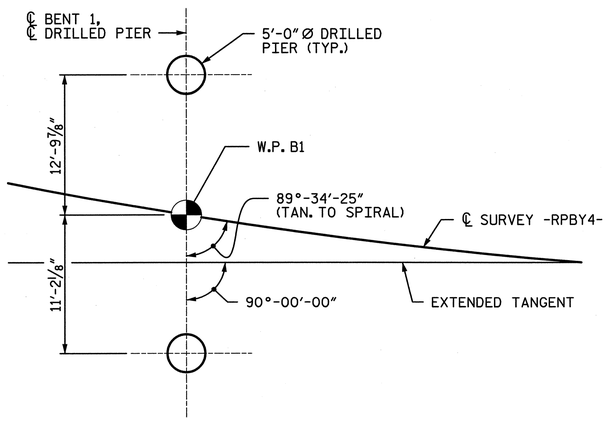

BENT 1 DETAIL

FOR ADDITIONAL DETAILS, SEE EXTENDED TANGENT LAYOUT

PROJECT NO. U-2524C
GUILFORD COUNTY
STATION: POT 6+01.72 -RPBY4-

SHEET 2 OF 5

STATE OF NORTH CAROLINA
DEPARTMENT OF TRANSPORTATION
RALEIGH

GENERAL DRAWING
BRIDGE ON RAMP B
OVER WETLANDS

-RAMP B-

NORTH CAROLINA PROFESSIONAL SEAL 18165 ENGINEER MARK F. ROBBINS 5-30-13

NORTH CAROLINA PROFESSIONAL SEAL 28479 ENGINEER KEVIN G. BAILEY 5-30-13

STV/ Ralph Whitehead Associates, Inc.
1000 West Morehead St., Ste. 200
Charlotte, NC 28208
NC License No. F-0991

REVISIONS						SHEET NO.
NO.	BY:	DATE:	NO.	BY:	DATE:	S-587
1			3			TOTAL SHEETS
2			4			836

DRAWN BY : VMW	DATE : 2-13	DESIGN ENGINEER OF RECORD: K. BAILEY	DATE : 5-13
CHECKED BY : TRL	DATE : 3-13		

5/29/2013 10:01:30 AM R:\ustation\Finals\(02) Foundation Layout.dgn

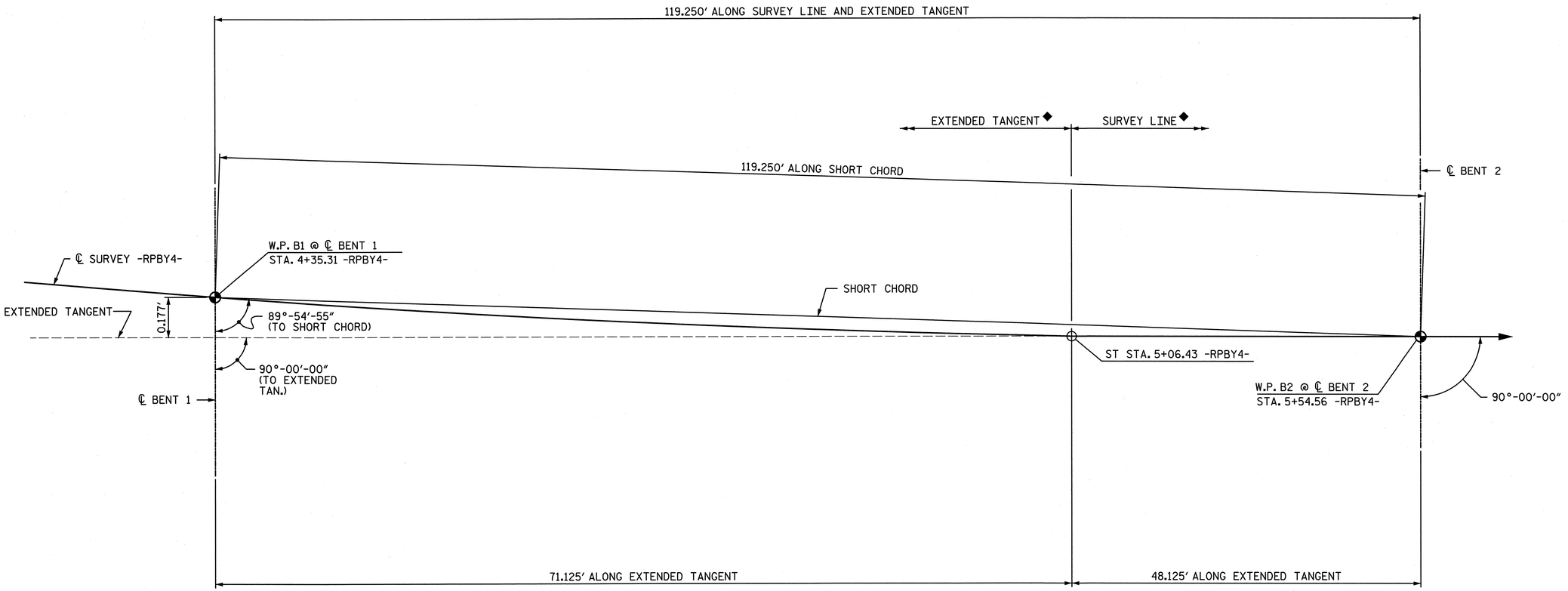

◆BRIDGE IS ALONG THE EXTENDED TANGENT.

EXTENDED TANGENT LAYOUT

(℄ SURVEY -RPBY4- AND EXTENDED TANGENT ARE EXAGGERATED FOR CLARITY)

HORIZ. CURVE DATA -RPBY4-

PIs = 1+33.36 θs = 3°22'13.2" (LT.) Ls = 200.00' LT = 133.36' ST = 66.69'	PI = 2+53.23 Δ = 3°35'13.5" (LT.) D = 3°22'13.2" L = 106.43' T = 53.23' R = 1,700.00'	PIs = 3+73.12 θs = 3°22'13.2" (LT.) Ls = 200.00' LT = 133.36' ST = 66.69'
PIs = 8+66.54 θs = 7°19'42.7" (RT.) Ls = 110.00' LT = 73.40' ST = 36.72'	PI = 12+07.00 Δ = 70°29'40.4" (RT.) D = 13°19'28.6" L = 529.06' T = 303.86' R = 430.00'	PIs = 14+68.92 θs = 7°19'42.7" (RT.) Ls = 110.00' LT = 73.40' ST = 36.72'

PROJECT NO. U-2524C

GUILFORD COUNTY

STATION: POT 6+01.72 -RPBY4-

SHEET 3 OF 5

STATE OF NORTH CAROLINA
DEPARTMENT OF TRANSPORTATION
RALEIGH

GENERAL DRAWING BRIDGE ON RAMP B OVER WETLANDS

-RAMP B-

NORTH CAROLINA PROFESSIONAL SEAL 18165 ENGINEER MARK F. ROBBINS 5-30-13

NORTH CAROLINA PROFESSIONAL SEAL 28479 ENGINEER KEVIN G. BAILEY 5-30-13

STV / Ralph Whitehead Associates, Inc.
1000 West Morehead St., Ste. 200
Charlotte, NC 28208
NC License No. F-0991

REVISIONS						SHEET NO.
NO.	BY:	DATE:	NO.	BY:	DATE:	S-588
1			3			TOTAL SHEETS
2			4			830

DRAWN BY : CLG DATE : 2-13
CHECKED BY : MFR DATE : 2-13
DESIGN ENGINEER OF RECORD: K. BAILEY DATE : 5-13

5/29/2013 10:01:32 AM R:\station\Finals\(03) Tangent_Extension_Layout.dgn

BM #12
N 870838.9390, E 1746657.1000
STA. 174+63 -BL-, OFFSET 122' LT., ELEV. 748.99'
(STA. 421+03.23 -L-, OFFSET 129.906' LT.)

FOR UTILITY INFORMATION, SEE UTILITY PLANS AND SPECIAL PROVISIONS.

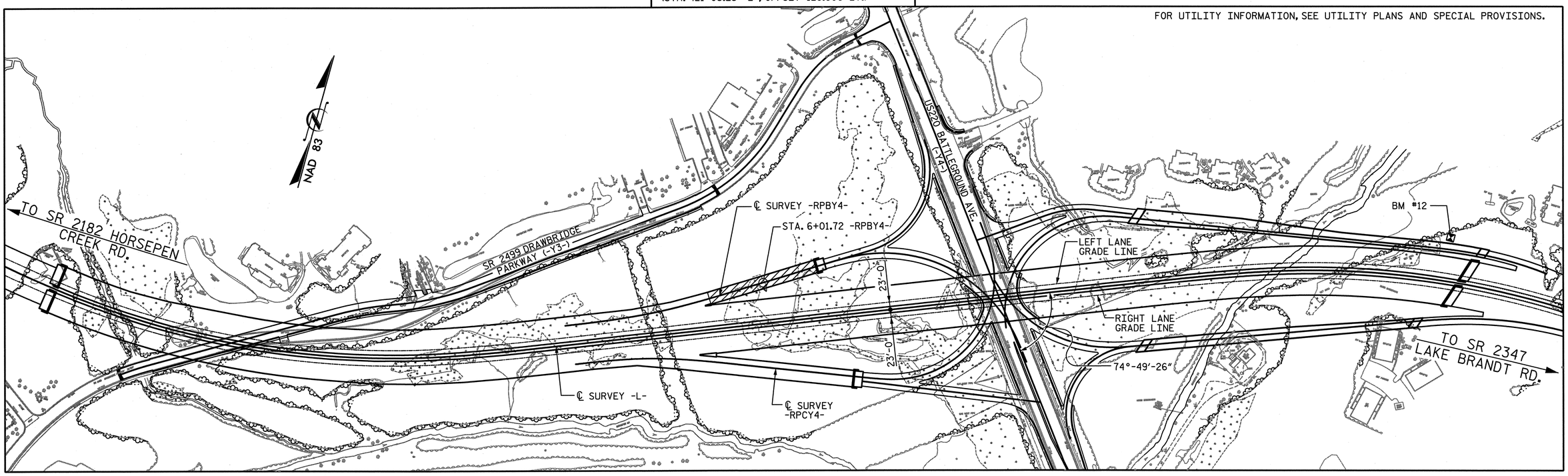

LOCATION SKETCH

PROJECT NO. U-2524C
GUILFORD COUNTY
STATION: POT 6+01.72 -RPBY4-

SHEET 4 OF 5

STATE OF NORTH CAROLINA
DEPARTMENT OF TRANSPORTATION
RALEIGH

GENERAL DRAWING
BRIDGE ON RAMP B
OVER WETLANDS

-RAMP B-

NORTH CAROLINA PROFESSIONAL SEAL 18165 ENGINEER MARK F. ROBBINS 5-30-13

NORTH CAROLINA PROFESSIONAL SEAL 28479 ENGINEER KEVIN G. BAILEY 5.30.13

STV/ Ralph Whitehead Associates, Inc.
1000 West Morehead St., Ste. 200
Charlotte, NC 28208
NC License No. F-0991

REVISIONS						SHEET NO.
NO.	BY:	DATE:	NO.	BY:	DATE:	S-589
1			3			TOTAL SHEETS
2			4			836

DRAWN BY : CLG DATE : 3-13
CHECKED BY : TRL DATE : 3-13
DESIGN ENGINEER OF RECORD: K. BAILEY DATE : 5-13

5/29/2013 10:01:35 AM R:\station\Finals\(04) Location Sketch.dgn

TOTAL BILL OF MATERIAL

	5'-0" DIA. DRILLED PIER IN SOIL	5'-0" DIA. DRILLED PIER NOT IN SOIL	SID INSPECTIONS	SPT TESTING	CSL TESTING	REINFORCED CONCRETE DECK SLAB	GROOVING BRIDGE FLOORS	CLASS A CONCRETE	BRIDGE APPROACH SLABS, STA. 6+01.72 -RPBY4-	REINFORCING STEEL	SPIRAL COLUMN REINFORCING STEEL	MODIFIED 72" PRESTRESSED CONCRETE GIRDERS		HP12X53 STEEL PILES		CONCRETE BARRIER RAIL	RIP RAP CLASS II (2'-0" THICK)	GEOTEXTILE FOR DRAINAGE	ELASTOMERIC BEARINGS	EXPANSION JOINT SEALS	STRUCTURE DRAINAGE SYSTEM AT STA. 6+01.72 -RPBY4-
	LIN. FT.	LIN. FT.	EACH	EACH	EACH	SQ. FT.	SQ. FT.	CU. YDS.	LUMP SUM	LBS.	LBS.	NO.	LIN. FT.	NO.	LIN. FT.	LIN. FT.	TON	SQ. YD.	LUMP SUM	LUMP SUM	LUMP SUM
SUPERSTRUCTURE						12,441.8	11,070		LUMP SUM			12	1,317.5			683.6			LUMP SUM	LUMP SUM	LUMP SUM
BENT 1	60.8	22.0						59.8		27,264	4,905										
BENT 2	58.0	22.0						57.8		27,177	4,703										
BENT 3	48.2	21.0						54.1		24,537	4,108										
END BENT 2								49.2		6,270				7	315		725	805			
TOTAL BRIDGE	167.0	65.0	2	1	3	12,441.8	11,070	220.9	LUMP SUM	85,248	13,716	12	1,317.5	7	315	683.6	725	805	LUMP SUM	LUMP SUM	LUMP SUM

GENERAL NOTES

GENERAL NOTES:

ASSUMED LIVE LOAD = HL-93 OR ALTERNATE LOADING.

FOR OTHER DESIGN DATA AND GENERAL NOTES, SEE SHEET SN.

THIS BRIDGE HAS BEEN DESIGNED IN ACCORDANCE WITH THE AASHTO LRFD BRIDGE DESIGN SPECIFICATIONS.

THIS BRIDGE IS LOCATED IN SEISMIC ZONE 1.

THE CONTRACTOR SHALL PROVIDE INDEPENDENT ASSURANCE SAMPLES OF REINFORCING STEEL AS FOLLOWS: FOR PROJECTS REQUIRING UP TO 400 TONS OF REINFORCING STEEL, ONE 30" SAMPLE OF EACH SIZE BAR USED, AND FOR PROJECTS REQUIRING OVER 400 TONS OF REINFORCING STEEL, TWO 30" SAMPLES OF EACH SIZE BAR USED. THE BARS FROM WHICH THE SAMPLES ARE TAKEN MUST THEN BE SPLICED WITH REPLACEMENT BARS OF THE SIZE AND LENGTH OF THE SAMPLE, PLUS A MINIMUM LAP SPLICE OF THIRTY BAR DIAMETERS. ALL COSTS FOR PROVIDING REINFORCING STEEL SAMPLES SHALL BE CONSIDERED INCIDENTAL AND NO ADDITIONAL PAYMENT WILL BE MADE.

REMOVABLE FORMS MAY BE USED IN LIEU OF METAL STAY-IN-PLACE FORMS IN ACCORDANCE WITH ARTICLE 420-3 OF THE STANDARD SPECIFICATIONS.

NEEDLE BEAMS WILL NOT BE ALLOWED UNLESS OTHERWISE CALLED FOR ON THE PLANS OR APPROVED BY THE ENGINEER.

FOR EROSION CONTROL MEASURES, SEE EROSION CONTROL PLANS.

FOR CONSTRUCTION, MAINTENANCE AND REMOVAL OF TEMPORARY ACCESS, SEE LEFT LANE BRIDGE PLANS. NO ADDITIONAL MEASUREMENT OR PAYMENT WILL BE MADE FOR ACCESS TO THE RAMP BRIDGE.

FOR FALSEWORK AND FORMWORK, SEE SPECIAL PROVISIONS.

FOR SUBMITTAL OF WORKING DRAWINGS, SEE SPECIAL PROVISIONS.

FOR CRANE SAFETY, SEE SPECIAL PROVISIONS.

FOR GROUT FOR STRUCTURES, SEE SPECIAL PROVISIONS.

THE CLASS AA CONCRETE IN THE BRIDGE DECK SHALL CONTAIN FLY ASH OR GROUND GRANULATED BLAST FURNACE SLAG AT THE SUBSTITUTION RATE SPECIFIED IN ARTICLE 1024-1 AND IN ACCORDANCE WITH ARTICLES 1024-5 AND 1024-6 OF THE STANDARD SPECIFICATIONS. NO PAYMENT WILL BE MADE FOR THIS SUBSTITUTION AS IT IS CONSIDERED INCIDENTIAL TO THE COST OF THE REINFORCED CONCRETE DECK SLAB.

FOR BRIDGE DECK RIDEABILITY AND GROOVING AT STATION 6+01.72 -RPBY4-, SEE SPECIAL PROVISIONS.

FOR PLACING LOAD ON STRUCTURE MEMBERS, SEE SPECIAL PROVISIONS.

THE LOCATION OF THE CONSTRUCTION JOINT IN THE DRILLED PIER IS BASED ON AN APPROXIMATE GROUND LINE ELEVATION. IF THE CONSTRUCTION JOINT IS ABOVE THE ACTUAL GROUND ELEVATION, THE CONTRACTOR SHALL PLACE THE CONSTRUCTION JOINT 1 FOOT BELOW THE GROUND LINE.

FOUNDATION NOTES:

FOR PILES, SEE SECTION 450 OF THE STANDARD SPECIFICATIONS.

PILES AT END BENT NO. 2 ARE DESIGNED FOR A FACTORED RESISTANCE OF 125 TONS PER PILE.

DRIVE PILES AT END BENT NO. 2 TO A REQUIRED DRIVING RESISTANCE OF 210 TONS PER PILE.

OBSERVE A FIVE MONTH WAITING PERIOD AFTER CONSTRUCTING THE EMBANKMENT TO WITHIN 2 FT OF FINISHED GRADE BEFORE BEGINNING END BENT CONSTRUCTION AT END BENT NO. 2.

FOR DRILLED PIERS, SEE SECTION 411 OF THE STANDARD SPECIFICATIONS.

SID INSPECTIONS MAY BE REQUIRED FOR DRILLED PIERS. THE ENGINEER WILL DETERMINE THE NEED FOR SID INSPECTIONS. FOR SID INSPECTIONS, SEE SECTION 411 OF THE STANDARD SPECIFICATIONS.

SPT MAY BE REQUIRED FOR DRILLED PIERS AT BENT NO. 2. THE ENGINEER WILL DETERMINE THE NEED FOR SPT. FOR SPT TESTING, SEE SECTION 411 OF THE STANDARD SPECIFICATIONS.

CSL TUBES ARE REQUIRED AND CSL TESTING MAY BE REQUIRED FOR DRILLED PIERS. THE ENGINEER WILL DETERMINE THE NEED FOR CSL TESTING. FOR CSL TESTING, SEE SECTION 411 OF THE STANDARD SPECIFICATIONS.

DRILLED PIERS AT BENT NO. 1 THROUGH BENT NO. 3 ARE DESIGNED FOR A FACTORED RESISTANCE OF 770 TONS, 820 TONS AND 755 PER PIER, RESPECTIVELY. CHECK FIELD CONDITIONS FOR THE REQUIRED TIP RESISTANCE OF 40.0 TSF.

INSTALL DRILLED PIERS AT BENT NO. 1 TO A TIP ELEVATION NO HIGHER THAN 707 FT AND WITH THE REQUIRED TIP RESISTANCE.

INSTALL DRILLED PIERS AT BENT NO. 2 TO A TIP ELEVATION NO HIGHER THAN 705 FT (LT) AND 710 FT (RT) AND WITH THE REQUIRED TIP RESISTANCE.

INSTALL DRILLED PIERS AT BENT NO. 3 TO A TIP ELEVATION NO HIGHER THAN 713 FT AND WITH THE REQUIRED TIP RESISTANCE.

6/11/2013 1:25:14 PM R:\Ustation\Finals\(05) Gen Dwg TotalBOM.dgn

DRAWN BY : CLG DATE : 3-13
CHECKED BY : TRL DATE : 3-13
DESIGN ENGINEER OF RECORD: K. BAILEY DATE : 5-13

STV/ Ralph Whitehead Associates, Inc.
1000 West Morehead St., Ste. 200
Charlotte, NC 28208
NC License No. F-0991

PROJECT NO. U-2524C
GUILFORD COUNTY
STATION: POT 6+01.72 -RPBY4-

SHEET 5 OF 5

STATE OF NORTH CAROLINA
DEPARTMENT OF TRANSPORTATION
RALEIGH

GENERAL DRAWING
BRIDGE ON RAMP B
OVER WETLANDS

-RAMP B-

REVISIONS						SHEET NO.
NO.	BY:	DATE:	NO.	BY:	DATE:	S-590
1			3			TOTAL SHEETS
2			4			836

LOAD AND RESISTANCE FACTOR RATING (LRFR) SUMMARY FOR PRESTRESSED CONCRETE GIRDERS

LEVEL		VEHICLE	WEIGHT (W) (TONS)	⟨#⟩ CONTROLLING LOAD RATING	MINIMUM RATING FACTORS (RF)	TONS = W x RF	STRENGTH I LIMIT STATE										SERVICE III LIMIT STATE						COMMENT NUMBER
								MOMENT					SHEAR					MOMENT						
							LIVE-LOAD FACTORS (γ_{LL})	DISTRIBUTION FACTORS (DF)	RATING FACTOR	SPAN	GIRDER LOCATION	DISTANCE FROM LEFT END OF SPAN (ft)	DISTRIBUTION FACTORS (DF)	RATING FACTOR	SPAN	GIRDER LOCATION	DISTANCE FROM LEFT END OF SPAN (ft)	LIVE-LOAD FACTORS (γ_{LL})	DISTRIBUTION FACTORS (DF)	RATING FACTOR	SPAN	GIRDER LOCATION	DISTANCE FROM LEFT END OF SPAN (ft)	
DESIGN LOAD RATING		HL-93 (INVENTORY)	N/A	⟨1⟩	1.08	--	1.75	0.89	1.08	3	EL	45.6	0.89	1.31	3	EL	17.8	0.80	0.89	1.09	1,2	EL	58.5	
		HL-93 (OPERATING)	N/A		1.40	--	1.35	0.89	1.40	3	EL	45.6	0.94	2.03	1,2	I	23.0	N/A	--	--	--	--	--	
		HS-20 (INVENTORY)	36	⟨2⟩	1.49	53.64	1.75	0.89	1.49	3	EL	45.6	0.94	2.16	1,2	I	23.0	0.80	0.89	1.58	1,2	EL	58.5	
		HS-20 (OPERATING)	36		1.93	69.48	1.35	0.89	1.93	3	EL	45.6	0.94	2.86	1,2	I	23.0	N/A	--	--	--	--	--	
LEGAL LOAD RATING	SINGLE VEHICLE (SV)	SH	12.5		4.16	52.00	1.40	0.89	4.76	3	EL	45.6	0.94	8.08	1,2	I	23.0	0.80	0.89	4.16	1,2	EL	58.5	
		S3A	22.75		2.30	52.33	1.40	0.89	2.64	3	EL	45.6	0.94	4.30	1,2	I	23.0	0.80	0.89	2.30	1,2	EL	58.5	
		S3C	21.5		2.43	52.25	1.40	0.89	2.78	3	EL	45.6	0.94	4.55	1,2	I	23.0	0.80	0.89	2.43	1,2	EL	58.5	
		S4A	26.75		2.00	53.50	1.40	0.89	2.31	3	EL	45.6	0.94	3.54	1,2	I	23.0	0.80	0.89	2.00	1,2	EL	58.5	
		S5A	30.5		1.77	53.99	1.40	0.89	2.04	3	EL	45.6	0.94	3.16	1,2	I	23.0	0.80	0.89	1.77	1,2	EL	58.5	
		S6A	34.5		1.60	55.20	1.40	0.89	1.87	3	EL	45.6	0.94	2.99	1,2	I	23.0	0.80	0.89	1.60	1,2	EL	58.5	
		S7A	40	⟨3⟩	1.34	53.60	1.40	0.89	1.57	3	EL	45.6	0.94	2.43	1,2	I	23.0	0.80	0.89	1.34	1,2	EL	58.5	
		S7B	38.5		1.44	55.44	1.40	0.89	1.68	3	EL	45.6	0.94	2.63	1,2	I	23.0	0.80	0.89	1.44	1,2	EL	58.5	
	TRUCK TRACTOR SEMI-TRAILER (TTST)	T4A	28.25		1.95	55.09	1.40	0.89	2.27	3	EL	45.6	0.94	3.32	1,2	I	23.0	0.80	0.89	1.95	1,2	EL	58.5	
		T5B	32		1.72	55.04	1.40	0.89	2.00	3	EL	45.6	0.94	3.17	1,2	I	23.0	0.80	0.89	1.72	1,2	EL	58.5	
		T6A	36		1.56	56.16	1.40	0.89	1.83	3	EL	45.6	0.94	2.85	1,2	I	23.0	0.80	0.89	1.56	1,2	EL	58.5	
		T7A	40		1.43	57.20	1.40	0.89	1.69	3	EL	45.6	0.94	2.58	1,2	I	23.0	0.80	0.89	1.43	1,2	EL	58.5	
		T7B	40		1.50	60.00	1.40	0.89	1.79	3	EL	45.6	0.94	2.45	1,2	I	23.0	0.80	0.89	1.50	1,2	EL	58.5	

LOAD FACTORS:

DESIGN LOAD RATING FACTORS	LIMIT STATE	γ_{DC}	γ_{DW}
	STRENGTH I	1.25	1.50
	SERVICE III	1.00	1.00

NOTES:

1. MINIMUM RATING FACTORS ARE BASED ON THE STRENGTH I AND SERVICE III LIMIT STATES.
2. ALLOWABLE STRESSES FOR SERVICE III LIMIT STATE ARE AS REQUIRED FOR DESIGN.

⟨#⟩ CONTROLLING LOAD RATING

⟨1⟩ DESIGN LOAD RATING (HL-93)

⟨2⟩ DESIGN LOAD RATING (HS-20)

⟨3⟩ LEGAL LOAD RATING **

** SEE CHART FOR VEHICLE TYPE

GIRDER LOCATION

I - INTERIOR GIRDER
EL - EXTERIOR LEFT GIRDER
ER - EXTERIOR RIGHT GIRDER

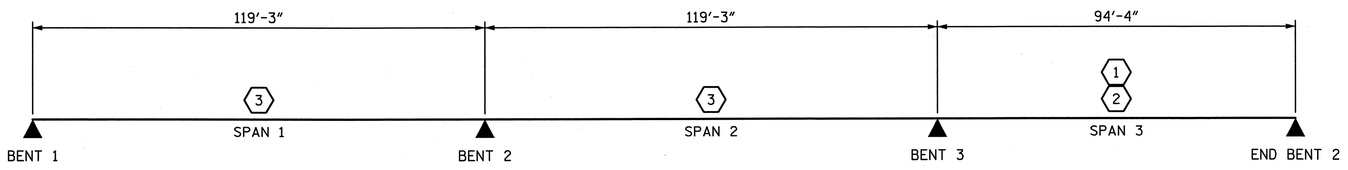

LRFR SUMMARY

(SPAN LENGTHS ARE ALONG SURVEY -RPBY4-)

PROJECT NO. U-2524C

GUILFORD COUNTY

STATION: POT 6+01.72 -RPBY4-

STATE OF NORTH CAROLINA
DEPARTMENT OF TRANSPORTATION
RALEIGH

LRFR SUMMARY FOR 72" PRESTRESSED CONCRETE MODIFIED BULB TEE

(INTERSTATE TRAFFIC)
-RAMP B-

NORTH CAROLINA PROFESSIONAL SEAL 28479 ENGINEER KEVIN G. BAILEY 5-30-13

STV / Ralph Whitehead Associates, Inc.
1000 West Morehead St., Ste. 200
Charlotte, NC 28208
NC License No. F-0991

REVISIONS							SHEET NO.
NO.	BY:	DATE:	NO.	BY:	DATE:		S-591
1			3				TOTAL SHEETS
2			4				836

DRAWN BY : YT DATE : 10-12
CHECKED BY : PLF DATE : 10-12
DESIGN ENGINEER OF RECORD: T. TOWNSEND DATE : 5-13

5/29/2013 10:01:40 AM R:\ustation\Finals\(06) MBT 72 LRFR.dgn

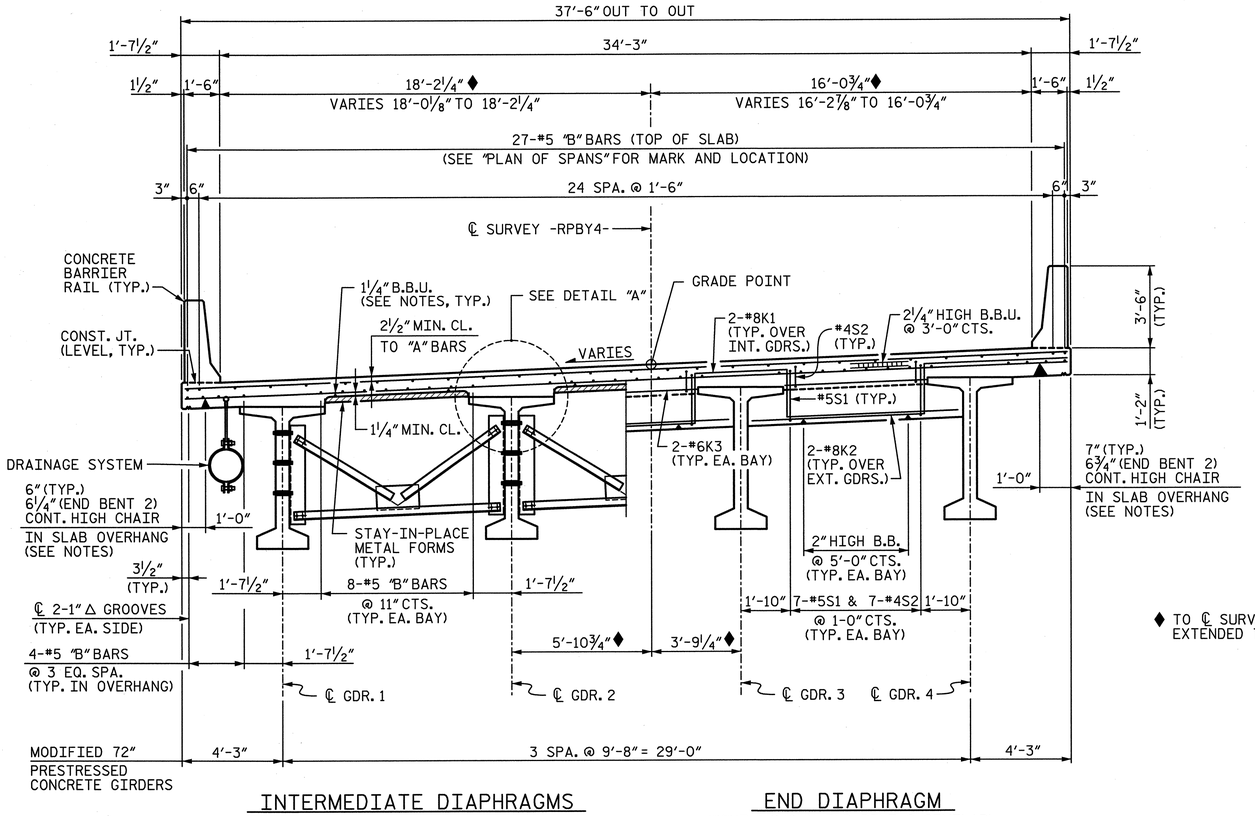

INTERMEDIATE DIAPHRAGMS

END DIAPHRAGM
(BENT 1 SHOWN, END BENT 2 SIMILAR)

♦ TO ℄ SURVEY -RPBY4- OR EXTENDED TANGENT

NOTES:

1. PROVIDE A 1¼" HIGH BEAM BOLSTER UPPER AT 4'-0" CTS. ATOP THE METAL STAY-IN-PLACE FORMS TO SUPPORT THE BOTTOM MAT OF "A" BARS.
2. LONGITUDINAL STEEL MAY BE SHIFTED SLIGHTLY, AS NECESSARY, TO AVOID INTERFERENCE WITH STIRRUPS IN PRESTRESSED CONCRETE GIRDERS.
3. BARRIER RAIL SHALL NOT BE CAST UNTIL ALL SLAB CONCRETE HAS BEEN CAST AND HAS REACHED A MINIMUM COMPRESSIVE STRENGTH OF 3000 PSI.
4. PREVIOUSLY CAST CONCRETE IN A CONTINUOUS UNIT SHALL HAVE ATTAINED A MINIMUM COMPRESSIVE STRENGTH OF 3000 PSI BEFORE ADDITIONAL CONCRETE IS CAST IN THE UNIT.
5. FOR INTERMEDIATE DIAPHRAGM DETAILS, SEE "INTERMEDIATE STEEL DIAPHRAGMS FOR 72" MODIFIED BULB TEE PRESTRESSED CONCRETE GIRDER" SHEET.
6. FOR END DIAPHRAGM AND CONTINUOUS DIAPHRAGM SECTIONS, SEE "SUPERSTRUCTURE DETAILS" SHEETS.
7. FOR BARRIER RAIL DETAILS, SEE CONCRETE BARRIER RAIL SHEETS.
8. FOR "B" BAR MARKS AND LOCATIONS, SEE CORRESPONDING "PLAN OF SPANS" SHEET.
9. FOR DRAINAGE SYSTEM, SEE "STRUCTURE DRAINAGE SYSTEM DETAILS" SHEETS.
10. HEIGHT OF BEAM BOLSTER & CONTINUOUS HIGH CHAIR IS CALCULATED @ ℄ BENT. CONTRACTOR SHALL ADJUST HEIGHTS, AS NECESSARY TO MAINTAIN PROPER CLEARANCE, DUE TO GIRDER CAMBER OR SUPERELEVATION CHANGE.
11. SHIFT "B" BARS SLIGHTLY, AS NECESSARY, TO CLEAR DECK DRAINS.

TYPICAL SECTION

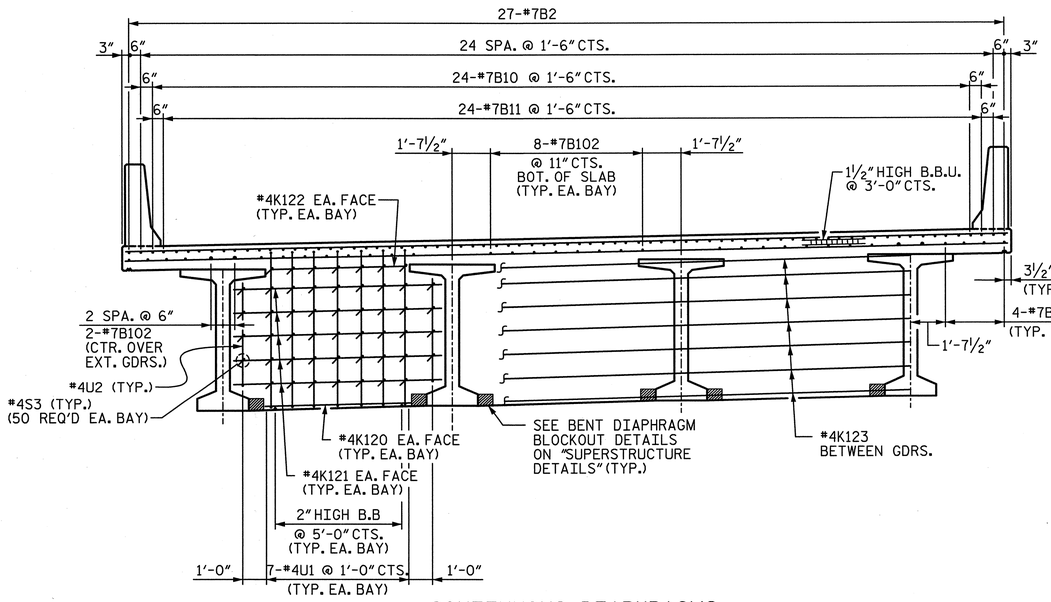

CONTINUOUS DIAPHRAGMS
(FOR "B" BAR PLACEMENT, SEE PLAN OF SPANS)

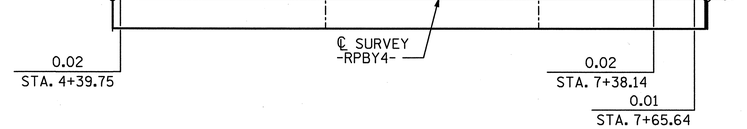

SUPERELEVATION DETAIL

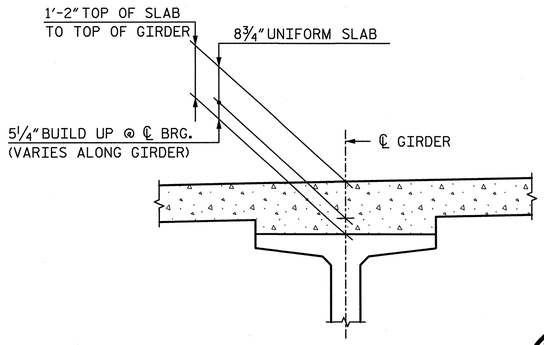

DETAIL "A"

NORTH CAROLINA PROFESSIONAL SEAL 28479 ENGINEER KEVIN G. BAILEY 5-30-13

PROJECT NO. U-2524C
GUILFORD COUNTY
STATION: POT 6+01.72 -RPBY4-

STATE OF NORTH CAROLINA
DEPARTMENT OF TRANSPORTATION
RALEIGH

TYPICAL SECTION
SPANS 1-3

-RAMP B-

DRAWN BY : MM	DATE : 10-12	DESIGN ENGINEER OF RECORD: A. PETER	DATE : 5-13
CHECKED BY : YT	DATE : 10-12		

STV / Ralph Whitehead Associates, Inc.
1000 West Morehead St., Ste. 200
Charlotte, NC 28208
NC License No. F-0991

REVISIONS						SHEET NO.
NO.	BY:	DATE:	NO.	BY:	DATE:	S-592
1			3			TOTAL SHEETS
2			4			836

5/29/2013 6:29:14 PM R:\station\Finals\07) Typ Sect. Ramp B.dgn

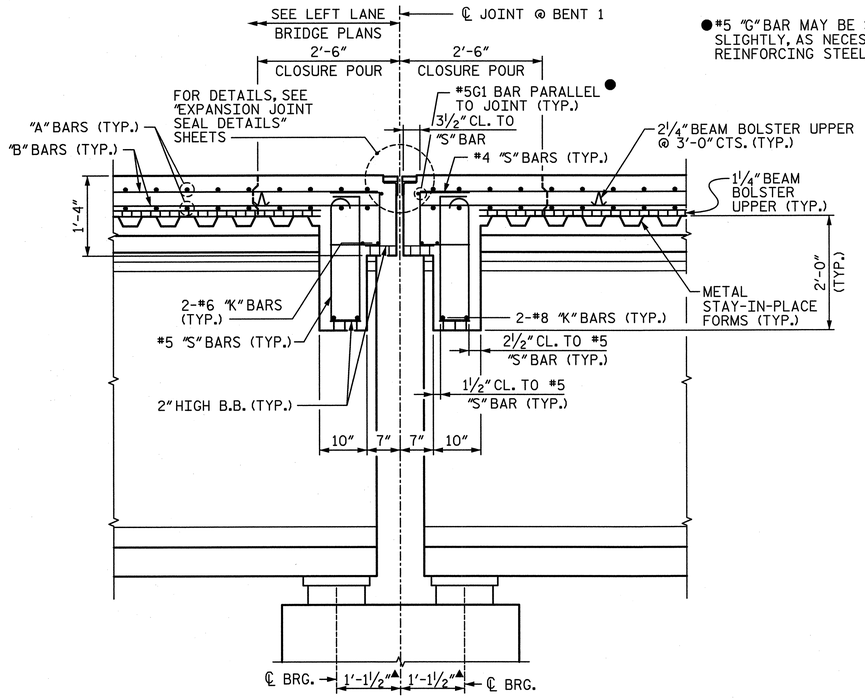

SECTION A-A

END DIAPHRAGM AT EXPANSION BENT 1
("J" BAR USED WITH STANDARD EXP. JT. NOT SHOWN)

●#5 "G" BAR MAY BE SHIFTED SLIGHTLY, AS NECESSARY, TO CLEAR REINFORCING STEEL AND STIRRUPS

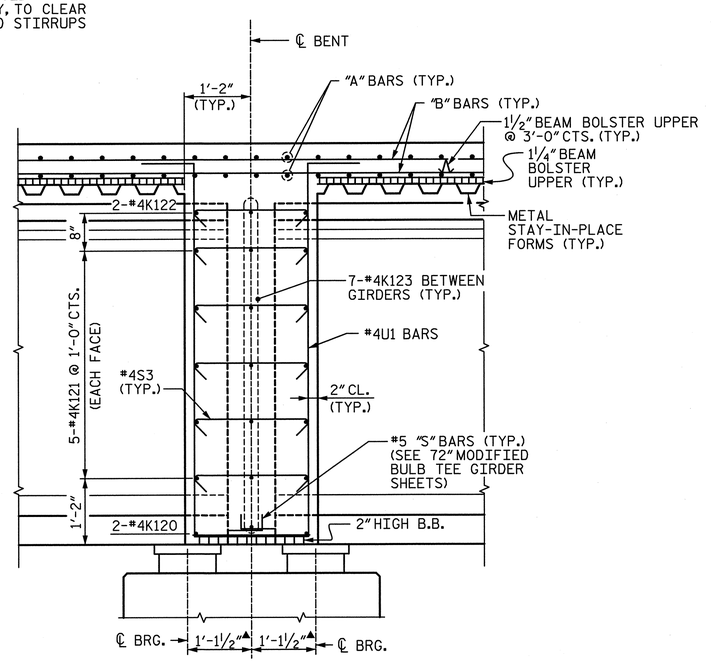

SECTION B-B

CONT. DIAPHRAGMS AT BENTS 2 & 3

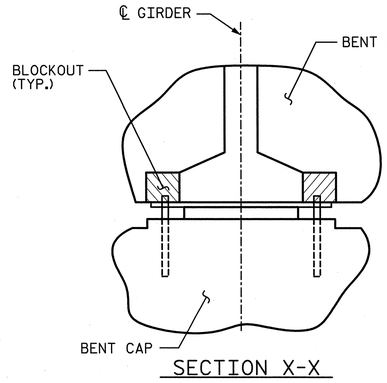

SECTION X-X

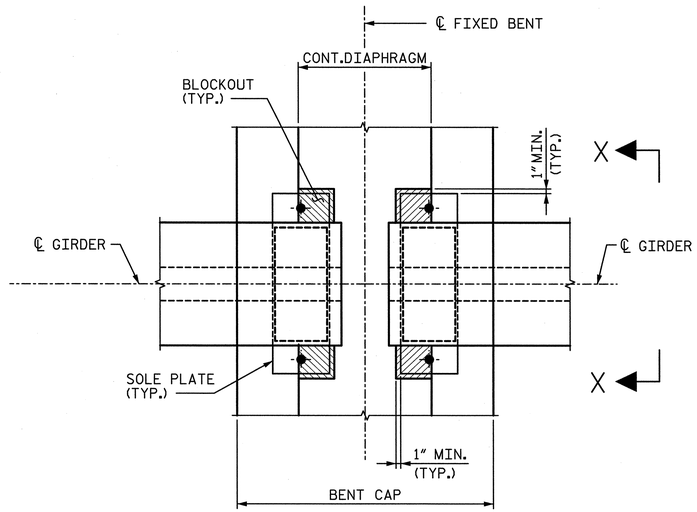

PLAN

CONT. DIAPHRAGM BLOCKOUT DETAILS

▲DIMENSIONS ARE MEASURED ALONG ℄ GIRDER

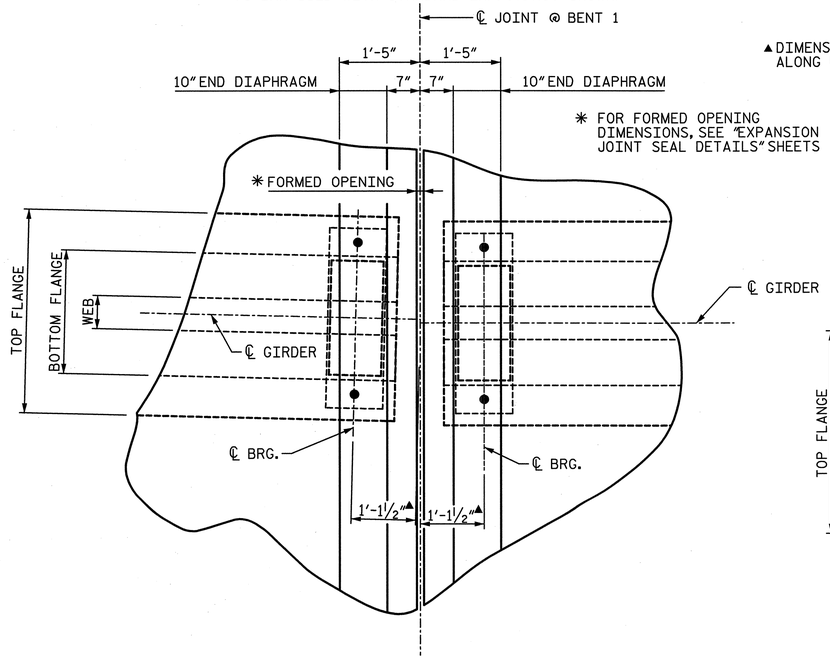

PLAN

(BENT CAP NOT SHOWN FOR CLARITY)

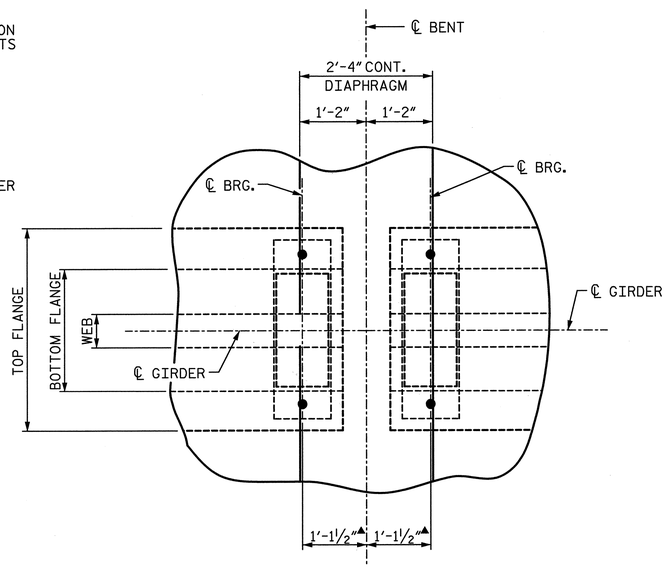

PLAN

(BENT CAP NOT SHOWN FOR CLARITY)

PROJECT NO. U-2524C

GUILFORD COUNTY

STATION: POT 6+01.72 -RPBY4-

SHEET 1 OF 2

STATE OF NORTH CAROLINA
DEPARTMENT OF TRANSPORTATION
RALEIGH

SUPERSTRUCTURE DETAILS

-RAMP B-

NORTH CAROLINA PROFESSIONAL SEAL 28479 ENGINEER KEVIN G. BAILEY
5-30-13

STV / Ralph Whitehead Associates, Inc.
1000 West Morehead St., Ste. 200
Charlotte, NC 28208
NC License No. F-0991

REVISIONS						SHEET NO.
NO.	BY:	DATE:	NO.	BY:	DATE:	S-593
1			3			TOTAL SHEETS
2			4			830

DRAWN BY : MM	DATE : 10-12	DESIGN ENGINEER OF RECORD: A. PETER	DATE : 5-13
CHECKED BY : YT	DATE : 10-12		

5/29/2013 6:29:17 PM R:\ustation\Finals\(08) Sup. Sect. Details Sheet 1 of 2.dgn

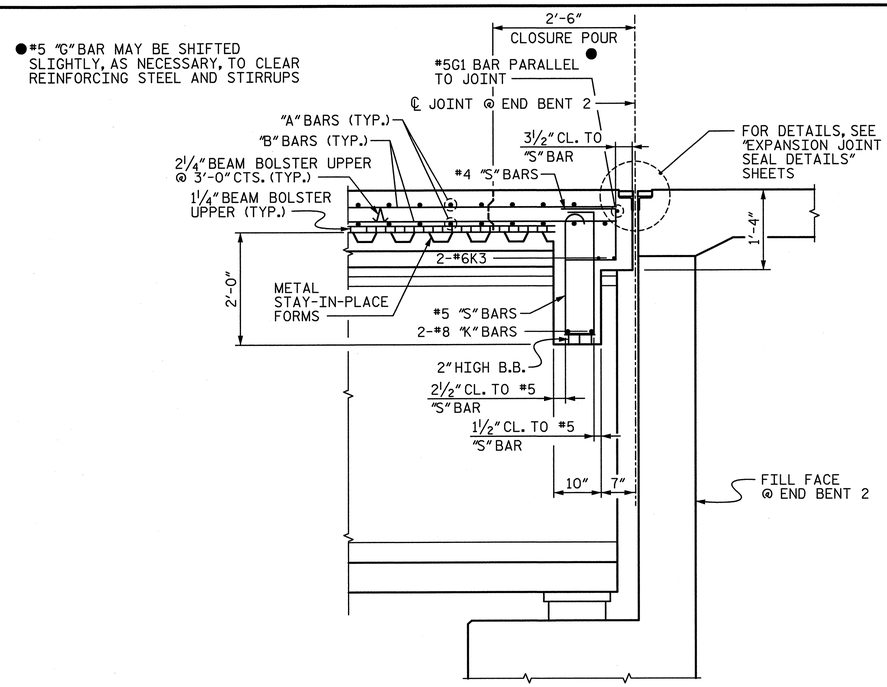

SECTION C-C

END DIAPHRAGM AT END BENT
("J" BAR USED WITH STANDARD EXP. JT. NOT SHOWN)

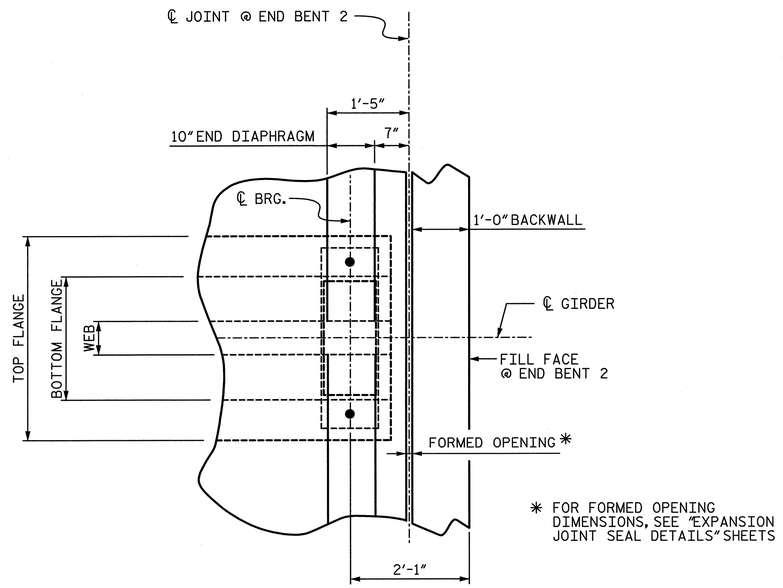

* FOR FORMED OPENING DIMENSIONS, SEE "EXPANSION JOINT SEAL DETAILS" SHEETS

PLAN

(BENT CAP NOT SHOWN FOR CLARITY)

NORTH CAROLINA PROFESSIONAL SEAL 28479 ENGINEER KEVIN G. BAILEY
5-30-13

PROJECT NO. U-2524C
GUILFORD COUNTY
STATION: POT 6+01.72 -RPBY4-

SHEET 2 OF 2

STATE OF NORTH CAROLINA
DEPARTMENT OF TRANSPORTATION
RALEIGH

SUPERSTRUCTURE DETAILS

-RAMP B-

REVISIONS						SHEET NO.
NO.	BY:	DATE:	NO.	BY:	DATE:	S-594
1			3			TOTAL SHEETS
2			4			834

STV/ Ralph Whitehead Associates, Inc.
1000 West Morehead St., Ste. 200
Charlotte, NC 28208
NC License No. F-0991

DRAWN BY : MM	DATE : 10-12	DESIGN ENGINEER OF RECORD: A. PETER	DATE : 5-13
CHECKED BY : YT	DATE : 10-12		

5/29/2013 6:29:19 PM R:\station\Finals\109) Sup. Sect. Details Sheet 2 of 2.dgn

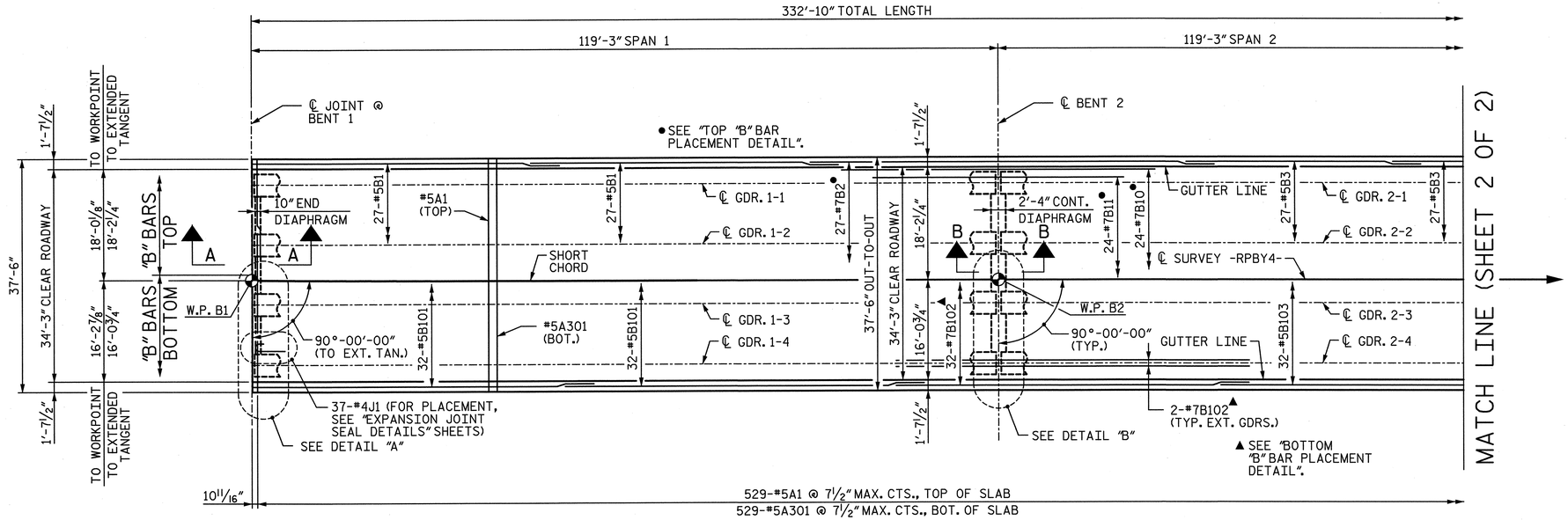

PLAN OF SPANS

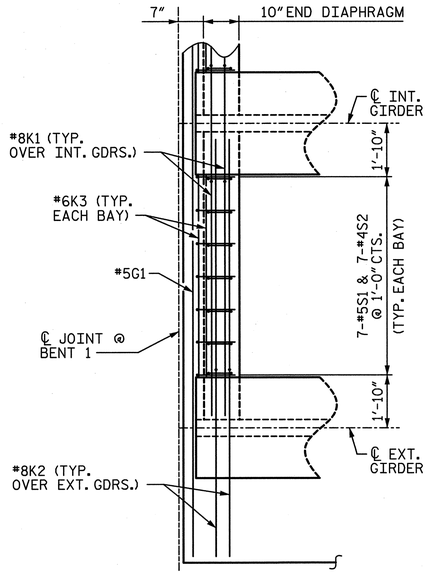

DETAIL "A"
END DIAPHRAGM AT BENT 1

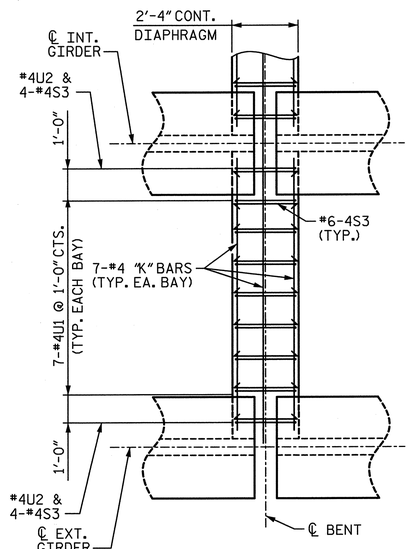

DETAIL "B"
CONTINUOUS DIAPHRAGM AT BENTS 2 & 3

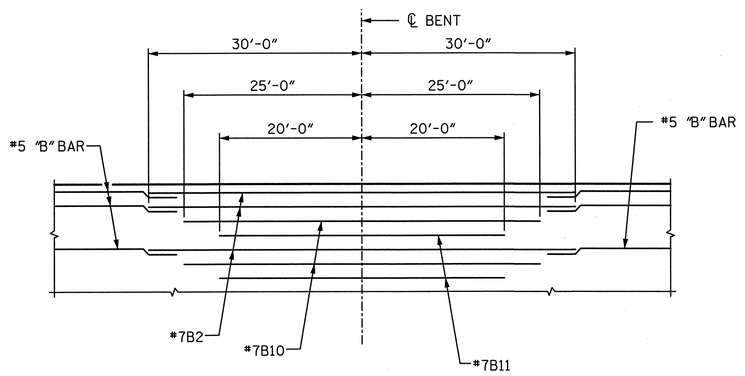

TOP "B" BAR PLACEMENT DETAIL

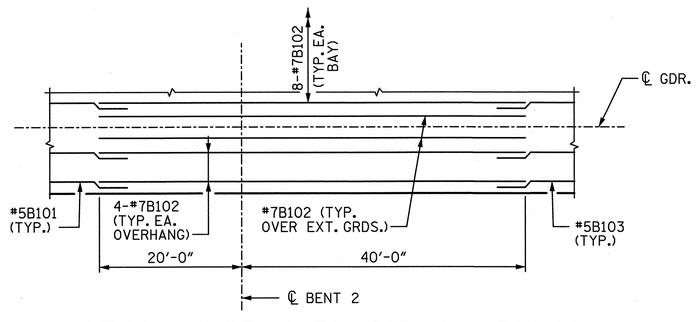

BOTTOM "B" BAR PLACEMENT DETAIL

NOTES:

1. FOR CONCRETE BARRIER RAIL DIMENSIONS, REINFORCEMENT AND JOINT SPACING, SEE CONCRETE BARRIER RAIL SHEETS.
2. FOR POURING SEQUENCE AND TRANSVERSE CONSTRUCTION JOINT IN DECK SLAB, SEE "SUPERSTRUCTURE BILL OF MATERIAL" SHEET.
3. FOR SECTION VIEWS, SEE "SUPERSTRUCTURE DETAILS" SHEETS.
4. FOR SPACING OF TOP AND BOTTOM "B" BARS, SEE "TYPICAL SECTION, SPANS 1-3" SHEET.
5. FOR DRAINAGE SYSTEM, SEE "STRUCTURE DRAINAGE SYSTEM DETAILS" SHEETS.
6. FOR MINIMUM SPLICE LENGTHS, SEE "SUPERSTRUCTURE BILL OF MATERIAL" SHEET.

PROJECT NO. U-2524C

GUILFORD COUNTY

STATION: POT 6+01.72 -RPBY4-

SHEET 1 OF 2

STATE OF NORTH CAROLINA
DEPARTMENT OF TRANSPORTATION
RALEIGH

PLAN OF SPANS
SPANS 1-2

-RAMP B-

NORTH CAROLINA PROFESSIONAL SEAL 28479 ENGINEER KEVIN G. BAILEY 5-30-13

DRAWN BY : MM DATE : 10-12
CHECKED BY : YT DATE : 10-12
DESIGN ENGINEER OF RECORD: A. PETER DATE : 5-13

STV / Ralph Whitehead Associates, Inc.
1000 West Morehead St., Ste. 200
Charlotte, NC 28208
NC License No. F-0991

REVISIONS					
NO.	BY:	DATE:	NO.	BY:	DATE:
1			3		
2			4		

SHEET NO. S-595
TOTAL SHEETS 83

5/29/2013 6:29:21 PM R:\ustation\Finals\110) Plan of Spans_RampB_Sheet 1 of 2.dgn

NOTES:

1. SEE SHEET 1 OF 2 FOR NOTES.

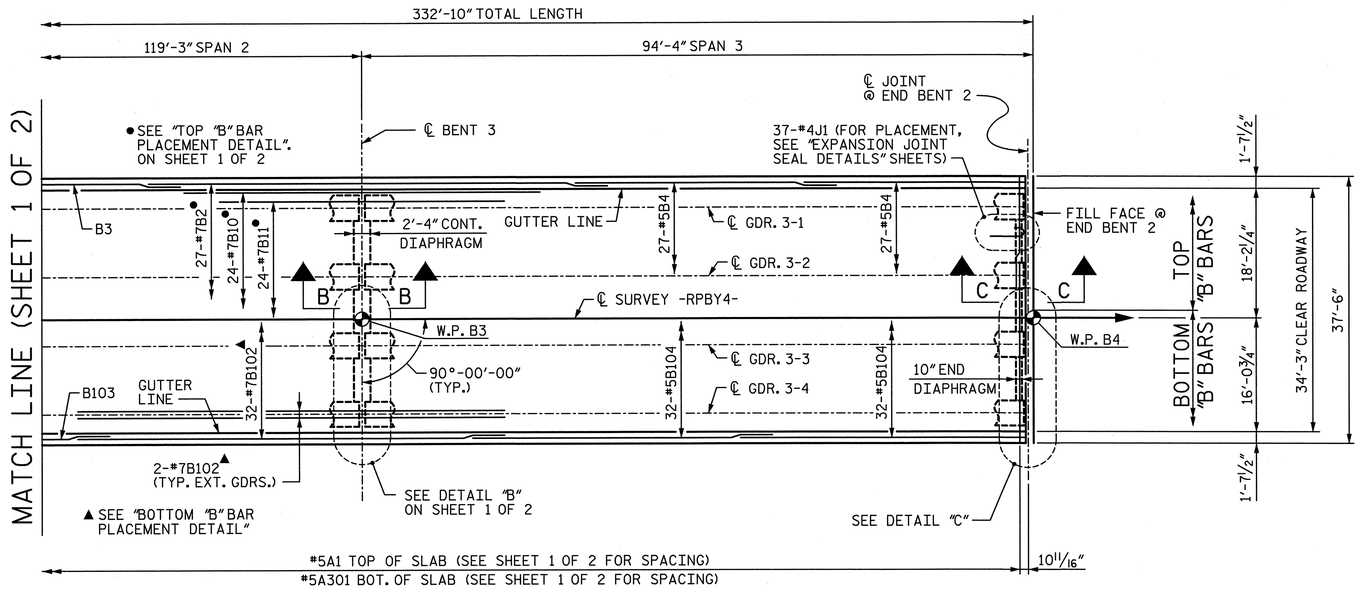

PLAN OF SPANS

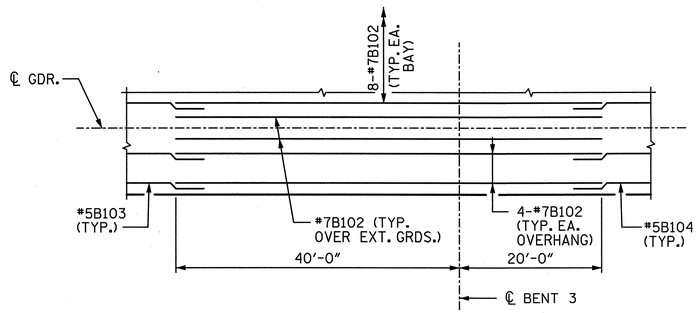

BOTTOM "B" BAR PLACEMENT DETAIL

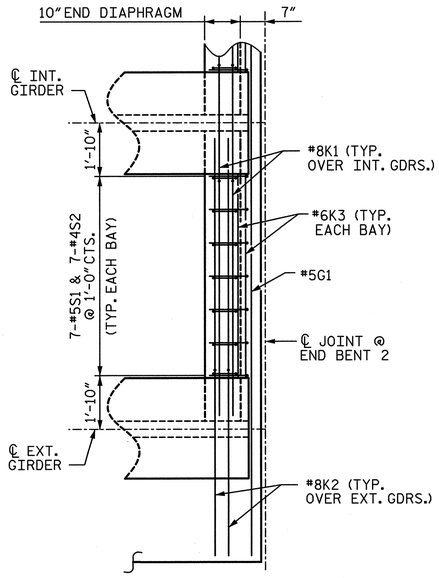

DETAIL "C"

END DIAPHRAGM AT END BENT 2

PROJECT NO. U-2524C

GUILFORD COUNTY

STATION: POT 6+01.72 -RPBY4-

SHEET 2 OF 2

STATE OF NORTH CAROLINA
DEPARTMENT OF TRANSPORTATION
RALEIGH

PLAN OF SPANS
SPANS 2-3

-RAMP B-

NORTH CAROLINA PROFESSIONAL ENGINEER SEAL 28479 KEVIN G. BAILEY 5-30-13

STV / Ralph Whitehead Associates, Inc.
1000 West Morehead St., Ste. 200
Charlotte, NC 28208
NC License No. F-0991

REVISIONS					
NO.	BY:	DATE:	NO.	BY:	DATE:
1			3		
2			4		

SHEET NO. S-596

TOTAL SHEETS 836

DRAWN BY : MM DATE : 10-12
CHECKED BY : YT DATE : 10-12

DESIGN ENGINEER OF RECORD: A. PETER DATE : 5-13

5/29/2013 6:29:24 PM R:\ustation\Finals\(II) Plan of Spans_RampB_Sheet 2 of 2.dgn

NOTES:

1. FOR COLLECTOR PIPE SUPPORTS, SEE SHEET 2 OF 4.
2. FOR ADDITIONAL NOTES, SEE SHEET 4 OF 4.

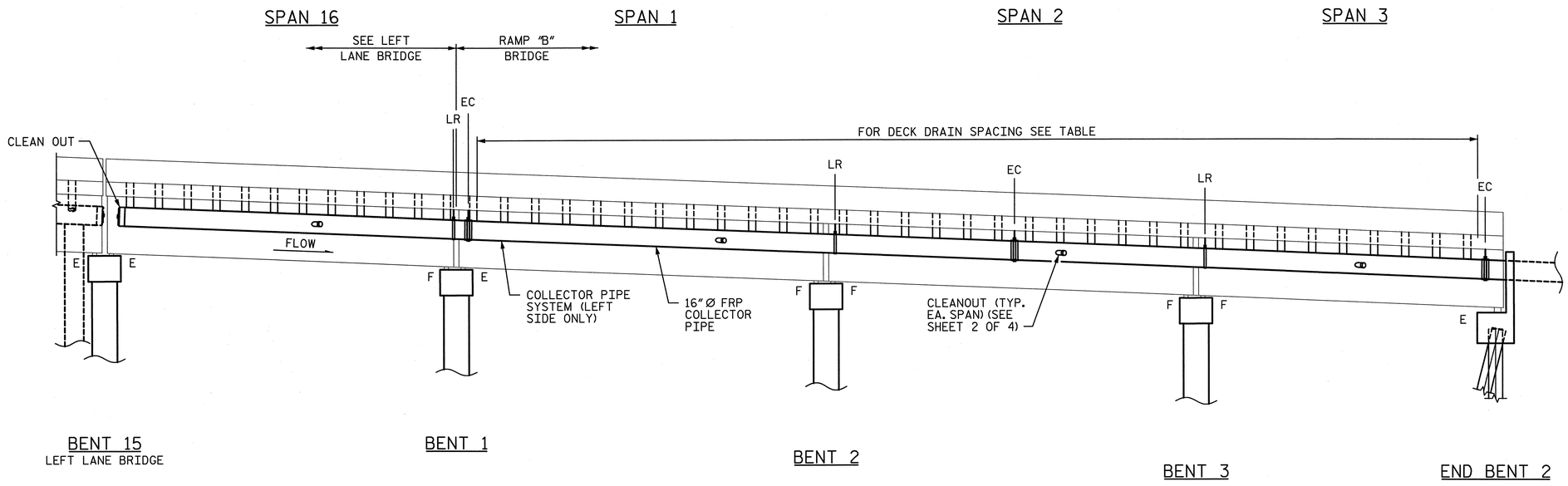

ELEVATION

EC = EXPANSION COUPLER (SEE SHEET 2 OF 4 FOR DETAILS)
LR = LONGITUDINAL RESTRAINT

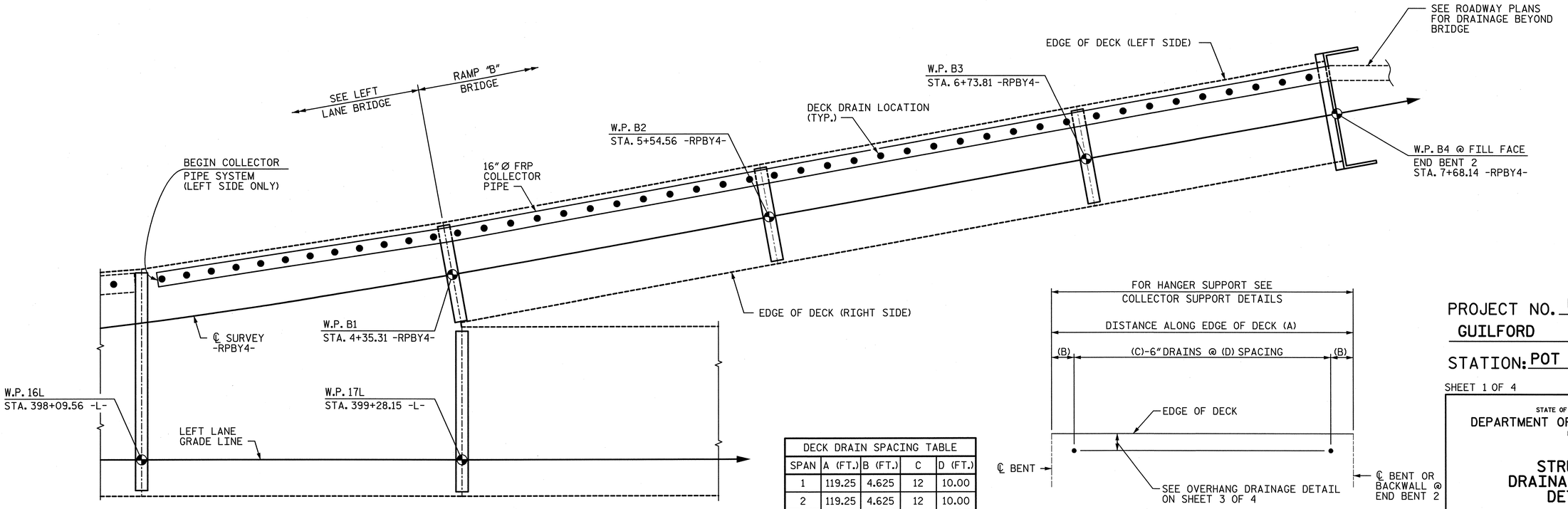

PLAN

(GIRDERS NOT SHOWN FOR CLARITY)

DECK DRAIN SPACING TABLE				
SPAN	A (FT.)	B (FT.)	C	D (FT.)
1	119.25	4.625	12	10.00
2	119.25	4.625	12	10.00
3	93.33	6.667	9	10.00

DRAIN LAYOUT DETAIL

NORTH CAROLINA PROFESSIONAL ENGINEER SEAL 28479 ENGINEER KEVIN G. BAILEY 5-30-13

PROJECT NO. U-2524C
GUILFORD COUNTY
STATION: POT 6+01.72 -RPBY4-

SHEET 1 OF 4

STATE OF NORTH CAROLINA
DEPARTMENT OF TRANSPORTATION
RALEIGH

STRUCTURE DRAINAGE SYSTEM DETAILS

-RAMP B-

REVISIONS					
NO.	BY:	DATE:	NO.	BY:	DATE:
1			3		
2			4		

SHEET NO. S-597
TOTAL SHEETS 836

DRAWN BY : CLG DATE : 2-13
CHECKED BY : TJT DATE : 3-13
DESIGN ENGINEER OF RECORD: T. TOWNSEND DATE : 5-13

STV / Ralph Whitehead Associates, Inc.
1000 West Morehead St., Ste. 200
Charlotte, NC 28208
NC License No. F-0991

5/30/2013 9:35:31 AM R:\ustation\Finals\U2\Closed Drainage System Sheet 1of 4.dgn

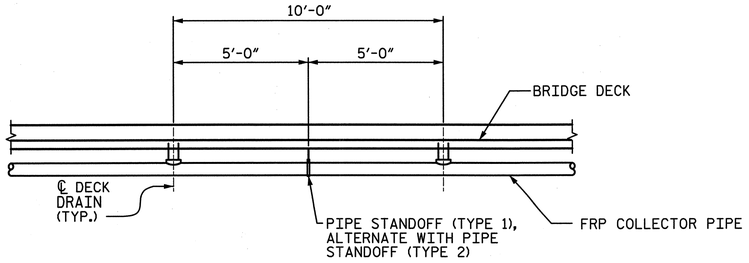

DETAIL "A"
(BETWEEN DECK DRAINS)

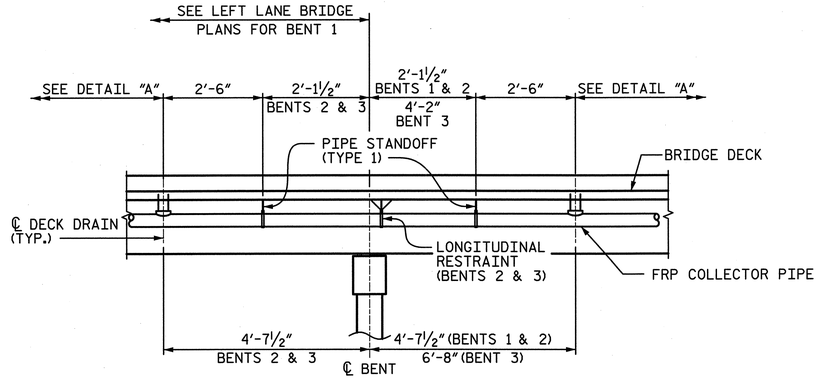

DETAIL "B"
(AT INTERIOR BENTS)

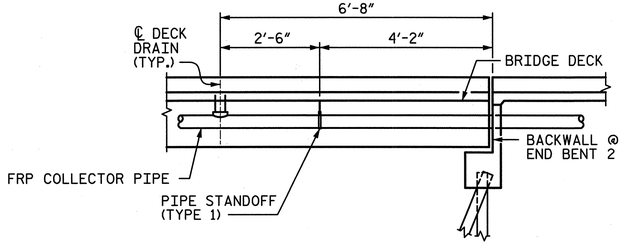

DETAIL "C"
(AT END BENT 2)

COLLECTOR SUPPORT DETAILS
(COUPLERS NOT SHOWN FOR CLARITY)

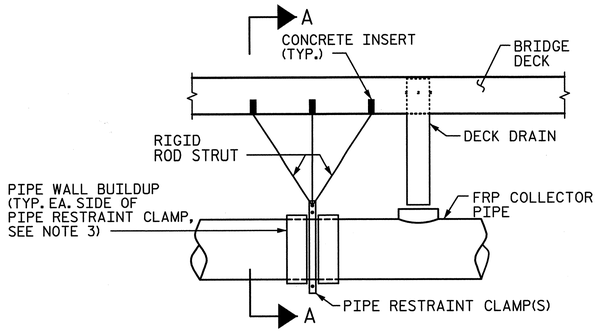

ELVEVATION VIEW

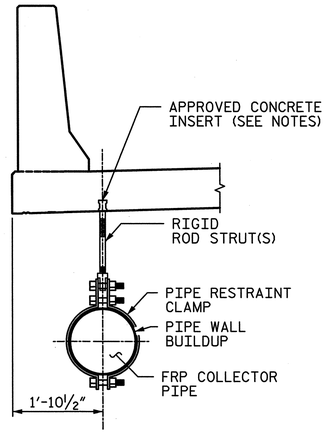

SECTION A-A

LONGITUDINAL RESTRAINT DETAIL

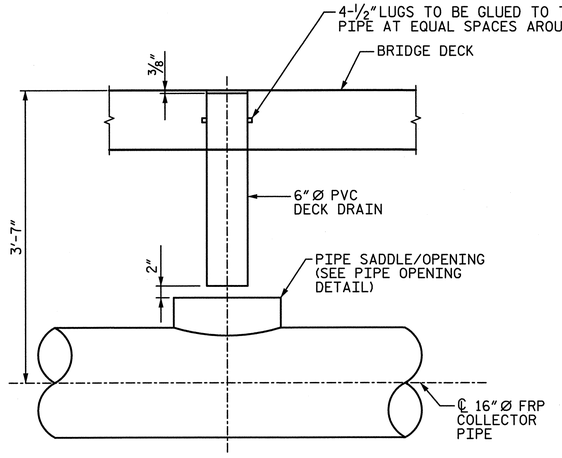

DRAIN OUTLET & PIPE CONNECTION

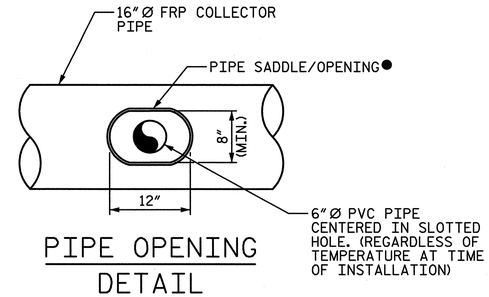

PIPE OPENING DETAIL

● FABRICATOR SHALL DETERMINE PIPE SADDLE/REINFORCEMENT FOR OPENING SIZE INDICATED. FABRICATOR SHALL SUBMIT SHOP DRAWINGS OF PIPE SADDLE/OPENING FOR REVIEW PRIOR TO BEGINNING FABRICATION.

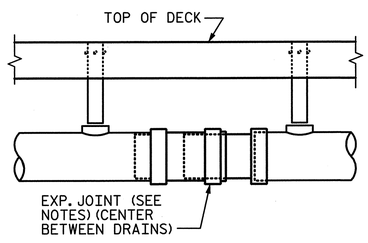

EXPANSION COUPLER

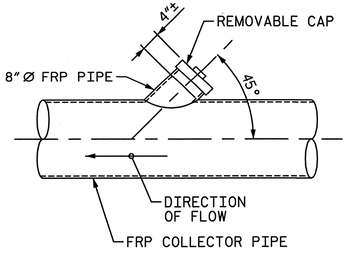

CLEANOUT DETAIL

NOTES:
1. FOR ADDITIONAL NOTES, SEE SHEET 4 OF 4.
2. FOR ADDITIONAL COLLECTOR PIPE SUPPORT DETAILS, SEE SHEET 3 OF 4.
3. CONTRACTOR SHALL ENSURE PIPE WALL BUILDUP IS SUFFICIENT TO ENGAGE PIPE RESTRAINT CLAMP AT LONGITUDINAL RESTRAINT LOCATIONS.

PROJECT NO. U-2524C
GUILFORD COUNTY
STATION: POT 6+01.72 -RPBY4-
SHEET 2 OF 4

STATE OF NORTH CAROLINA
DEPARTMENT OF TRANSPORTATION
RALEIGH

STRUCTURE DRAINAGE SYSTEM DETAILS
-RAMP B-

NORTH CAROLINA PROFESSIONAL SEAL 28479 ENGINEER KEVIN G. BAILEY 5-30-13

DRAWN BY : CLG	DATE : 2-13	DESIGN ENGINEER OF RECORD: T. TOWNSEND	DATE : 5-13
CHECKED BY : TJT	DATE : 3-13		

STV / Ralph Whitehead Associates, Inc.
1000 West Morehead St., Ste. 200
Charlotte, NC 28208
NC License No. F-0991

REVISIONS						SHEET NO.
NO.	BY:	DATE:	NO.	BY:	DATE:	S-598
1			3			TOTAL SHEETS
2			4			836

5/29/2013 10:01:56 AM R:\ustation\Finals\(13) Closed Drainage System Sheet 2 of 4.dgn

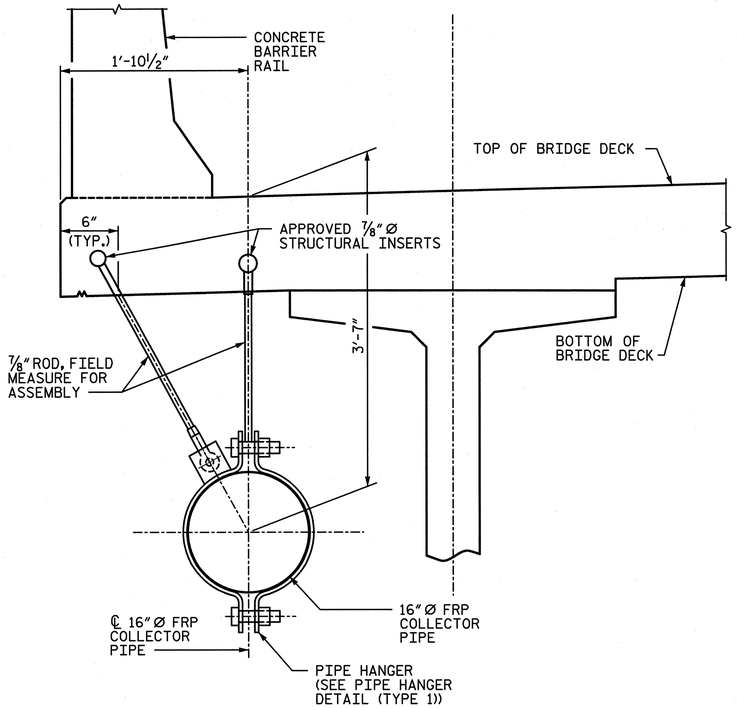

PIPE STANDOFF (TYPE 1)

ALL COMPONENTS SHALL BE GALVANIZED AFTER FABRICATION.

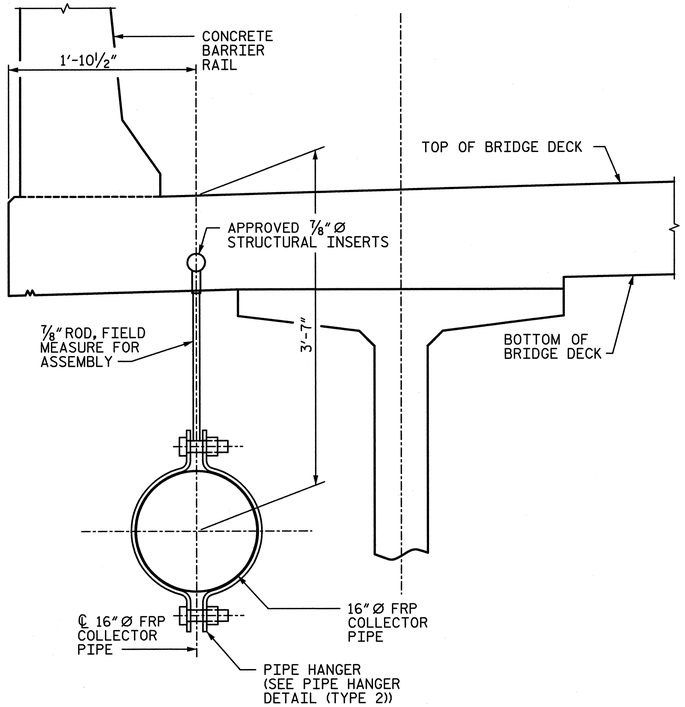

PIPE STANDOFF (TYPE 2)

ALL COMPONENTS SHALL BE GALVANIZED AFTER FABRICATION.

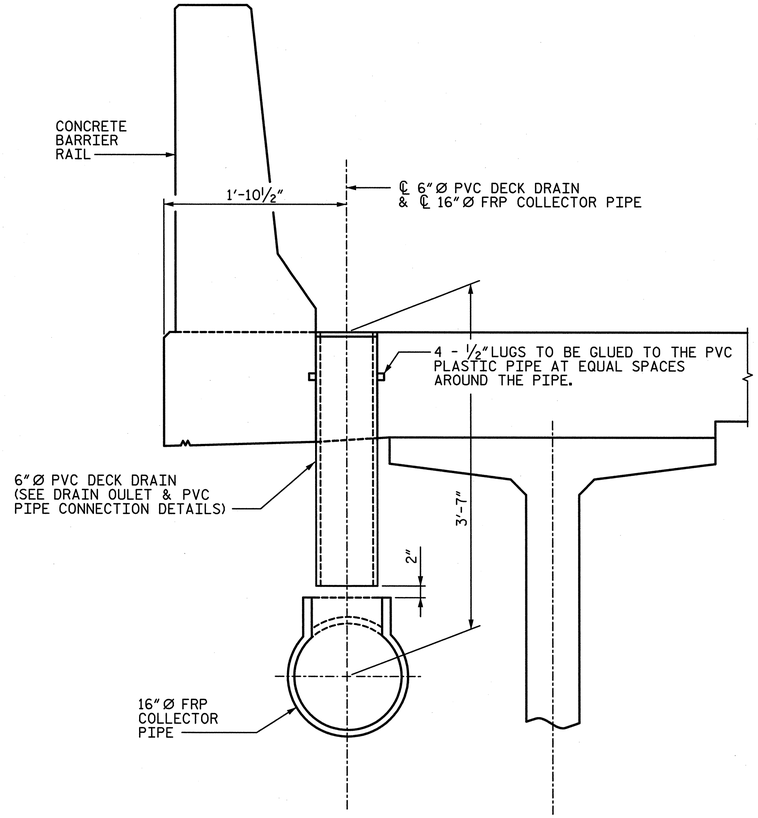

OVERHANG DRAINAGE DETAIL

(33 TOTAL)

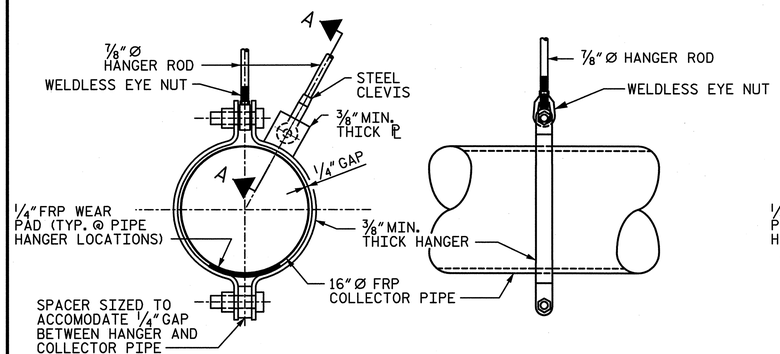

PIPE HANGER DETAIL (TYPE 1)

ALL COMPONENTS SHALL BE GALVANIZED AFTER FABRICATION.

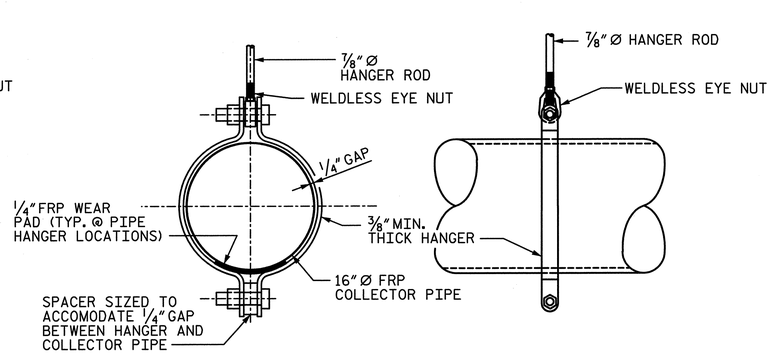

PIPE HANGER DETAIL (TYPE 2)

ALL COMPONENTS SHALL BE GALVANIZED AFTER FABRICATION.

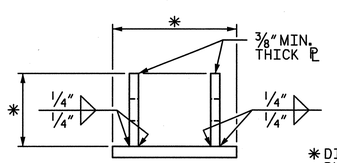

*DIMENSIONS TO BE DETERMINED BY MANUFACTURER.

SECTION A-A

(STEEL CLEVIS & ⅞"Ø HANGER ROD NOT SHOWN FOR CLARITY)

NOTES:

1. FOR ADDITIONAL NOTES, SEE SHEET 4 OF 4.

PROJECT NO. U-2524C

GUILFORD COUNTY

STATION: POT 6+01.72 -RPBY4-

SHEET 3 OF 4

STATE OF NORTH CAROLINA
DEPARTMENT OF TRANSPORTATION
RALEIGH

STRUCTURE DRAINAGE SYSTEM DETAILS

-RAMP B-

NORTH CAROLINA PROFESSIONAL SEAL 28479 ENGINEER KEVIN G. BAILEY 5-30-13

STV/ Ralph Whitehead Associates, Inc.
1000 West Morehead St., Ste. 200
Charlotte, NC 28208
NC License No. F-0991

REVISIONS						SHEET NO.
NO.	BY:	DATE:	NO.	BY:	DATE:	S-599
1			3			TOTAL SHEETS
2			4			834

DRAWN BY : CLG	DATE : 2-13	DESIGN ENGINEER OF RECORD: T. TOWNSEND	DATE : 5-13
CHECKED BY : TJT	DATE : 3-13		

5/29/2013 10:01:58 AM R:\ustation\Finals\(14) Closed Drainage System Sheet 3 of 4.dgn

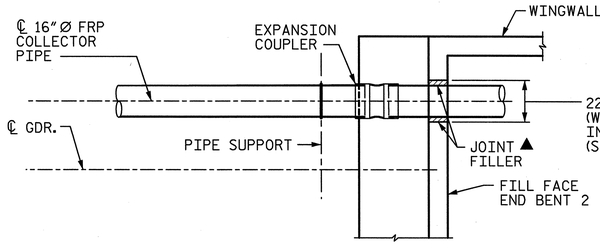

PLAN

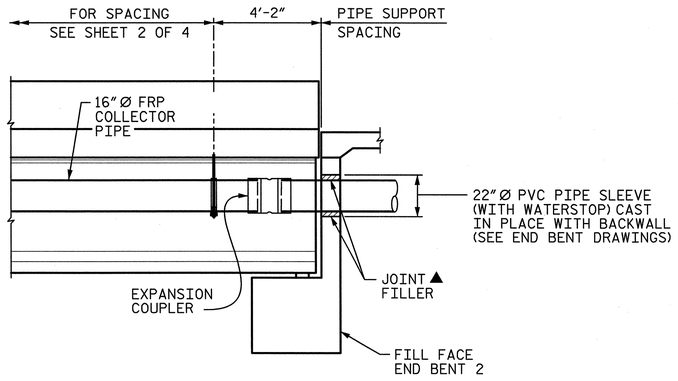

ELEVATION

COLLECTOR PIPE SYSTEM AT END BENT 2

▲ CENTER 20"Ø STEEL PIPE SLEEVE IN BLOCKOUT AND FILL ANNULAR SPACE AROUND PIPE WITH JOINT FILLER IN ACCORDANCE WITH STANDARD SPECIFICATION ARTICLE 1028-1

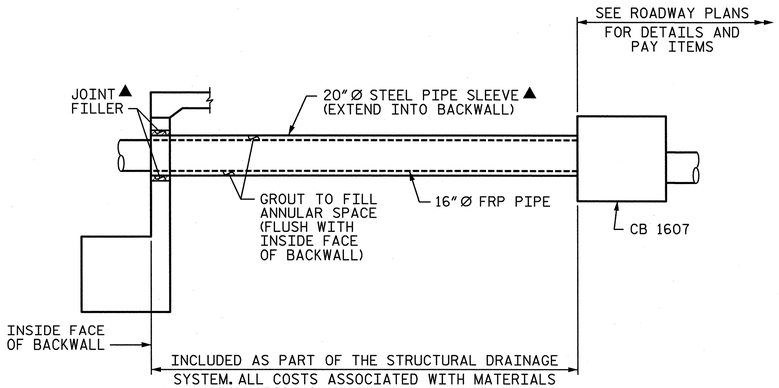

COLLECTOR PIPE SYSTEM BEYOND END BENT 2

ALL COMPONENTS OF COLLECTOR PIPE SYSTEM SHALL ACCOMODATE ANY FLARE/KINK NECESSARY TO REACH CATCH BASIN

CLOSED DRAINAGE SYSTEM NOTES

THE ENTIRE COST FOR THE LABOR AND MATERIALS NECESSARY TO FABRICATE AND INSTALL FRP PIPE, PIPE SUPPORT AND PIPE ANCHOR ASSEMBLIES SHALL BE INCLUDED IN THE LUMP SUM PRICE BID FOR THE "STRUCTURE DRAINAGE SYSTEM." SEE SPECIAL PROVISIONS FOR STRUCTURE DRAINAGE SYSTEM.

ALL COLLECTOR PIPES, ELBOWS, COUPLERS, AND TEES SHALL BE FIBERGLASS REINFORCED PLASTIC PIPE MEETING THE SPECIFICATIONS OF ASTM D2996 AND THE ACCELERATED UV WEATHERING PERFORMANCE REQUIREMENTS OF ASTM D4329-05 PER PROCEDURE ASTM G154.

EACH PIPE SECTION SHALL HAVE A MINIMUM OF TWO HANGERS.

COLLECTOR PIPE SHALL BE SUPPORTED FROM THE CONCRETE DECK SLAB. NO ATTACHMENT TO THE GIRDERS WILL BE PERMITTED.

CONTRACTOR SHALL PROVIDE FRP COUPLINGS CAPABLE OF HANDLING THE ANTICIPATED MOVEMENTS. ADDITIONALLY FRP COUPLINGS SHALL PROVIDE HORIZONTAL ALIGNMENT TOLERANCES SUCH THAT THE 16"Ø FRP COLLECTOR PIPE AND COUPLINGS CAN CLOSELY FOLLOW THE VERTICAL AND HORIZONTAL CURVE OF THE STRUCTURE.

THE CONTRACTOR SHALL BE RESPONSIBLE FOR DETERMINING THE HORIZONTAL AND VERTICAL ALIGNMENT OF THE DRAINAGE SYSTEM USING NECESSARY FITTINGS, TEES, AND WYES TO PROVIDE A CONTINUOUS DRAINAGE SYSTEM.

CONCRETE INSERTS SHALL HAVE A MINIMUM WORKING LOAD TENSION CAPACITY OF 4.5 KIPS.

CONTRACTOR SHALL VERIFY LOCATION OF CONCRETE INSERTS IN REGARD TO ADJACENT INSERTS AND DECK DRAINS. IF SPACING/LOCATION OF INSERTS RESULTS IN REDUCED INSERT CAPACITY, CONTRACTOR SHALL SUBMIT INSERT SYSTEM WITH APPROPRIATE CAPACITY, GIVEN CONSTRAINTS, OR PROVIDED ALTERNATE CONNECTION/SUPPORT DETAIL FOR REVIEW AND APPROVAL OF THE ENGINEER PRIOR TO INSTALLATION.

DECK DRAIN PIPE SHALL BE ASTM D1785, SCHEDULE 40. ALL PVC FITTINGS SHALL BE MINIMUM ASTM D2665, SCHEDULE 40.

EXPANSION JOINT COUPLERS IN THE COLLECTOR PIPE SHALL HAVE A MINIMUM CAPACITY TO ACCOMMODATE 6-INCHES OF TOTAL MOVEMENT (3-INCHES EXPANSION/3-INCHES CONTRACTION).

AN OPTIONAL DETAIL FOR THE LONGITUDINAL RESTRAINTS AND THE PIPE LATERAL GUIDE MAY BE SUBMITTED FOR APPROVAL.

COLLECTOR PIPE SUPPORTS SHALL BE LOCATED WITHIN 12-INCHES, ± 4-INCHES, OF A COLLECTOR PIPE JOINT.

DECK DOWN-DRAIN PIPES SHALL BE CENTERED IN SLOTTED OPENING IN COLLECTOR PIPE REGARDLESS OF TEMPERATURE AT TIME OF INSTALLATION.

HANGER RODS SHALL BE ASTM A193, GRADE B7 OR CARBON STEEL ALL-THREAD HANGER RODS.

NUTS SHALL BE ASTM A194, GRADE 2H, HEAVY HEX NUTS.

THE DETAILS OF ALL PIPING, HARDWARE, OR OTHER MATERIAL SHALL BE PROVIDED BY THE CONTRACTOR AND IS SUBJECT TO THE APPROVAL OF THE ENGINEER.

WORKING DRAWINGS FOR THE DRAINAGE SYSTEM AND LAYOUT PLANS INCLUDING, BUT NOT LIMITED TO, PIPE SUPPORT BRACKETS, PIPE ALIGNMENT, PIPE LENGTHS, AND ALL NECESSARY FITTINGS, ELBOWS, WYES, ADAPTERS, GUIDES, RESTRAINTS, WEAR PADS, COUPLERS AND JOINTS SHALL BE DESIGNED AND SEALED BY A PROFESSIONAL ENGINEER LICENSED IN NORTH CAROLINA AND SUBMITTED FOR APPROVAL PRIOR TO ORDERING MATERIALS.

PIPE MANUFACTURER SHALL ENSURE THE PIPE AND THE PIPE SUPPORT BEARING AREA IS DESIGNED IN ACCORDANCE WITH THE HANGER SPACING PROVIDED IN THESE PLANS.

PIPE DESIGN MUST ALLOW VERTICAL FLEXURE FROM THE SUPERSTRUCTURE.

THE COLLECTOR PIPE SHALL CLOSELY FOLLOW THE LONGITUDINAL GRADE OF THE STRUCTURE WHILE MAINTAINING A MINIMUM OF 0.5% SLOPE AT ALL TIMES.

COUPLERS SHALL BE DESIGNED TO ACCOMMODATE A TURN AT EACH BENT IN ORDER TO FOLLOW THE HORIZONTAL AND VERTICAL CURVATURE OF THE BRIDGE OVERHANG.

THE PIPE MANUFACTURER SHALL ENSURE THE FRICTIONAL FORCE REQUIRED TO ACTIVATE THE EXPANSION COUPLERS DOES NOT OVERSTRESS THE COUPLER WALL BUILD-UP, DRAINAGE SYSTEM BRACKET SUPPORTS, OR LATERAL RESTRAINT.

WASHERS SHALL BE ASTM F436 OR APPROVED EQUIVALENT.

BOLTS, NUTS, AND WASHERS SHALL BE GALVANIZED IN ACCORDANCE WITH THE STANDARD SPECIFICATIONS.

BOLT THREADS SHALL BE BURRED TO PREVENT LOOSENING.

PVC PIPE SHALL BE PAINTED TO MATCH THE FINAL SURFACE FINISH OF THE STRUCTURE WITH TWO COATS OF AN ACRYLIC OR LATEX PAINT THAT IS CHEMICALLY COMPATIBLE WITH PVC PRODUCTS AND MEETS THE REQUIREMENTS OF ARTICLE 1080-12 OF THE STANDARD SPECIFICATIONS. EACH COAT SHALL BE 2 DRY MILS THICK. DECK DRAINS SHALL BE ROUGHENED PRIOR TO PAINTING.

ALL METALLIC COMPONENTS IN THE DRAINAGE SYSTEM, EXCEPT STAINLESS STEEL AND MALLEABLE IRON PARTS, ARE REQUIRED TO BE HOT-DIPPED GALVANIZED PER NCDOT STANDARD SPECIFICATIONS. ELECTRO-PLATE COATING ON STEEL RODS, STEEL YOKE TYPE PIPE ROLLS, BRACKETS, OTHER STEEL HARDWARE IS CONSIDERED BY NCDOT AS TOO THIN FOR OUTDOOR APPLICATIONS.

ALL FRP PIPE AND PVC PIPE SHALL BE INSTALLED PER MANUFACTURER'S RECOMMENDATIONS.

ALL STRUCTURAL STEEL SHALL BE ASTM A36 OR APPROVED EQUAL UNLESS NOTED OTHERWISE.

THE GALVANIZED SURFACE SHALL BE CLEANED TO (SSPC SP-1) PRIOR TO COATING.

ALL FABRICATION SHALL CONFORM TO THE APPLICABLE SECTION OF THE NORTH CAROLINA DEPARTMENT OF TRANSPORTATION STANDARD SPECIFICATIONS FOR ROADS AND STRUCTURES.

ALL FRP PIPE SHALL BE PIGMENTED TO MATCH THE FINAL SURFACE FINISH OF THE ADJACENT STRUCTURE.

ALL FRP PIPE SIZES ARE SHOWN AS INSIDE DIAMETER SIZES.

FRP PIPE WITHIN EMBANKMENT AND PROJECTING THROUGH END BENT BACKWALL SHALL BE DESIGNED FOR THE APPLICATION BY THE PIPE ENGINEER.

FRP = FIBERGLASS REINFORCED PLASTIC

PROJECT NO. U-2524C

GUILFORD COUNTY

STATION: POT 6+01.72 -RPBY4-

SHEET 4 OF 4

NORTH CAROLINA PROFESSIONAL SEAL 28479 ENGINEER KEVIN G. BAILEY 5-30-13

STATE OF NORTH CAROLINA
DEPARTMENT OF TRANSPORTATION
RALEIGH

STRUCTURE DRAINAGE SYSTEM DETAILS

-RAMP B-

REVISIONS						SHEET NO.
NO.	BY:	DATE:	NO.	BY:	DATE:	S-600
1			3			TOTAL SHEETS
2			4			836

STV / Ralph Whitehead Associates, Inc.
1000 West Morehead St., Ste. 200
Charlotte, NC 28208
NC License No. F-0991

DRAWN BY : CLG	DATE : 2-13	DESIGN ENGINEER OF RECORD: T. TOWNSEND	DATE : 5-13
CHECKED BY : TJT	DATE : 3-13		

5/29/2013 10:02:00 AM R:\ustation\Finals\(15) Closed Drainage System Sheet 4 of 4.dgn

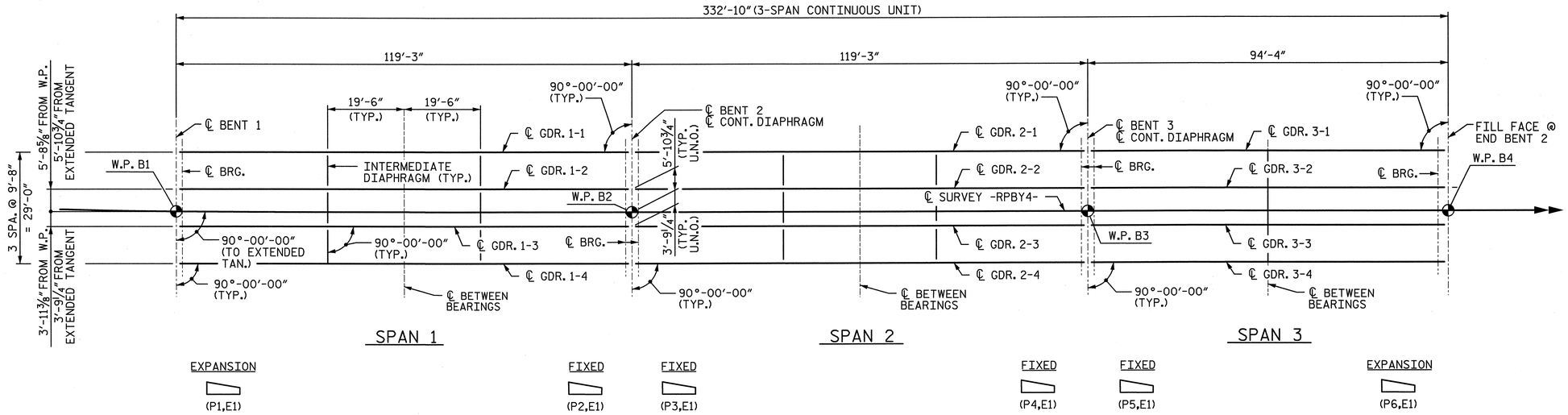

FRAMING PLAN - RAMP B

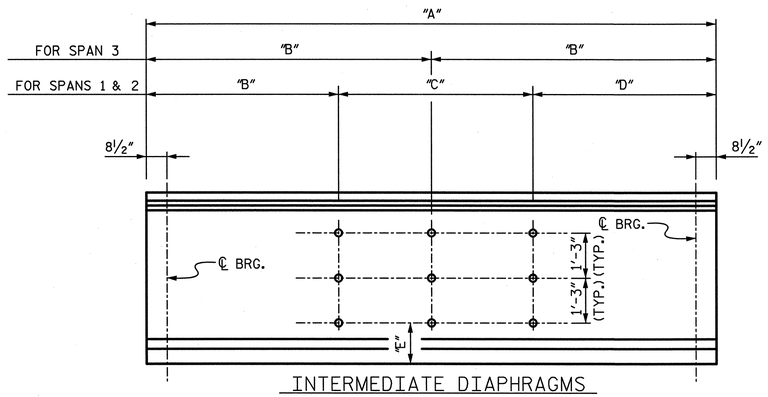

INTERMEDIATE DIAPHRAGMS

GIRDER ELEVATION

GIRDER DIMENSIONS						
GIRDER	"A"	"A" SLOPED	"B"	"C"	"D"	"E"
1-1	118'-5"	▲	39'-8½"	39'-0"	39'-8½"	2'-4¾"
1-2	118'-5"	▲	39'-8½"	39'-0"	39'-8½"	2'-4¾"
1-3	118'-5"	▲	39'-8½"	39'-0"	39'-8½"	2'-4¾"
1-4	118'-5"	▲	39'-8½"	39'-0"	39'-8½"	2'-4¾"
2-1	118'-5"	118'-5¾"	39'-8½"	39'-0"	39'-8½"	2'-4¾"
2-2	118'-5"	118'-5¾"	39'-8½"	39'-0"	39'-8½"	2'-4¾"
2-3	118'-5"	118'-5¾"	39'-8½"	39'-0"	39'-8½"	2'-4¾"
2-4	118'-5"	118'-5¾"	39'-8½"	39'-0"	39'-8½"	2'-4¾"
3-1	92'-6½"	▲	46'-3¼"	--	--	2'-4¾"
3-2	92'-6½"	▲	46'-3¼"	--	--	2'-4¾"
3-3	92'-6½"	▲	46'-3¼"	--	--	2'-4¾"
3-4	92'-6½"	▲	46'-3¼"	--	--	2'-4¾"

▲ SLOPE DIMENSIONS ARE NEGLIGIBLE

PROJECT NO. U-2524C

GUILFORD COUNTY

STATION: POT 6+01.72 -RPBY4-

NORTH CAROLINA PROFESSIONAL SEAL 28479 ENGINEER KEVIN G. BAILEY 5-30-13

STATE OF NORTH CAROLINA
DEPARTMENT OF TRANSPORTATION
RALEIGH

FRAMING PLAN

-RAMP B-

DRAWN BY : MM	DATE : 10-12	DESIGN ENGINEER OF RECORD: T. TOWNSEND	DATE : 5-13
CHECKED BY : YT	DATE : 10-12		

STV / Ralph Whitehead Associates, Inc.
1000 West Morehead St., Ste. 200
Charlotte, NC 28208
NC License No. F-0991

REVISIONS						SHEET NO.
NO.	BY:	DATE:	NO.	BY:	DATE:	S-601
1			3			TOTAL SHEETS
2			4			830

5/29/2013 10:02:02 AM R:\station\Finals\(16) Framing Plan, Ramp B.dgn

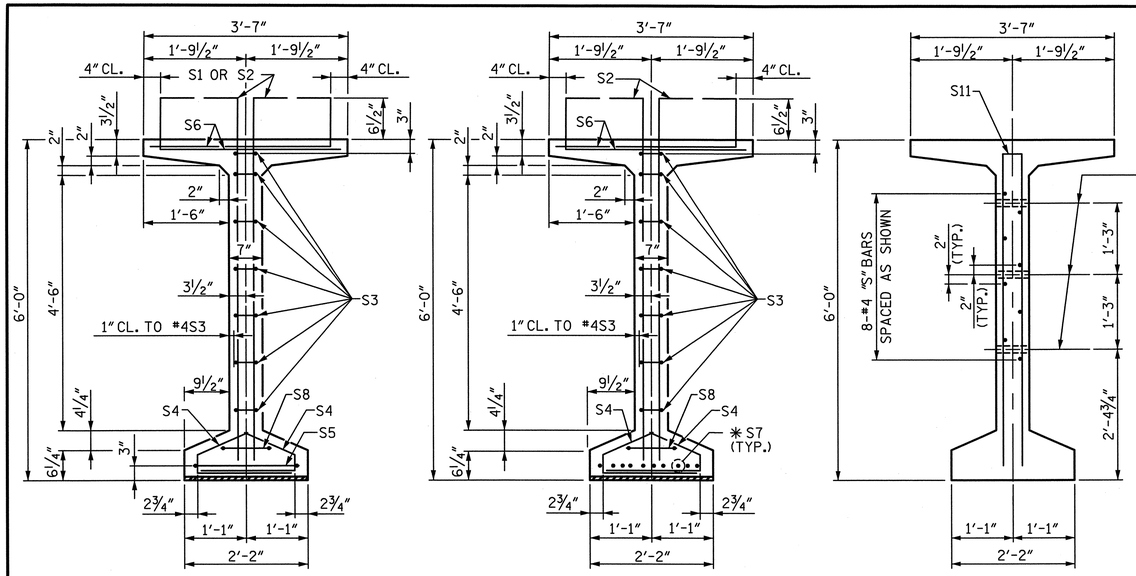

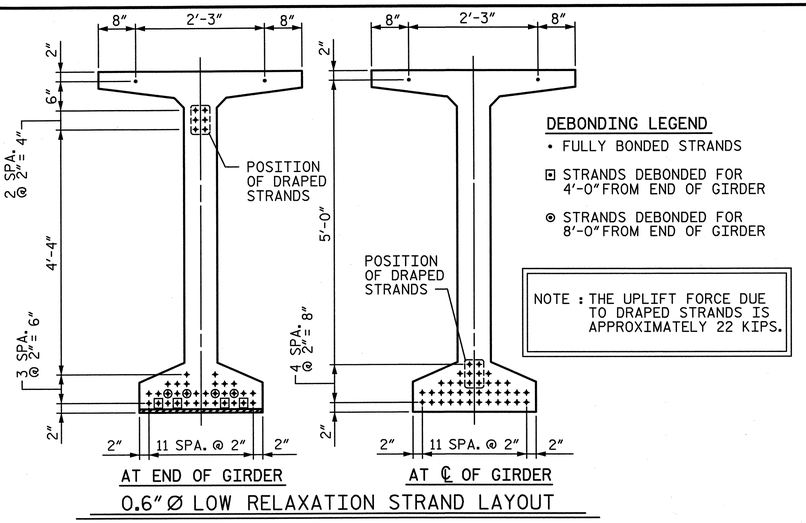

DEBONDING LEGEND

- FULLY BONDED STRANDS
- ⊡ STRANDS DEBONDED FOR 4'-0" FROM END OF GIRDER
- ⊙ STRANDS DEBONDED FOR 8'-0" FROM END OF GIRDER

NOTE : THE UPLIFT FORCE DUE TO DRAPED STRANDS IS APPROXIMATELY 22 KIPS.

✱FOR S7 BARS, SEE SECTION D-D ON "STANDARD PRESTRESSED CONCRETE GIRDER CONTINUOUS FOR LIVE LOAD DETAILS" SHEET.

0.6"Ø L. R. GRADE 270 STRANDS

AREA (SQUARE INCHES)	ULTIMATE STRENGTH (LBS. PER STRAND)	APPLIED PRESTRESS (LBS. PER STRAND)
0.217	58,600	43,950

REINFORCING STEEL FOR ONE GDR

BAR	NUMBER	SIZE	TYPE	LENGTH	WEIGHT
S1	200	#4	①	6'-10½"	919
S2	36	#6	①	6'-10½"	372
S3	14	#4	②	8'-5"	79
S4	96	#4	③	3'-0"	192
S5	1	#5	②	9'-10"	10
S6	132	#5	④	4'-4½"	602
✱S7	10	#5	STR.	3'-8"	38
S8	2	#5	②	9'-0"	19
S9	52	#5	STR.	3'-3"	176
S10	1	#3	STR.	1'-10"	1
S11	8	#5	②	11'-8"	97
S12	16	#4	STR.	8'-0"	86

✱NOTE: S7 BARS SHALL BE BENT BEFORE SHIPMENT. HEAT BENDING SHALL NOT BE ALLOWED.

BAR TYPES

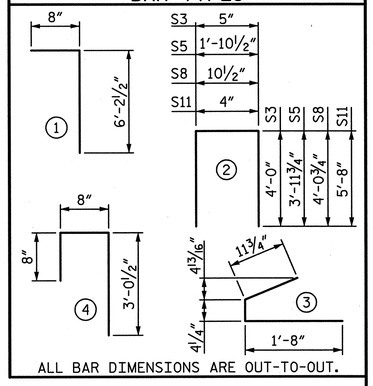

ALL BAR DIMENSIONS ARE OUT-TO-OUT.

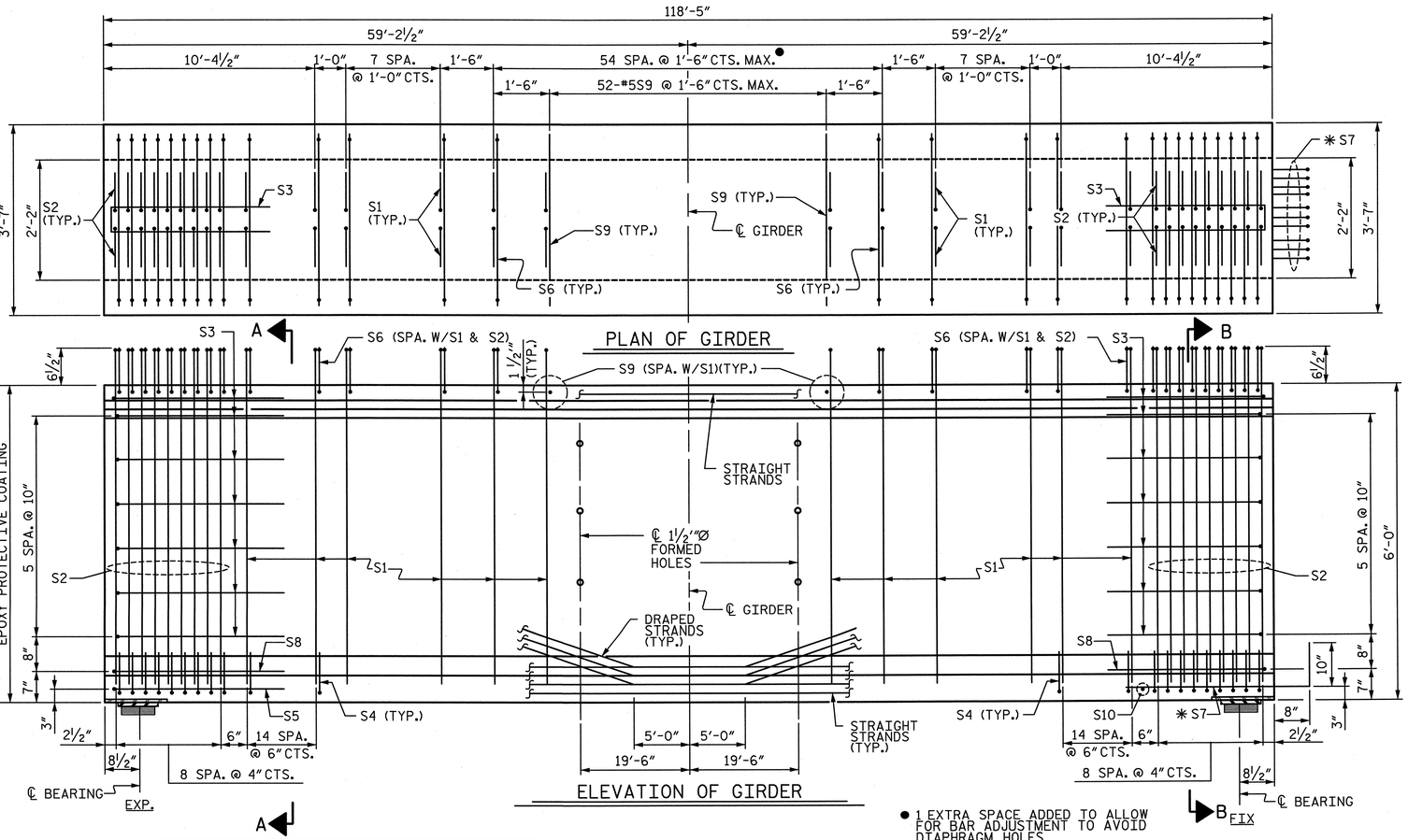

● 1 EXTRA SPACE ADDED TO ALLOW FOR BAR ADJUSTMENT TO AVOID DIAPHRAGM HOLES

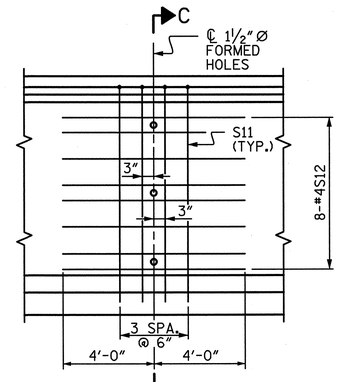

SHOWING INTERMEDIATE STEEL DIAPHRAGM REINFORCING STEEL FOR GIRDERS 1-4.

QUANTITIES FOR ONE GIRDER

	REINFORCING STEEL	8,000 PSI CONCRETE	0.6"Ø L.R. STRANDS
	LB.	C.Y.	No.
EXTERIOR GDR.	2,591	25.4	40
INTERIOR GDR.	2,591	25.4	40

GIRDERS REQUIRED

NUMBER	LENGTH	TOTAL LENGTH
4	118'-5"	473'-8"

PROJECT NO. U-2524C

GUILFORD COUNTY

STATION: POT 6+01.72 -RPBY4-

SHEET 1 OF 3

STATE OF NORTH CAROLINA
DEPARTMENT OF TRANSPORTATION
RALEIGH

72" PRESTRESSED CONCRETE MODIFIED BULB TEE CONTINUOUS FOR LIVE LOAD SPAN 1 -RAMP B-

NORTH CAROLINA PROFESSIONAL SEAL 28479 ENGINEER KEVIN G. BAILEY 5-30-13

DRAWN BY : YT	DATE : 10-12	DESIGN ENGINEER OF RECORD: T. TOWNSEND	DATE : 5-13
CHECKED BY : PLF	DATE : 10-12		

STV / Ralph Whitehead Associates, Inc.
1000 West Morehead St., Ste. 200
Charlotte, NC 28208
NC License No. F-0991

REVISIONS						SHEET NO.
NO.	BY:	DATE:	NO.	BY:	DATE:	S-602
1			3			TOTAL SHEETS
2			4			36

5/29/2013 10:02:05 AM R:\ustation\Finals\(17) MBT 72 Girder Sheet 1of 3.dgn

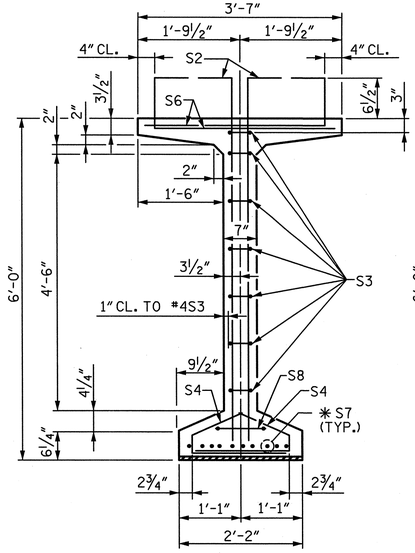

SECTION B-B

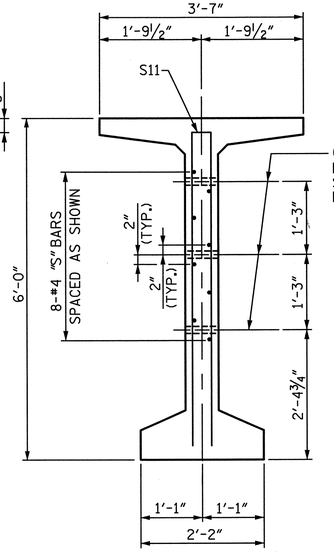

SECTION C-C

(S1 AND S9 BARS NOT SHOWN)

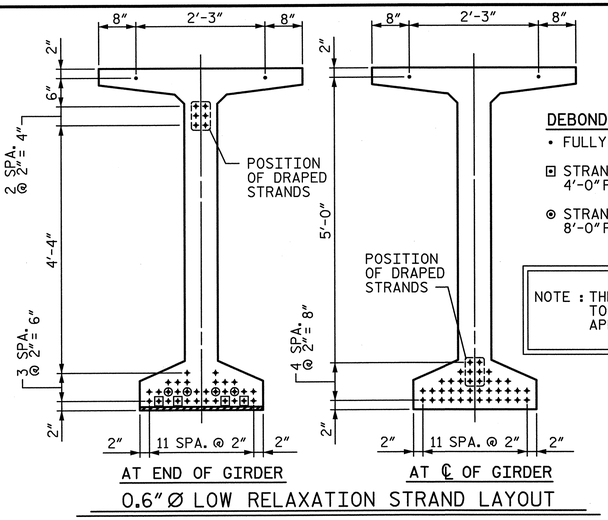

0.6"Ø LOW RELAXATION STRAND LAYOUT

DEBONDING LEGEND

- • FULLY BONDED STRANDS
- ⊡ STRANDS DEBONDED FOR 4'-0" FROM END OF GIRDER
- ⊙ STRANDS DEBONDED FOR 8'-0" FROM END OF GIRDER

NOTE : THE UPLIFT FORCE DUE TO DRAPED STRANDS IS APPROXIMATELY 22 KIPS.

✱FOR S7 BARS, SEE SECTION D-D ON "STANDARD PRESTRESSED CONCRETE GIRDER CONTINUOUS FOR LIVE LOAD DETAILS" SHEET.

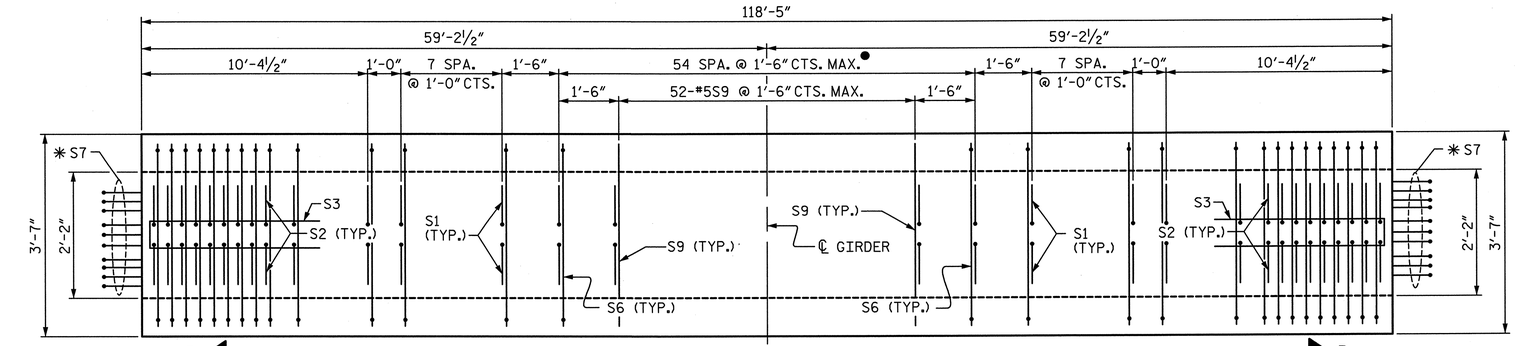

PLAN OF GIRDER

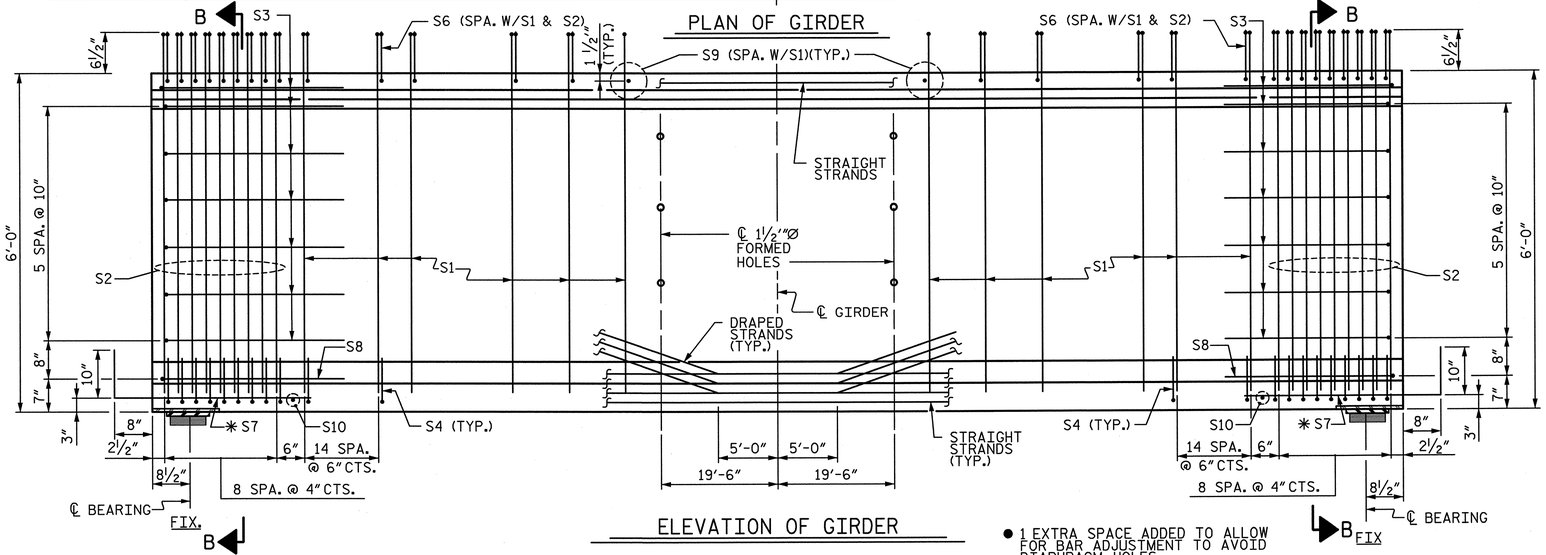

ELEVATION OF GIRDER

● 1 EXTRA SPACE ADDED TO ALLOW FOR BAR ADJUSTMENT TO AVOID DIAPHRAGM HOLES

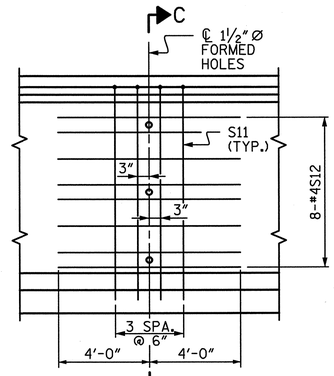

PARTIAL ELEVATION

SHOWING INTERMEDIATE STEEL DIAPHRAGM REINFORCING STEEL FOR GIRDERS 1-4.

0.6"Ø L. R. GRADE 270 STRANDS

AREA (SQUARE INCHES)	ULTIMATE STRENGTH (LBS. PER STRAND)	APPLIED PRESTRESS (LBS. PER STRAND)
0.217	58,600	43,950

REINFORCING STEEL FOR ONE GDR

BAR	NUMBER	SIZE	TYPE	LENGTH	WEIGHT
S1	200	#4	①	6'-10½"	919
S2	36	#6	①	6'-10½"	372
S3	14	#4	②	8'-5"	79
S4	96	#4	③	3'-0"	192
S6	132	#5	④	4'-4½"	602
✱S7	20	#5	STR.	3'-8"	76
S8	2	#5	②	9'-0"	19
S9	52	#5	STR.	3'-3"	176
S10	2	#3	STR.	1'-10"	1
S11	8	#5	②	11'-8"	97
S12	16	#4	STR.	8'-0"	86

✱NOTE: S7 BARS SHALL BE BENT BEFORE SHIPMENT. HEAT BENDING SHALL NOT BE ALLOWED.

BAR TYPES

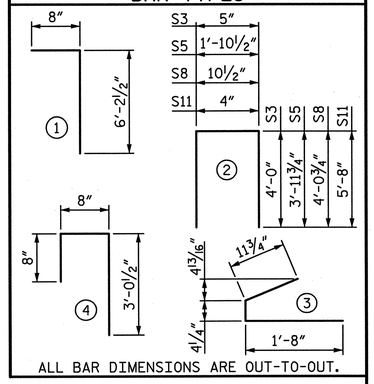

ALL BAR DIMENSIONS ARE OUT-TO-OUT.

QUANTITIES FOR ONE GIRDER

	REINFORCING STEEL	8,000 PSI CONCRETE	0.6"Ø L.R. STRANDS
	LB.	C.Y.	No.
EXTERIOR GDR.	2,619	25.4	40
INTERIOR GDR.	2,619	25.4	40

GIRDERS REQUIRED

NUMBER	LENGTH	TOTAL LENGTH
4	118'-5"	473'-8"

PROJECT NO. U-2524C

GUILFORD COUNTY

STATION: POT 6+01.72 -RPBY4-

SHEET 2 OF 3

STATE OF NORTH CAROLINA
DEPARTMENT OF TRANSPORTATION
RALEIGH

72" PRESTRESSED CONCRETE MODIFIED BULB TEE CONTINUOUS FOR LIVE LOAD SPAN 2 -RAMP B-

NORTH CAROLINA PROFESSIONAL SEAL 28479 ENGINEER KEVIN G. BAILEY 5-30-13

DRAWN BY : YT	DATE : 10-12	DESIGN ENGINEER OF RECORD: T. TOWNSEND	DATE : 5-13
CHECKED BY : PLF	DATE : 10-12		

STV / Ralph Whitehead Associates, Inc.
1000 West Morehead St., Ste. 200
Charlotte, NC 28208
NC License No. F-0991

REVISIONS						SHEET NO.
NO.	BY:	DATE:	NO.	BY:	DATE:	S-603
1			3			TOTAL SHEETS
2			4			36

5/29/2013 10:02:07 AM R:\station\Finals\(8) MBT 72 Girder Sheet 2 of 3.dgn

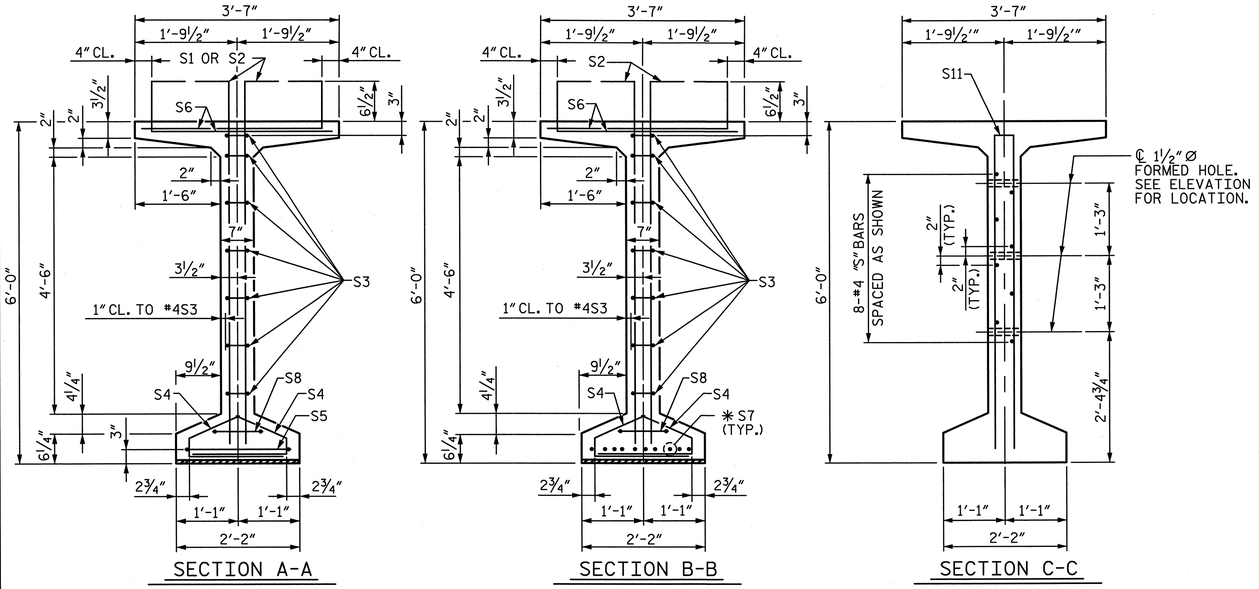

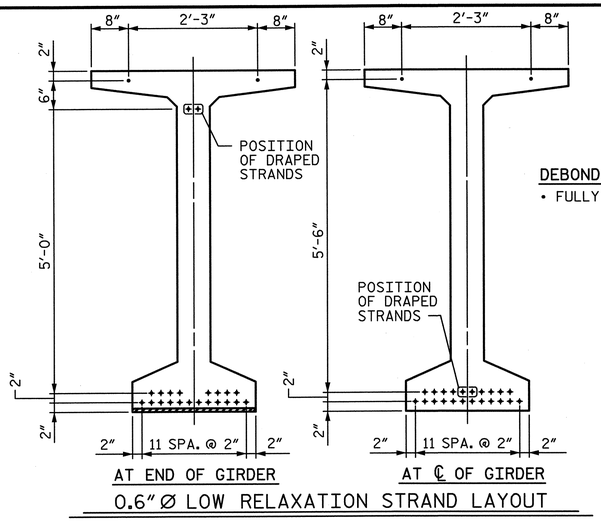

DEBONDING LEGEND
- FULLY BONDED STRANDS

*FOR S7 BARS, SEE SECTION D-D ON "STANDARD PRESTRESSED CONCRETE GIRDER CONTINUOUS FOR LIVE LOAD DETAILS" SHEET.

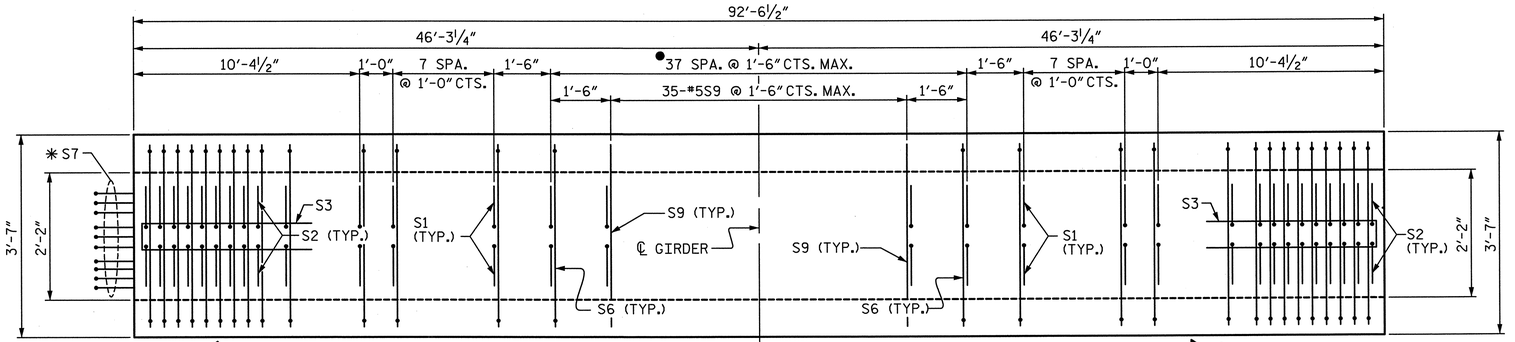

● 1 EXTRA SPACE ADDED TO ALLOW FOR BAR ADJUSTMENT TO AVOID DIAPHRAGM HOLES

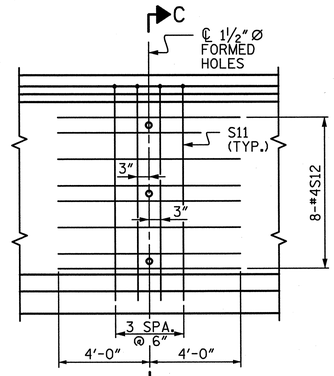

SHOWING INTERMEDIATE STEEL DIAPHRAGM REINFORCING STEEL FOR GIRDERS 1-4.

0.6"Ø L. R. GRADE 270 STRANDS

AREA (SQUARE INCHES)	ULTIMATE STRENGTH (LBS. PER STRAND)	APPLIED PRESTRESS (LBS. PER STRAND)
0.217	58,600	43,950

REINFORCING STEEL FOR ONE GDR

BAR	NUMBER	SIZE	TYPE	LENGTH	WEIGHT
S1	166	#4	①	6'-10½"	762
S2	36	#6	①	6'-10½"	372
S3	14	#4	②	8'-5"	79
S4	96	#4	③	3'-0"	192
S5	1	#5	②	9'-10"	10
S6	132	#5	④	4'-4½"	602
*S7	10	#5	STR.	3'-8"	38
S8	2	#5	②	9'-0"	19
S9	35	#5	STR.	3'-3"	119
S10	1	#3	STR.	1'-10"	1
S11	4	#5	②	11'-8"	49
S12	8	#4	STR.	8'-0"	43

*NOTE: S7 BARS SHALL BE BENT BEFORE SHIPMENT. HEAT BENDING SHALL NOT BE ALLOWED.

BAR TYPES

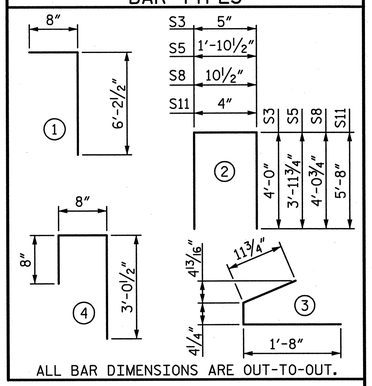

ALL BAR DIMENSIONS ARE OUT-TO-OUT.

QUANTITIES FOR ONE GIRDER

	REINFORCING STEEL	8,000 PSI CONCRETE	0.6"Ø L.R. STRANDS
	LB.	C.Y.	No.
EXTERIOR GDR.	2,286	19.8	24
INTERIOR GDR.	2,286	19.8	24

GIRDERS REQUIRED

NUMBER	LENGTH	TOTAL LENGTH
4	92'-6½"	370'-2"

PROJECT NO. U-2524C

GUILFORD COUNTY

STATION: POT 6+01.72 -RPBY4-

SHEET 3 OF 3

STATE OF NORTH CAROLINA
DEPARTMENT OF TRANSPORTATION
RALEIGH

72" PRESTRESSED CONCRETE MODIFIED BULB TEE CONTINUOUS FOR LIVE LOAD SPAN 3 -RAMP B-

NORTH CAROLINA PROFESSIONAL SEAL 28479 ENGINEER KEVIN G. BAILEY 5-30-13

DRAWN BY : YT	DATE : 10-12	DESIGN ENGINEER OF RECORD: T. TOWNSEND	DATE : 5-13
CHECKED BY : PLF	DATE : 10-12		

STV / Ralph Whitehead Associates, Inc.
1000 West Morehead St., Ste. 200
Charlotte, NC 28208
NC License No. F-0991

REVISIONS						SHEET NO.
NO.	BY:	DATE:	NO.	BY:	DATE:	S-604
1			3			TOTAL SHEETS
2			4			830

5/29/2013 10:02:09 AM R:\station\Finals\(9) MBT 72 Girder Sheet 3 of 3.dgn

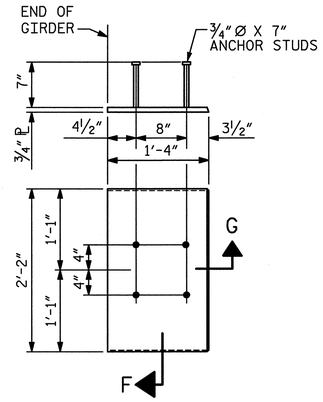

EMBEDDED PLATE "B-1" DETAILS FOR AASHTO 72" MODIFIED BULB TEES

(2 REQ'D. PER GIRDER)

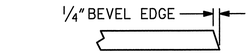

SECTION "G"

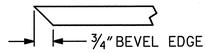

SECTION "F"

(SEE NOTES)

NOTES

ALL PRESTRESSING STRANDS SHALL BE 7-WIRE LOW-RELAXATION GRADE 270 STRANDS AND SHALL CONFORM TO AASHTO M203 EXCEPT FOR SAMPLING REQUIREMENTS WHICH SHALL BE IN ACCORDANCE WITH THE STANDARD SPECIFICATIONS.

ALL REINFORCING STEEL SHALL BE GRADE 60.

APPLY EPOXY PROTECTIVE COATING TO END OF GIRDER SURFACES INDICATED IN ELEVATION VIEW.

EMBEDDED PLATE "B-1" SHALL BE GALVANIZED IN ACCORDANCE WITH THE STANDARD SPECIFICATIONS. BEVEL EDGES OF PLATE "B-1" TO GIVE CLOSE FIT BUT NOT TIGHT FIT TO STEEL CASTING FORM.

ANCHOR STUDS SHALL CONFORM TO AASHTO M169 GRADES 1010 THROUGH 1020 OR APPROVED EQUAL, AND SHALL MEET THE TYPE "B" REQUIREMENTS OF SUBSECTION 7.3 OF THE ANSI/AASHTO/AWS D1.5 BRIDGE WELDING CODE.

AT ENDS OF GIRDERS TO BE EMBEDDED IN CONCRETE DIAPHRAGMS OR ENDWALLS, PRESTRESSING STRANDS MAY EXTEND A MAXIMUM OF 2" BEYOND THE GIRDER ENDS. OTHERWISE PRESTRESSED STRANDS SHALL BE CUT FLUSH WITH THE GIRDER ENDS.

THE TRANSFER OF LOAD FROM THE ANCHORAGES TO THE GIRDER SHALL BE DONE WHEN CONCRETE HAS REACHED A COMPRESSIVE STRENGTH OF NOT LESS THAN 6,400 PSI.

DEPENDING ON THE TYPE OF SYSTEM USED TO SUPPORT THE DECK SLAB FORMS, PRESET ANCHORS MAY BE NECESSARY IN THE PRESTRESSED CONCRETE GIRDER.

THE TOP SURFACE OF THE GIRDER, EXCLUDING THE OUTSIDE 4", SHALL BE RAKED TO A DEPTH OF ¼".

WHEN DRAPED STRANDS ARE DETAILED, THE LONGITUDINAL LOCATION OF THE HOLD DOWN DEVICES SHALL BE WITHIN 6" OF THE LOCATION SHOWN AND THE CENTER OF GRAVITY OF THE GROUP OF DRAPED STRANDS SHALL BE LOCATED WITHIN ½" OF THE THEORETICAL LOCATION SHOWN.

A 2" X 2" CHAMFER IS ALLOWED AT THE INTERSECTION OF THE WEB AND THE BOTTOM FLANGE.

THE CONTRACTOR HAS THE OPTION TO PROVIDE, AT NO ADDITIONAL COST TO THE DEPARTMENT, 2 ADDITIONAL STRANDS AT THE TOP OF THE GIRDER TO FACILITATE TYING OF THE REINFORCING STEEL. THESE STRANDS SHALL BE PULLED TO A LOAD OF 5,000 lbs.

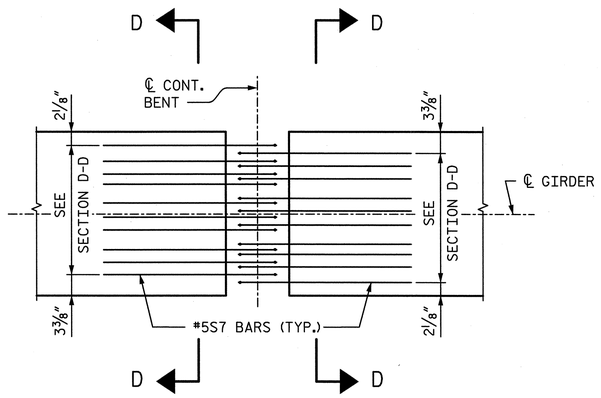

PLAN- BOTTOM FLANGE

EXTERIOR S7 BARS SHOWN, OTHERS OMITTED FOR CLARITY.

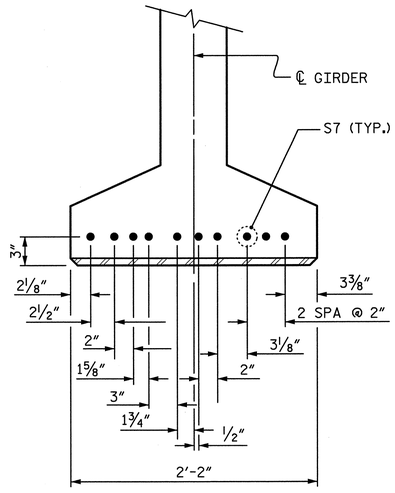

SECTION D-D

PROJECT NO. U-2524C

GUILFORD COUNTY

STATION: POT 6+01.72 -RPBY4-

STATE OF NORTH CAROLINA
DEPARTMENT OF TRANSPORTATION
RALEIGH

PRESTRESSED CONCRETE GIRDER CONTINUOUS FOR LIVE LOAD DETAILS

-RAMP B-

NORTH CAROLINA PROFESSIONAL SEAL 28479 ENGINEER KEVIN G. BAILEY 5-30-13

DRAWN BY : YT	DATE : 10-12	DESIGN ENGINEER OF RECORD: T. TOWNSEND	DATE : 5-13
CHECKED BY : PLF	DATE : 10-12		

STV / Ralph Whitehead Associates, Inc.
1000 West Morehead St., Ste. 200
Charlotte, NC 28208
NC License No. F-0991

REVISIONS						SHEET NO.
NO.	BY:	DATE:	NO.	BY:	DATE:	S-605
1			3			TOTAL SHEETS
2			4			836

5/29/2013 10:02:11 AM R:\ustation\Finals\(20) MBT 72 Girder Details.dgn

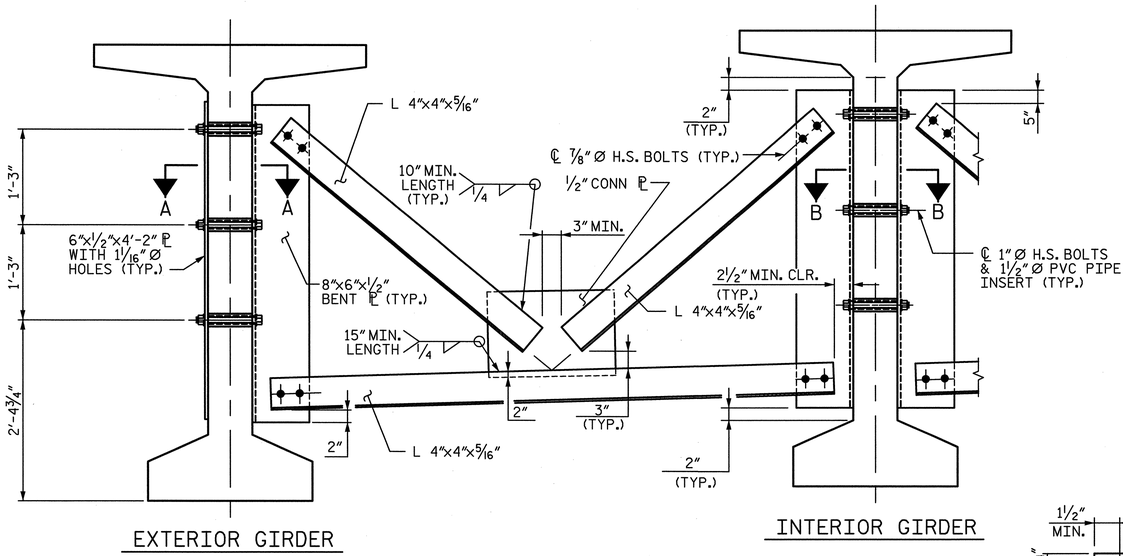

PART SECTION AT INTERMEDIATE DIAPHRAGM

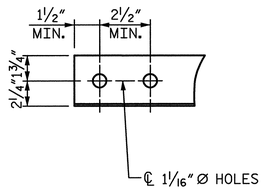

ANGLE END
(L 4"x4"x5/16")

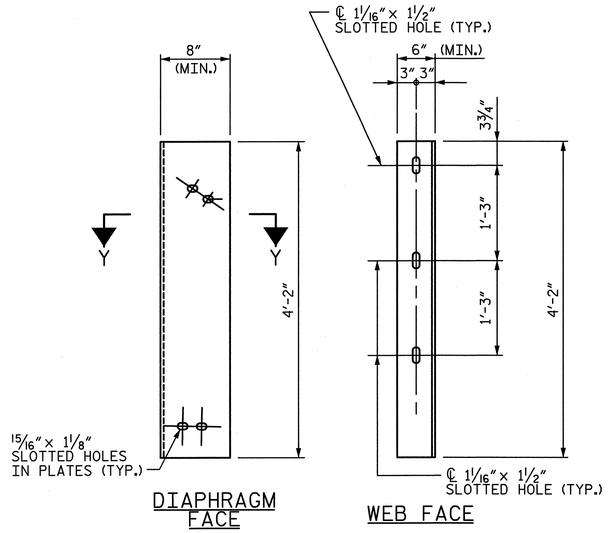

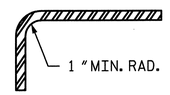

SECTION Y-Y

CONNECTOR PLATE DETAILS

STRUCTURAL STEEL NOTES

ALL INTERMEDIATE DIAPHRAGM STEEL AND CONNECTOR PLATES SHALL BE AASHTO M270 GRADE 50 OR APPROVED EQUAL.

TENSION ON THE ASTM A325 BOLTS THROUGH THE ANGLE MEMBER SHALL BE CALIBRATED USING DIRECT TENSION INDICATOR WASHERS IN ACCORDANCE WITH THE STANDARD SPECIFICATIONS.

TENSION ON THE ASTM A449 BOLTS THROUGH THE GIRDER WEB SHALL BE SNUG TIGHTENED FOLLOWED BY AN ADDITIONAL 1/4 TURN.

THE PLATES, BENT PLATES, AND ANGLES SHALL BE GALVANIZED OR METALLIZED IN ACCORDANCE WITH THE STANDARD SPECIFICATIONS. FOR THERMAL SPRAYED COATINGS (METALLIZATION), SEE SPECIAL PROVISIONS.

FOR METALLIZATION, APPLY AN 8 MIL THICK 99.99 PERCENT ZINC (W-Zn-1) THERMAL SPRAYED COATING WITH A 0.5 MIL THICK SEAL COAT TO ALL STEEL DIAPHRAGM SURFACES IN ACCORDANCE WITH THE THERMAL SPRAYED COATINGS SPECIAL PROVISION AND SECTION 442 OF THE STANDARD SPECIFICATIONS.

GALVANIZE THE HIGH STRENGTH BOLTS, NUTS, WASHERS AND DIRECT TENSION INDICATORS IN ACCORDANCE WITH THE STANDARD SPECIFICATIONS.

USE AN ASTM F436 HARDENED WASHER WITH STANDARD AND SLOTTED HOLES UNDER EACH BOLT HEAD AND NUT.

FOR BOLTS THROUGH THE GIRDER WEB, PROVIDE SUFFICIENT LENGTH OF THREADS ON ALL BOLTS TO ACCOMMODATE WASHERS AND THE THICKNESS OF CONNECTING MEMBER PLUS AT LEAST 1/4" PROJECTION BEYOND THE NUT.

INTERMEDIATE DIAPHRAGM ASSEMBLY SHALL COMPLY WITH SECTION 1072 OF THE STANDARD SPECIFICATIONS.

SUBMIT TWO SETS OF WORKING DRAWINGS FOR THE INTERMEDIATE DIAPHRAGM ASSEMBLY FOR REVIEW, COMMENTS AND ACCEPTANCE. AFTER REVIEW, COMMENTS, AND ACCEPTANCE, SUBMIT SEVEN SETS FOR DISTRIBUTION.

IN THE EXTERIOR BAYS, PLACE TEMPORARY STRUTS BETWEEN PRESTRESSED GIRDERS ADJACENT TO THE STEEL DIAPHRAGMS. STRUTS SHALL REMAIN IN PLACE 3 DAYS AFTER CONCRETE IS PLACED.

THE COST OF THE STEEL DIAPHRAGMS AND ASSEMBLIES SHALL BE INCLUDED IN THE UNIT PRICE BID FOR PRESTRESSED CONCRETE GIRDERS.

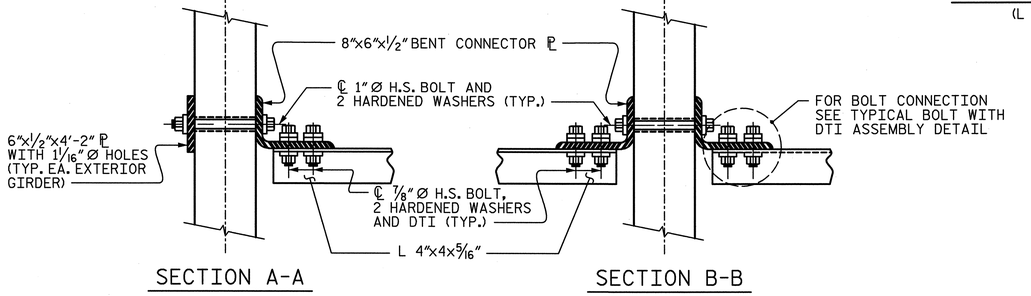

SECTION A-A SECTION B-B

CONNECTION DETAILS
(FOR SKEW = 90°)

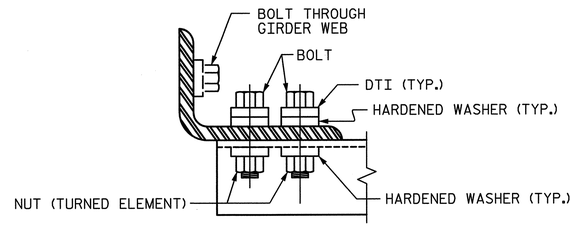

BOLT WITH DTI ASSEMBLY DETAIL

PROJECT NO. U-2524C
GUILFORD COUNTY
STATION: POT 6+01.72 -RPBY4-

STATE OF NORTH CAROLINA
DEPARTMENT OF TRANSPORTATION
RALEIGH

INTERMEDIATE STEEL DIAPHRAGMS FOR 72" MODIFIED BULB TEE PRESTRESSED CONCRETE GIRDERS

-RAMP B-

NORTH CAROLINA PROFESSIONAL SEAL 28479 ENGINEER KEVIN G. BAILEY
5-30-13

DRAWN BY : MM	DATE : 10-12	DESIGN ENGINEER OF RECORD: T. TOWNSEND	DATE : 5-13
CHECKED BY : YT	DATE : 10-12		

STV/ Ralph Whitehead Associates, Inc.
1000 West Morehead St., Ste. 200
Charlotte, NC 28208
NC License No. F-0991

REVISIONS						SHEET NO.
NO.	BY:	DATE:	NO.	BY:	DATE:	S-606
1			3			TOTAL SHEETS
2			4			836

5/29/2013 10:02:13 AM R:\ustation\Finals\(21) MBT 72 int SteelDiaph Details.dgn

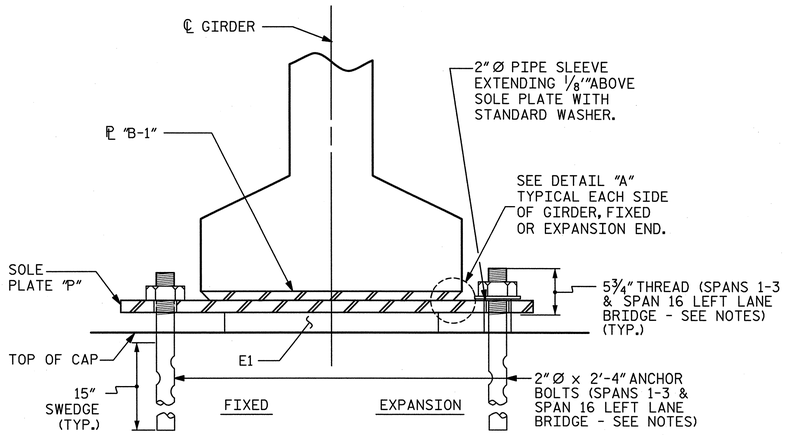

SECTION E-E

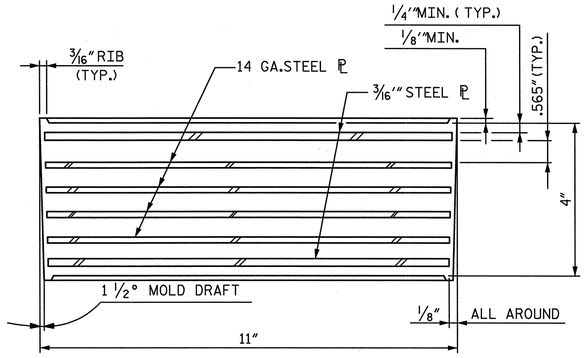

TYPICAL SECTION OF ELASTOMERIC BEARINGS

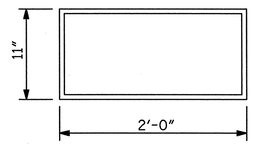

(24 REQ'D)

PLAN VIEW OF ELASTOMERIC BEARING

TYPE E1

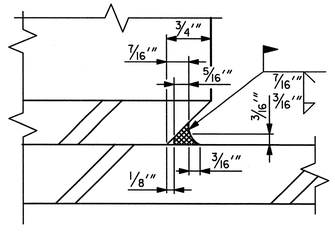

DETAIL "A"

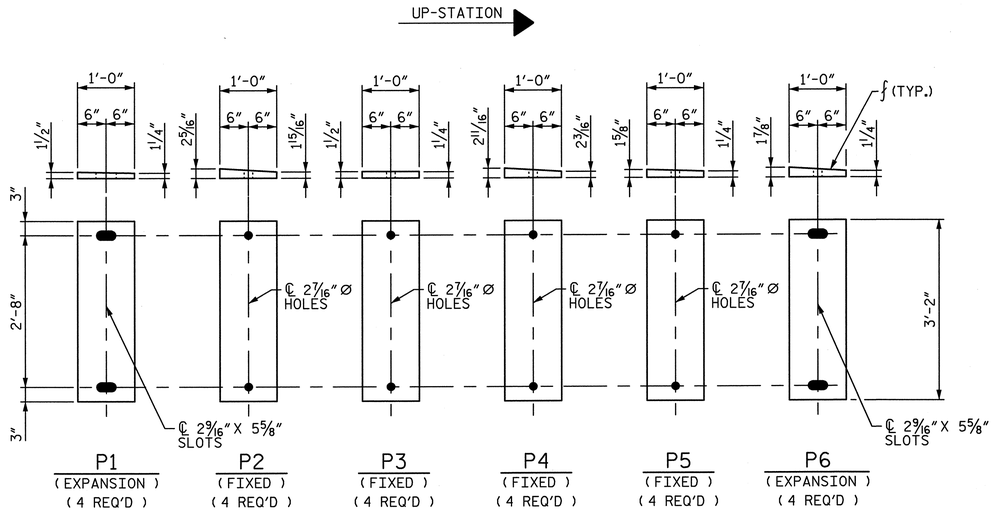

SOLE PLATE DETAILS ("P")

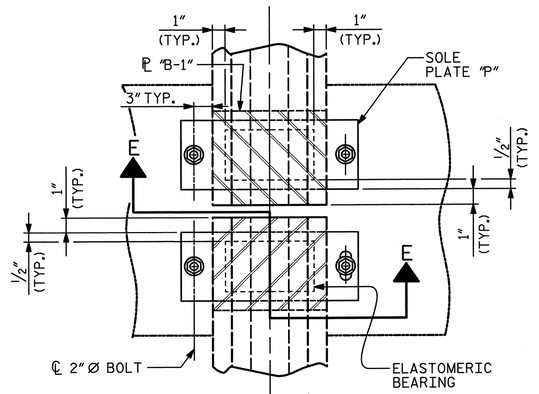

TYPICAL HALF-PLAN (SHOWING CONTINUOUS BENT)

TYPICAL HALF-PLAN (SHOWING SIMPLE SPAN BENT)

NOTES

AT ALL FIXED POINTS OF SUPPORT, NUTS FOR ANCHOR BOLTS ARE TO BE TIGHTENED FINGER TIGHT AND THEN BACKED OFF ½ TURN. THE THREAD OF THE NUT AND BOLT SHALL THEN BE BURRED WITH A SHARP POINTED TOOL.

THE 2"Ø PIPE SLEEVE SHALL BE CUT FROM SCHEDULE 40 PVC PLASTIC PIPE. THE PVC PLASTIC PIPE SHALL MEET THE REQUIREMENTS OF ASTM D1785.

STEEL SOLE PLATES, ANCHOR BOLTS, NUTS, AND WASHERS SHALL BE GALVANIZED IN ACCORDANCE WITH THE STANDARD SPECIFICATIONS.

PRIOR TO WELDING, GRIND THE GALVANIZED SURFACE OF THE PORTION OF THE EMBEDDED PLATE AND SOLE PLATE THAT ARE TO BE WELDED. AFTER WELDING, DAMAGED GALVANIZED SURFACES SHALL BE REPAIRED IN ACCORDANCE WITH THE STANDARD SPECIFICATIONS.

WHEN WELDING THE SOLE PLATE TO THE EMBEDDED PLATE IN THE GIRDER, USE TEMPERATURE INDICATING WAX PENS, OR OTHER SUITABLE MEANS, TO ENSURE THAT THE TEMPERATURE OF THE SOLE PLATE DOES NOT EXCEED 300°F. TEMPERATURES ABOVE THIS MAY DAMAGE THE ELASTOMER.

SOLE PLATE "P", BOLTS, NUTS, WASHERS, AND PIPE SLEEVE SHALL BE INCLUDED IN THE PAY ITEM FOR PRESTRESSED CONCRETE GIRDERS.

ANCHOR BOLTS SHALL MEET THE REQUIREMENTS OF ASTM A449. NUTS SHALL MEET THE REQUIREMENTS OF AASHTO M291-DH OR AASHTO M292-2H. WASHERS SHALL MEET THE REQUIREMENTS OF AASHTO M293. NO SHOP DRAWINGS ARE REQUIRED FOR ANCHOR BOLTS, NUTS AND WASHERS. SHOP INSPECTION IS REQUIRED.

ALL SURFACES OF BEARING PLATES SHALL BE SMOOTH AND STRAIGHT.

THE ELASTOMER IN THE STEEL REINFORCED BEARING SHALL HAVE A SHEAR MODULUS OF 0.160 KSI, IN ACCORDANCE WITH AASHTO M251.

FOR STEEL REINFORCED ELASTOMERIC BEARINGS, SEE SPECIAL PROVISIONS.

ALL BEARING PLATES SHALL BE M270 GRADE 50.

FOR ADDITIONAL DETAILS, SEE LEFT LANE BRIDGE PLANS.

— LOAD RATINGS —	
	MAX.D.L.+ L.L.
TYPE E1	412 K

PROJECT NO. U-2524C

GUILFORD COUNTY

STATION: POT 6+01.72 -RPBY4-

NORTH CAROLINA PROFESSIONAL SEAL 28479 ENGINEER KEVIN G. BAILEY 5-30-13

STATE OF NORTH CAROLINA
DEPARTMENT OF TRANSPORTATION
RALEIGH

ELASTOMERIC BEARING DETAILS

-RAMP B-

REVISIONS						SHEET NO.
NO.	BY:	DATE:	NO.	BY:	DATE:	S-607
1			3			TOTAL SHEETS
2			4			336

STV / Ralph Whitehead Associates, Inc.
1000 West Morehead St., Ste. 200
Charlotte, NC 28208
NC License No. F-0991

DRAWN BY : MM	DATE : 10-12	DESIGN ENGINEER OF RECORD: T. TOWNSEND	DATE : 5-13
CHECKED BY : YT	DATE : 10-12		

5/29/2013 10:02:16 AM R:\station\Finals\122 Elastomeric Brg Details.dgn

SPANS 1 & 2

	TWENTIETH POINTS	0.00	0.05	0.10	0.15	0.20	0.25	0.30	0.35	0.40	0.45	0.50	0.55	0.60	0.65	0.70	0.75	0.80	0.85	0.90	0.95	1.00
GIRDERS 1 & 4	CAMBER (GIRDER ALONE IN PLACE) (FT.)	0.000	0.072	0.137	0.194	0.243	0.285	0.319	0.345	0.364	0.376	0.380	0.376	0.364	0.345	0.319	0.285	0.243	0.194	0.137	0.072	0.000
	DEFLECTION DUE TO SUPERIMPOSED D.L. (FT.)**	0.000	-0.029	-0.058	-0.086	-0.112	-0.135	-0.155	-0.170	-0.182	-0.189	-0.191	-0.189	-0.182	-0.170	-0.155	-0.135	-0.112	-0.086	-0.058	-0.029	0.000
	FINAL CAMBER (IN.)	0"	1/2"	15/16"	1 5/16"	1 9/16"	1 13/16"	1 15/16"	2 1/8"	2 3/16"	2 1/4"	2 1/4"	2 1/4"	2 3/16"	2 1/8"	1 15/16"	1 13/16"	1 9/16"	1 5/16"	15/16"	1/2"	0"
GIRDERS 2 & 3	CAMBER (GIRDER ALONE IN PLACE) (FT.)	0.000	0.072	0.137	0.194	0.243	0.285	0.319	0.345	0.364	0.376	0.380	0.376	0.364	0.345	0.319	0.285	0.243	0.194	0.137	0.072	0.000
	DEFLECTION DUE TO SUPERIMPOSED D.L. (FT.)	0.000	-0.029	-0.057	-0.085	-0.111	-0.134	-0.153	-0.169	-0.180	-0.187	-0.189	-0.187	-0.180	-0.169	-0.153	-0.134	-0.111	-0.085	-0.057	-0.029	0.000
	FINAL CAMBER (IN.)	0"	1/2"	15/16"	1 5/16"	1 9/16"	1 13/16"	2"	2 1/8"	2 3/16"	2 1/4"	2 5/16"	2 1/4"	2 3/16"	2 1/8"	2"	1 13/16"	1 9/16"	1 5/16"	15/16"	1/2"	0"

SPAN 3

	TWENTIETH POINTS	0.00	0.05	0.10	0.15	0.20	0.25	0.30	0.35	0.40	0.45	0.50	0.55	0.60	0.65	0.70	0.75	0.80	0.85	0.90	0.95	1.00
GIRDERS 1 & 4	CAMBER (GIRDER ALONE IN PLACE) (FT.)	0.000	0.028	0.056	0.076	0.097	0.112	0.126	0.136	0.143	0.148	0.149	0.148	0.143	0.136	0.126	0.112	0.097	0.076	0.056	0.028	0.000
	DEFLECTION DUE TO SUPERIMPOSED D.L. (FT.)**	0.000	-0.010	-0.020	-0.030	-0.039	-0.047	-0.054	-0.059	-0.063	-0.066	-0.067	-0.066	-0.063	-0.059	-0.054	-0.047	-0.039	-0.030	-0.020	-0.010	0.000
	FINAL CAMBER (IN.)	0"	3/16"	7/16"	9/16"	11/16"	3/4"	7/8"	15/16"	15/16"	1"	1"	1"	15/16"	15/16"	7/8"	3/4"	11/16"	9/16"	7/16"	3/16"	0"
GIRDERS 2 & 3	CAMBER (GIRDER ALONE IN PLACE) (FT.)	0.000	0.028	0.056	0.076	0.097	0.112	0.126	0.136	0.143	0.148	0.149	0.148	0.143	0.136	0.126	0.112	0.097	0.076	0.056	0.028	0.000
	DEFLECTION DUE TO SUPERIMPOSED D.L. (FT.)**	0.000	-0.010	-0.020	-0.030	-0.040	-0.048	-0.055	-0.060	-0.064	-0.067	-0.068	-0.067	-0.064	-0.060	-0.055	-0.048	-0.040	-0.030	-0.020	-0.010	0.000
	FINAL CAMBER (IN.)	0"	3/16"	7/16"	9/16"	11/16"	3/4"	7/8"	15/16"	15/16"	1"	1"	1"	15/16"	15/16"	7/8"	3/4"	11/16"	9/16"	7/16"	3/16"	0"

** INCLUDES FUTURE WEARING SURFACE IN SUPERIMPOSED DEAD LOAD

CAMBER SIGN CONVENTION

NOTE:
1. ALL VALUES ARE SHOWN IN FEET (DECIMAL FORM), EXCEPT "FINAL CAMBER", WHICH IS GIVEN IN INCHES (FRACTION FORM).

PROJECT NO. U-2524C
GUILFORD COUNTY
STATION: POT 6+01.72 -RPBY4-

STATE OF NORTH CAROLINA
DEPARTMENT OF TRANSPORTATION
RALEIGH

72" PRESTRESSED CONCRETE MODIFIED BULB TEE CAMBERS

-RAMP B-

DRAWN BY : YT	DATE : 9-12	DESIGN ENGINEER OF RECORD: T. TOWNSEND	DATE : 5-13
CHECKED BY : PLF	DATE : 9-12		

STV / Ralph Whitehead Associates, Inc.
1000 West Morehead St., Ste. 200
Charlotte, NC 28208
NC License No. F-0991

REVISIONS						SHEET NO.
NO.	BY:	DATE:	NO.	BY:	DATE:	S-608
1			3			TOTAL SHEETS
2			4			836

5/29/2013 6:29:26 PM R:\ustation\Finals\(23) MBT 72 Girder Camber.dgn

NOTES

THE BARRIER RAIL IN EACH SPAN SHALL NOT BE CAST UNTIL ALL SLAB CONCRETE IN THAT SPAN HAS BEEN CAST AND HAS REACHED A MINIMUM COMPRESSIVE STRENGTH OF 3,000 PSI.

ALL REINFORCING STEEL IN BARRIER RAILS SHALL BE EPOXY COATED.

GROOVED CONTRACTION JOINTS, ½" IN DEPTH, SHALL BE TOOLED IN ALL EXPOSED FACES OF THE BARRIER RAIL AND IN ACCORDANCE WITH ARTICLE 825-10(B) OF THE STANDARD SPECIFICATIONS. THE CONTRACTION JOINT SHALL BE LOCATED AT EACH THIRD POINT BETWEEN BARRIER RAIL EXPANSION JOINTS. ONLY ONE CONTRACTION JOINT IS REQUIRED AT MIDPOINT OF BARRIER RAIL SEGMENTS LESS THAN 20 FEET IN LENGTH AND NO CONTRACTION JOINTS ARE REQUIRED FOR THOSE SEGMENTS LESS THAN 10 FEET IN LENGTH.

FOR END OF RAIL VIEWS, SEE BRIDGE APPROACH SLAB SHEETS.

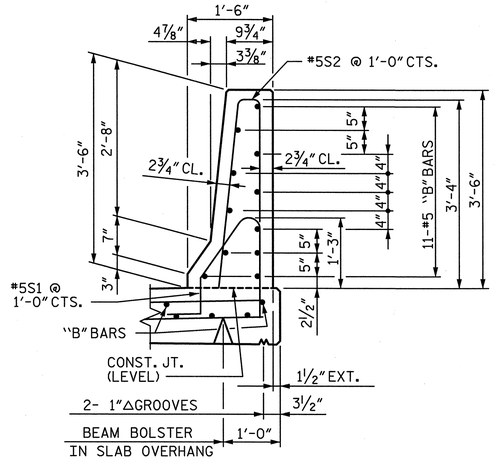

SECTION THRU RAIL

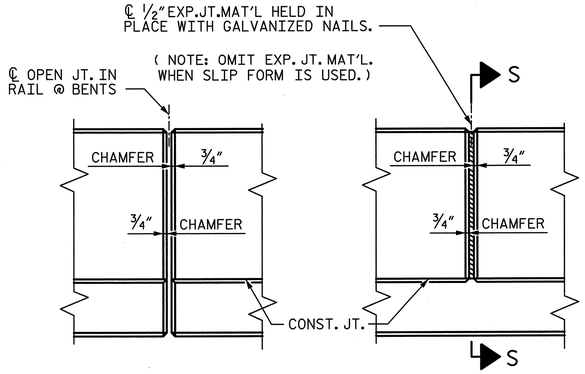

ELEVATION AT EXPANSION JOINTS

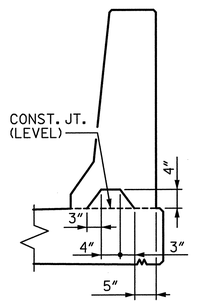

SECTION S-S
AT DAM IN OPEN JOINT
(THIS IS TO BE USED ONLY WHEN SLIP FORM IS USED)

BAR TYPES

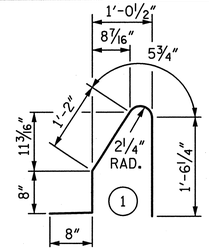

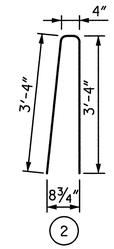

ALL BAR DIMENSIONS ARE OUT TO OUT

BILL OF MATERIAL

FOR CONCRETE BARRIER RAIL ONLY

BAR	NO.	SIZE	TYPE	LENGTH	WEIGHT
* B1	44	#5	STR	18'-10"	864
* B2	242	#5	STR	24'-7"	6205
* B3	22	#5	STR	17'-10"	409
* S1	664	#5	1	4'-6"	3116
* S2	664	#5	2	7'-0"	4848

* EPOXY COATED REINFORCING STEEL	15,442 LBS.
CLASS AA CONCRETE	90.3 CU. YDS.
CONCRETE BARRIER RAIL ▲	683.6 LIN. FT.

▲ BARRIER RAIL ON APPROACH SLAB INCLUDED

PROJECT NO. U-2524C

GUILFORD COUNTY

STATION: POT 6+01.72 -RPBY4-

SHEET 1 OF 3

BARRIER RAIL DETAILS

NORTH CAROLINA PROFESSIONAL SEAL 28479 ENGINEER KEVIN G. BAILEY 5-30-13

STATE OF NORTH CAROLINA
DEPARTMENT OF TRANSPORTATION
RALEIGH

CONCRETE BARRIER RAIL

-RAMP B-

DRAWN BY : MM	DATE : 10-12	DESIGN ENGINEER OF RECORD: T. TOWNSEND	DATE : 5-13
CHECKED BY : YT	DATE : 10-12		

STV / Ralph Whitehead Associates, Inc.
1000 West Morehead St., Ste. 200
Charlotte, NC 28208
NC License No. F-0991

REVISIONS					
NO.	BY:	DATE:	NO.	BY:	DATE:
1			3		
2			4		

SHEET NO. S-609

TOTAL SHEETS 830

5/29/2013 10:02:20 AM R:\ustation\Finals\(24) Plan of Rails Sheet 1 of 3.dgn

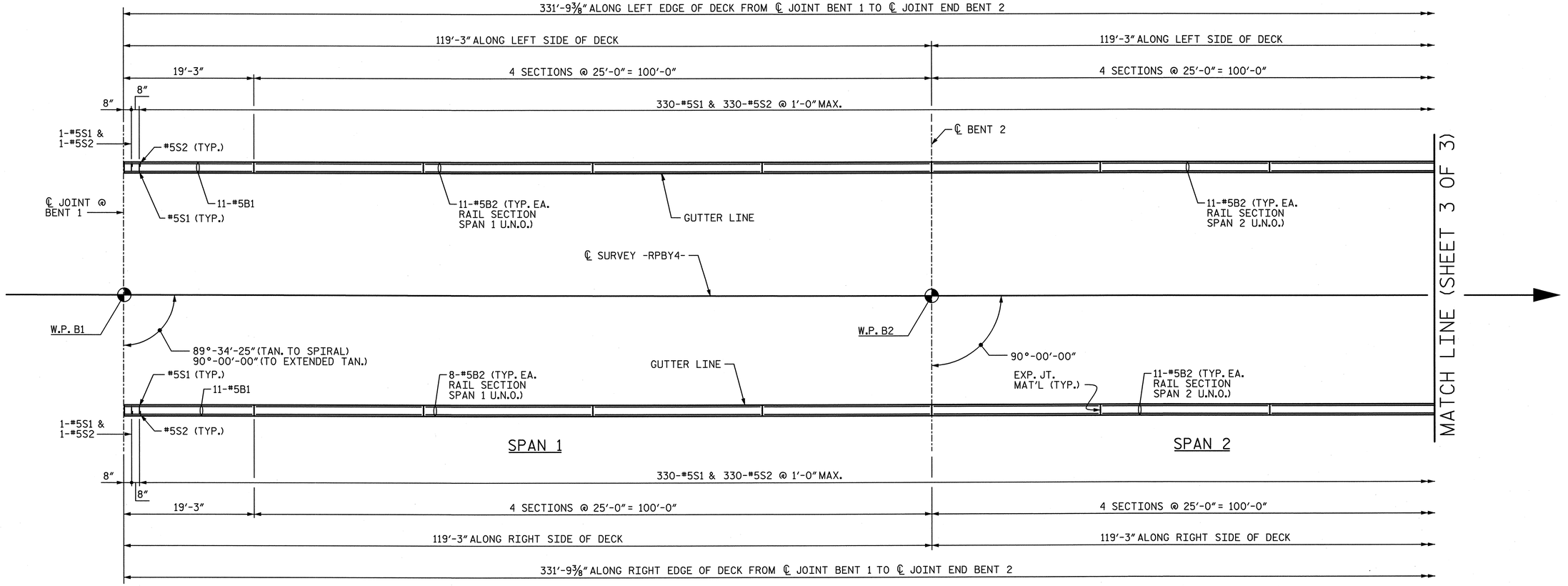

PLAN

PROJECT NO. U-2524C

GUILFORD COUNTY

STATION: POT 6+01.72 -RPBY4-

SHEET 2 OF 3

STATE OF NORTH CAROLINA
DEPARTMENT OF TRANSPORTATION
RALEIGH

PLAN OF RAILS
CONCRETE BARRIER RAIL

-RAMP B-

NORTH CAROLINA PROFESSIONAL ENGINEER SEAL 28479 KEVIN G. BAILEY
5-30-13

STV / Ralph Whitehead Associates, Inc.
1000 West Morehead St., Ste. 200
Charlotte, NC 28208
NC License No. F-0991

REVISIONS						SHEET NO.
NO.	BY:	DATE:	NO.	BY:	DATE:	S-610
1			3			TOTAL SHEETS
2			4			336

DRAWN BY : MM DATE : 10-12
CHECKED BY : YT DATE : 10-12
DESIGN ENGINEER OF RECORD: T. TOWNSEND DATE : 5-13

5/29/2013 10:02:22 AM R:\ustation\Finals\(25) Plan of Rails Sheet 2 of 3.dgn

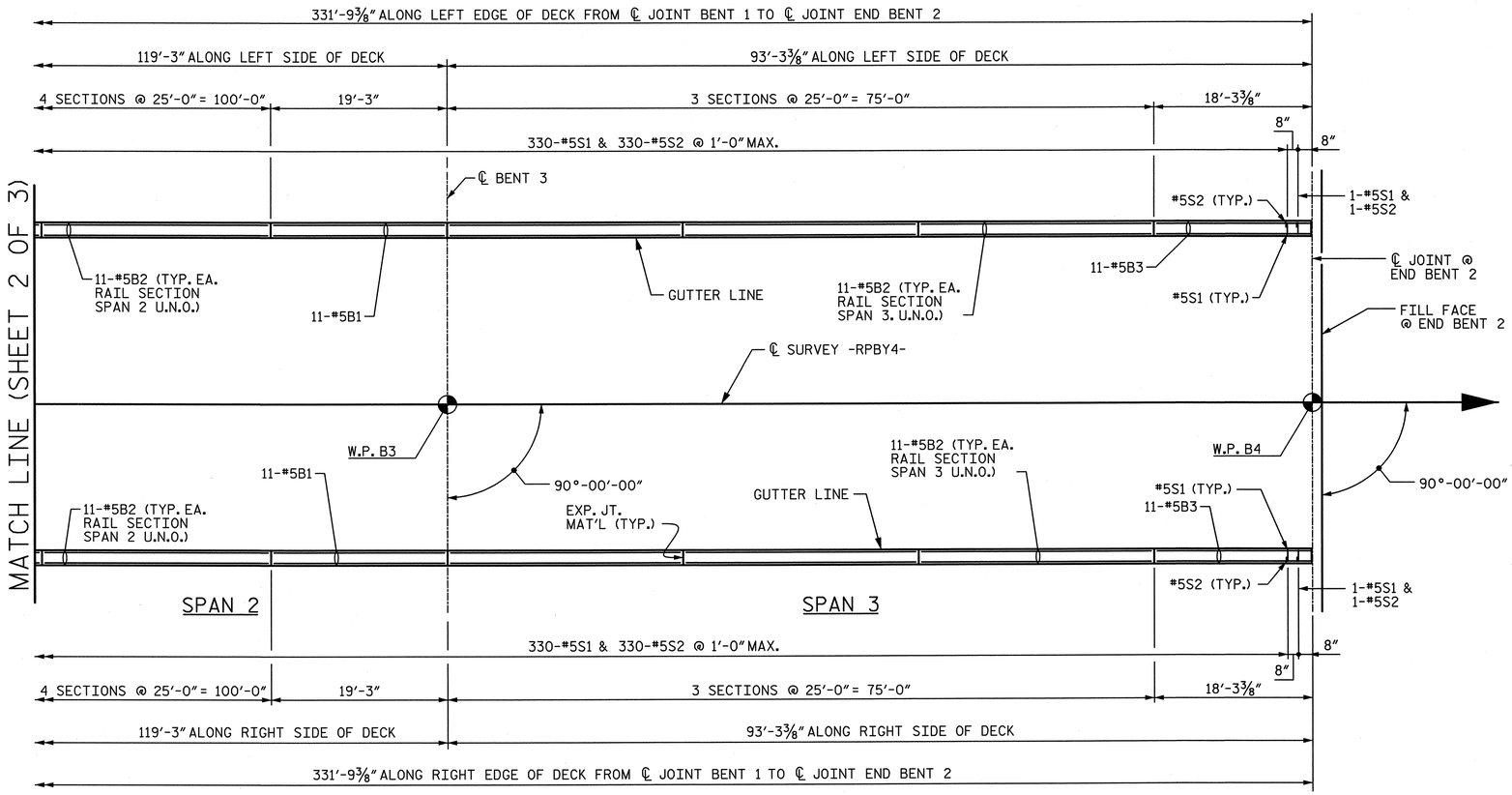

PLAN

PROJECT NO. U-2524C

GUILFORD COUNTY

STATION: POT 6+01.72 -RPBY4-

SHEET 3 OF 3

STATE OF NORTH CAROLINA
DEPARTMENT OF TRANSPORTATION
RALEIGH

PLAN OF RAILS
CONCRETE BARRIER RAIL

-RAMP B-

NORTH CAROLINA PROFESSIONAL SEAL 28479 ENGINEER KEVIN G. BAILEY
5-30-13

REVISIONS						SHEET NO.
NO.	BY:	DATE:	NO.	BY:	DATE:	S-611
1			3			TOTAL SHEETS
2			4			63

STV / Ralph Whitehead Associates, Inc.
1000 West Morehead St., Ste. 200
Charlotte, NC 28208
NC License No. F-0991

DRAWN BY : MM DATE : 10-12
CHECKED BY : YT DATE : 10-12

DESIGN ENGINEER OF RECORD: T. TOWNSEND DATE : 5-13

5/29/2013 10:02:24 AM R:\station\Finals\(26) Plan of Rails Sheet 3 of 3.dgn

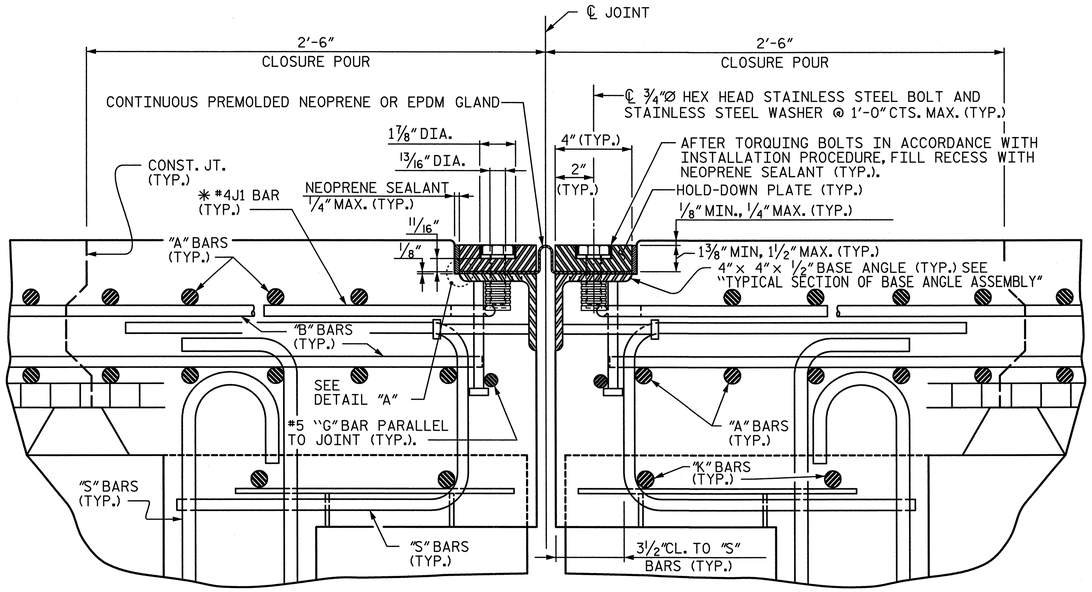

EXPANSION JOINT DETAILS - BENT 1

(SECTION NORMAL TO JOINT -- PRESTRESSED GIRDER SUPERSTRUCTURE)

* THE QUANTITY OF #4J1 BARS ON THE BILL OF MATERIAL IS BASED ON 1'-0" CENTERS. J1 BARS SHALL BE PLACED AT EACH VERTICAL STUD ANCHOR BOLT. IN THE EVENT THAT THE NUMBER OF VERTICAL STUD ANCHORS EXCEEDS THE NUMBER OF J1 BARS SPECIFIED, ADDITIONAL J1 BARS WILL NOT BE REQUIRED.

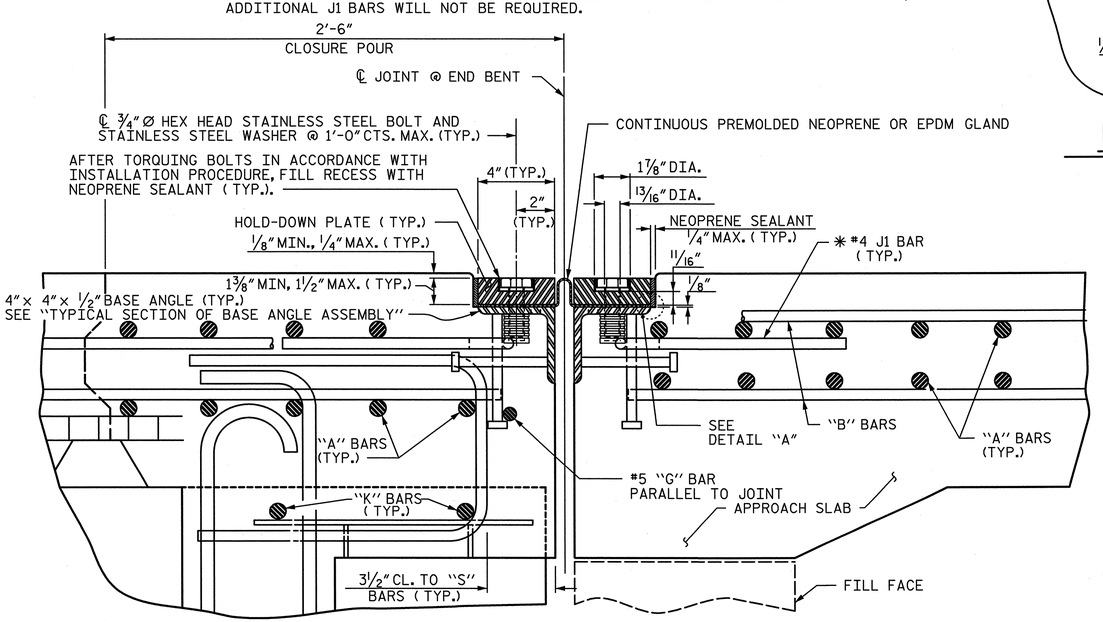

EXPANSION JOINT DETAILS - END BENT 2

SECTION NORMAL TO JOINT -- PRESTRESSED GIRDER SUPERSTRUCTURE

* THE QUANTITY OF #4 J1 BARS ON THE BILL OF MATERIAL IS BASED ON 1'-0" CENTERS. J1 BARS SHALL BE PLACED AT EACH VERTICAL STUD ANCHOR BOLT. IN THE EVENT THAT THE NUMBER OF VERTICAL STUD ANCHORS EXCEEDS THE NUMBER OF J1 BARS SPECIFIED, ADDITIONAL J1 BARS WILL NOT BE REQUIRED.

DRAWN BY : TJT	DATE : 5-13
CHECKED BY : KGB	DATE : 5-13
DESIGN ENGINEER OF RECORD: T. TOWNSEND	DATE : 5-13

INSTALLATION PROCEDURE

1. A TEMPLATE OR OTHER SUITABLE DEVICE SHALL BE USED TO FORM THE TOP OF THE EXPANSION JOINT SEAL BLOCKOUT TO THE PROPER DEPTH AND WIDTH. THE TEMPLATE SHALL BE 4⅛" TO 4¼" WIDE AND OF SUCH THICKNESS AS TO PROVIDE FOR CORRECT FINAL ELEVATION OF TOP OF HOLD-DOWN PLATES. THE TEMPLATE SHALL BE ATTACHED TO THE BASE ANGLE ASSEMBLY WITH THE ¾" Ø HEX HEAD BOLTS PROVIDED FOR THE HOLD-DOWN PLATES. A 1" Ø HOLE SHALL BE PROVIDED IN THE TEMPLATE CENTERED OVER EACH WEEP HOLE IN THE 4" X 4" X ½" BASE ANGLE. OTHER METHODS OF INSURING DRAINAGE THROUGH WEEP HOLES MAY BE EMPLOYED SUBJECT TO ENGINEER'S APPROVAL.
2. AFTER THE CONCRETE HAS BEEN CAST ON BOTH SIDES OF THE JOINT, REMOVE THE TEMPLATE. THOROUGHLY CLEAN THE BOLT HOLES AND THE ANGLE PLATE. REMOVE ANY EXCESS CONCRETE THAT COMES OUT OF THE WEEP HOLES. ANY DAMAGED STEEL SHALL BE COATED WITH A MINIMUM THICKNESS OF 4 DRY MILS OF ZINC-RICH PAINT IN ACCORDANCE WITH THE STANDARD SPECIFICATIONS.
3. LAY THE GLAND ON THE BASE ANGLE AND FIELD MARK THE GLAND FOR THE BOLT HOLES. HOLES IN THE GLAND SHALL BE PUNCHED ⅞" IN DIAMETER WITH A HAND PUNCH.
4. IN ORDER TO CHECK FOR PROPER ALIGNMENT, PLACE THE GLAND AND HOLD-DOWN PLATES ON THE BASE ANGLE. DO NOT APPLY NEOPRENE SEALANT. BOLT THE HOLD-DOWN PLATES TO THE BASE ANGLE BUT DO NOT TIGHTEN. THE ENGINEER SHALL INSPECT THE JOINT SEAL DEVICE FOR PROPER ALIGNMENT.
5. AFTER INSPECTION, REMOVE THE HOLD-DOWN PLATES AND GLAND. APPLY NEOPRENE SEALANT TO THE BASE ANGLE IN ACCORDANCE WITH THE "INSTALLATION SKETCH". PLACE GLAND AND HOLD-DOWN PLATES ON THE BASE ANGLE. BOLT THE HOLD-DOWN PLATES TO THE BASE ANGLE ASSEMBLY AND TORQUE THE BOLTS TO 88 FT-LBS WITH A TORQUE WRENCH. CHECK THE TORQUE AFTER THREE (3) HOURS AND, IF NECESSARY, RETIGHTEN TO 88 FT-LBS. A FINAL CHECK SHALL BE MADE AT SEVEN (7) DAYS. TORQUE SHALL NOT BE LESS THAN 80 FT-LBS AFTER SEVEN (7) DAYS.
6. AFTER PROPER TORQUING, CLEAN THE BOLT HOLE RECESSES AND THE RECESS BETWEEN THE JOINT SEAL DEVICE AND CONCRETE, COMPLETELY FILL THESE RECESSES WITH NEOPRENE SEALANT.

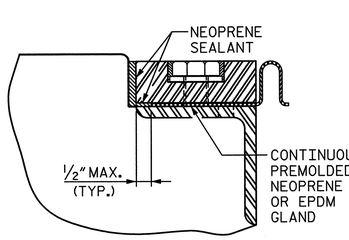

DETAIL "A"

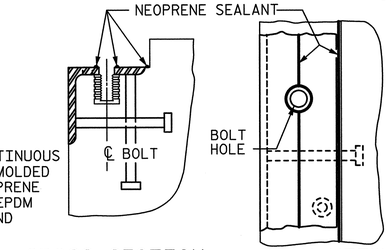

CROSS SECTION PLAN VIEW

INSTALLATION SKETCH

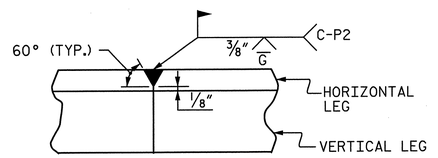

DETAIL- FIELD WELD SPLICE OF BASE ANGLE

NOTES:

1. FOR EXPANSION JOINT SEALS, SEE SPECIAL PROVISIONS.
2. ALL PLATES AND ANGLES SHALL CONFORM TO AASHTO M270 GRADE 36 STEEL OR APPROVED EQUAL. ALL HOLD-DOWN BOLTS SHALL CONFORM TO ASTM F593 ALLOY 304 STAINLESS STEEL AND WASHERS SHALL CONFORM TO ASTM F844 EXCEPT THEY SHALL BE MADE FROM ALLOY 304 STAINLESS STEEL. ALL STUD ANCHORS SHALL CONFORM TO AASHTO M169, GRADES 1010 THRU 1020 OR APPROVED EQUAL. ALL CONCRETE INSERTS SHALL BE CLOSED END AND SHALL CONFORM TO AASHTO M169, GRADE 12L14. TENSILE CAPACITY SHALL BE 3000 LBS. MIN.
3. A PREMOLDED CORRUGATED OR NON-CORRUGATED GLAND SHALL BE USED FOR JOINTS SKEWED BETWEEN 50° THRU 130°. FOR JOINTS SKEWED LESS THAN 50° OR MORE THAN 130°, ONLY A CORRUGATED GLAND SHALL BE USED.
4. CLOSED END FERRULES AND STUD ANCHORS SHALL BE SHOP WELDED AND ALL HOLES SHALL BE SHOP DRILLED AS SHOWN ON PLANS. STUD ANCHORS SHALL BE ELECTRIC ARC END WELDED WITH COMPLETE FUSION.
5. SURFACES COMING IN CONTACT WITH NEOPRENE SHALL BE GROUND SMOOTH PRIOR TO METALLIZING.
6. UPON COMPLETION OF SHOP FABRICATION, THE HOLD DOWN PLATE AND BASE ANGLE ASSEMBLY, AS SHOWN IN THE " TYPICAL SECTION OF BASE ANGLE ASSEMBLY", SHALL BE METALLIZED. SEE SPECIAL PROVISION FOR THERMAL SPRAYED COATINGS (METALLIZATION).
7. BASE ANGLE ASSEMBLY SHALL BE CONTINUOUS FOR THE LENGTH OF THE JOINT. AT CROWN BREAKS, THE ENDS OF THE BASE ANGLE ASSEMBLY SHALL BE CUT PARALLEL TO THE BRIDGE CENTERLINE FOR SKEWS LESS THAN 80° AND GREATER THAN 100°. FINISHED WELD SHALL BE GROUND SMOOTH AND COATED WITH A MINIMUM THICKNESS OF 4 DRY MILS OF ZINC-RICH PAINT IN ACCORDANCE WITH THE STANDARD SPECIFICATIONS.
8. FIELD SPLICES OF HOLD-DOWN PLATES SHALL BE KEPT TO A MINIMUM. CONTRACTOR SHALL FURNISH DETAILED PLANS SHOWING PROPOSED SPLICE LOCATIONS FOR APPROVAL. HOLD-DOWN PLATES SHALL NOT EXCEED 20' LENGTHS UNLESS APPROVED BY THE ENGINEER.
9. NO ALTERNATE JOINT DETAILS SHALL BE PERMITTED IN LIEU OF THOSE SHOWN ON THESE PLANS.
10. THE CONTRACTOR MAY, AT HIS OPTION, USE ADHESIVELY ANCHORED ANCHOR BOLTS IN PLACE OF CONCRETE INSERTS FOR COVER PLATES. THE YIELD LOAD OF THE ¾" Ø BOLT IS 10 KIPS. FIELD TESTING OF THE ADHESIVE BONDING SYSTEM IS NOT REQUIRED.

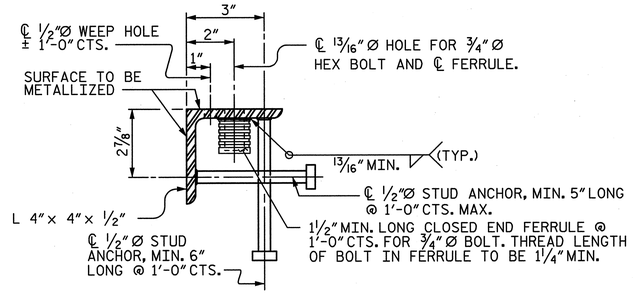

TYPICAL SECTION OF BASE ANGLE ASSEMBLY

NORTH CAROLINA PROFESSIONAL ENGINEER SEAL 28479 KEVIN G. BAILEY 5-30-13

MOVEMENT AND SETTING AT JOINT

BENT NO.	SKEW ANGLE	TOTAL MOVEMENT (ALONG ℄ RDWY.)	PERPENDICULAR JOINT OPENING AT 45°F	PERPENDICULAR JOINT OPENING AT 60°F	PERPENDICULAR JOINT OPENING AT 90°F
B1	●90°-00'-00"	1⅛"	1¼"	1 3/16"	1 3/16"
EB2	90°-00'-00"	1"	1 11/16"	1½"	1 3/16"

● ANGLE TO EXTENDED TANGENT

PROJECT NO. U-2524C

GUILFORD COUNTY

STATION: POT 6+01.72 -RPBY4-

SHEET 1 OF 3

STATE OF NORTH CAROLINA
DEPARTMENT OF TRANSPORTATION
RALEIGH

EXPANSION JOINT SEAL DETAILS

-RAMP B-

REVISIONS						SHEET NO.
NO.	BY:	DATE:	NO.	BY:	DATE:	S-612
1			3			TOTAL SHEETS
2			4			836

STV / Ralph Whitehead Associates, Inc.
1000 West Morehead St., Ste. 200
Charlotte, NC 28208
NC License No. F-0991

5/29/2013 10:02:29 AM R:\ustation\Finals\127 Expansion Joint Details 1of 2.dgn

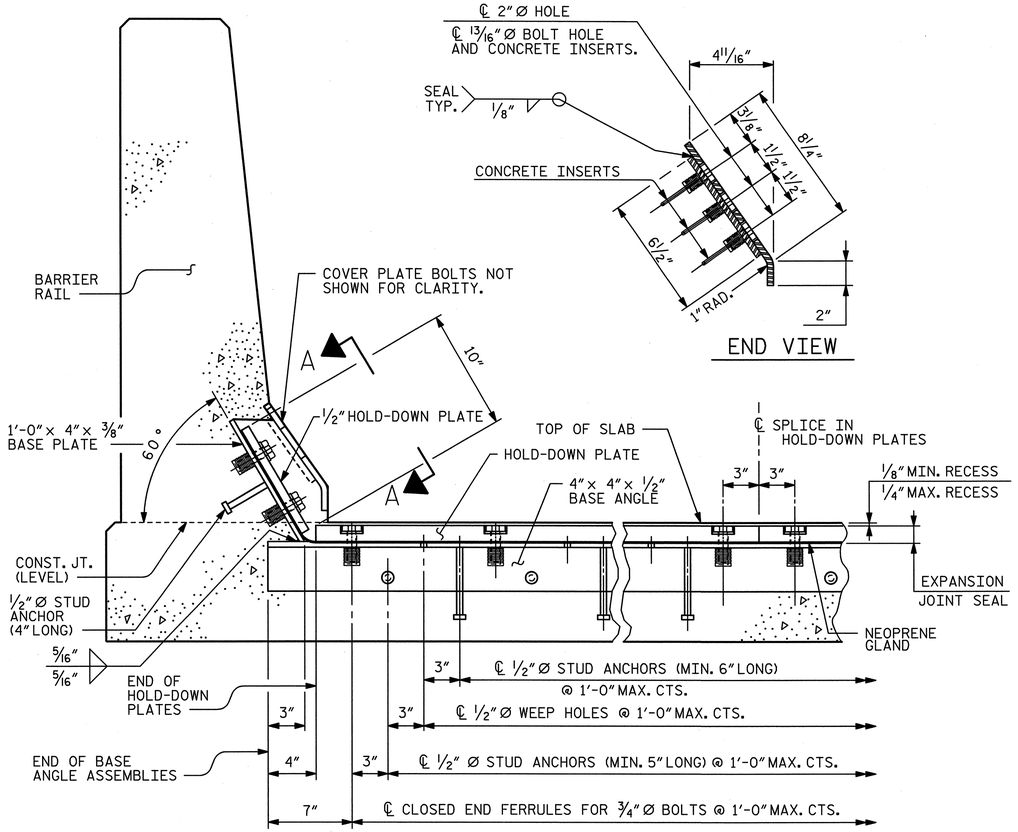

SECTION THRU RAIL NORMAL TO JOINT

NOTES:

1. FOR PAVEMENT MARKING ALIGNMENT, SEE SHEET 3 OF 3.

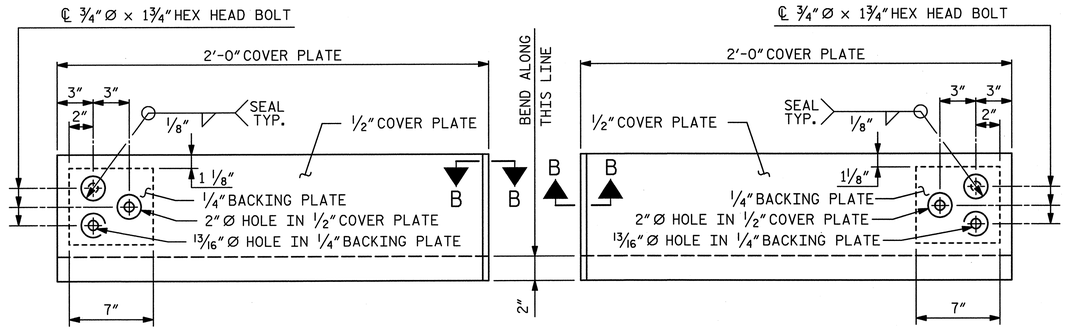

TYPE I - ELEVATION VIEW

TYPE II - ELEVATION VIEW

COVER PLATE DETAILS

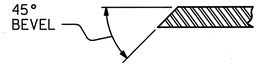

SECTION B - B

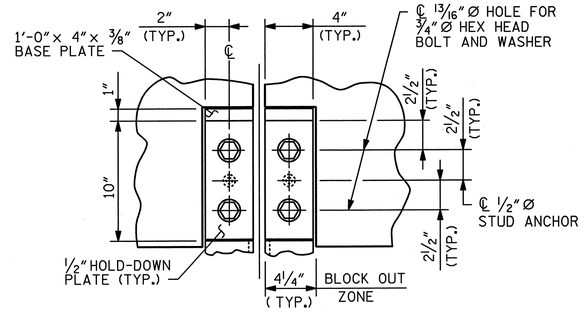

SECTION A - A

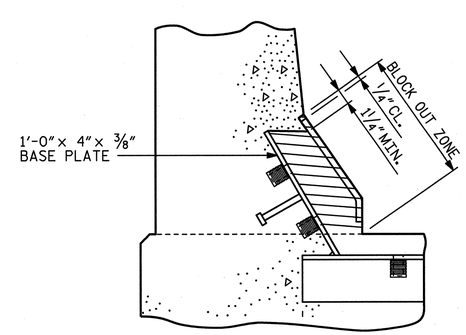

BLOCK OUT DETAIL

SEE "SECTION A-A" FOR OTHER DETAILS.

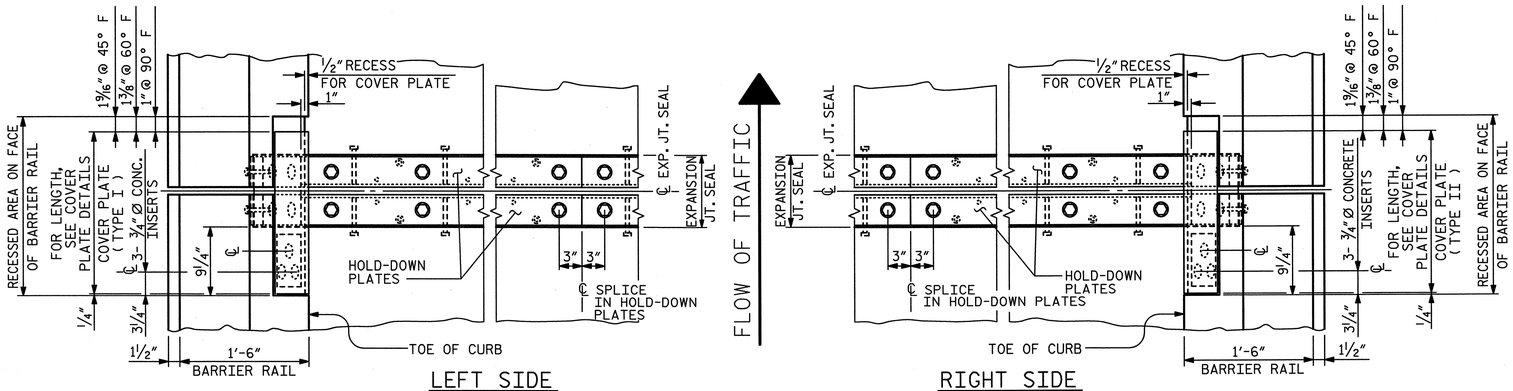

LEFT SIDE

RIGHT SIDE

PLAN OF EXPANSION JOINT SEAL

(FOR BENT 1 AND END BENT 2)

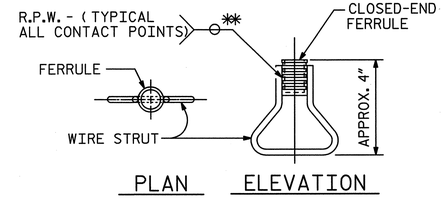

PLAN ELEVATION

CONCRETE INSERT

✱ EACH WELDED ATTACHMENT OF WIRE TO FERRULE SHALL DEVELOP THE TENSILE STRENGTH OF THE WIRE.

PROJECT NO. U-2524C

GUILFORD COUNTY

STATION: POT 6+01.72 -RPBY4-

SHEET 2 OF 3

STATE OF NORTH CAROLINA
DEPARTMENT OF TRANSPORTATION
RALEIGH

EXPANSION JOINT SEAL DETAILS FOR BARRIER RAIL

-RAMP B-

NORTH CAROLINA PROFESSIONAL SEAL 28479 ENGINEER KEVIN G. BAILEY 5-30-13

DRAWN BY : TJT	DATE : 5-13	DESIGN ENGINEER OF RECORD: T. TOWNSEND	DATE : 5-13
CHECKED BY : KGB	DATE : 5-13		

STV / Ralph Whitehead Associates, Inc.
1000 West Morehead St., Ste. 200
Charlotte, NC 28208
NC License No. F-0991

REVISIONS						SHEET NO.
NO.	BY:	DATE:	NO.	BY:	DATE:	S-613
1			3			TOTAL SHEETS
2			4			83

5/29/2013 10:02:31 AM R:\ustation\Finals\28) Expansion Joint Details 2 of 2.dgn

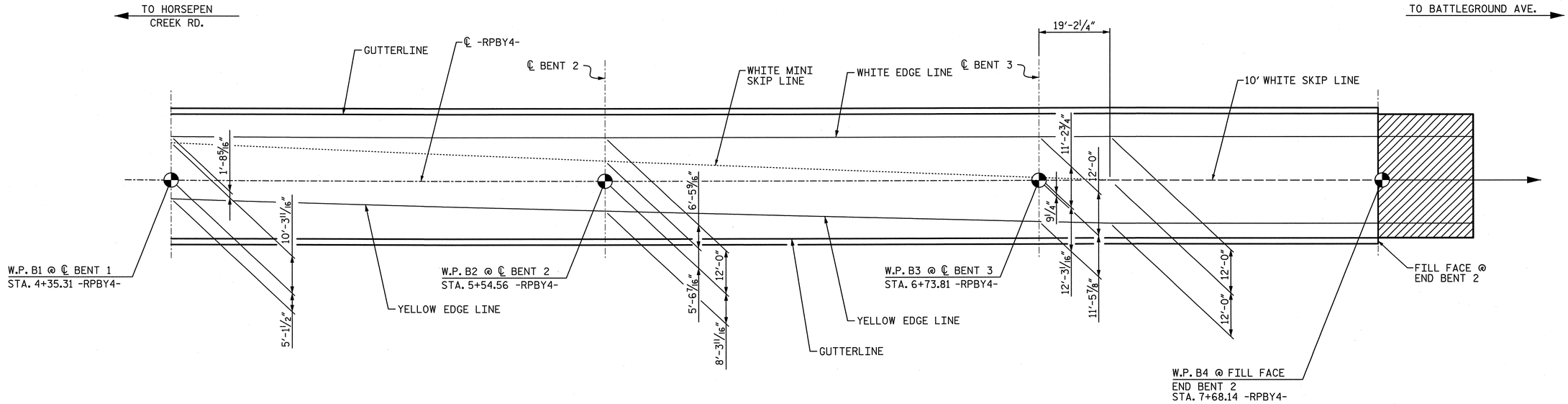

PAVEMENT MARKING ALIGNMENT

NOTES:

1. FOR ADDITONAL DETAILS & MATERIALS, SEE PAVEMENT MARKING PLANS.
2. FOR PAY ITEM FOR PAVEMENT MARKING, SEE ROADWAY PLANS.

PROJECT NO. U-2524C

GUILFORD COUNTY

STATION: POT 6+01.72 -RPBY4-

SHEET 3 OF 3

STATE OF NORTH CAROLINA
DEPARTMENT OF TRANSPORTATION
RALEIGH

PAVEMENT MARKING ALIGNMENT

-RAMP B-

NORTH CAROLINA PROFESSIONAL SEAL 28479 ENGINEER KEVIN G. BAILEY
5-30-13

REVISIONS						SHEET NO.
NO.	BY:	DATE:	NO.	BY:	DATE:	S-614
1			3			TOTAL SHEETS
2			4			830

STV / Ralph Whitehead Associates, Inc.
1000 West Morehead St., Ste. 200
Charlotte, NC 28208
NC License No. F-0991

DRAWN BY : MM DATE : 10-12
CHECKED BY : YT DATE : 10-12

DESIGN ENGINEER OF RECORD: K. BAILEY DATE : 5-13

5/29/2013 10:02:34 AM R:\station\Finals\(29) Pavement Marking Alignment.dgn

REINFORCING BAR SCHEDULE FOR RAMP B

BAR	NO.	SIZE	TYPE	LENGTH	WEIGHT
✳A1	529	5	STR.	37′-2″	20,507
A301	529	5	STR.	37′-2″	20,507
✳B1	54	5	STR.	47′-0″	2,647
✳B2	54	7	STR.	60′-0″	6,623
✳B3	54	5	STR.	33′-5″	1,882
✳B4	54	5	STR.	34′-0″	1,915
✳B10	48	7	STR.	50′-0″	4,906
✳B11	48	7	STR.	40′-0″	3,925
B101	64	5	STR.	51′-9″	3,454
B102	72	7	STR.	60′-0″	8,830
B103	32	5	STR.	43′-10″	1,463
B104	64	5	STR.	34′-4″	2,292
✳G1	2	5	STR.	37′-2″	78
✳J1	74	4	⑦	1′-5″	70
✳K1	8	8	②	23′-10″	509
✳K2	8	8	①	16′-0″	342
✳K3	12	6	STR.	5′-9″	104
K120	12	4	STR.	6′-0″	48
K121	60	4	STR.	8′-9″	351
K122	12	4	STR.	5′-8″	46
K123	14	4	STR.	29′-3″	274
✳S1	42	5	③	6′-0″	263
✳S2	42	4	⑥	2′-6″	70
S3	300	4	⑤	2′-9″	551
U1	42	4	④	16′-6″	463
U2	12	4	⑥	11′-6″	92

SUPERSTRUCTURE REINFORCING STEEL LENGTHS ARE BASED ON THE FOLLOWING MINIMUM SPLICE LENGTHS

BAR SIZE	SUPERSTRUCTURE EXCEPT APPROACH SLABS, PARAPET, AND BARRIER RAIL		APPROACH SLABS		PARAPET AND BARRIER RAIL
	EPOXY COATED	UNCOATED	EPOXY COATED	UNCOATED	
#4	2′-0″	1′-9″	2′-0″	1′-9″	2′-9″
#5	2′-6″	2′-2″	2′-6″	2′-2″	3′-5″
#6	3′-0″	2′-7″	3′-10″	2′-7″	4′-4″
#7	5′-3″	3′-6″			
#8	6′-10″	4′-7″			

GROOVING BRIDGE FLOORS

APPROACH SLAB	745	SQ.FT.
BRIDGE DECK	10,325	SQ.FT.
TOTAL	11,070	SQ.FT.

NOTES:

1. NO CLOSURE POURS SHALL OCCUR UNTIL THE CONCRETE IN ADJACENT SPANS HAVE OBTAINED A STRENGTH OF 3,000 PSI.

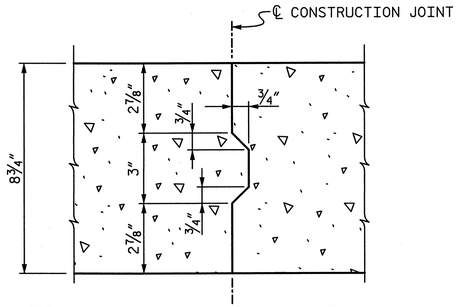

NOTE: REINFORCING STEEL IN SLAB NOT SHOWN. TRANSVERSE & LONGITUDINAL REINFORCING STEEL SHALL BE CONTINUOUS THROUGH JOINT.

CONSTRUCTION JOINT IN DECK SLAB

SUPERSTRUCTURE BILL OF MATERIAL

	CLASS AA CONCRETE	REINFORCING STEEL	EPOXY COATED REINFORCING STEEL
	(CU. YDS.)	(LBS.)	(LBS.)
POUR 1	114.4	-	-
POUR 2	143.8	-	-
POUR 3	149.9	-	-
POUR 4	32.4	-	-
POUR 5	32.4	-	-
POUR 6	4.6	-	-
POUR 7	4.6	-	-
TOTALS**	482.1	38,371	43,841

**QUANTITIES FOR BARRIER RAIL ARE NOT INCLUDED

BAR TYPES

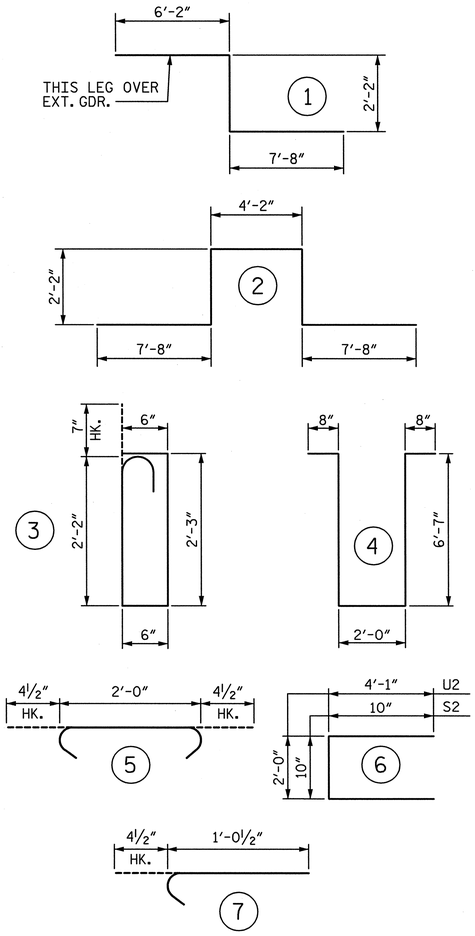

ALL BAR DIMENSIONS ARE OUT TO OUT

SPAN 1 SPAN 2 SPAN 3

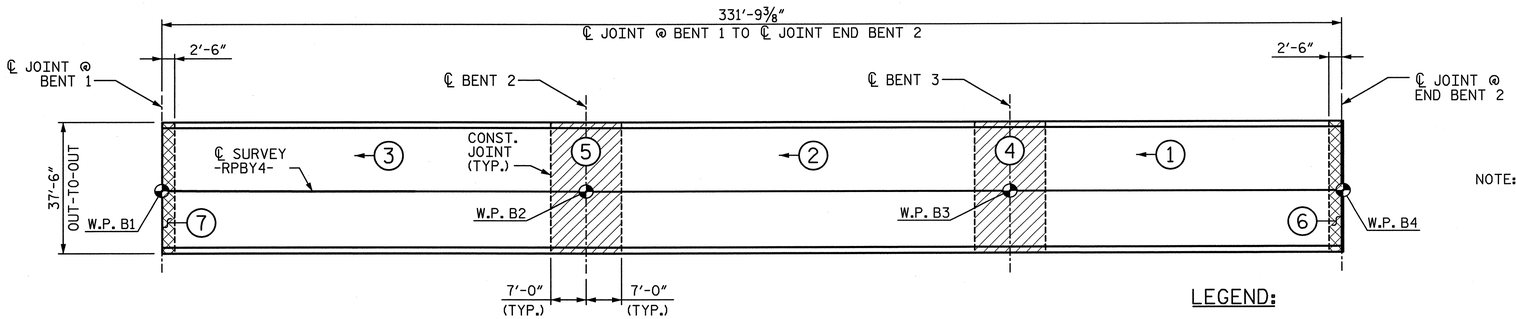

POUR SEQUENCE AND LAYOUT FOR COMPUTING AREA REINFORCED CONCRETE DECK SLAB (SQ. FT. = 12,441.8)

NOTE: AT THE CONTRACTOR'S OPTION, POUR 4 MAY BE POURED WITH POUR 2 AND POUR 5 MAY BE POURED WITH POUR 3.

LEGEND:

- DECK CLOSURE POUR AT CONTINUOUS BENTS
- DECK CLOSURE POUR AT EXPANSION JOINT SEALS
- (1) POUR NUMBER
- DIRECTION OF POUR

PROJECT NO. U-2524C

GUILFORD COUNTY

STATION: POT 6+01.72 -RPBY4-

STATE OF NORTH CAROLINA
DEPARTMENT OF TRANSPORTATION
RALEIGH

SUPERSTRUCTURE BILL OF MATERIAL

-RAMP B-

NORTH CAROLINA PROFESSIONAL ENGINEER SEAL 28479 KEVIN G. BAILEY 5-30-13

DRAWN BY : MM	DATE : 10-12	DESIGN ENGINEER OF RECORD: K. BAILEY	DATE : 5-13
CHECKED BY : YT	DATE : 10-12		

STV / Ralph Whitehead Associates, Inc.
1000 West Morehead St., Ste. 200
Charlotte, NC 28208
NC License No. F-0991

REVISIONS						SHEET NO.
NO.	BY:	DATE:	NO.	BY:	DATE:	S-615
1			3			TOTAL SHEETS
2			4			85

5/30/2013 9:43:23 AM R:\ustation\Finals\(30) Superstructure BOM.dgn

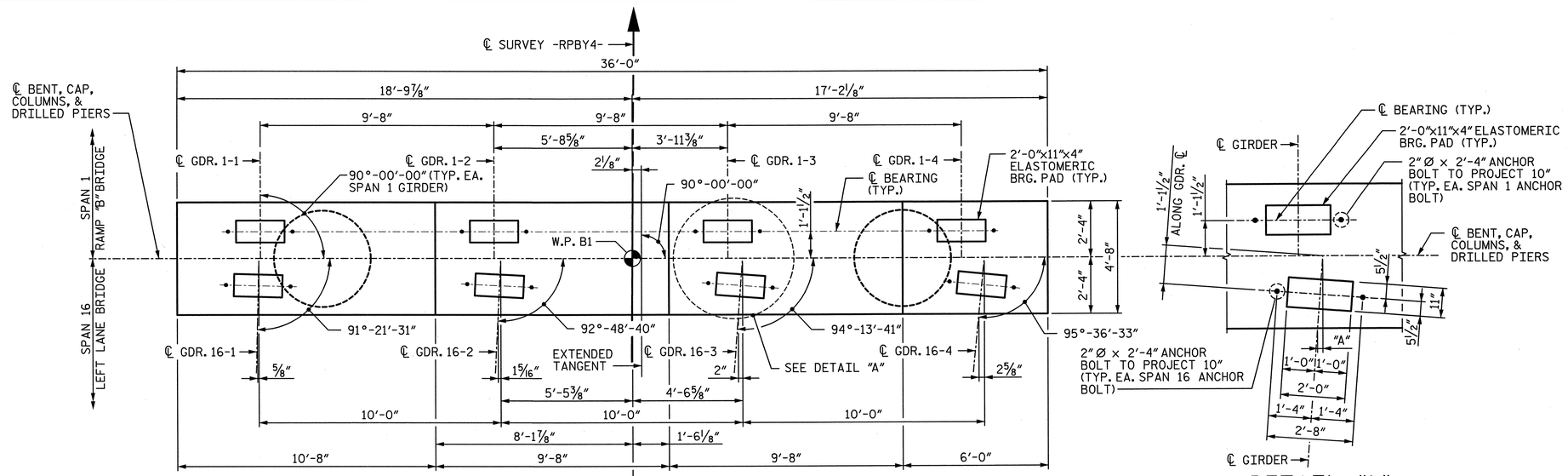

PLAN

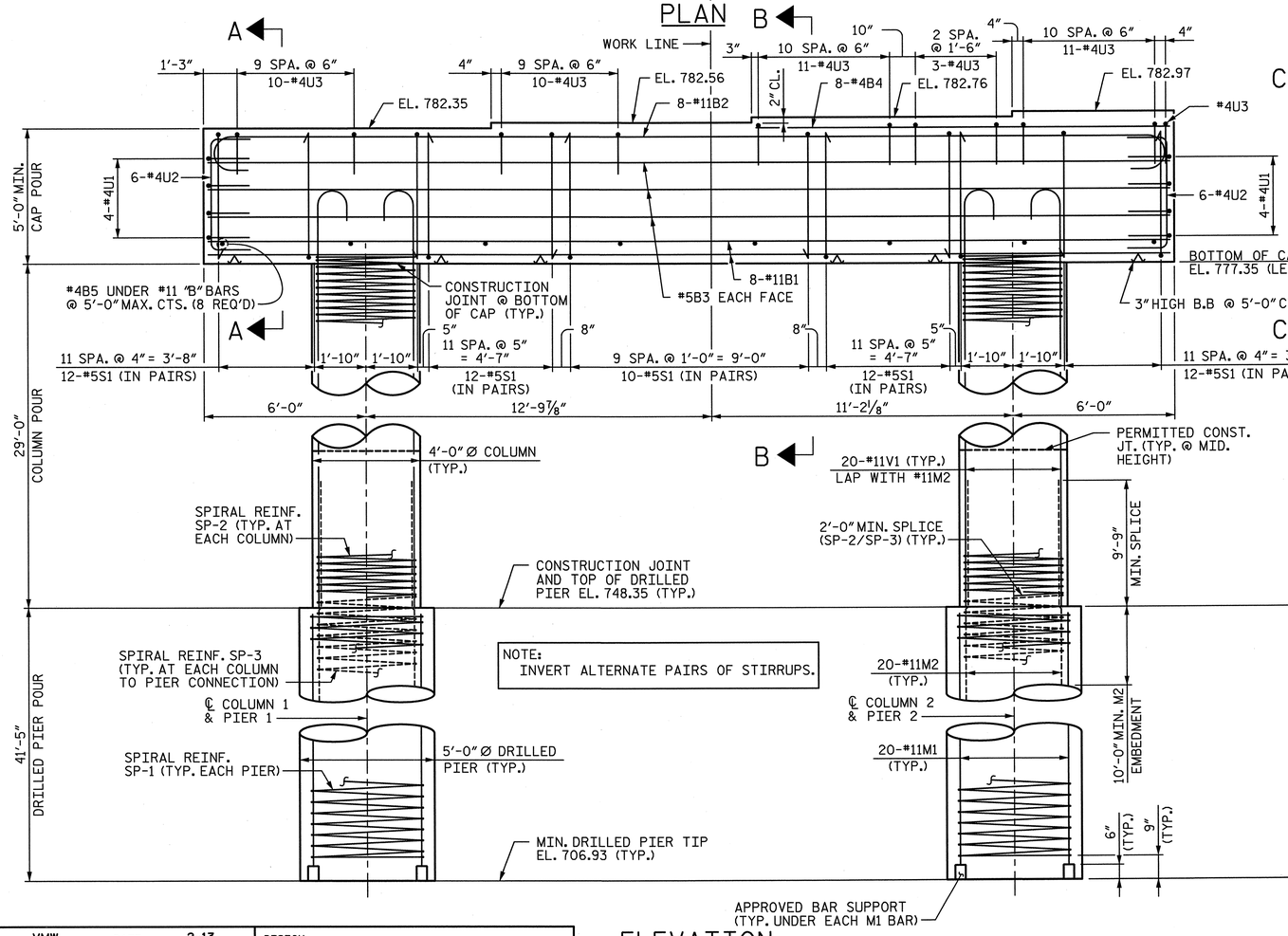

ELEVATION

DETAIL "A"

(TYP AT EACH BRIDGE SEAT)

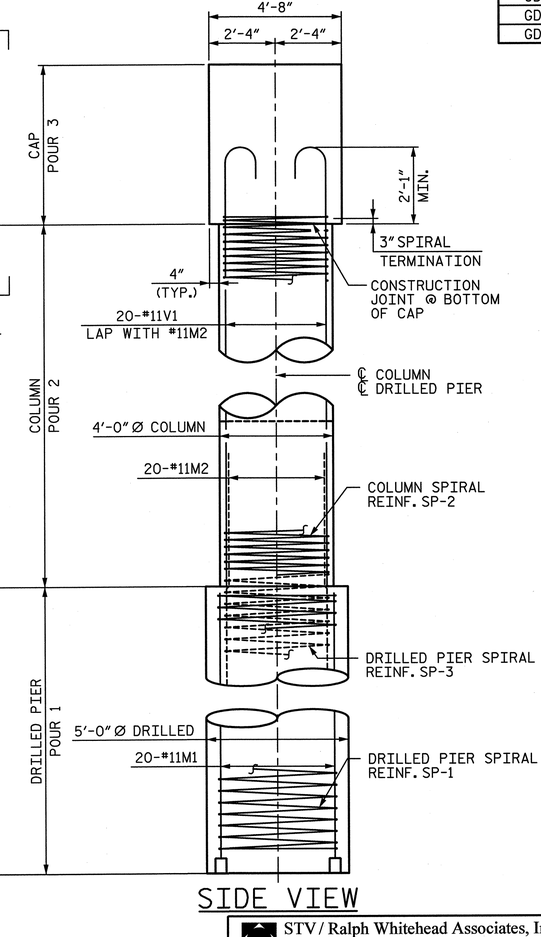

SIDE VIEW

NOTES:

1. ALL REINFORCING STEEL IN THE DRILLED PIERS IS INCLUDED IN THE PAY ITEMS FOR "REINFORCING STEEL" AND "SPIRAL COLUMN REINFORCING STEEL".
2. THE LOCATION OF THE CONSTRUCTION JOINT IN THE DRILLED PIERS IS BASED ON AN APPROXIMATE GROUND LINE ELEVATION. IF THE CONSTRUCTION JOINT IS ABOVE THE ACTUAL GROUND ELEVATION, THE CONTRACTOR SHALL PLACE THE CONSTRUCTION JOINT 1 FOOT BELOW THE GROUND LINE.
3. STIRRUPS AND "U BARS" IN CAP MAY BE SHIFTED SLIGHTLY AS NECESSARY TO CLEAR ANCHOR BOLTS.
4. HOOKS ON "V" BARS MAY BE TURNED AS NECESSARY FOR PLACING REINFORCING STEEL.
5. A CONSTRUCTION JOINT AT MID-HEIGHT OF COLUMN IS PERMITTED.
6. FOR 2"Ø ANCHOR BOLTS, SEE "ELASTOMERIC BEARING DETAILS" SHEET.
7. SEE GENERAL DRAWING SHEET 5 OF 5 FOR ADDITIONAL NOTES.
8. SEE SHEET 2 OF 3 FOR SECTIONS ON ELEVATION VIEW.
9. THE TOP SURFACE AREAS OF THE BENT CAPS SHALL BE CURED IN ACCORDANCE WITH THE STANDARD SPECIFICATIONS EXCEPT THE MEMBRANE CURING COMPOUND METHOD SHALL NOT BE USED.

DIMENSIONS	"A"
GDR. 16-1	⅝"
GDR. 16-2	1⅝16"
GDR. 16-3	2"
GDR. 16-4	2⅝"

NORTH CAROLINA PROFESSIONAL ENGINEER SEAL 28479 KEVIN G. BAILEY 5-30-13

PROJECT NO. U-2524C

GUILFORD COUNTY

STATION: POT 6+01.72 -RPBY4-

SHEET 1 OF 3

STATE OF NORTH CAROLINA
DEPARTMENT OF TRANSPORTATION
RALEIGH

SUBSTRUCTURE BENT 1 PLAN & ELEVATION

-RAMP B-

DRAWN BY : VMW	DATE : 2-13	DESIGN ENGINEER OF RECORD: T. TOWNSEND	DATE : 5-13
CHECKED BY : PEK	DATE : 3-13		

STV/ Ralph Whitehead Associates, Inc.
1000 West Morehead St., Ste. 200
Charlotte, NC 28208
NC License No. F-0991

REVISIONS						SHEET NO.
NO.	BY:	DATE:	NO.	BY:	DATE:	S-616
1			3			TOTAL SHEETS
2			4			836

5/29/2013 10:02:38 AM R:\ustation\Finals\(3) Bents 1- Sheet 1 of 3.dgn

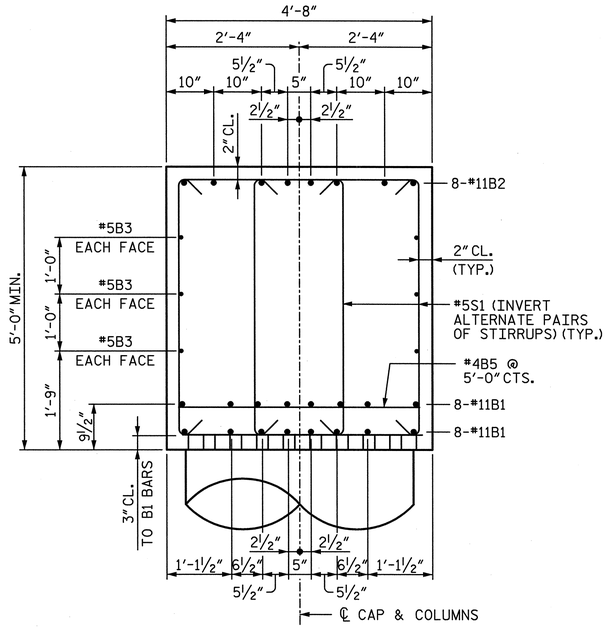

SECTION A-A

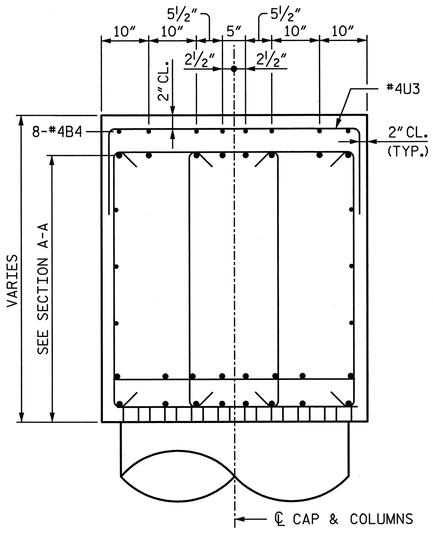

SECTION B-B

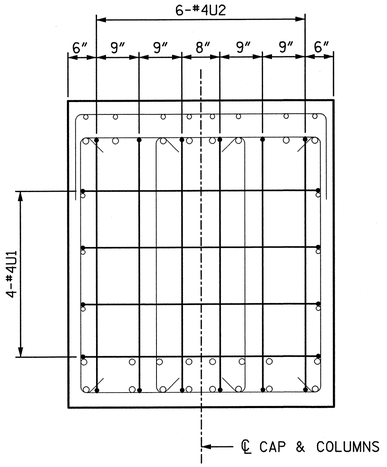

SECTION C-C

(RIGHT END SHOWN, LEFT END SIMILAR)

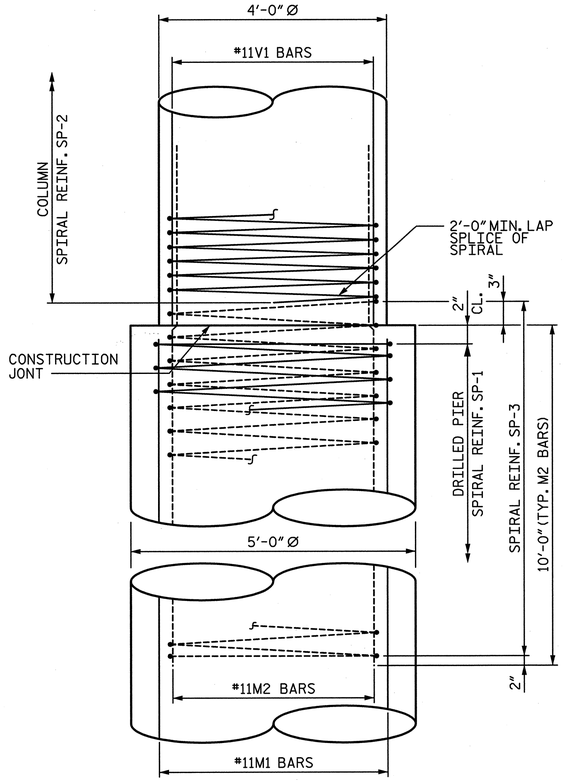

CONSTRUCTION JOINT DETAIL

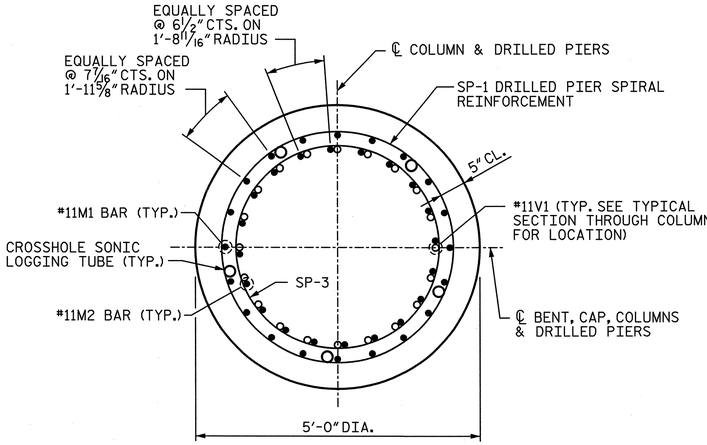

TYPICAL SECTION
THROUGH DRILLED PIER

(SHOWN AT COLUMN/DRILLED PIER INTERFACE)

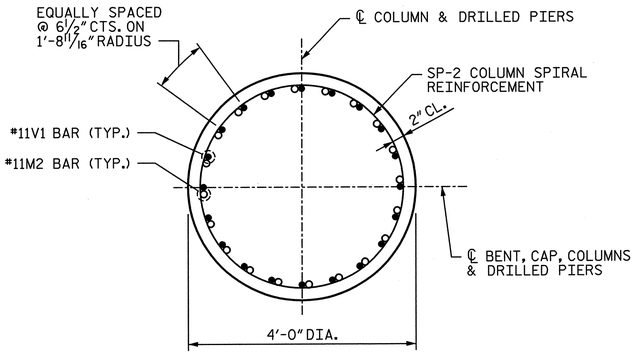

TYPICAL SECTION
THROUGH COLUMN

PROJECT NO. U-2524C

GUILFORD COUNTY

STATION: POT 6+01.72 -RPBY4-

SHEET 2 OF 3

STATE OF NORTH CAROLINA
DEPARTMENT OF TRANSPORTATION
RALEIGH

SUBSTRUCTURE BENT 1 DETAILS

-RAMP B-

NORTH CAROLINA PROFESSIONAL SEAL 28479 ENGINEER KEVIN G. BAILEY
5-30-13

REVISIONS						SHEET NO.
NO.	BY:	DATE:	NO.	BY:	DATE:	S-617
1			3			TOTAL SHEETS
2			4			836

STV / Ralph Whitehead Associates, Inc.
1000 West Morehead St., Ste. 200
Charlotte, NC 28208
NC License No. F-0991

DRAWN BY : VMW	DATE : 2-13	DESIGN ENGINEER OF RECORD: T. TOWNSEND	DATE : 5-13
CHECKED BY : PEK	DATE : 3-13		

5/29/2013 10:02:40 AM R:\ustation\Finals\(32) Bents I- Sheet 2 of 3.dgn

BAR TYPES

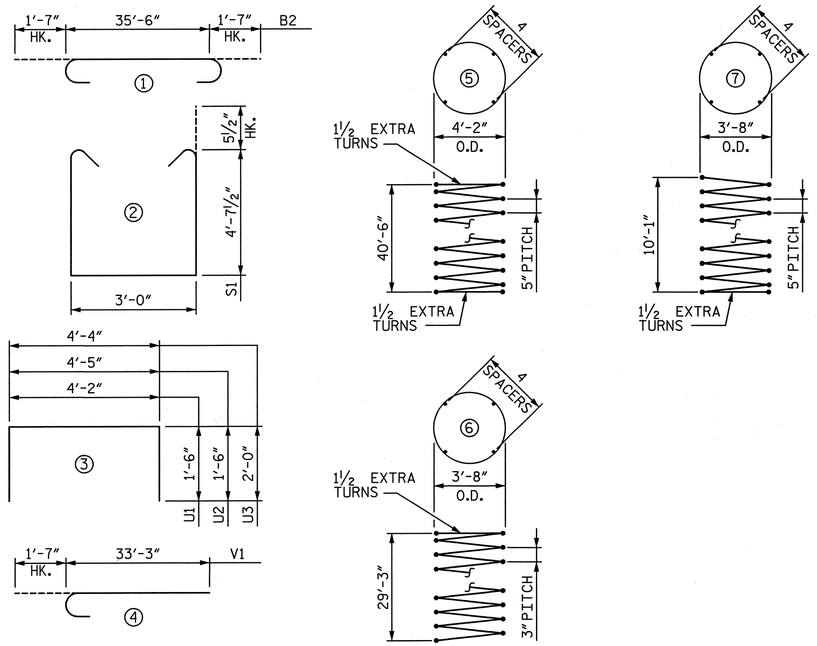

ALL BAR DIMENSIONS ARE OUT TO OUT

BILL OF MATERIAL

BAR	NO.	SIZE	TYPE	LENGTH	WEIGHT
B1	16	#11	STR.	35'-8"	3,032
B2	8	#11	①	38'-8"	1,643
B3	6	#5	STR.	35'-8"	223
B4	8	#4	STR.	15'-4"	82
B5	8	#4	STR.	4'-4"	23
M1	40	#11	STR.	40'-9"	8,660
M2	40	#11	STR.	19'-9"	4,197
S1	120	#5	②	13'-2"	1,648
U1	8	#4	③	7'-2"	38
U2	12	#4	③	7'-5"	59
U3	46	#4	③	8'-4"	256
V1	40	#11	④	34'-10"	7,403
SP-1	2	**	⑤	1293'-4"	2,698
SP-2	2	*	⑥	1355'-7"	1,811
SP-3	2	***	⑦	296'-4"	396

** THE SP-1 SPIRAL REINFORCING STEEL SHALL BE W31 OR D-31 COLD DRAWN WIRE OR #5 PLAIN OR DEFORMED BAR WITH A 5"PITCH.

* THE SP-2 SPIRAL REINFORCING SHALL BE W20 OR D-20 COLD DRAWN WIRE OR #4 PLAIN OR DEFORMED BAR WITH A 3"PITCH.

*** THE SP-3 SPIRAL REINFORCING SHALL BE W20 OR D-20 COLD DRAWN WIRE OR #4 PLAIN OR DEFORMED BAR WITH A 5"PITCH.

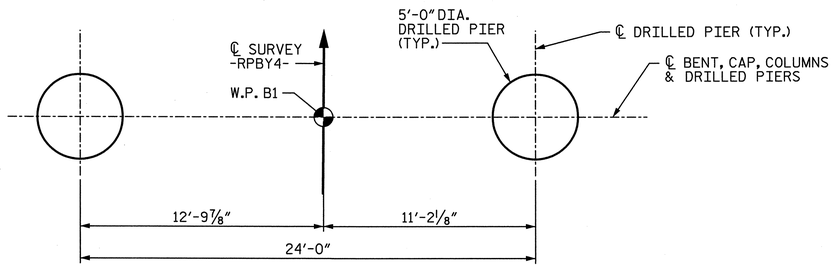

PLAN OF DRILLED PIERS

QUANTITIES

REINFORCING STEEL	LBS.	27,264
SPIRAL REINFORCING STEEL	LBS.	4,905
CLASS A CONCRETE : POUR 2 - COLUMNS	CU. YDS.	27.0
POUR 3 - CAP	CU. YDS.	32.8
TOTAL	CU. YDS.	59.8
5'-0" Ø DRILLED PIERS IN SOIL	L.F.	60.8
5'-0" Ø DRILLED PIERS NOT IN SOIL	L.F.	22.0
TOTAL 5'-0" Ø DRILLED PIERS	L.F.	82.8
DRILLED PIER CONCRETE : POUR 1	CU. YDS.	60.3
CSL TUBES	L.F.	429.2

PROJECT NO. U-2524C

GUILFORD COUNTY

STATION: POT 6+01.72 -RPBY4-

SHEET 3 OF 3

STATE OF NORTH CAROLINA
DEPARTMENT OF TRANSPORTATION
RALEIGH

SUBSTRUCTURE BENT 1 BILL OF MATERIAL

-RAMP B-

NORTH CAROLINA PROFESSIONAL SEAL 28479 ENGINEER KEVIN G. BAILEY
5-30-13

STV / Ralph Whitehead Associates, Inc.
1000 West Morehead St., Ste. 200
Charlotte, NC 28208
NC License No. F-0991

REVISIONS						SHEET NO.
NO.	BY:	DATE:	NO.	BY:	DATE:	S-618
1			3			TOTAL SHEETS
2			4			836

DRAWN BY : VMW DATE : 2-13
CHECKED BY : PEK DATE : 3-13

DESIGN ENGINEER OF RECORD: T. TOWNSEND DATE : 5-13

5/29/2013 10:02:42 AM R:\ustation\Finals\(33) Bents 1- Sheet 3 of 3.dgn

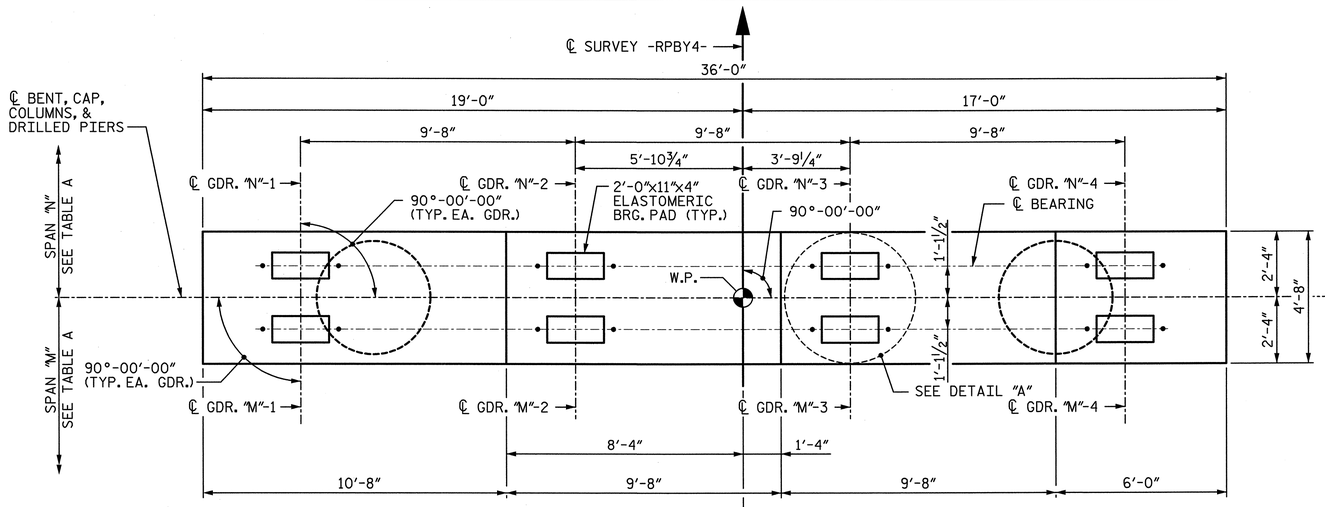

PLAN

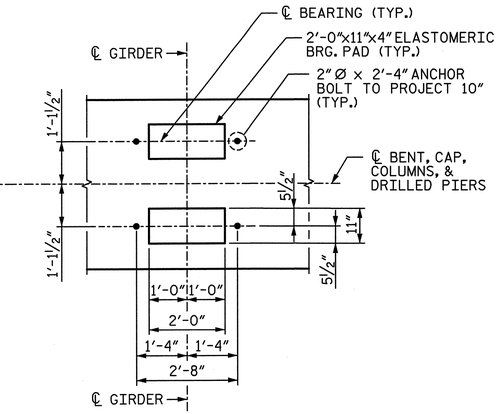

DETAIL "A"

(TYP AT EACH BRIDGE SEAT)

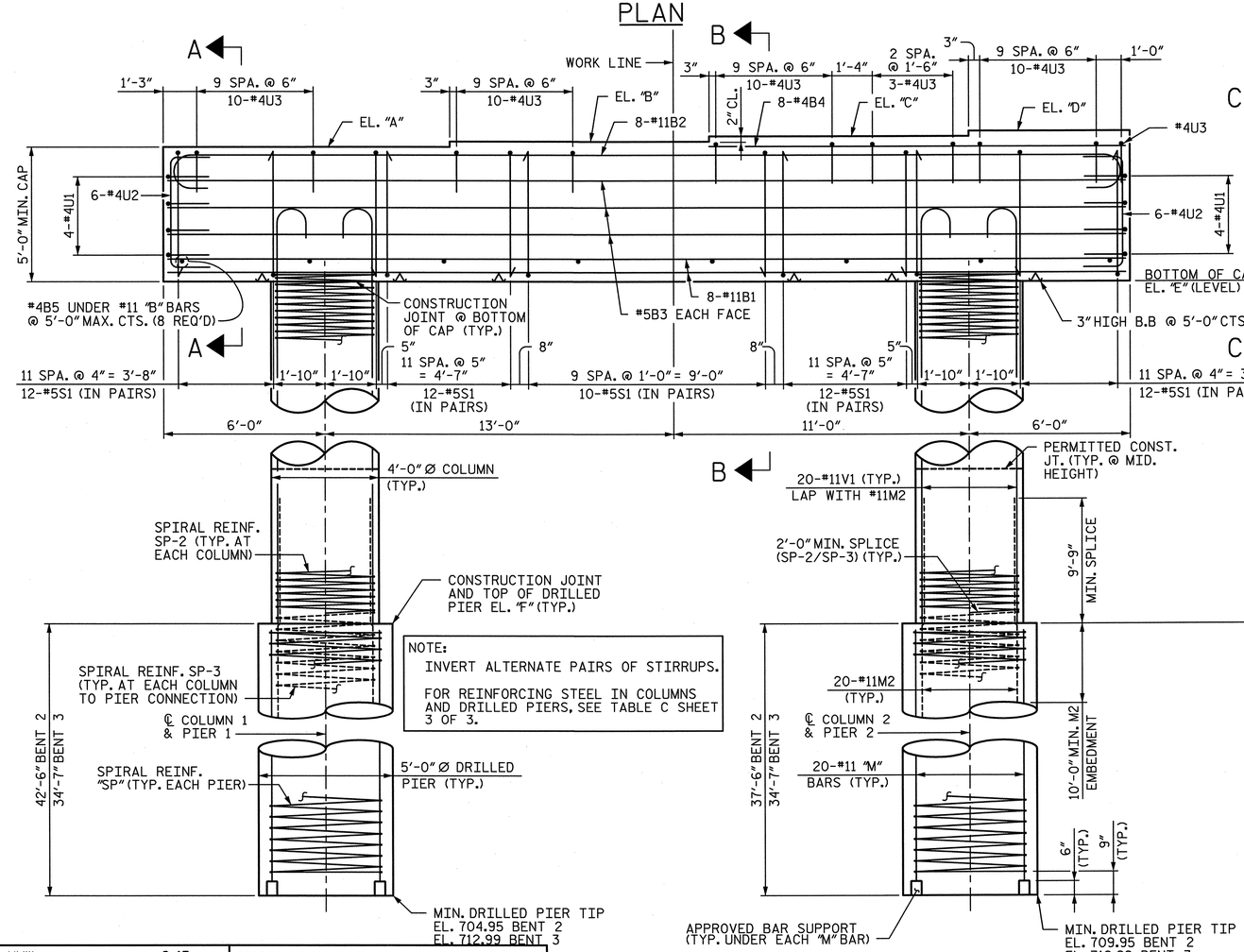

ELEVATION

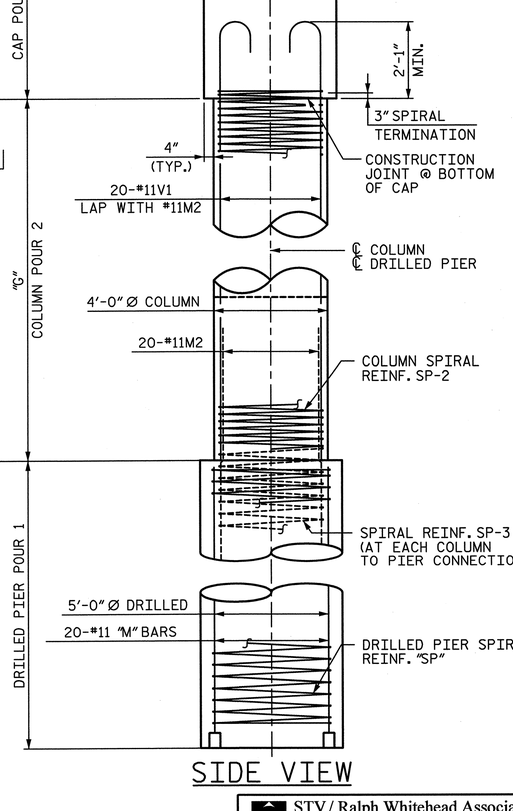

SIDE VIEW

NOTES:

1. ALL REINFORCING STEEL IN THE DRILLED PIERS IS INCLUDED IN THE PAY ITEMS FOR "REINFORCING STEEL" AND "SPIRAL COLUMN REINFORCING STEEL".
2. THE LOCATION OF THE CONSTRUCTION JOINT IN THE DRILLED PIERS IS BASED ON AN APPROXIMATE GROUND LINE ELEVATION. IF THE CONSTRUCTION JOINT IS ABOVE THE ACTUAL GROUND ELEVATION, THE CONTRACTOR SHALL PLACE THE CONSTRUCTION JOINT 1 FOOT BELOW THE GROUND LINE.
3. STIRRUPS AND "U BARS" IN CAP MAY BE SHIFTED SLIGHTLY AS NECESSARY TO CLEAR ANCHOR BOLTS.
4. HOOKS ON "V" BARS MAY BE TURNED AS NECESSARY FOR PLACING REINFORCING STEEL.
5. A CONSTRUCTION JOINT AT MID-HEIGHT OF COLUMN IS PERMITTED.
6. FOR 2" Ø ANCHOR BOLTS, SEE "ELASTOMERIC BEARING DETAILS" SHEET.
7. SEE GENERAL DRAWING SHEET 5 OF 5 FOR ADDITIONAL NOTES.
8. SEE SHEET 2 OF 3 FOR SECTIONS ON ELEVATION VIEW.

TABLE A PLAN VIEW INFORMATION		
	BENT 2	BENT 3
"M"	1	2
"N"	2	3

TABLE B ELEVATIONS & DIMENSIONS		
	BENT 2	BENT 3
"A"	779.45	775.57
"B"	779.64	775.77
"C"	779.84	775.96
"D"	780.03	776.15
"E"	774.45	770.57
"F"	747.45	747.57
"G"	27'-0"	23'-0"

NORTH CAROLINA PROFESSIONAL SEAL 28479 ENGINEER KEVIN G. BAILEY
5-30-13

PROJECT NO. U-2524C

GUILFORD COUNTY

STATION: POT 6+01.72 -RPBY4-

SHEET 1 OF 3

STATE OF NORTH CAROLINA
DEPARTMENT OF TRANSPORTATION
RALEIGH

SUBSTRUCTURE BENT 2 & 3 PLAN & ELEVATION

-RAMP B-

DRAWN BY : VMW	DATE : 2-13	DESIGN ENGINEER OF RECORD: T. TOWNSEND	DATE : 5-13
CHECKED BY : PEK	DATE : 3-13		

STV / Ralph Whitehead Associates, Inc.
1000 West Morehead St., Ste. 200
Charlotte, NC 28208
NC License No. F-0991

REVISIONS						SHEET NO.
NO.	BY:	DATE:	NO.	BY:	DATE:	S-619
1			3			TOTAL SHEETS
2			4			836

5/29/2013 10:02:44 AM R:\ustation\Finals\(34) Bents 2 & 3 - Sheet 1of 3.dgn

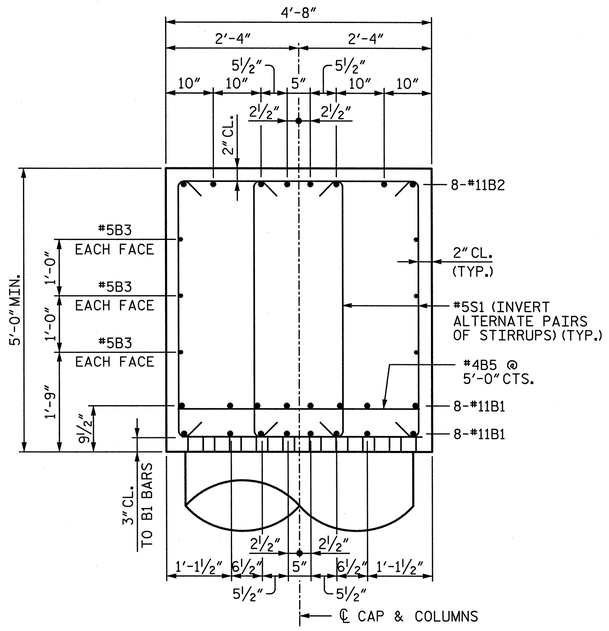

SECTION A-A

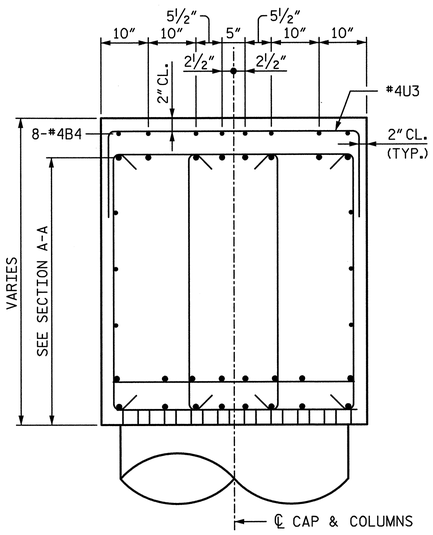

SECTION B-B

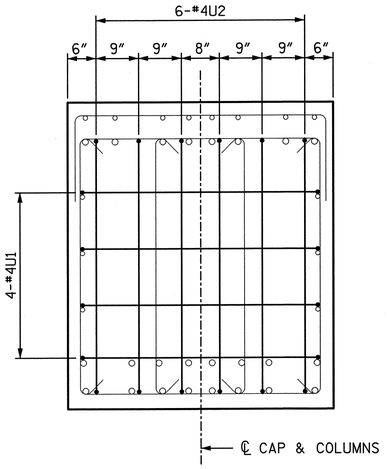

SECTION C-C

(RIGHT END SHOWN, LEFT END SIMILAR)

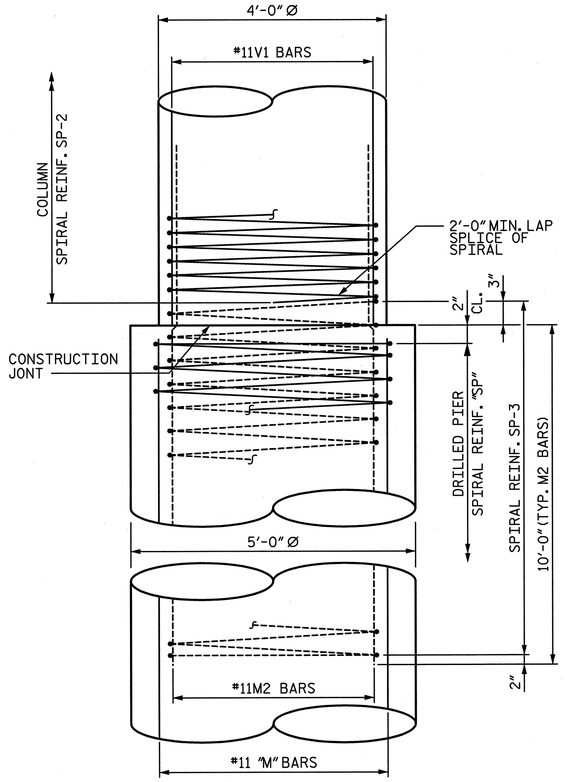

CONSTRUCTION JOINT DETAIL

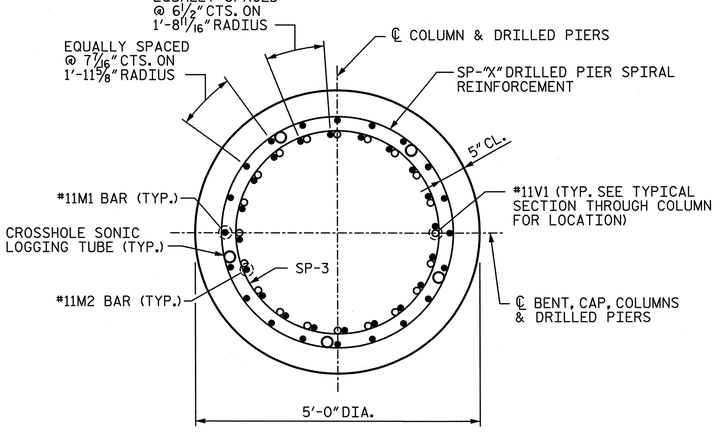

TYPICAL SECTION
THROUGH DRILLED PIER

(SHOWN AT COLUMN/DRILLED PIER INTERFACE)

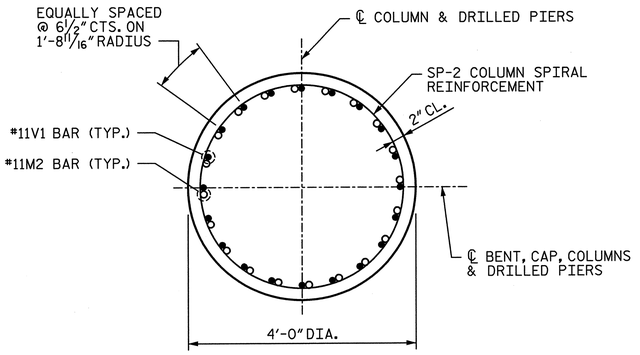

TYPICAL SECTION
THROUGH COLUMN

PROJECT NO. U-2524C

GUILFORD COUNTY

STATION: POT 6+01.72 -RPBY4-

SHEET 2 OF 3

STATE OF NORTH CAROLINA
DEPARTMENT OF TRANSPORTATION
RALEIGH

SUBSTRUCTURE BENT 2 & 3 DETAILS

-RAMP B-

NORTH CAROLINA PROFESSIONAL SEAL 28479 ENGINEER KEVIN G. BAILEY 5-30-13

STV / Ralph Whitehead Associates, Inc.
1000 West Morehead St., Ste. 200
Charlotte, NC 28208
NC License No. F-0991

REVISIONS						SHEET NO.
NO.	BY:	DATE:	NO.	BY:	DATE:	S-620
1			3			TOTAL SHEETS
2			4			836

DRAWN BY : VMW	DATE : 2-13	DESIGN ENGINEER OF RECORD: T. TOWNSEND	DATE : 5-13
CHECKED BY : PEK	DATE : 3-13		

5/29/2013 10:02:46 AM R:\ustation\Finals\(35) Bents 2 & 3 - Sheet 2 of 3.dgn

TABLE C

◆BENT 2 COLUMNS & DRILLED PIERS REINFORCING BILL OF MATERIAL

COLUMN/ DRILLED PIER	BAR	NO.	SIZE	TYPE	●	LENGTH	WEIGHT	DRILLED PIER LENGTH
1	M11	20	#11	STR.		44′-10″	4,764	42′-6″
	M2	20	#11	STR.		19′-9″	2,099	
	V1	20	#11	④	31′-3″	32′-10″	3,489	
	SP-11	1	✻✻	⑤	41′-7″	1,332′-2″	1,389	
	SP-2	1	✻	⑥	27′-3″	1,264′-5″	845	
	SP-3	1	✻✻✻	⑦	10′-1″	296′-4″	198	
2	M12	20	#11	STR.		39′-10″	4,233	37′-6″
	M2	20	#11	STR.		19′-9″	2,099	
	V1	20	#11	④	31′-3″	32′-10″	3,489	
	SP-12	1	✻✻	⑤	36′-7″	1,176′-11″	1,228	
	SP-2	1	✻	⑥	27′-3″	1,264′-5″	845	
	SP-3	1	✻✻✻	⑦	10′-1″	296′-4″	198	
COLUMN/DRILLED PIER REINFORCING STEEL (LBS.)							20,173	
SPIRAL REINFORCING STEEL (LBS.)							4,703	

TABLE C

BENT 3 COLUMNS & DRILLED PIERS REINFORCING BILL OF MATERIAL

COLUMN/ DRILLED PIER	BAR	NO.	SIZE	TYPE	●	LENGTH	WEIGHT	DRILLED PIER LENGTH
1 & 2	M1	40	#11	STR.		33′-11″	7,208	34′-7″
	M2	40	#11	STR.		19′-9″	4,197	
	V1	40	#11	④	27′-3″	28′-10″	6,128	
	SP-1	2	✻✻	⑤	33′-8″	1086′-5″	2,266	
	SP-2	2	✻	⑥	23′-3″	1082′-2″	1,446	
	SP-3	2	✻✻✻	⑦	10′-1″	296′-4″	396	
COLUMN/DRILLED PIER REINFORCING STEEL (LBS.)							17,533	
SPIRAL REINFORCING STEEL (LBS.)							4,108	

✻✻ THE SP-1, SP-11, AND SP-12 SPIRAL REINFORCING STEEL SHALL BE W31 OR D-31 COLD DRAWN WIRE OR #5 PLAIN OR DEFORMED BAR WITH A 5″PITCH.

✻ THE SP-2 SPIRAL REINFORCING SHALL BE W20 OR D-20 COLD DRAWN WIRE OR #4 PLAIN OR DEFORMED BAR WITH A 3″PITCH.

✻✻✻ THE SP-3 SPIRAL REINFORCING SHALL BE W20 OR D-20 COLD DRAWN WIRE OR #4 PLAIN OR DEFORMED BAR WITH A 5″PITCH.

◆ FOR BENT 2 ONLY, THE CONTRACTOR'S ATTENTION IS CALLED TO THE FACT THAT THE LONGITUDINAL REINFORCEMENT FOR THE DRILLED PIERS IS DETAILED WITH 3 FEET EXTRA LENGTH.

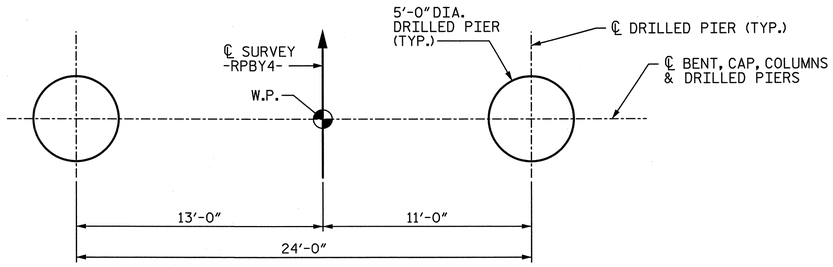

PLAN OF DRILLED PIERS

BAR TYPES

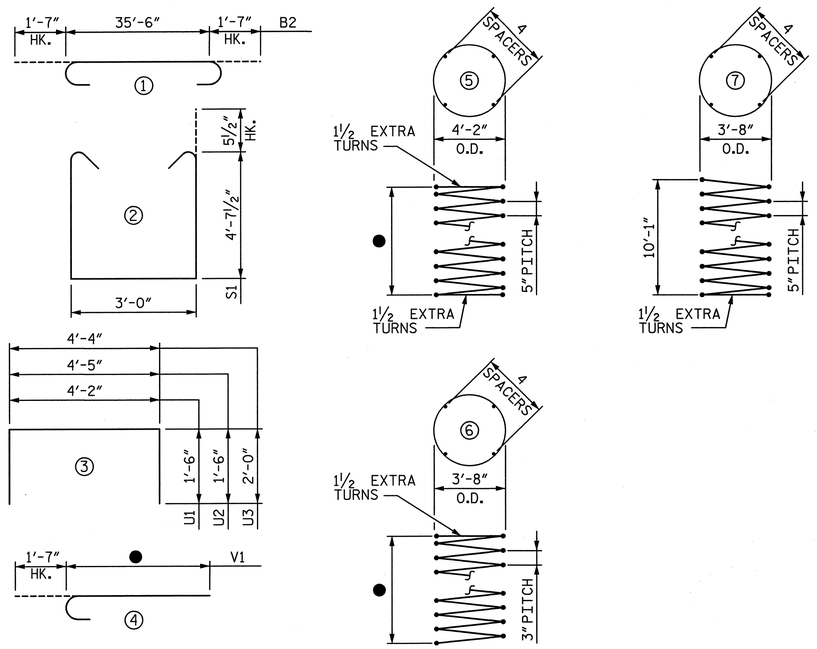

ALL BAR DIMENSIONS ARE OUT TO OUT

CAP REINFORCING BILL OF MATERIAL FOR ONE BENT (2 REQUIRED)

BAR	NO.	SIZE	TYPE	LENGTH	WEIGHT
B1	16	#11	STR.	35′-8″	3,032
B2	8	#11	①	38′-8″	1,643
B3	6	#5	STR.	35′-8″	223
B4	8	#4	STR.	15′-4″	82
B5	8	#4	STR.	4′-4″	23
S1	120	#5	②	13′-2″	1,648
U1	8	#4	③	7′-2″	38
U2	12	#4	③	7′-5″	59
U3	46	#4	③	8′-4″	256
CAP REINFORCING STEEL (LBS.)					7,004

NOTES:

FOR ● AND COLUMN/DRILLED PIER REINFORCING BILL OF MATERIAL SEE TABLE C THIS SHEET.

QUANTITIES

		BENT 2	BENT 3
REINFORCING STEEL	LBS.	27,177	24,537
SPIRAL REINFORCING STEEL	LBS.	4,703	4,108
CLASS A CONCRETE : POUR 2 - COLUMNS	CU. YDS.	25.1	21.4
POUR 3 - CAP	CU. YDS.	32.7	32.7
TOTAL	CU. YDS.	57.8	54.1
5′-0″Ø DRILLED PIERS IN SOIL	L.F.	58.0	48.2
5′-0″Ø DRILLED PIERS NOT IN SOIL	L.F.	22.0	21.0
TOTAL 5′-0″Ø DRILLED PIERS	L.F.	80.0	69.2
DRILLED PIER CONCRETE : POUR 1	CU. YDS.	58.2	50.3
CSL TUBES	L.F.	415.0	361.0

PROJECT NO. U-2524C

GUILFORD COUNTY

STATION: POT 6+01.72 -RPBY4-

SHEET 3 OF 3

NORTH CAROLINA PROFESSIONAL SEAL 28479 ENGINEER KEVIN G. BAILEY 5-30-13

STATE OF NORTH CAROLINA
DEPARTMENT OF TRANSPORTATION
RALEIGH

SUBSTRUCTURE BENT 2 & 3 BILL OF MATERIAL

-RAMP B-

DRAWN BY : VMW	DATE : 2-13	DESIGN ENGINEER OF RECORD: T. TOWNSEND	DATE : 5-13
CHECKED BY : PEK	DATE : 3-13		

STV / Ralph Whitehead Associates, Inc.
1000 West Morehead St., Ste. 200
Charlotte, NC 28208
NC License No. F-0991

REVISIONS						SHEET NO.
NO.	BY:	DATE:	NO.	BY:	DATE:	S-621
1			3			TOTAL SHEETS
2			4			330

5/29/2013 10:02:48 AM R:\ustation\Finals\(36) Bents 2 & 3 - Sheet 3 of 3.dgn

NOTES:

1. SEE SHEET 3 OF 3 FOR NOTES.
2. SEE SHEET 3 OF 3 FOR SECTION A-A.

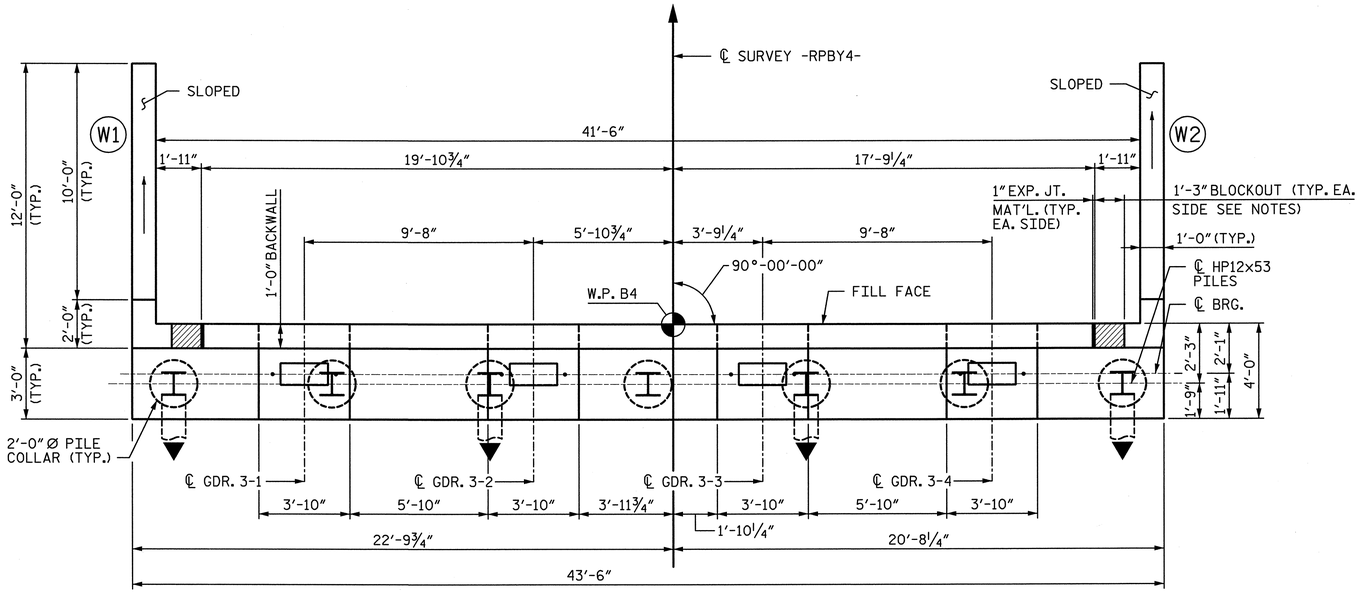

PLAN

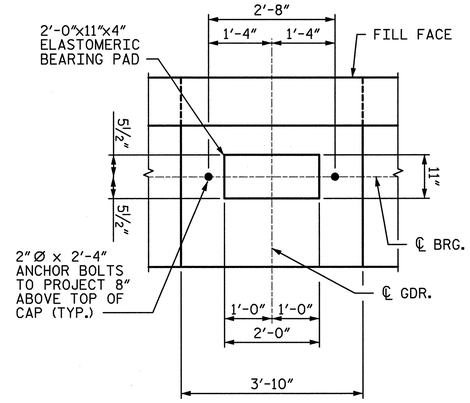

DETAIL A
(TYP. EA. GIRDER)

▲ REINFORCING NOT SHOWN FOR CLARITY. FOR DETAILS, SEE SHEET 2 OF 3.

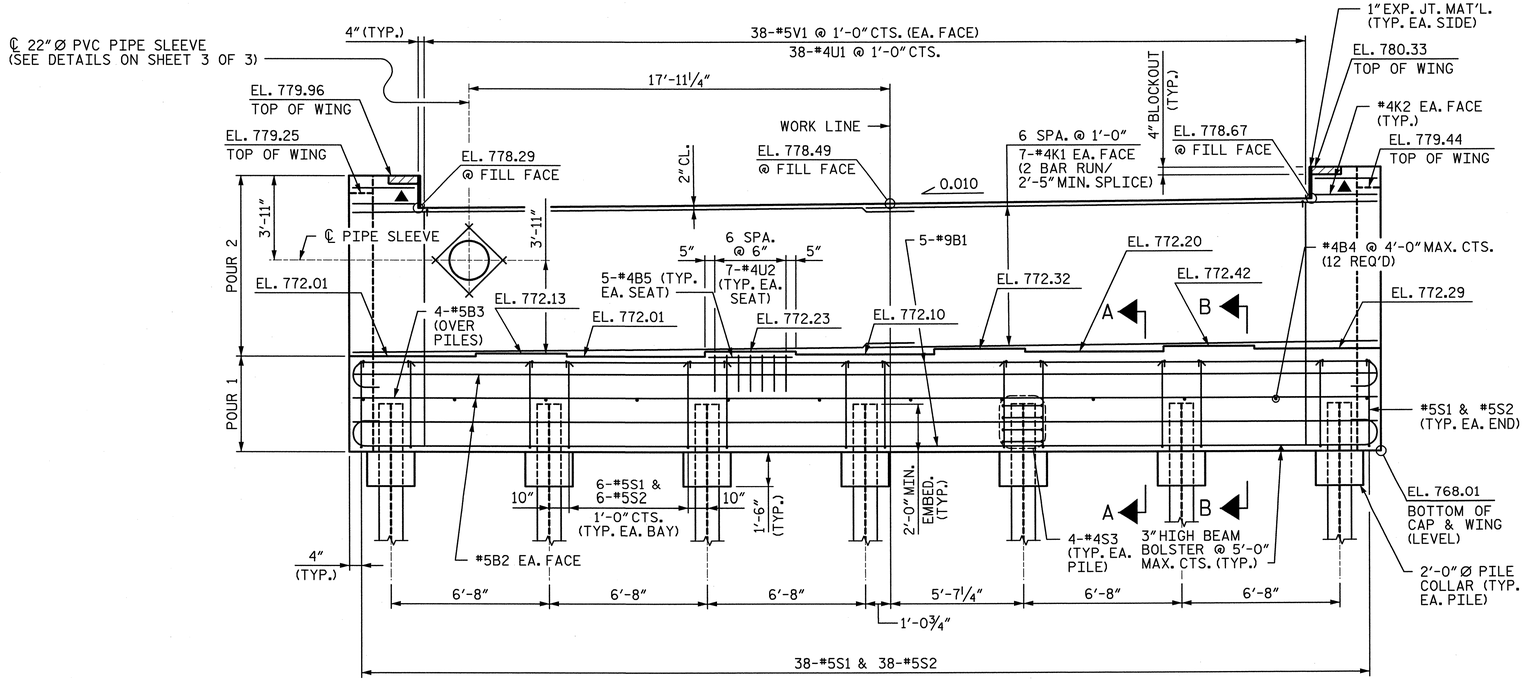

ELEVATION

NOTES:

SEE SHEET 3 OF 3 FOR NOTES.

SEE SHEET 3 OF 3 FOR SECTIONS A-A AND B-B.

PROJECT NO. U-2524C

GUILFORD COUNTY

STATION: POT 6+01.72 -RPBY4-

SHEET 1 OF 3

STATE OF NORTH CAROLINA
DEPARTMENT OF TRANSPORTATION
RALEIGH

SUBSTRUCTURE END BENT 2

-RAMP B-

NORTH CAROLINA PROFESSIONAL SEAL 28479 ENGINEER KEVIN G. BAILEY 5-30-13

DRAWN BY : AFM	DATE : 02-13	DESIGN ENGINEER OF RECORD: K. BAILEY	DATE : 5-13
CHECKED BY : JMG	DATE : 02-13		

STV / Ralph Whitehead Associates, Inc.
1000 West Morehead St., Ste. 200
Charlotte, NC 28208
NC License No. F-0991

REVISIONS					
NO.	BY:	DATE:	NO.	BY:	DATE:
1			3		
2			4		

SHEET NO. S-622

TOTAL SHEETS 836

5/29/2013 10:02:50 AM R:\ustation\Finals\(37) End Bent 2 - Sheet 1of 3.dgn

NOTES:
1. FOR NOTES, SEE SHEET 3 OF 3.

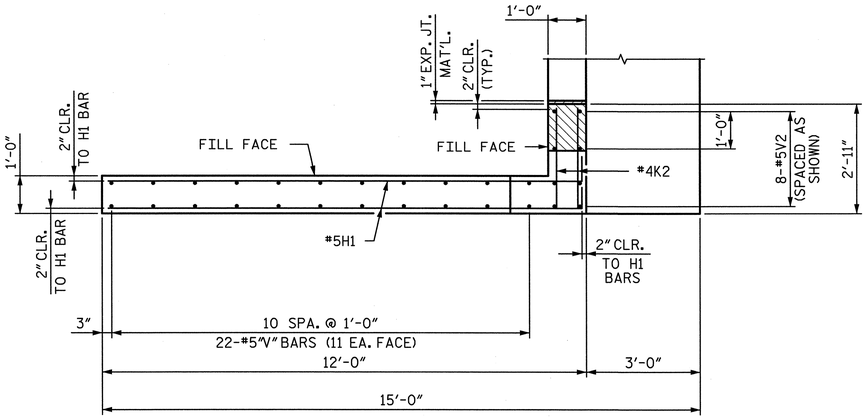

PLAN (W1)

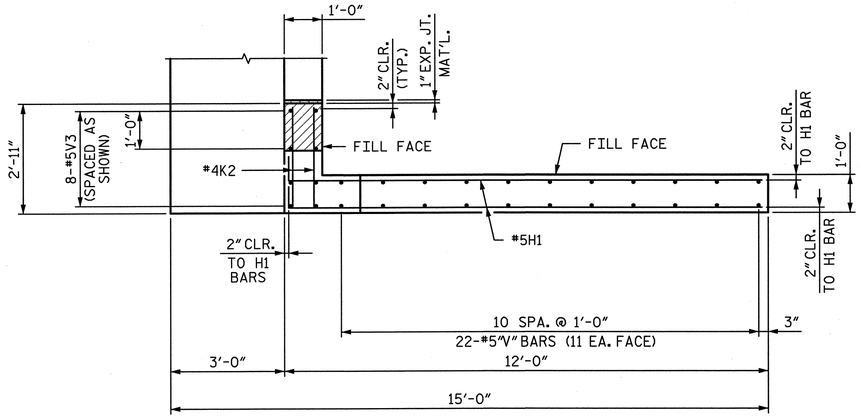

PLAN (W2)

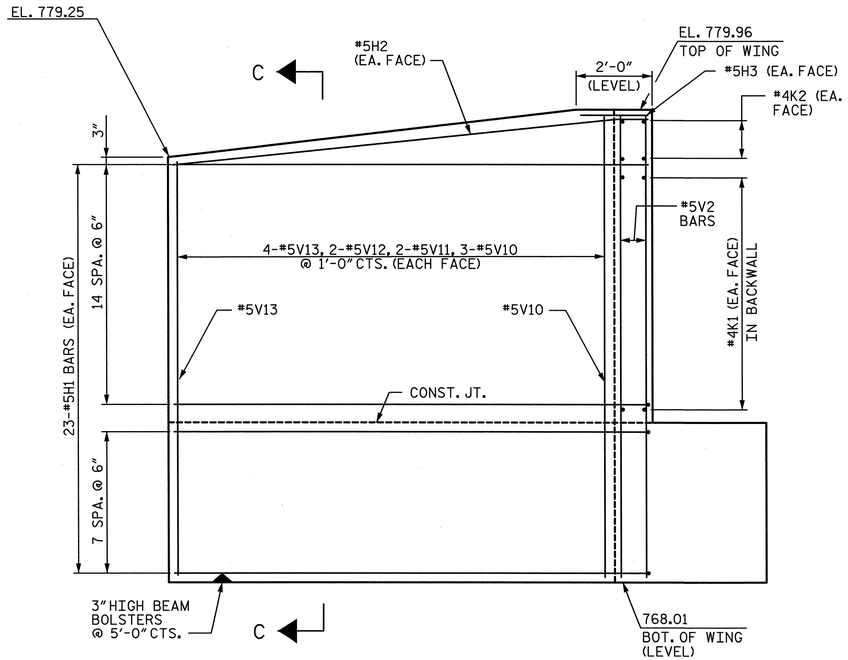

ELEVATION (W1)

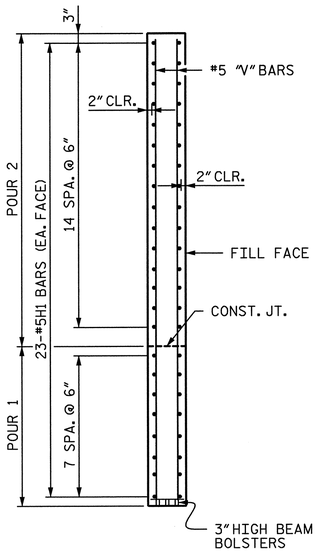

SECTION C-C

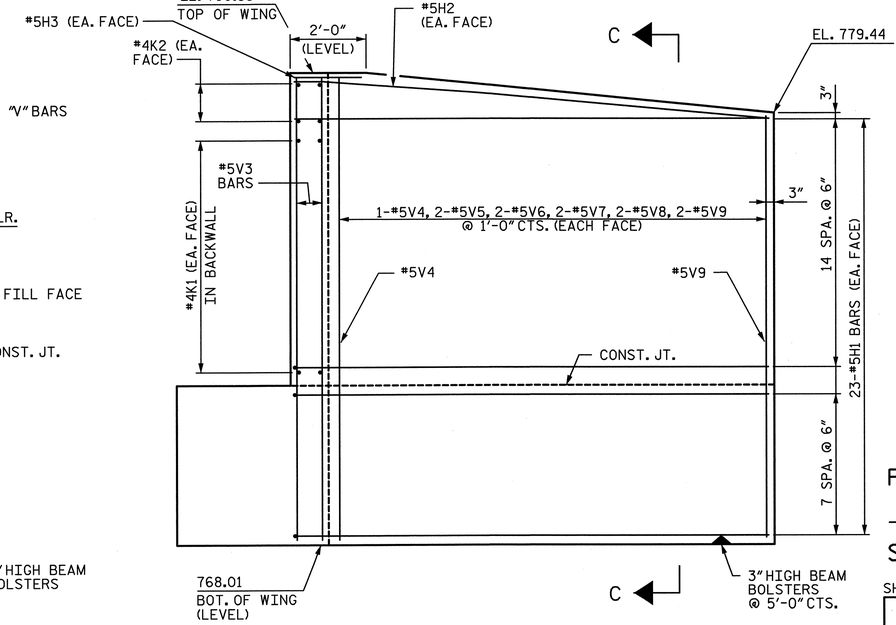

ELEVATION (W2)

PROJECT NO. U-2524C
GUILFORD COUNTY
STATION: POT 6+01.72 -RPBY4-

SHEET 2 OF 3

STATE OF NORTH CAROLINA
DEPARTMENT OF TRANSPORTATION
RALEIGH

SUBSTRUCTURE END BENT 2

-RAMP B-

DRAWN BY : PCS	DATE : 02-13	DESIGN ENGINEER OF RECORD: K. BAILEY	DATE : 5-13
CHECKED BY : JMG	DATE : 02-13		

STV / Ralph Whitehead Associates, Inc.
1000 West Morehead St., Ste. 200
Charlotte, NC 28208
NC License No. F-0991

REVISIONS						SHEET NO.
NO.	BY:	DATE:	NO.	BY:	DATE:	S-623
1			3			TOTAL SHEETS
2			4			83

5/29/2013 10:02:52 AM R:\station\Finals\(38) End Bent 2 - Sheet 2 of 3.dgn

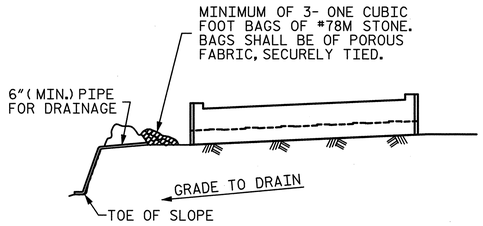

BAGGED STONE AND PIPE SHALL BE PLACED IMMEDIATELY AFTER COMPLETION OF END BENT EXCAVATION. PIPE MAY BE EITHER CONCRETE, CORRUGATED STEEL, CORRUGATED ALUMINUM ALLOY, OR CORRUGATED PLASTIC. PERFORATED PIPE WILL NOT BE ALLOWED.

BAGGED STONE SHALL REMAIN IN PLACE UNTIL THE ENGINEER DIRECTS THAT IT BE REMOVED. THE CONTRACTOR SHALL REMOVE AND DISPOSE OF SILT ACCUMULATIONS AT BAGGED STONE WHEN SO DIRECTED BY THE ENGINEER. BAGS SHALL BE REMOVED AND REPLACED WHENEVER THE ENGINEER DETERMINES THAT THEY HAVE DETERIORATED AND LOST THEIR EFFECTIVENESS.

NO SEPARATE PAYMENT WILL BE MADE FOR THIS WORK AND THE ENTIRE COST OF THIS WORK SHALL BE INCLUDED IN THE UNIT CONTRACT PRICE BID FOR THE SEVERAL PAY ITEMS.

TEMPORARY DRAINAGE AT END BENT

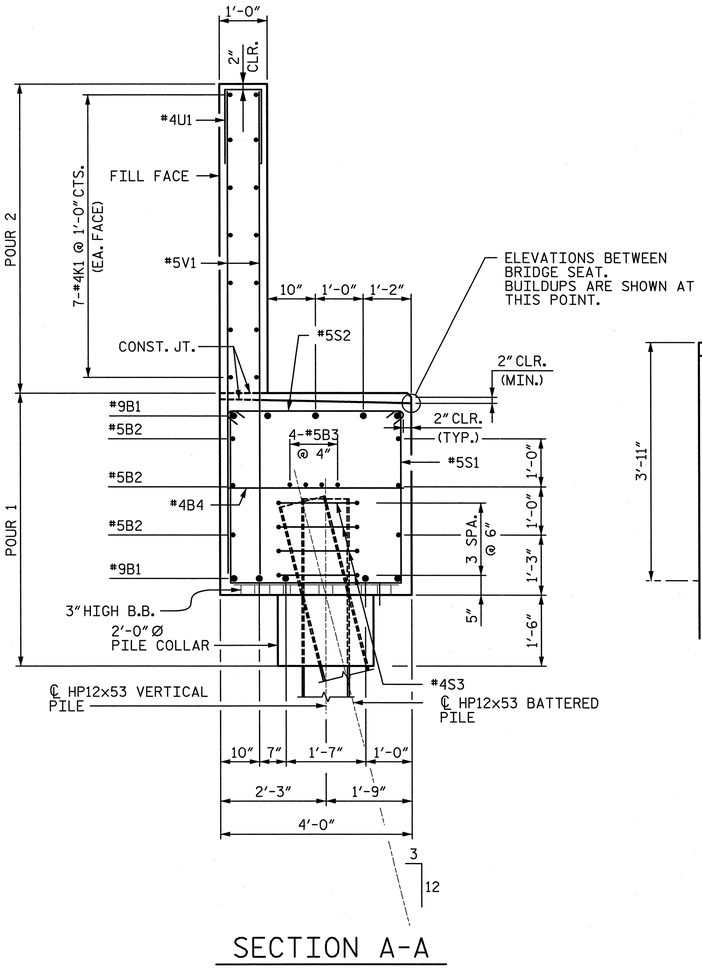

SECTION A-A

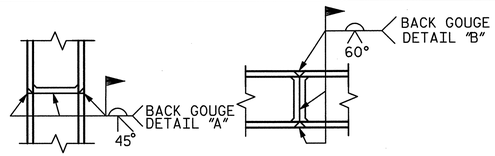

▲ PILE VERTICAL

▲ PILE HORIZONTAL OR VERTICAL

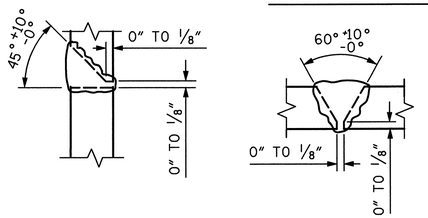

DETAIL "A" DETAIL "B"

▲ POSITION OF PILE DURING WELDING.

PILE SPLICE DETAILS

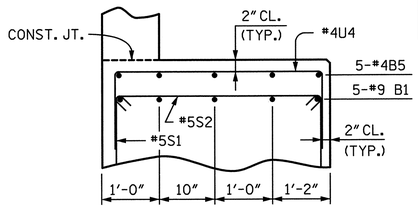

PARTIAL SECTION B

(TYP. AT EACH BRIDGE SEAT)
(ANCHOR BOLTS NOT SHOWN FOR CLARITY

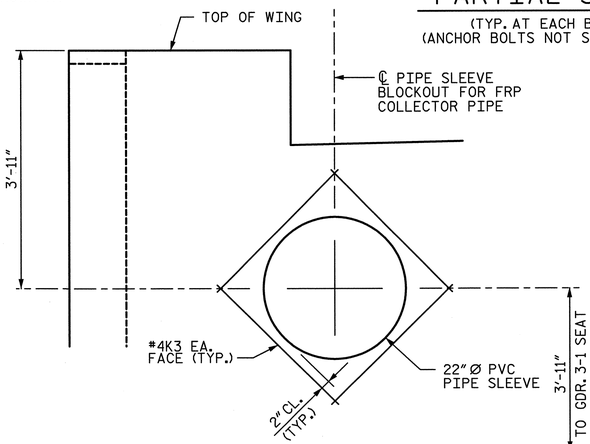

BLOCKOUT DETAIL FOR STRUCTURE DRAINAGE SYSTEM

REINFORCING STEEL IN BACKWALL SHALL BE CUT AS REQUIRED TO WITHIN 2" OF BLOCKOUT.

FOR ADDITIONAL DETAILS, SEE STRUCTURE DRAINAGE SYSTEM DETAILS.

BAR TYPES

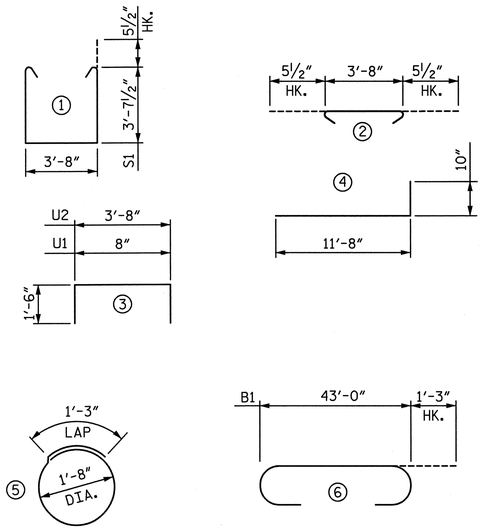

ALL BAR DIMENSIONS ARE OUT TO OUT.

REINFORCING BAR SCHEDULE

BAR	NO.	SIZE	TYPE	LENGTH	WEIGHT
B1	10	#9	⑥	45'-6"	1547
B2	6	#5	STR	43'-2"	270
B3	4	#5	STR	43'-2"	180
B4	12	#4	STR	3'-8"	29
B5	20	#4	STR	3'-6"	47
H1	92	#5	④	12'-6"	1199
H2	4	#5	STR	10'-10"	45
H3	4	#5	STR	1'-6"	6
K1	28	#4	STR	22'-9"	426
K2	8	#4	STR	2'-7"	14
K3	8	#4	STR	2'-6"	13
V1	76	#5	STR	10'-0"	793
V2	8	#5	STR	11'-6"	96
V3	8	#5	STR	11'-11"	99
V4	2	#5	STR	11'-8"	24
V5	4	#5	STR	11'-6"	48
V6	4	#5	STR	11'-5"	48
V7	4	#5	STR	11'-4"	47
V8	4	#5	STR	11'-3"	47
V9	4	#5	STR	11'-1"	46
V10	6	#5	STR	11'-3"	70
V11	4	#5	STR	11'-2"	47
V12	4	#5	STR	11'-1"	46
V13	8	#5	STR	11'-0"	92
S1	38	#5	①	11'-10"	469
S2	38	#5	②	4'-7"	182
S3	28	#4	⑤	6'-6"	122
U1	38	#4	③	3'-8"	93
U2	28	#4	③	6'-8"	125

QUANTITIES

	END BENT 1
REINFORCING STEEL LBS.	6,270
CLASS A CONCRETE	
POUR 1 (CAP & LOWER WING) : CU. YARDS	30.5
POUR 2 (BACKWALL & UPPER WING) : CU. YARDS	18.7
TOTAL : CU. YARDS	49.2
HP12x53 STEEL PILES NO.	7
HP12x53 STEEL PILES LIN. FEET	315

NOTES:

STIRRUPS IN CAP MAY BE SHIFTED AS NECESSARY TO CLEAR ANCHOR BOLTS.

BACKWALL SHALL BE PLACED BEFORE APPLYING THE EPOXY PROTECTIVE COATING.

THE TOP SURFACE AREAS OF THE END BENT CAP SHALL BE CURED IN ACCORDANCE WITH THE STANDARD SPECIFICATIONS EXCEPT THAT THE MEMBRANE CURING COMPOUND METHOD SHALL NOT BE USED.

THE TOP SURFACE OF THE CAP EXCEPT THE BRIDGE SEAT BUILDUPS SHALL BE SLOPED TRANSVERSELY FROM THE FILL FACE TO THE OUTSIDE FACE AT THE RATE OF 2%.

"U" BARS IN BRIDGE SEATS MAY BE SHIFTED TO CLEAR OTHER REINFORCING.

DIMENSIONS LOCATING PILES ARE SHOWN TO THE CENTERLINE OF THE PILE AT THE BOTTOM OF THE END BENT CAP.

THE CONCRETE IN THE SHADED AREA OF THE WING SHALL BE POURED AFTER THE BARRIER RAIL ARE CAST IF SLIP FORMING IS USED.

SEE "ELASTOMERIC BEARING DETAILS" SHEET FOR 2" Ø ANCHOR BOLT DETAILS.

INSTALL THE 4" Ø DRAIN PIPE THROUGH THE WING WALL AS REQUIRED FOR THE REINFORCED BRIDGE APPROACH FILLS, SEE ROADWAY PLANS. REINFORCING STEEL IN THE WING WALL MAY BE SHIFTED AS NECESSARY TO CLEAR THE DRAIN PIPE.

PROJECT NO. U-2524C

GUILFORD COUNTY

STATION: POT 6+01.72 -RPBY4-

SHEET 3 OF 3

STATE OF NORTH CAROLINA
DEPARTMENT OF TRANSPORTATION
RALEIGH

SUBSTRUCTURE END BENT 2

-RAMP B-

DRAWN BY : PCS	DATE : 02-13	DESIGN ENGINEER OF RECORD: K. BAILEY	DATE : 5-13
CHECKED BY : JMG	DATE : 02-13		

STV/ Ralph Whitehead Associates, Inc.
1000 West Morehead St., Ste. 200
Charlotte, NC 28208
NC License No. F-0991

REVISIONS						SHEET NO.
NO.	BY:	DATE:	NO.	BY:	DATE:	S-624
1			3			TOTAL SHEETS
2			4			83

5/29/2013 10:02:54 AM R:\station\Finals\39 End Bent 2 - Sheet 3 of 3.dgn

NOTES :

FOR BERM WIDTH DIMENSIONS, SEE GENERAL DRAWING.

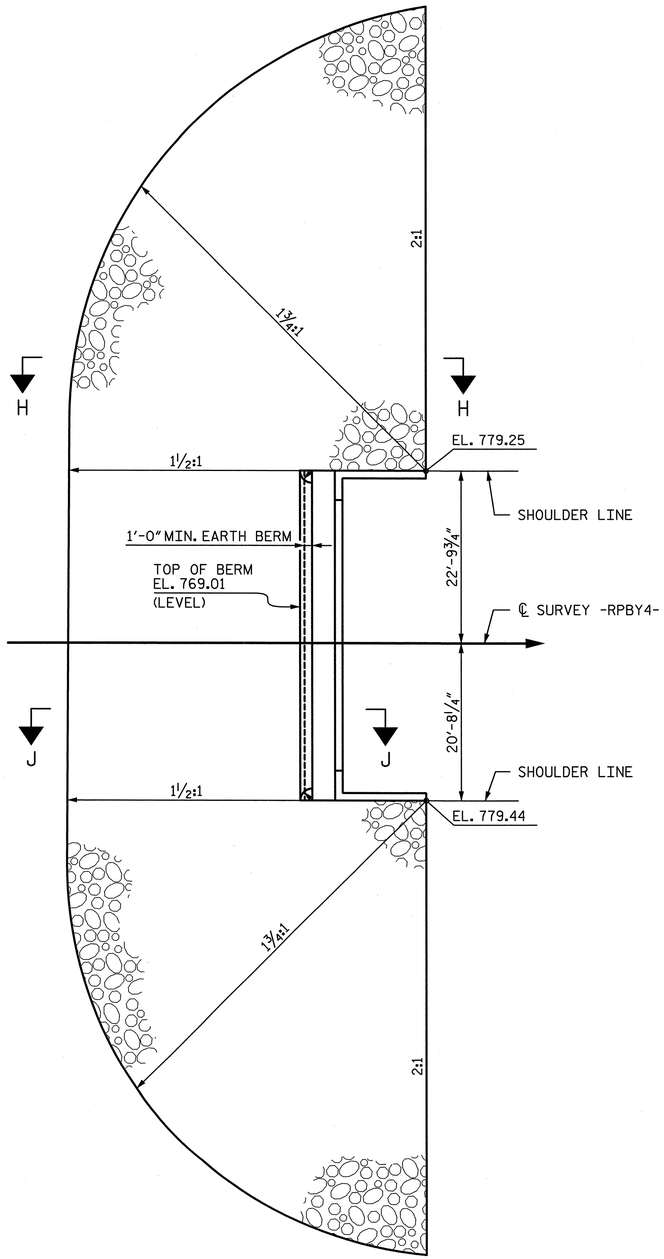

END BENT 2

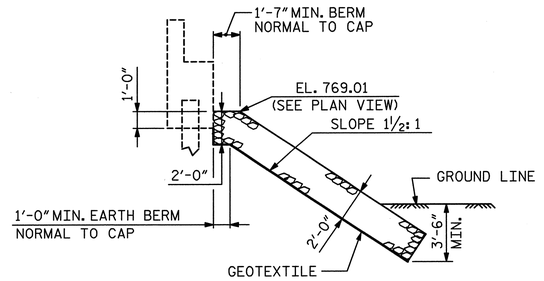

SECTION J-J

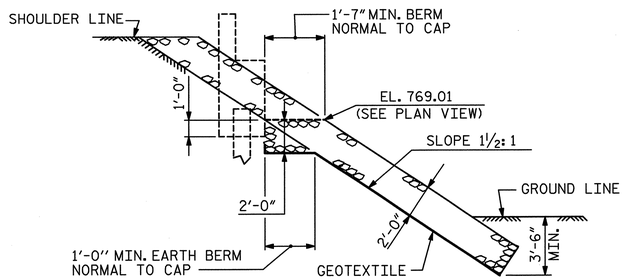

SECTION H-H

ESTIMATED QUANTITIES		
BRIDGE @ STA. 6+01.72 -RPBY4-	RIP RAP CLASS II (2'-0" THICK)	GEOTEXTILE FOR DRAINAGE
	TONS	SQUARE YARDS
END BENT 2	725	805

PROJECT NO. U-2524C

GUILFORD COUNTY

STATION: POT 6+01.72 -RPBY4-

STATE OF NORTH CAROLINA
DEPARTMENT OF TRANSPORTATION
RALEIGH

RIP RAP DETAILS

-RAMP B-

NORTH CAROLINA PROFESSIONAL SEAL 28479 ENGINEER KEVIN G. BAILEY
5-30-13

REVISIONS						SHEET NO.
NO.	BY:	DATE:	NO.	BY:	DATE:	S-625
1			3			TOTAL SHEETS
2			4			836

STV / Ralph Whitehead Associates, Inc.
1000 West Morehead St., Ste. 200
Charlotte, NC 28208
NC License No. F-0991

DRAWN BY : CLG	DATE : 2-13	DESIGN ENGINEER OF RECORD: K. BAILEY	DATE : 5-13
CHECKED BY : TRL	DATE : 2-13		

5/29/2013 10:02:56 AM R:\ustation\Finals\(40) Rip Rap.dgn

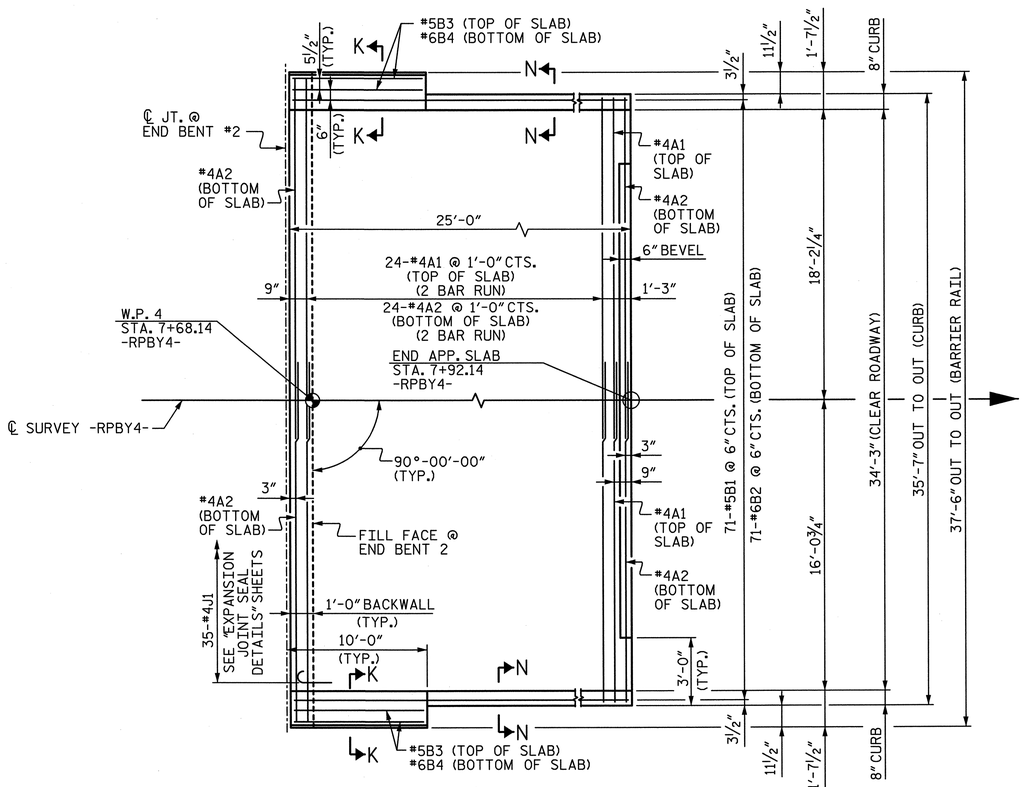

PLAN @ END BENT 2

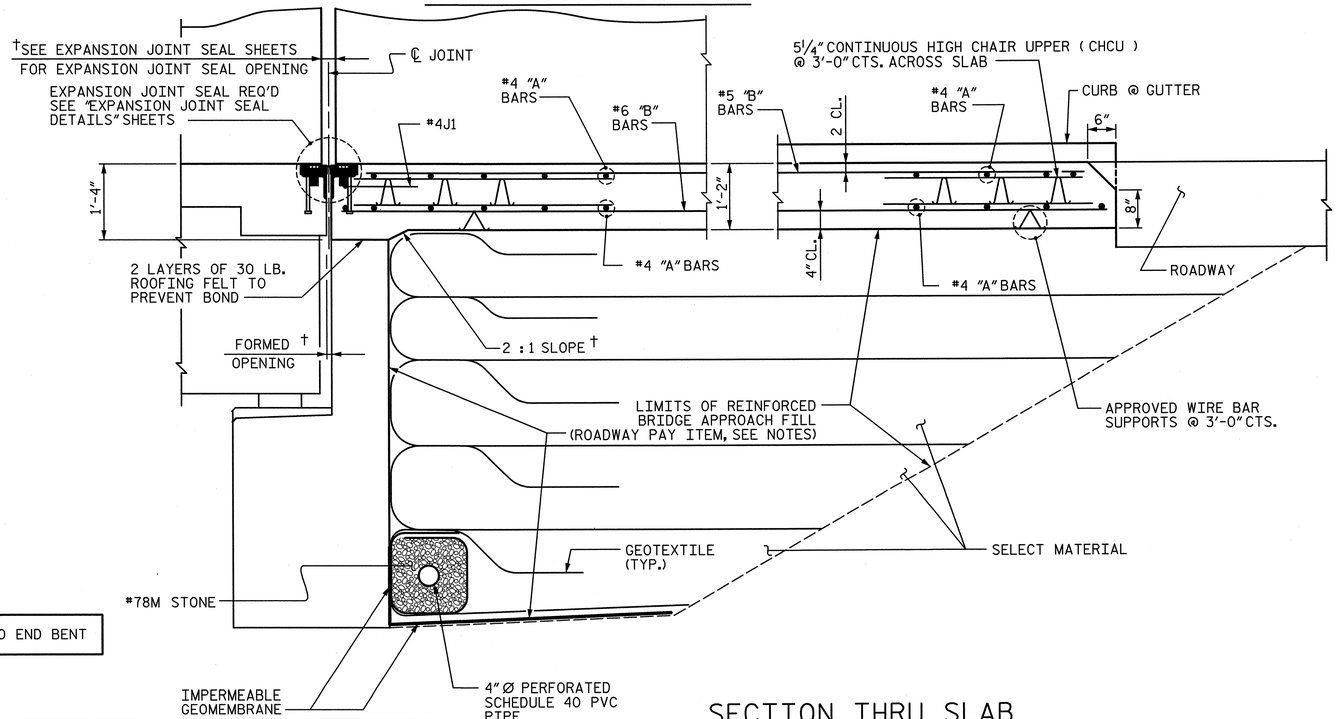

† NORMAL TO END BENT

SECTION THRU SLAB

NOTES:

APPROACH SLAB SHALL NOT BE CONSTRUCTED PRIOR TO COMPLETION OF THE BRIDGE DECK.

FOR REINFORCED BRIDGE APPROACH FILL INCLUDING GEOTEXTILE, IMPERMEABLE GEOMEMBRANE, 4" Ø DRAINAGE PIPE, #78M STONE, AND SELECT MATERIAL, SEE ROADWAY PLANS.

AREA BETWEEN THE WINGWALL AND APPROACH SLAB SHALL BE GRADED TO DRAIN THE WATER AWAY FROM THE FILL FACE OF THE BRIDGE AND SHALL BE PAVED. SEE ROADWAY PLANS.

FOR EXPANSION JOINT SEALS. SEE SPECIAL PROVISIONS.

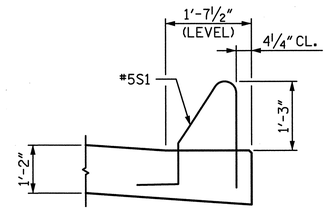

SECTION K-K

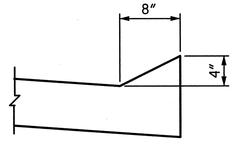

SECTION N-N

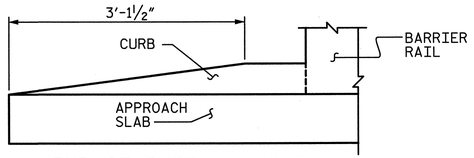

END OF CURB WITHOUT SHOULDER BERM GUTTER

CURB DETAILS

BILL OF MATERIAL
APPROACH SLAB AT EB 2

BAR	NO.	SIZE	TYPE	LENGTH	WEIGHT
✱A1	50	#4	STR	19'-7"	654
A2	52	#4	STR	19'-5"	674
✱B1	71	#5	STR	23'-9"	1759
B1	71	#6	STR	24'-8"	2631
✱B3	4	#5	STR	9'-6"	40
B4	4	#6	STR	9'-6"	57
✱J1	35	#4	1	1'-5"	33
REINFORCING STEEL ✱✱				LBS.	3362
✱EPOXY COATED REINFORCING STEEL ✱✱				LBS.	2486
CLASS AA CONCRETE ✱✱				C. Y.	39.3

BAR TYPES

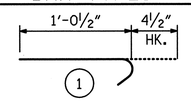

ALL BAR DIMENSIONS ARE OUT TO OUT

✱✱ QUANTITIES FOR BARRIER RAIL ARE NOT INCLUDED, SEE SHEET 2 OF 3.

THE QUANTITY OF #4J1 BARS ON THE BILL OF MATERIAL IS BASED ON 1'-0" CENTERS. J1 BARS SHALL BE PLACED AT EACH VERTICAL STUD ANCHORS EXCEEDS THE NUMBER OF J1 BARS SPECIFIED ADDITIONAL J1 BARS WILL NOT BE REQUIRED.

SPLICE LENGTHS

BAR SIZE	EPOXY COATED	UNCOATED
#4	2'-0"	1'-9"
#5	2'-6"	2'-2"
#6	3'-10"	2'-7"

PROJECT NO. U-2524C

GUILFORD COUNTY

STATION: POT 6+01.72 -RPBY4-

SHEET 1 OF 3

STATE OF NORTH CAROLINA
DEPARTMENT OF TRANSPORTATION
RALEIGH

BRIDGE APPROACH SLAB DETAILS

-RAMP B-

NORTH CAROLINA PROFESSIONAL SEAL 28479 ENGINEER KEVIN G. BAILEY 5-30-13

STV / Ralph Whitehead Associates, Inc.
1000 West Morehead St., Ste. 200
Charlotte, NC 28208
NC License No. F-0991

REVISIONS						SHEET NO.
NO.	BY:	DATE:	NO.	BY:	DATE:	S-626
1			3			TOTAL SHEETS
2			4			836

DRAWN BY : TJT DATE : 5-13
CHECKED BY : KGB DATE : 5-13
DESIGN ENGINEER OF RECORD: T. TOWNSEND DATE : 5-13

5/29/2013 10:02:58 AM R:\ustation\Finals\(4) AppSlab Details 1 of 3.dgn

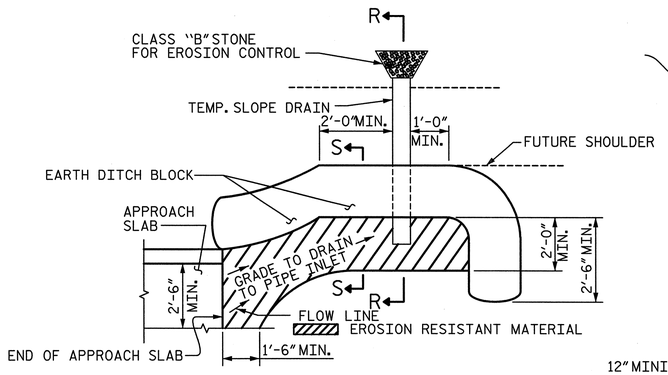

PLAN VIEW

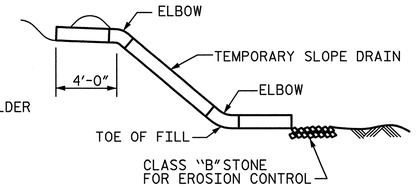

SECTION R-R

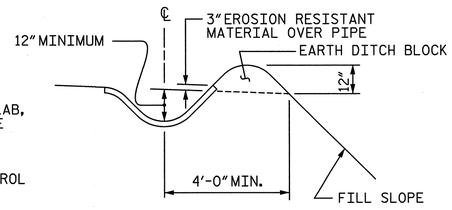

SECTION S-S

NOTE: IMMEDIATELY AFTER THE CONSTRUCTION OF THE APPROACH SLAB, THE CONTRACTOR SHALL PROVIDE TEMPORARY BERM AND SLOPE DRAIN. CONTRACTOR SHALL GRADE TO PIPE INLET AND PROVIDE EROSION RESISTANT MATERIAL AS SHOWN. THE EROSION RESISTANT MATERIAL SHALL BE EITHER 1) ASPHALT PLANT MIX, TYPE 1 OR TYPE 2, MIN. 2" DEPTH, 2) EROSION CONTROL MAT, OR 3) CONCRETE, AS DIRECTED BY THE ENGINEER. THE SLOPE DRAIN SHALL CONSIST OF A NON-PERFORATED TEMPORARY DRAINAGE PIPE, 12 INCHES IN DIAMETER.

TEMPORARY BERM AND SLOPE DRAIN DETAILS

(TO BE USED WHEN SHOULDER BERM GUTTER IS REQUIRED)

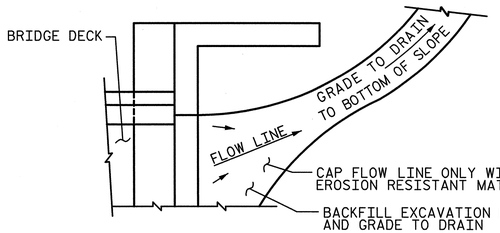

NOTE: IF THE APPROACH SLAB IS NOT CONSTRUCTED IMMEDIATELY AFTER THE BACKFILLING OF THE END BENT EXCAVATION, GRADE TO DRAIN TO THE BOTTOM OF THE SLOPE AND PROVIDE EROSION RESISTANT MATERIAL, SUCH AS FIBERGLASS ROVING OR AS DIRECTED BY THE ENGINEER TO PREVENT SOIL EROSION AND TO PROTECT THE AREA ADJACENT TO THE STRUCTURE. THE CONTRACTOR WILL BE REQUIRED TO REMOVE THESE MATERIALS PRIOR TO CONSTRUCTION OF THE APPROACH SLAB.

TEMPORARY DRAINAGE DETAIL

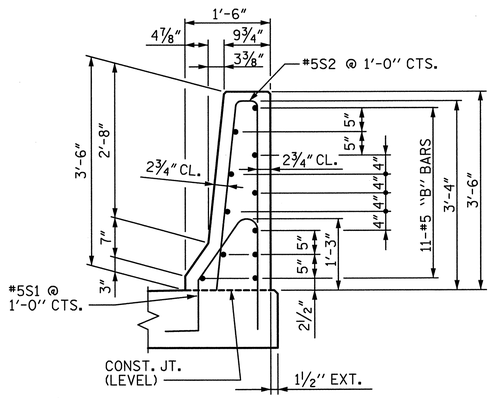

SECTION THRU RAIL

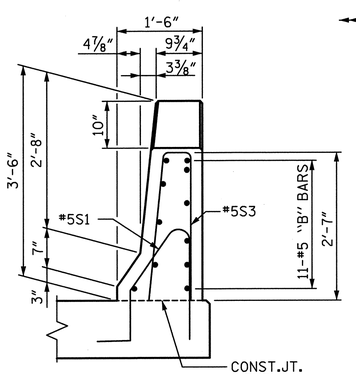

END VIEW

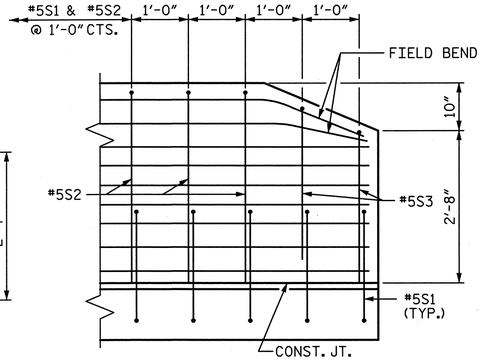

SIDE VIEW

END OF RAIL DETAILS

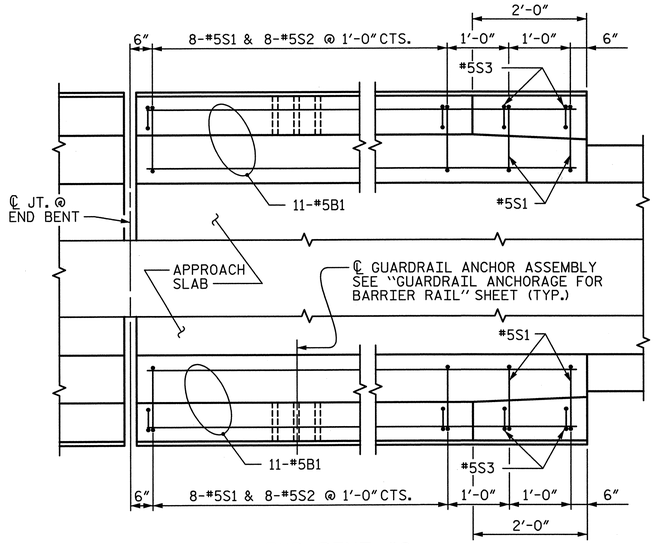

END BENT #2

PLAN OF BARRIER RAIL

BAR TYPES

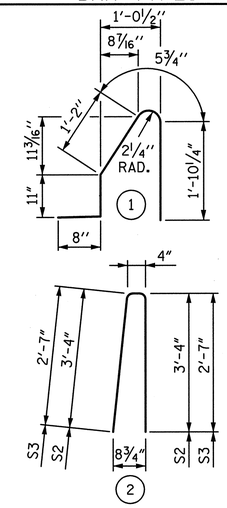

ALL BAR DIMENSIONS ARE OUT TO OUT

BILL OF MATERIAL

FOR CONCRETE BARRIER RAIL ONLY

BAR	NO.	SIZE	TYPE	LENGTH	WEIGHT
* B1	22	#5	STR	9'-6"	218
* S1	10	#5	①	5'-1"	53
* S2	8	#5	②	7'-0"	58
* S3	2	#5	②	5'-6"	11

* EPOXY COATED REINFORCING STEEL	340 LBS.
CLASS AA CONCRETE	2.7 CU. YDS.
TOTAL CONCRETE BARRIER RAIL	20 LIN. FT.

NOTES:

THE COST OF BARRIER RAIL ON THE APPROACH SLAB SHALL BE INCLUDED IN THE LINER FOOT CONTRACT BID PRICE FOR "CONCRETE BARRIER RAIL".

THE BARRIER RAIL ON EACH APPROACH SLAB SHALL NOT BE CAST UNTIL APPROACH SLAB CONCRETE HAS BEEN CAST AND HAS REACHED A MINIMUM COMPRESSIVE STRENGTH OF 3,000 PSI.

ALL REINFORCING IN THE BARRIER RAIL SHALL BE EPOXY COATED.

PROJECT NO. U-2524C

GUILFORD COUNTY

STATION: POT 6+01.72 -RPBY4-

SHEET 2 OF 3

STATE OF NORTH CAROLINA
DEPARTMENT OF TRANSPORTATION
RALEIGH

BRIDGE APPROACH SLAB DETAILS

-RAMP B-

NORTH CAROLINA PROFESSIONAL SEAL 28479 ENGINEER KEVIN G. BAILEY
5-30-13

REVISIONS						SHEET NO.
NO.	BY:	DATE:	NO.	BY:	DATE:	S-627
1			3			TOTAL SHEETS
2			4			830

STV / Ralph Whitehead Associates, Inc.
1000 West Morehead St., Ste. 200
Charlotte, NC 28208
NC License No. F-0991

DRAWN BY : TJT DATE : 5-13
CHECKED BY : KGB DATE : 5-13

DESIGN ENGINEER OF RECORD: T. TOWNSEND DATE : 5-13

5/29/2013 10:03:01 AM R:\station\Finals\(42) AppSlab Details 2 of 3.dgn

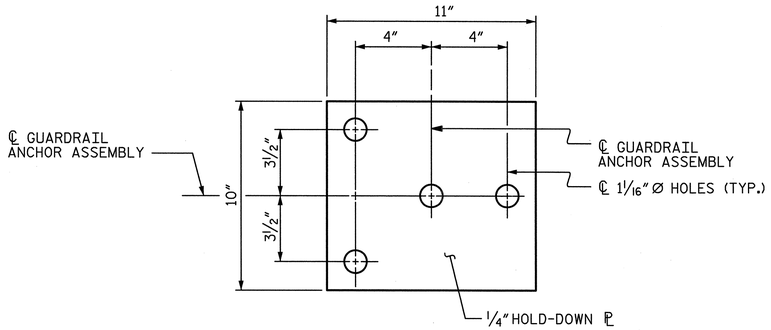

PLAN

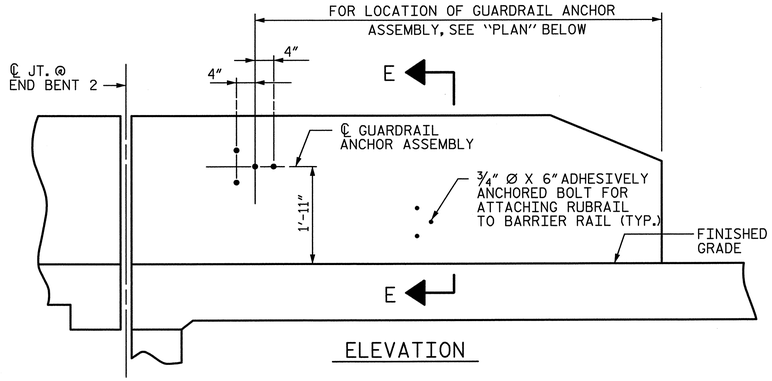

ELEVATION

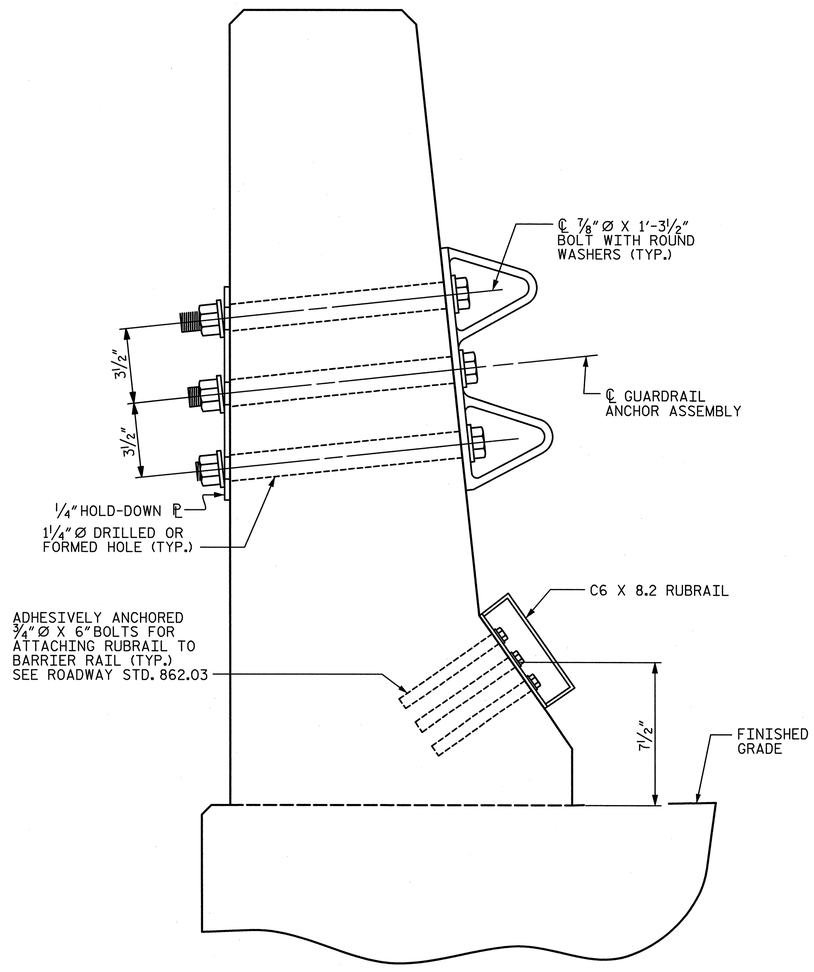

SECTION E-E

GUARDRAIL ANCHOR ASSEMBLY DETAILS

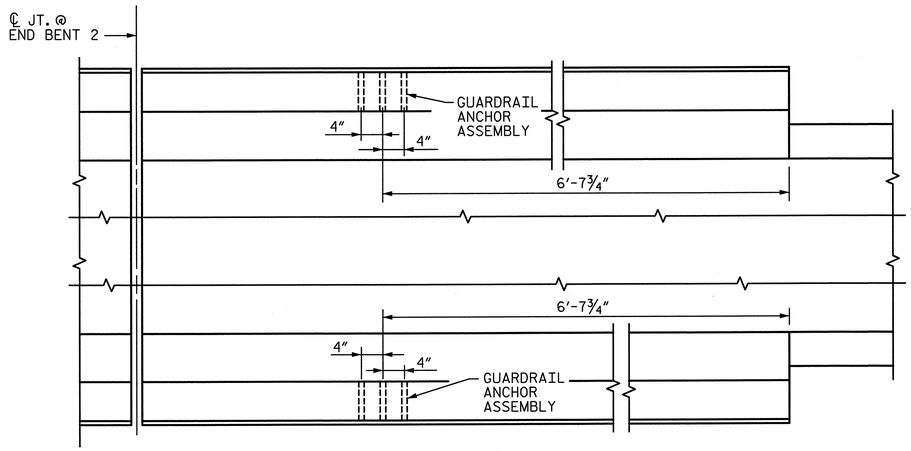

PLAN

LOCATION OF ANCHORS FOR GUARDRAIL

NOTES

THE GUARDRAIL ANCHOR ASSEMBLY SHALL CONSIST OF A ¼″ HOLD-DOWN PLATE AND 4 - ⅞″ Ø BOLTS WITH NUTS AND WASHERS, RUBRAIL, AND ADHESIVELY ANCHORED BOLTS.

THE HOLD-DOWN PLATE SHALL CONFORM TO AASHTO M270 GRADE 36. AFTER FABRICATION, THE HOLD-DOWN PLATE SHALL BE HOT-DIP GALVANIZED IN ACCORDANCE WITH AASHTO M111.

BOLTS SHALL CONFORM TO THE REQUIREMENTS OF ASTM A307 AND NUTS SHALL CONFORM TO THE REQUIREMENTS OF AASHTO M291. BOLTS, NUTS AND WASHERS SHALL BE GALVANIZED. (AT THE CONTRACTOR'S OPTION, STAINLESS STEEL BOLTS, NUTS AND WASHERS MAY BE USED AS AN ALTERNATE FOR THE ⅞″ Ø GALVANIZED BOLTS, NUTS AND WASHERS. THEY SHALL CONFORM TO OR EXCEED THE MECHANICAL REQUIREMENTS OF ASTM A307. THE USE OF THIS ALTERNATE SHALL BE APPROVED BY THE ENGINEER.)

THE GUARDRAIL ANCHOR ASSEMBLY IS REQUIRED AT ALL POINTS WHERE APPROACH GUARDRAIL IS TO BE ATTACHED TO THE END OF BARRIER RAIL. FOR POINTS OF ATTACHMENT, SEE SKETCH.

AFTER INSTALLATION, THE EXPOSED THREAD OF THE BOLT SHALL BE BURRED WITH A SHARP POINTED TOOL.

THE COST OF THE GUARDRAIL ANCHOR ASSEMBLY SHALL BE INCLUDED IN THE UNIT CONTRACT PRICE BID FOR CONCRETE BARRIER RAIL.

THE 1¼″ Ø HOLES SHALL BE FORMED OR DRILLED WITH A CORE BIT. IMPACT TOOLS WILL NOT BE PERMITTED. ANY CONCRETE DAMAGED BY THIS WORK SHALL BE REPAIRED TO THE SATISFACTION OF THE ENGINEER.

THE C6 X 8.2 RUBRAIL IS TO BE ADHESIVELY ANCHORED TO THE RAIL USING THREE ¾″ Ø X 6″ BOLTS WITH WASHERS. LEVEL ONE FIELD TESTING IS REQUIRED, AND THE YIELD LOAD OF THE ¾″ Ø BOLT IS 12 KIPS. FOR ADHESIVELY ANCHORED ANCHOR BOLTS OR DOWELS, SEE STANDARD SPECIFICATIONS. SEE ROADWAY STANDARD 862.03 FOR DETAILS AND LOCATION OF THE RUBRAIL.

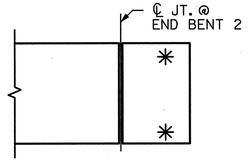

SKETCH SHOWING POINTS OF ATTACHMENTS

✳ DENOTES GUARDRAIL ANCHOR ASSEMBLY

PROJECT NO. U-2524C

GUILFORD COUNTY

STATION: POT 6+01.72 -RPBY4-

SHEET 3 OF 3

STATE OF NORTH CAROLINA
DEPARTMENT OF TRANSPORTATION
RALEIGH

GUARDRAIL ANCHORAGE FOR BARRIER RAIL

-RAMP B-

NORTH CAROLINA PROFESSIONAL SEAL 28479 ENGINEER KEVIN G. BAILEY
5-30-13

STV / Ralph Whitehead Associates, Inc.
1000 West Morehead St., Ste. 200
Charlotte, NC 28208
NC License No. F-0991

REVISIONS						SHEET NO.
NO.	BY:	DATE:	NO.	BY:	DATE:	S-628
1			3			TOTAL SHEETS
2			4			830

DRAWN BY : MM	DATE : 10-12	DESIGN ENGINEER OF RECORD: T. TOWNSEND	DATE : 5-13
CHECKED BY : YT	DATE : 10-12		

5/29/2013 10:03:03 AM R:\station\Finals\(43) Standard Guardrail Attachment.dgn

F.A. PROJ. NO. NHF-0708(62)

4+00 5+00 6+00 7+00 8+00 9+00

(-) 0.7140% (-) 3.6639%

GRADE DATA

PVI STA. = 4+00.00
PVI EL. = 791.74
LVC = 450.00

800 790 780 770 760 750 740 730

SPAN 1 SPAN 2 SPAN 3 SPAN 4

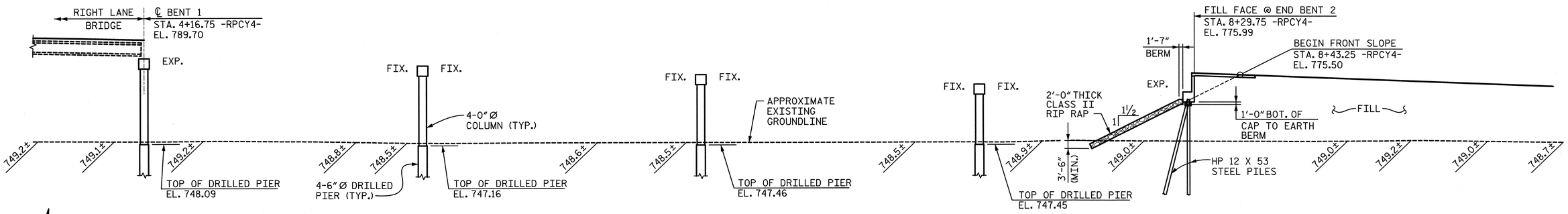

BENT 1 BENT 2 BENT 3 BENT 4 END BENT 2

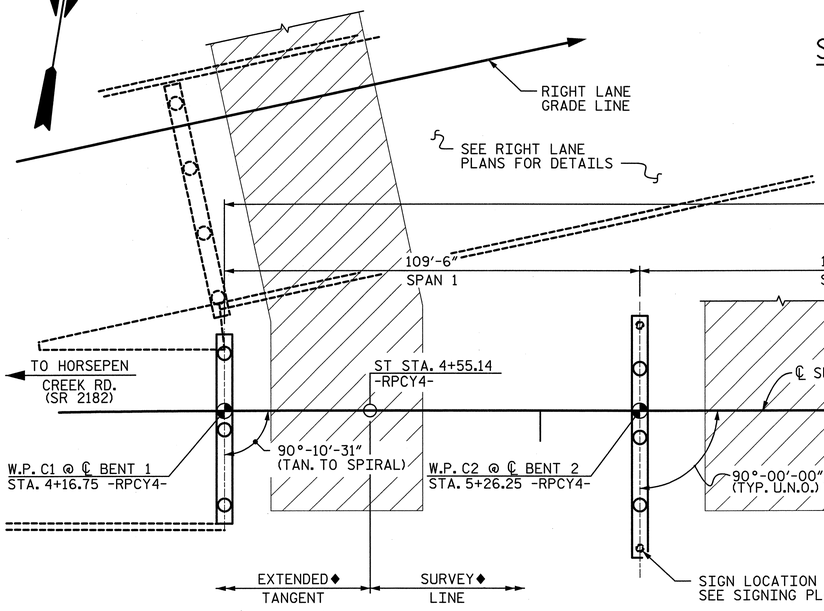

SECTION ALONG ℄ SURVEY -RPCY4-

(SECTION AT RIGHT ANGLE TO BENTS)

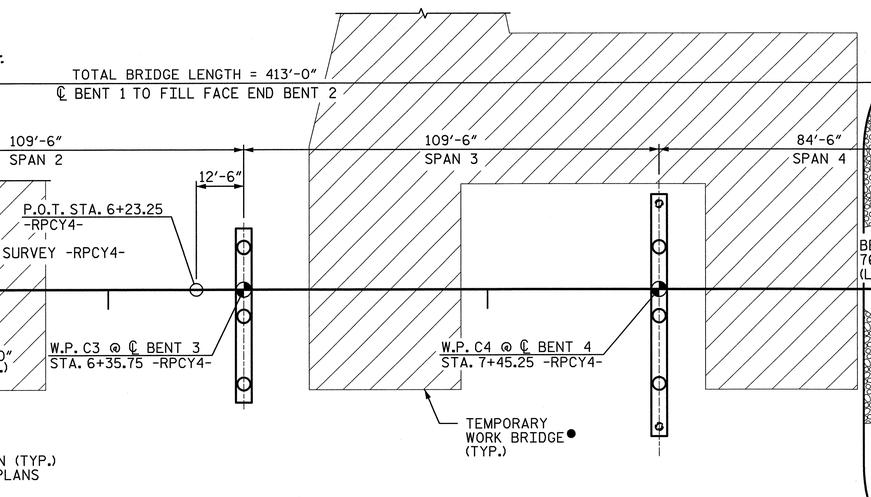

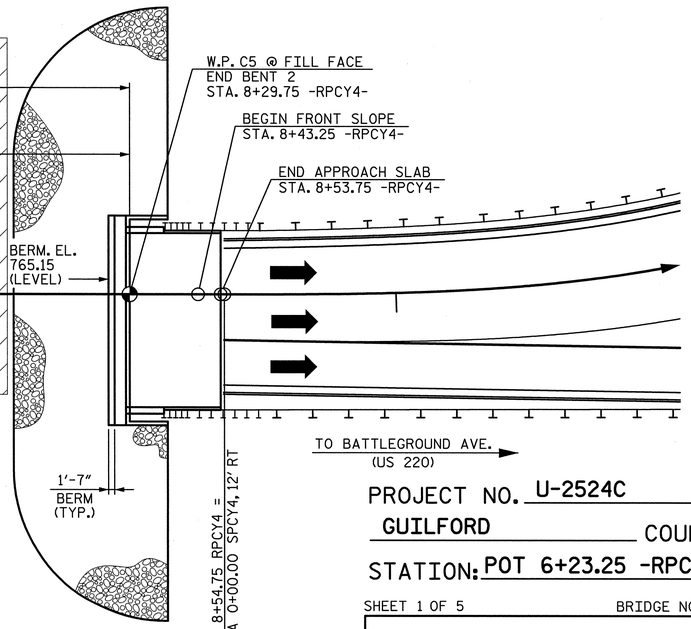

HORIZ. CURVE DATA -RPCY4-

PIs = 1+33.38
θs = 4°45'17.4" (RT.)
Ls = 200.00'
LT = 133.38'
ST = 66.71'

PI = 2+27.58
Δ = 2°37'19.3" (RT.)
D = 4°45'17.4"
L = 55.14'
T = 27.58'
R = 1,205.00'

PIs = 3+21.85
θs = 4°45'17.4" (RT.)
Ls = 200.00'
LT = 133.38'
ST = 66.71'

PIs = 9+38.28
θs = 12°03'25.9" (LT.)
Ls = 125.00'
LT = 83.53'
ST = 41.84'

PI = 12+93.78
Δ = 93°11'36.6" (LT.)
D = 19°17'29.4"
L = 483.08'
T = 314.03'
R = 297.00'

PIs = 15+04.67
θs = 12°03'25.9" (LT.)
Ls = 125.00'
LT = 83.53'
ST = 41.84'

PLAN

(PILES NOT SHOWN FOR CLARITY)

♦ BRIDGE IS ALIGNED PARALLEL TO SURVEY LINE AND EXTENDED TANGENT. SEE GENERAL DRAWING SHEET 3 OF 5. WORKPOINT IS ON ℄ SURVEY -RPCY4-.

● SEE LEFT LANE BRIDGE PLANS FOR TEMPORARY WORK BRIDGE AND PAY ITEM.

PROJECT NO. U-2524C
GUILFORD COUNTY
STATION: POT 6+23.25 -RPCY4-

SHEET 1 OF 5 BRIDGE NO. 1130

STATE OF NORTH CAROLINA
DEPARTMENT OF TRANSPORTATION
RALEIGH

GENERAL DRAWING
BRIDGE ON RAMP C
OVER WETLAND

-RAMP C-

NORTH CAROLINA PROFESSIONAL ENGINEER SEAL 18165 MARK F. ROBBINS 5-30-13

NORTH CAROLINA PROFESSIONAL ENGINEER SEAL 28479 KEVIN G. BAILEY 5-30-13

STV / Ralph Whitehead Associates, Inc.
1000 West Morehead St., Ste. 200
Charlotte, NC 28208
NC License No. F-0991

REVISIONS						SHEET NO.
NO.	BY:	DATE:	NO.	BY:	DATE:	S-629
1			3			TOTAL SHEETS
2			4			834

DRAWN BY : MM DATE : 3-12
CHECKED BY : PLF DATE : 12-12
DESIGN ENGINEER OF RECORD: T. TOWNSEND DATE : 5-13

5/30/2013 6:58:04 AM R:\station\FInals\100 Plan and Elevation.dgn

NOTES:

1. FOR FOUNDATION NOTES, SEE GENERAL DRAWING SHEET 5 OF 5.
2. FOR ADDITIONAL INFORMATION, SEE EXTENDED TANGENT LAYOUT ON SHEET 3 OF 5.

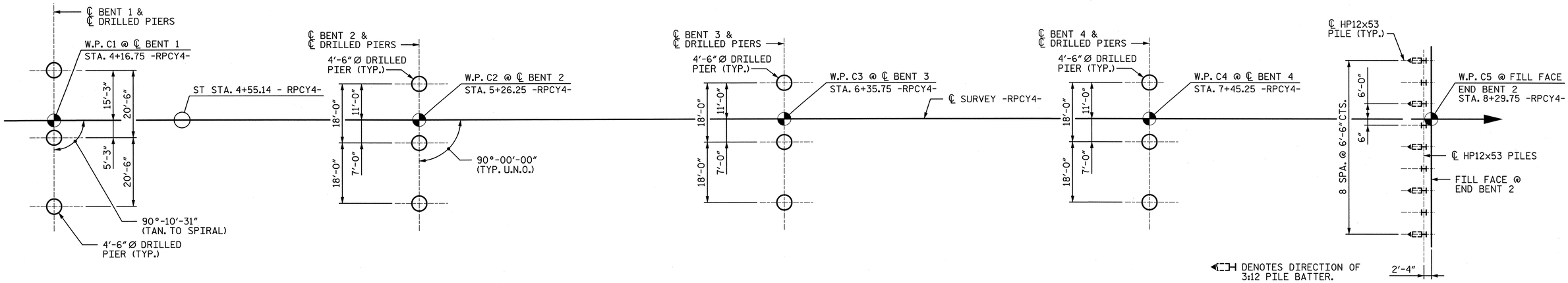

BENT 1 | BENT 2 | BENT 3 | BENT 4 | END BENT 2

FOUNDATION LAYOUT

(DIMENSIONS TO DRILLED PIERS ARE TO ℄ OF DRILLED PIERS)
(DIMENSIONS TO PILES ARE TO ℄ PILES AT BOTTOM OF END BENT CAP)

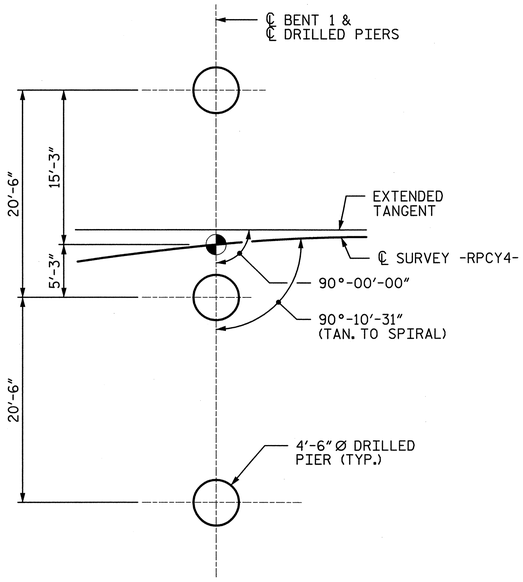

BENT 1 DETAIL
(FOR ADDITIONAL DETAILS, SEE EXTENDED TANGENT LAYOUT)

PROJECT NO. U-2524C
GUILFORD COUNTY
STATION: POT 6+23.25 -RPCY4-

SHEET 2 OF 5

STATE OF NORTH CAROLINA
DEPARTMENT OF TRANSPORTATION
RALEIGH

GENERAL DRAWING
BRIDGE ON RAMP C
OVER WETLANDS

-RAMP C-

DRAWN BY : VMW	DATE : 2-13	DESIGN ENGINEER OF RECORD: K. BAILEY	DATE : 5-13
CHECKED BY : CLG	DATE : 3-13		

NORTH CAROLINA PROFESSIONAL SEAL 18165 ENGINEER MARK F. ROBBINS 5-30-13

NORTH CAROLINA PROFESSIONAL SEAL 28479 ENGINEER KEVIN G. BAILEY 5-30-13

STV / Ralph Whitehead Associates, Inc.
1000 West Morehead St., Ste. 200
Charlotte, NC 28208
NC License No. F-0991

REVISIONS						SHEET NO.
NO.	BY:	DATE:	NO.	BY:	DATE:	S-630
1			3			TOTAL SHEETS
2			4			830

5/29/2013 9:58:55 AM R:\station\Finals\(02) Foundation Layout.dgn

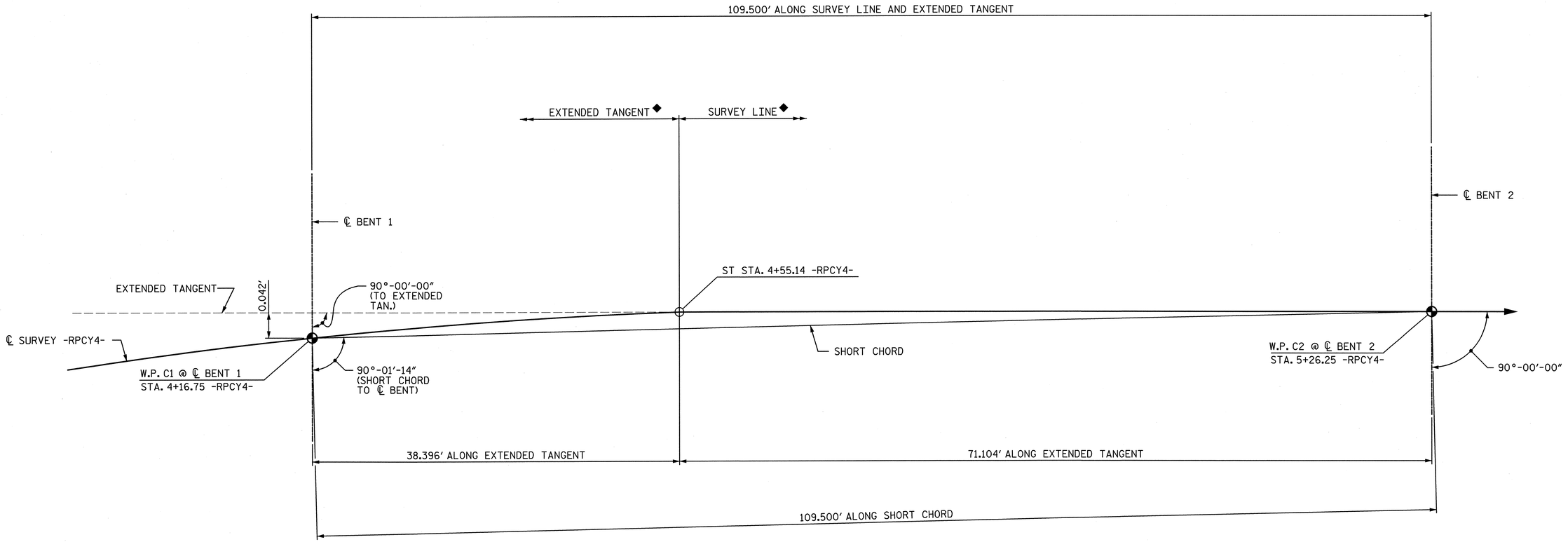

◆BRIDGE IS ALONG THE EXTENDED TANGENT.

HORIZ. CURVE DATA -RPCY4-

PIs = 1+33.38
θs = 4°45'17.4" (RT.)
Ls = 200.00'
LT = 133.38'
ST = 66.71'

PI = 2+27.58
Δ = 2°37'19.3" (RT.)
D = 4°45'17.4"
L = 55.14'
T = 27.58'
R = 1,205.00'

PIs = 3+21.85
θs = 4°45'17.4" (RT.)
Ls = 200.00'
LT = 133.38'
ST = 66.71'

PIs = 9+38.28
θs = 12°03'25.9" (LT.)
Ls = 125.00'
LT = 83.53'
ST = 41.84'

PI = 12+93.78
Δ = 93°11'36.6" (LT.)
D = 19°17'29.4"
L = 483.08'
T = 314.03'
R = 297.00'

PIs = 15+04.67
θs = 12°03'25.9" (LT.)
Ls = 125.00'
LT = 83.53'
ST = 41.84'

EXTENDED TANGENT LAYOUT

(℄ SURVEY -RPCY4- AND EXTENDED TANGENT ARE EXAGGERATED FOR CLARITY)

NORTH CAROLINA PROFESSIONAL SEAL 18165 ENGINEER MARK F ROBBINS
5-30-13

NORTH CAROLINA PROFESSIONAL SEAL 28479 ENGINEER KEVIN G. BAILEY
5-30-13

PROJECT NO. U-2524C
GUILFORD COUNTY
STATION: POT 6+23.25 -RPCY4-

SHEET 3 OF 5

STATE OF NORTH CAROLINA
DEPARTMENT OF TRANSPORTATION
RALEIGH

GENERAL DRAWING
BRIDGE ON RAMP C
OVER WETLANDS

-RAMP C-

DRAWN BY : CLG	DATE : 2-13	DESIGN ENGINEER OF RECORD: M. ROBBINS	DATE : 5-13
CHECKED BY : MFR	DATE : 2-13		

STV / Ralph Whitehead Associates, Inc.
1000 West Morehead St., Ste. 200
Charlotte, NC 28208
NC License No. F-0991

REVISIONS						SHEET NO.
NO.	BY:	DATE:	NO.	BY:	DATE:	S-631
1			3			TOTAL SHEETS
2			4			63

5/29/2013 9:58:58 AM R:\ustation\Finals\03) Tangent_Extension_Layout.dgn

BM #12
N 870838.9390, E 1746657.1000
STA. 174+63 -BL-, OFFSET 122' LT., ELEV. 748.99'
(STA. 421+03.23 -L-, OFFSET 129.906' LT.)

FOR UTILITY INFORMATION, SEE UTILITY PLANS AND SPECIAL PROVISIONS.

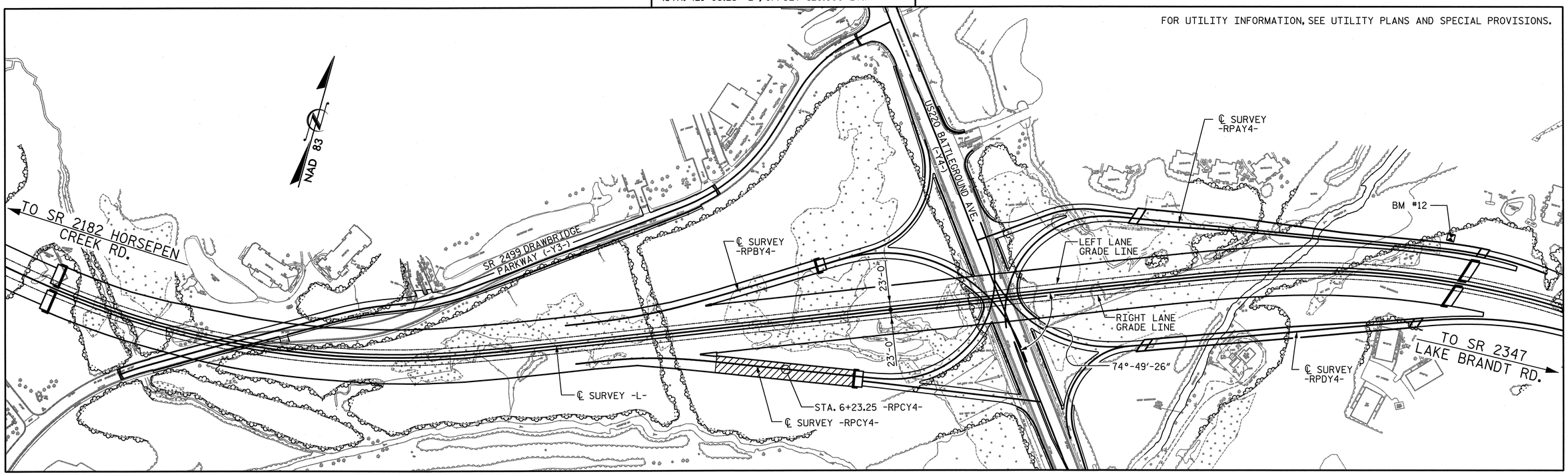

LOCATION SKETCH

PROJECT NO. U-2524C
GUILFORD COUNTY
STATION: POT 6+23.25 -RPCY4-

SHEET 4 OF 5

STATE OF NORTH CAROLINA
DEPARTMENT OF TRANSPORTATION
RALEIGH

GENERAL DRAWING
BRIDGE ON RAMP C
OVER WETLANDS

-RAMP C-

NORTH CAROLINA PROFESSIONAL ENGINEER SEAL 18165 MARK F. ROBBINS 5-30-13

NORTH CAROLINA PROFESSIONAL ENGINEER SEAL 28479 KEVIN G. BAILEY 5-30-13

STV/ Ralph Whitehead Associates, Inc.
1000 West Morehead St., Ste. 200
Charlotte, NC 28208
NC License No. F-0991

REVISIONS					
NO.	BY:	DATE:	NO.	BY:	DATE:
1			3		
2			4		

SHEET NO. S-632
TOTAL SHEETS 8360

DRAWN BY : CLG DATE : 3-13
CHECKED BY : TRL DATE : 3-13
DESIGN ENGINEER OF RECORD: K. BAILEY DATE : 5-13

5/29/2013 9:59:01 AM R:\ustation\Finals\(04) Location Sketch.dgn

TOTAL BILL OF MATERIAL

	4'-6" DIA. DRILLED PIER IN SOIL	4'-6" DIA. DRILLED PIER NOT IN SOIL	PERMANENT STEEL CASING FOR 4'-6" DIA. DRILLED PEIR	SID INSPECTIONS	CSL TESTING	REINFORCED CONCRETE DECK SLAB	GROOVING BRIDGE FLOORS	CLASS A CONCRETE	BRIDGE APPROACH SLABS, STA. 6+23.25 -RPCY4-	REINFORCING STEEL	SPIRAL COLUMN REINFORCING STEEL	MODIFIED 72" PRESTRESSED CONCRETE GIRDERS		HP12X53 STEEL PILES		CONCRETE BARRIER RAIL	RIP RAP CLASS II (2'-0" THICK)	GEOTEXTILE FOR DRAINAGE	ELASTOMERIC BEARINGS	EXPANSION JOINT SEALS	STRUCTURE DRAINAGE SYSTEM AT STA. 6+23.25 -RPCY4-
	LIN. FT.	LIN. FT.	LIN. FT.	EACH	EACH	SQ. FT.	SQ. FT.	CU. YDS.	LUMP SUM	LBS.	LBS.	NO.	LIN. FT.	NO.	LIN. FT.	LIN. FT.	TON	SQ. YDS.	LUMP SUM	LUMP SUM	LUMP SUM
SUPERSTRUCTURE						20,283.8	18,690		LUMP SUM			20	2,043.5			843.9			LUMP SUM	LUMP SUM	LUMP SUM
BENT 1	61.5	32.0						83.6		23,814	5,415										
BENT 2	56.8	31.0	40.0					91.5		24,083	5,067										
BENT 3	76.5	33.0	47.0					70.8		22,140	5,317										
BENT 4	52.5	30.0						80.4		21,907	4,182										
END BENT 2								59.7		8,408				9	315		640	710			
TOTAL BRIDGE	247.3	126.0	87.0	2	4	20,283.8	18,690	386.0	LUMP SUM	100,352	19,981	20	2,043.5	9	315	843.9	640	710	LUMP SUM	LUMP SUM	LUMP SUM

GENERAL NOTES

GENERAL NOTES:

ASSUMED LIVE LOAD = HL-93 OR ALTERNATE LOADING.

FOR OTHER DESIGN DATA AND GENERAL NOTES, SEE SHEET SN.

THIS BRIDGE HAS BEEN DESIGNED IN ACCORDANCE WITH THE AASHTO LRFD BRIDGE DESIGN SPECIFICATIONS.

THIS BRIDGE IS LOCATED IN SEISMIC ZONE 1.

THE CONTRACTOR SHALL PROVIDE INDEPENDENT ASSURANCE SAMPLES OF REINFORCING STEEL AS FOLLOWS: FOR PROJECTS REQUIRING UP TO 400 TONS OF REINFORCING STEEL, ONE 30" SAMPLE OF EACH SIZE BAR USED, AND FOR PROJECTS REQUIRING OVER 400 TONS OF REINFORCING STEEL, TWO 30" SAMPLES OF EACH SIZE BAR USED. THE BARS FROM WHICH THE SAMPLES ARE TAKEN MUST THEN BE SPLICED WITH REPLACEMENT BARS OF THE SIZE AND LENGTH OF THE SAMPLE, PLUS A MINIMUM LAP SPLICE OF THIRTY BAR DIAMETERS. ALL COSTS FOR PROVIDING REINFORCING STEEL SAMPLES SHALL BE CONSIDERED INCIDENTAL AND NO ADDITIONAL PAYMENT WILL BE MADE.

REMOVABLE FORMS MAY BE USED IN LIEU OF METAL STAY-IN-PLACE FORMS IN ACCORDANCE WITH ARTICLE 420-3 OF THE STANDARD SPECIFICATIONS.

NEEDLE BEAMS WILL NOT BE ALLOWED UNLESS OTHERWISE CALLED FOR ON THE PLANS OR APPROVED BY THE ENGINEER.

FOR EROSION CONTROL MEASURES, SEE EROSION CONTROL PLANS.

FOR CONSTRUCTION, MAINTENANCE AND REMOVAL OF TEMPORARY ACCESS, SEE LEFT LANE BRIDGE PLANS. NO ADDITIONAL MEASUREMENT OR PAYMENT WILL BE MADE FOR ACCESS TO THE RAMP BRIDGE.

FOR FALSEWORK AND FORMWORK, SEE SPECIAL PROVISIONS.

FOR SUBMITTAL OF WORKING DRAWINGS, SEE SPECIAL PROVISIONS.

FOR CRANE SAFETY, SEE SPECIAL PROVISIONS.

FOR GROUT FOR STRUCTURES, SEE SPECIAL PROVISIONS.

THE CLASS AA CONCRETE IN THE BRIDGE DECK SHALL CONTAIN FLY ASH OR GROUND GRANULATED BLAST FURNACE SLAG AT THE SUBSTITUTION RATE SPECIFIED IN ARTICLE 1024-1 AND IN ACCORDANCE WITH ARTICLES 1024-5 AND 1024-6 OF THE STANDARD SPECIFICATIONS. NO PAYMENT WILL BE MADE FOR THIS SUBSTITUTION AS IT IS CONSIDERED INCIDENTIAL TO THE COST OF THE REINFORCED CONCRETE DECK SLAB.

FOR BRIDGE DECK RIDEABILITY AND GROOVING AT STATION 6+23.25 -RPCY4- SEE SPECIAL PROVISIONS.

FOR PLACING LOAD ON STRUCTURAL MEMBERS, SEE SPECIAL PROVISIONS.

THE LOCATION OF THE CONSTRUCTION JOINT IN THE DRILLED PIERS IS BASED ON AN APPROXIMATE GROUND LINE ELEVATION. IF THE CONSTRUCTION JOINT IS ABOVE THE ACTUAL GROUND ELEVATION, THE CONTRACTOR SHALL PLACE THE CONSTRUCTION JOINT 1 FOOT BELOW THE GROUND LINE.

FOUNDATION NOTES:

FOR PILES, SEE SECTION 450 OF THE STANDARD SPECIFICATIONS.

PILES AT END BENT NO. 2 ARE DESIGNED FOR A FACTORED RESISTANCE OF 125 TONS PER PILE.

DRIVE PILES AT END BENT NO. 2 TO A REQUIRED DRIVING RESISTANCE OF 210 TONS PER PILE.

OBSERVE A ONE MONTH WAITING PERIOD AFTER CONSTRUCTING THE EMBANKMENT TO WITHIN 2 FT OF FINISHED GRADE BEFORE BEGINNING END BENT CONSTRUCTION AT END BENT NO. 2.

FOR DRILLED PIERS, SEE SECTION 411 OF THE STANDARD SPECIFICATIONS.

SID INSPECTIONS MAY BE REQUIRED FOR DRILLED PIERS. THE ENGINEER WILL DETERMINE THE NEED FOR SID INSPECTIONS. FOR SID INSPECTIONS, SEE SECTION 411 OF THE STANDARD SPECIFICATIONS.

CSL TUBES ARE REQUIRED AND CSL TESTING MAY BE REQUIRED FOR DRILLED PIERS. THE ENGINEER WILL DETERMINE THE NEED FOR CSL TESTING. FOR CSL TESTING, SEE SECTION 411 OF THE STANDARD SPECIFICATIONS.

DRILLED PIERS AT BENT NO. 1 THROUGH BENT NO. 4 ARE DESIGNED FOR A FACTORED RESISTANCE OF 775 TONS, 675 TONS, 685 TONS AND 680 TONS PER PIER, RESPECTIVELY. CHECK FIELD CONDITIONS FOR THE REQUIRED TIP RESISTANCE OF 40.0 TSF.

PERMANENT STEEL CASINGS MAY BE REQUIRED FOR DRILLED PIERS AT BENT NO. 2. IF REQUIRED, DO NOT EXTEND PERMANENT CASINGS BELOW 735 FT WITHOUT PRIOR APPROVAL FROM THE ENGINEER. THE ENGINEER WILL DETERMINE THE NEED FOR PERMANENT CASINGS.

PERMANENT STEEL CASINGS MAY BE REQUIRED FOR DRILLED PIERS AT BENT NO. 3. IF REQUIRED, DO NOT EXTEND PERMANENT CASINGS BELOW 733 FT WITHOUT PRIOR APPROVAL FROM THE ENGINEER. THE ENGINEER WILL DETERMINE THE NEED FOR PERMANENT CASINGS.

INSTALL DRILLED PIERS AT BENT NO. 1 TO A TIP ELEVATION NO HIGHER THAN 717 FT WITH THE REQUIRED TIP RESISTANCE.

INSTALL DRILLED PIERS AT BENT NO. 2 TO A TIP ELEVATION NO HIGHER THAN 722 FT (LT) AND 716 FT (CT, RT) AND WITH THE REQUIRED TIP RESISTANCE.

INSTALL DRILLED PIERS AT BENT NO. 3 TO A TIP ELEVATION NO HIGHER THAN 713 FT (LT) AND 710 FT (CT, RT) AND WITH THE REQUIRED TIP RESISTANCE.

INSTALL DRILLED PIERS AT BENT NO. 4 TO A TIP ELEVATION NO HIGHER THAN 717 FT (LT, CT) AND 726 FT (RT) WITH THE REQUIRED TIP RESISTANCE.

PROJECT NO. U-2524C

GUILFORD COUNTY

STATION: POT 6+23.25 -RPCY4-

SHEET 5 OF 5

STATE OF NORTH CAROLINA
DEPARTMENT OF TRANSPORTATION
RALEIGH

GENERAL DRAWING
BRIDGE ON RAMP C
OVER WETLANDS

-RAMP C-

NORTH CAROLINA PROFESSIONAL SEAL 18165 ENGINEER MARK F. ROBBINS
6-11-13

NORTH CAROLINA PROFESSIONAL SEAL 28479 ENGINEER KEVIN G. BAILEY
6-11-13

STV / Ralph Whitehead Associates, Inc.
1000 West Morehead St., Ste. 200
Charlotte, NC 28208
NC License No. F-0991

REVISIONS						SHEET NO.
NO.	BY:	DATE:	NO.	BY:	DATE:	S-633
1			3			TOTAL SHEETS
2			4			636

DRAWN BY : CLG DATE : 3-13
CHECKED BY : TRL DATE : 3-13

DESIGN ENGINEER OF RECORD: K. BAILEY DATE : 5-13

6/11/2013 1:26:45 PM R:\station\Finals\105 Gen Dwg TotalBOM.dgn

LOAD AND RESISTANCE FACTOR RATING (LRFR) SUMMARY FOR PRESTRESSED CONCRETE GIRDERS

LEVEL		VEHICLE	WEIGHT (W) (TONS)	(#) CONTROLLING LOAD RATING	MINIMUM RATING FACTORS (RF)	TONS = W x RF	STRENGTH I LIMIT STATE										SERVICE III LIMIT STATE						COMMENT NUMBER
								MOMENT					SHEAR					MOMENT						
							LIVE-LOAD FACTORS (γ_{LL})	DISTRIBUTION FACTORS (DF)	RATING FACTOR	SPAN	GIRDER LOCATION	DISTANCE FROM LEFT END OF SPAN (ft)	DISTRIBUTION FACTORS (DF)	RATING FACTOR	SPAN	GIRDER LOCATION	DISTANCE FROM LEFT END OF SPAN (ft)	LIVE-LOAD FACTORS (γ_{LL})	DISTRIBUTION FACTORS (DF)	RATING FACTOR	SPAN	GIRDER LOCATION	DISTANCE FROM LEFT END OF SPAN (ft)	
DESIGN LOAD RATING		HL-93 (INVENTORY)	N/A	1	1.21	--	1.75	0.89	1.23	1,2,3	ER	53.6	0.98	1.44	1,2,3	I	31.9	0.80	0.89	1.21	1,2,3	ER	53.6	
		HL-93 (OPERATING)	N/A		1.59	--	1.35	0.89	1.59	1,2,3	ER	53.6	0.98	2.08	1,2,3	I	86.2	N/A	--	--	--	--	--	
		HS-20 (INVENTORY)	36	2	1.72	61.92	1.75	0.89	1.72	4	ER	40.6	0.98	2.15	1,2,3	I	86.2	0.80	0.89	1.72	1,2,3	ER	53.6	
		HS-20 (OPERATING)	36		2.24	80.64	1.35	0.89	2.24	4	ER	40.6	0.98	2.83	1,2,3	I	86.2	N/A	--	--	--	--	--	
LEGAL LOAD RATING	SINGLE VEHICLE (SV)	SH	12.5		4.49	56.13	1.40	0.89	5.41	4	ER	40.6	0.98	7.98	1,2,3	I	86.2	0.80	0.89	4.49	1,2,3	ER	53.6	
		S3A	22.75		2.48	56.42	1.40	0.89	3.00	4	ER	40.6	0.98	4.31	1,2,3	I	86.2	0.80	0.89	2.48	1,2,3	ER	53.6	
		S3C	21.5		2.62	56.33	1.40	0.89	3.17	4	ER	40.6	0.98	4.55	1,2,3	I	86.2	0.80	0.89	2.62	1,2,3	ER	53.6	
		S4A	26.75		2.17	58.05	1.40	0.89	2.65	4	ER	40.6	0.98	3.54	1,2,3	I	86.2	0.80	0.89	2.17	1,2,3	ER	53.6	
		S5A	30.5		1.91	58.26	1.40	0.89	2.34	4	ER	40.6	0.98	3.12	1,2,3	I	86.2	0.80	0.89	1.91	1,2,3	ER	53.6	
		S6A	34.5		1.72	59.34	1.40	0.89	2.12	4	ER	40.6	0.98	2.87	1,2,3	I	86.2	0.80	0.89	1.72	1,2,3	ER	53.6	
		S7A	40	3	1.54	61.60	1.40	0.89	1.91	4	ER	40.6	0.98	2.62	1,2,3	I	86.2	0.80	0.89	1.54	1,2,3	ER	53.6	
		S7B	38.5		1.56	60.06	1.40	0.89	1.93	4	ER	40.6	0.98	2.62	1,2,3	I	86.2	0.80	0.89	1.56	1,2,3	ER	53.6	
	TRUCK TRACTOR SEMI-TRAILER (TTST)	T4A	28.25		2.12	59.89	1.40	0.89	2.61	4	ER	40.6	0.98	3.61	1,2,3	I	86.2	0.80	0.89	2.12	1,2,3	ER	53.6	
		T5B	32		1.86	59.52	1.40	0.89	2.30	4	ER	40.6	0.98	3.24	1,2,3	I	86.2	0.80	0.89	1.86	1,2,3	ER	53.6	
		T6A	36		1.70	61.20	1.40	0.89	2.11	4	ER	40.6	0.98	2.83	1,2,3	I	86.2	0.80	0.89	1.70	1,2,3	ER	53.6	
		T7A	40		1.56	62.40	1.40	0.89	1.96	4	ER	40.6	0.98	2.61	1,2,3	I	86.2	0.80	0.89	1.56	1,2,3	ER	53.6	
		T7B	40		1.64	65.60	1.40	0.89	2.08	1,2,3	ER	53.6	0.98	2.47	1,2,3	I	86.2	0.80	0.89	1.64	1,2,3	ER	53.6	

LOAD FACTORS:

DESIGN LOAD RATING FACTORS	LIMIT STATE	γ_{DC}	γ_{DW}
	STRENGTH I	1.25	1.50
	SERVICE III	1.00	1.00

NOTES:

1. MINIMUM RATING FACTORS ARE BASED ON THE STRENGTH I AND SERVICE III LIMIT STATES.
2. ALLOWABLE STRESSES FOR SERVICE III LIMIT STATE ARE AS REQUIRED FOR DESIGN.

(#) CONTROLLING LOAD RATING

(1) DESIGN LOAD RATING (HL-93)

(2) DESIGN LOAD RATING (HS-20)

(3) LEGAL LOAD RATING **

** SEE CHART FOR VEHICLE TYPE

GIRDER LOCATION

I - INTERIOR GIRDER
EL - EXTERIOR LEFT GIRDER
ER - EXTERIOR RIGHT GIRDER

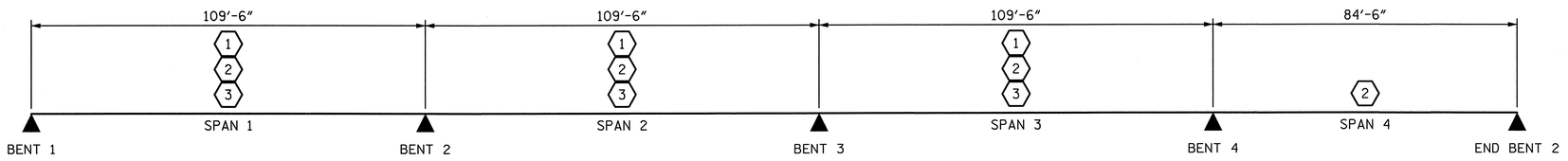

LRFR SUMMARY

(SPAN LENGTHS ARE ALONG SURVEY -RPCY4-)

PROJECT NO. U-2524C

GUILFORD COUNTY

STATION: POT 6+23.25 -RPCY4-

STATE OF NORTH CAROLINA
DEPARTMENT OF TRANSPORTATION
RALEIGH

LRFR SUMMARY FOR 72" PRESTRESSED CONCRETE MODIFIED BULB TEE

(INTERSTATE TRAFFIC)
-RAMP C-

NORTH CAROLINA PROFESSIONAL SEAL 28479 ENGINEER KEVIN G. BAILEY 5-30-13

DRAWN BY : YT	DATE : 11-12	DESIGN ENGINEER OF RECORD: T. TOWNSEND	DATE : 5-13
CHECKED BY : PLF	DATE : 11-12		

STV / Ralph Whitehead Associates, Inc.
1000 West Morehead St., Ste. 200
Charlotte, NC 28208
NC License No. F-0991

REVISIONS						SHEET NO.
NO.	BY:	DATE:	NO.	BY:	DATE:	S-634
1			3			TOTAL SHEETS
2			4			834

5/29/2013 9:59:06 AM R:\ustation\Finals\V06\MBT 72 LRFR.dgn

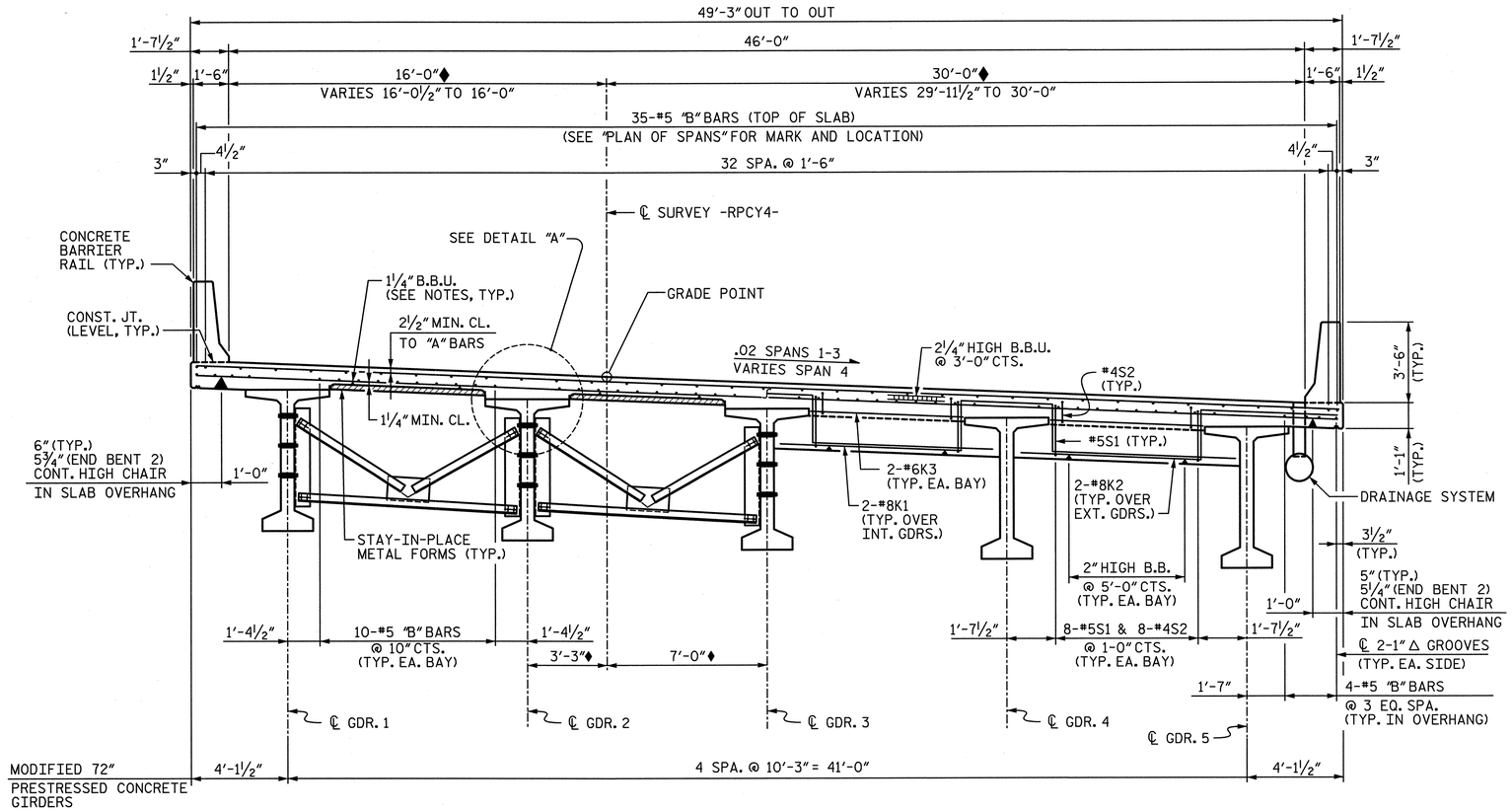

♦ TO ℄ SURVEY -RPCY4- OR EXTENDED TANGENT

NOTES:

1. PROVIDE A 1¼" HIGH BEAM BOLSTER UPPER AT 4'-0" CTS. ATOP THE METAL STAY-IN-PLACE FORMS TO SUPPORT THE BOTTOM MAT OF "A" BARS.
2. LONGITUDINAL STEEL MAY BE SHIFTED SLIGHTLY, AS NECESSARY, TO AVOID INTERFERENCE WITH STIRRUPS IN PRESTRESSED CONCRETE GIRDERS.
3. BARRIER RAIL SHALL NOT BE CAST UNTIL ALL SLAB CONCRETE HAS BEEN CAST AND HAS REACHED A MINIMUM COMPRESSIVE STRENGTH OF 3000 PSI.
4. PREVIOUSLY CAST CONCRETE IN A CONTINUOUS UNIT SHALL HAVE ATTAINED A MINIMUM COMPRESSIVE STRENGTH OF 3000 PSI BEFORE ADDITIONAL CONCRETE IS CAST IN THE UNIT.
5. FOR INTERMEDIATE DIAPHRAGM DETAILS, SEE "INTERMEDIATE STEEL DIAPHRAGMS FOR 72" MODIFIED BULB TEE PRESTRESSED CONCRETE GIRDERS" SHEET.
6. FOR END DIAPHRAGM AND CONTINUOUS DIAPHRAGM SECTIONS, SEE "SUPERSTRUCTURE DETAILS" SHEETS.
7. FOR BARRIER RAIL DETAILS, SEE CONCRETE BARRIER RAIL SHEETS.
8. FOR "B" BAR MARKS AND LOCATIONS, SEE CORRESPONDING "PLAN OF SPANS" SHEET.
9. FOR DRAINAGE SYSTEM, SEE "STRUCTURE DRAINAGE SYSTEM DETAILS" SHEETS.
10. HEIGHT OF BEAM BOLSTER & CONTINUOUS HIGH CHAIR IS CALCULATED @ ℄ BENT. CONTRACTOR SHALL ADJUST HEIGHTS, AS NECESSARY TO MAINTAIN PROPER CLEARANCE, DUE TO GIRDER CAMBER OR SUPERELEVATION CHANGE.
11. SHIFT "B" BARS SLIGHTLY, AS NECESSARY, TO CLEAR DECK DRAINS.

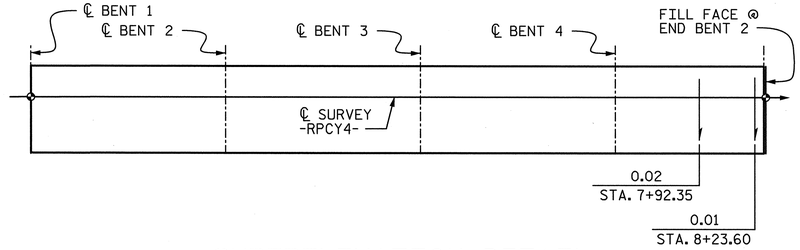

INTERMEDIATE DIAPHRAGMS

END DIAPHRAGM

(BENT 1 SHOWN, END BENT 2 SIMILAR)

TYPICAL SECTION

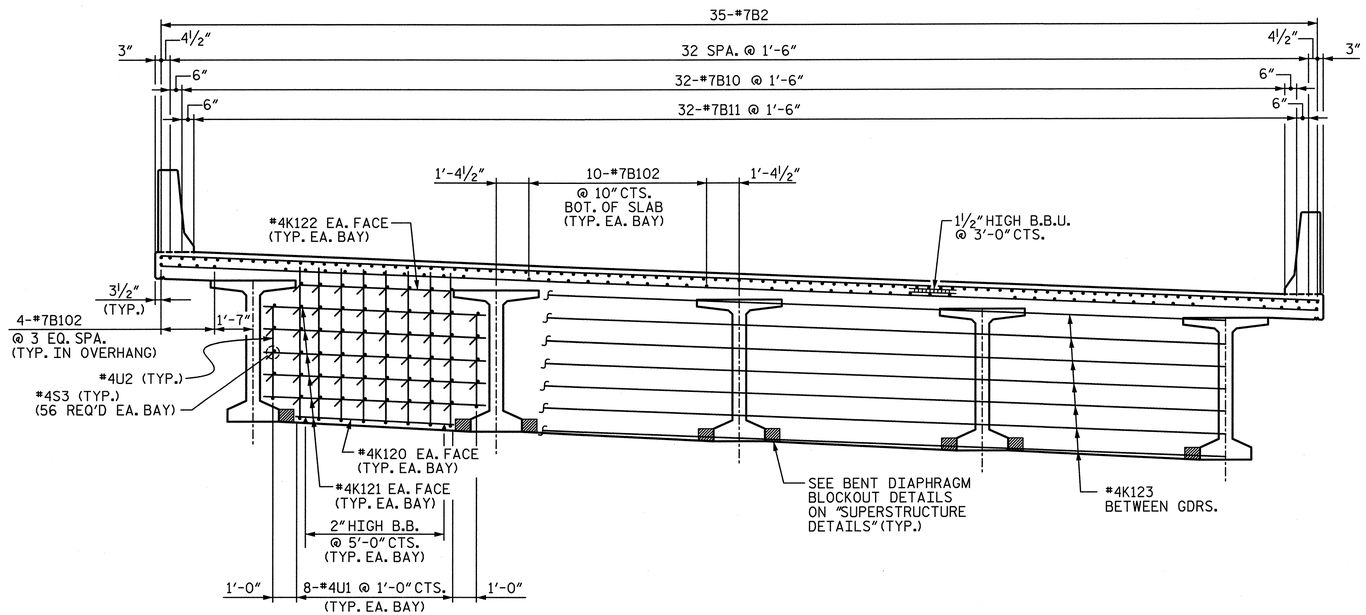

CONTINUOUS DIAPHRAGMS

(FOR "B" BARS PLACEMENT, SEE PLAN OF SPANS)

SUPERELEVATION DETAIL

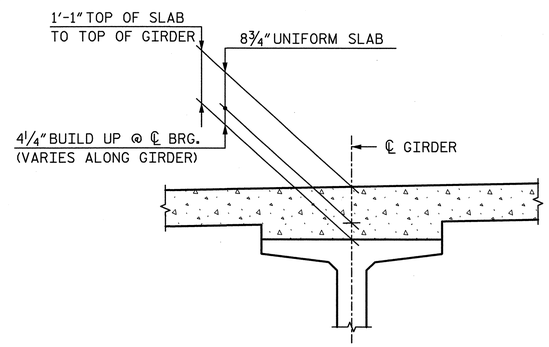

DETAIL "A"

PROJECT NO. U-2524C

GUILFORD COUNTY

STATION: POT 6+23.25 -RPCY4-

STATE OF NORTH CAROLINA
DEPARTMENT OF TRANSPORTATION
RALEIGH

TYPICAL SECTION SPANS 1-4

-RAMP C-

NORTH CAROLINA PROFESSIONAL ENGINEER SEAL 28479 KEVIN G. BAILEY 5-30-13

DRAWN BY : MM	DATE : 11-12	DESIGN ENGINEER OF RECORD: A. PETER	DATE : 5-13
CHECKED BY : YT	DATE : 11-12		

STV / Ralph Whitehead Associates, Inc.
1000 West Morehead St., Ste. 200
Charlotte, NC 28208
NC License No. F-0991

REVISIONS						SHEET NO.
NO.	BY:	DATE:	NO.	BY:	DATE:	S-635
1			3			TOTAL SHEETS
2			4			83

5/29/2013 9:59:08 AM R:\station\Finals\(07) Typ Sect. Ramp C.dgn

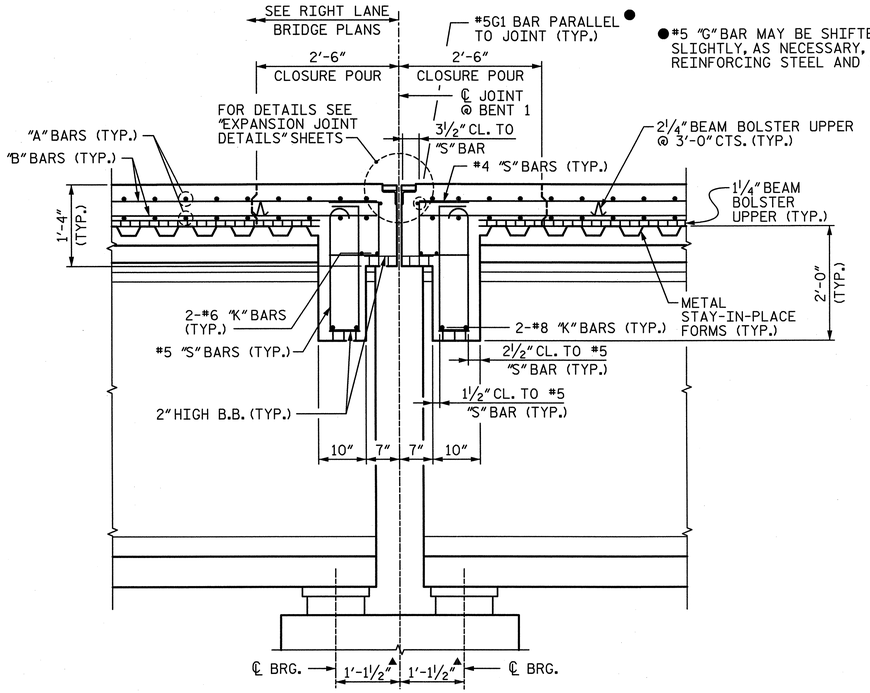

SECTION A-A

END DIAPHRAGM AT EXPANSION BENT 1
("J" BAR USED WITH STANDARD EXP. JT. NOT SHOWN)

● #5 "G" BAR MAY BE SHIFTED SLIGHTLY, AS NECESSARY, TO CLEAR REINFORCING STEEL AND STIRRUPS

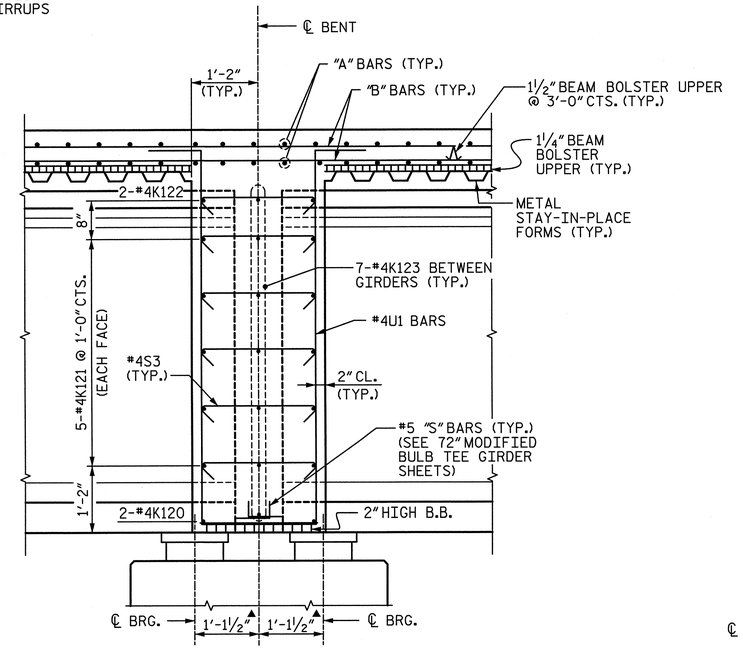

SECTION B-B

CONT. DIAPHRAGMS AT BENTS 2, 3 & 4

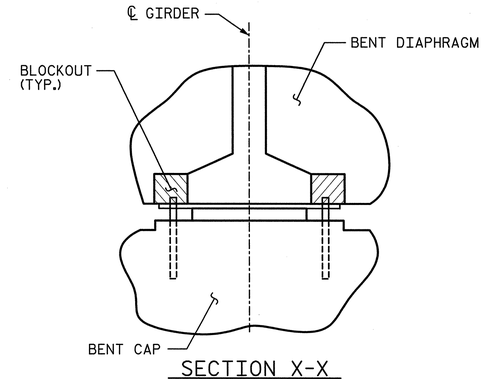

SECTION X-X

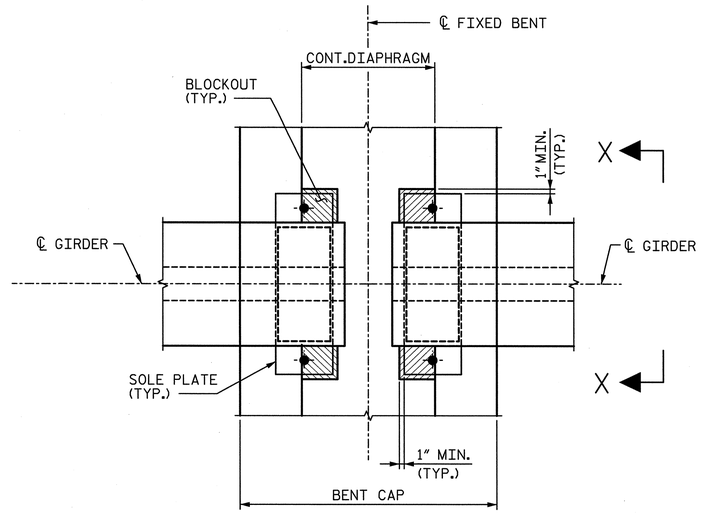

PLAN

CONT. DIAPHRAGM BLOCKOUT DETAILS

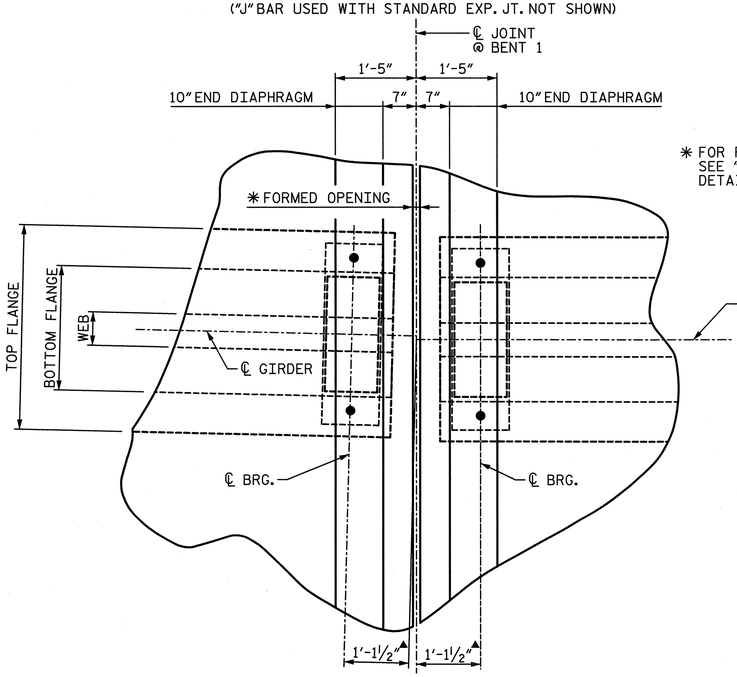

PLAN

(BENT CAP NOT SHOWN FOR CLARITY)

✳ FOR FORMED OPENING DIMENSION, SEE "EXPANSION JOINT SEAL DETAILS" SHEETS

▲ DIMENSIONS ARE MEASURED ALONG ℄ GIRDER.

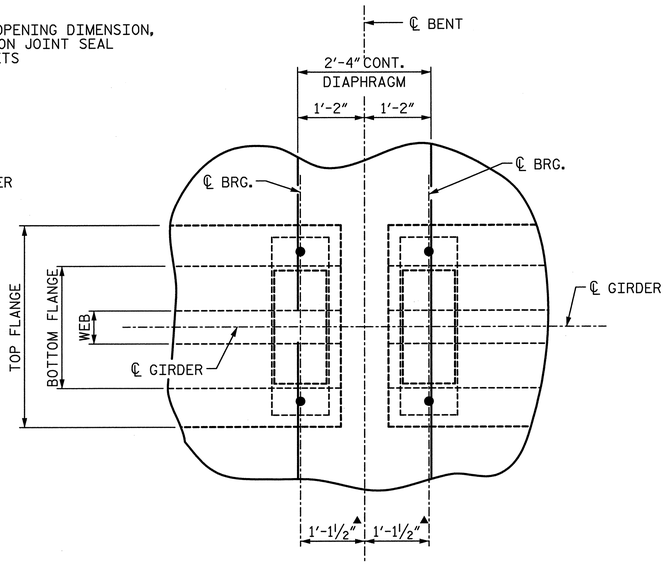

PLAN

(BENT CAP NOT SHOWN FOR CLARITY)

PROJECT NO. U-2524C

GUILFORD COUNTY

STATION: POT 6+23.25 -RPCY4-

SHEET 1 OF 2

STATE OF NORTH CAROLINA
DEPARTMENT OF TRANSPORTATION
RALEIGH

SUPERSTRUCTURE DETAILS

-RAMP C-

NORTH CAROLINA PROFESSIONAL SEAL 28479 ENGINEER KEVIN G. BAILEY 5-30-13

STV / Ralph Whitehead Associates, Inc.
1000 West Morehead St., Ste. 200
Charlotte, NC 28208
NC License No. F-0991

REVISIONS						SHEET NO.
NO.	BY:	DATE:	NO.	BY:	DATE:	S-636
1			3			TOTAL SHEETS
2			4			836

DRAWN BY : MM DATE : 11-12
CHECKED BY : YT DATE : 11-12
DESIGN ENGINEER OF RECORD: A. PETER DATE : 5-13

5/29/2013 9:59:11 AM R:\ustation\FInals\108) Sup. Sect. Details Sheet 1of 2.dgn

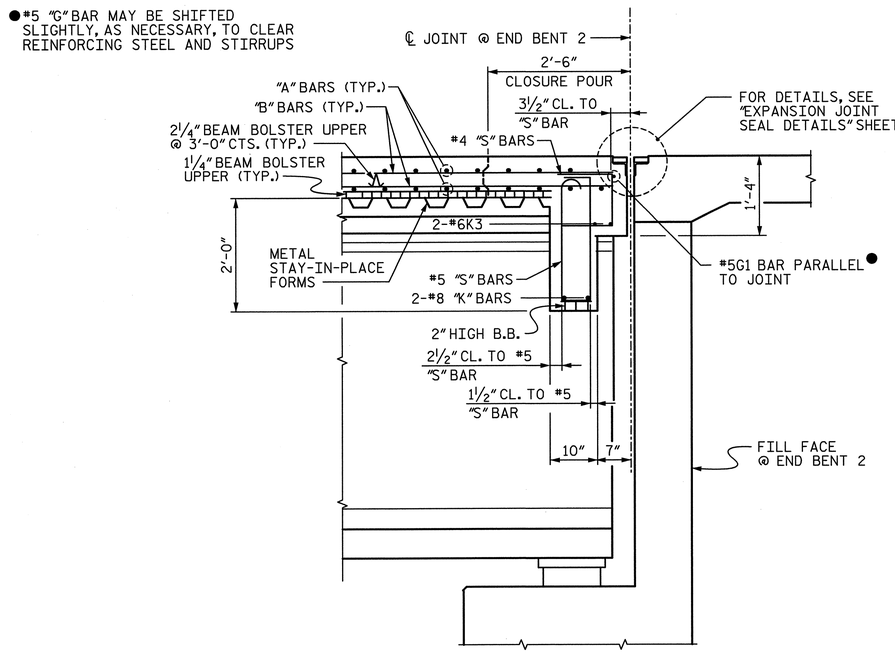

SECTION C-C

END DIAPHRAGM AT END BENT 2
("J" BARS USED WITH STANDARD EXP. JT. NOT SHOWN)

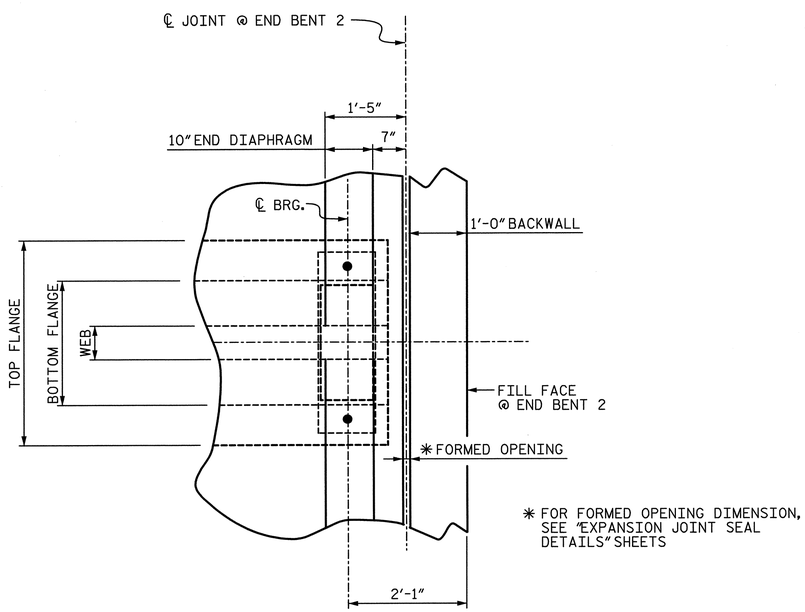

PLAN

(BENT CAP NOT SHOWN FOR CLARITY)

✱ FOR FORMED OPENING DIMENSION, SEE "EXPANSION JOINT SEAL DETAILS" SHEETS

NORTH CAROLINA PROFESSIONAL SEAL 28479 ENGINEER KEVIN G. BAILEY 5-30-13

PROJECT NO. U-2524C

GUILFORD COUNTY

STATION: POT 6+23.25 -RPCY4-

SHEET 2 OF 2

STATE OF NORTH CAROLINA
DEPARTMENT OF TRANSPORTATION
RALEIGH

SUPERSTRUCTURE DETAILS

-RAMP C-

REVISIONS						SHEET NO.
NO.	BY:	DATE:	NO.	BY:	DATE:	S-637
1			3			TOTAL SHEETS
2			4			836

STV / Ralph Whitehead Associates, Inc.
1000 West Morehead St., Ste. 200
Charlotte, NC 28208
NC License No. F-0991

DRAWN BY : MM DATE : 11-12
CHECKED BY : YT DATE : 11-12
DESIGN ENGINEER OF RECORD: A. PETER DATE : 5-13

5/29/2013 9:59:13 AM R:\station\Finals\(09) Sup. Sect. Details Sheet 2 of 2.dgn

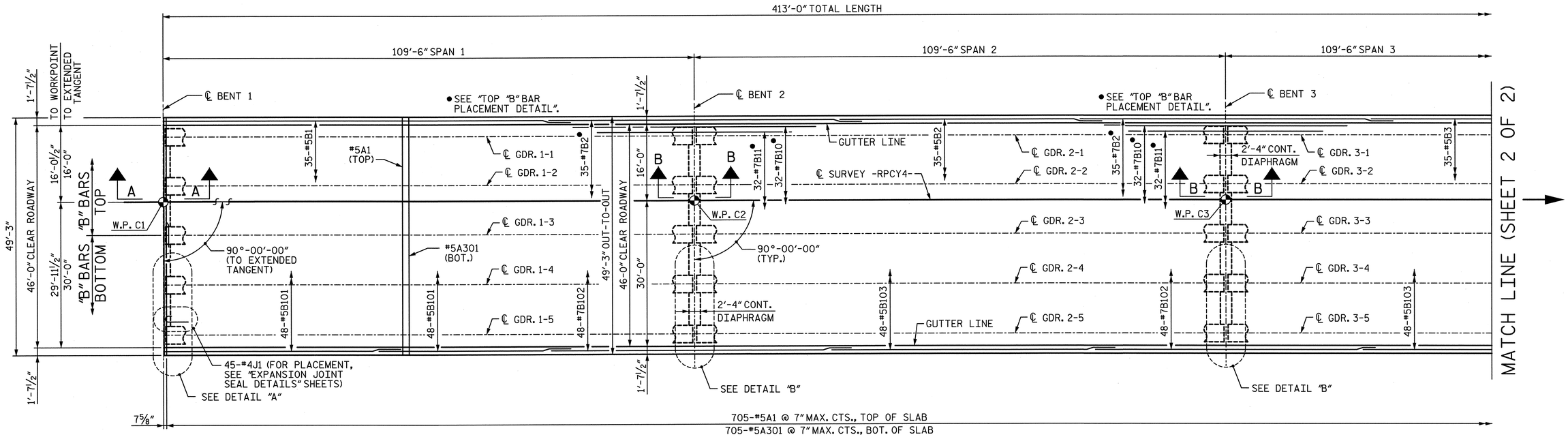

PLAN OF SPANS

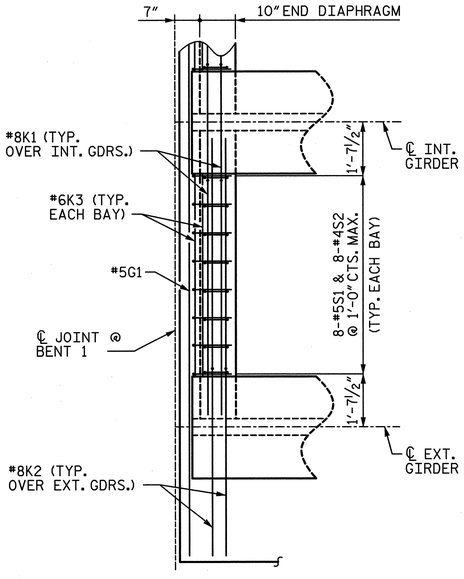

DETAIL "A"

END DIAPHRAGM AT EXP. BENT 1

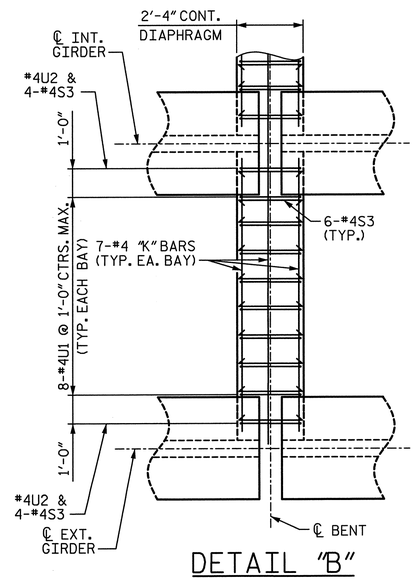

DETAIL "B"

CONTINUOUS DIAPHRAGM AT BENTS 2, 3 & 4

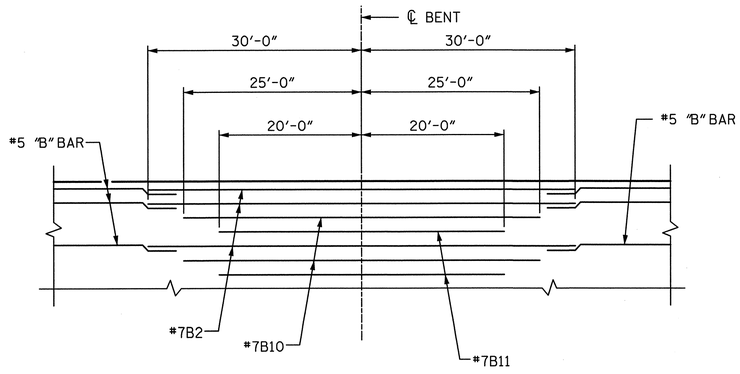

TOP "B" BAR PLACEMENT DETAIL

NOTES:

1. FOR CONCRETE BARRIER RAIL DIMENSIONS, REINFORCEMENT AND JOINT SPACING, SEE CONCRETE BARRIER RAIL SHEETS.
2. FOR POURING SEQUENCE AND TRANSVERSE CONSTRUCTION JOINT IN DECK SLAB, SEE "SUPERSTRUCTURE BILL OF MATERIAL" SHEET.
3. FOR SECTION VIEWS, SEE "SUPERSTRUCTURE DETAILS" SHEETS.
4. FOR SPACING OF TOP AND BOTTOM "B" BARS, SEE "TYPICAL SECTION, SPANS 1-4" SHEET.
5. FOR DRAINAGE SYSTEM, SEE "STRUCTURE DRAINAGE SYSTEM DETAILS" SHEETS.
6. FOR MINIMUM SPLICE LENGTHS, SEE "SUPERSTRUCTURE BILL OF MATERIAL" SHEET.

PROJECT NO. U-2524C

GUILFORD COUNTY

STATION: POT 6+23.25 -RPCY4-

SHEET 1 OF 2

STATE OF NORTH CAROLINA
DEPARTMENT OF TRANSPORTATION
RALEIGH

PLAN OF SPANS
SPANS 1-3

-RAMP C-

NORTH CAROLINA PROFESSIONAL ENGINEER SEAL 28479 KEVIN G. BAILEY
5-30-13

DRAWN BY : MM DATE : 11-12
CHECKED BY : YT DATE : 11-12
DESIGN ENGINEER OF RECORD: A. PETER DATE : 5-13

STV / Ralph Whitehead Associates, Inc.
1000 West Morehead St., Ste. 200
Charlotte, NC 28208
NC License No. F-0991

REVISIONS						SHEET NO.
NO.	BY:	DATE:	NO.	BY:	DATE:	S-638
1			3			TOTAL SHEETS
2			4			836

5/29/2013 9:59:15 AM R:\station\Finals\(10) Plan of Spans_RampC_Sheet 1of 2.dgn

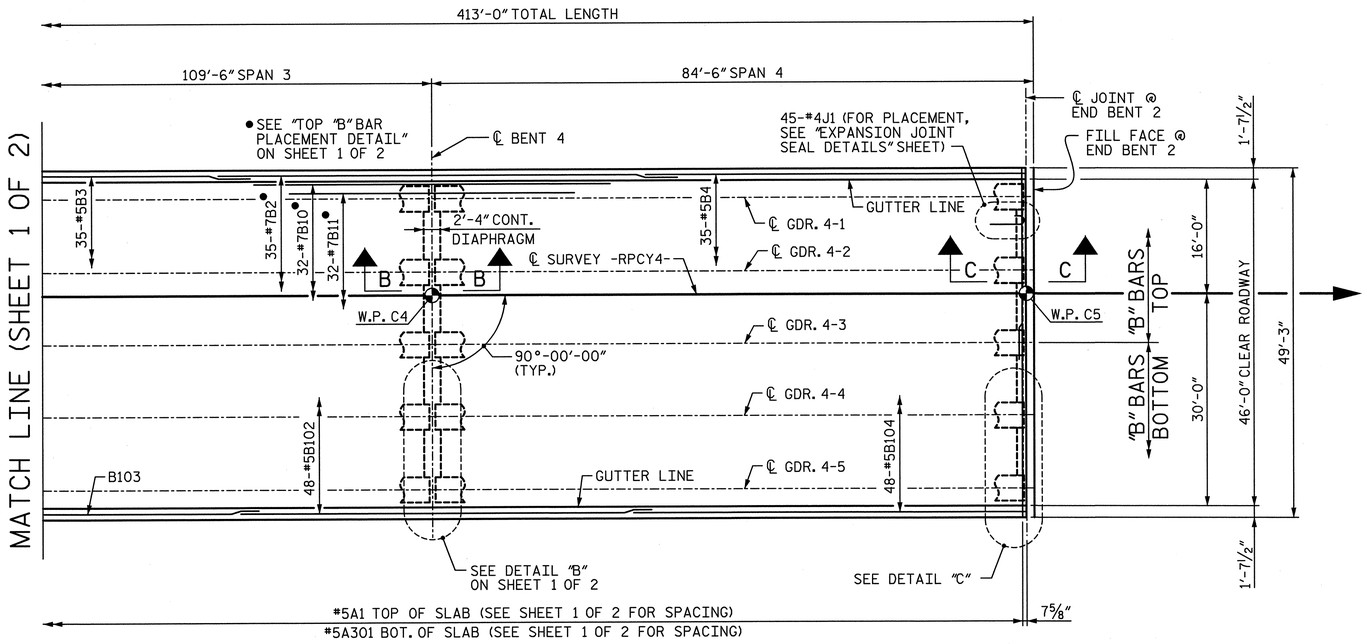

PLAN OF SPANS

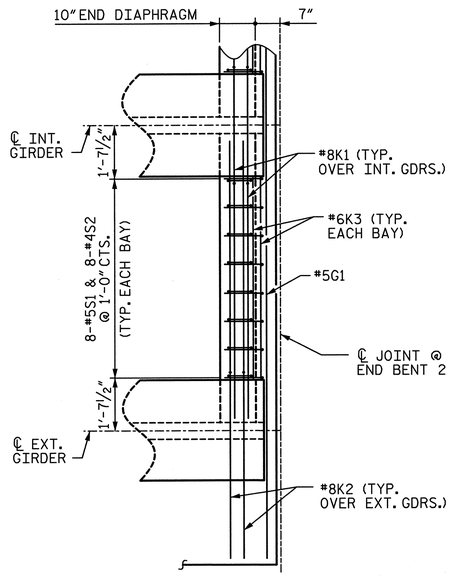

DETAIL "C"

END DIAPHRAGM AT EXP. END BENT 2

NOTES:

1. SEE SHEET 1 OF 2 FOR NOTES.

PROJECT NO. U-2524C

GUILFORD COUNTY

STATION: POT 6+23.25 -RPCY4-

SHEET 2 OF 2

STATE OF NORTH CAROLINA
DEPARTMENT OF TRANSPORTATION
RALEIGH

PLAN OF SPANS
SPANS 3-4

-RAMP C-

NORTH CAROLINA PROFESSIONAL SEAL 28479 ENGINEER KEVIN G. BAILEY
5-30-13

REVISIONS						SHEET NO.
NO.	BY:	DATE:	NO.	BY:	DATE:	S-639
1			3			TOTAL SHEETS
2			4			830

STV / Ralph Whitehead Associates, Inc.
1000 West Morehead St., Ste. 200
Charlotte, NC 28208
NC License No. F-0991

DRAWN BY : MM	DATE : 11-12	DESIGN ENGINEER OF RECORD: A. PETER	DATE : 5-13
CHECKED BY : YT	DATE : 11-12		

5/29/2013 9:59:17 AM R:\ustation\Finals\(II) Plan of Spans_RampC_Sheet 2 of 2.dgn

NOTES:

1. FOR COLLECTOR PIPE SUPPORTS, SEE SHEET 2 OF 4.
2. FOR ADDITIONAL NOTES, SEE SHEET 4 OF 4.

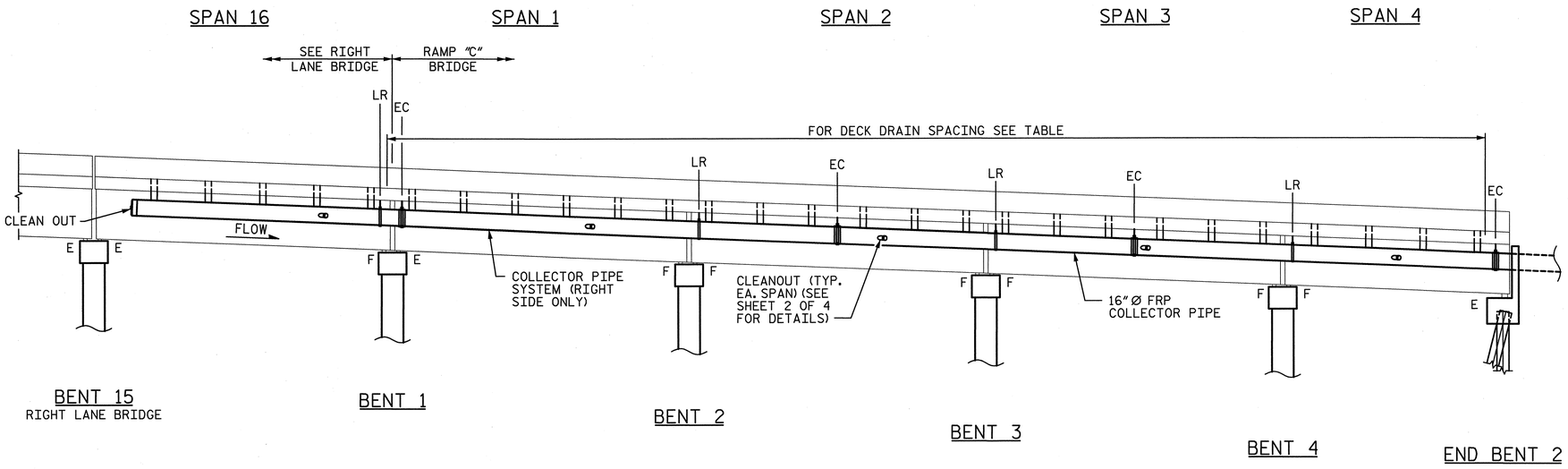

ELEVATION

EC = EXPANSION COUPLER (SEE SHEET 2 OF 4 FOR DETAILS)
LR = LONGITUDINAL RESTRAINT (SEE SHEET 2 OF 4 FOR DETAILS)

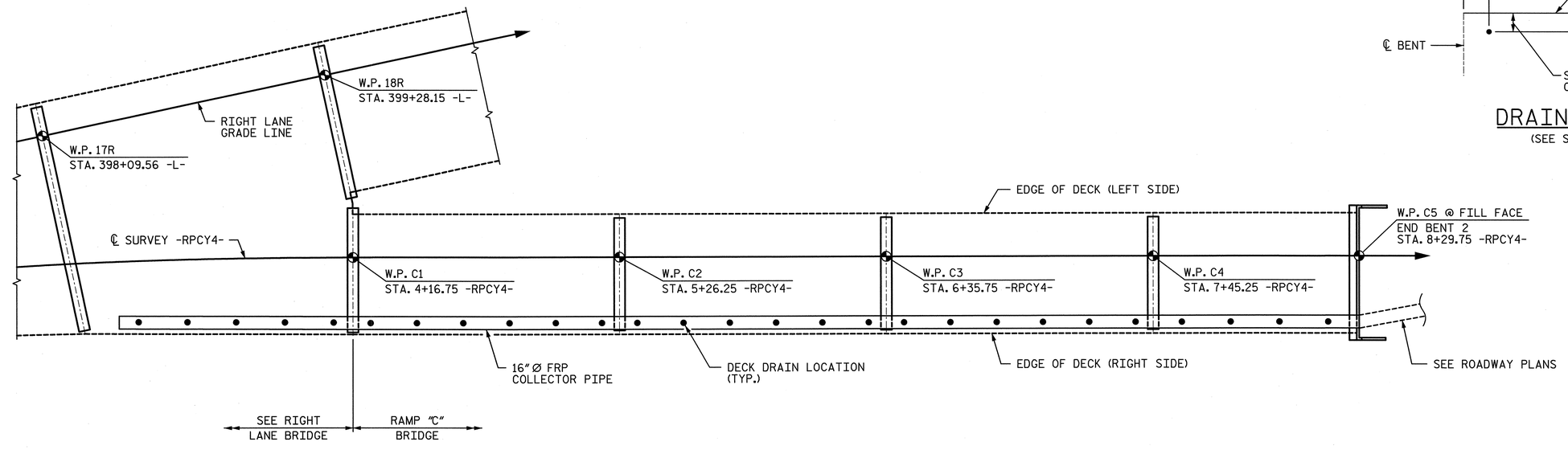

PLAN

(GIRDERS NOT SHOWN FOR CLARITY)

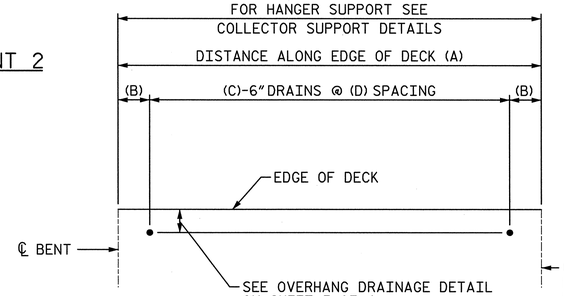

DRAIN LAYOUT DETAIL

(SEE SHEET 2 OF 4 FOR DETAILS)

DECK DRAIN SPACING TABLE				
SPAN	A (FT.)	B (FT.)	C	D (FT.)
1	109.5	7.25	6	19.00
2	109.5	7.25	6	19.00
3	109.5	7.25	6	19.00
4	83.5	11.75	4	20.00

PROJECT NO. U-2524C

GUILFORD COUNTY

STATION: POT 6+23.25 -RPCY4-

SHEET 1 OF 4

STATE OF NORTH CAROLINA
DEPARTMENT OF TRANSPORTATION
RALEIGH

STRUCTURE DRAINAGE SYSTEM DETAILS

-RAMP C-

NORTH CAROLINA PROFESSIONAL SEAL 28479 ENGINEER KEVIN G. BAILEY
5-30-13

STV / Ralph Whitehead Associates, Inc.
1000 West Morehead St., Ste. 200
Charlotte, NC 28208
NC License No. F-0991

REVISIONS						SHEET NO.
NO.	BY:	DATE:	NO.	BY:	DATE:	S-640
1			3			TOTAL SHEETS
2			4			836

DRAWN BY : CLG DATE : 2-13
CHECKED BY : TJT DATE : 3-13
DESIGN ENGINEER OF RECORD: T. TOWNSEND DATE : 5-13

5/30/2013 9:40:04 AM R:\station\Finals\(2) Closed Drainage System Sheet 1of 4.dgn

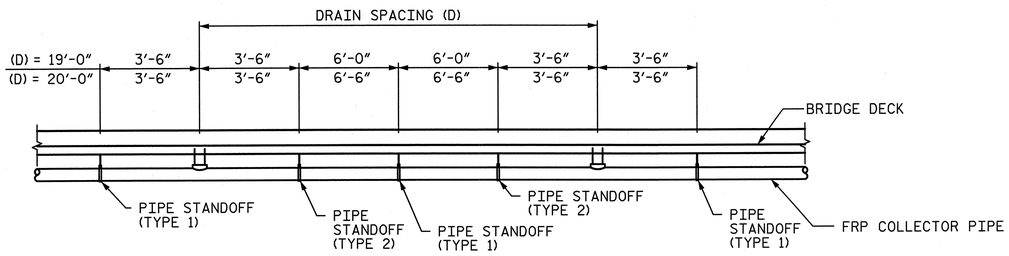

DETAIL "A"
(BETWEEN DECK DRAINS)

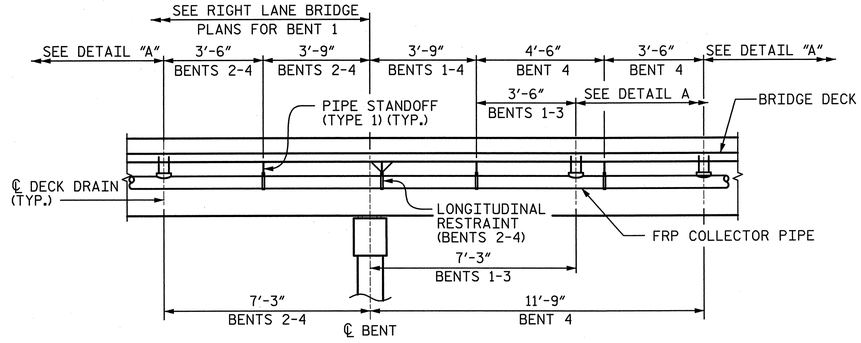

DETAIL "B"
(AT INTERIOR BENTS)

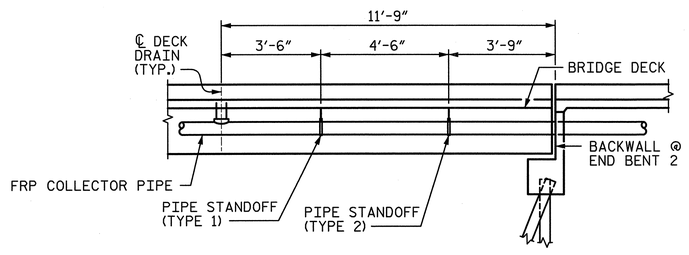

DETAIL "C"
(AT END BENT 2)

COLLECTOR SUPPORT DETAILS
(COUPLERS NOT SHOWN FOR CLARITY)

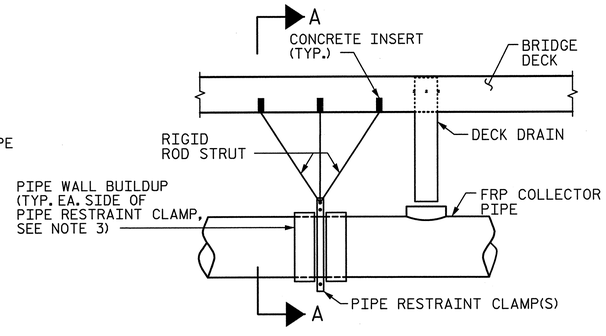

ELVEVATION VIEW

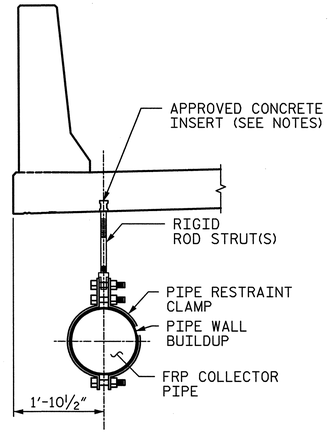

SECTION A-A

LONGITUDINAL RESTRAINT DETAIL

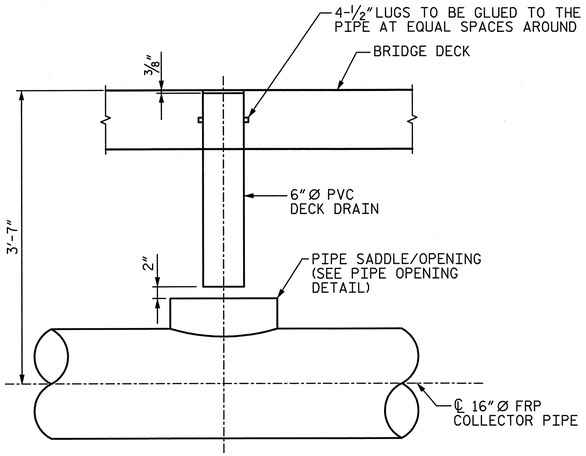

DRAIN OUTLET & PIPE CONNECTION

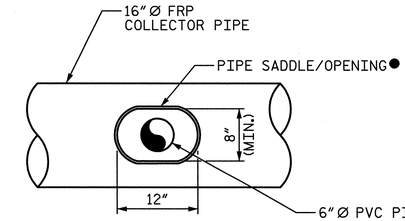

PIPE OPENING DETAIL

● FABRICATOR SHALL DETERMINE PIPE SADDLE/REINFORCEMENT FOR OPENING SIZE INDICATED. FABRICATOR SHALL SUBMIT SHOP DRAWINGS OF PIPE SADDLE/OPENING FOR REVIEW PRIOR TO BEGINNING FABRICATION.

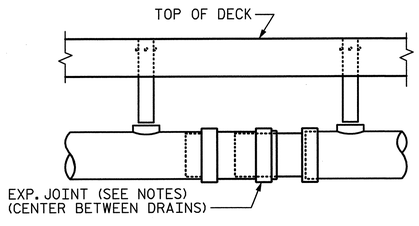

EXPANSION COUPLER

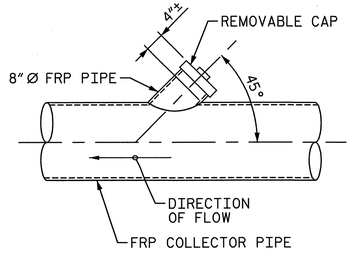

CLEANOUT DETAIL

NOTES:

1. FOR ADDITIONAL NOTES, SEE SHEET 4 OF 4.
2. FOR ADDITIONAL COLLECTOR PIPE SUPPORT DETAILS, SEE SHEET 3 OF 4.
3. CONTRACTOR SHALL ENSURE THAT PIPE WALL BUILDUP IS SUFFICIENT TO ENGAGE PIPE RESTRAINT CLAMP AT LONGITUDINAL RESTRAINT LOCATIONS.

PROJECT NO. U-2524C
GUILFORD COUNTY
STATION: POT 6+23.25 -RPCY4-
SHEET 2 OF 4

STATE OF NORTH CAROLINA
DEPARTMENT OF TRANSPORTATION
RALEIGH

STRUCTURE DRAINAGE SYSTEM DETAILS
-RAMP C-

NORTH CAROLINA PROFESSIONAL SEAL 28479 ENGINEER KEVIN G. BAILEY
5-30-13

DRAWN BY : CLG	DATE : 2-13	DESIGN ENGINEER OF RECORD: T. TOWNSEND	DATE : 5-13
CHECKED BY : TJT	DATE : 3-13		

STV/ Ralph Whitehead Associates, Inc.
1000 West Morehead St., Ste. 200
Charlotte, NC 28208
NC License No. F-0991

REVISIONS						SHEET NO.
NO.	BY:	DATE:	NO.	BY:	DATE:	S-641
1			3			TOTAL SHEETS
2			4			834

5/29/2013 9:59:22 AM R:\station\Finals\(13) Closed Drainage System Sheet 2 of 4.dgn

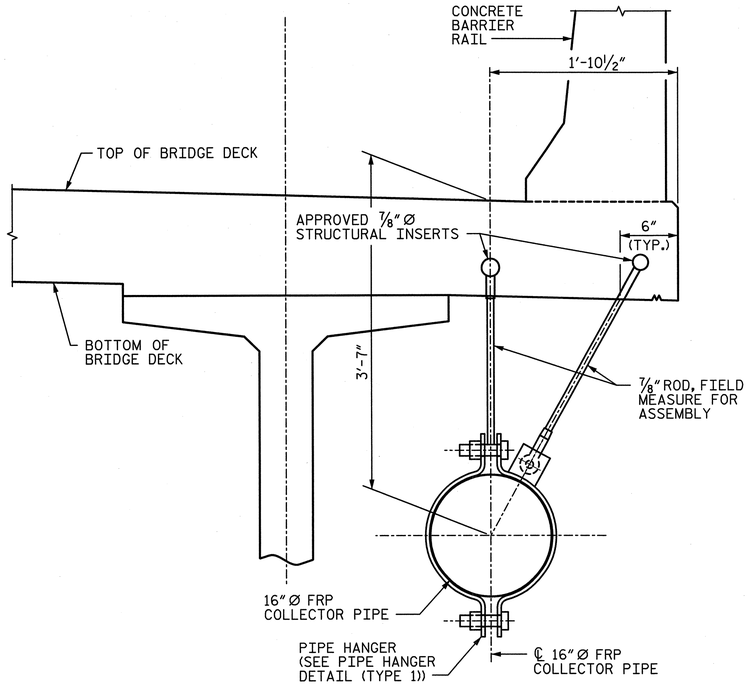

PIPE STANDOFF (TYPE 1)

ALL COMPONENTS SHALL BE GALVANIZED AFTER FABRICATION.

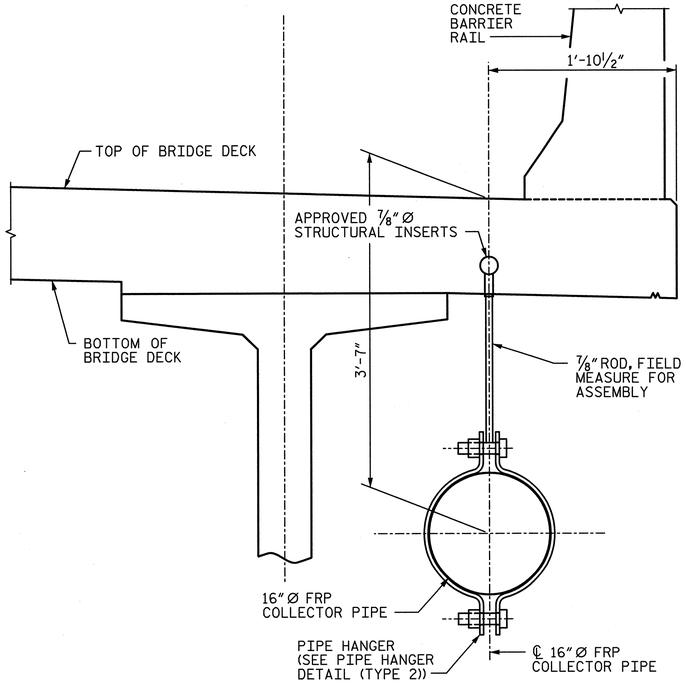

PIPE STANDOFF (TYPE 2)

ALL COMPONENTS SHALL BE GALVANIZED AFTER FABRICATION.

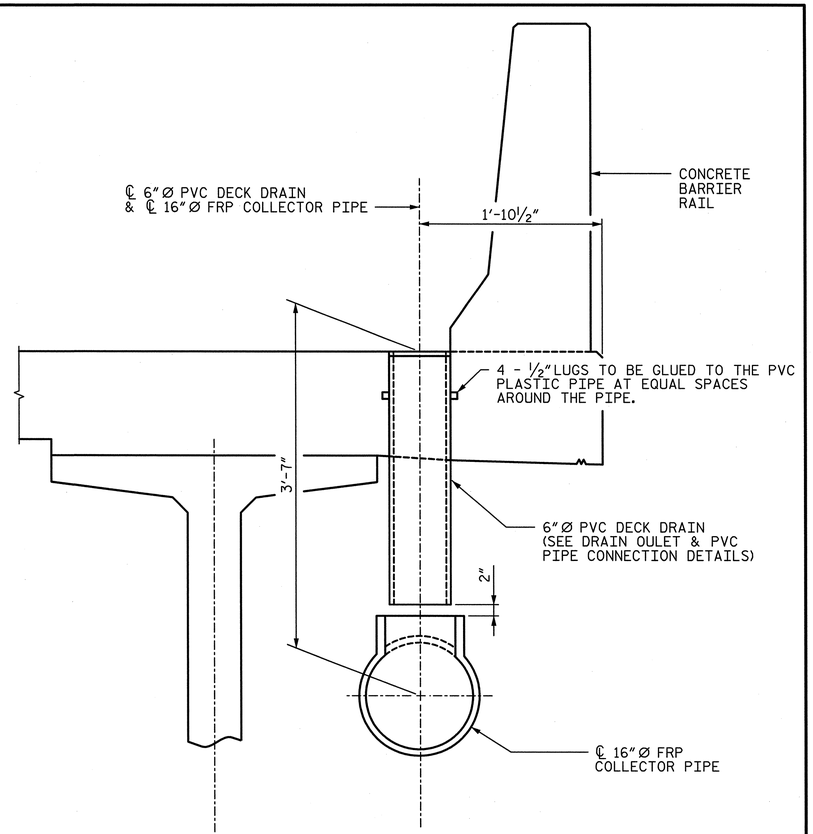

OVERHANG DRAINAGE DETAIL

(22 TOTAL)

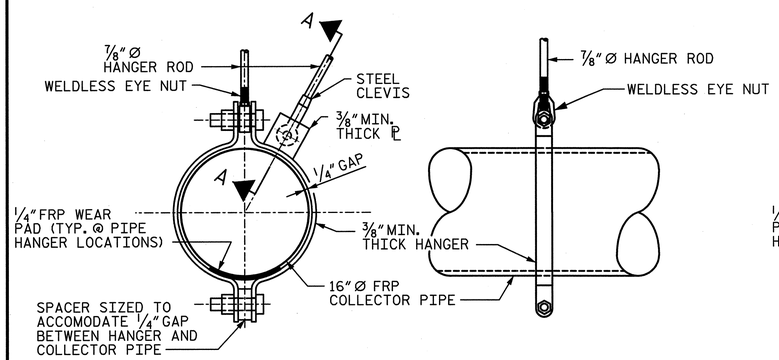

PIPE HANGER DETAIL (TYPE 1)

ALL COMPONENTS SHALL BE GALVANIZED AFTER FABRICATION.

SECTION A-A

(STEEL CLEVIS & ⅞"Ø HANGER ROD NOT SHOWN FOR CLARITY)

*DIMENSIONS TO BE DETERMINED BY MANUFACTURER.

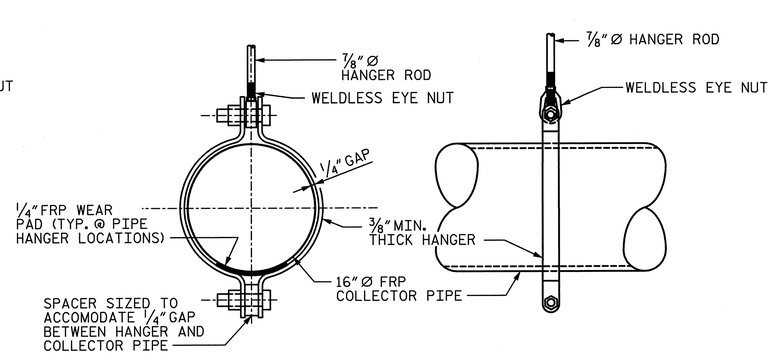

PIPE HANGER DETAIL (TYPE 2)

ALL COMPONENTS SHALL BE GALVANIZED AFTER FABRICATION.

NOTES:

1. FOR ADDITIONAL NOTES, SEE SHEET 4 OF 4.

PROJECT NO. U-2524C

GUILFORD COUNTY

STATION: POT 6+23.25 -RPCY4-

SHEET 3 OF 4

STATE OF NORTH CAROLINA
DEPARTMENT OF TRANSPORTATION
RALEIGH

STRUCTURE DRAINAGE SYSTEM DETAILS

-RAMP C-

NORTH CAROLINA PROFESSIONAL ENGINEER SEAL 28479 KEVIN G. BAILEY
5-30-13

STV/ Ralph Whitehead Associates, Inc.
1000 West Morehead St., Ste. 200
Charlotte, NC 28208
NC License No. F-0991

REVISIONS						SHEET NO.
NO.	BY:	DATE:	NO.	BY:	DATE:	S-642
1			3			TOTAL SHEETS
2			4			836

DRAWN BY : CLG DATE : 2-13
CHECKED BY : TJT DATE : 3-13

DESIGN ENGINEER OF RECORD: T. TOWNSEND DATE : 5-13

5/29/2013 9:59:24 AM R:\station\Finals\(14) Closed Drainage System Sheet 3 of 4.dgn

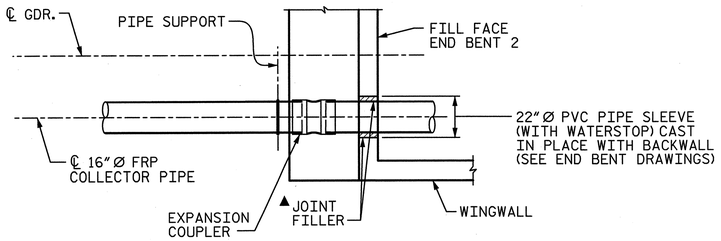

PLAN

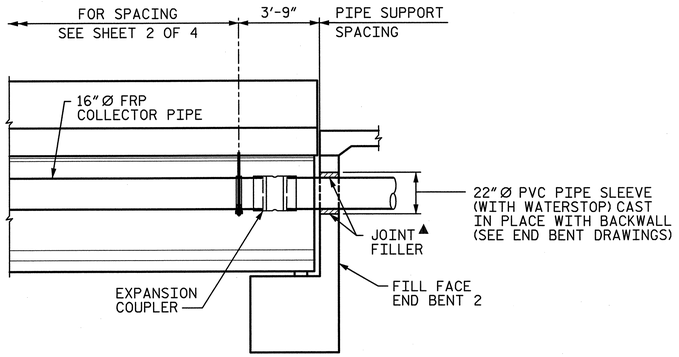

ELEVATION

COLLECTOR PIPE SYSTEM AT END BENT 2

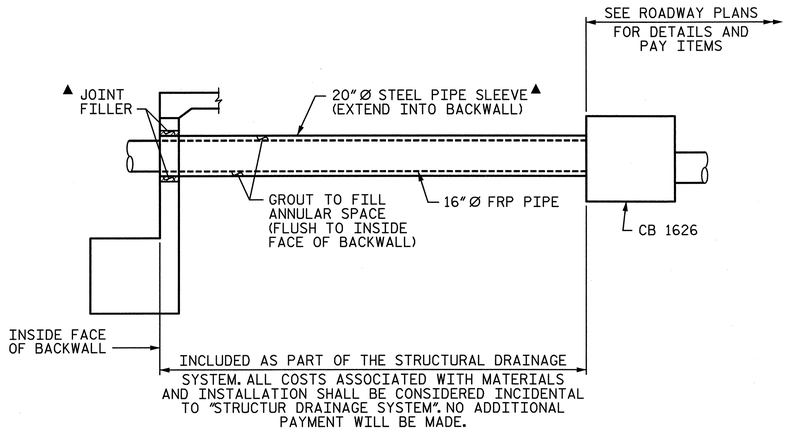

COLLECTOR PIPE SYSTEM BEYOND END BENT 2

ALL COMPONENTS OF COLLECTOR PIPE SYSTEM SHALL ACCOMODATE ANY FLARE/KINK NECESSARY TO REACH CATCH BASIN

CLOSED DRAINAGE SYSTEM NOTES

THE ENTIRE COST FOR THE LABOR AND MATERIALS NECESSARY TO FABRICATE AND INSTALL FRP PIPE, PIPE SUPPORT AND PIPE ANCHOR ASSEMBLIES SHALL BE INCLUDED IN THE LUMP SUM PRICE BID FOR THE "STRUCTURE DRAINAGE SYSTEM." SEE SPECIAL PROVISIONS FOR STRUCTURE DRAINAGE SYSTEM.

ALL COLLECTOR PIPES, ELBOWS, COUPLERS, AND TEES SHALL BE FIBERGLASS REINFORCED PLASTIC PIPE MEETING THE SPECIFICATIONS OF ASTM D2996 AND THE ACCELERATED UV WEATHERING PERFORMANCE REQUIREMENTS OF ASTM D4329-05 PER PROCEDURE ASTM G154.

EACH PIPE SECTION SHALL HAVE A MINIMUM OF TWO HANGERS.

COLLECTOR PIPE SHALL BE SUPPORTED FROM THE CONCRETE DECK SLAB. NO ATTACHMENT TO THE GIRDERS WILL BE PERMITTED.

CONTRACTOR SHALL PROVIDE FRP COUPLINGS CAPABLE OF HANDLING THE ANTICIPATED MOVEMENTS. ADDITIONALLY FRP COUPLINGS SHALL PROVIDE HORIZONTAL ALIGNMENT TOLERANCES SUCH THAT THE 16"Ø FRP COLLECTOR PIPE AND COUPLINGS CAN CLOSELY FOLLOW THE VERTICAL AND HORIZONTAL CURVE OF THE STRUCTURE.

THE CONTRACTOR SHALL BE RESPONSIBLE FOR DETERMINING THE HORIZONTAL AND VERTICAL ALIGNMENT OF THE DRAINAGE SYSTEM USING NECESSARY FITTINGS, TEES, AND WYES TO PROVIDE A CONTINUOUS DRAINAGE SYSTEM.

CONCRETE INSERTS SHALL HAVE A MINIMUM WORKING LOAD TENSION CAPACITY OF 4.5 KIPS.

CONTRACTOR SHALL VERIFY LOCATION OF CONCRETE INSERTS IN REGARD TO ADJACENT INSERTS AND DECK DRAINS. IF SPACING/LOCATION OF INSERTS RESULTS IN REDUCED INSERT CAPACITY, CONTRACTOR SHALL SUBMIT INSERT SYSTEM WITH APPROPRIATE CAPACITY, GIVEN CONSTRAINTS, OR PROVIDED ALTERNATE CONNECTION/SUPPORT DETAIL FOR REVIEW AND APPROVAL OF THE ENGINEER PRIOR TO INSTALLATION.

DECK DRAIN PIPE SHALL BE ASTM D1785, SCHEDULE 40. ALL PVC FITTINGS SHALL BE MINIMUM ASTM D2665, SCHEDULE 40.

EXPANSION JOINT COUPLERS IN THE COLLECTOR PIPE SHALL HAVE A MINIMUM CAPACITY TO ACCOMODATE 6-INCHES OF TOTAL MOVEMENT (3-INCHES EXPANSION/3-INCHES CONTRACTION).

AN OPTIONAL DETAIL FOR THE LONGITUDINAL RESTRAINTS AND THE LATERAL GUIDE MAY BE SUBMITTED FOR APPROVAL.

COLLECTOR PIPE SUPPORTS SHALL BE LOCATED WITHIN 12-INCHES, ± 4-INCHES, OF A COLLECTOR PIPE JOINT.

DECK DOWN-DRAIN PIPES SHALL BE CENTERED IN SLOTTED OPENING IN COLLECTOR PIPE REGARDLESS OF TEMPERATURE AT TIME OF INSTALLATION.

HANGER RODS SHALL BE ASTM A193, GRADE B7 OR CARBON STEEL ALL-THREAD HANGER RODS.

NUTS SHALL BE ASTM A194, GRADE 2H, HEAVY HEX NUTS.

THE DETAILS OF ALL PIPING, HARDWARE, OR OTHER MATERIAL SHALL BE PROVIDED BY THE CONTRACTOR AND IS SUBJECT TO THE APPROVAL OF THE ENGINEER.

▲ CENTER 20"Ø STEEL PIPE SLEEVE IN BLOCKOUT AND FILL ANNULAR SPACE AROUND PIPE WITH JOINT FILLER IN ACCORDANCE WITH STANDARD SPECIFICATION ARTICLE 1028-1.

WORKING DRAWINGS FOR THE DRAINAGE SYSTEM AND LAYOUT PLANS INCLUDING, BUT NOT LIMITED TO, PIPE SUPPORT BRACKETS, PIPE ALIGNMENT, PIPE LENGTHS, AND ALL NECESSARY FITTINGS, ELBOWS, WYES, ADAPTERS, GUIDES, RESTRAINTS, WEAR PADS, COUPLERS AND JOINTS SHALL BE DESIGNED AND SEALED BY A PROFESSIONAL ENGINEER LICENSED IN NORTH CAROLINA AND SUBMITTED FOR APPROVAL PRIOR TO ORDERING MATERIALS.

PIPE MANUFACTURER SHALL ENSURE THE PIPE AND THE PIPE SUPPORT BEARING AREA IS DESIGNED IN ACCORDANCE WITH THE HANGER SPACING PROVIDED IN THESE PLANS.

PIPE DESIGN MUST ALLOW VERTICAL FLEXURE FROM THE SUPERSTRUCTURE.

THE COLLECTOR PIPE SHALL CLOSELY FOLLOW THE LONGITUDINAL GRADE OF THE STRUCTURE WHILE MAINTAINING A MINIMUM OF 0.5% SLOPE AT ALL TIMES.

COUPLERS SHALL BE DESIGNED TO ACCOMMODATE A TURN AT EACH BENT IN ORDER TO FOLLOW THE HORIZONTAL AND VERTICAL CURVATURE OF THE BRIDGE OVERHANG.

THE PIPE MANUFACTURER SHALL ENSURE THE FRICTIONAL FORCE REQUIRED TO ACTIVATE THE EXPANSION COUPLERS DOES NOT OVERSTRESS THE COUPLER WALL BUILD-UP, DRAINAGE SYSTEM BRACKET SUPPORTS OR LATERAL RESTRAINTS.

WASHERS SHALL BE ASTM F436 OR APPROVED EQUIVALENT.

BOLTS, NUTS, AND WASHERS SHALL BE GALVANIZED IN ACCORDANCE WITH THE STANDARD SPECIFICATIONS.

BOLT THREADS SHALL BE BURRED TO PREVENT LOOSENING.

PVC PIPE SHALL BE PAINTED TO MATCH THE FINAL SURFACE FINISH OF THE STRUCTURE WITH TWO COATS OF AN ACRYLIC OR LATEX PAINT THAT IS CHEMICALLY COMPATIBLE WITH PVC PRODUCTS AND MEETS THE REQUIREMENTS OF ARTICLE 1080-12 OF THE STANDARD SPECIFICATIONS. EACH COAT SHALL BE 2 DRY MILS THICK. DECK DRAINS SHALL BE ROUGHENED PRIOR TO PAINTING.

ALL METALLIC COMPONENTS IN THE DRAINAGE SYSTEM, EXCEPT STAINLESS STEEL AND MALLEABLE IRON PARTS, ARE REQUIRED TO BE HOT-DIPPED GALVANIZED PER NCDOT STANDARD SPECIFICATIONS. ELECTRO-PLATE COATING ON STEEL RODS, STEEL YOKE TYPE PIPE ROLLS, BRACKETS, OTHER STEEL HARDWARE IS CONSIDERED BY NCDOT AS TOO THIN FOR OUTDOOR APPLICATIONS.

ALL FRP PIPE AND PVC PIPE SHALL BE INSTALLED PER MANUFACTURER'S RECOMMENDATIONS.

ALL STRUCTURAL STEEL SHALL BE ASTM A36 OR APPROVED EQUAL UNLESS NOTED OTHERWISE.

THE GALVANIZED SURFACE SHALL BE CLEANED TO (SSPC SP-1) PRIOR TO COATING.

ALL FABRICATION SHALL CONFORM TO THE APPLICABLE SECTION OF THE NORTH CAROLINA DEPARTMENT OF TRANSPORTATION STANDARD SPECIFICATIONS FOR ROADS AND STRUCTURES.

ALL FRP PIPE SHALL BE PIGMENTED TO MATCH THE FINAL SURFACE FINISH OF THE STRUCTURE.

ALL FRP PIPE SIZES ARE SHOWN AS INSIDE DIAMETER SIZES.

FRP PIPE WITHIN EMBANKMENT AND PROJECTING THROUGH END BENT BACKWALL SHALL BE DESIGNED FOR THE APPLICATION BY THE PIPE ENGINEER.

FRP = FIBERGLASS REINFORCED PLASTIC

PROJECT NO. U-2524C

GUILFORD COUNTY

STATION: POT 6+23.25 -RPCY4-

SHEET 4 OF 4

NORTH CAROLINA PROFESSIONAL SEAL 28479 ENGINEER KEVIN G. BAILEY 5-30-13

STATE OF NORTH CAROLINA
DEPARTMENT OF TRANSPORTATION
RALEIGH

STRUCTURE DRAINAGE SYSTEM DETAILS

-RAMP C-

REVISIONS						SHEET NO.
NO.	BY:	DATE:	NO.	BY:	DATE:	S-643
1			3			TOTAL SHEETS
2			4			834

STV/ Ralph Whitehead Associates, Inc.
1000 West Morehead St., Ste. 200
Charlotte, NC 28208
NC License No. F-0991

DRAWN BY : CLG DATE : 2-13
CHECKED BY : TJT DATE : 3-13

DESIGN ENGINEER OF RECORD: T. TOWNSEND DATE : 5-13

5/29/2013 9:59:26 AM R:\station\Finals\(16) Closed Drainage System Sheet 4 of 4.dgn

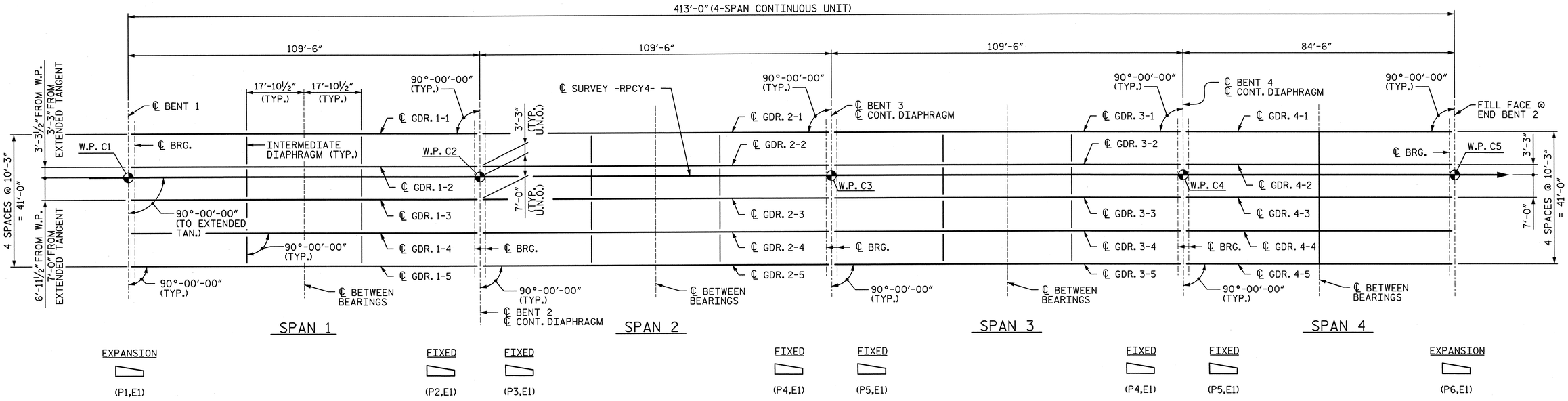

FRAMING PLAN - RAMP C

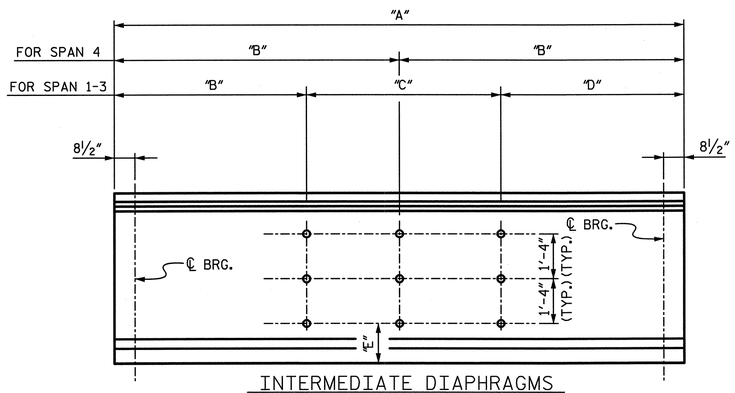

INTERMEDIATE DIAPHRAGMS

GIRDER ELEVATION

GIRDER DIMENSIONS						
GIRDER	"A"	"A" SLOPED	"B"	"C"	"D"	"E"
1-1	108'-8"	▲	36'-5½"	35'-9"	36'-5½"	2'-2¾"
1-2	108'-8"	▲	36'-5½"	35'-9"	36'-5½"	2'-2¾"
1-3	108'-8"	▲	36'-5½"	35'-9"	36'-5½"	2'-2¾"
1-4	108'-8"	▲	36'-5½"	35'-9"	36'-5½"	2'-2¾"
1-5	108'-8"	▲	36'-5½"	35'-9"	36'-5½"	2'-2¾"
2-1	108'-8"	108'-8¾"	36'-5½"	35'-9"	36'-5½"	2'-2¾"
2-2	108'-8"	108'-8¾"	36'-5½"	35'-9"	36'-5½"	2'-2¾"
2-3	108'-8"	108'-8¾"	36'-5½"	35'-9"	36'-5½"	2'-2¾"
2-4	108'-8"	108'-8¾"	36'-5½"	35'-9"	36'-5½"	2'-2¾"
2-5	108'-8"	108'-8¾"	36'-5½"	35'-9"	36'-5½"	2'-2¾"
3-1	108'-8"	108'-8⅞"	36'-5½"	35'-9"	36'-5½"	2'-2¾"
3-2	108'-8"	108'-8⅞"	36'-5½"	35'-9"	36'-5½"	2'-2¾"
3-3	108'-8"	108'-8⅞"	36'-5½"	35'-9"	36'-5½"	2'-2¾"
3-4	108'-8"	108'-8⅞"	36'-5½"	35'-9"	36'-5½"	2'-2¾"
3-5	108'-8"	108'-8⅞"	36'-5½"	35'-9"	36'-5½"	2'-2¾"
4-1	82'-8½"	▲	41'-4¼"	--	--	2'-2¾"
4-2	82'-8½"	▲	41'-4¼"	--	--	2'-2¾"
4-3	82'-8½"	▲	41'-4¼"	--	--	2'-2¾"
4-4	82'-8½"	▲	41'-4¼"	--	--	2'-2¾"
4-5	82'-8½"	▲	41'-4¼"	--	--	2'-2¾"

▲ SLOPE DIMENSIONS ARE NEGLIGIBLE

PROJECT NO. U-2524C
GUILFORD COUNTY
STATION: POT 6+23.25 -RPCY4-

STATE OF NORTH CAROLINA
DEPARTMENT OF TRANSPORTATION
RALEIGH

FRAMING PLAN

-RAMP C-

NORTH CAROLINA PROFESSIONAL ENGINEER SEAL 28479 KEVIN G. BAILEY 5-30-13

STV / Ralph Whitehead Associates, Inc.
1000 West Morehead St., Ste. 200
Charlotte, NC 28208
NC License No. F-0991

REVISIONS						SHEET NO.
NO.	BY:	DATE:	NO.	BY:	DATE:	S-644
1			3			TOTAL SHEETS
2			4			830

DRAWN BY : MM DATE : 11-12
CHECKED BY : YT DATE : 11-12
DESIGN ENGINEER OF RECORD: T. TOWNSEND DATE : 5-13

5/29/2013 9:59:28 AM R:\ustation\Finals\16) Framing Plan, Ramp C.dgn

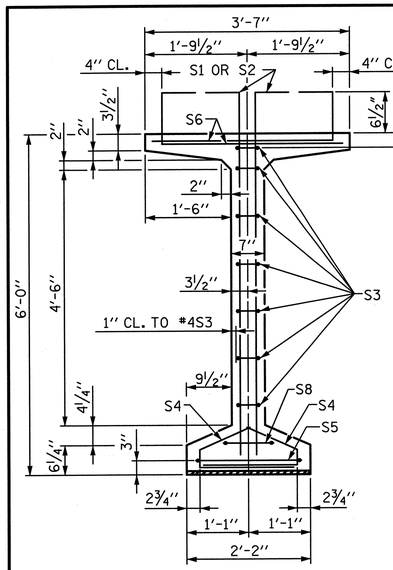

SECTION A-A

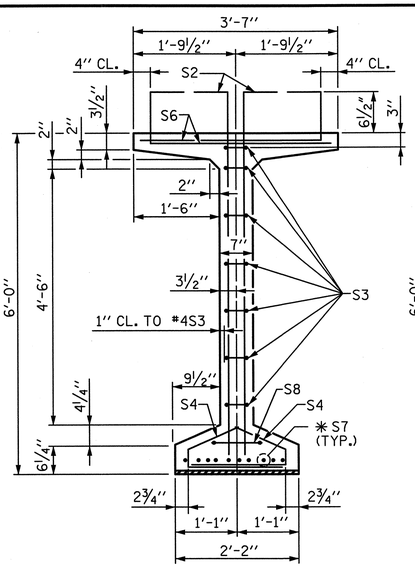

SECTION B-B

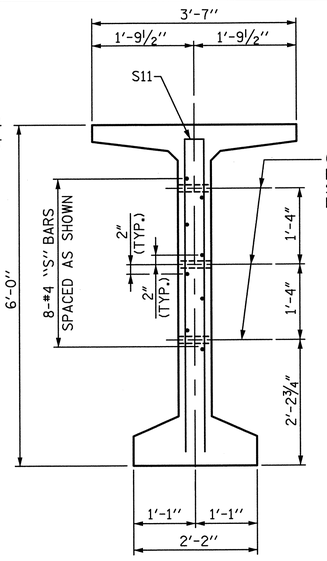

SECTION C-C

(S1 AND S9 BARS NOT SHOWN)

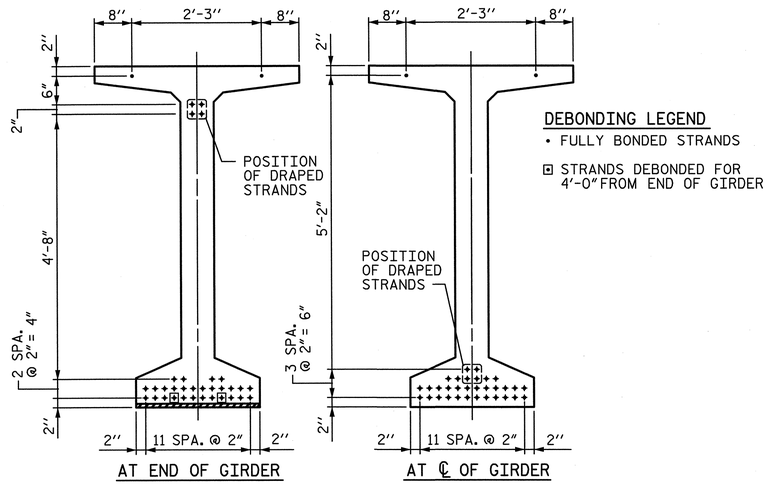

DEBONDING LEGEND

- FULLY BONDED STRANDS
- ⊡ STRANDS DEBONDED FOR 4'-0" FROM END OF GIRDER

0.6" Ø LOW RELAXATION STRAND LAYOUT

✱FOR S7 BARS, SEE SECTION D-D ON "STANDARD PRESTRESSED CONCRETE GIRDER CONTINUOUS FOR LIVE LOAD DETAILS" SHEET.

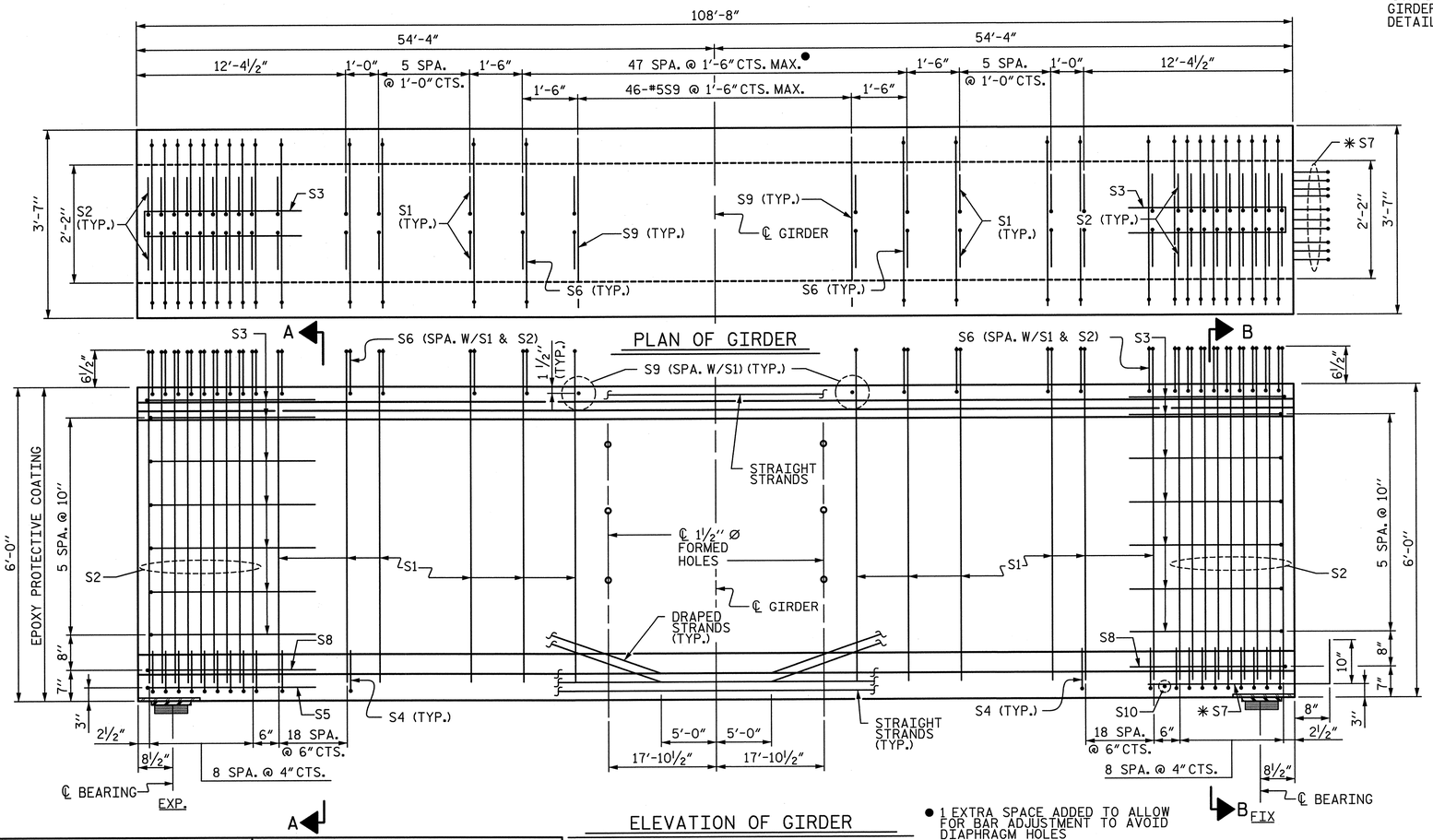

ELEVATION OF GIRDER

● 1 EXTRA SPACE ADDED TO ALLOW FOR BAR ADJUSTMENT TO AVOID DIAPHRAGM HOLES

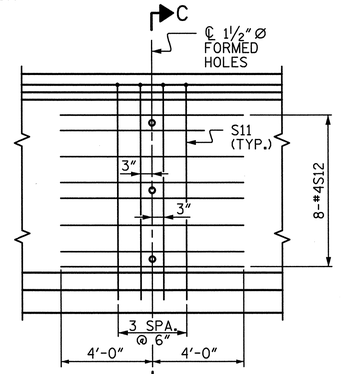

PARTIAL ELEVATION

SHOWING INTERMEDIATE STEEL DIAPHRAGM REINFORCING STEEL FOR GIRDERS 1-5.

0.6" Ø L. R. GRADE 270 STRANDS		
AREA (SQUARE INCHES)	ULTIMATE STRENGTH (LBS. PER STRAND)	APPLIED PRESTRESS (LBS. PER STRAND)
0.217	58,600	43,950

REINFORCING STEEL FOR ONE GDR

BAR	NUMBER	SIZE	TYPE	LENGTH	WEIGHT
S1	196	#4	①	6'-10½"	900
S2	36	#6	①	6'-10½"	372
S3	14	#4	②	8'-5"	79
S4	112	#4	③	3'-0"	224
S5	1	#5	②	9'-10"	10
S6	140	#5	④	4'-4½"	639
✱S7	10	#5	STR.	3'-8"	38
S8	2	#5	②	9'-0"	19
S9	46	#5	STR.	3'-3"	156
S10	1	#3	STR.	1'-10"	1
S11	8	#5	②	11'-8"	97
S12	16	#4	STR.	8'-0"	86

✱NOTE: S7 BARS SHALL BE BENT BEFORE SHIPMENT. HEAT BENDING SHALL NOT BE ALLOWED.

BAR TYPES

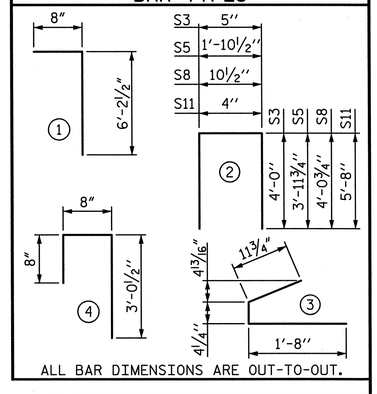

ALL BAR DIMENSIONS ARE OUT-TO-OUT.

QUANTITIES FOR ONE GIRDER

	REINFORCING STEEL	8,000 PSI CONCRETE	0.6" Ø L.R. STRANDS
	LB.	C.Y.	No.
EXTERIOR GDR.	2,621	23.3	34
INTERIOR GDR.	2,621	23.3	34

GIRDERS REQUIRED

NUMBER	LENGTH	TOTAL LENGTH
5	108'-8"	543'-4"

PROJECT NO. U-2524C

GUILFORD COUNTY

STATION: POT 6+23.25 -RPCY4-

SHEET 1 OF 3

STATE OF NORTH CAROLINA
DEPARTMENT OF TRANSPORTATION
RALEIGH

72" PRESTRESSED CONCRETE MODIFIED BULB TEE CONTINUOUS FOR LIVE LOAD SPAN 1 -RAMP C-

NORTH CAROLINA PROFESSIONAL SEAL 28479 ENGINEER KEVIN G. BAILEY 5-30-13

DRAWN BY : YT DATE : 11-12
CHECKED BY : PLF DATE : 11-12
DESIGN ENGINEER OF RECORD: T. TOWNSEND DATE : 5-13

STV / Ralph Whitehead Associates, Inc.
1000 West Morehead St., Ste. 200
Charlotte, NC 28208
NC License No. F-0991

REVISIONS						SHEET NO.
NO.	BY:	DATE:	NO.	BY:	DATE:	S-645
1			3			TOTAL SHEETS
2			4			83

5/29/2013 9:59:30 AM R:\ustation\Finals\(IT) MBT 72 Girder Sheet 1of 3.dgn

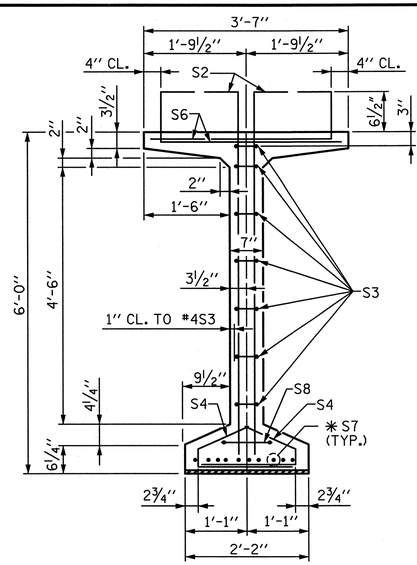

SECTION B-B

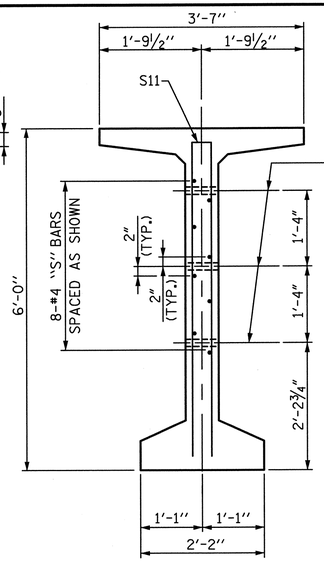

SECTION C-C

(S1 AND S9 BARS NOT SHOWN)

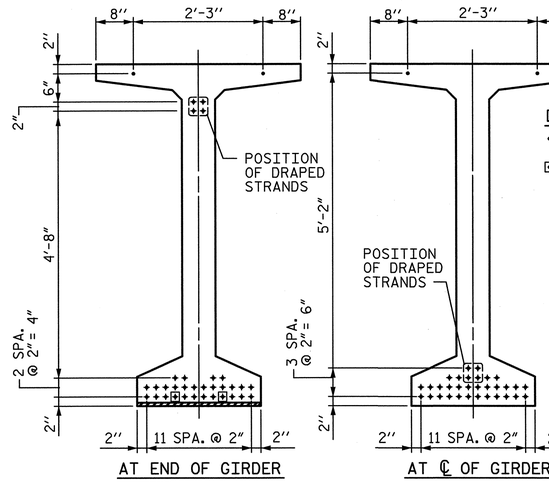

0.6" Ø LOW RELAXATION STRAND LAYOUT

DEBONDING LEGEND

- FULLY BONDED STRANDS
- ⊡ STRANDS DEBONDED FOR 4'-0" FROM END OF GIRDER

✱FOR S7 BARS, SEE SECTION D-D ON "STANDARD PRESTRESSED CONCRETE GIRDER CONTINUOUS FOR LIVE LOAD DETAILS" SHEET.

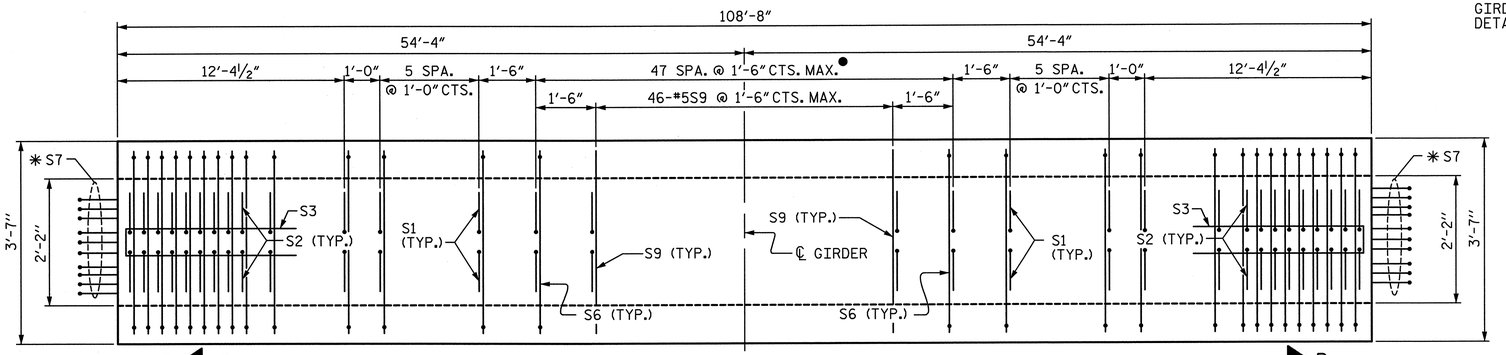

PLAN OF GIRDER

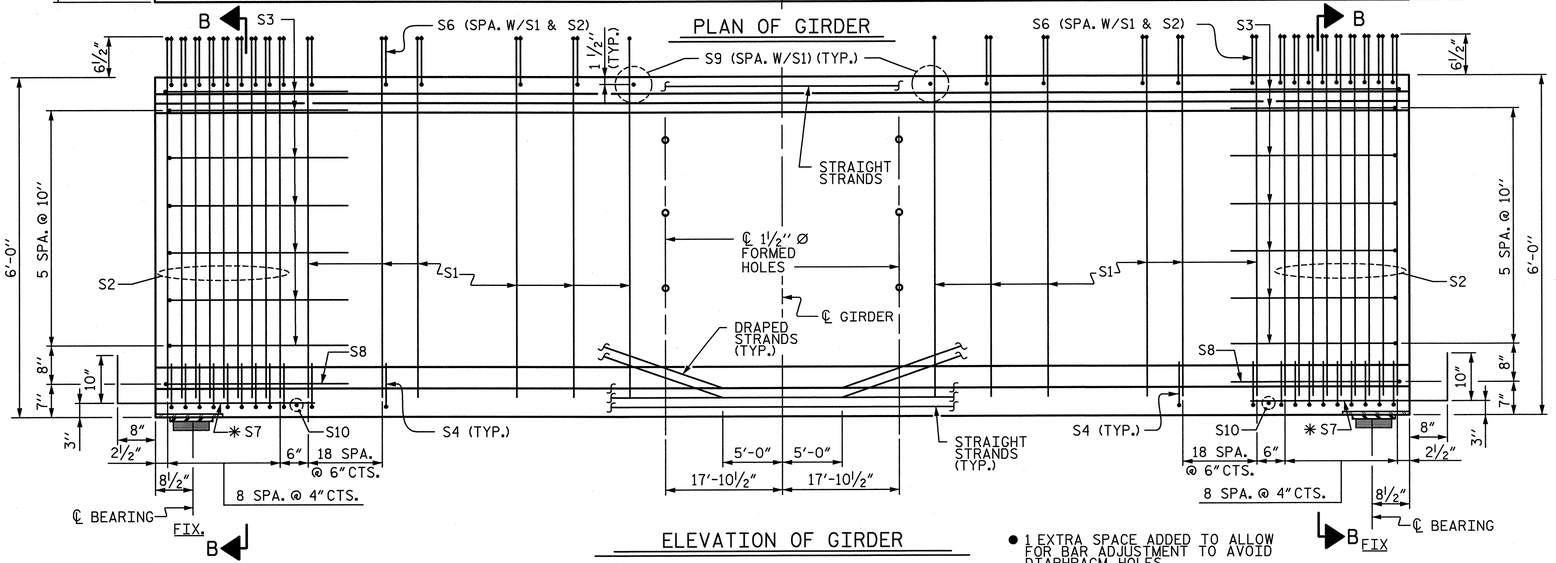

ELEVATION OF GIRDER

● 1 EXTRA SPACE ADDED TO ALLOW FOR BAR ADJUSTMENT TO AVOID DIAPHRAGM HOLES

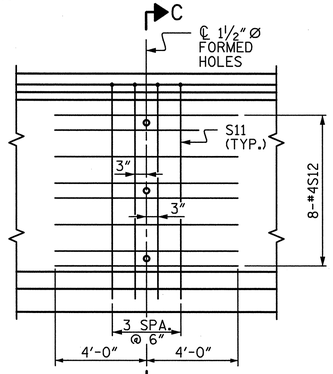

PARTIAL ELEVATION

SHOWING INTERMEDIATE STEEL DIAPHRAGM REINFORCING STEEL FOR GIRDERS 1-5.

0.6" Ø L. R. GRADE 270 STRANDS		
AREA (SQUARE INCHES)	ULTIMATE STRENGTH (LBS. PER STRAND)	APPLIED PRESTRESS (LBS. PER STRAND)
0.217	58,600	43,950

REINFORCING STEEL FOR ONE GDR

BAR	NUMBER	SIZE	TYPE	LENGTH	WEIGHT
S1	196	#4	①	6'-10½"	900
S2	36	#6	①	6'-10½"	372
S3	14	#4	②	8'-5"	79
S4	112	#4	③	3'-0"	224
S6	140	#5	④	4'-4½"	639
✱S7	20	#5	STR.	3'-8"	76
S8	2	#5	②	9'-0"	19
S9	46	#5	STR.	3'-3"	156
S10	2	#3	STR.	1'-10"	1
S11	8	#5	②	11'-8"	97
S12	16	#4	STR.	8'-0"	86

✱NOTE: S7 BARS SHALL BE BENT BEFORE SHIPMENT. HEAT BENDING SHALL NOT BE ALLOWED.

BAR TYPES

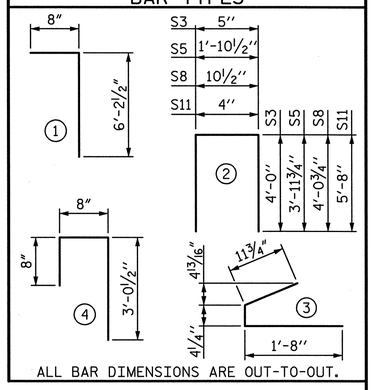

ALL BAR DIMENSIONS ARE OUT-TO-OUT.

QUANTITIES FOR ONE GIRDER

	REINFORCING STEEL	8,000 PSI CONCRETE	0.6" Ø L.R. STRANDS
	LB.	C.Y.	No.
EXTERIOR GDR.	2,649	23.3	34
INTERIOR GDR.	2,649	23.3	34

GIRDERS REQUIRED

NUMBER	LENGTH	TOTAL LENGTH
5 (SPAN 2)	108'-8"	543'-4"
5 (SPAN 3)	108'-8"	543'-4"

PROJECT NO. U-2524C

GUILFORD COUNTY

STATION: POT 6+23.25 -RPCY4-

SHEET 2 OF 3

STATE OF NORTH CAROLINA
DEPARTMENT OF TRANSPORTATION
RALEIGH

72" PRESTRESSED CONCRETE MODIFIED BULB TEE CONTINUOUS FOR LIVE LOAD SPAN 2 & 3 -RAMP C-

NORTH CAROLINA PROFESSIONAL ENGINEER SEAL 28479 KEVIN G. BAILEY 5-30-13

DRAWN BY : YT	DATE : 11-12	DESIGN ENGINEER OF RECORD: T. TOWNSEND	DATE : 5-13
CHECKED BY : PLF	DATE : 11-12		

STV / Ralph Whitehead Associates, Inc.
1000 West Morehead St., Ste. 200
Charlotte, NC 28208
NC License No. F-0991

REVISIONS						SHEET NO.
NO.	BY:	DATE:	NO.	BY:	DATE:	S-646
1			3			TOTAL SHEETS
2			4			83

5/29/2013 9:59:33 AM R:\ustation\Finals\(18) MBT 72 Girder Sheet 2 of 3.dgn

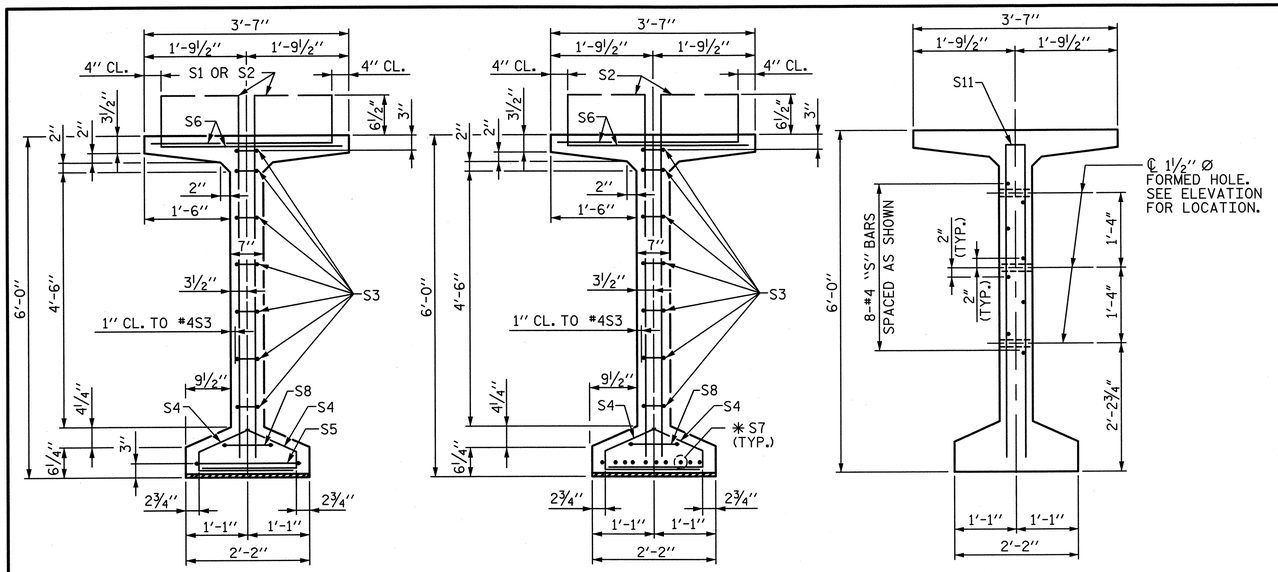

SECTION A-A

SECTION B-B

SECTION C-C

(S1 AND S9 BARS NOT SHOWN)

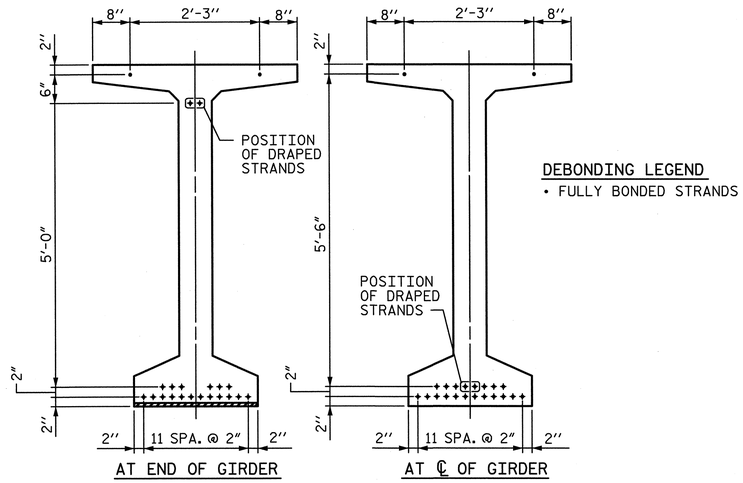

DEBONDING LEGEND

• FULLY BONDED STRANDS

0.6" Ø LOW RELAXATION STRAND LAYOUT

✱FOR S7 BARS, SEE SECTION D-D ON "STANDARD PRESTRESSED CONCRETE GIRDER CONTINUOUS FOR LIVE LOAD DETAILS" SHEET.

82'-8½"

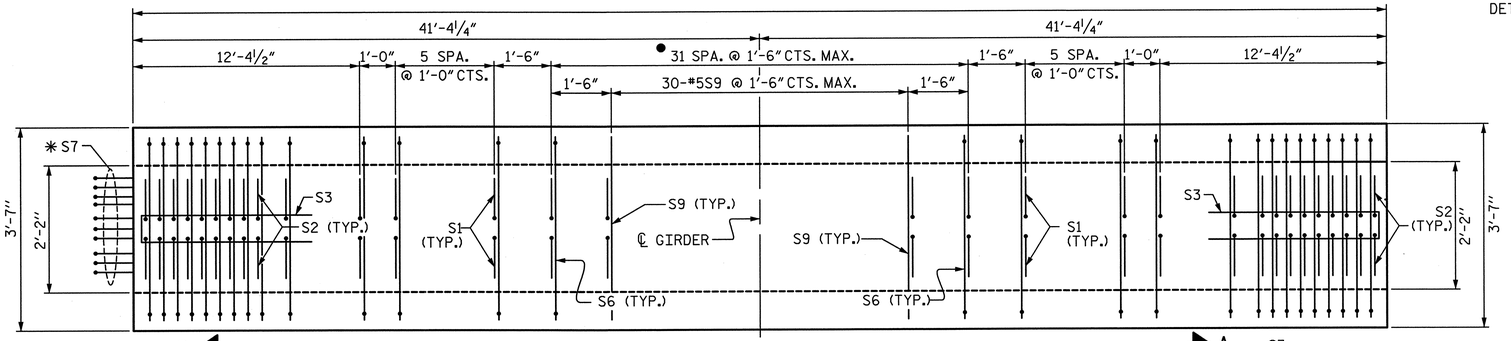

PLAN OF GIRDER

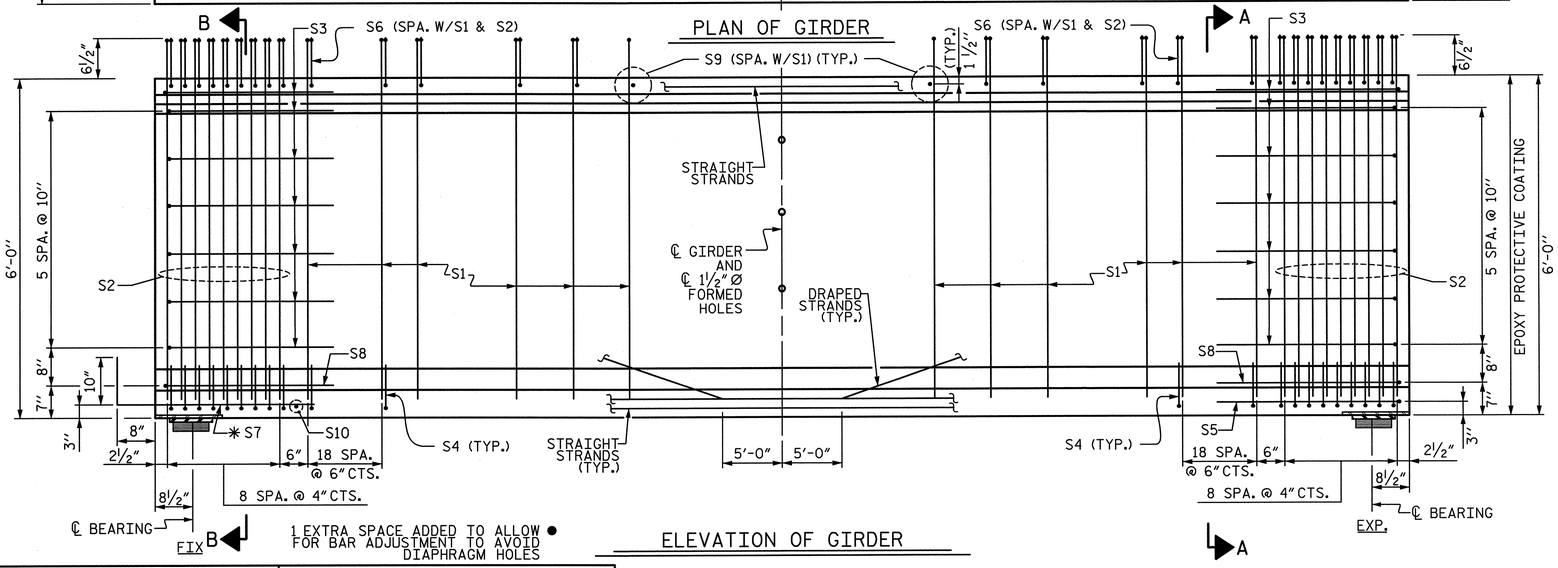

1 EXTRA SPACE ADDED TO ALLOW ● FOR BAR ADJUSTMENT TO AVOID DIAPHRAGM HOLES

ELEVATION OF GIRDER

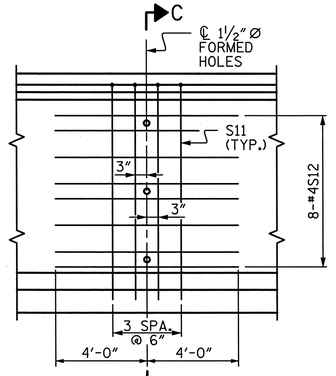

PARTIAL ELEVATION

SHOWING INTERMEDIATE STEEL DIAPHRAGM REINFORCING STEEL FOR GIRDERS 1-5.

0.6" Ø L. R. GRADE 270 STRANDS		
AREA (SQUARE INCHES)	ULTIMATE STRENGTH (LBS. PER STRAND)	APPLIED PRESTRESS (LBS. PER STRAND)
0.217	58,600	43,950

REINFORCING STEEL FOR ONE GDR

BAR	NUMBER	SIZE	TYPE	LENGTH	WEIGHT
S1	164	#4	①	6'-10½"	753
S2	36	#6	①	6'-10½"	372
S3	14	#4	②	8'-5"	79
S4	112	#4	③	3'-0"	224
S5	1	#5	②	9'-10"	10
S6	140	#5	④	4'-4½"	639
✱S7	10	#5	STR.	3'-8"	38
S8	2	#5	②	9'-0"	19
S9	30	#5	STR.	3'-3"	102
S10	1	#3	STR.	1'-10"	1
S11	4	#5	②	11'-8"	49
S12	8	#4	STR.	8'-0"	43

✱NOTE: S7 BARS SHALL BE BENT BEFORE SHIPMENT. HEAT BENDING SHALL NOT BE ALLOWED.

BAR TYPES

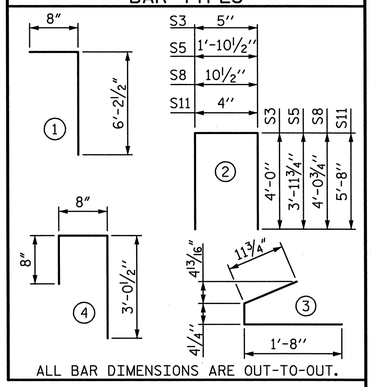

ALL BAR DIMENSIONS ARE OUT-TO-OUT.

QUANTITIES FOR ONE GIRDER

	REINFORCING STEEL	8,000 PSI CONCRETE	0.6" Ø L.R. STRANDS
	LB.	C.Y.	No.
EXTERIOR GDR.	2,329	17.7	22
INTERIOR GDR.	2,329	17.7	22

GIRDERS REQUIRED

NUMBER	LENGTH	TOTAL LENGTH
5	82'-8½"	413'-6½"

PROJECT NO. U-2524C

GUILFORD COUNTY

STATION: POT 6+23.25 -RPCY4-

SHEET 3 OF 3

STATE OF NORTH CAROLINA
DEPARTMENT OF TRANSPORTATION
RALEIGH

72" PRESTRESSED CONCRETE MODIFIED BULB TEE CONTINUOUS FOR LIVE LOAD SPAN 4 -RAMP C-

NORTH CAROLINA PROFESSIONAL SEAL 28479 ENGINEER KEVIN G. BAILEY 5-30-13

DRAWN BY : YT	DATE : 11-12	DESIGN ENGINEER OF RECORD: T. TOWNSEND	DATE : 5-13
CHECKED BY : PLF	DATE : 11-12		

STV / Ralph Whitehead Associates, Inc.
1000 West Morehead St., Ste. 200
Charlotte, NC 28208
NC License No. F-0991

REVISIONS						SHEET NO.
NO.	BY:	DATE:	NO.	BY:	DATE:	S-647
1			3			TOTAL SHEETS
2			4			836

5/29/2013 9:59:35 AM R:\ustation\Finals\(19) MBT 72 Girder Sheet 3 of 3.dgn

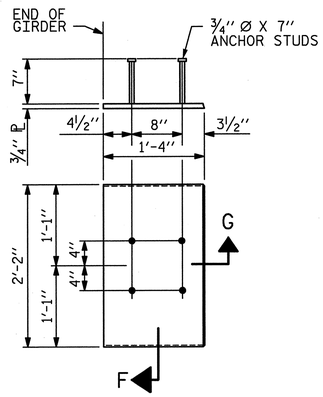

EMBEDDED PLATE "B-1" DETAILS FOR AASHTO 72" MODIFIED BULB TEES

(2 REQ'D. PER GIRDER)

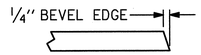

SECTION "G"

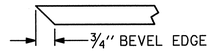

SECTION "F"

(SEE NOTES)

NOTES

ALL PRESTRESSING STRANDS SHALL BE 7-WIRE LOW-RELAXATION GRADE 270 STRANDS AND SHALL CONFORM TO AASHTO M203 EXCEPT FOR SAMPLING REQUIREMENTS WHICH SHALL BE IN ACCORDANCE WITH THE STANDARD SPECIFICATIONS.

ALL REINFORCING STEEL SHALL BE GRADE 60.

APPLY EPOXY PROTECTIVE COATING TO END OF GIRDER SURFACES INDICATED IN ELEVATION VIEW.

EMBEDDED PLATE "B-1" SHALL BE GALVANIZED IN ACCORDANCE WITH THE STANDARD SPECIFICATIONS. BEVEL EDGES OF PLATE "B-1" TO GIVE CLOSE FIT BUT NOT TIGHT FIT TO STEEL CASTING FORM.

ANCHOR STUDS SHALL CONFORM TO AASHTO M169 GRADES 1010 THROUGH 1020 OR APPROVED EQUAL, AND SHALL MEET THE TYPE "B" REQUIREMENTS OF SUBSECTION 7.3 OF THE ANSI/AASHTO/AWS D1.5 BRIDGE WELDING CODE.

AT ENDS OF GIRDERS TO BE EMBEDDED IN CONCRETE DIAPHRAGMS OR ENDWALLS, PRESTRESSING STRANDS MAY EXTEND A MAXIMUM OF 2" BEYOND THE GIRDER ENDS. OTHERWISE PRESTRESSED STRANDS SHALL BE CUT FLUSH WITH THE GIRDER ENDS.

THE TRANSFER OF LOAD FROM THE ANCHORAGES TO THE GIRDER SHALL BE DONE WHEN CONCRETE HAS REACHED A COMPRESSIVE STRENGTH OF NOT LESS THAN 6,400 PSI.

DEPENDING ON THE TYPE OF SYSTEM USED TO SUPPORT THE DECK SLAB FORMS, PRESET ANCHORS MAY BE NECESSARY IN THE PRESTRESSED CONCRETE GIRDER.

THE TOP SURFACE OF THE GIRDER, EXCLUDING THE OUTSIDE 4", SHALL BE RAKED TO A DEPTH OF ¼".

WHEN DRAPED STRANDS ARE DETAILED, THE LONGITUDINAL LOCATION OF THE HOLD DOWN DEVICES SHALL BE WITHIN 6" OF THE LOCATION SHOWN AND THE CENTER OF GRAVITY OF THE GROUP OF DRAPED STRANDS SHALL BE LOCATED WITHIN ½" OF THE THEORETICAL LOCATION SHOWN.

A 2" X 2" CHAMFER IS ALLOWED AT THE INTERSECTION OF THE WEB AND THE BOTTOM FLANGE.

THE CONTRACTOR HAS THE OPTION TO PROVIDE, AT NO ADDITIONAL COST TO THE DEPARTMENT, 2 ADDITIONAL STRANDS AT THE TOP OF THE GIRDER TO FACILITATE TYING OF THE REINFORCING STEEL. THESE STRANDS SHALL BE PULLED TO A LOAD OF 5,000 lbs.

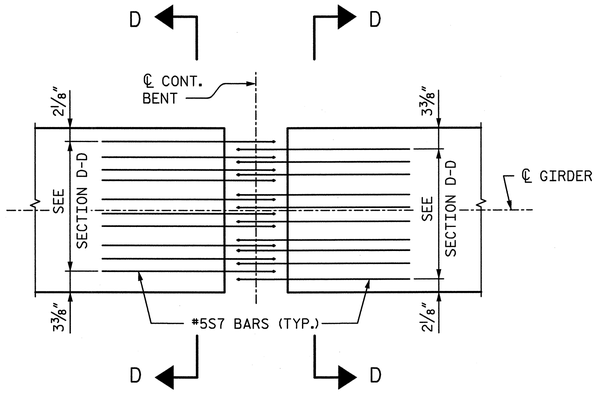

PLAN- BOTTOM FLANGE

EXTERIOR S7 BARS SHOWN, OTHERS OMITTED FOR CLARITY.

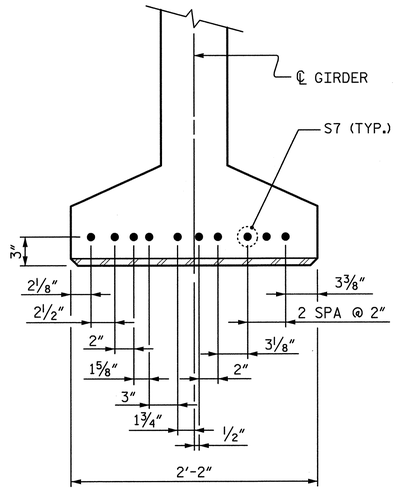

SECTION D-D

PROJECT NO. U-2524C

GUILFORD COUNTY

STATION: POT 6+23.25 -RPCY4-

STATE OF NORTH CAROLINA
DEPARTMENT OF TRANSPORTATION
RALEIGH

PRESTRESSED CONCRETE GIRDER CONTINUOUS FOR LIVE LOAD DETAILS

-RAMP C-

NORTH CAROLINA PROFESSIONAL SEAL 28479 ENGINEER KEVIN G. BAILEY 5-30-13

DRAWN BY : YT	DATE : 11-12	DESIGN ENGINEER OF RECORD: T. TOWNSEND	DATE : 5-13
CHECKED BY : PLF	DATE : 11-12		

STV / Ralph Whitehead Associates, Inc.
1000 West Morehead St., Ste. 200
Charlotte, NC 28208
NC License No. F-0991

REVISIONS						SHEET NO.
NO.	BY:	DATE:	NO.	BY:	DATE:	S-648
1			3			TOTAL SHEETS
2			4			830

5/29/2013 9:59:37 AM R:\station\Finals\(20) MBT 72 Girder Details.dgn

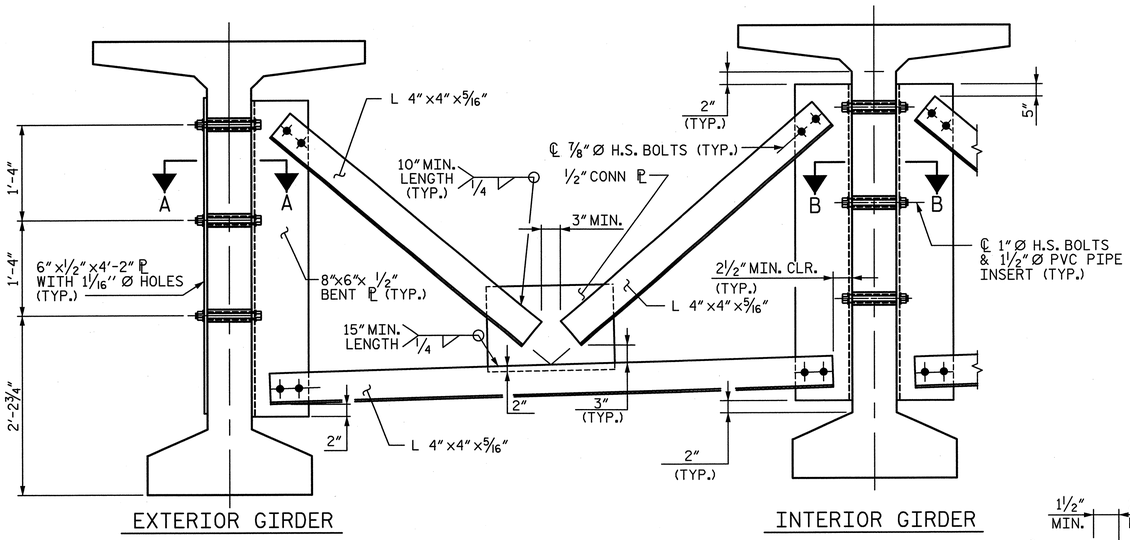

PART SECTION AT INTERMEDIATE DIAPHRAGM

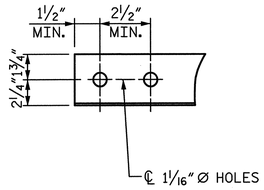

ANGLE END

(L 4"x 4"x 5/16")

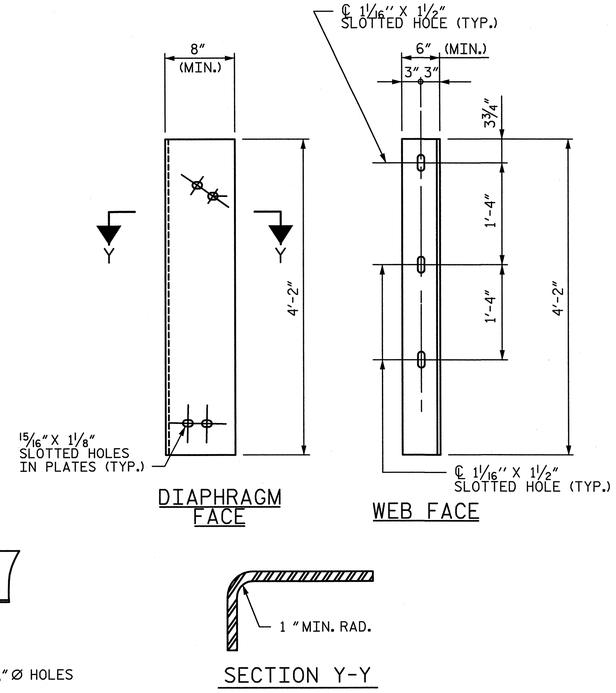

CONNECTOR PLATE DETAILS

STRUCTURAL STEEL NOTES

ALL INTERMEDIATE DIAPHRAGM STEEL AND CONNECTOR PLATES SHALL BE AASHTO M270 GRADE 50 OR APPROVED EQUAL.

TENSION ON THE ASTM A325 BOLTS THROUGH THE ANGLE MEMBER SHALL BE CALIBRATED USING DIRECT TENSION INDICATOR WASHERS IN ACCORDANCE WITH THE STANDARD SPECIFICATIONS.

TENSION ON THE ASTM A449 BOLTS THROUGH THE GIRDER WEB SHALL BE SNUG TIGHTENED FOLLOWED BY AN ADDITIONAL 1/4 TURN.

THE PLATES, BENT PLATES, AND ANGLES SHALL BE GALVANIZED OR METALLIZED IN ACCORDANCE WITH THE STANDARD SPECIFICATIONS. FOR THERMAL SPRAYED COATINGS (METALLIZATION), SEE SPECIAL PROVISIONS.

FOR METALLIZATION, APPLY AN 8 MIL THICK 99.99 PERCENT ZINC (W-Zn-1) THERMAL SPRAYED COATING WITH A 0.5 MIL THICK SEAL COAT TO ALL STEEL DIAPHRAGM SURFACES IN ACCORDANCE WITH THE THERMAL SPRAYED COATINGS SPECIAL PROVISION AND SECTION 442 OF THE STANDARD SPECIFICATIONS.

GALVANIZE THE HIGH STRENGTH BOLTS, NUTS, WASHERS AND DIRECT TENSION INDICATORS IN ACCORDANCE WITH THE STANDARD SPECIFICATIONS.

USE AN ASTM F436 HARDENED WASHER WITH STANDARD AND SLOTTED HOLES UNDER EACH BOLT HEAD AND NUT.

FOR BOLTS THROUGH THE GIRDER WEB, PROVIDE SUFFICIENT LENGTH OF THREADS ON ALL BOLTS TO ACCOMMODATE WASHERS AND THE THICKNESS OF CONNECTING MEMBER PLUS AT LEAST 1/4"PROJECTION BEYOND THE NUT.

INTERMEDIATE DIAPHRAGM ASSEMBLY SHALL COMPLY WITH SECTION 1072 OF THE STANDARD SPECIFICATIONS.

SUBMIT TWO SETS OF WORKING DRAWINGS FOR THE INTERMEDIATE DIAPHRAGM ASSEMBLY FOR REVIEW, COMMENTS AND ACCEPTANCE. AFTER REVIEW, COMMENTS, AND ACCEPTANCE, SUBMIT SEVEN SETS FOR DISTRIBUTION.

IN THE EXTERIOR BAYS, PLACE TEMPORARY STRUTS BETWEEN PRESTRESSED GIRDERS ADJACENT TO THE STEEL DIAPHRAGMS. STRUTS SHALL REMAIN IN PLACE 3 DAYS AFTER CONCRETE IS PLACED.

THE COST OF THE STEEL DIAPHRAGMS AND ASSEMBLIES SHALL BE INCLUDED IN THE UNIT PRICE BID FOR PRESTRESSED CONCRETE GIRDERS.

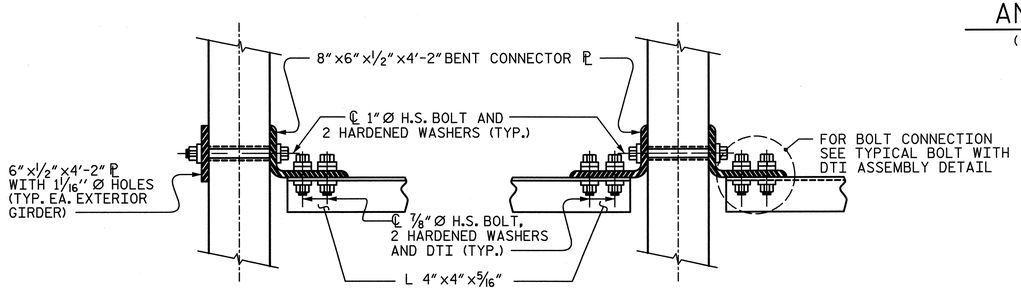

CONNECTION DETAILS

(FOR SKEW = 90°)

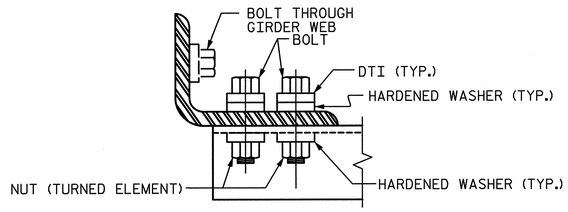

BOLT WITH DTI ASSEMBLY DETAIL

PROJECT NO. U-2524C

GUILFORD COUNTY

STATION: POT 6+23.25 -RPCY4-

STATE OF NORTH CAROLINA
DEPARTMENT OF TRANSPORTATION
RALEIGH

INTERMEDIATE STEEL DIAPHRAGMS FOR 72" MODIFIED BULB TEE PRESTRESSED CONCRETE GIRDERS -RAMP C-

NORTH CAROLINA PROFESSIONAL SEAL 28479 ENGINEER KEVIN G. BAILEY 5-30-13

DRAWN BY : MM	DATE : 11-12	DESIGN ENGINEER OF RECORD: K. BAILEY	DATE : 5-13
CHECKED BY : YT	DATE : 11-12		

STV / Ralph Whitehead Associates, Inc.
1000 West Morehead St., Ste. 200
Charlotte, NC 28208
NC License No. F-0991

REVISIONS						SHEET NO.
NO.	BY:	DATE:	NO.	BY:	DATE:	S-649
1			3			TOTAL SHEETS
2			4			834

5/29/2013 9:59:39 AM R:\ustation\Finals\(2) MBT 72 Int SteelDiaph Details.dgn

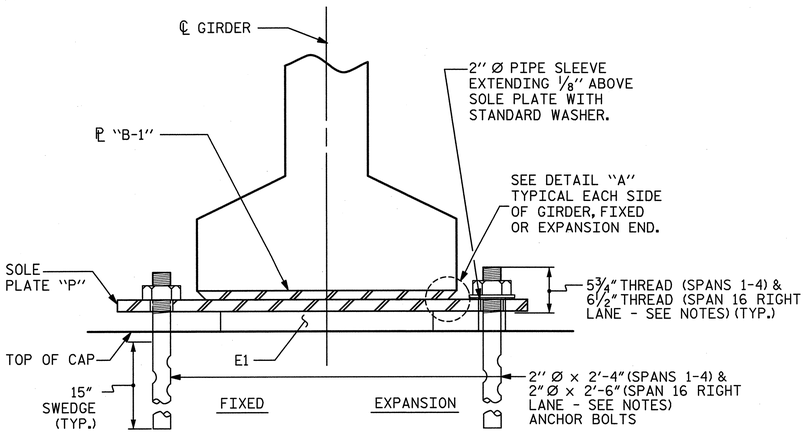

SECTION E-E

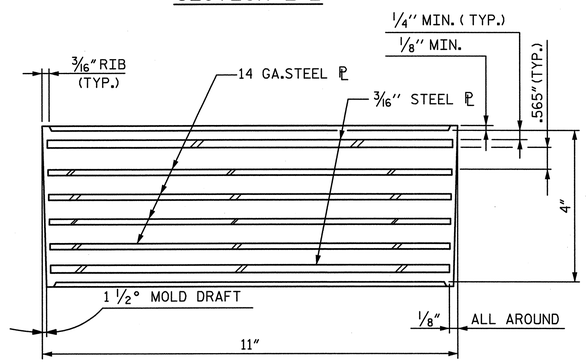

TYPICAL SECTION OF ELASTOMERIC BEARINGS

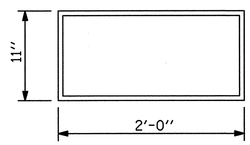

(40 REQ'D)

PLAN VIEW OF ELASTOMERIC BEARING

TYPE E1

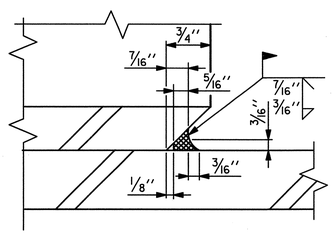

DETAIL "A"

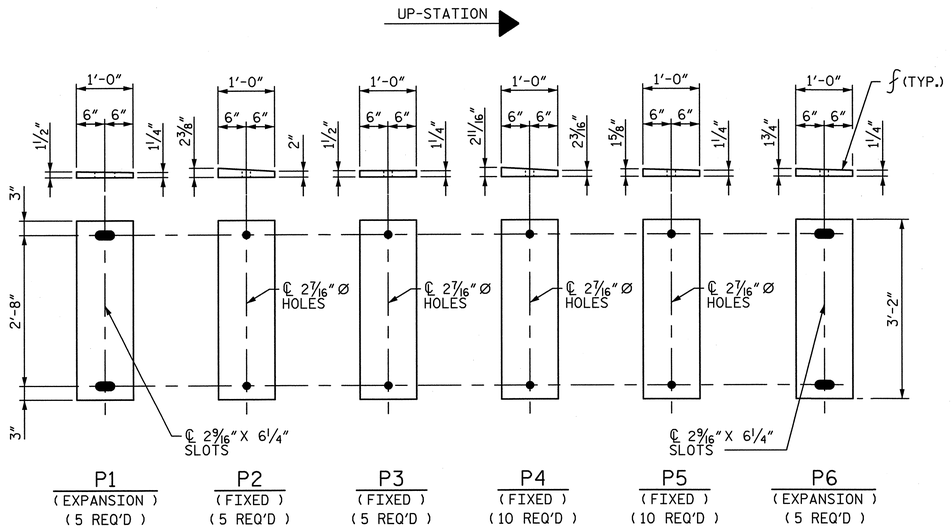

SOLE PLATE DETAILS ("P")

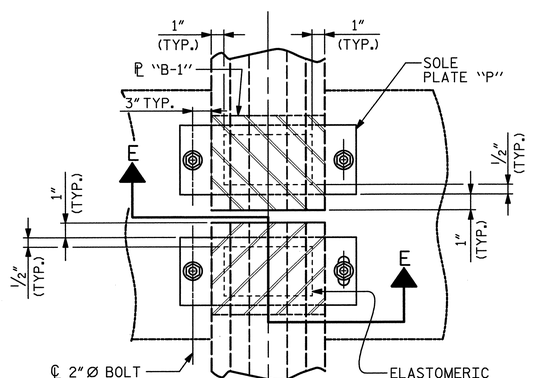

TYPICAL HALF-PLAN (SHOWING CONTINUOUS BENT)

TYPICAL HALF-PLAN (SHOWING SIMPLE SPAN BENT)

NOTES

AT ALL FIXED POINTS OF SUPPORT, NUTS FOR ANCHOR BOLTS ARE TO BE TIGHTENED FINGER TIGHT AND THEN BACKED OFF 1/2 TURN. THE THREAD OF THE NUT AND BOLT SHALL THEN BE BURRED WITH A SHARP POINTED TOOL.

THE 2'' Ø PIPE SLEEVE SHALL BE CUT FROM SCHEDULE 40 PVC PLASTIC PIPE. THE PVC PLASTIC PIPE SHALL MEET THE REQUIREMENTS OF ASTM D1785.

STEEL SOLE PLATES, ANCHOR BOLTS, NUTS, AND WASHERS SHALL BE GALVANIZED IN ACCORDANCE WITH THE STANDARD SPECIFICATIONS.

PRIOR TO WELDING, GRIND THE GALVANIZED SURFACE OF THE PORTION OF THE EMBEDDED PLATE AND SOLE PLATE THAT ARE TO BE WELDED. AFTER WELDING, DAMAGED GALVANIZED SURFACES SHALL BE REPAIRED IN ACCORDANCE WITH THE STANDARD SPECIFICATIONS.

WHEN WELDING THE SOLE PLATE TO THE EMBEDDED PLATE IN THE GIRDER, USE TEMPERATURE INDICATING WAX PENS, OR OTHER SUITABLE MEANS, TO ENSURE THAT THE TEMPERATURE OF THE SOLE PLATE DOES NOT EXCEED 300°F. TEMPERATURES ABOVE THIS MAY DAMAGE THE ELASTOMER.

SOLE PLATE "P", BOLTS, NUTS, WASHERS, AND PIPE SLEEVE SHALL BE INCLUDED IN THE PAY ITEM FOR PRESTRESSED CONCRETE GIRDERS.

ANCHOR BOLTS SHALL MEET THE REQUIREMENTS OF ASTM A449. NUTS SHALL MEET THE REQUIREMENTS OF AASHTO M291-DH OR AASHTO M292-2H. WASHERS SHALL MEET THE REQUIREMENTS OF AASHTO M293. NO SHOP DRAWINGS ARE REQUIRED FOR ANCHOR BOLTS, NUTS AND WASHERS. SHOP INSPECTION IS REQUIRED.

ALL SURFACES OF BEARING PLATES SHALL BE SMOOTH AND STRAIGHT.

THE ELASTOMER IN THE STEEL REINFORCED BEARING SHALL HAVE A SHEAR MODULUS OF 0.160 KSI, IN ACCORDANCE WITH AASHTO M251.

FOR STEEL REINFORCED ELASTOMERIC BEARING, SEE SPECIAL PROVISIONS.

ALL BEARING PLATES SHALL BE M270 GRADE 50.

FOR ADDITIONAL DETAILS SEE RIGHT LANE BRIDGE PLANS.

— LOAD RATINGS —	
	MAX.D.L.+ L.L.
TYPE E1	354 K

PROJECT NO. U-2524C

GUILFORD COUNTY

STATION: POT 6+23.25 -RPCY4-

STATE OF NORTH CAROLINA
DEPARTMENT OF TRANSPORTATION
RALEIGH

ELASTOMERIC BEARING DETAILS

-RAMP C-

NORTH CAROLINA PROFESSIONAL SEAL 28479 ENGINEER KEVIN G. BAILEY
5-30-13

DRAWN BY : MM	DATE : 11-12	DESIGN ENGINEER OF RECORD: K. BAILEY	DATE : 5-13
CHECKED BY : YT	DATE : 11-12		

STV / Ralph Whitehead Associates, Inc.
1000 West Morehead St., Ste. 200
Charlotte, NC 28208
NC License No. F-0991

REVISIONS						SHEET NO.
NO.	BY:	DATE:	NO.	BY:	DATE:	S-650
1			3			TOTAL SHEETS
2			4			836

5/29/2013 9:59:41 AM R:\station\Finals\(22) Elastomeric Brg Details.dgn

SPANS 1, 2, & 3

	TWENTIETH POINTS	0.00	0.05	0.10	0.15	0.20	0.25	0.30	0.35	0.40	0.45	0.50	0.55	0.60	0.65	0.70	0.75	0.80	0.85	0.90	0.95	1.00
GIRDERS 1 & 5	CAMBER (GIRDER ALONE IN PLACE) (FT.)	0.000	0.055	0.106	0.147	0.186	0.217	0.243	0.263	0.277	0.286	0.289	0.286	0.277	0.263	0.243	0.217	0.186	0.147	0.106	0.055	0.000
	DEFLECTION DUE TO SUPERIMPOSED D.L. (FT.)**	0.000	-0.020	-0.040	0.060	-0.078	-0.093	-0.107	-0.118	-0.126	-0.131	-0.132	-0.131	-0.126	-0.118	-0.107	-0.093	-0.078	-0.060	-0.040	-0.020	0.000
	FINAL CAMBER (IN.)	0"	7/16"	13/16"	1 1/16"	1 5/16"	1 1/2"	1 5/8"	1 3/4"	1 13/16"	1 7/8"	1 7/8"	1 7/8"	1 13/16"	1 3/4"	1 5/8"	1 1/2"	1 5/16"	1 1/16"	13/16"	7/16"	0"
GIRDERS 2 & 4	CAMBER (GIRDER ALONE IN PLACE) (FT.)	0.000	0.055	0.106	0.147	0.186	0.217	0.243	0.263	0.277	0.286	0.289	0.286	0.277	0.263	0.243	0.217	0.186	0.147	0.106	0.055	0.000
	DEFLECTION DUE TO SUPERIMPOSED D.L. (FT.)**	0.000	-0.020	-0.041	-0.060	-0.079	-0.095	-0.109	-0.120	-0.128	-0.133	-0.139	-0.133	-0.128	-0.120	-0.109	-0.095	-0.079	-0.060	-0.041	-0.022	0.000
	FINAL CAMBER (IN.)	0"	7/16"	13/16"	1 1/16"	1 5/16"	1 7/16"	1 5/8"	1 11/16"	1 13/16"	1 13/16"	1 7/8"	1 13/16"	1 13/16"	1 11/16"	1 5/8"	1 7/16"	1 5/16"	1 1/16"	13/16"	7/16"	0"
GIRDER 3	CAMBER (GIRDER ALONE IN PLACE) (FT.)	0.000	0.055	0.106	0.147	0.186	0.217	0.243	0.263	0.277	0.286	0.289	0.286	0.277	0.263	0.243	0.217	0.186	0.147	0.106	0.055	0.000
	DEFLECTION DUE TO SUPERIMPOSED D.L. (FT.)**	0.000	-0.021	-0.041	-0.062	-0.080	-0.097	-0.111	-0.122	-0.131	-0.136	-0.137	-0.136	-0.131	-0.122	-0.111	-0.097	-0.080	-0.062	-0.041	-0.021	0.000
	FINAL CAMBER (IN.)	0"	7/16"	3/4"	1"	1 1/4"	1 7/16"	1 9/16"	1 11/16"	1 3/4"	1 13/16"	1 13/16"	1 13/16"	1 3/4"	1 11/16"	1 9/16"	1 7/16"	1 1/4"	1"	3/4"	7/16"	0"

SPAN 4

	TWENTIETH POINTS	0.00	0.05	0.10	0.15	0.20	0.25	0.30	0.35	0.40	0.45	0.50	0.55	0.60	0.65	0.70	0.75	0.80	0.85	0.90	0.95	1.00
GIRDERS 1 & 5	CAMBER (GIRDER ALONE IN PLACE) (FT.)	0.000	0.022	0.042	0.058	0.074	0.086	0.097	0.104	0.110	0.113	0.115	0.113	0.110	0.104	0.097	0.086	0.074	0.058	0.042	0.022	0.000
	DEFLECTION DUE TO SUPERIMPOSED D.L. (FT.)**	0.000	-0.007	-0.012	-0.021	-0.024	-0.033	-0.034	-0.041	-0.040	-0.046	-0.042	-0.046	-0.040	-0.041	-0.034	-0.033	-0.024	-0.021	-0.012	-0.007	0.000
	FINAL CAMBER (IN.)	0"	3/16"	3/8"	7/16"	9/16"	5/8"	3/4"	3/4"	13/16"	13/16"	7/8"	13/16"	13/16"	3/4"	3/4"	5/8"	9/16"	7/16"	3/8"	3/16"	0"
GIRDERS 2 & 4	CAMBER (GIRDER ALONE IN PLACE) (FT.)	0.000	0.022	0.042	0.058	0.074	0.086	0.097	0.104	0.110	0.113	0.115	0.113	0.110	0.104	0.097	0.086	0.074	0.058	0.042	0.022	0.000
	DEFLECTION DUE TO SUPERIMPOSED D.L. (FT.)**	0.000	-0.008	-0.013	-0.023	-0.025	-0.034	-0.035	-0.042	-0.041	-0.046	-0.043	-0.046	-0.041	-0.042	-0.035	-0.034	-0.025	-0.023	-0.013	-0.008	0.000
	FINAL CAMBER (IN.)	0"	3/16"	3/8"	7/16"	9/16"	5/8"	3/4"	3/4"	13/16"	13/16"	7/8"	13/16"	13/16"	3/4"	3/4"	5/8"	9/16"	7/16"	3/8"	3/16"	0"
GIRDER 3	CAMBER (GIRDER ALONE IN PLACE) (FT.)	0.000	0.022	0.042	0.058	0.074	0.086	0.097	0.104	0.110	0.113	0.115	0.113	0.110	0.104	0.097	0.086	0.074	0.058	0.042	0.022	0.000
	DEFLECTION DUE TO SUPERIMPOSED D.L. (FT.)**	0.000	-0.007	-0.013	-0.020	-0.026	-0.032	-0.036	-0.040	-0.042	-0.044	-0.044	-0.044	-0.042	-0.040	-0.036	-0.032	-0.026	-0.020	-0.013	-0.007	0.000
	FINAL CAMBER (IN.)	0"	3/16"	3/8"	7/16"	9/16"	5/8"	3/4"	3/4"	13/16"	13/16"	7/8"	13/16"	13/16"	3/4"	3/4"	5/8"	9/16"	7/16"	3/8"	3/16"	0"

** INCLUDES FUTURE WEARING SURFACE IN SUPERIMPOSED DEAD LOAD

CAMBER SIGN CONVENTION

NOTES:

1. ALL VALUES ARE SHOWN IN FEET (DECIMAL FORM), EXCEPT "FINAL CAMBER" WHICH IS GIVEN IN INCHES (FRACTION FORM).

PROJECT NO. U-2524C

GUILFORD COUNTY

STATION: POT 6+23.25 -RPCY4-

STATE OF NORTH CAROLINA
DEPARTMENT OF TRANSPORTATION
RALEIGH

PRESTRESSED CONCRETE MODIFIED BULB TEE GIRDER CAMBERS

-RAMP C-

NORTH CAROLINA PROFESSIONAL SEAL 28479 ENGINEER KEVIN G. BAILEY 5-30-13

REVISIONS						SHEET NO.
NO.	BY:	DATE:	NO.	BY:	DATE:	S-651
1			3			TOTAL SHEETS
2			4			83

STV / Ralph Whitehead Associates, Inc.
1000 West Morehead St., Ste. 200
Charlotte, NC 28208
NC License No. F-0991

DRAWN BY : MM DATE : 11-12
CHECKED BY : YT DATE : 11-12

DESIGN ENGINEER OF RECORD: T. TOWNSEND DATE : 5-13

5/29/2013 9:59:43 AM R:\station\Finals\(23) MBT 72 Girder Camber.dgn

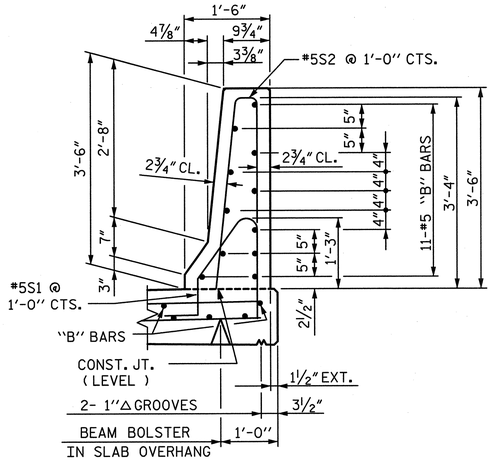

SECTION THRU RAIL

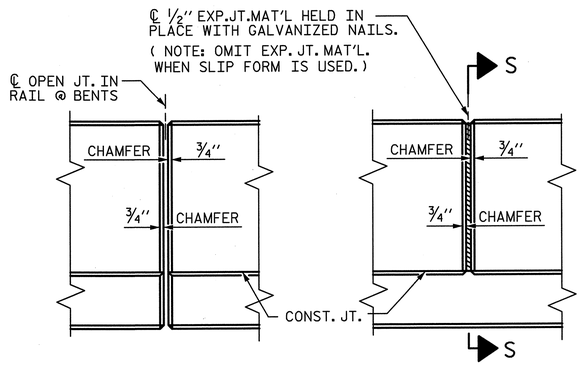

ELEVATION AT EXPANSION JOINTS

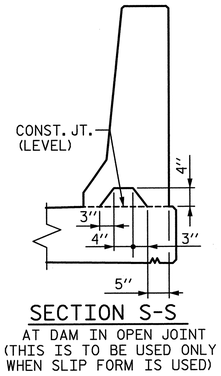

SECTION S-S

AT DAM IN OPEN JOINT
(THIS IS TO BE USED ONLY
WHEN SLIP FORM IS USED)

BARRIER RAIL DETAILS

NOTES

THE BARRIER RAIL IN EACH SPAN SHALL NOT BE CAST UNTIL ALL SLAB CONCRETE IN THAT SPAN HAS BEEN CAST AND HAS REACHED A MINIMUM COMPRESSIVE STRENGTH OF 3,000 PSI.

ALL REINFORCING STEEL IN BARRIER RAILS SHALL BE EPOXY COATED.

GROOVED CONTRACTION JOINTS, ½" IN DEPTH, SHALL BE TOOLED IN ALL EXPOSED FACES OF THE BARRIER RAIL AND IN ACCORDANCE WITH ARTICLE 825-10(B) OF THE STANDARD SPECIFICATIONS. THE CONTRACTION JOINT SHALL BE LOCATED AT EACH THIRD POINT BETWEEN BARRIER RAIL EXPANSION JOINTS. ONLY ONE CONTRACTION JOINT IS REQUIRED AT MIDPOINT OF BARRIER RAIL SEGMENTS LESS THAN 20 FEET IN LENGTH AND NO CONTRACTION JOINTS ARE REQUIRED FOR THOSE SEGMENTS LESS THAN 10 FEET IN LENGTH.

FOR END OF RAIL VIEWS, SEE BRIDGE APPROACH SLAB SHEETS.

BAR TYPES

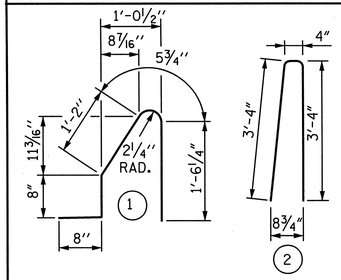

ALL BAR DIMENSIONS ARE OUT TO OUT

BILL OF MATERIAL

FOR CONCRETE BARRIER RAIL ONLY

BAR	NO.	SIZE	TYPE	LENGTH	WEIGHT
✳ B1	66	#5	STR	9'-1"	625
✳ B2	330	#5	STR	24'-7"	8,461
✳ B3	22	#5	STR	7'-11"	182
✳ S1	824	#5	1	4'-6"	3,867
✳ S2	824	#5	2	7'-0"	6,016

✳ EPOXY COATED REINFORCING STEEL	19,151 LBS.
CLASS AA CONCRETE	112.1 CU. YDS.
CONCRETE BARRIER RAIL ▲	843.9 LIN. FT.

▲ BARRIER RAIL ON APPROACH SLAB INCLUDED

PROJECT NO. U-2524C

GUILFORD COUNTY

STATION: POT 6+23.25 -RPCY4-

SHEET 1 OF 3

STATE OF NORTH CAROLINA
DEPARTMENT OF TRANSPORTATION
RALEIGH

CONCRETE
BARRIER RAIL

-RAMP C-

NORTH CAROLINA PROFESSIONAL SEAL 28479 ENGINEER KEVIN G. BAILEY
5-30-13

STV / Ralph Whitehead Associates, Inc.
1000 West Morehead St., Ste. 200
Charlotte, NC 28208
NC License No. F-0991

REVISIONS						SHEET NO.
NO.	BY:	DATE:	NO.	BY:	DATE:	S-652
1			3			TOTAL SHEETS
2			4			83

DRAWN BY : MM DATE : 11-12
CHECKED BY : YT DATE : 11-12
DESIGN ENGINEER OF RECORD: T. TOWNSEND DATE : 5-13

5/29/2013 9:59:45 AM R:\ustation\Finals\(24) Plan of Rails Sheet 1of 3.dgn

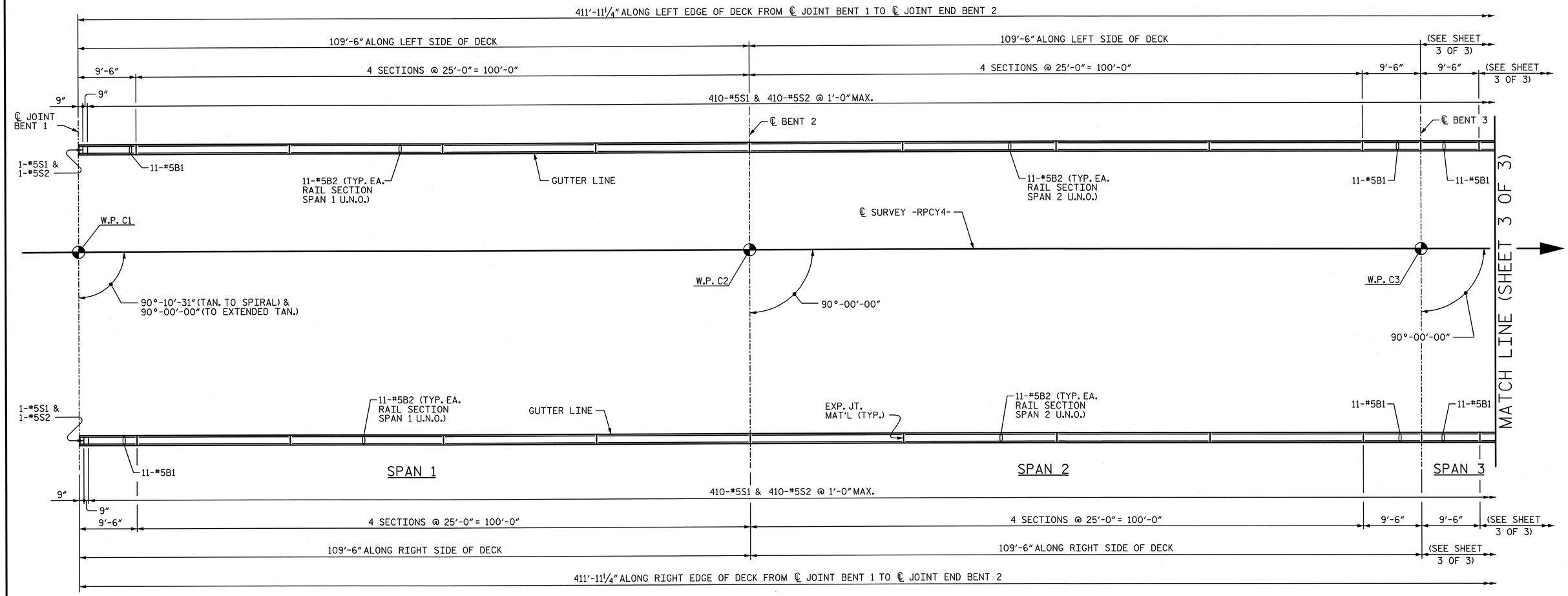

PLAN

PROJECT NO. U-2524C

GUILFORD COUNTY

STATION: POT 6+23.25 -RPCY4-

SHEET 2 OF 3

STATE OF NORTH CAROLINA
DEPARTMENT OF TRANSPORTATION
RALEIGH

PLAN OF RAILS
CONCRETE BARRIER RAIL

-RAMP C-

NORTH CAROLINA PROFESSIONAL ENGINEER SEAL 28479 ENGINEER KEVIN G. BAILEY 5-30-13

REVISIONS						SHEET NO.
NO.	BY:	DATE:	NO.	BY:	DATE:	S-653
1			3			TOTAL SHEETS
2			4			8336

STV / Ralph Whitehead Associates, Inc.
1000 West Morehead St., Ste. 200
Charlotte, NC 28208
NC License No. F-0991

DRAWN BY : MM DATE : 11-12
CHECKED BY : YT DATE : 11-12

DESIGN ENGINEER OF RECORD: T. TOWNSEND DATE : 5-13

5/29/2013 9:59:47 AM R:\station\Finals\(25) Plan of Rails Sheet 2 of 3.dgn

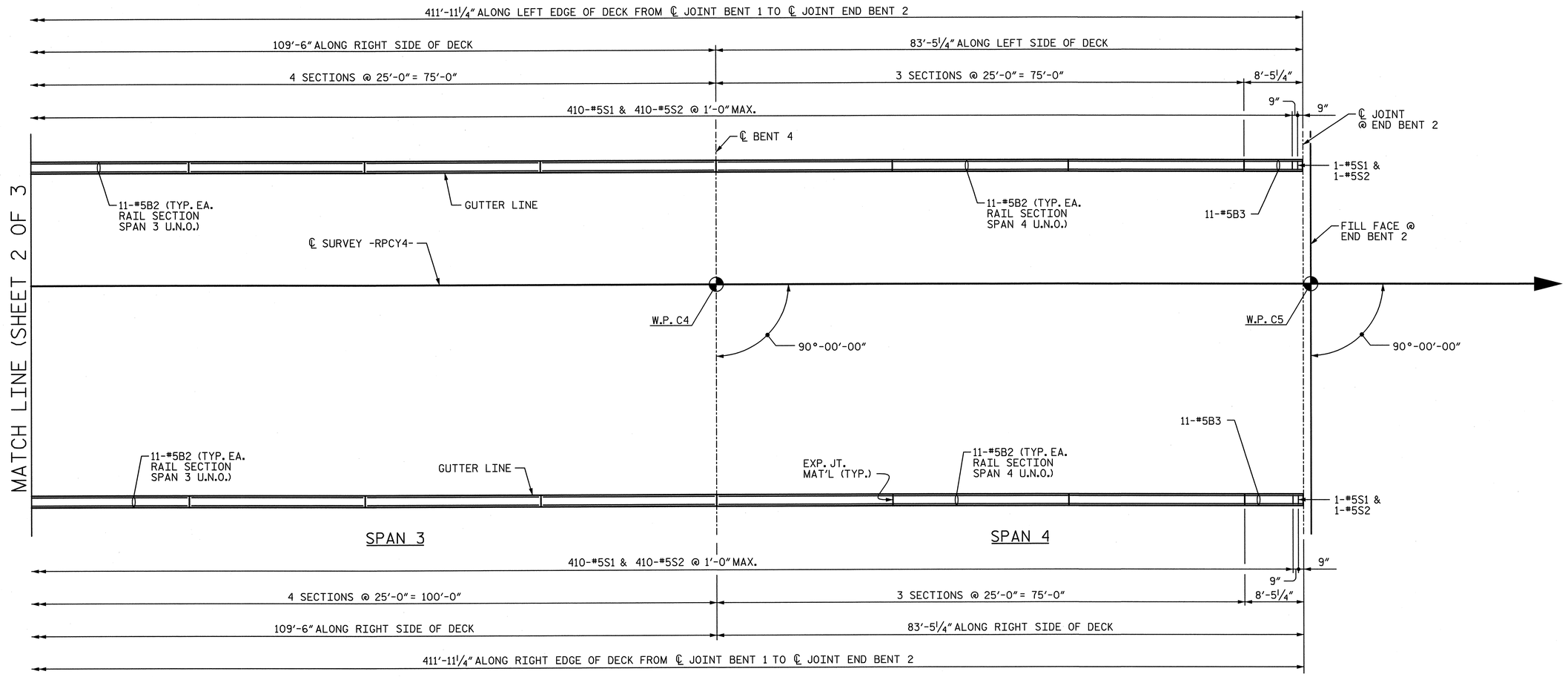

PLAN

PROJECT NO. U-2524C

GUILFORD COUNTY

STATION: POT 6+23.25 -RPCY4-

SHEET 3 OF 3

STATE OF NORTH CAROLINA
DEPARTMENT OF TRANSPORTATION
RALEIGH

PLAN OF RAILS
CONCRETE BARRIER RAIL

-RAMP C-

NORTH CAROLINA PROFESSIONAL ENGINEER SEAL 28479 KEVIN G. BAILEY 5-30-13

REVISIONS						SHEET NO.
NO.	BY:	DATE:	NO.	BY:	DATE:	S-654
1			3			TOTAL SHEETS
2			4			836

STV / Ralph Whitehead Associates, Inc.
1000 West Morehead St., Ste. 200
Charlotte, NC 28208
NC License No. F-0991

DRAWN BY : MM	DATE : 11-12	DESIGN ENGINEER OF RECORD: T. TOWNSEND	DATE : 5-13
CHECKED BY : YT	DATE : 11-12		

5/29/2013 9:59:49 AM R:\station\Finals\(26) Plan of Rails Sheet 3 of 3.dgn

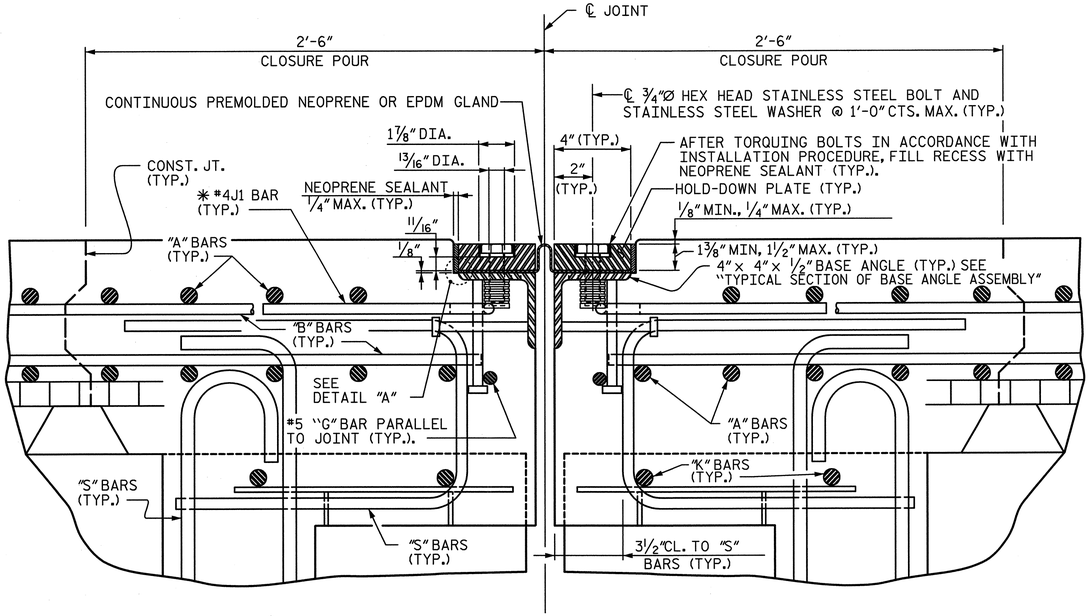

EXPANSION JOINT DETAILS - BENT 1

(SECTION NORMAL TO JOINT -- PRESTRESSED GIRDER SUPERSTRUCTURE)

* THE QUANTITY OF #4J1 BARS ON THE BILL OF MATERIAL IS BASED ON 1'-0" CENTERS. J1 BARS SHALL BE PLACED AT EACH VERTICAL STUD ANCHOR BOLT. IN THE EVENT THAT THE NUMBER OF VERTICAL STUD ANCHORS EXCEEDS THE NUMBER OF J1 BARS SPECIFIED, ADDITIONAL J1 BARS WILL NOT BE REQUIRED.

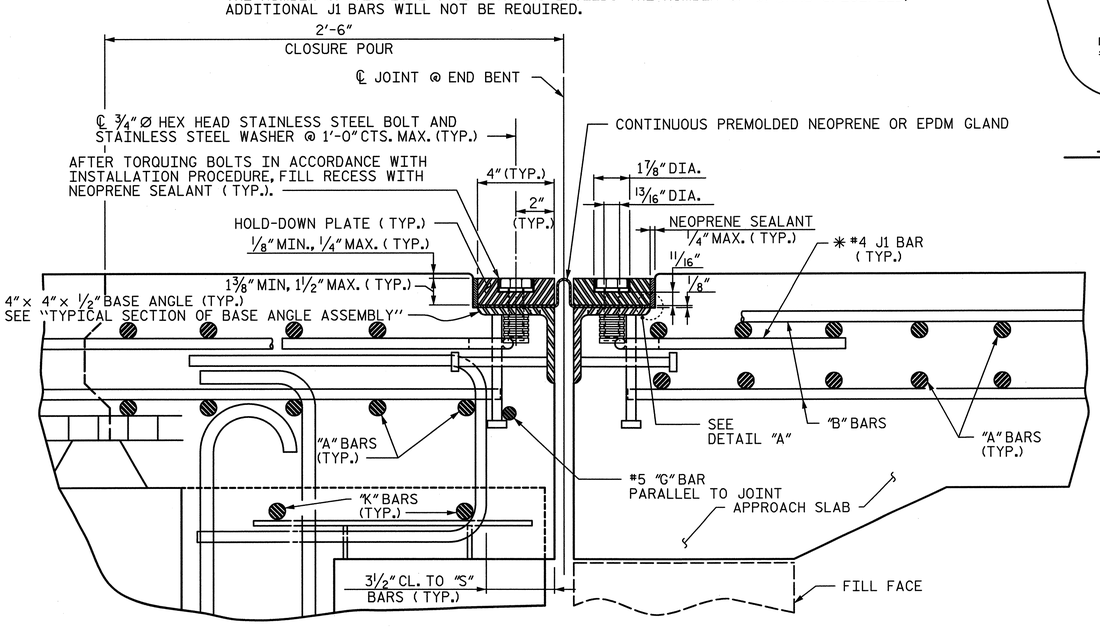

EXPANSION JOINT DETAILS - END BENT 2

(SECTION NORMAL TO JOINT -- PRESTRESSED GIRDER SUPERSTRUCTURE)

* THE QUANTITY OF #4 J1 BARS ON THE BILL OF MATERIAL IS BASED ON 1'-0" CENTERS. J1 BARS SHALL BE PLACED AT EACH VERTICAL STUD ANCHOR BOLT. IN THE EVENT THAT THE NUMBER OF VERTICAL STUD ANCHORS EXCEEDS THE NUMBER OF J1 BARS SPECIFIED, ADDITIONAL J1 BARS WILL NOT BE REQUIRED.

DRAWN BY : CLG	DATE : 5-13
CHECKED BY : TRL	DATE : 5-13
DESIGN ENGINEER OF RECORD: K. BAILEY	DATE : 5-13

INSTALLATION PROCEDURE

1. A TEMPLATE OR OTHER SUITABLE DEVICE SHALL BE USED TO FORM THE TOP OF THE EXPANSION JOINT SEAL BLOCKOUT TO THE PROPER DEPTH AND WIDTH. THE TEMPLATE SHALL BE 4⅛" TO 4¼" WIDE AND OF SUCH THICKNESS AS TO PROVIDE FOR CORRECT FINAL ELEVATION OF TOP OF HOLD-DOWN PLATES. THE TEMPLATE SHALL BE ATTACHED TO THE BASE ANGLE ASSEMBLY WITH THE ¾"Ø HEX HEAD BOLTS PROVIDED FOR THE HOLD-DOWN PLATES. A 1"Ø HOLE SHALL BE PROVIDED IN THE TEMPLATE CENTERED OVER EACH WEEP HOLE IN THE 4"X 4"X ½" BASE ANGLE. OTHER METHODS OF INSURING DRAINAGE THROUGH WEEP HOLES MAY BE EMPLOYED SUBJECT TO ENGINEER'S APPROVAL.
2. AFTER THE CONCRETE HAS BEEN CAST ON BOTH SIDES OF THE JOINT, REMOVE THE TEMPLATE. THOROUGHLY CLEAN THE BOLT HOLES AND THE ANGLE PLATE. REMOVE ANY EXCESS CONCRETE THAT COMES OUT OF THE WEEP HOLES. ANY DAMAGED STEEL SHALL BE COATED WITH A MINIMUM THICKNESS OF 4 DRY MILS OF ZINC-RICH PAINT IN ACCORDANCE WITH THE STANDARD SPECIFICATIONS.
3. LAY THE GLAND ON THE BASE ANGLE AND FIELD MARK THE GLAND FOR THE BOLT HOLES. HOLES IN THE GLAND SHALL BE PUNCHED ⅛" IN DIAMETER WITH A HAND PUNCH.
4. IN ORDER TO CHECK FOR PROPER ALIGNMENT, PLACE THE GLAND AND HOLD-DOWN PLATES ON THE BASE ANGLE. DO NOT APPLY NEOPRENE SEALANT. BOLT THE HOLD-DOWN PLATES TO THE BASE ANGLE BUT DO NOT TIGHTEN. THE ENGINEER SHALL INSPECT THE JOINT SEAL DEVICE FOR PROPER ALIGNMENT.
5. AFTER INSPECTION, REMOVE THE HOLD-DOWN PLATES AND GLAND. APPLY NEOPRENE SEALANT TO THE BASE ANGLE IN ACCORDANCE WITH THE "INSTALLATION SKETCH". PLACE GLAND AND HOLD-DOWN PLATES ON THE BASE ANGLE. BOLT THE HOLD-DOWN PLATES TO THE BASE ANGLE ASSEMBLY AND TORQUE THE BOLTS TO 88 FT-LBS WITH A TORQUE WRENCH. CHECK THE TORQUE AFTER THREE (3) HOURS AND, IF NECESSARY, RETIGHTEN TO 88 FT-LBS. A FINAL CHECK SHALL BE MADE AT SEVEN (7) DAYS. TORQUE SHALL NOT BE LESS THAN 80 FT-LBS AFTER SEVEN (7) DAYS.
6. AFTER PROPER TORQUING, CLEAN THE BOLT HOLE RECESSES AND THE RECESS BETWEEN THE JOINT SEAL DEVICE AND CONCRETE, COMPLETELY FILL THESE RECESSES WITH NEOPRENE SEALANT.

NOTES:

1. FOR EXPANSION JOINT SEALS, SEE SPECIAL PROVISIONS.
2. ALL PLATES AND ANGLES SHALL CONFORM TO AASHTO M270 GRADE 36 STEEL OR APPROVED EQUAL. ALL HOLD-DOWN BOLTS SHALL CONFORM TO ASTM F593 ALLOY 304 STAINLESS STEEL AND WASHERS SHALL CONFORM TO ASTM F844 EXCEPT THEY SHALL BE MADE FROM ALLOY 304 STAINLESS STEEL. ALL STUD ANCHORS SHALL CONFORM TO AASHTO M169, GRADES 1010 THRU 1020 OR APPROVED EQUAL. ALL CONCRETE INSERTS SHALL BE CLOSED END AND SHALL CONFORM TO AASHTO M169, GRADE 12L14. TENSILE CAPACITY SHALL BE 3000 LBS. MIN.
3. A PREMOLDED CORRUGATED OR NON-CORRUGATED GLAND SHALL BE USED FOR JOINTS SKEWED BETWEEN 50° THRU 130°. FOR JOINTS SKEWED LESS THAN 50° OR MORE THAN 130°, ONLY A CORRUGATED GLAND SHALL BE USED.
4. CLOSED END FERRULES AND STUD ANCHORS SHALL BE SHOP WELDED AND ALL HOLES SHALL BE SHOP DRILLED AS SHOWN ON PLANS. STUD ANCHORS SHALL BE ELECTRIC ARC END WELDED WITH COMPLETE FUSION.
5. SURFACES COMING IN CONTACT WITH NEOPRENE SHALL BE GROUND SMOOTH PRIOR TO METALLIZING.
6. UPON COMPLETION OF SHOP FABRICATION, THE HOLD DOWN PLATE AND BASE ANGLE ASSEMBLY, AS SHOWN IN THE "TYPICAL SECTION OF BASE ANGLE ASSEMBLY", SHALL BE METALLIZED. SEE SPECIAL PROVISION FOR THERMAL SPRAYED COATINGS (METALLIZATION).
7. BASE ANGLE ASSEMBLY SHALL BE CONTINUOUS FOR THE LENGTH OF THE JOINT. AT CROWN BREAKS, THE ENDS OF THE BASE ANGLE ASSEMBLY SHALL BE CUT PARALLEL TO THE BRIDGE CENTERLINE FOR SKEWS LESS THAN 80° AND GREATER THAN 100°. FINISHED WELD SHALL BE GROUND SMOOTH AND COATED WITH A MINIMUM THICKNESS OF 4 DRY MILS OF ZINC-RICH PAINT IN ACCORDANCE WITH THE STANDARD SPECIFICATIONS.
8. FIELD SPLICES OF HOLD-DOWN PLATES SHALL BE KEPT TO A MINIMUM. CONTRACTOR SHALL FURNISH DETAILED PLANS SHOWING PROPOSED SPLICE LOCATIONS FOR APPROVAL. HOLD-DOWN PLATES SHALL NOT EXCEED 20' LENGTHS UNLESS APPROVED BY THE ENGINEER.
9. NO ALTERNATE JOINT DETAILS SHALL BE PERMITTED IN LIEU OF THOSE SHOWN ON THESE PLANS.
10. THE CONTRACTOR MAY, AT HIS OPTION, USE ADHESIVELY ANCHORED ANCHOR BOLTS IN PLACE OF CONCRETE INSERTS FOR COVER PLATES. THE YIELD LOAD OF THE ¾"Ø BOLT IS 10 KIPS. FIELD TESTING OF THE ADHESIVE BONDING SYSTEM IS NOT REQUIRED.

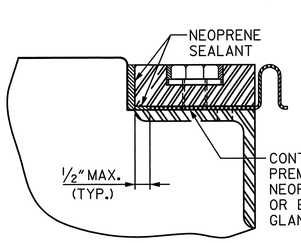

DETAIL "A"

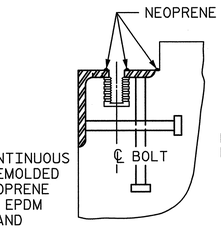

CROSS SECTION

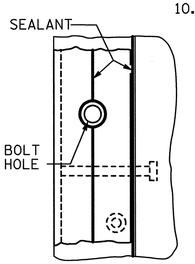

PLAN VIEW

INSTALLATION SKETCH

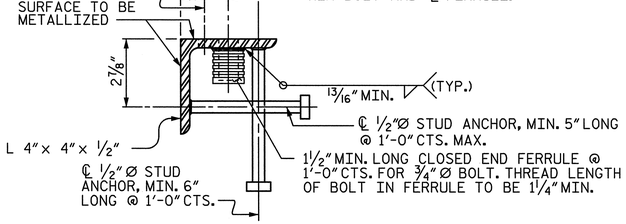

TYPICAL SECTION OF BASE ANGLE ASSEMBLY

MOVEMENT AND SETTING AT JOINT

BENT NO.	SKEW ANGLE	TOTAL MOVEMENT (ALONG ℄ RDWY.)	PERPENDICULAR JOINT OPENING AT 45°F	PERPENDICULAR JOINT OPENING AT 60°F	PERPENDICULAR JOINT OPENING AT 90°F
B1	●90°-00'-00"	1¼"	1⅞"	1 11/16"	1¼"
EB2	90°-00'-00"	1¼"	1⅞"	1 11/16"	1¼"

● ANGLE TO EXTENDED TANGENT

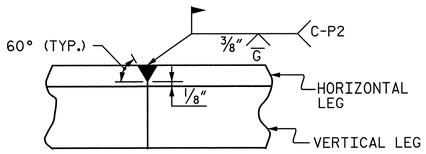

DETAIL- FIELD WELD SPLICE OF BASE ANGLE

NORTH CAROLINA PROFESSIONAL ENGINEER SEAL 28479 KEVIN G. BAILEY 5-30-13

STV / Ralph Whitehead Associates, Inc.
1000 West Morehead St., Ste. 200
Charlotte, NC 28208
NC License No. F-0991

PROJECT NO. U-2524C
GUILFORD COUNTY
STATION: POT 6+23.25 -RPCY4-

SHEET 1 OF 3

STATE OF NORTH CAROLINA
DEPARTMENT OF TRANSPORTATION
RALEIGH

EXPANSION JOINT SEAL DETAILS

-RAMP C-

REVISIONS						SHEET NO.
NO.	BY:	DATE:	NO.	BY:	DATE:	S-655
1			3			TOTAL SHEETS
2			4			836

5/29/2013 9:59:54 AM R:\ustation\Finals\127) Expansion Joint Details 1of 3.dgn

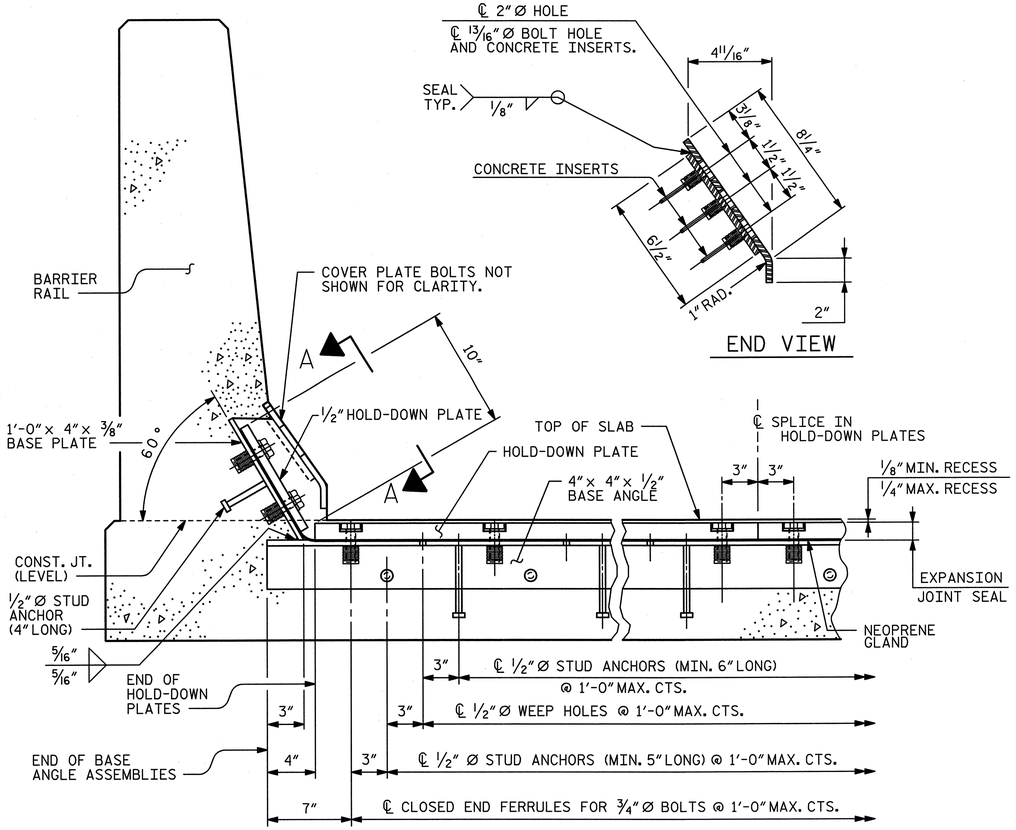

SECTION THRU RAIL NORMAL TO JOINT

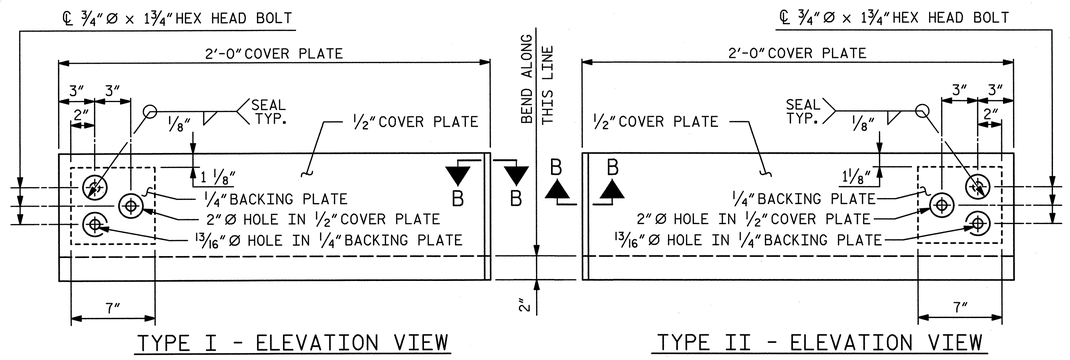

TYPE I - ELEVATION VIEW

TYPE II - ELEVATION VIEW

COVER PLATE DETAILS

NOTES:

1. FOR PAVEMENT MARKING ALIGNMENT, SEE "PAVEMENT MARKING ALIGNMENT" SHEET

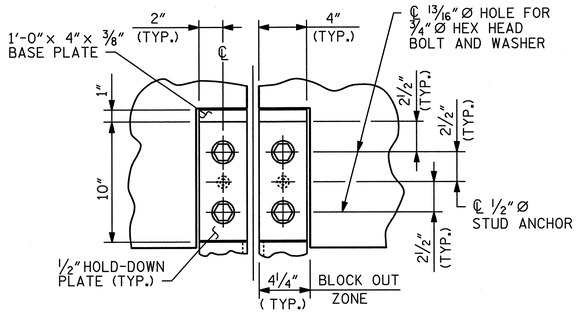

SECTION A - A

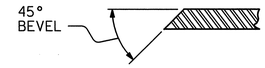

SECTION B - B

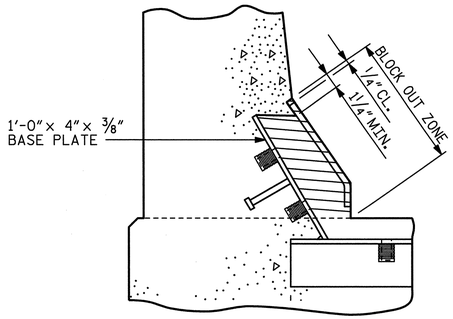

BLOCK OUT DETAIL

SEE "SECTION A-A" FOR OTHER DETAILS.

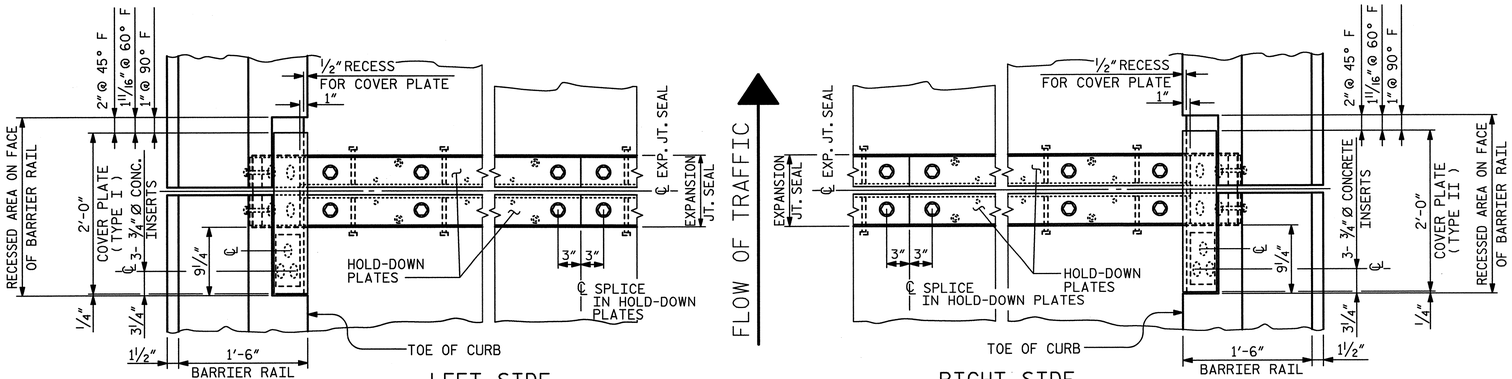

LEFT SIDE

RIGHT SIDE

PLAN OF EXPANSION JOINT SEAL

(FOR BENT 1 AND END BENT 2)

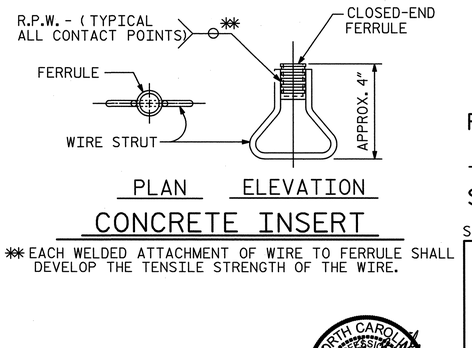

PLAN ELEVATION

CONCRETE INSERT

** EACH WELDED ATTACHMENT OF WIRE TO FERRULE SHALL DEVELOP THE TENSILE STRENGTH OF THE WIRE.

PROJECT NO. U-2524C

GUILFORD COUNTY

STATION: POT 6+23.25 -RPCY4-

SHEET 2 OF 3

STATE OF NORTH CAROLINA
DEPARTMENT OF TRANSPORTATION
RALEIGH

EXPANSION JOINT SEAL DETAILS FOR BARRIER RAIL

-RAMP C-

NORTH CAROLINA PROFESSIONAL SEAL 28479 ENGINEER KEVIN G. BAILEY 5-30-13

REVISIONS						SHEET NO.
NO.	BY:	DATE:	NO.	BY:	DATE:	S-656
1			3			TOTAL SHEETS
2			4			836

STV / Ralph Whitehead Associates, Inc.
1000 West Morehead St., Ste. 200
Charlotte, NC 28208
NC License No. F-0991

DRAWN BY : CLG	DATE : 5-13	DESIGN ENGINEER OF RECORD: K. BAILEY	DATE : 5-13
CHECKED BY : TRL	DATE : 5-13		

5/29/2013 9:59:57 AM R:\station\Finals\28 Expansion Joint Details 2 of 3.dgn

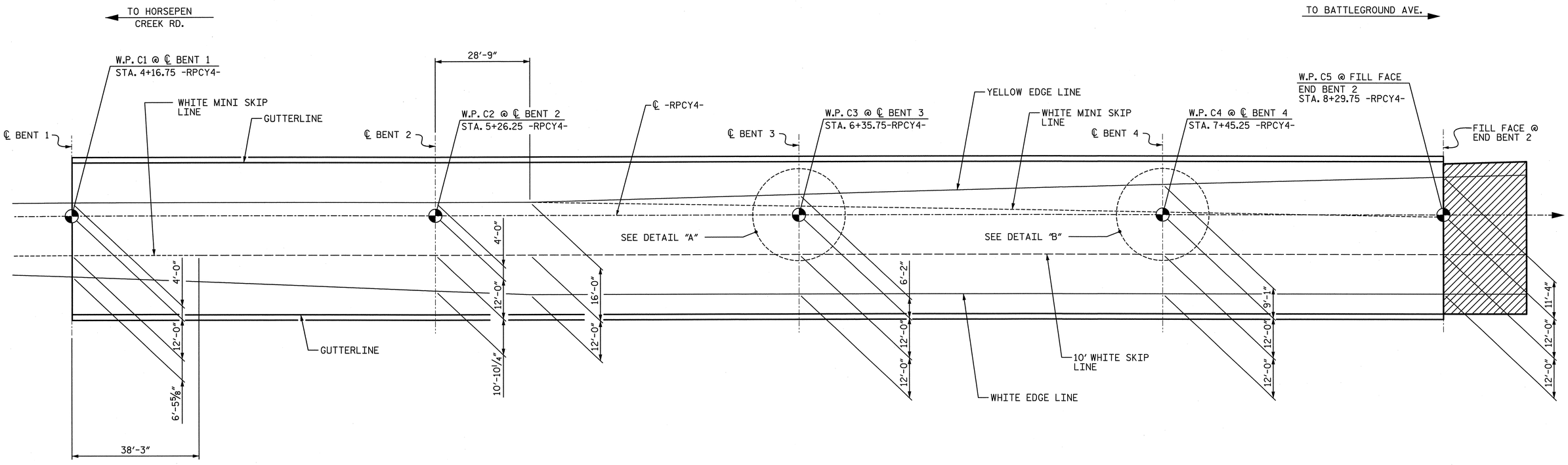

PAVEMENT MARKING ALIGNMENT

NOTES:

1. FOR ADDITONAL DETAILS & MATERIALS, SEE PAVEMENT MARKING PLANS.
2. FOR PAY ITEM FOR PAVEMENT MARKING, SEE ROADWAY PLANS.

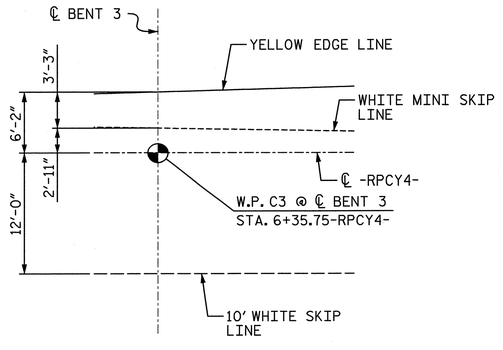

DETAIL "A"

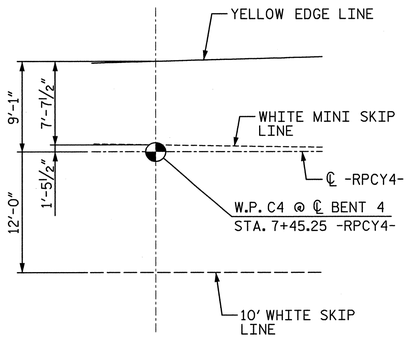

DETAIL "B"

PROJECT NO. U-2524C

GUILFORD COUNTY

STATION: POT 6+23.25 -RPCY4-

SHEET 3 OF 3

STATE OF NORTH CAROLINA
DEPARTMENT OF TRANSPORTATION
RALEIGH

PAVEMENT MARKING ALIGNMENT

-RAMP C-

NORTH CAROLINA PROFESSIONAL SEAL 28479 ENGINEER KEVIN G. BAILEY 5-30-13

DRAWN BY : MM	DATE : 11-12	DESIGN ENGINEER OF RECORD: K. BAILEY	DATE : 5-13
CHECKED BY : YT	DATE : 11-12		

STV / Ralph Whitehead Associates, Inc.
1000 West Morehead St., Ste. 200
Charlotte, NC 28208
NC License No. F-0991

REVISIONS					
NO.	BY:	DATE:	NO.	BY:	DATE:
1			3		
2			4		

SHEET NO. S-657

TOTAL SHEETS 8360

5/29/2013 10:00:00 AM R:\ustation\Finals\(29) Pavement Marking Alignment.dgn

REINFORCING BAR SCHEDULE FOR RAMP C

BAR	NO.	SIZE	TYPE	LENGTH	WEIGHT
✳A1	705	5	STR	48′-11″	35,969
A301	705	5	STR	48′-11″	35,969
✳B1	70	5	STR	42′-2″	3,079
✳B2	105	7	STR	60′-0″	12,877
✳B3	70	5	STR	54′-6″	3,979
✳B4	35	5	STR	55′-9″	2,035
✳B10	96	7	STR	50′-0″	9,811
✳B11	96	7	STR	40′-0″	7,849
B101	96	5	STR	42′-0″	4,205
B102	144	7	STR	60′-0″	17,660
B103	96	5	STR	56′-0″	5,607
B104	48	5	STR	58′-10″	2,945
✳G1	2	5	STR	48′-11″	102
✳J1	90	4	⑦	1′-5″	85
✳K1	12	8	②	22′-8″	726
✳K2	8	8	①	15′-3″	326
✳K3	16	6	STR	6′-4″	152
K120	24	4	STR	6′-7″	106
K121	120	4	STR	9′-4″	748
K122	24	4	STR	6′-4″	102
K123	21	4	STR	41′-3″	579
✳S1	64	5	③	6′-0″	401
✳S2	64	4	⑥	2′-6″	107
S3	672	4	⑤	2′-9″	1,234
U1	96	4	④	16′-6″	1,058
U2	24	4	⑥	10′-2″	184

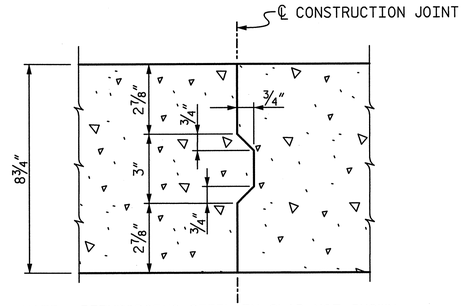

NOTE : REINFORCING STEEL IN SLAB NOT SHOWN. TRANSVERSE & LONGITUDINAL REINFORCING STEEL SHALL BE CONTINUOUS THROUGH JOINT.

CONSTRUCTION JOINT IN DECK SLAB

SUPERSTRUCTURE REINFORCING STEEL LENGTHS ARE BASED ON THE FOLLOWING MINIMUM SPLICE LENGTHS

BAR SIZE	SUPERSTRUCTURE EXCEPT APPROACH SLABS, PARAPET, AND BARRIER RAIL		APPROACH SLABS		PARAPET AND BARRIER RAIL
	EPOXY COATED	UNCOATED	EPOXY COATED	UNCOATED	
#4	2′-0″	1′-9″	2′-0″	1′-9″	2′-9″
#5	2′-6″	2′-2″	2′-6″	2′-2″	3′-5″
#6	3′-0″	2′-7″	3′-10″	2′-7″	4′-4″
#7	5′-3″	3′-6″			
#8	6′-10″	4′-7″			

GROOVING BRIDGE FLOORS

APPROACH SLAB	1,023	SQ.FT.
BRIDGE DECK	17,667	SQ.FT.
TOTAL	18,690	SQ.FT.

NOTES:

1. NO CLOSURE POURS SHALL OCCUR UNTIL THE CONCRETE IN ADJACENT SPANS HAVE OBTAINED A STRENGTH OF 3000 PSI.

BAR TYPES

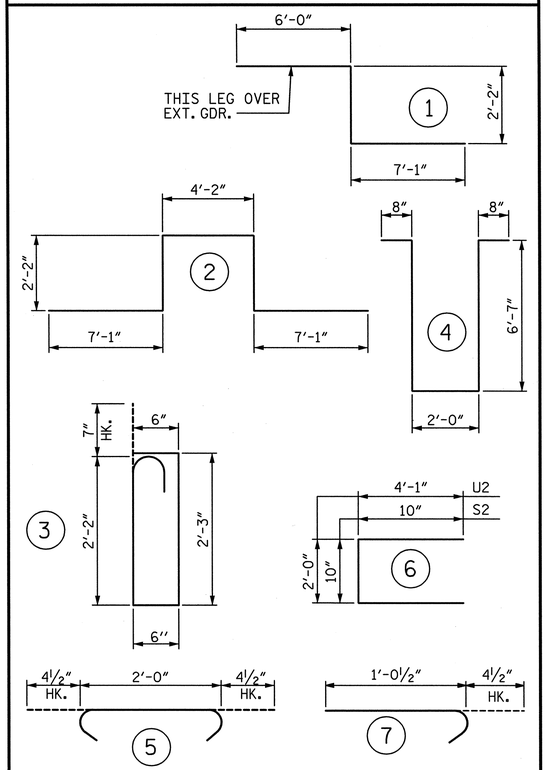

ALL BAR DIMENSIONS ARE OUT TO OUT

SUPERSTRUCTURE BILL OF MATERIAL

	CLASS AA CONCRETE	REINFORCING STEEL	EPOXY COATED REINFORCING STEEL
	(CU. YDS.)	(LBS.)	(LBS.)
POUR 1	126.4	-	-
POUR 2	163.3	-	-
POUR 3	163.3	-	-
POUR 4	171.0	-	-
POUR 5	44.1	-	-
POUR 6	44.1	-	-
POUR 7	44.1	-	-
POUR 8	6.4	-	-
POUR 9	6.4	-	-
TOTALS✳✳	769.1	70,397	77,498

✳✳QUANTITIES FOR BARRIER RAIL ARE NOT INCLUDED

PROJECT NO. U-2524C

GUILFORD COUNTY

STATION: POT 6+23.25 -RPCY4-

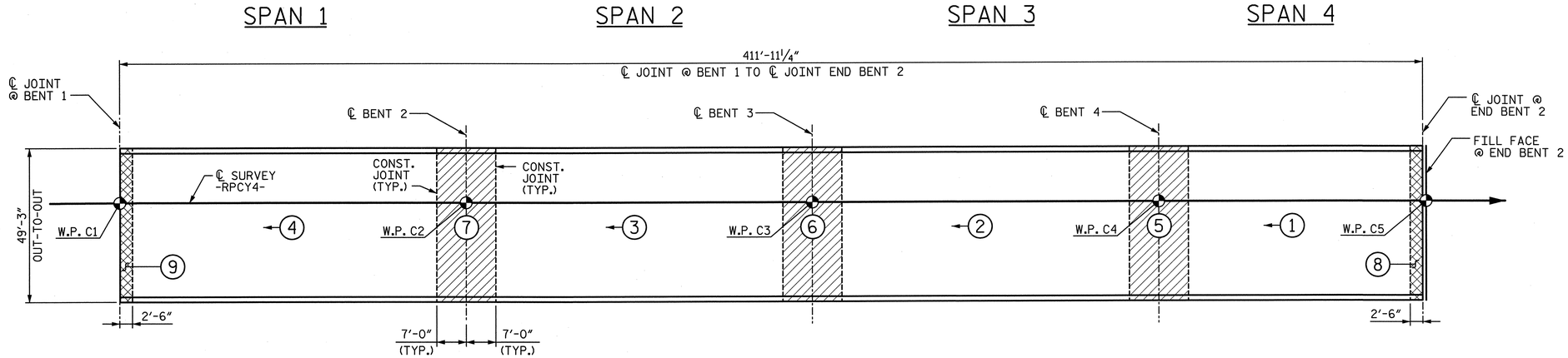

SPAN 1 SPAN 2 SPAN 3 SPAN 4

POUR SEQUENCE AND LAYOUT FOR COMPUTING AREA REINFORCED CONCRETE DECK SLAB (SQ. FT. = 20,283.8)

NOTE: AT THE CONTRACTOR'S OPTION, POUR 5 MAY BE POURED WITH POUR 2, POUR 6 MAY BE POURED WITH POUR 3 AND POUR 7 MAY BE POURED WITH POUR 4.

LEGEND:

- DECK CLOSURE POUR AT JOINTS
- DECK CLOSURE POUR AT CONTINUOUS BENTS
- (1) POUR NUMBER
- DIRECTION OF POUR

NORTH CAROLINA PROFESSIONAL ENGINEER SEAL 28479 KEVIN G. BAILEY 5-30-13

STATE OF NORTH CAROLINA
DEPARTMENT OF TRANSPORTATION
RALEIGH

SUPERSTRUCTURE BILL OF MATERIAL

-RAMP C-

DRAWN BY : MM	DATE : 11-12	DESIGN ENGINEER OF RECORD: K. BAILEY	DATE : 5-13
CHECKED BY : YT	DATE : 11-12		

STV / Ralph Whitehead Associates, Inc.
1000 West Morehead St., Ste. 200
Charlotte, NC 28208
NC License No. F-0991

REVISIONS						SHEET NO.
NO.	BY:	DATE:	NO.	BY:	DATE:	S-658
1			3			TOTAL SHEETS
2			4			836

5/29/2013 10:00:02 AM R:\station\Finals\30) Superstructure BOM.dgn

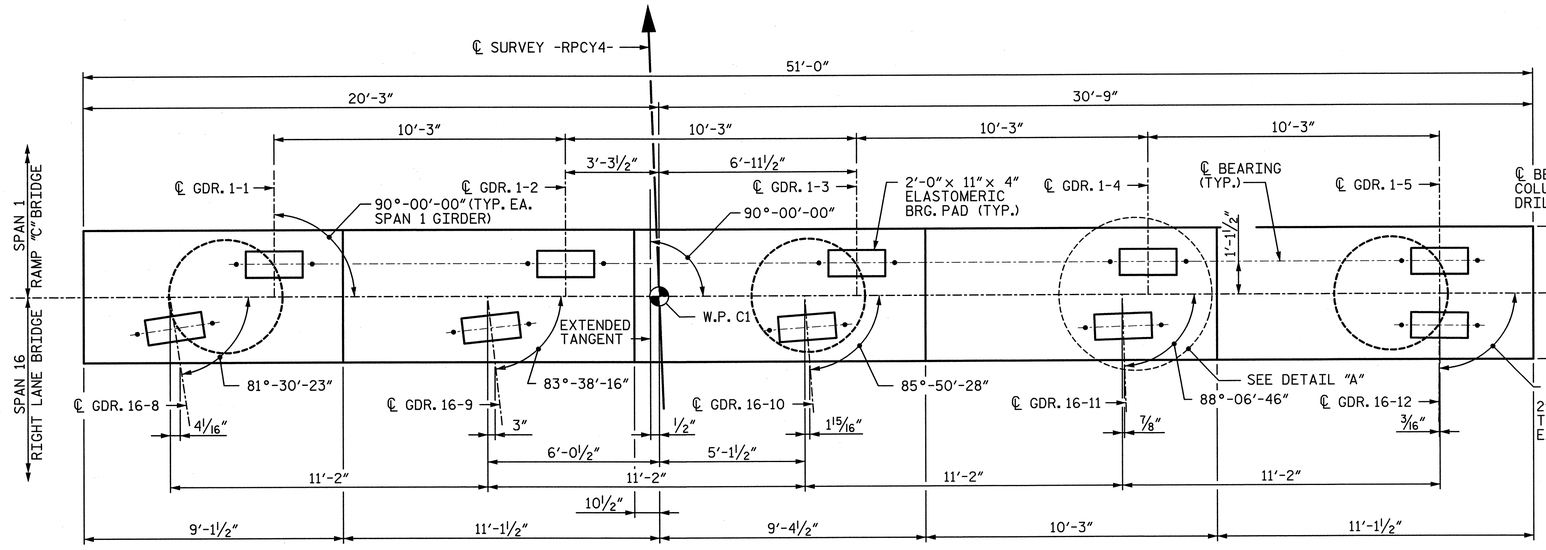

PLAN

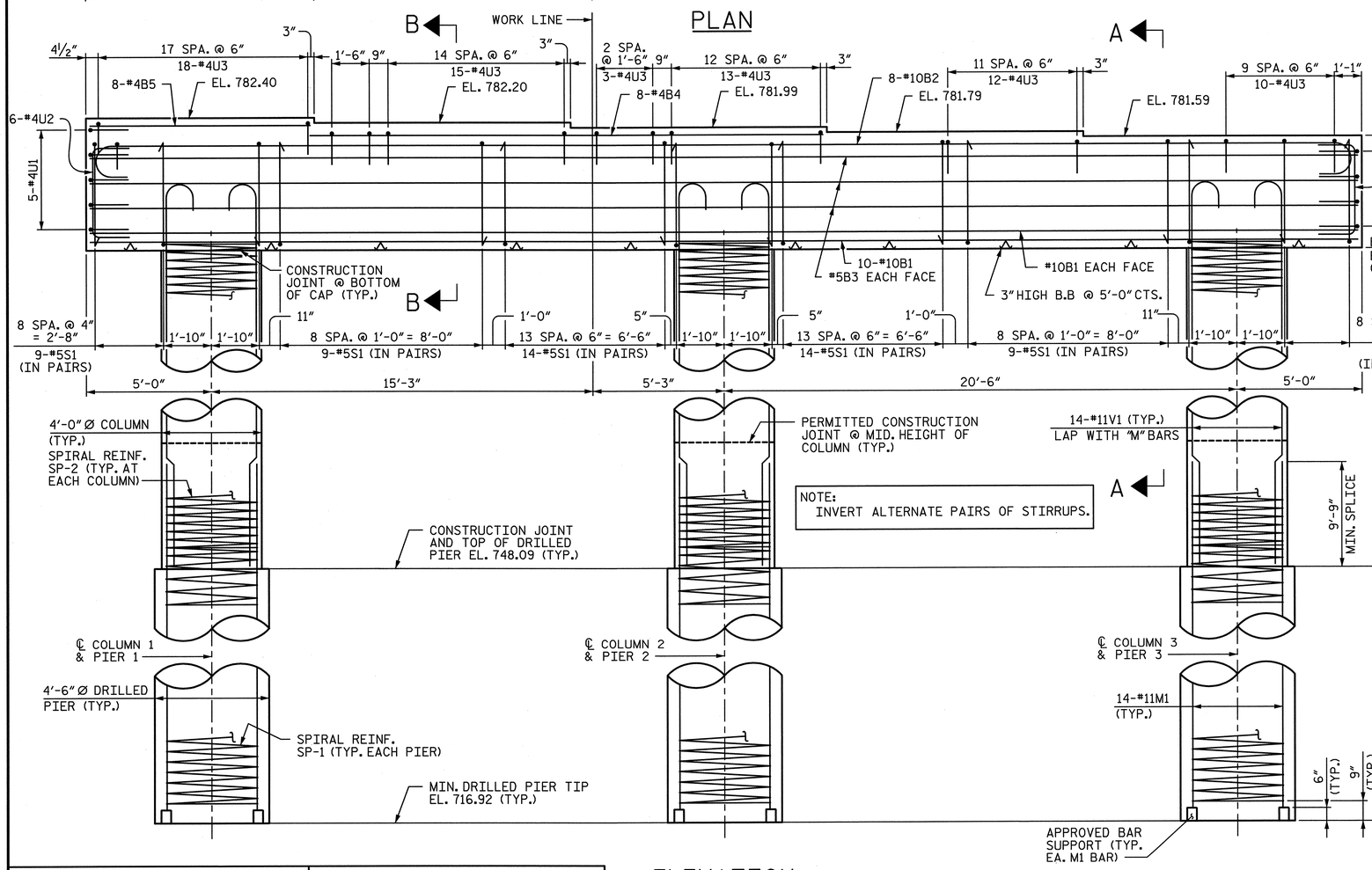

ELEVATION

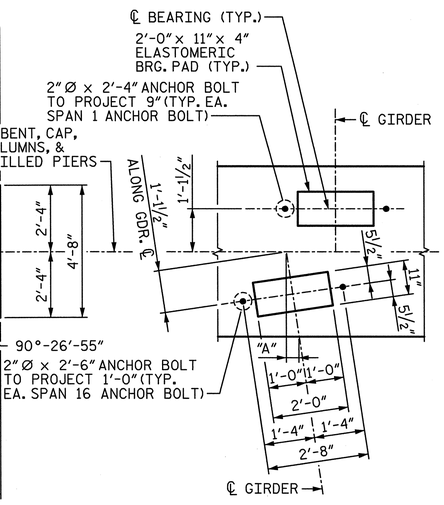

DETAIL "A"

(TYP AT EACH BRIDGE SEAT)

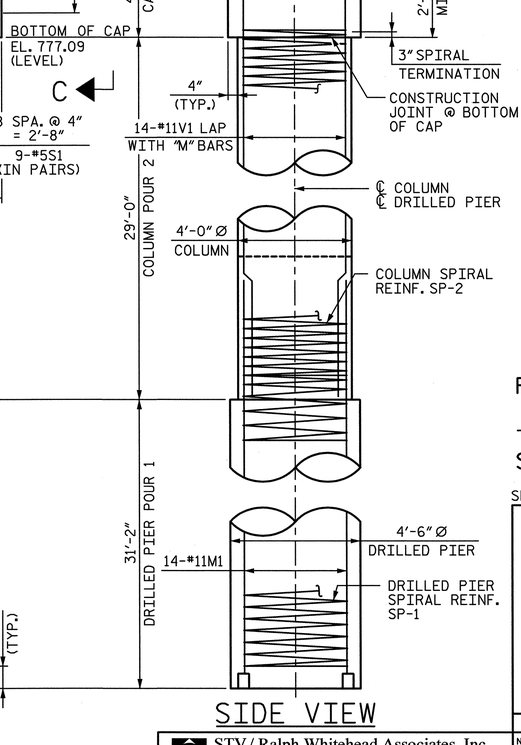

SIDE VIEW

NOTES:

1. ALL REINFORCING STEEL IN THE DRILLED PIERS IS INCLUDED IN THE PAY ITEMS FOR "REINFORCING STEEL" AND "SPIRAL COLUMN REINFORCING STEEL".
2. THE LOCATION OF THE CONSTRUCTION JOINT IN THE DRILLED PIERS IS BASED ON AN APPROXIMATE GROUND LINE ELEVATION. IF THE CONSTRUCTION JOINT IS ABOVE THE ACTUAL GROUND ELEVATION, THE CONTRACTOR SHALL PLACE THE CONSTRUCTION JOINT 1 FOOT BELOW THE GROUND LINE.
3. STIRRUPS AND "U BARS" IN CAP MAY BE SHIFTED SLIGHTLY AS NECESSARY TO CLEAR ANCHOR BOLTS.
4. HOOKS ON "V" BARS MAY BE TURNED AS NECESSARY FOR PLACING REINFORCING STEEL.
5. A CONSTRUCTION JOINT AT MID-HEIGHT OF COLUMN IS PERMITTED.
6. FOR 2" Ø ANCHOR BOLTS, SEE "ELASTOMERIC BEARING DETAILS" SHEET.
7. SEE GENERAL DRAWING SHEET 5 OF 5 FOR ADDITIONAL NOTES.
8. SEE SHEET 2 OF 2 FOR SECTIONS ON ELEVATION VIEW.
9. THE TOP SURFACE AREAS OF THE BENT CAPS SHALL BE CURED IN ACCORDANCE WITH THE STANDARD SPECIFICATIONS EXCEPT THE MEMBRANE CURING COMPOUND METHOD SHALL NOT BE USED.

DIMENSIONS	"A"
GDR. 16-8	4 1/16"
GDR. 16-9	3"
GDR. 16-10	1 15/16"
GDR. 16-11	⅞"
GDR. 16-12	-3/16"

NORTH CAROLINA PROFESSIONAL ENGINEER SEAL 28479 ENGINEER KEVIN G. BAILEY
5-30-13

PROJECT NO. U-2524C

GUILFORD COUNTY

STATION: POT 6+23.25 -RPCY4-

SHEET 1 OF 2

STATE OF NORTH CAROLINA
DEPARTMENT OF TRANSPORTATION
RALEIGH

SUBSTRUCTURE BENT 1 PLAN & ELEVATION

-RAMP C-

REVISIONS						SHEET NO.
NO.	BY:	DATE:	NO.	BY:	DATE:	S-659
1			3			TOTAL SHEETS
2			4			834

STV / Ralph Whitehead Associates, Inc.
1000 West Morehead St., Ste. 200
Charlotte, NC 28208
NC License No. F-0991

DRAWN BY : VMW DATE : 2-13
CHECKED BY : MFR DATE : 3-13
DESIGN ENGINEER OF RECORD: M. ROBBINS DATE : 5-13

5/29/2013 10:00:04 AM R:\station\Finals\(31) Bents 1- Sheet 1of 2.dgn

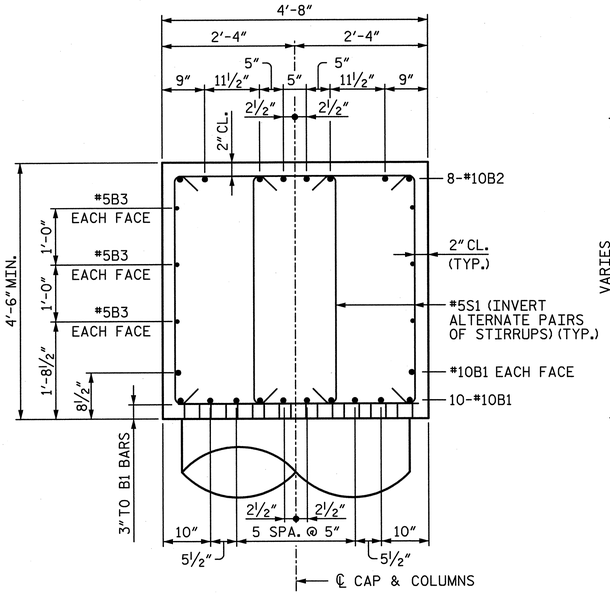

SECTION A-A

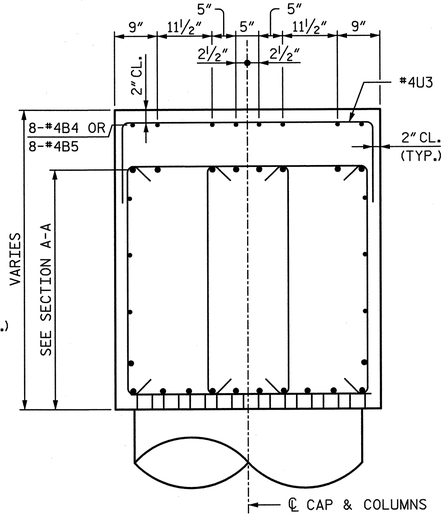

SECTION B-B

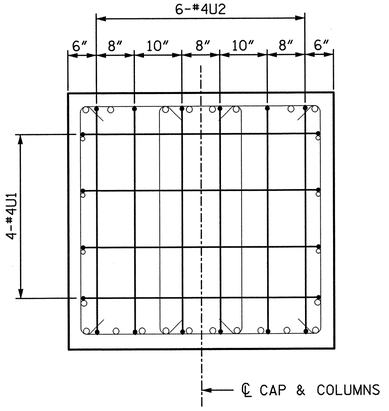

END VIEW C-C

(RIGHT END SHOWN, LEFT END SIMILAR)

BAR TYPES

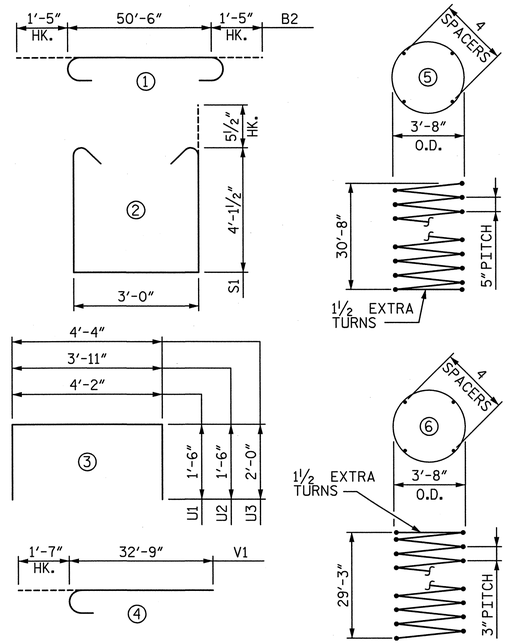

ALL BAR DIMENSIONS ARE OUT TO OUT

BILL OF MATERIAL FOR BENT 1

BAR	NO.	SIZE	TYPE	LENGTH	WEIGHT
B1	12	#10	STR.	50'-8"	2,616
B2	8	#10	①	53'-4"	1,836
B3	6	#5	STR.	50'-8"	317
B4	8	#4	STR.	20'-6"	110
B5	8	#4	STR.	8'-9"	47
M1	42	#11	STR.	40'-5"	9,019
S1	136	#5	②	12'-2"	1,726
U1	9	#4	③	7'-2"	43
U2	12	#4	③	6'-11"	55
U3	73	#4	③	8'-4"	406
V1	42	#11	④	34'-4"	7,661
SP-1	3	✻✻	⑤	862'-4"	2,698
SP-2	3	✻	⑥	1355'-7"	2,717

✻✻ THE SP-1 SPIRAL REINFORCING STEEL SHALL BE W31 OR D-31 COLD DRAWN WIRE OR #5 PLAIN OR DEFORMED BAR WITH A 5" PITCH.

✻ THE SP-2 SPIRAL REINFORCING SHALL BE W20 OR D-20 COLD DRAWN WIRE OR #4 PLAIN OR DEFORMED BAR WITH A 3" PITCH.

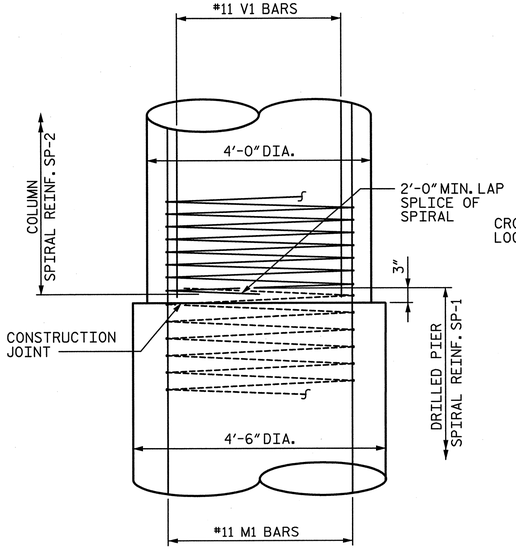

CONSTRUCTION JOINT DETAIL

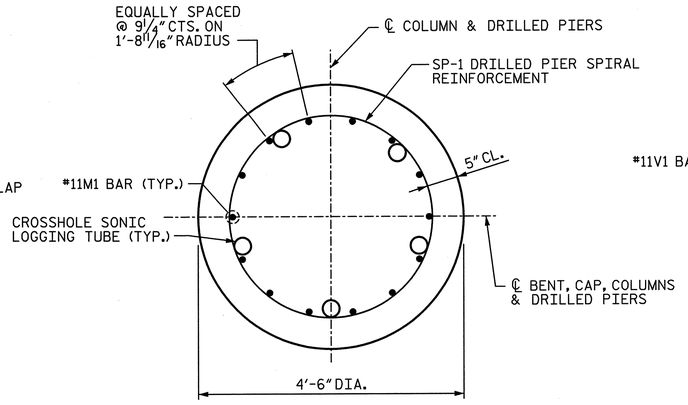

TYPICAL SECTION THROUGH DRILLED PIER

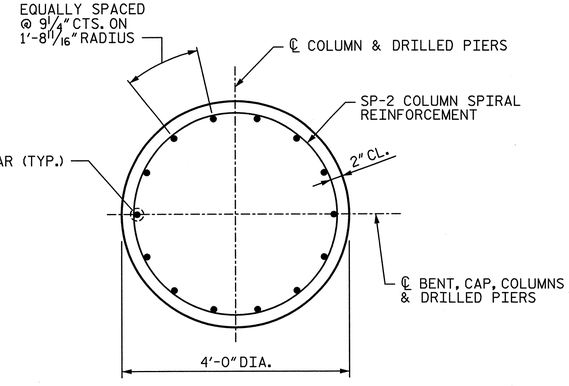

TYPICAL SECTION THROUGH COLUMN

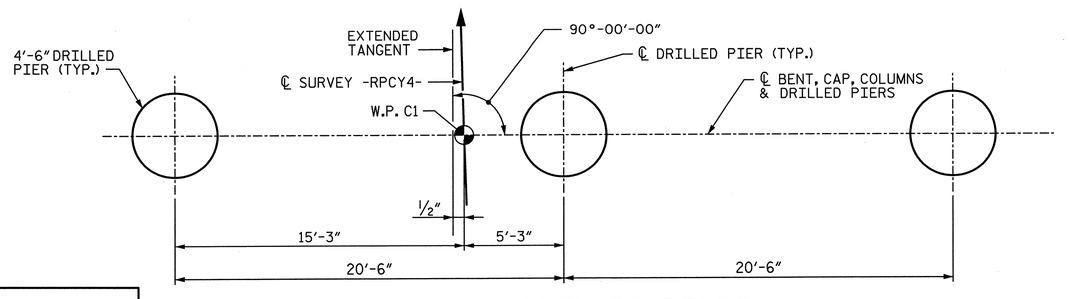

PLAN OF DRILLED PIERS

QUANTITIES

REINFORCING STEEL	LBS.	23,836
SPIRAL REINFORCING STEEL	LBS.	5,415
CLASS A CONCRETE : POUR 2 - COLUMNS	CU. YDS.	40.5
POUR 3 - CAP	CU. YDS.	43.1
TOTAL	CU. YDS.	83.6
4'-6" Ø DRILLED PIERS IN SOIL	L.F.	61.5
4'-6" Ø DRILLED PIERS NOT IN SOIL	L.F.	32.0
TOTAL 4'-6" Ø DRILLED PIERS	L.F.	93.5
DRILLED PIER CONCRETE : POUR 1	CU. YDS.	55.1
CSL TUBES	L.F.	490.0

PROJECT NO. U-2524C

GUILFORD COUNTY

STATION: POT 6+23.25 -RPCY4-

SHEET 2 OF 2

NORTH CAROLINA PROFESSIONAL SEAL 28479 ENGINEER KEVIN G. BAILEY 5-30-13

STATE OF NORTH CAROLINA
DEPARTMENT OF TRANSPORTATION
RALEIGH

SUBSTRUCTURE BENT 1 DETAILS & BILL OF MATERIAL

-RAMP C-

DRAWN BY : VMW DATE : 2-13
CHECKED BY : MFR DATE : 3-13
DESIGN ENGINEER OF RECORD: M. ROBBINS DATE : 5-13

STV / Ralph Whitehead Associates, Inc.
1000 West Morehead St., Ste. 200
Charlotte, NC 28208
NC License No. F-0991

REVISIONS					
NO.	BY:	DATE:	NO.	BY:	DATE:
1			3		
2			4		

SHEET NO. S-660
TOTAL SHEETS 32

5/29/2013 10:00:06 AM R:\station\Finals\(32) Bents 1- Sheet 2 of 2.dgn

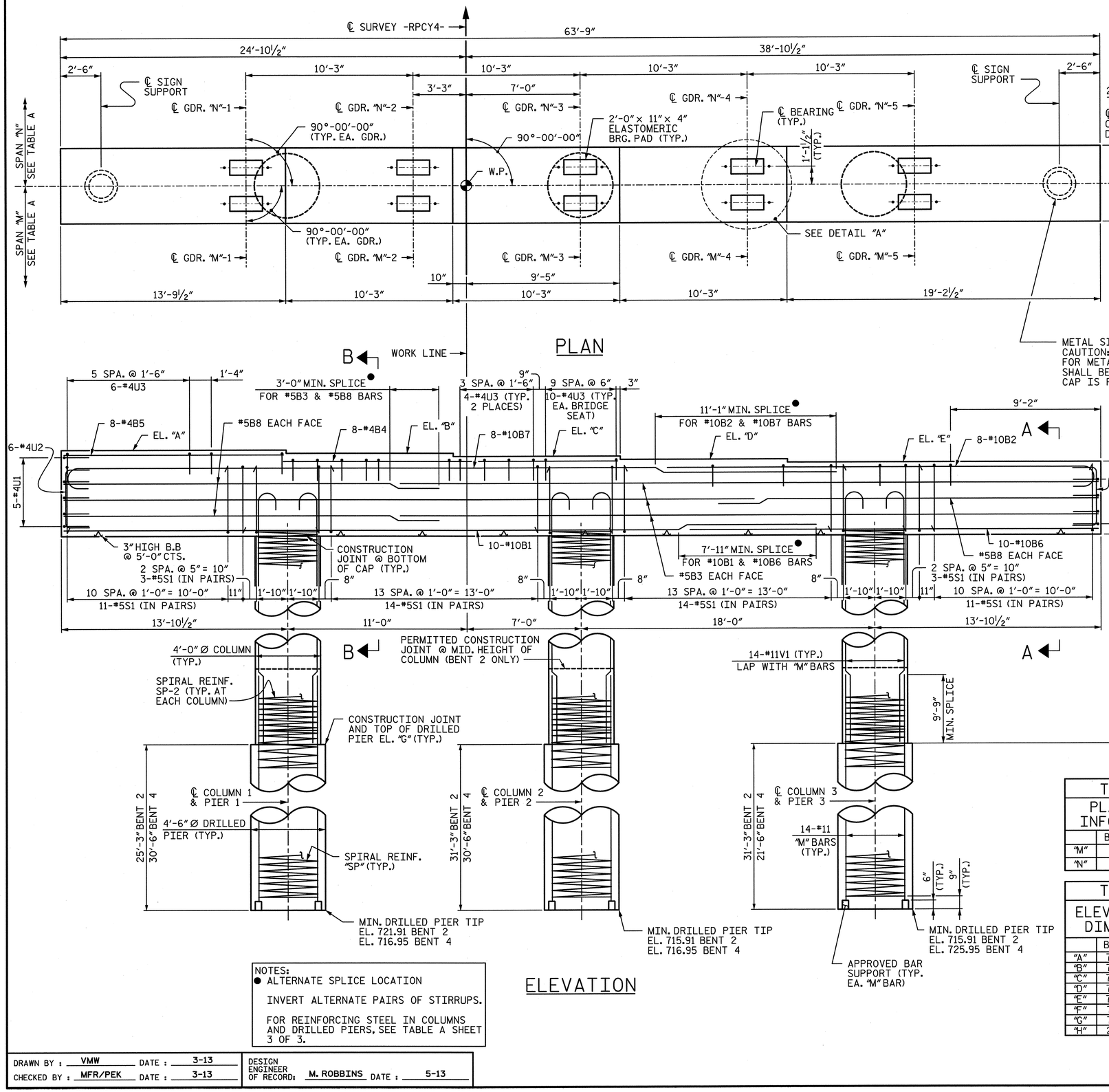

PLAN

DETAIL "A"

(TYP AT EACH BRIDGE SEAT)

ELEVATION

SIDE VIEW

NOTES:
● ALTERNATE SPLICE LOCATION

INVERT ALTERNATE PAIRS OF STIRRUPS.

FOR REINFORCING STEEL IN COLUMNS AND DRILLED PIERS, SEE TABLE A SHEET 3 OF 3.

TABLE A PLAN VIEW INFORMATION		
	BENT 2	BENT 4
"M"	1	3
"N"	2	4

TABLE B ELEVATIONS & DIMENSIONS		
	BENT 2	BENT 4
"A"	779.48	771.77
"B"	779.28	771.56
"C"	779.07	771.36
"D"	778.87	771.15
"E"	778.66	770.95
"F"	774.16	766.45
"G"	747.16	747.45
"H"	27'-0"	19'-0"

NOTES:

1. ALL REINFORCING STEEL IN THE DRILLED PIERS IS INCLUDED IN THE PAY ITEMS FOR "REINFORCING STEEL" AND "SPIRAL COLUMN REINFORCING STEEL".
2. THE LOCATION OF THE CONSTRUCTION JOINT IN THE DRILLED PIERS IS BASED ON AN APPROXIMATE GROUND LINE ELEVATION. IF THE CONSTRUCTION JOINT IS ABOVE THE ACTUAL GROUND ELEVATION, THE CONTRACTOR SHALL PLACE THE CONSTRUCTION JOINT 1 FOOT BELOW THE GROUND LINE.
3. STIRRUPS AND "U BARS" IN CAP MAY BE SHIFTED SLIGHTLY AS NECESSARY TO CLEAR ANCHOR BOLTS.
4. HOOKS ON "V" BARS MAY BE TURNED AS NECESSARY FOR PLACING REINFORCING STEEL.
5. A CONSTRUCTION JOINT AT MID-HEIGHT OF COLUMN IS PERMITTED.
6. FOR 2" Ø ANCHOR BOLTS, SEE "ELASTOMERIC BEARING DETAILS" SHEET.
7. SEE GENERAL DRAWINGS SHEET 5 OF 5 FOR ADDITIONAL NOTES.
8. SEE SHEET 2 OF 3 FOR SECTIONS ON ELEVATION VIEW.
9. FOR OVERHEAD SIGN (ROADWAY DETAIL & PAY ITEM) DETAILS AND INFORMATION, SEE ROADWAY AND/OR SIGNING PLANS.
10. THE CONTRACTOR IS RESPONSIBLE FOR DESIGN, FABRICATION AND INSTALLATION OF OVERHEAD SIGN AND ANCHOR BOLTS LOCATED ON THE BENT. FOR DETAILS AND DESIGN INFORMATION SEE SIGNING PLANS.
11. THE CONTRACTOR'S ATTENTION IS CALLED TO THE FACT THAT THE NUMBER, SIZE AND LAYOUT OF ANCHOR BOLTS FOR THE OVERHEAD SIGN SHALL BE APPROVED PRIOR TO CASTING THE BENT CAP. FURTHERMORE THE ANCHOR BOLT ASSEMBLY SHALL NOT INTERFERE WITH THE BENT CAP REINFORCING STEEL. ALL COSTS ASSOCIATED WITH THE FABRICATION AND INSTALLATION OF THE ANCHOR BOLTS SHALL BE CONSIDERED INCIDENTAL TO THE VARIOUS CONTRACT PAY ITEMS. NO SEPARATE MEASUREMENT OR PAYMENT WILL BE MADE.

NORTH CAROLINA PROFESSIONAL SEAL 28479 ENGINEER KEVIN G. BAILEY 5-30-12

PROJECT NO. U-2524C

GUILFORD COUNTY

STATION: POT 6+23.25 -RPCY4-

SHEET 1 OF 3

STATE OF NORTH CAROLINA
DEPARTMENT OF TRANSPORTATION
RALEIGH

SUBSTRUCTURE BENT 2 & 4 PLAN & ELEVATION

-RAMP C-

REVISIONS						SHEET NO.
NO.	BY:	DATE:	NO.	BY:	DATE:	S-661
1			3			TOTAL SHEETS
2			4			836

DRAWN BY : VMW DATE : 3-13
CHECKED BY : MFR/PEK DATE : 3-13
DESIGN ENGINEER OF RECORD: M. ROBBINS DATE : 5-13

STV / Ralph Whitehead Associates, Inc.
1000 West Morehead St., Ste. 200
Charlotte, NC 28208
NC License No. F-0991

5/29/2013 10:00:09 AM R:\station\Finals\(33) Bents 2 & 4 - Sheet 1 of 3.dgn

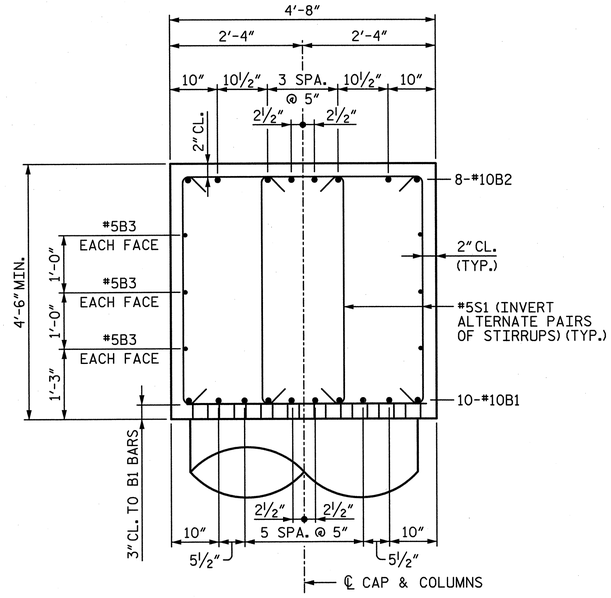

SECTION A-A

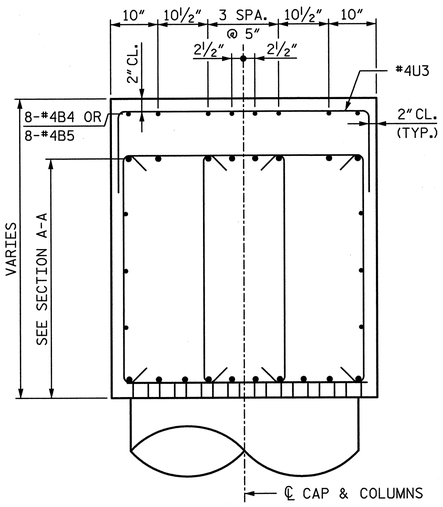

SECTION B-B

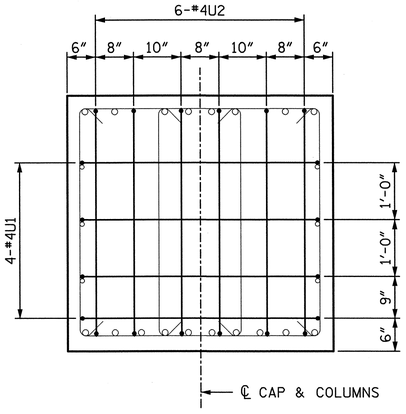

END VIEW C-C

(RIGHT END SHOWN, LEFT END SIMILAR)

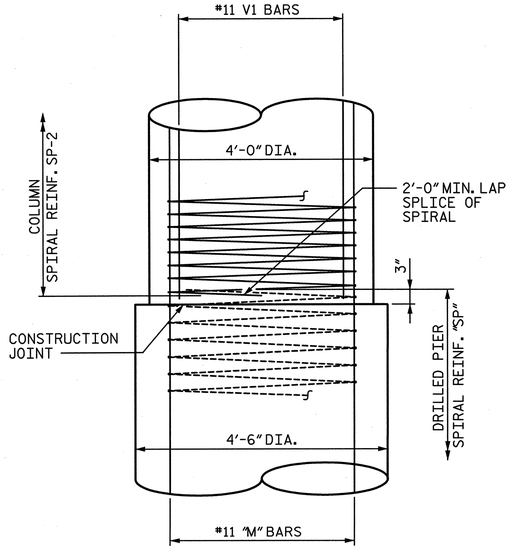

CONSTRUCTION JOINT DETAIL

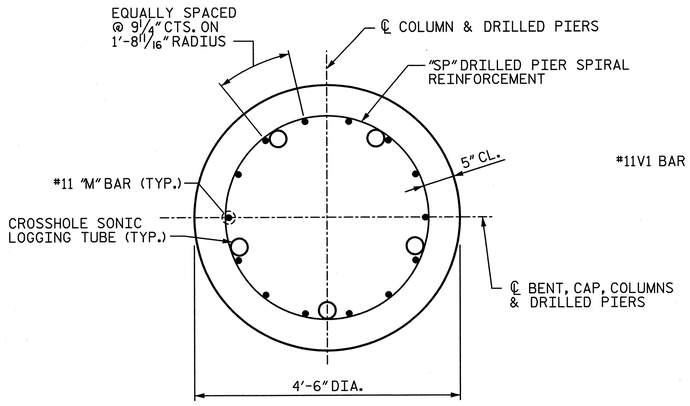

TYPICAL SECTION THROUGH DRILLED PIER

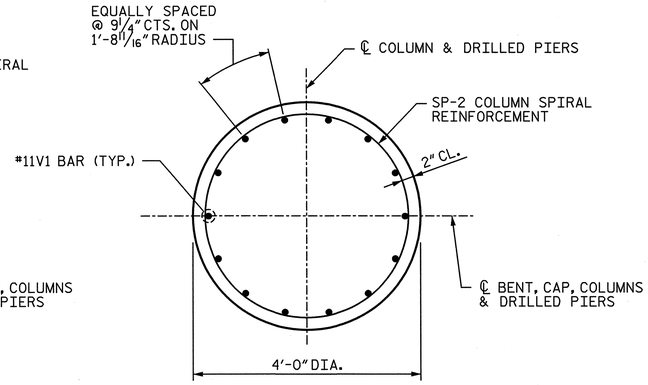

TYPICAL SECTION THROUGH COLUMN

PROJECT NO. U-2524C

GUILFORD COUNTY

STATION: POT 6+23.25 -RPCY4-

SHEET 2 OF 3

STATE OF NORTH CAROLINA
DEPARTMENT OF TRANSPORTATION
RALEIGH

SUBSTRUCTURE BENT 2 & 4 DETAILS

-RAMP C-

NORTH CAROLINA PROFESSIONAL SEAL 28479 ENGINEER KEVIN G. BAILEY 5-30-13

DRAWN BY : VMW	DATE : 3-13	DESIGN ENGINEER OF RECORD: P. KELLY	DATE : 5-13
CHECKED BY : PEK	DATE : 3-13		

STV/ Ralph Whitehead Associates, Inc.
1000 West Morehead St., Ste. 200
Charlotte, NC 28208
NC License No. F-0991

REVISIONS						SHEET NO.
NO.	BY:	DATE:	NO.	BY:	DATE:	S-662
1			3			TOTAL SHEETS
2			4			83

5/29/2013 10:00:11 AM R:\ustation\Finals\134 Bents 2 & 4 - Sheet 2 of 3.dgn

TABLE C

BENT 2 COLUMNS & DRILLED PIERS REINFORCING BILL OF MATERIAL

COLUMN/ DRILLED PIER	BAR	NO.	SIZE	TYPE	●	LENGTH	WEIGHT	DRILLED PIER LENGTH
1	M11	14	#11	STR.		34′-6″	2,566	25′-3″
	V1	14	#11	①	30′-9″	32′-4″	2,405	
	SP-11	1	**	④	24′-9″	703′-6″	734	
	SP-2	1	*	⑤	27′-3″	1264′-6″	845	
2 & 3	M12	28	#11	STR.		40′-6″	6,025	31′-3″
	V1	28	#11	①	30′-9″	32′-4″	4,810	
	SP-12	2	**	④	30′-9″	862′-4″	1799	
	SP-2	2	*	⑤	27′-3″	1264′-6″	1689	
COLUMN/DRILLED PIER REINFORCING STEEL						LBS.	15,806	
SPIRAL REINFORCING STEEL						LBS.	5,067	

** THE SP-11 AND SP-12 SPIRAL REINFORCING STEEL SHALL BE W31 OR D-31 COLD DRAWN WIRE OR #5 PLAIN OR DEFORMED BAR WITH A 5″PITCH.

* THE SP-2 SPIRAL REINFORCING SHALL BE W20 OR D-20 COLD DRAWN WIRE OR #4 PLAIN OR DEFORMED BAR WITH A 3″PITCH.

TABLE C

BENT 4 COLUMNS & DRILLED PIERS REINFORCING BILL OF MATERIAL

COLUMN/ DRILLED PIER	BAR	NO.	SIZE	TYPE	●	LENGTH	WEIGHT	DRILLED PIER LENGTH
1 & 2	M11	28	#11	STR.		39′-9″	5,913	30′-6″
	V1	28	#11	①	22′-9″	24′-4″	3,620	
	SP-11	2	**	④	30′-0″	839′-8″	1,752	
	SP-2	2	*	⑤	19′-3″	899′-11″	1,202	
3	M12	14	#11	STR.		30′-9″	2,287	21′-6″
	V1	14	#11	①	22′-9″	24′-4″	1,810	
	SP-12	1	**	④	21′-0″	601′-5″	627	
	SP-2	1	*	⑤	19′-3″	899′-11″	601	
COLUMN/DRILLED PIER REINFORCING STEEL						LBS.	13,630	
SPIRAL REINFORCING STEEL						LBS.	4,182	

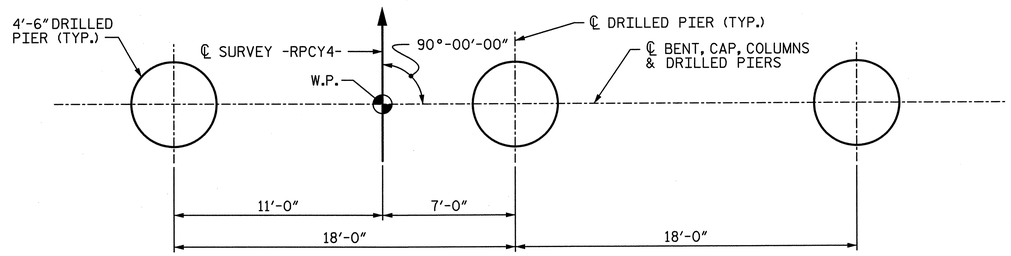

PLAN OF DRILLED PIERS

BAR TYPES

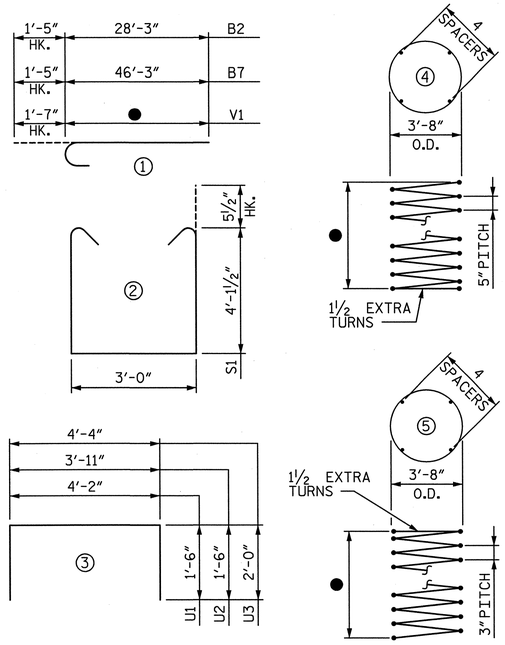

ALL BAR DIMENSIONS ARE OUT TO OUT

CAP REINFORCING BILL OF MATERIAL FOR ONE BENT (2 REQUIRED)

BAR	NO.	SIZE	TYPE	LENGTH	WEIGHT
B1	10	#10	STR.	44′-8″	1,922
B2	8	#10	①	29′-8″	1,021
B3	6	#5	STR.	42′-3″	264
B4	8	#4	STR.	20′-6″	110
B5	8	#4	STR.	13′-3″	71
B6	10	#10	STR.	26′-8″	1,147
B7	8	#10	①	47′-8″	1,641
B8	6	#5	STR.	24′-3″	152
S1	120	#5	②	12′-2″	1,523
U1	9	#4	③	7′-2″	43
U2	12	#4	③	6′-11″	55
U3	64	#4	③	8′-4″	356
CAP REINFORCING STEEL				LBS.	8,305

NOTES:

FOR ● AND COLUMN/DRILLED PIER REINFORCING BILL OF MATERIAL SEE TABLE C THIS SHEET.

QUANTITIES

		BENT 2	BENT 4
REINFORCING STEEL	LBS.	24,111	21,935
SPIRAL REINFORCING STEEL	LBS.	5,067	4,182
CLASS A CONCRETE : POUR 2 - COLUMNS	CU. YDS.	37.7	26.6
POUR 3 - CAP	CU. YDS.	53.8	53.8
TOTAL	CU. YDS.	91.5	80.4
4′-6″Ø DRILLED PIERS IN SOIL	L.F.	56.8	52.5
4′-6″Ø DRILLED PIERS NOT IN SOIL	L.F.	31.0	30.0
TOTAL 4′-6″Ø DRILLED PIERS	L.F.	87.8	82.5
PERMANENT STEEL CASING FOR 4′-6″Ø DRILLED PIER	L.F.	40.0	--
DRILLED PIER CONCRETE : POUR 1	CU. YDS.	51.7	48.6
CSL TUBES	L.F.	461.3	435.0

PROJECT NO. U-2524C

GUILFORD COUNTY

STATION: POT 6+23.25 -RPCY4-

SHEET 3 OF 3

STATE OF NORTH CAROLINA
DEPARTMENT OF TRANSPORTATION
RALEIGH

SUBSTRUCTURE BENT 2 & 4 BILL OF MATERIAL

-RAMP C-

NORTH CAROLINA PROFESSIONAL SEAL 28479 ENGINEER KEVIN G. BAILEY
5-30-13

DRAWN BY : VMW	DATE : 3-13	DESIGN ENGINEER OF RECORD: P. KELLY	DATE : 5-13
CHECKED BY : PEK	DATE : 3-13		

STV / Ralph Whitehead Associates, Inc.
1000 West Morehead St. Ste. 200
Charlotte, NC 28208
NC License No. F-0991

REVISIONS						SHEET NO.
NO.	BY:	DATE:	NO.	BY:	DATE:	S-663
1			3			TOTAL SHEETS
2			4			836

5/29/2013 10:00:13 AM R:\Ustation\Finals\(35) Bents 2 & 4 - Sheet 3 of 3.dgn

NOTES:

1. ALL REINFORCING STEEL IN THE DRILLED PIERS IS INCLUDED IN THE PAY ITEMS FOR "REINFORCING STEEL" AND "SPIRAL COLUMN REINFORCING STEEL".
2. THE LOCATION OF THE CONSTRUCTION JOINT IN THE DRILLED PIERS IS BASED ON AN APPROXIMATE GROUND LINE ELEVATION. IF THE CONSTRUCTION JOINT IS ABOVE THE ACTUAL GROUND ELEVATION, THE CONTRACTOR SHALL PLACE THE CONSTRUCTION JOINT 1 FOOT BELOW THE GROUND LINE.
3. STIRRUPS AND "U" BARS IN CAP MAY BE SHIFTED SLIGHTLY AS NECESSARY TO CLEAR ANCHOR BOLTS.
4. HOOKS ON "V" BARS MAY BE TURNED AS NECESSARY FOR PLACING REINFORCING STEEL.
5. A CONSTRUCTION JOINT AT MID-HEIGHT OF COLUMN IS PERMITTED.
6. FOR 2" Ø ANCHOR BOLTS, SEE "ELASTOMERIC BEARING DETAILS" SHEET.
7. SEE GENERAL DRAWING SHEET 5 OF 5 FOR ADDITIONAL NOTES.
8. SEE SHEET 2 OF 3 FOR SECTIONS ON ELEVATION VIEW.

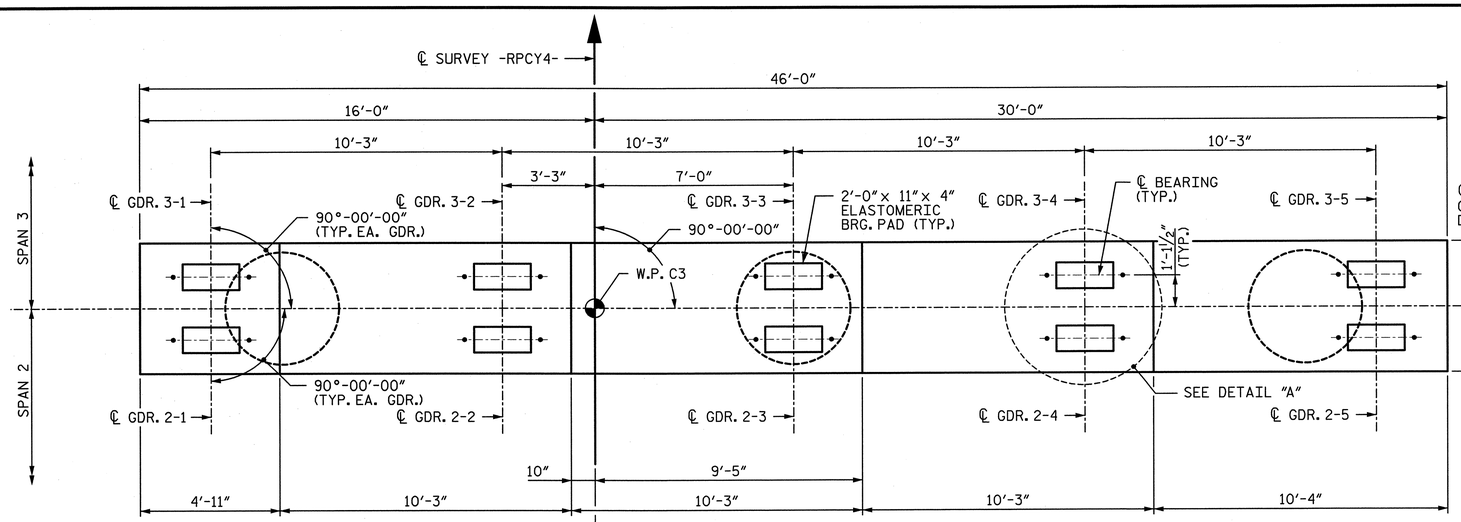

PLAN

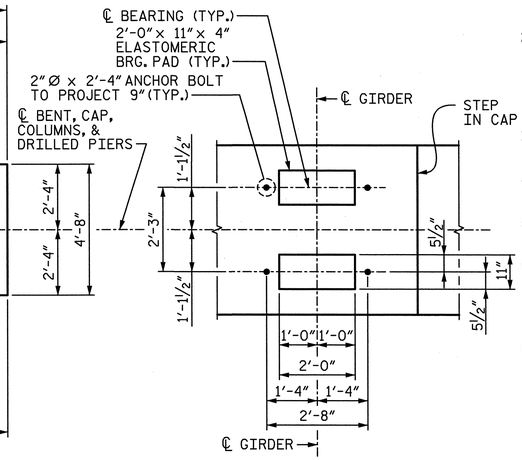

DETAIL "A"
(TYP AT EACH BRIDGE SEAT)

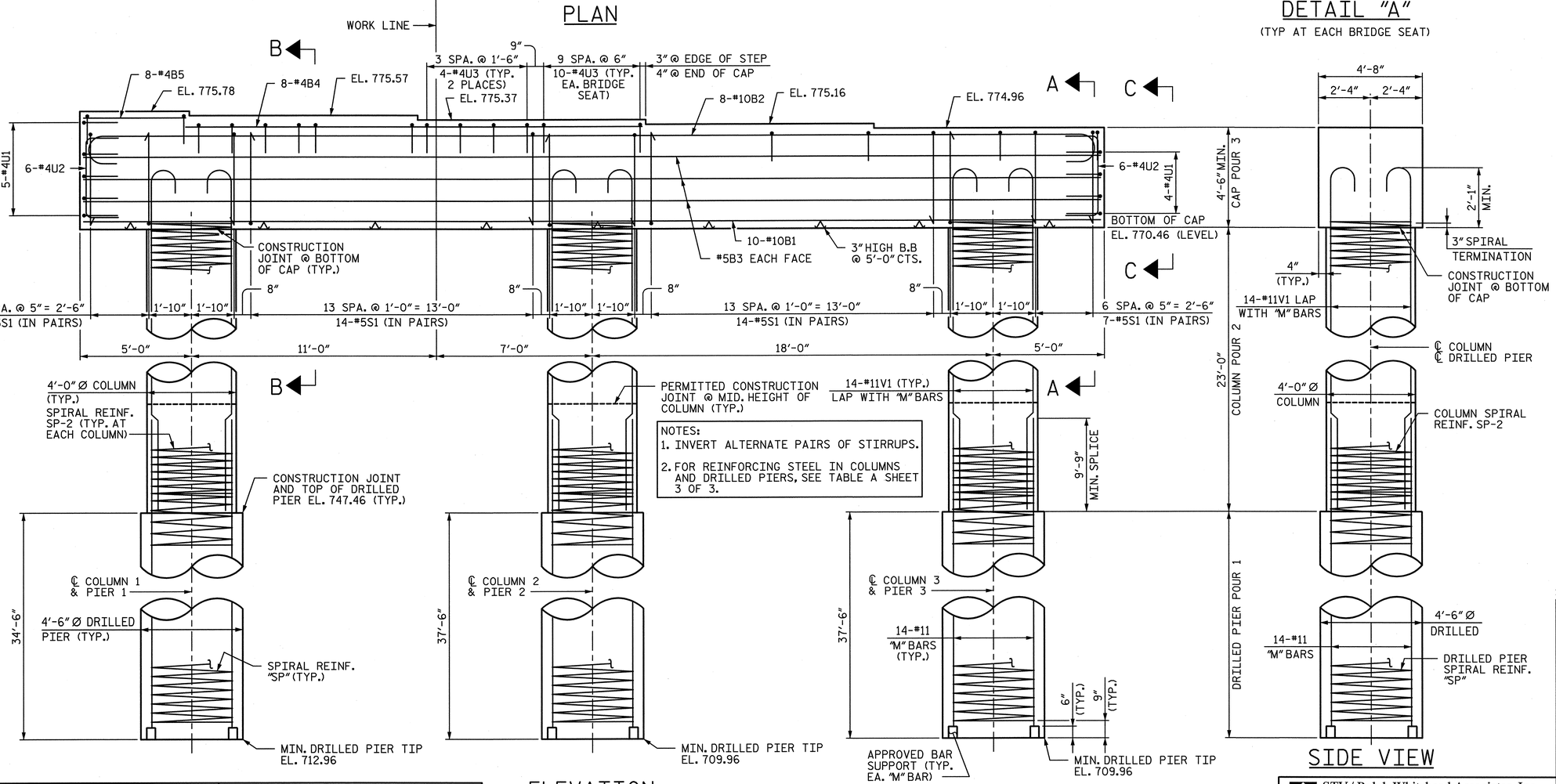

ELEVATION

SIDE VIEW

NORTH CAROLINA PROFESSIONAL SEAL 28479 ENGINEER KEVIN G. BAILEY 5-30-13

PROJECT NO. U-2524C

GUILFORD COUNTY

STATION: POT 6+23.25 -RPCY4-

SHEET 1 OF 3

STATE OF NORTH CAROLINA
DEPARTMENT OF TRANSPORTATION
RALEIGH

SUBSTRUCTURE BENT 3 PLAN & ELEVATION

-RAMP C-

DRAWN BY : VMW	DATE : 2-13	DESIGN ENGINEER OF RECORD: M. ROBBINS	DATE : 5-13
CHECKED BY : MFR	DATE : 2-13		

STV / Ralph Whitehead Associates, Inc.
1000 West Morehead St., Ste. 200
Charlotte, NC 28208
NC License No. F-0991

REVISIONS						SHEET NO.
NO.	BY:	DATE:	NO.	BY:	DATE:	S-664
1			3			TOTAL SHEETS
2			4			83

5/29/2013 10:00:15 AM R:\ustation\Finals\(36) Bents 3 - Sheet 1 of 3.dgn

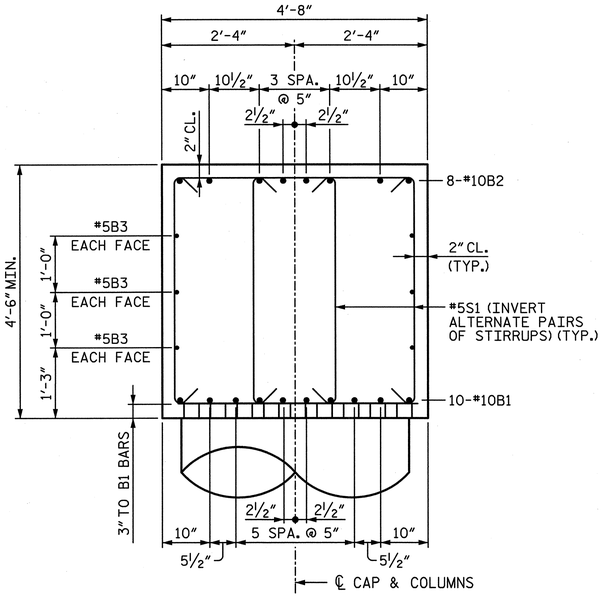

SECTION A-A

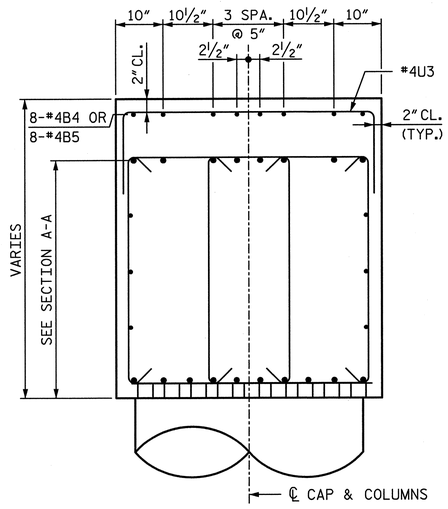

SECTION B-B

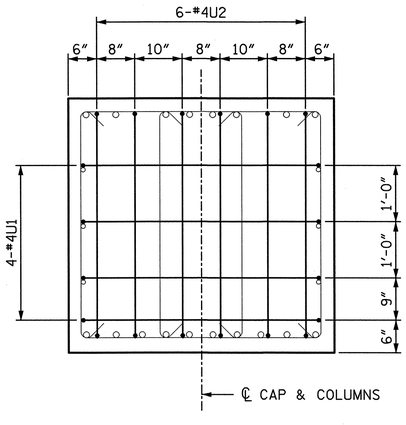

END VIEW C-C

(RIGHT END SHOWN, LEFT END SIMILAR)

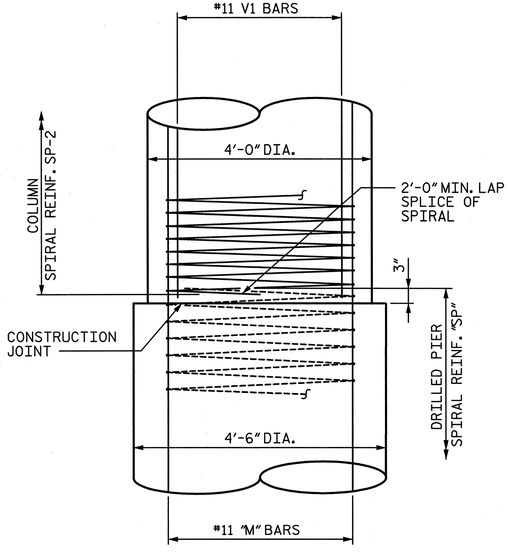

CONSTRUCTION JOINT DETAIL

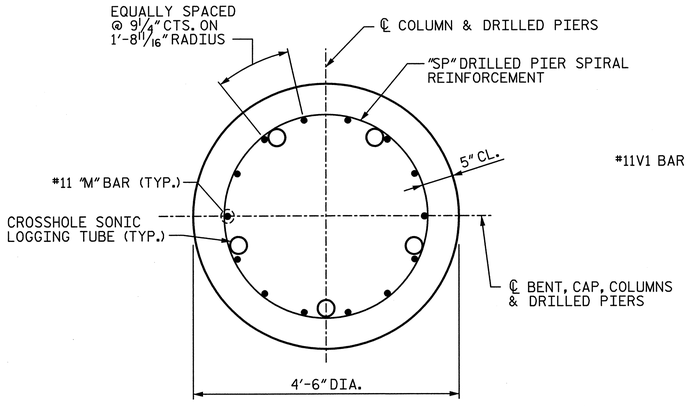

TYPICAL SECTION THROUGH DRILLED PIER

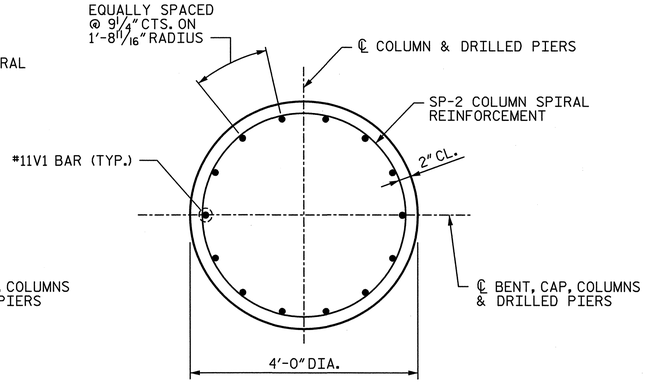

TYPICAL SECTION THROUGH COLUMN

PROJECT NO. U-2524C

GUILFORD COUNTY

STATION: POT 6+23.25 -RPCY4-

SHEET 2 OF 3

STATE OF NORTH CAROLINA
DEPARTMENT OF TRANSPORTATION
RALEIGH

SUBSTRUCTURE BENT 3 DETAILS

-RAMP C-

NORTH CAROLINA PROFESSIONAL ENGINEER SEAL 28479 KEVIN G. BAILEY
5-30-13

DRAWN BY : VMW	DATE : 2-13	DESIGN ENGINEER OF RECORD: M. ROBBINS	DATE : 5-13
CHECKED BY : MFR	DATE : 2-13		

STV / Ralph Whitehead Associates, Inc.
1000 West Morehead St., Ste. 200
Charlotte, NC 28208
NC License No. F-0991

REVISIONS					
NO.	BY:	DATE:	NO.	BY:	DATE:
1			3		
2			4		

SHEET NO. S-665

TOTAL SHEETS 836

5/29/2013 10:00:17 AM R:\station\Finals\(37) Bents 3 - Sheet 2 of 3.dgn

TABLE A

BENT 3 COLUMNS & DRILLED PIERS REINFORCING BILL OF MATERIAL

COLUMN/ DRILLED PIER	BAR	NO.	SIZE	TYPE	●	LENGTH	WEIGHT	DRILLED PIER LENGTH
1	M11	14	#11	STR.		43′-9″	3,254	34′-6″
	V1	14	#11	④	26′-9″	28′-4″	2,107	
	SP-11	1	**	⑤	34′-0″	953′-2″	994	
	SP-2	1	*	⑥	23′-3″	1082′-3″	723	
2 & 3	M12	28	#11	STR.		46′-9″	6,955	37′-6″
	V1	28	#11	④	26′-9″	28′-4″	4,215	
	SP-12	2	**	⑤	37′-0″	1032′-7″	2,154	
	SP-2	2	*	⑥	23′-3″	1082′-3″	1,446	

** THE SP-11 AND SP-12 SPIRAL REINFORCING STEEL SHALL BE W31 OR D-31 COLD DRAWN WIRE OR #5 PLAIN OR DEFORMED BAR WITH A 5″PITCH.
* THE SP-2 SPIRAL REINFORCING SHALL BE W20 OR D-20 COLD DRAWN WIRE OR #4 PLAIN OR DEFORMED BAR WITH A 3″PITCH.

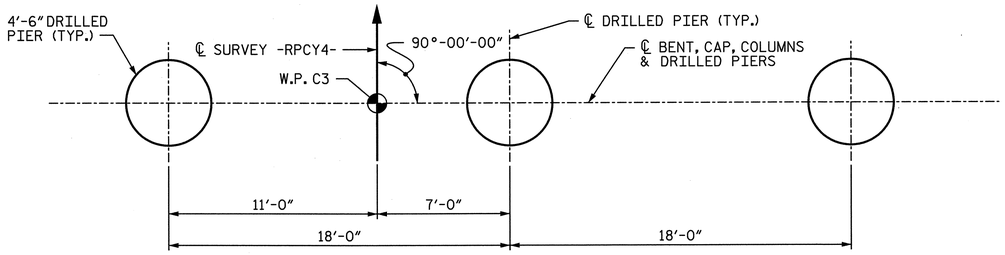

PLAN OF DRILLED PIERS

BAR TYPES

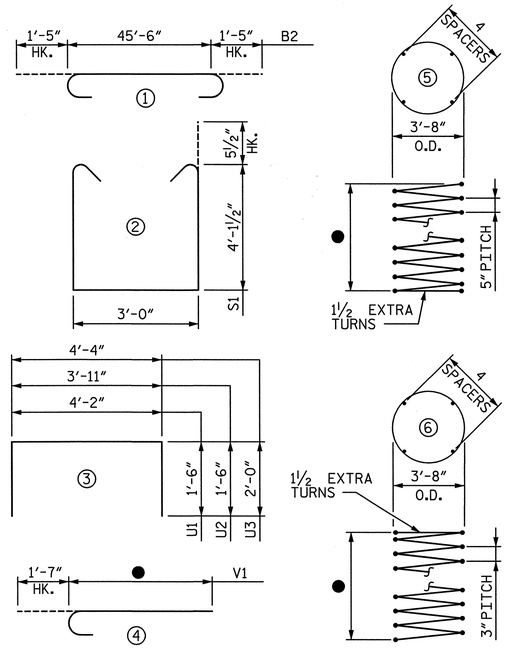

ALL BAR DIMENSIONS ARE OUT TO OUT

CAP REINFORCING BILL OF MATERIAL

BAR	NO.	SIZE	TYPE	LENGTH	WEIGHT
B1	10	#10	STR.	45′-8″	1,965
B2	8	#10	①	48′-4″	1,664
B3	6	#5	STR.	45′-8″	286
B4	8	#4	STR.	20′-6″	110
B5	8	#4	STR.	4′-7″	24
S1	92	#5	②	12′-2″	1,167
U1	9	#4	③	7′-2″	43
U2	12	#4	③	6′-11″	55
U3	58	#4	③	8′-4″	323
				TOTAL	5,637

NOTES:

FOR ● AND COLUMN/DRILLED PIER REINFORCING BILL OF MATERIAL SEE TABLE A THIS SHEET.

QUANTITIES

REINFORCING STEEL		LBS.	22,168
SPIRAL REINFORCING STEEL		LBS.	5,317
CLASS A CONCRETE :	POUR 2 - COLUMNS	CU. YDS.	32.1
	POUR 3 - CAP	CU. YDS.	38.7
	TOTAL	CU. YDS.	70.8
4′-6″Ø DRILLED PIERS IN SOIL		L.F.	76.5
4′-6″Ø DRILLED PIERS NOT IN SOIL		L.F.	33.0
TOTAL 4′-6″Ø DRILLED PIERS		L.F.	109.5
PERMANENT STEEL CASING FOR 4′-6″Ø DRILLED PIER		L.F.	47.0
DRILLED PIER CONCRETE :	POUR 1	CU. YDS.	64.5
CSL TUBES		L.F.	570.0

PROJECT NO. U-2524C

GUILFORD COUNTY

STATION: POT 6+23.25 -RPCY4-

SHEET 3 OF 3

STATE OF NORTH CAROLINA
DEPARTMENT OF TRANSPORTATION
RALEIGH

SUBSTRUCTURE BENT 3 BILL OF MATERIAL

-RAMP C-

NORTH CAROLINA PROFESSIONAL ENGINEER SEAL 28479 KEVIN G. BAILEY 6-11-13

STV/ Ralph Whitehead Associates, Inc.
1000 West Morehead St., Ste. 200
Charlotte, NC 28208
NC License No. F-0991

REVISIONS						SHEET NO.
NO.	BY:	DATE:	NO.	BY:	DATE:	S-666
1			3			TOTAL SHEETS
2			4			834

DRAWN BY : VMW DATE : 2-13
CHECKED BY : MFR DATE : 2-13

DESIGN ENGINEER OF RECORD: M. ROBBINS DATE : 5-13

6/11/2013 1:26:19 PM R:\ustation\Finals\(38) Bents 3 - Sheet 3 of 3.dgn

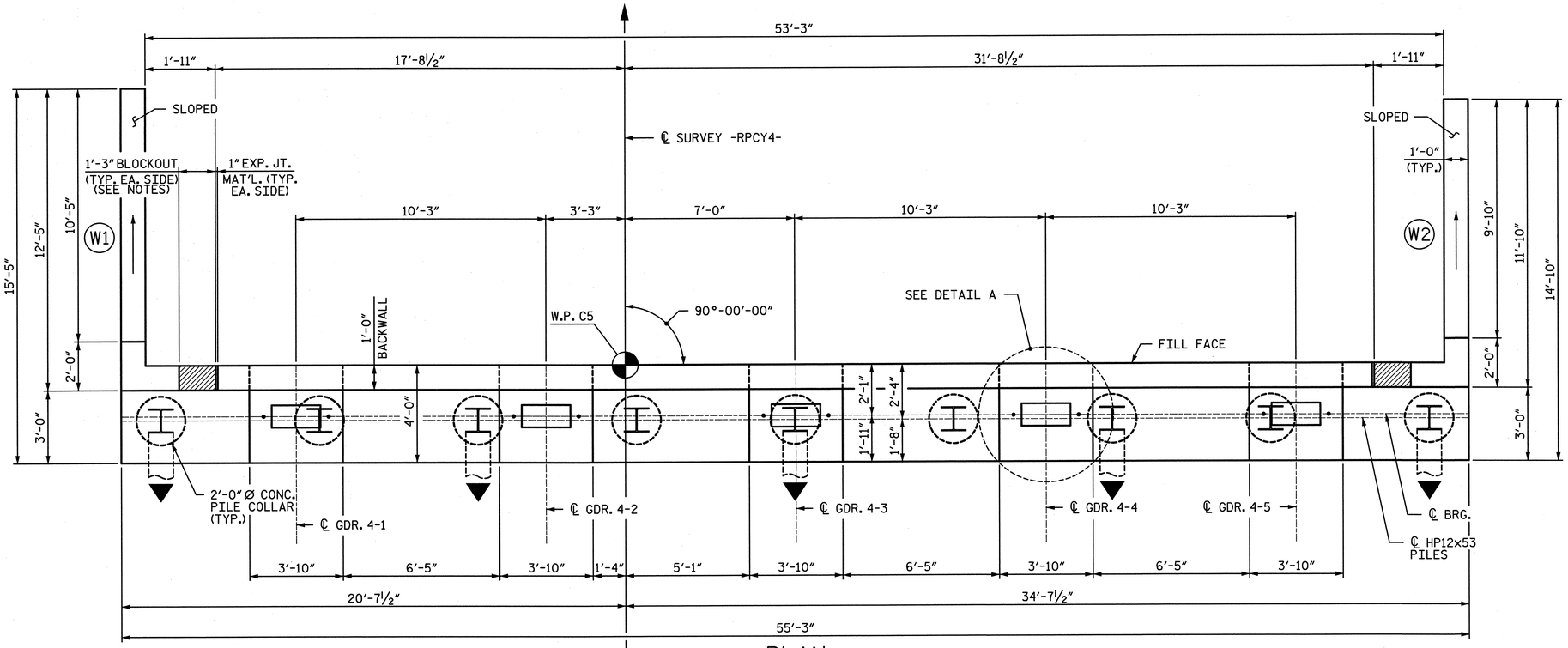

PLAN

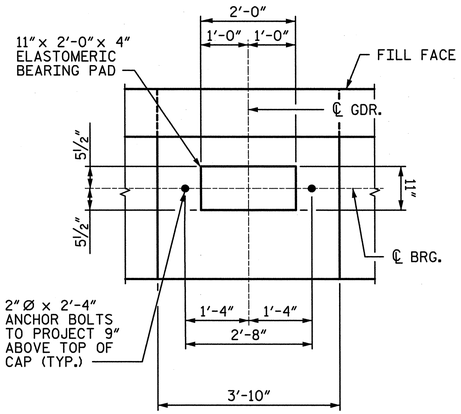

DETAIL A
(TYP. EA. GIRDER)

NOTES:

1. SEE SHEET 3 OF 3 FOR NOTES.
2. SEE SHEET 3 OF 3 FOR SECTIONS A-A AND B-B.

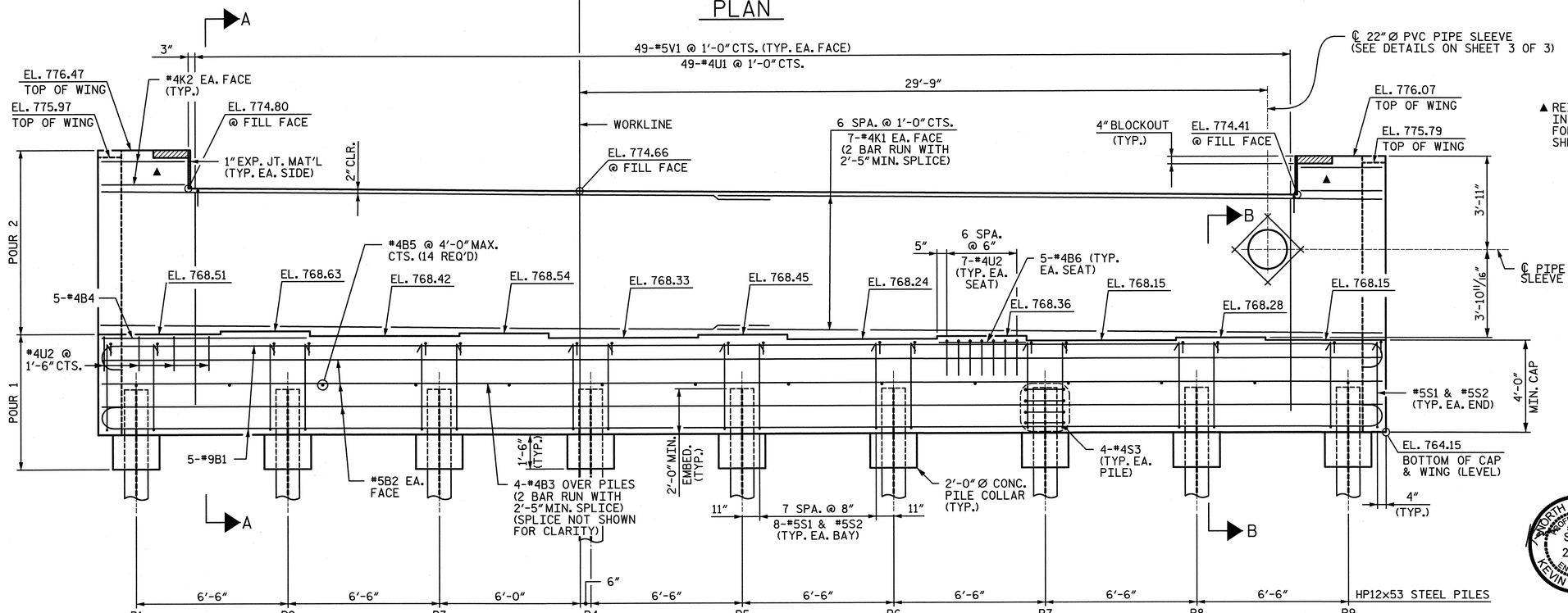

ELEVATION
(LOOKING IN THE DIRECTION OF STATIONING)

PROJECT NO. U-2524C
GUILFORD COUNTY
STATION: POT 6+23.25 -RPCY4-

SHEET 1 OF 3

STATE OF NORTH CAROLINA
DEPARTMENT OF TRANSPORTATION
RALEIGH

SUBSTRUCTURE END BENT 2

-RAMP C-

NORTH CAROLINA PROFESSIONAL SEAL 28479 ENGINEER KEVIN G. BAILEY 5-30-13

DRAWN BY : CLG	DATE : 2-13	DESIGN ENGINEER OF RECORD: P. KELLY	DATE : 5-13
CHECKED BY : PEK	DATE : 3-13		

STV / Ralph Whitehead Associates, Inc.
1000 West Morehead St., Ste. 200
Charlotte, NC 28208
NC License No. F-0991

REVISIONS						SHEET NO.
NO.	BY:	DATE:	NO.	BY:	DATE:	S-667
1			3			TOTAL SHEETS
2			4			834

5/29/2013 5:20:45 PM R:\station\Finals\(39) End Bent 2 - Sheet 1of 3.dgn

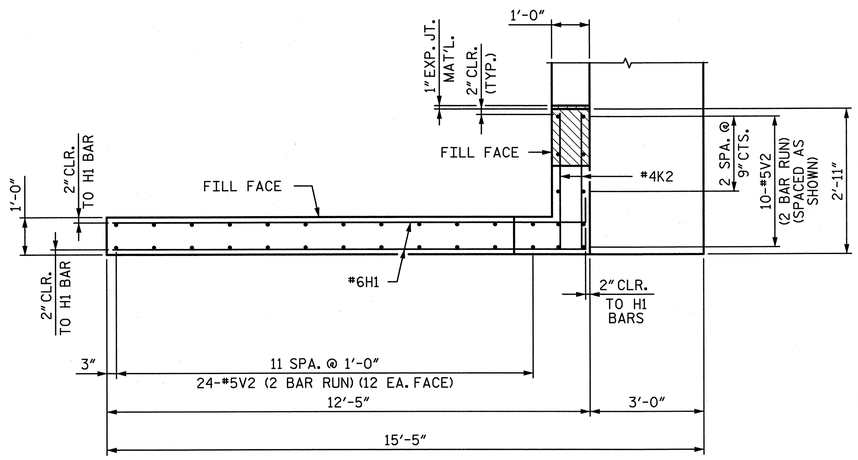

PLAN (W1)

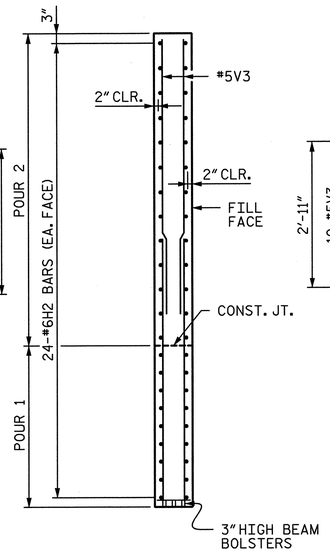

SECTION D-D

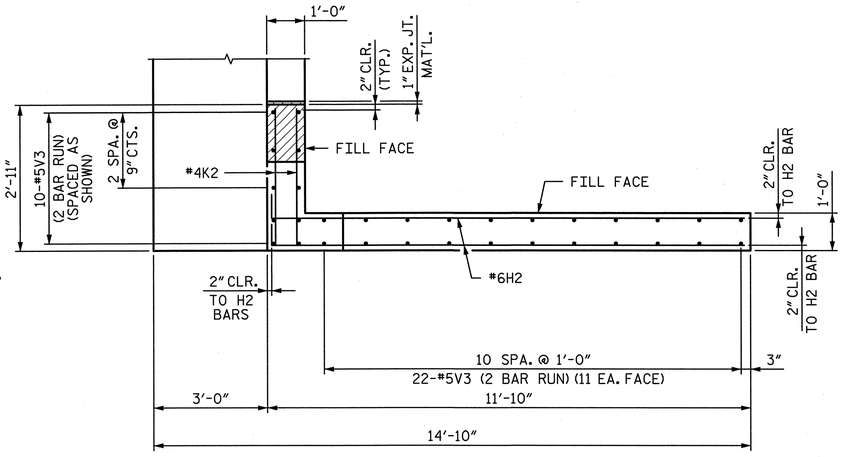

PLAN (W2)

NOTES:
SEE SHEET 3 OF 3 FOR NOTES.

ELEVATION (W1)

SECTION C-C

ELEVATION (W2)

PROJECT NO. U-2524C
GUILFORD COUNTY
STATION: POT 6+23.25 -RPCY4-

SHEET 2 OF 3

STATE OF NORTH CAROLINA
DEPARTMENT OF TRANSPORTATION
RALEIGH

SUBSTRUCTURE
END BENT 2

-RAMP C-

NORTH CAROLINA PROFESSIONAL SEAL 28479 ENGINEER KEVIN G. BAILEY 5-30-13

DRAWN BY : CLG	DATE : 2-13	DESIGN ENGINEER OF RECORD: P. KELLY	DATE : 5-13
CHECKED BY : PEK	DATE : 3-13		

STV/ Ralph Whitehead Associates, Inc.
1000 West Morehead St. Ste. 200
Charlotte, NC 28208
NC License No. F-0991

REVISIONS						SHEET NO.
NO.	BY:	DATE:	NO.	BY:	DATE:	S-668
1			3			TOTAL SHEETS
2			4			836

5/29/2013 10:00:23 AM R:\ustation\Finals\(40) End Bent 2 - Sheet 2 of 3.dgn

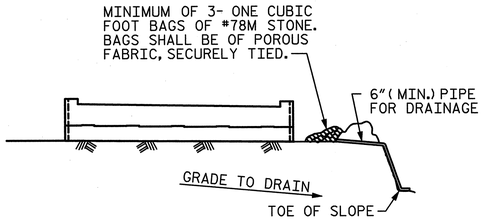

BAGGED STONE AND PIPE SHALL BE PLACED IMMEDIATELY AFTER COMPLETION OF END BENT EXCAVATION. PIPE MAY BE EITHER CONCRETE, CORRUGATED STEEL, CORRUGATED ALUMINUM ALLOY, OR CORRUGATED PLASTIC. PERFORATED PIPE WILL NOT BE ALLOWED.

BAGGED STONE SHALL REMAIN IN PLACE UNTIL THE ENGINEER DIRECTS THAT IT BE REMOVED. THE CONTRACTOR SHALL REMOVE AND DISPOSE OF SILT ACCUMULATIONS AT BAGGED STONE WHEN SO DIRECTED BY THE ENGINEER. BAGS SHALL BE REMOVED AND REPLACED WHENEVER THE ENGINEER DETERMINES THAT THEY HAVE DETERIORATED AND LOST THEIR EFFECTIVENESS.

NO SEPARATE PAYMENT WILL BE MADE FOR THIS WORK AND THE ENTIRE COST OF THIS WORK SHALL BE INCLUDED IN THE UNIT CONTRACT PRICE BID FOR THE SEVERAL PAY ITEMS.

TEMPORARY DRAINAGE AT END BENT

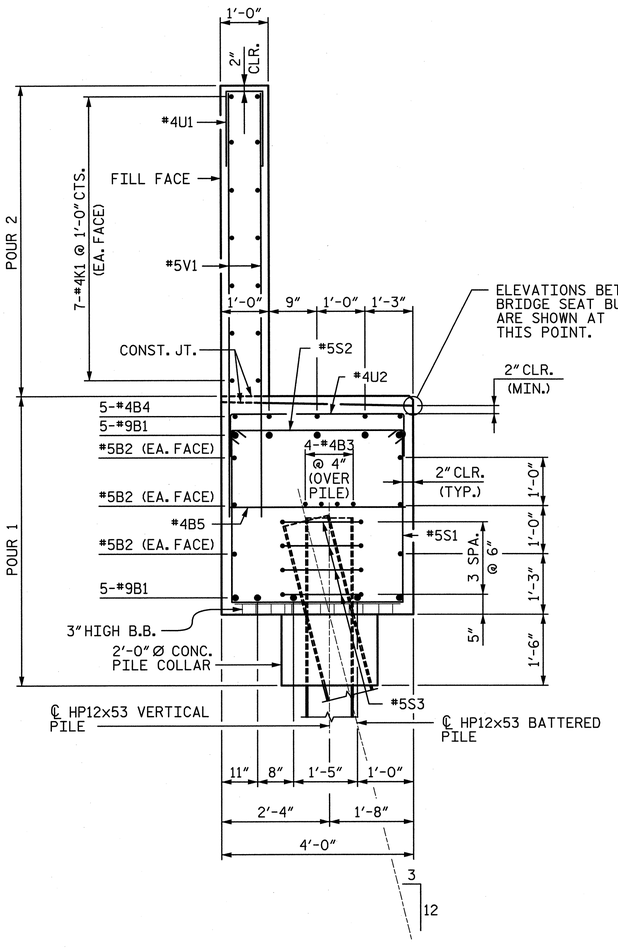

SECTION A-A

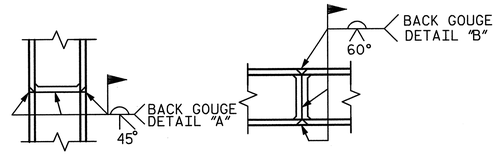

▲PILE VERTICAL

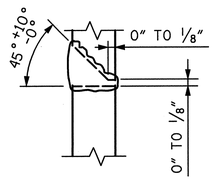

DETAIL "A"

▲PILE HORIZONTAL OR VERTICAL

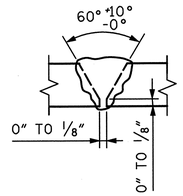

DETAIL "B"

▲ POSITION OF PILE DURING WELDING.

PILE SPLICE DETAILS

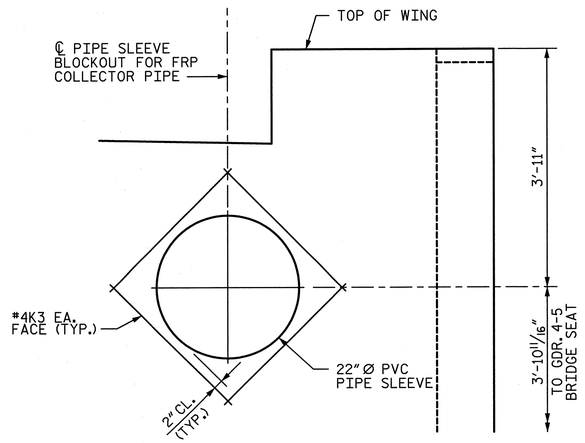

BLOCKOUT DETAIL FOR STRUCTURE DRAINAGE SYSTEM

REINFORCING STEEL IN BACKWALL SHALL BE CUT AS REQUIRED TO WITHIN 2" OF BLOCKOUT.

FOR ADDITIONAL DETAILS, SEE STRUCTURE DRAINAGE SYSTEM DETAILS.

BAR TYPES

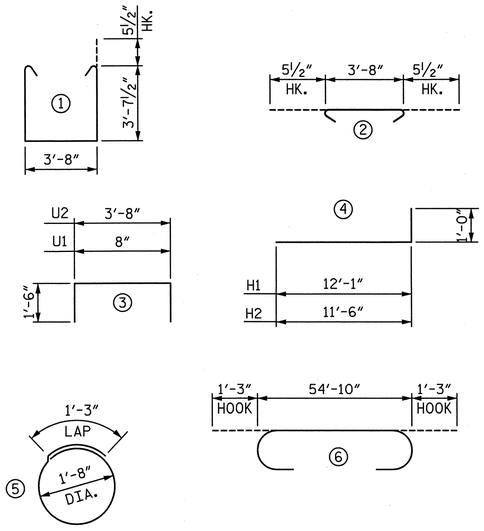

ALL BAR DIMENSIONS ARE OUT TO OUT.

REINFORCING BAR SCHEDULE

BAR	NO.	SIZE	TYPE	LENGTH	WEIGHT
B1	10	#9	⑥	57'-4"	1,949
B2	6	#5	STR	54'-10"	343
B3	8	#4	STR	28'-8"	153
B4	5	#4	STR	8'-11"	30
B5	14	#4	STR	3'-8"	34
B6	25	#4	STR	3'-6"	58
H1	50	#6	④	13'-1"	983
H2	48	#6	④	12'-6"	901
K1	28	#4	STR	28'-10"	539
K2	8	#4	STR	3'-6"	19
K3	8	#4	STR	2'-0"	11
V1	98	#5	STR	8'-3"	843
V2	68	#5	STR	7'-1"	502
V3	64	#5	STR	6'-11"	462
S1	66	#5	①	11'-10"	815
S2	66	#5	②	4'-7"	316
S3	36	#4	⑤	6'-6"	156
U1	49	#4	③	3'-8"	120
U2	39	#4	③	6'-8"	174

QUANTITIES

		END BENT 1
REINFORCING STEEL	LBS.	8,408
CLASS A CONCRETE		
POUR 1 (CAP, PILE COLLAR & LOWER WING)	: CU. YARDS	39.7
POUR 2 (BACKWALL & UPPER WING)	: CU. YARDS	20.0
TOTAL	: CU. YARDS	59.7
HP12x53 STEEL PILES	NO.	9
	LIN. FEET	315

NOTES:

STIRRUPS IN CAP MAY BE SHIFTED AS NECESSARY TO CLEAR ANCHOR BOLTS.

BACKWALL SHALL BE PLACED BEFORE APPLYING THE EPOXY PROTECTIVE COATING.

THE TOP SURFACE AREAS OF THE END BENT CAP SHALL BE CURED IN ACCORDANCE WITH THE STANDARD SPECIFICATIONS EXCEPT THAT THE MEMBRANE CURING COMPOUND METHOD SHALL NOT BE USED.

THE TOP SURFACE OF THE CAP EXCEPT THE BRIDGE SEAT BUILDUPS SHALL BE SLOPED TRANSVERSELY FROM THE FILL FACE TO THE OUTSIDE FACE AT THE RATE OF 2%.

"U" BARS IN BRIDGE SEATS MAY BE SHIFTED TO CLEAR OTHER REINFORCING.

DIMENSIONS LOCATING PILES ARE SHOWN TO THE CENTERLINE OF THE PILE AT THE BOTTOM OF THE END BENT CAP.

THE CONCRETE IN THE SHADED AREA OF THE WING SHALL BE POURED AFTER THE BARRIER RAIL ARE CAST IF SLIP FORMING IS USED.

SEE "ELASTOMERIC BEARING DETAILS" SHEET FOR 2" Ø ANCHOR BOLT DETAIL.

INSTALL THE 4" Ø DRAIN PIPE THROUGH THE WING WALL AS REQUIRED FOR REINFORCED BRIDGE APPROACH FILLS, SEE THE ROADWAY PLANS. REINFORCING STEEL IN THE WING WALL MAY BE SHIFTED AS NECESSARY TO CLEAR THE DRAIN PIPE.

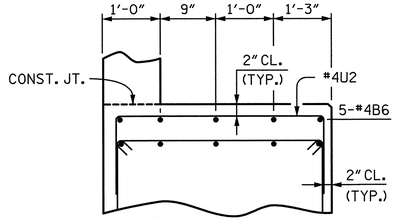

PARTIAL SECTION B

(TYP. AT EACH BRIDGE SEAT)
(ANCHOR BOLTS NOT SHOWN FOR CLARITY

PROJECT NO. U-2524C
GUILFORD COUNTY
STATION: POT 6+23.25 -RPCY4-

SHEET 3 OF 3

STATE OF NORTH CAROLINA
DEPARTMENT OF TRANSPORTATION
RALEIGH

SUBSTRUCTURE END BENT 2

-RAMP C-

DRAWN BY : CLG	DATE : 2-13	DESIGN ENGINEER OF RECORD: P. KELLY	DATE : 5-13
CHECKED BY : PEK	DATE : 3-13		

STV/ Ralph Whitehead Associates, Inc.
1000 West Morehead St., Ste. 200
Charlotte, NC 28208
NC License No. F-0991

REVISIONS						SHEET NO.
NO.	BY:	DATE:	NO.	BY:	DATE:	S-669
1			3			TOTAL SHEETS
2			4			63

5/29/2013 10:00:24 AM R:\station\Finals\(4) End Bent 2 - Sheet 3 of 3.dgn

NOTES :

FOR BERM WIDTH DIMENSIONS, SEE GENERAL DRAWING.

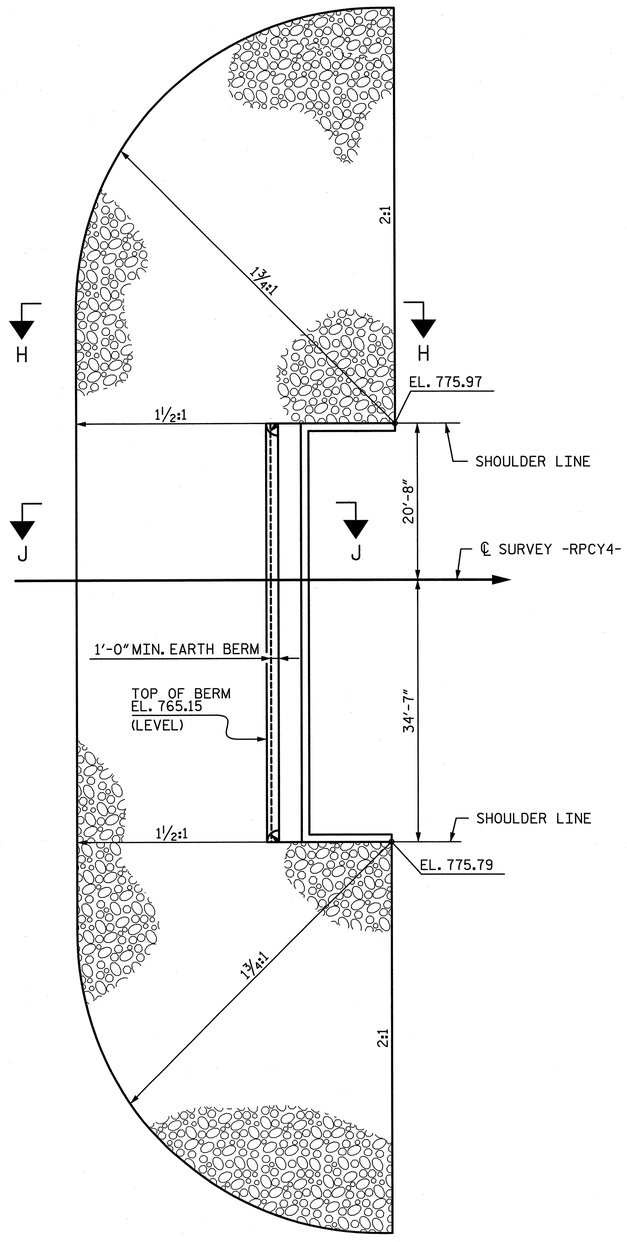

END BENT 2

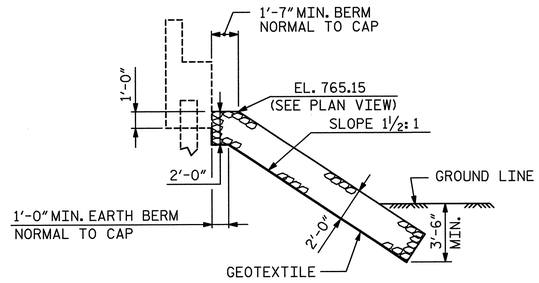

SECTION J-J

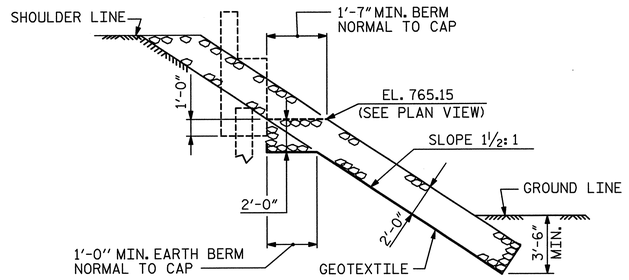

SECTION H-H

ESTIMATED QUANTITIES		
BRIDGE @ STA. 6+23.25 -RPCY4-	RIP RAP CLASS II (2'-0" THICK)	GEOTEXTILE FOR DRAINAGE
	TONS	SQUARE YARDS
END BENT 2	640	710

PROJECT NO. U-2524C

GUILFORD COUNTY

STATION: POT 6+23.25 -RPCY4-

STATE OF NORTH CAROLINA
DEPARTMENT OF TRANSPORTATION
RALEIGH

RIP RAP DETAILS

-RAMP C-

NORTH CAROLINA PROFESSIONAL SEAL 28479 ENGINEER KEVIN G. BAILEY
5-30-13

STV / Ralph Whitehead Associates, Inc.
1000 West Morehead St., Ste. 200
Charlotte, NC 28208
NC License No. F-0991

REVISIONS						SHEET NO.
NO.	BY:	DATE:	NO.	BY:	DATE:	S-670
1			3			TOTAL SHEETS
2			4			83

DRAWN BY : CLG	DATE : 2-13	DESIGN ENGINEER OF RECORD: K. BAILEY	DATE : 5-13
CHECKED BY : TRL	DATE : 2-13		

5/29/2013 10:00:26 AM R:\station\Finals\(42) Rip Rap.dgn

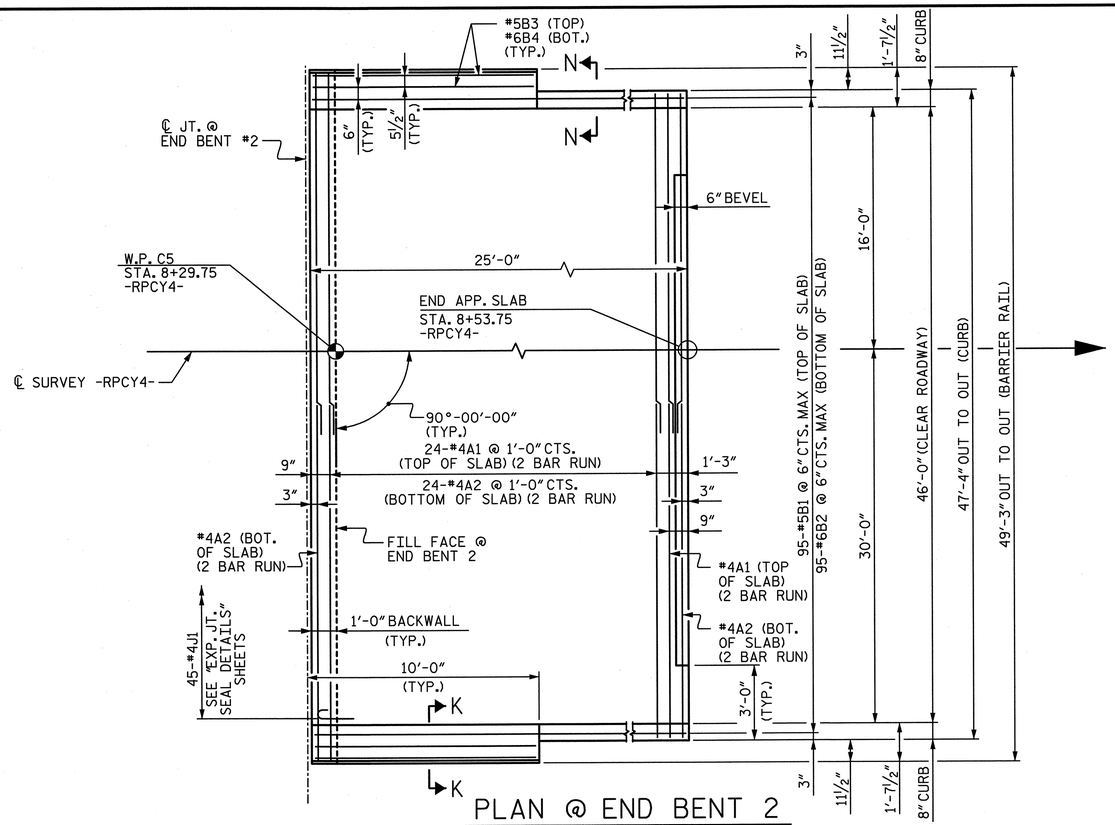

PLAN @ END BENT 2

NOTES:

APPROACH SLAB SHALL NOT BE CONSTRUCTED PRIOR TO COMPLETION OF THE BRIDGE DECK.

FOR REINFORCED BRIDGE APPROACH FILL INCLUDING GEOTEXTILE, IMPERMEABLE GEOMEMBRANE, 4" Ø DRAINAGE PIPE, *78M STONE, AND SELECT MATERIAL, SEE ROADWAY PLANS.

AREA BETWEEN THE WINGWALL AND APPROACH SLAB SHALL BE GRADED TO DRAIN THE WATER AWAY FROM THE FILL FACE OF THE BRIDGE AND SHALL BE PAVED. SEE ROADWAY PLANS.

FOR EXPANSION JOINT SEALS, SEE SPECIAL PROVISIONS.

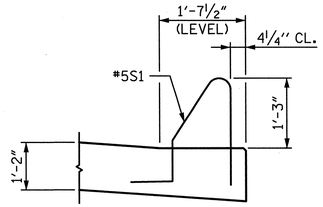

SECTION K-K

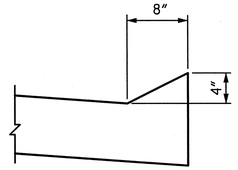

SECTION N-N

BILL OF MATERIAL					
APPROACH SLAB AT EB 2					
BAR	NO.	SIZE	TYPE	LENGTH	WEIGHT
*A1	50	#4	STR	25'-6"	852
A2	52	#4	STR	25'-4"	880
*B1	95	#5	STR	23'-9"	2,353
B2	95	#6	STR	24'-8"	3,520
*B3	4	#5	STR	9'-7"	40
B4	4	#6	STR	9'-7"	58
*J1	45	#4	①	1'-5"	43
REINFORCING STEEL **				LBS.	4,458
*EPOXY COATED REINFORCING STEEL **				LBS.	3,288
CLASS AA CONCRETE **				C.Y.	52.2

BAR TYPE

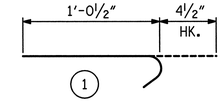

ALL BAR DIMENSIONS ARE OUT TO OUT

** QUANTITIES FOR BARRIER RAIL ARE NOT INCLUDED. SEE SHEET 2 OF 3.

THE QUANTITY OF #4 J1 BARS ON THE BILL OF MATERIAL IS BASED ON 1'-0" CENTERS. J1 BARS SHALL BE PLACED AT EACH VERTICAL STUD ANCHOR BOLT. IN THE EVENT THAT THE NUMBER OF VERTICAL STUD ANCHORS EXCEEDS THE NUMBER OF J1 BARS SPECIFIED, ADDITIONAL J1 BARS WILL NOT BE REQUIRED.

SPLICE LENGTHS		
BAR SIZE	EPOXY COATED	UNCOATED
#4	2'-0"	1'-9"
#5	2'-6"	2'-2"
#6	3'-10"	2'-7"

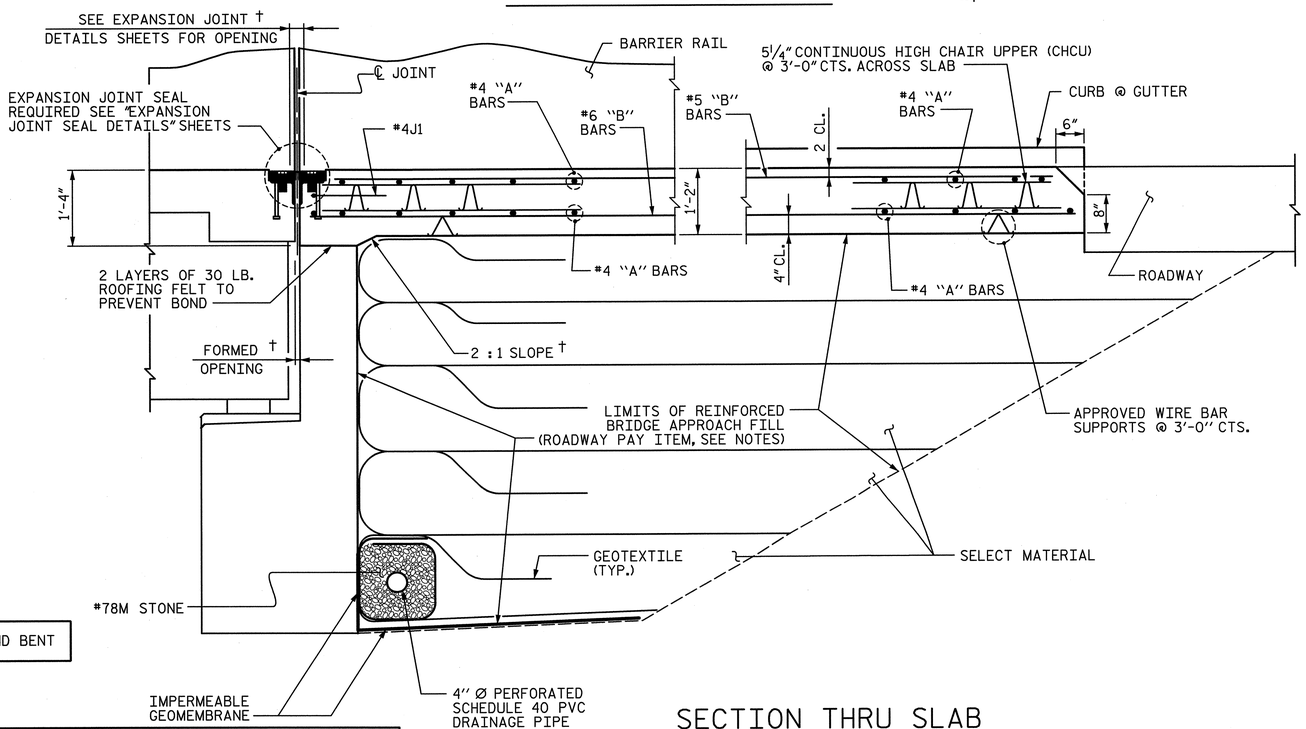

† NORMAL TO END BENT

SECTION THRU SLAB

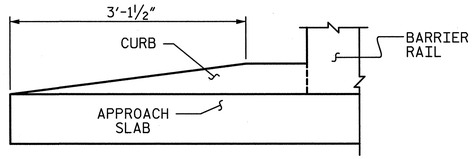

END OF CURB WITHOUT SHOULDER BERM GUTTER

PROJECT NO. U-2524C

GUILFORD COUNTY

STATION: POT 6+23.25 -RPCY4-

SHEET 1 OF 3

STATE OF NORTH CAROLINA
DEPARTMENT OF TRANSPORTATION
RALEIGH

BRIDGE APPROACH SLAB DETAILS

-RAMP C-

NORTH CAROLINA PROFESSIONAL SEAL 28479 ENGINEER KEVIN G. BAILEY
5-30-13

STV / Ralph Whitehead Associates, Inc.
1000 West Morehead St., Ste. 200
Charlotte, NC 28208
NC License No. F-0991

REVISIONS						SHEET NO.
NO.	BY:	DATE:	NO.	BY:	DATE:	S-671
1			3			TOTAL SHEETS
2			4			830

DRAWN BY : CLG DATE : 5-13
CHECKED BY : TRL DATE : 5-13
DESIGN ENGINEER OF RECORD: K. BAILEY DATE : 5-13

5/29/2013 10:00:29 AM R:\ustation\Finals\(43) AppSlab Details 1of 2.dgn

TEMPORARY BERM AND SLOPE DRAIN DETAILS

(TO BE USED WHEN SHOULDER BERM GUTTER IS REQUIRED)

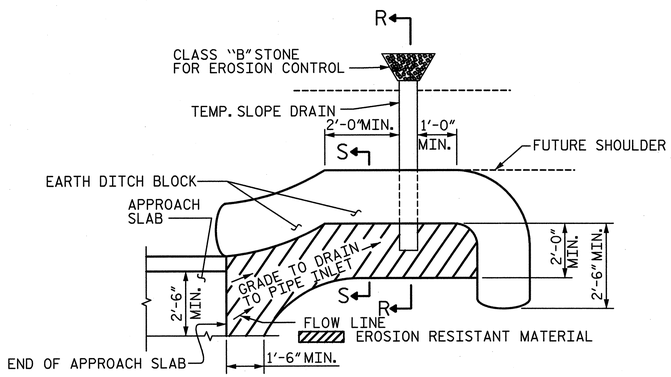

NOTE: IMMEDIATELY AFTER THE CONSTRUCTION OF THE APPROACH SLAB, THE CONTRACTOR SHALL PROVIDE TEMPORARY BERM AND SLOPE DRAIN. CONTRACTOR SHALL GRADE TO PIPE INLET AND PROVIDE EROSION RESISTANT MATERIAL AS SHOWN. THE EROSION RESISTANT MATERIAL SHALL BE EITHER 1) ASPHALT PLANT MIX, TYPE 1 OR TYPE 2, MIN. 2" DEPTH, 2) EROSION CONTROL MAT, OR 3) CONCRETE, AS DIRECTED BY THE ENGINEER. THE SLOPE DRAIN SHALL CONSIST OF A NON-PERFORATED TEMPORARY DRAINAGE PIPE, 12 INCHES IN DIAMETER.

PLAN VIEW

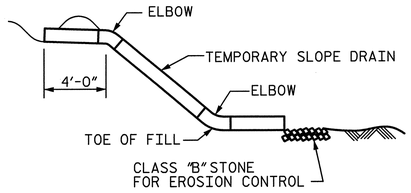

SECTION R-R

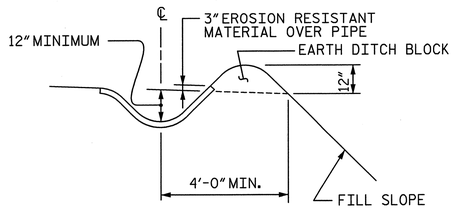

SECTION S-S

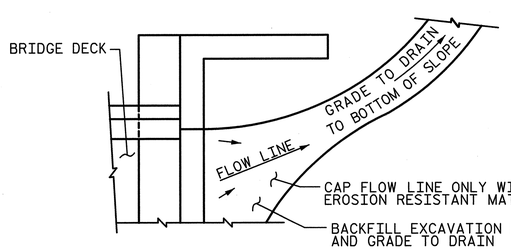

NOTE: IF THE APPROACH SLAB IS NOT CONSTRUCTED IMMEDIATELY AFTER THE BACKFILLING OF THE END BENT EXCAVATION, GRADE TO DRAIN TO THE BOTTOM OF THE SLOPE AND PROVIDE EROSION RESISTANT MATERIAL, SUCH AS FIBERGLASS ROVING OR AS DIRECTED BY THE ENGINEER TO PREVENT SOIL EROSION AND TO PROTECT THE AREA ADJACENT TO THE STRUCTURE. THE CONTRACTOR WILL BE REQUIRED TO REMOVE THESE MATERIALS PRIOR TO CONSTRUCTION OF THE APPROACH SLAB.

TEMPORARY DRAINAGE DETAIL

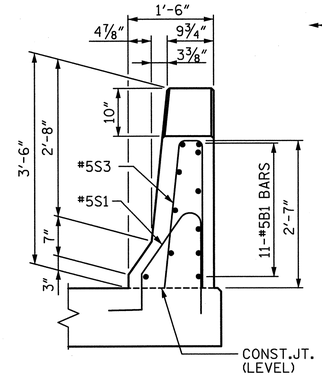

END VIEW

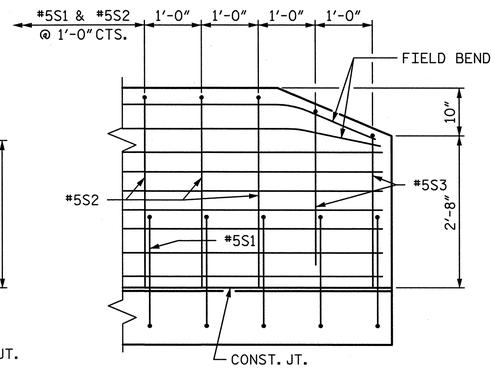

SIDE VIEW

END OF RAIL DETAILS

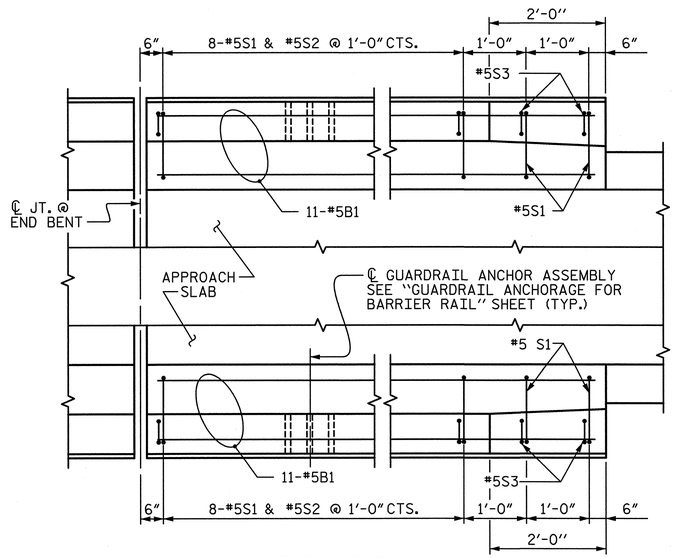

END BENT #2

PLAN OF BARRIER RAIL

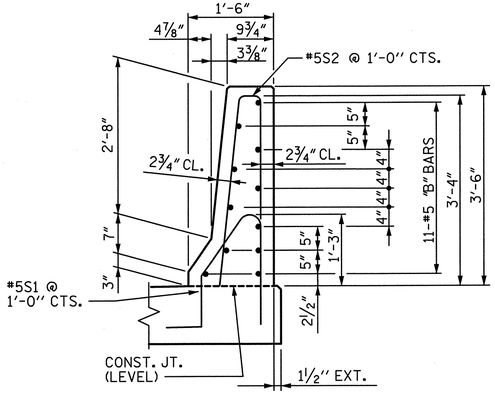

SECTION THRU RAIL

BAR TYPES

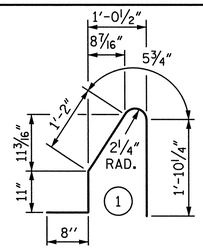

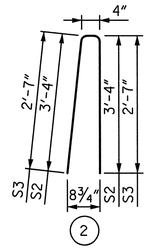

ALL BAR DIMENSIONS ARE OUT TO OUT

BILL OF MATERIAL

BARRIER RAIL ONLY

BAR	NO.	SIZE	TYPE	LENGTH	WEIGHT
✳B1	22	#5	STR	9'-7"	220
✳S1	20	#5	①	5'-1"	106
✳S2	16	#5	②	7'-0"	117
✳S3	4	#5	②	5'-6"	23
✳EPOXY COATED REINFORCING STEEL			LBS.		466
CLASS AA CONCRETE			CU. YDS.		2.7
CONCRETE BARRIER RAIL			20.0 LIN. FT.		

NOTES:

THE COST OF BARRIER RAIL ON THE APPROACH SLAB SHALL BE INCLUDED IN THE LINEAR FOOT CONCRETE BID PRICE "CONCRETE BARRIER RAIL".

THE BARRIER RAIL SHALL NOT BE CAST UNTIL ALL APPROACH SLAB CONCRETE HAS BEEN CAST AND HAS REACHED A MINIMUM COMPRESSIVE STRENGTH OF 3,000 PSI.

ALL REINFORCEMENT IN THE BARRIER RAIL SHALL BE EPOXY COATED.

PROJECT NO. U-2524C

GUILFORD COUNTY

STATION: POT 6+23.25 -RPCY4-

SHEET 2 OF 3

STATE OF NORTH CAROLINA
DEPARTMENT OF TRANSPORTATION
RALEIGH

BRIDGE APPROACH SLAB DETAILS

-RAMP C-

NORTH CAROLINA PROFESSIONAL ENGINEER SEAL 28479 KEVIN G. BAILEY 5-30-13

DRAWN BY : CLG	DATE : 5-13	DESIGN ENGINEER OF RECORD: K. BAILEY	DATE : 5-13
CHECKED BY : TRL	DATE : 5-13		

STV / Ralph Whitehead Associates, Inc.
1000 West Morehead St., Ste. 200
Charlotte, NC 28208
NC License No. F-0991

REVISIONS						SHEET NO.
NO.	BY:	DATE:	NO.	BY:	DATE:	S-672
1			3			TOTAL SHEETS
2			4			83

5/29/2013 10:00:31 AM R:\ustation\Finals\(44) AppSlab Details 2 of 2.dgn

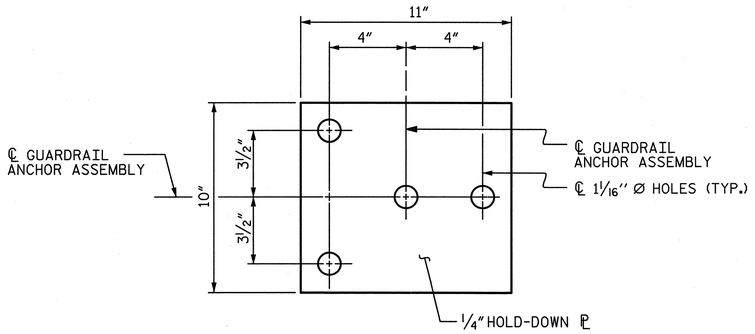

PLAN

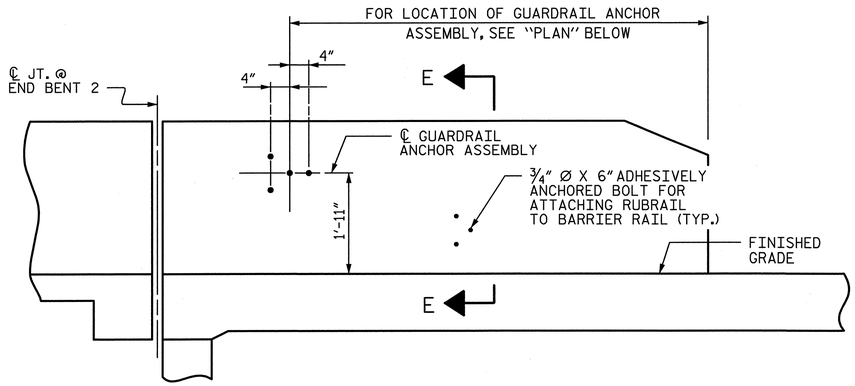

ELEVATION

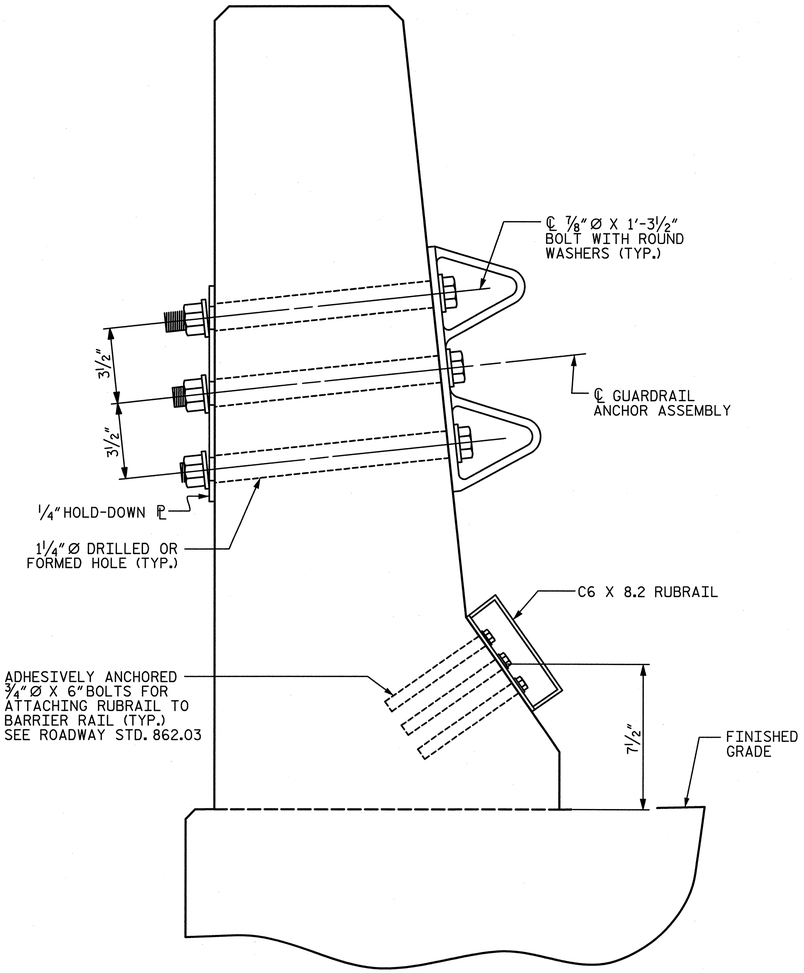

SECTION E-E

GUARDRAIL ANCHOR ASSEMBLY DETAILS

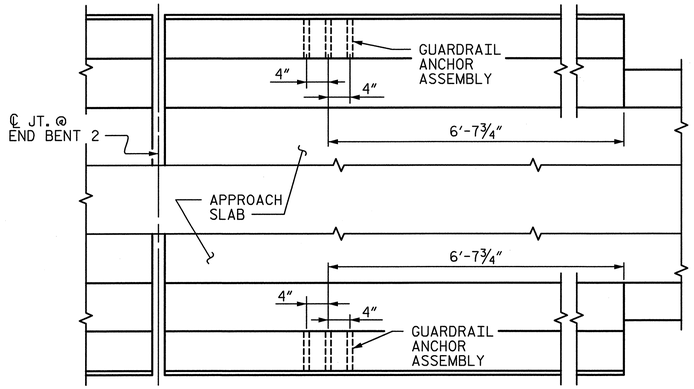

PLAN

LOCATION OF ANCHORS FOR GUARDRAIL

NOTES

THE GUARDRAIL ANCHOR ASSEMBLY SHALL CONSIST OF A ¼" HOLD-DOWN PLATE AND 4 - ⅞" Ø BOLTS WITH NUTS AND WASHERS, RUBRAIL, AND ADHESIVELY ANCHORED BOLTS.

THE HOLD-DOWN PLATE SHALL CONFORM TO AASHTO M270 GRADE 36. AFTER FABRICATION, THE HOLD-DOWN PLATE SHALL BE HOT-DIP GALVANIZED IN ACCORDANCE WITH AASHTO M111.

BOLTS SHALL CONFORM TO THE REQUIREMENTS OF ASTM A307 AND NUTS SHALL CONFORM TO THE REQUIREMENTS OF AASHTO M291. BOLTS, NUTS AND WASHERS SHALL BE GALVANIZED. (AT THE CONTRACTOR'S OPTION, STAINLESS STEEL BOLTS, NUTS AND WASHERS MAY BE USED AS AN ALTERNATE FOR THE ⅞" Ø GALVANIZED BOLTS, NUTS AND WASHERS. THEY SHALL CONFORM TO OR EXCEED THE MECHANICAL REQUIREMENTS OF ASTM A307. THE USE OF THIS ALTERNATE SHALL BE APPROVED BY THE ENGINEER.)

THE GUARDRAIL ANCHOR ASSEMBLY IS REQUIRED AT ALL POINTS WHERE APPROACH GUARDRAIL IS TO BE ATTACHED TO THE END OF BARRIER RAIL. FOR POINTS OF ATTACHMENT, SEE SKETCH.

AFTER INSTALLATION, THE EXPOSED THREAD OF THE BOLT SHALL BE BURRED WITH A SHARP POINTED TOOL.

THE COST OF THE GUARDRAIL ANCHOR ASSEMBLY SHALL BE INCLUDED IN THE UNIT CONTRACT PRICE BID FOR CONCRETE BARRIER RAIL.

THE 1 ¼" Ø HOLES SHALL BE FORMED OR DRILLED WITH A CORE BIT. IMPACT TOOLS WILL NOT BE PERMITTED. ANY CONCRETE DAMAGED BY THIS WORK SHALL BE REPAIRED TO THE SATISFACTION OF THE ENGINEER.

THE C6 X 8.2 RUBRAIL IS TO BE ADHESIVELY ANCHORED TO THE RAIL USING THREE ¾" Ø X 6" BOLTS WITH WASHERS. LEVEL ONE FIELD TESTING IS REQUIRED, AND THE YIELD LOAD OF THE ¾" Ø BOLT IS 12 KIPS. FOR ADHESIVELY ANCHORED ANCHOR BOLTS OR DOWELS, SEE STANDARD SPECIFICATIONS. SEE ROADWAY STANDARD 862.03 FOR DETAILS AND LOCATION OF THE RUBRAIL.

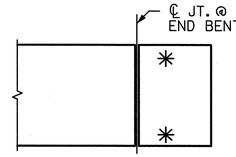

SKETCH SHOWING POINTS OF ATTACHMENTS

✳ DENOTES GUARDRAIL ANCHOR ASSEMBLY

PROJECT NO. U-2524C

GUILFORD COUNTY

STATION: POT 6+23.25 -RPCY4-

SHEET 3 OF 3

STATE OF NORTH CAROLINA
DEPARTMENT OF TRANSPORTATION
RALEIGH

GUARDRAIL ANCHORAGE FOR BARRIER RAIL

-RAMP C-

NORTH CAROLINA PROFESSIONAL SEAL 28479 ENGINEER KEVIN G. BAILEY
5-30-13

REVISIONS						SHEET NO.
NO.	BY:	DATE:	NO.	BY:	DATE:	S-673
1			3			TOTAL SHEETS
2			4			83

STV/ Ralph Whitehead Associates, Inc.
1000 West Morehead St. Ste. 200
Charlotte, NC 28208
NC License No. F-0991

DRAWN BY : MM	DATE : 11-12	DESIGN ENGINEER OF RECORD: K. BAILEY	DATE : 5-13		
CHECKED BY : YT	DATE : 11-12				

5/29/2013 10:00:33 AM R:\station\Finals\(45) Standard Guardrail Attachment.dgn