STATE	STATE PROJECT REFERENCE NO.		
N.C.	U-2524C		
STATE PROJ. NO.	F. A. PROJ. NO.	DESCRIPTION	
34820.2.18	NHF-0708(52)	P.E.	
34820.2.18	NHF-0708(52)	R.O.W./UTILITY	
34820.3.27	NHF-0708(62)	CONSTR.	

STATE OF NORTH CAROLINA
DIVISION OF HIGHWAYS

GUILFORD COUNTY

LOCATION: GREENSBORO–WESTERN LOOP FROM SOUTH OF SR 2137 (OLD OAK RIDGE ROAD) TO NORTH OF US 220 (BATTLEGROUND AVENUE).

TYPE OF WORK: GRADING, DRAINAGE, PAVING, SIGNING, ITS, SIGNALS, STRUCTURES, CULVERTS, RETAINING WALL, AND NOISE WALL

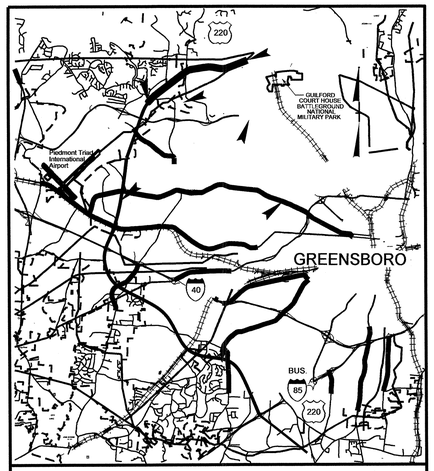

VICINITY MAP

TIP PROJECT: U-2524C

CONTRACT: C203197

STRUCTURES

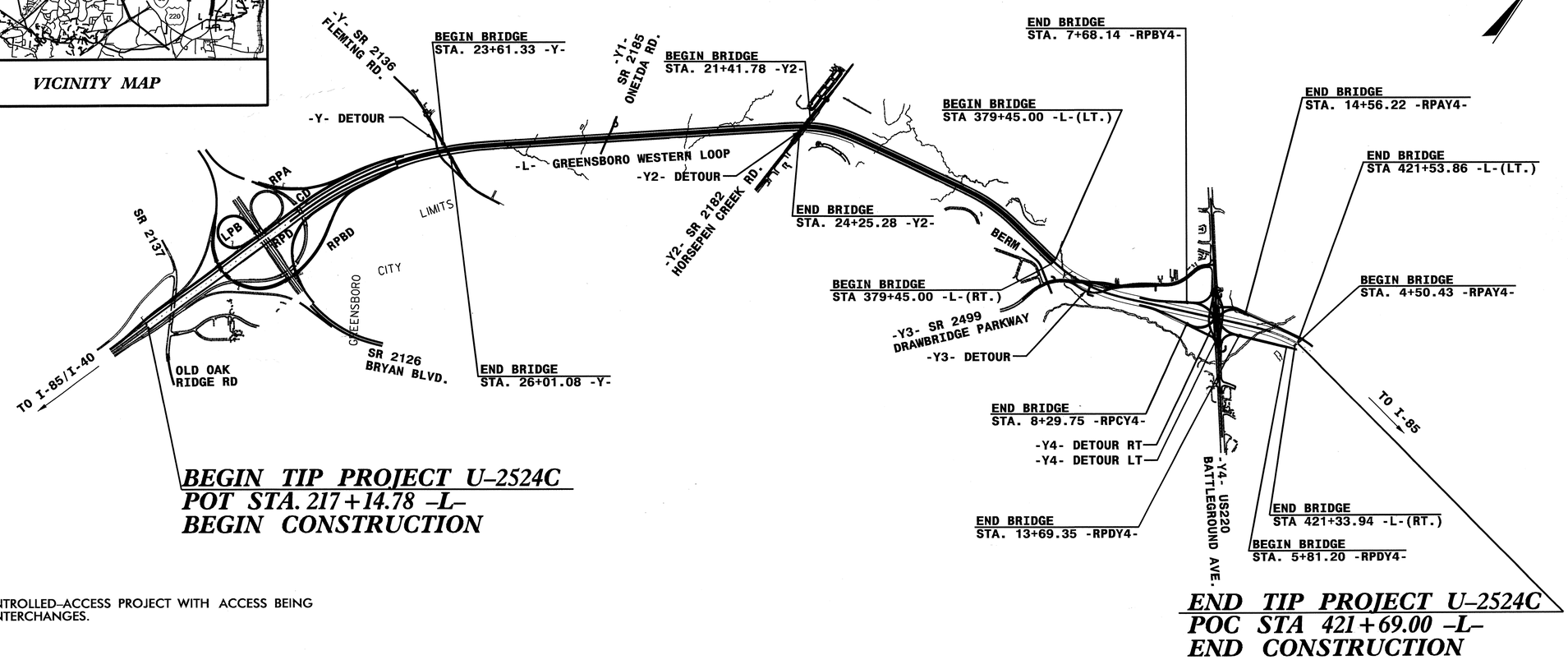

NOTES:
THIS IS A CONTROLLED-ACCESS PROJECT WITH ACCESS BEING LIMITED TO INTERCHANGES.

DESIGN DATA

ADT 2013 = 35,113
ADT 2033 = 45,192
DHV = 11 %
D = 55 %
T = 9 % *
V = 70 MPH
CLASSIFICATION: FREEWAY
4% TTST DUAL 5%
INTERSTATE TIER

PROJECT LENGTH

LENGTH ROADWAY TIP PROJECT U-2524C = 3.077 MILES
LENGTH STRUCTURES TIP PROJECT U-2524C = 0.797 MILES
TOTAL LENGTH OF TIP PROJECT U-2524C = 3.874 MILES

* STRUCTURE LENGTH BASED ON WBL BRIDGES

Prepared for the Office of:
DIVISION OF HIGHWAYS
1000 Birch Ridge Dr., Raleigh NC, 27610

2012 STANDARD SPECIFICATIONS

LETTING DATE:
SEPTEMBER 24, 2013

STATE OF NORTH CAROLINA DEPARTMENT OF TRANSPORTATION

18-JUN-2013 10:18
$$$$$$$$$$$$$$$$$$$$DGN$$$$$$$$$$$$$$$$$$$$
dcrutcher

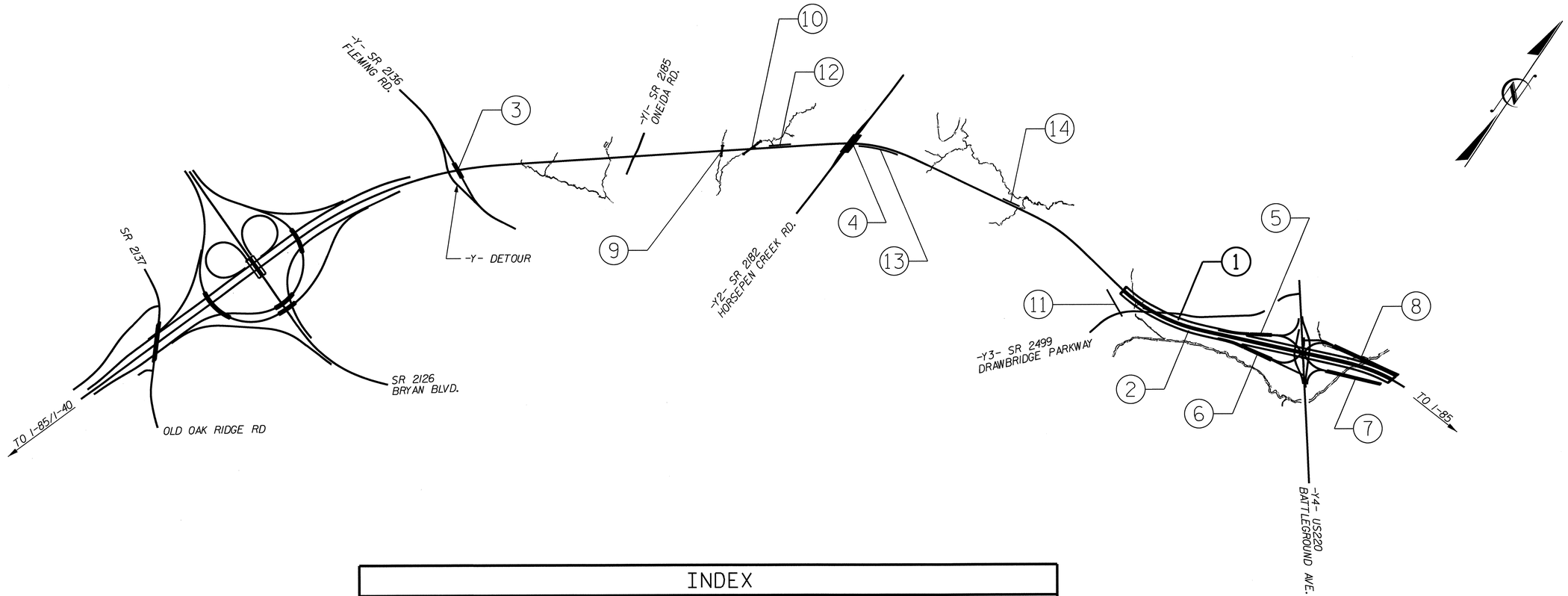

INDEX

STR.	STATION	DESCRIPTION	SHEETS	
1	**407+73.35 -L- (LT)**	**BRIDGE ON I-840 OVER BATTLEGROUND AVE. (LEFT LANE)**	**S-1 THRU S-247**	***PART 1***
2	407+85.82 -L- (RT)	BRIDGE ON I-840 OVER BATTLEGROUND AVE. (RIGHT LANE)	S-248 THRU S-498	***PART 2***
3	274+26.98 -L-	BRIDGE ON SR 2136 (FLEMING RD.) OVER GWL	S-499 THRU S-535	***PART 3***
4	332+65.40 -L-	BRIDGE ON SR 2182 (HORSEPEN CREEK RD.) OVER GWL	S-536 THRU S-585	
5	6+01.72 -RPBY4-	BRIDGE ON RAMP B OVER WETLANDS	S-586 THRU S-628	
6	6+23.25 -RPCY4-	BRIDGE ON RAMP C OVER WETLANDS	S-629 THRU S-673	
7	9+53.33 -RPAY4-	BRIDGE ON RAMP A OVER HORSEPEN CREEK	S-674 THRU S-758	***PART 4***
8	9+75.28 -RPDY4-	BRIDGE ON RAMP D OVER HORSEPEN CREEK	S-759 THRU S-836	
9	313+42.00 -L-	SINGLE 10 X 7 CONCRETE BOX CULVERT	C-1 THRU C-8	
10	317+05.00 -L-	SINGLE 10 X 6 CONCRETE BOX CULVERT	C-9 THRU C-16	
11	373+29.30 -L-	SOUND BARRIER WALL	W-1 THRU W-3	
12	319+00 -L-	MSE RETAINING WALL	W-4 THRU W-9	
13	333+00 -L-	SOIL NAIL WALL		
14	357+25 -L-	MSE RETAINING WALL		

PART 1 OF 4

PROJECT NO. U-2524C
GUILFORD COUNTY
STATION: _____

STATE OF NORTH CAROLINA
DEPARTMENT OF TRANSPORTATION
RALEIGH

INDEX

REVISIONS					
NO.	BY:	DATE:	NO.	BY:	DATE:
1			3		
2			4		

DRAWN BY : W.D. CRUTCHER DATE : 6-13-13
CHECKED BY : D.S. STUTTS DATE : 6-21-13

12-JUL-2013 11:29
S:\PEF\Darrell\u2524c_title_index.dgn
dcrutcher

INDEX OF DRAWINGS

S-1 INDEX OF DRAWINGS
S-2 GENERAL DRAWING PLAN AND ELEVATION, SHEET 1 OF 10
S-3 GENERAL DRAWING PLAN AND ELEVATION, SHEET 2 OF 10
S-4 GENERAL DRAWING PLAN AND ELEVATION, SHEET 3 OF 10
S-5 GENERAL DRAWING PLAN AND ELEVATION, SHEET 4 OF 10
S-6 GENERAL DRAWING PLAN AND ELEVATION, SHEET 5 OF 10
S-7 GENERAL DRAWING PLAN AND ELEVATION, SHEET 6 OF 10
S-8 GENERAL DRAWING PLAN AND ELEVATION, SHEET 7 OF 10
S-9 GENERAL DRAWING PLAN AND ELEVATION, SHEET 8 OF 10
S-10 GENERAL DRAWING PLAN AND ELEVATION, SHEET 9 OF 10
S-11 GENERAL DRAWING PLAN AND ELEVATION, SHEET 10 OF 10
S-12 GENERAL DRAWING FOUNDATION LAYOUT, SHEET 1 OF 5
S-13 GENERAL DRAWING FOUNDATION LAYOUT, SHEET 2 OF 5
S-14 GENERAL DRAWING FOUNDATION LAYOUT, SHEET 3 OF 5
S-15 GENERAL DRAWING FOUNDATION LAYOUT, SHEET 4 OF 5
S-16 GENERAL DRAWING FOUNDATION LAYOUT, SHEET 5 OF 5
S-17 GENERAL DRAWING LONG CHORD LAYOUT, SHEET 1 OF 3
S-18 GENERAL DRAWING LONG CHORD LAYOUT, SHEET 2 OF 3
S-19 GENERAL DRAWING LONG CHORD LAYOUT, SHEET 3 OF 3
S-20 GENERAL DRAWING LOCATION SKETCH
S-21 GENERAL DRAWING TEMPORARY WORK BRIDGE
S-22 GENERAL DRAWING GENERAL NOTES
S-23 GENERAL DRAWING TOTAL BILL OF MATERIAL
S-24 GIRDER ERECTION DETAILS SPAN 6, SHEET 1 OF 3
S-25 GIRDER ERECTION DETAILS UNIT G, SHEET 2 OF 3
S-26 GIRDER ERECTION DETAILS UNIT G, SHEET 3 OF 3
S-27 LRFR SUMMARY FOR PRESTRESSED CONCRETE GIRDERS
S-28 LRFR SUMMARY FOR STEEL GIRDERS
S-29 TYPICAL SECTION UNIT A SPANS 1 & 2
S-30 TYPICAL SECTION UNIT B SPANS 3-5
S-31 TYPICAL SECTION SPAN 6
S-32 TYPICAL SECTION UNIT C SPANS 7 & 8
S-33 TYPICAL SECTION UNIT D SPANS 9-11
S-34 TYPICAL SECTION UNIT E SPANS 12-14
S-35 TYPICAL SECTION SPAN 15
S-36 TYPICAL SECTION SPAN 16
S-37 TYPICAL SECTION UNIT F SPANS 17-20
S-38 TYPICAL SECTION UNIT G & SPAN 24 SPANS 21-24
S-39 TYPICAL SECTION UNIT H SPANS 25 & 26
S-40 TYPICAL SECTION UNIT I SPANS 27-30
S-41 SUPERSTRUCTURE DETAILS, SHEET 1 OF 6
S-42 SUPERSTRUCTURE DETAILS, SHEET 2 OF 6
S-43 SUPERSTRUCTURE DETAILS, SHEET 3 OF 6
S-44 SUPERSTRUCTURE DETAILS, SHEET 4 OF 6
S-45 SUPERSTRUCTURE DETAILS, SHEET 5 OF 6
S-46 SUPERSTRUCTURE DETAILS, SHEET 6 OF 6
S-47 PLAN OF SPANS UNIT A SPANS 1 & 2
S-48 PLAN OF SPANS UNIT B SPANS 3-5, SHEET 1 OF 4
S-49 PLAN OF SPANS UNIT B SPANS 3-5, SHEET 2 OF 4
S-50 PLAN OF SPANS UNIT B SPANS 3-5, SHEET 3 OF 4
S-51 PLAN OF SPANS UNIT B SPANS 3-5, SHEET 4 OF 4
S-52 PLAN OF SPANS SPAN 6, SHEET 1 OF 2
S-53 PLAN OF SPANS SPAN 6, SHEET 2 OF 2
S-54 PLAN OF SPANS UNIT C SPANS 7 & 8, SHEET 1 OF 2
S-55 PLAN OF SPANS UNIT C SPANS 7 & 8, SHEET 2 OF 2
S-56 PLAN OF SPANS UNIT D SPANS 9-11, SHEET 1 OF 2
S-57 PLAN OF SPANS UNIT D SPANS 9-11, SHEET 2 OF 2
S-58 PLAN OF SPANS UNIT E SPANS 12-14, SHEET 1 OF 2
S-59 PLAN OF SPANS UNIT E SPANS 12-14, SHEET 2 OF 2
S-60 PLAN OF SPANS SPAN 15
S-61 PLAN OF SPANS SPAN 16, SHEET 1 OF 2
S-62 PLAN OF SPANS SPAN 16, SHEET 2 OF 2
S-63 PLAN OF SPANS UNIT F SPANS 17-20, SHEET 1 OF 2
S-64 PLAN OF SPANS UNIT F SPANS 17-20, SHEET 2 OF 2
S-65 PLAN OF SPANS UNIT G SPANS 21-23, SHEET 1 OF 3
S-66 PLAN OF SPANS UNIT G SPANS 21-23, SHEET 2 OF 3
S-67 PLAN OF SPANS UNIT G SPANS 21-23, SHEET 3 OF 3
S-68 PLAN OF SPANS SPAN 24
S-69 PLAN OF SPANS UNIT H SPANS 25 & 26, SHEET 1 OF 3
S-70 PLAN OF SPANS UNIT H SPANS 25 & 26, SHEET 2 OF 3
S-71 PLAN OF SPANS UNIT H SPANS 25 & 26, SHEET 3 OF 3
S-72 PLAN OF SPANS UNIT I SPANS 27-30, SHEET 1 OF 2
S-73 PLAN OF SPANS UNIT I SPANS 27-30, SHEET 2 OF 2
S-74 STRUCTURE DRAINAGE SYSTEM DETAILS, SHEET 1 OF 10
S-75 STRUCTURE DRAINAGE SYSTEM DETAILS, SHEET 2 OF 10
S-76 STRUCTURE DRAINAGE SYSTEM DETAILS, SHEET 3 OF 10
S-77 STRUCTURE DRAINAGE SYSTEM DETAILS, SHEET 4 OF 10
S-78 STRUCTURE DRAINAGE SYSTEM DETAILS, SHEET 5 OF 10
S-79 STRUCTURE DRAINAGE SYSTEM DETAILS, SHEET 6 OF 10
S-80 STRUCTURE DRAINAGE SYSTEM DETAILS, SHEET 7 OF 10
S-81 STRUCTURE DRAINAGE SYSTEM DETAILS, SHEET 8 OF 10
S-82 STRUCTURE DRAINAGE SYSTEM DETAILS, SHEET 9 OF 10
S-83 STRUCTURE DRAINAGE SYSTEM DETAILS, SHEET 10 OF 10
S-84 SUPERSTRUCTURE DECK POUR DIAGRAMS, SHEET 1 OF 2
S-85 SUPERSTRUCTURE DECK POUR DIAGRAMS, SHEET 2 OF 2
S-86 FRAMING PLAN UNIT A SPANS 1 & 2, SHEET 1 OF 14
S-87 FRAMING PLAN UNIT B SPANS 3-5, SHEET 2 OF 14
S-88 FRAMING PLAN SPAN 6, SHEET 3 OF 14
S-89 FRAMING PLAN UNIT C SPANS 7 & 8, SHEET 4 OF 14
S-90 FRAMING PLAN UNIT D SPANS 9-11, SHEET 5 OF 14
S-91 FRAMING PLAN UNIT E SPANS 12-14, SHEET 6 OF 14
S-92 FRAMING PLAN SPAN 15, SHEET 7 OF 14
S-93 FRAMING PLAN SPAN 16, SHEET 8 OF 14
S-94 FRAMING PLAN UNIT F SPANS 17-20, SHEET 9 OF 14
S-95 FRAMING PLAN UNIT G SPANS 21-23, SHEET 10 OF 14
S-96 FRAMING PLAN SPAN 24, SHEET 11 OF 14
S-97 FRAMING PLAN UNIT H SPANS 25 & 26, SHEET 12 OF 14
S-98 FRAMING PLAN UNIT H LAYOUT, SHEET 13 OF 14
S-99 FRAMING PLAN UNIT I SPANS 27-30, SHEET 14 OF 14
S-100 PRESTRESSED CONCRETE MODIFIED 72"BULB TEE GIRDER PLAN AND ELEVATION, SHEET 1 OF 12
S-101 PRESTRESSED CONCRETE MODIFIED 72"BULB TEE GIRDER PLAN AND ELEVATION, SHEET 2 OF 12
S-102 PRESTRESSED CONCRETE MODIFIED 72"BULB TEE GIRDER PLAN AND ELEVATION, SHEET 3 OF 12
S-103 PRESTRESSED CONCRETE MODIFIED 74"BULB TEE GIRDER PLAN AND ELEVATION, SHEET 4 OF 12
S-104 PRESTRESSED CONCRETE MODIFIED 74"BULB TEE GIRDER PLAN AND ELEVATION, SHEET 5 OF 12
S-105 PRESTRESSED CONCRETE MODIFIED 72"BULB TEE GIRDER STRAND PATTERNS, SHEET 6 OF 12
S-106 PRESTRESSED CONCRETE MODIFIED 72"/74"BULB TEE GIRDER STRAND PATTERNS, SHEET 7 OF 12
S-107 ~~PRESTRESSED CONCRETE MODIFIED BULB TEE GIRDER DIAPHRAGM DETAILS,~~ SHEET 8 OF 12
S-108 PRESTRESSED CONCRETE MODIFIED BULB TEE GIRDER TABLE, SHEET 9 OF 12
S-109 PRESTRESSED CONCRETE MODIFIED BULB TEE GIRDER TABLE, SHEET 10 OF 12
S-110 PRESTRESSED CONCRETE MODIFIED BULB TEE GIRDER TABLE, SHEET 11 OF 12
S-111 PRESTRESSED CONCRETE MODIFIED BULB TEE GIRDER DETAILS, SHEET 12 OF 12
S-112 INTERMEDIATE STEEL DIAPHRAGM DETAILS FOR PRESTRESSED CONCRETE MODIFIED BULB TEE GIRDERS
S-113 STRUCTURAL STEEL GIRDER ELEVATION SPAN 6, SHEET 1 OF 17
S-114 STRUCTURAL STEEL GIRDER ELEVATION SPAN 6, SHEET 2 OF 17
S-115 STRUCTURAL STEEL GIRDER ELEVATION UNIT G SPAN 21, SHEET 3 OF 17
S-116 STRUCTURAL STEEL GIRDER ELEVATION UNIT G SPAN 22, SHEET 4 OF 17
S-117 STRUCTURAL STEEL GIRDER ELEVATION UNIT G SPAN 23, SHEET 5 OF 17
S-118 STRUCTURAL STEEL GIRDER ELEVATION SPAN 24, SHEET 6 OF 17
S-119 STRUCTURAL STEEL GIRDER ELEVATION SPAN 24, SHEET 7 OF 17
S-120 STRUCTURAL STEEL GIRDER ELEVATION UNIT H SPAN 25, SHEET 8 OF 17
S-121 STRUCTURAL STEEL GIRDER ELEVATION UNIT H SPAN 26, SHEET 9 OF 17
S-122 STRUCTURAL STEEL DIAPHRAGM DETAILS, SHEET 10 OF 17
S-123 STRUCTURAL STEEL DETAILS, SHEET 11 OF 17
S-124 STRUCTURAL STEEL DETAILS, SHEET 12 OF 17
S-125 STRUCTURAL STEEL BOLTED FIELD SPLICE SPAN 6, SHEET 13 OF 17
S-126 STRUCTURAL STEEL BOLTED FIELD SPLICE UNIT G SPANS 21-23, SHEET 14 OF 17
S-127 STRUCTURAL STEEL BOLTED FIELD SPLICE SPAN 24, SHEET 15 OF 17
S-128 STRUCTURAL STEEL BOLTED FIELD SPLICE UNIT H SPANS 25 & 26, SHEET 16 OF 17
S-129 STRUCTURAL STEEL LATERAL BRACING, SHEET 17 OF 17
S-130 ELASTOMERIC BEARING DETAILS
S-131 POT BEARINGS, SHEET 1 OF 2
S-132 POT BEARING DETAILS, SHEET 2 OF 2
S-133 PRESTRESSED CONCRETE MODIFIED BULB TEE GIRDER CAMBERS, SHEET 1 OF 7
S-134 PRESTRESSED CONCRETE MODIFIED BULB TEE GIRDER CAMBERS, SHEET 2 OF 7
S-135 PRESTRESSED CONCRETE MODIFIED BULB TEE GIRDER CAMBERS, SHEET 3 OF 7
S-136 PRESTRESSED CONCRETE MODIFIED BULB TEE GIRDER CAMBERS, SHEET 4 OF 7
S-137 PRESTRESSED CONCRETE MODIFIED BULB TEE GIRDER CAMBERS, SHEET 5 OF 7
S-138 PRESTRESSED CONCRETE MODIFIED BULB TEE GIRDER CAMBERS, SHEET 6 OF 7
S-139 PRESTRESSED CONCRETE MODIFIED BULB TEE GIRDER CAMBERS, SHEET 7 OF 7
S-140 STEEL GIRDER CAMBERS SPAN 6, SHEET 1 OF 8
S-141 STEEL GIRDER CAMBERS SPAN 6, SHEET 2 OF 8
S-142 STEEL GIRDER CAMBERS UNIT G SPAN 21, SHEET 3 OF 8
S-143 STEEL GIRDER CAMBERS UNIT G SPAN 22, SHEET 4 OF 8
S-144 STEEL GIRDER CAMBERS UNIT G SPAN 23, SHEET 5 OF 8
S-145 STEEL GIRDER CAMBERS SPAN 24, SHEET 6 OF 8
S-146 STEEL GIRDER CAMBERS UNIT H SPAN 25, SHEET 7 OF 8
S-147 STEEL GIRDER CAMBERS UNIT H SPAN 26, SHEET 8 OF 8
S-148 STEEL GIRDER CAMBERS SCHEMATIC CAMBER ~~ORDINATES~~ UNITS G & H
S-149 CONCRETE BARRIER RAIL, SHEET 1 OF 8
S-150 PLAN OF RAILS CONCRETE BARRIER RAIL UNITS A & B, SHEET 2 OF 8
S-151 PLAN OF RAILS CONCRETE BARRIER RAIL SPAN 6 & UNIT C, SHEET 3 OF 8
S-152 PLAN OF RAILS CONCRETE BARRIER RAIL UNIT D & E, SHEET 4 OF 8
S-153 PLAN OF RAILS CONCRETE BARRIER RAIL SPANS 15, 16 & UNIT F, SHEET 5 OF 8
S-154 PLAN OF RAILS CONCRETE BARRIER RAIL UNIT G & SPAN 24, SHEET 6 OF 8
S-155 PLAN OF RAILS CONCRETE BARRIER RAIL UNITS H & I, SHEET 7 OF 8
S-156 PLAN OF RAILS CONCRETE BARRIER RAIL TRANSITION ZONE DETAILS, SHEET 8 OF 8
S-157 GUARDRAIL ANCHORAGE FOR BARRIER RAIL
S-158 TRANSITION ZONE DETAILS, SHEET 1 OF 2
S-159 TRANSITION ZONE DETAILS, SHEET 2 OF 2
S-160 EXPANSION JOINT SEAL DETAILS, SHEET 1 OF 2
S-161 EXPANSION JOINT SEAL DETAILS FOR BARRIER RAIL, SHEET 2 OF 2
S-162 MODULAR EXPANSION JOINT SEAL DETAILS FOR BARRIER RAIL
S-163 PAVEMENT MARKING ALIGNMENT
S-164 SUPERSTRUCTURE BILL OF MATERIALS, SHEET 1 OF 8
S-165 SUPERSTRUCTURE BILL OF MATERIALS, SHEET 2 OF 8
~~S-166 SUPERSTRUCTURE BILL OF MATERIALS, SHEET 3 OF 8~~
S-167 SUPERSTRUCTURE BILL OF MATERIALS, SHEET 4 OF 8
S-168 SUPERSTRUCTURE BILL OF MATERIALS, SHEET 5 OF 8
S-169 SUPERSTRUCTURE BILL OF MATERIALS, SHEET 6 OF 8
S-170 SUPERSTRUCTURE BILL OF MATERIALS, SHEET 7 OF 8
S-171 SUPERSTRUCTURE BILL OF MATERIALS, SHEET 8 OF 8
S-172 END BENT 1, SHEET 1 OF 3
S-173 END BENT 1, SHEET 2 OF 3
S-174 END BENT 1, SHEET 3 OF 3
S-175 BENT 1 PLAN & ELEVATION, SHEET 1 OF 3
S-176 BENT 1 DETAILS, SHEET 2 OF 3
S-177 BENT 1 DETAILS & BILL OF MATERIAL, SHEET 3 OF 3
S-178 BENT 2 PLAN & ELEVATION, SHEET 1 OF 3
S-179 BENT 2 DETAILS, SHEET 2 OF 3
S-180 BENT 2 DETAILS & BILL OF MATERIAL, SHEET 3 OF 3
S-181 BENT 3 PLAN & ELEVATION, SHEET 1 OF 3
S-182 BENT 3 DETAILS, SHEET 2 OF 3
S-183 BENT 3 DETAILS & BILL OF MATERIAL, SHEET 3 OF 3
S-184 BENT 4 PLAN & ELEVATION, SHEET 1 OF 3
S-185 BENT 4 DETAILS, SHEET 2 OF 3
S-186 BENT 4 DETAILS & BILL OF MATERIAL, SHEET 3 OF 3
S-187 BENT 5 PLAN & ELEVATION, SHEET 1 OF 3
S-188 BENT 5 DETAILS, SHEET 2 OF 3
S-189 BENT 5 DETAILS & BILL OF MATERIAL, SHEET 3 OF 3
S-190 BENT 6 PLAN & ELEVATION, SHEET 1 OF 3
S-191 BENT 6 DETAILS, SHEET 2 OF 3
S-192 BENT 6 DETAILS & BILL OF MATERIAL, SHEET 3 OF 3
S-193 BENT 7 PLAN & ELEVATION, SHEET 1 OF 3
S-194 BENT 7 DETAILS, SHEET 2 OF 3
S-195 BENT 7 DETAILS & BILL OF MATERIAL, SHEET 3 OF 3
S-196 BENT 8 PLAN & ELEVATION, SHEET 1 OF 3
S-197 BENT 8 DETAILS, SHEET 2 OF 3
S-198 BENT 8 DETAILS & BILL OF MATERIAL, SHEET 3 OF 3
S-199 BENTS 9 & 10 PLAN & ELEVATION, SHEET 1 OF 3
S-200 BENTS 9 & 10 DETAILS, SHEET 2 OF 3
S-201 BENTS 9 & 10 DETAILS & BILL OF MATERIAL, SHEET 3 OF 3
S-202 BENTS 11 - 13 PLAN & ELEVATION, SHEET 1 OF 3
S-203 BENTS 11 - 13 DETAILS, SHEET 2 OF 3
S-204 BENTS 11 - 13 DETAILS & BILL OF MATERIAL, SHEET 3 OF 3
S-205 BENT 14 PLAN & ELEVATION, SHEET 1 OF 3
S-206 BENT 14 DETAILS, SHEET 2 OF 3
S-207 BENT 14 DETAILS & BILL OF MATERIAL, SHEET 3 OF 3
S-208 BENT 15 PLAN & ELEVATION, SHEET 1 OF 3
S-209 BENT 15 DETAILS, SHEET 2 OF 3
S-210 BENT 15 DETAILS & BILL OF MATERIAL, SHEET 3 OF 3
S-211 BENT 16 PLAN & ELEVATION, SHEET 1 OF 3
S-212 BENT 16 DETAILS, SHEET 2 OF 3
S-213 BENT 16 DETAILS & BILL OF MATERIAL, SHEET 3 OF 3
S-214 BENTS 17 - 19 PLAN & ELEVATION, SHEET 1 OF 3
S-215 BENTS 17 - 19 DETAILS, SHEET 2 OF 3
S-216 BENTS 17 - 19 DETAILS & BILL OF MATERIAL, SHEET 3 OF 3
S-217 BENT 20 PLAN & ELEVATION, SHEET 1 OF 3
S-218 BENT 20 DETAILS, SHEET 2 OF 3
S-219 BENT 20 DETAILS & BILL OF MATERIAL, SHEET 3 OF 3
S-220 BENTS 21 & 22 PLAN & ELEVATION, SHEET 1 OF 3
S-221 BENTS 21 & 22 DETAILS, SHEET 2 OF 3
S-222 BENTS 21 & 22 DETAILS & BILL OF MATERIAL, SHEET 3 OF 3
S-223 BENT 23 PLAN & ELEVATION, SHEET 1 OF 3
S-224 BENT 23 DETAILS, SHEET 2 OF 3
S-225 BENT 23 DETAILS & BILL OF MATERIAL, SHEET 3 OF 3
S-226 BENT 24 PLAN & ELEVATION, SHEET 1 OF 3
S-227 BENT 24 DETAILS, SHEET 2 OF 3
S-228 BENT 24 DETAILS & BILL OF MATERIAL, SHEET 3 OF 3
S-229 BENT 25 PLAN & ELEVATION, SHEET 1 OF 3
S-230 BENT 25 DETAILS, SHEET 2 OF 3
S-231 BENT 25 DETAILS & BILL OF MATERIAL, SHEET 3 OF 3
S-232 BENT 26 PLAN & ELEVATION, SHEET 1 OF 3
S-233 BENT 26 DETAILS, SHEET 2 OF 3
S-234 BENT 26 DETAILS & BILL OF MATERIAL, SHEET 3 OF 3
S-235 BENTS 27 & 28 PLAN & ELEVATION, SHEET 1 OF 3
S-236 BENTS 27 & 28 DETAILS, SHEET 2 OF 3
S-237 BENTS 27 & 28 DETAILS & BILL OF MATERIAL, SHEET 3 OF 3
S-238 BENT 29 PLAN & ELEVATION, SHEET 1 OF 3
S-239 BENT 29 DETAILS, SHEET 2 OF 3
S-240 BENT 29 DETAILS & BILL OF MATERIAL, SHEET 3 OF 3
S-241 END BENT 2, SHEET 1 OF 3
S-242 END BENT 2, SHEET 2 OF 3
S-243 END BENT 2, SHEET 3 OF 3
S-244 RIP RAP DETAILS
S-245 BRIDGE APPROACH SLAB DETAILS, SHEET 1 OF 3
S-246 BRIDGE APPROACH SLAB DETAILS, SHEET 2 OF 3
S-247 BRIDGE APPROACH SLAB DETAILS, SHEET 3 OF 3

NORTH CAROLINA PROFESSIONAL SEAL 18165 ENGINEER MARK F. ROBBINS 5-30-13

NORTH CAROLINA PROFESSIONAL SEAL 28479 ENGINEER KEVIN G. BAILEY 5-30-13

PROJECT NO. U-2524C
GUILFORD COUNTY
STATION: POT 407+73.35 -L- = POT 29+32.06 -Y4-

STATE OF NORTH CAROLINA
DEPARTMENT OF TRANSPORTATION
RALEIGH

INDEX OF DRAWINGS

-LEFT LANE-

REVISIONS						SHEET NO.
NO.	BY:	DATE:	NO.	BY:	DATE:	S-1
1			3			TOTAL SHEETS
2			4			836

STV / Ralph Whitehead Associates, Inc.
1000 West Morehead St., Ste. 200
Charlotte, NC 28208
NC License No. F-0991

DRAWN BY : KGB DATE : 12-12
CHECKED BY : TRL DATE : 4-13
DESIGN ENGINEER OF RECORD: K. BAILEY DATE : 5-13

R:\ustation\Finals\Index of Sheets.dgn 5:26:44 PM 5/30/2013

F.A. PROJ. NO. NHF-0708(62)

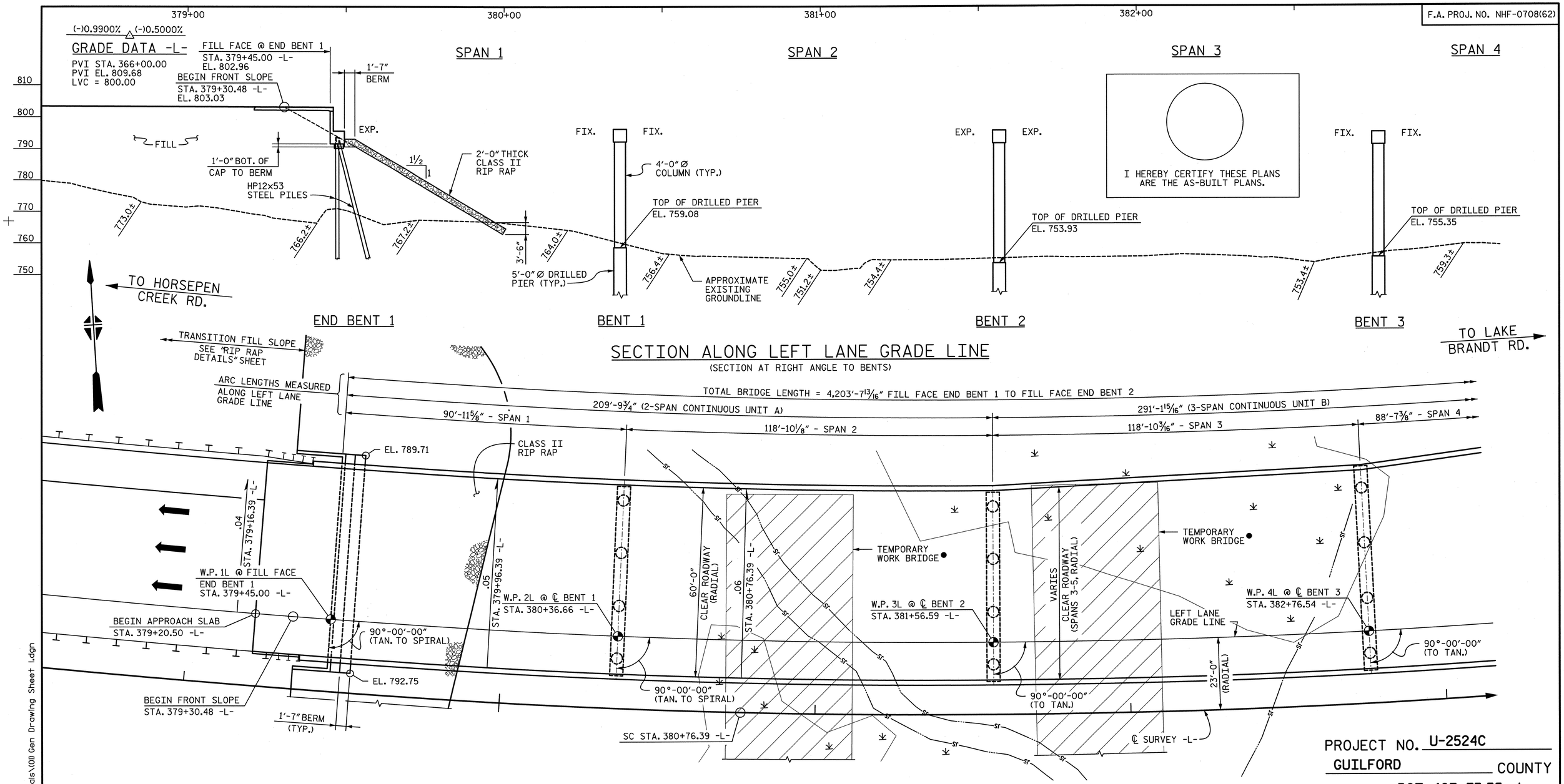

● SEE "GENERAL DRAWING TEMPORARY WORK BRIDGE LAYOUT" FOR ADDITIONAL INFORMATION.

PLAN

(PILES NOT SHOWN FOR CLARITY)

HORIZ. CURVE DATA -L-

PIs = 379+16.55	PI = 385+42.44	PIs = 391+58.05
θs = 5°30'01.4" (LT.)	Δ = 21°07'10.9" (LT.)	θs = 5°30'01.4" (LT.)
Ls = 480.00'	D = 2°17'30.6"	Ls = 480.00'
LT = 320.15'	L = 921.52'	LT = 320.15'
ST = 160.14'	T = 466.05'	ST = 160.14'
	R = 2,500.00'	

PROJECT NO. U-2524C

GUILFORD COUNTY

STATION: POT 407+73.35 -L-
= POT 29+32.06 -Y4-

SHEET 1 OF 10

BRIDGE NO. 1127

NORTH CAROLINA PROFESSIONAL ENGINEER SEAL 18165 MARK F. ROBBINS 6-7-13

NORTH CAROLINA PROFESSIONAL ENGINEER SEAL 28479 KEVIN G. BAILEY 6-7-13

STATE OF NORTH CAROLINA
DEPARTMENT OF TRANSPORTATION
RALEIGH

GENERAL DRAWING
PLAN AND ELEVATION
BRIDGE ON I-840
OVER BATTLEGROUND AVE.
-LEFT LANE-

STV / Ralph Whitehead Associates, Inc.
1000 West Morehead St. Ste. 200
Charlotte, NC 28208
NC License No. F-0991

REVISIONS						SHEET NO.
NO.	BY:	DATE:	NO.	BY:	DATE:	S-2
1			3			TOTAL SHEETS
2			4			836

DRAWN BY : ATH	DATE : 3-12	DESIGN ENGINEER OF RECORD: P. KELLY	DATE : 5-13
CHECKED BY : MLO/AJP	DATE : 3-12		

6/7/2013 10:32:00 AM R:\ustation\Finals\(01) Gen Drawing Sheet 1.dgn

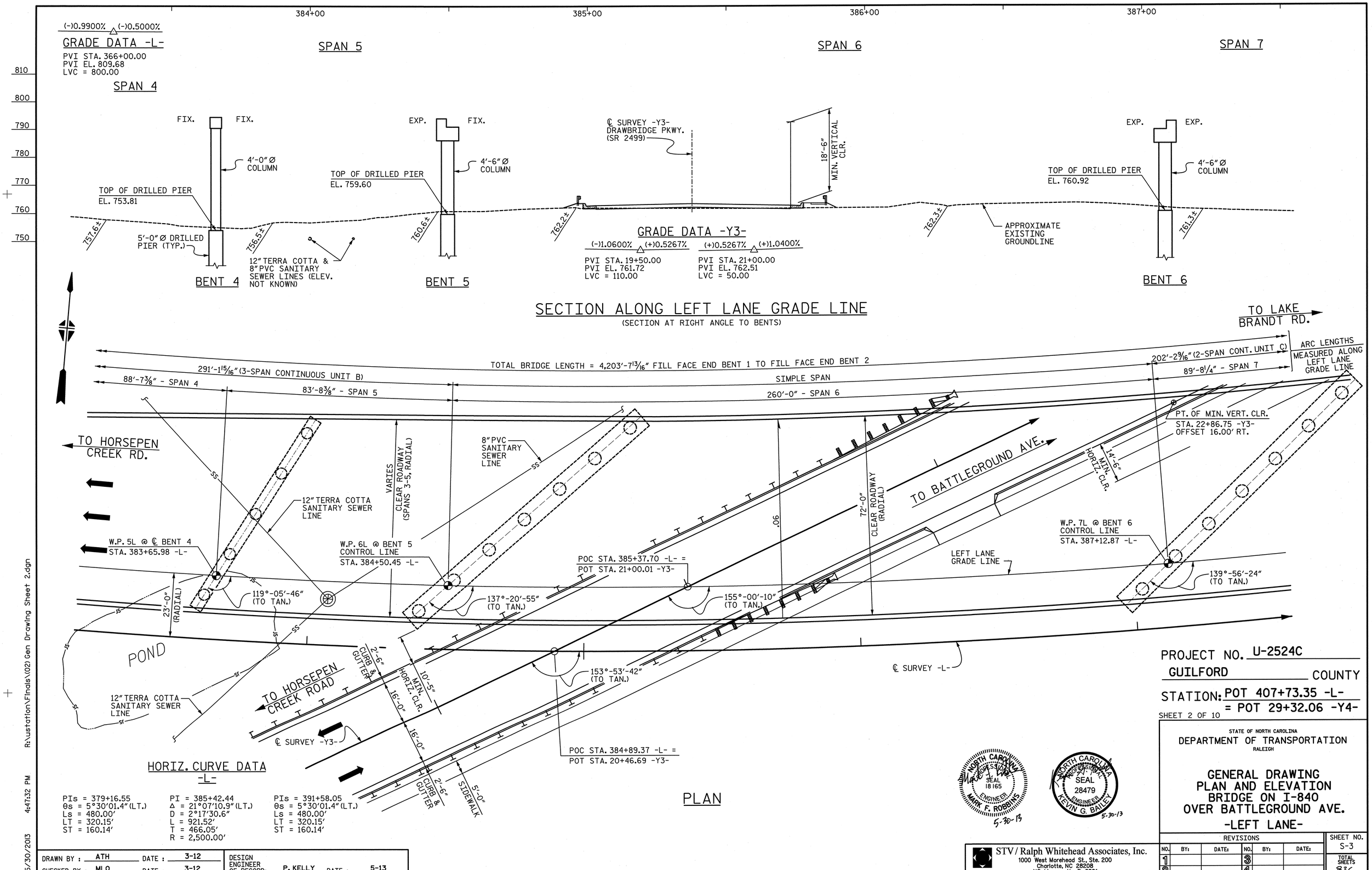
384+00
385+00
386+00
387+00
(-)0.9900% (-)0.5000%
GRADE DATA -L-
PVI STA. 366+00.00
PVI EL. 809.68
LVC = 800.00
SPAN 4
SPAN 5
SPAN 6
SPAN 7
810
800
790
780
770
760
750
FIX.
FIX.
EXP.
FIX.
EXP.
EXP.
4'-0" Ø COLUMN
4'-6" Ø COLUMN
4'-6" Ø COLUMN
TOP OF DRILLED PIER
EL. 753.81
TOP OF DRILLED PIER
EL. 759.60
TOP OF DRILLED PIER
EL. 760.92
℄ SURVEY -Y3-
DRAWBRIDGE PKWY.
(SR 2499)
18'-6" MIN. VERTICAL CLR.
757.6±
756.5±
760.6±
762.2±
762.3±
761.3±
5'-0" Ø DRILLED PIER (TYP.)
12" TERRA COTTA & 8" PVC SANITARY SEWER LINES (ELEV. NOT KNOWN)
APPROXIMATE EXISTING GROUNDLINE
BENT 4
BENT 5
BENT 6
GRADE DATA -Y3-
(-)1.0600% (+)0.5267%
PVI STA. 19+50.00
PVI EL. 761.72
LVC = 110.00
(+)0.5267% (+)1.0400%
PVI STA. 21+00.00
PVI EL. 762.51
LVC = 50.00
SECTION ALONG LEFT LANE GRADE LINE
(SECTION AT RIGHT ANGLE TO BENTS)
TO LAKE BRANDT RD.
TOTAL BRIDGE LENGTH = 4,203'-7 13/16" FILL FACE END BENT 1 TO FILL FACE END BENT 2
291'-1 15/16" (3-SPAN CONTINUOUS UNIT B)
88'-7 3/8" - SPAN 4
83'-8 3/8" - SPAN 5
SIMPLE SPAN
260'-0" - SPAN 6
202'-2 9/16" (2-SPAN CONT. UNIT C)
89'-8 1/4" - SPAN 7
ARC LENGTHS MEASURED ALONG LEFT LANE GRADE LINE
TO HORSEPEN CREEK RD.
TO BATTLEGROUND AVE.
VARIES
CLEAR ROADWAY (SPANS 3-5, RADIAL)
8" PVC SANITARY SEWER LINE
12" TERRA COTTA SANITARY SEWER LINE
72'-0" CLEAR ROADWAY (RADIAL)
.06
PT. OF MIN. VERT. CLR.
STA. 22+86.75 -Y3-
OFFSET 16.00' RT.
14'-6" MIN. HORIZ. CLR.
W.P. 5L @ ℄ BENT 4
STA. 383+65.98 -L-
W.P. 6L @ BENT 5
CONTROL LINE
STA. 384+50.45 -L-
POC STA. 385+37.70 -L- =
POT STA. 21+00.01 -Y3-
W.P. 7L @ BENT 6
CONTROL LINE
STA. 387+12.87 -L-
LEFT LANE GRADE LINE
119°-05'-46" (TO TAN.)
137°-20'-55" (TO TAN.)
155°-00'-10" (TO TAN.)
139°-56'-24" (TO TAN.)
23'-0" (RADIAL)
POND
CURB & GUTTER
2'-6"
10'-5" MIN. HORIZ. CLR.
16'-0"
16'-0"
TO HORSEPEN CREEK ROAD
℄ SURVEY -Y3-
153°-53'-42" (TO TAN.)
℄ SURVEY -L-
12" TERRA COTTA SANITARY SEWER LINE
POC STA. 384+89.37 -L- =
POT STA. 20+46.69 -Y3-
CURB & GUTTER
2'-6"
SIDEWALK
5'-0"
HORIZ. CURVE DATA
-L-
PIs = 379+16.55
θs = 5°30'01.4" (LT.)
Ls = 480.00'
LT = 320.15'
ST = 160.14'
PI = 385+42.44
Δ = 21°07'10.9" (LT.)
D = 2°17'30.6"
L = 921.52'
T = 466.05'
R = 2,500.00'
PIs = 391+58.05
θs = 5°30'01.4" (LT.)
Ls = 480.00'
LT = 320.15'
ST = 160.14'
PLAN
NORTH CAROLINA PROFESSIONAL SEAL 18165 ENGINEER MARK F. ROBBINS
5-30-13
NORTH CAROLINA PROFESSIONAL SEAL 28479 ENGINEER KEVIN G. BAILEY
5-30-13
PROJECT NO. U-2524C
GUILFORD COUNTY
STATION: POT 407+73.35 -L-
= POT 29+32.06 -Y4-
SHEET 2 OF 10
STATE OF NORTH CAROLINA
DEPARTMENT OF TRANSPORTATION
RALEIGH
GENERAL DRAWING
PLAN AND ELEVATION
BRIDGE ON I-840
OVER BATTLEGROUND AVE.
-LEFT LANE-
DRAWN BY : ATH DATE : 3-12
CHECKED BY : MLO DATE : 3-12
DESIGN ENGINEER OF RECORD: P. KELLY DATE : 5-13
STV / Ralph Whitehead Associates, Inc.
1000 West Morehead St., Ste. 200
Charlotte, NC 28208
NC License No. F-0991
REVISIONS
NO. BY: DATE: NO. BY: DATE:
1 3
2 4
SHEET NO. S-3
TOTAL SHEETS 836
5/30/2013 4:47:32 PM R:\ustation\Finals\(02) Gen Drawing Sheet 2.dgn

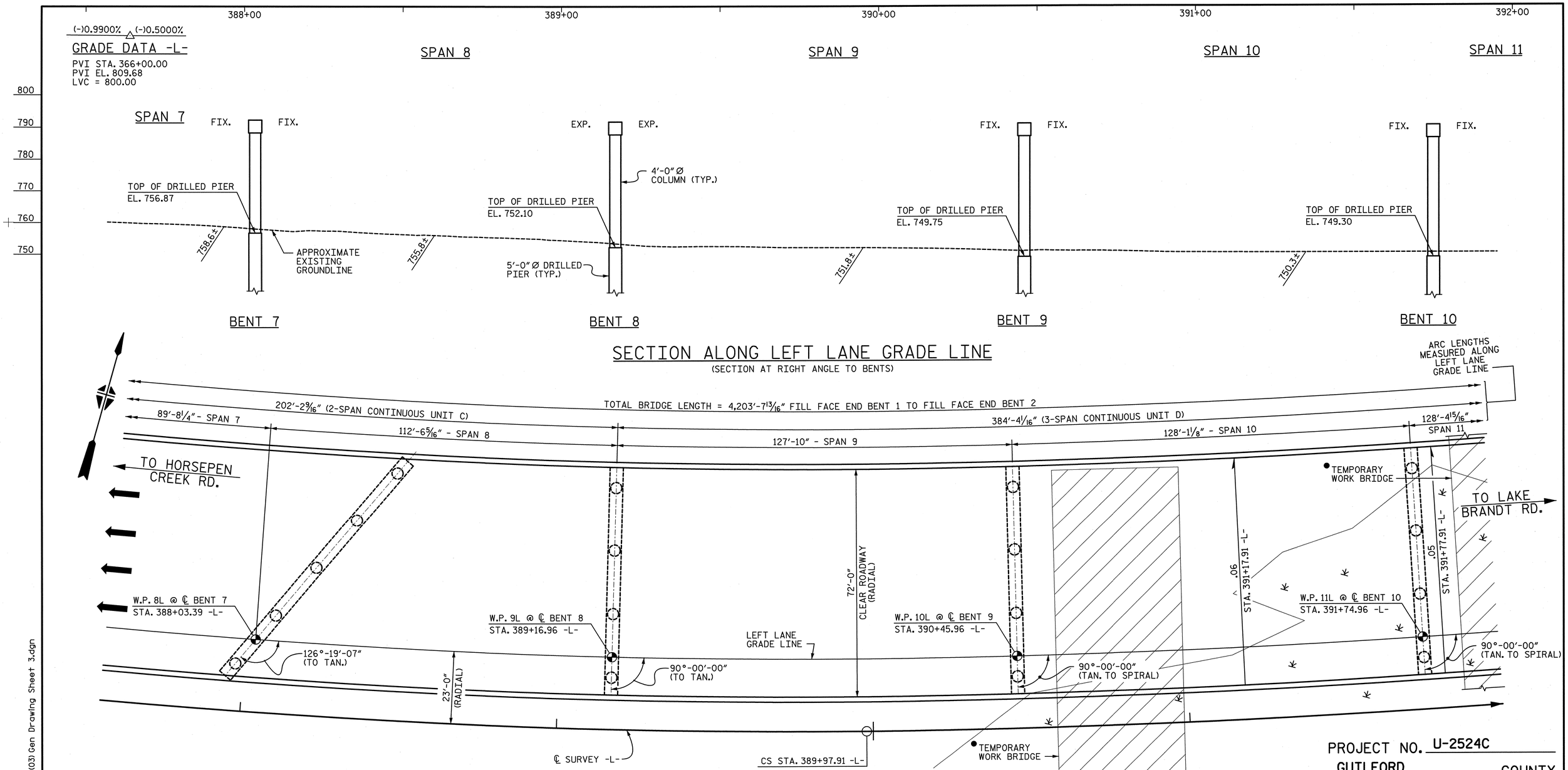

PLAN

● SEE "GENERAL DRAWING TEMPORARY WORK BRIDGE LAYOUT" FOR ADDITIONAL INFORMATION.

HORIZ. CURVE DATA
-L-

PIs = 379+16.55	PI = 385+42.44	PIs = 391+58.05
θs = 5°30'01.4" (LT.)	Δ = 21°07'10.9" (LT.)	θs = 5°30'01.4" (LT.)
Ls = 480.00'	D = 2°17'30.6"	Ls = 480.00'
LT = 320.15'	L = 921.52'	LT = 320.15'
ST = 160.14'	T = 466.05'	ST = 160.14'
	R = 2,500.00'	

PROJECT NO. U-2524C

GUILFORD COUNTY

STATION: POT 407+73.35 -L-
= POT 29+32.06 -Y4-

SHEET 3 OF 10

STATE OF NORTH CAROLINA
DEPARTMENT OF TRANSPORTATION
RALEIGH

GENERAL DRAWING
PLAN AND ELEVATON
BRIDGE ON I-840
OVER BATTLEGROUND AVE.
-LEFT LANE-

NORTH CAROLINA PROFESSIONAL SEAL 18165 ENGINEER MARK F. ROBBINS 5-30-13

NORTH CAROLINA PROFESSIONAL SEAL 28479 ENGINEER KEVIN G. BAILEY 5-30-13

STV / Ralph Whitehead Associates, Inc.
1000 West Morehead St., Ste. 200
Charlotte, NC 28208
NC License No. F-0991

REVISIONS							SHEET NO.
NO.	BY:	DATE:	NO.	BY:	DATE:		S-4
1			3				TOTAL SHEETS
2			4				836

DRAWN BY : ATH	DATE : 3-12	DESIGN ENGINEER OF RECORD: P. KELLY	DATE : 5-13
CHECKED BY : MLO	DATE : 3-12		

5/30/2013 4:47:36 PM R:\ustation\Finals\(03) Gen Drawing Sheet 3.dgn

(-)0.9900% (-)0.5000%

GRADE DATA -L-

PVI STA. 366+00.00
PVI EL. 809.68
LVC = 800.00

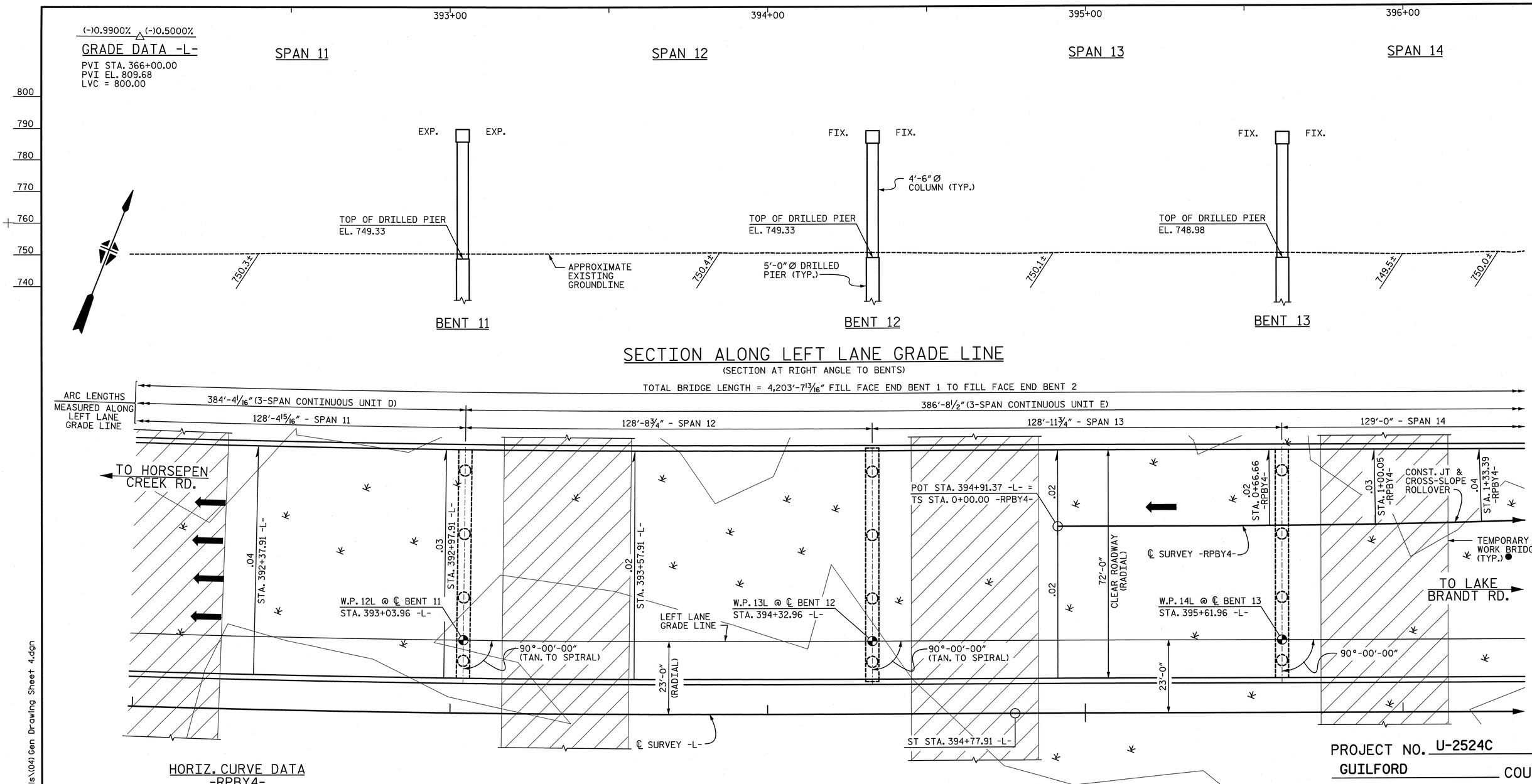

SECTION ALONG LEFT LANE GRADE LINE

(SECTION AT RIGHT ANGLE TO BENTS)

HORIZ. CURVE DATA -RPBY4-

PIs = 1+33.36	PI = 2+53.23	PIs = 3+73.12
θs = 3°22'13.2" (LT.)	Δ = 3°35'13.5" (LT.)	θs = 3°22'13.2" (LT.)
Ls = 200.00'	D = 3°22'13.2"	Ls = 200.00'
LT = 133.36'	L = 106.43'	LT = 133.36'
ST = 66.69'	T = 53.23'	ST = 66.69'
	R = 1,700.00'	

HORIZ. CURVE DATA -L-

PIs = 379+16.55	PI = 385+42.44	PIs = 391+58.05
θs = 5°30'01.4" (LT.)	Δ = 21°07'10.9" (LT.)	θs = 5°30'01.4" (LT.)
Ls = 480.00'	D = 2°17'30.6"	Ls = 480.00'
LT = 320.15'	L = 921.52'	LT = 320.15'
ST = 160.14'	T = 466.05'	ST = 160.14'
	R = 2,500.00'	

PLAN

● SEE "GENERAL DRAWING TEMPORARY WORK BRIDGE LAYOUT" FOR ADDITIONAL INFORMATION.

PROJECT NO. U-2524C
GUILFORD COUNTY
STATION: POT 407+73.35 -L-
= POT 29+32.06 -Y4-

SHEET 4 OF 10

STATE OF NORTH CAROLINA
DEPARTMENT OF TRANSPORTATION
RALEIGH

GENERAL DRAWING
PLAN AND ELEVATION
BRIDGE ON I-840
OVER BATTLEGROUND AVE.
-LEFT LANE-

NORTH CAROLINA PROFESSIONAL SEAL 18165 ENGINEER MARK F. ROBBINS 5-30-13

NORTH CAROLINA PROFESSIONAL SEAL 28479 ENGINEER KEVIN G. BAILEY 5-30-13

STV / Ralph Whitehead Associates, Inc.
1000 West Morehead St., Ste. 200
Charlotte, NC 28208
NC License No. F-0991

REVISIONS								SHEET NO.
NO.	BY:	DATE:	NO.	BY:	DATE:			S-5
1			3					TOTAL SHEETS
2			4					836

DRAWN BY : ATH DATE : 3-12
CHECKED BY : MLO DATE : 3-12

DESIGN ENGINEER OF RECORD: P. KELLY DATE : 5-13

R:\station\Finals\(04) Gen Drawing Sheet 4.dgn 4:47:41PM 5/30/2013

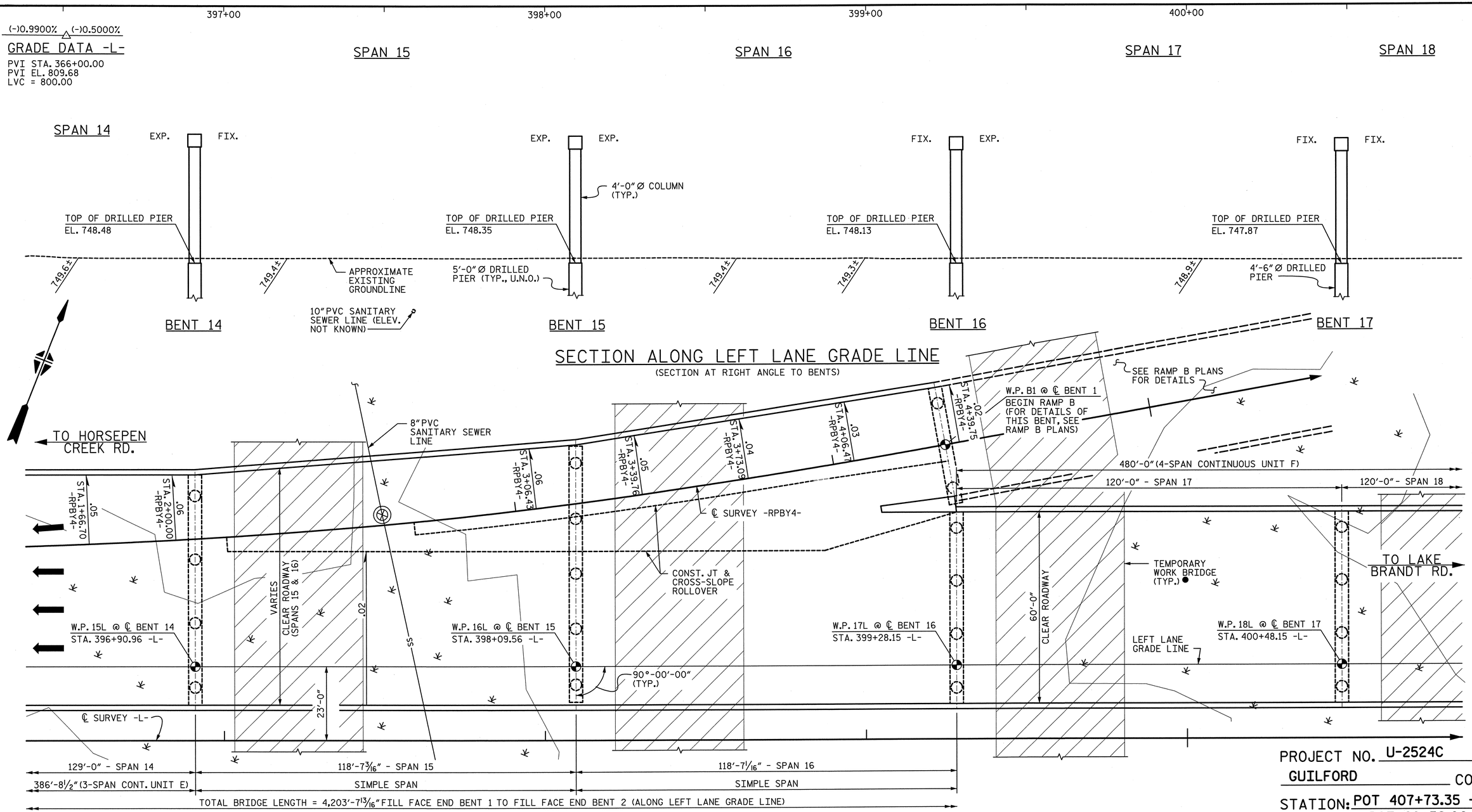

PLAN

● SEE "GENERAL DRAWING TEMPORARY WORK BRIDGE LAYOUT" FOR ADDITIONAL INFORMATION.

HORIZ. CURVE DATA -RPBY4-

PIs = 1+33.36	PI = 2+53.23	PIs = 3+73.12
Θs = 3°22'13.2" (LT.)	Δ = 3°35'13.5" (LT.)	Θs = 3°22'13.2" (LT.)
Ls = 200.00'	D = 3°22'13.2"	Ls = 200.00'
LT = 133.36'	L = 106.43'	LT = 133.36'
ST = 66.69'	T = 53.23'	ST = 66.69'
	R = 1,700.00'	

GRADE DATA -RPBY4-

(-)0.5000% (-)0.5200% (-)0.5400% (-)0.9800% (-)0.8148% (-)4.4042%

PVI STA. 0+50.00	PVI STA. 1+50.00	PVI STA. 2+00.00	PVI STA. 2+50.00	PVI STA. 5+20.00
PVI EL. 794.25	PVI EL. 793.73	PVI EL. 793.46	PVI EL. 792.97	PVI EL. 790.77
				LVC = 540.00

PROJECT NO. U-2524C

GUILFORD COUNTY

STATION: POT 407+73.35 -L-
= POT 29+32.06 -Y4-

SHEET 5 OF 10

STATE OF NORTH CAROLINA
DEPARTMENT OF TRANSPORTATION
RALEIGH

GENERAL DRAWING PLAN AND ELEVATON BRIDGE ON I-840 OVER BATTLEGROUND AVE. -LEFT LANE-

NORTH CAROLINA PROFESSIONAL ENGINEER SEAL 18165 ENGINEER MARK F. ROBBINS 5-30-13

NORTH CAROLINA PROFESSIONAL ENGINEER SEAL 28479 ENGINEER KEVIN G. BAILEY 5-30-13

STV / Ralph Whitehead Associates, Inc.
1000 West Morehead St., Ste. 200
Charlotte, NC 28208
NC License No. F-0991

REVISIONS							
NO.	BY:	DATE:	NO.	BY:	DATE:	SHEET NO.	S-6
1			3			TOTAL SHEETS	836
2			4				

DRAWN BY : ATH	DATE : 3-12	DESIGN ENGINEER OF RECORD: P. KELLY	DATE : 5-13
CHECKED BY : MLO	DATE : 3-12		

R:\station\Finals\(05) Gen Drawing Sheet 5.dgn 6:03:26 PM 5/30/2013

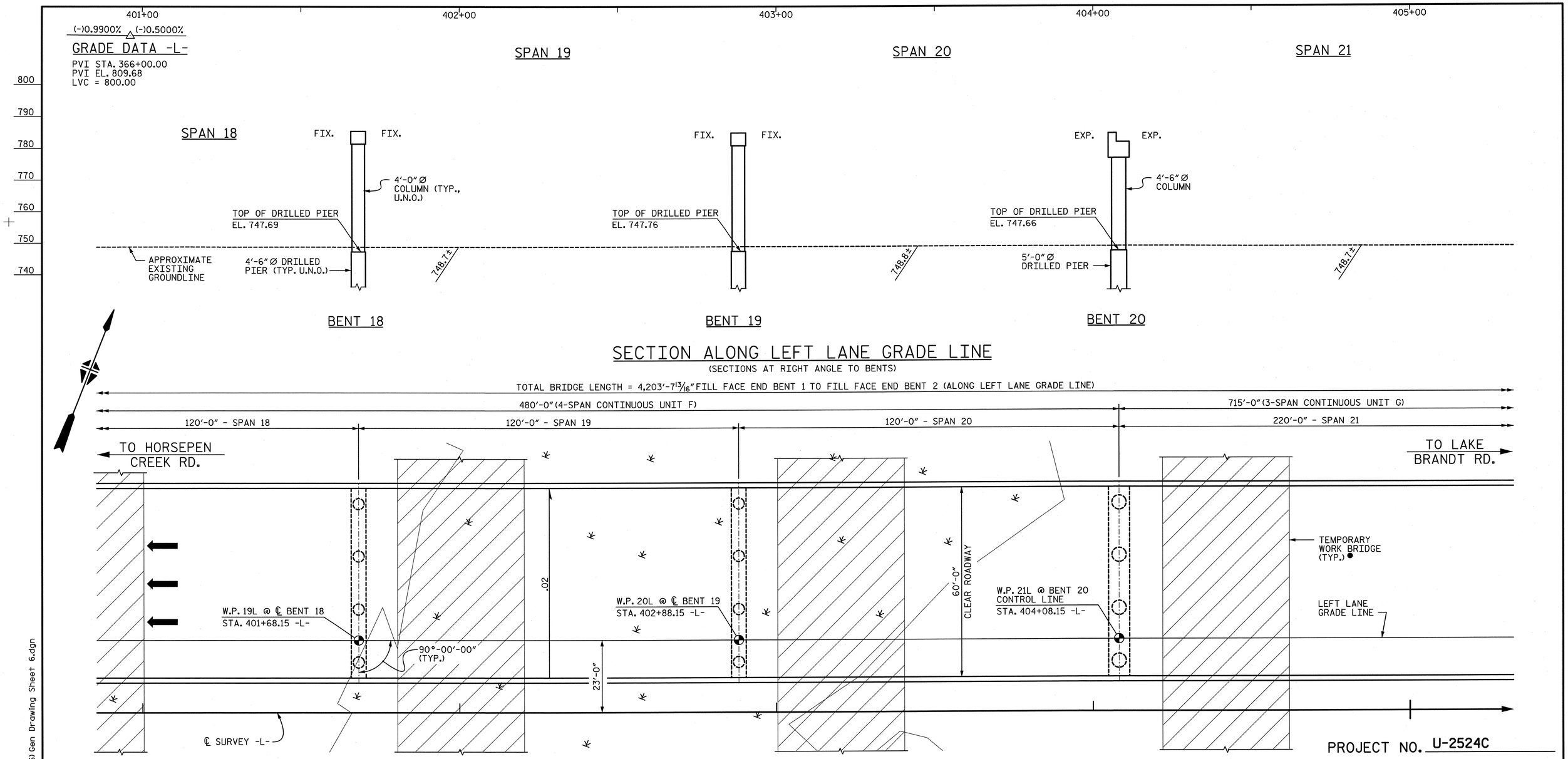

PLAN

● SEE "GENERAL DRAWING TEMPORARY WORK BRIDGE LAYOUT" FOR ADDITIONAL INFORMATION.

PROJECT NO. U-2524C

GUILFORD COUNTY

STATION: POT 407+73.35 -L-
= POT 29+32.06 -Y4-

SHEET 6 OF 10

STATE OF NORTH CAROLINA
DEPARTMENT OF TRANSPORTATION
RALEIGH

GENERAL DRAWING
PLAN AND ELEVATION
BRIDGE ON I-840
OVER BATTLEGROUND AVE.
-LEFT LANE-

NORTH CAROLINA PROFESSIONAL SEAL 18165 ENGINEER MARK F. ROBBINS 5-30-13

NORTH CAROLINA PROFESSIONAL SEAL 28479 ENGINEER KEVIN G. BAILEY 5-30-13

STV / Ralph Whitehead Associates, Inc.
1000 West Morehead St., Ste. 200
Charlotte, NC 28208
NC License No. F-0991

REVISIONS							
NO.	BY:	DATE:	NO.	BY:	DATE:		
1			3				
2			4				

SHEET NO. S-7

TOTAL SHEETS 836

DRAWN BY : ATH DATE : 3-12
CHECKED BY : MLO DATE : 3-12

DESIGN ENGINEER OF RECORD: P. KELLY DATE : 5-13

5/30/2013 4:47:51 PM R:\ustation\Finals\(06) Gen Drawing Sheet 6.dgn

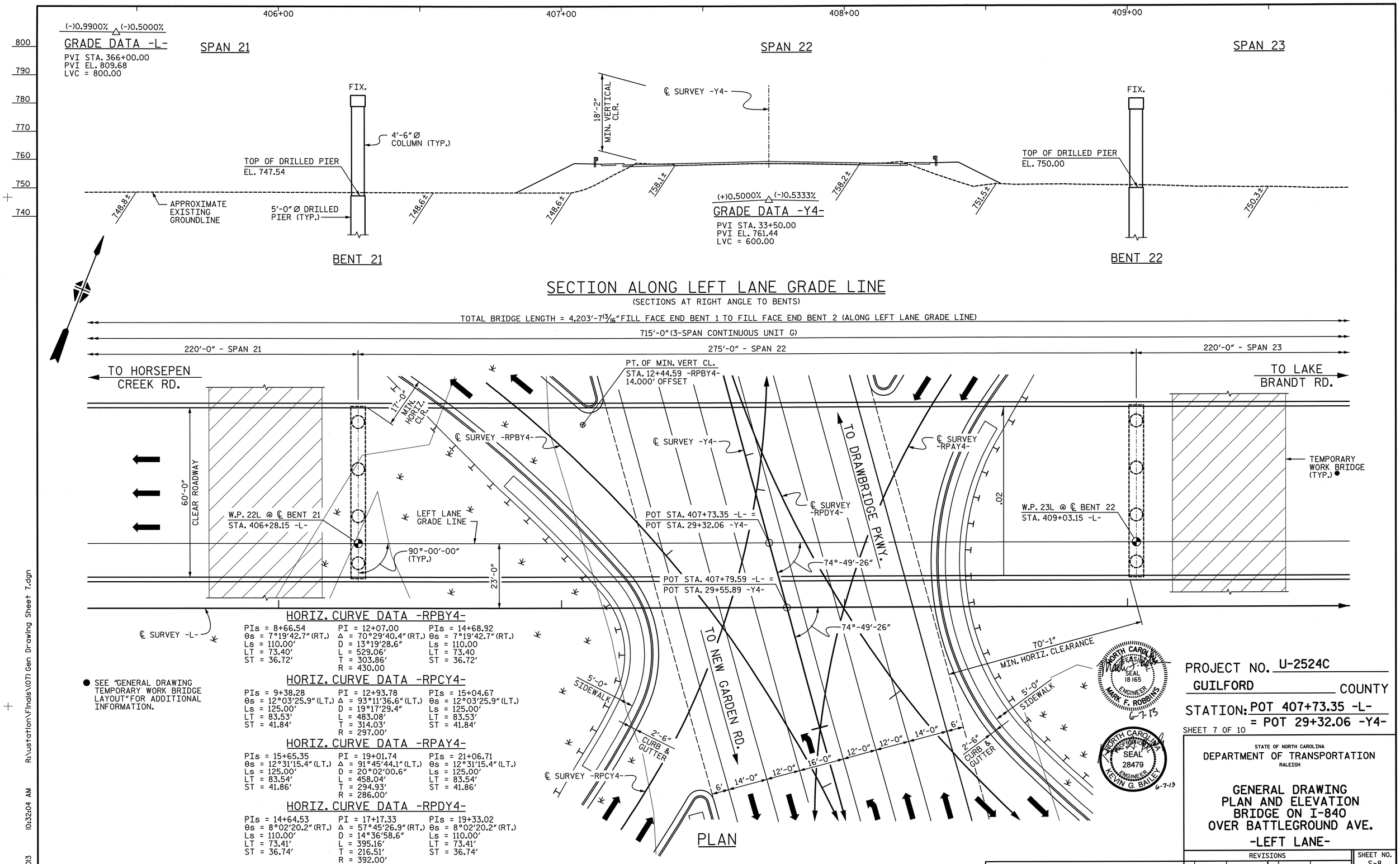

● SEE "GENERAL DRAWING TEMPORARY WORK BRIDGE LAYOUT" FOR ADDITIONAL INFORMATION.

HORIZ. CURVE DATA -RPBY4-

PIs = 8+66.54	PI = 12+07.00	PIs = 14+68.92
θs = 7°19'42.7" (RT.)	Δ = 70°29'40.4" (RT.)	θs = 7°19'42.7" (RT.)
Ls = 110.00'	D = 13°19'28.6"	Ls = 110.00
LT = 73.40'	L = 529.06'	LT = 73.40
ST = 36.72'	T = 303.86'	ST = 36.72'
	R = 430.00	

HORIZ. CURVE DATA -RPCY4-

PIs = 9+38.28	PI = 12+93.78	PIs = 15+04.67
θs = 12°03'25.9" (LT.)	Δ = 93°11'36.6" (LT.)	θs = 12°03'25.9" (LT.)
Ls = 125.00'	D = 19°17'29.4"	Ls = 125.00'
LT = 83.53'	L = 483.08'	LT = 83.53'
ST = 41.84'	T = 314.03'	ST = 41.84'
	R = 297.00'	

HORIZ. CURVE DATA -RPAY4-

PIs = 15+65.35	PI = 19+01.74	PIs = 21+06.71
θs = 12°31'15.4" (LT.)	Δ = 91°45'44.1" (LT.)	θs = 12°31'15.4" (LT.)
Ls = 125.00'	D = 20°02'00.6"	Ls = 125.00'
LT = 83.54'	L = 458.04'	LT = 83.54'
ST = 41.86'	T = 294.93'	ST = 41.86'
	R = 286.00'	

HORIZ. CURVE DATA -RPDY4-

PIs = 14+64.53	PI = 17+17.33	PIs = 19+33.02
θs = 8°02'20.2" (RT.)	Δ = 57°45'26.9" (RT.)	θs = 8°02'20.2" (RT.)
Ls = 110.00'	D = 14°36'58.6"	Ls = 110.00'
LT = 73.41'	L = 395.16'	LT = 73.41'
ST = 36.74'	T = 216.51'	ST = 36.74'
	R = 392.00'	

PROJECT NO. U-2524C

GUILFORD COUNTY

STATION: POT 407+73.35 -L-
= POT 29+32.06 -Y4-

SHEET 7 OF 10

STATE OF NORTH CAROLINA
DEPARTMENT OF TRANSPORTATION
RALEIGH

GENERAL DRAWING
PLAN AND ELEVATION
BRIDGE ON I-840
OVER BATTLEGROUND AVE.
-LEFT LANE-

REVISIONS						SHEET NO.
NO.	BY:	DATE:	NO.	BY:	DATE:	S-8
1			3			TOTAL SHEETS
2			4			836

STV / Ralph Whitehead Associates, Inc.
1000 West Morehead St., Ste. 200
Charlotte, NC 28208
NC License No. F-0991

DRAWN BY : ATH DATE : 3-12
CHECKED BY : MLO DATE : 3-12
DESIGN ENGINEER OF RECORD: P. KELLY DATE : 5-13

6/7/2013 10:32:04 AM R:\ustation\Finals\107\Gen Drawing Sheet 7.dgn

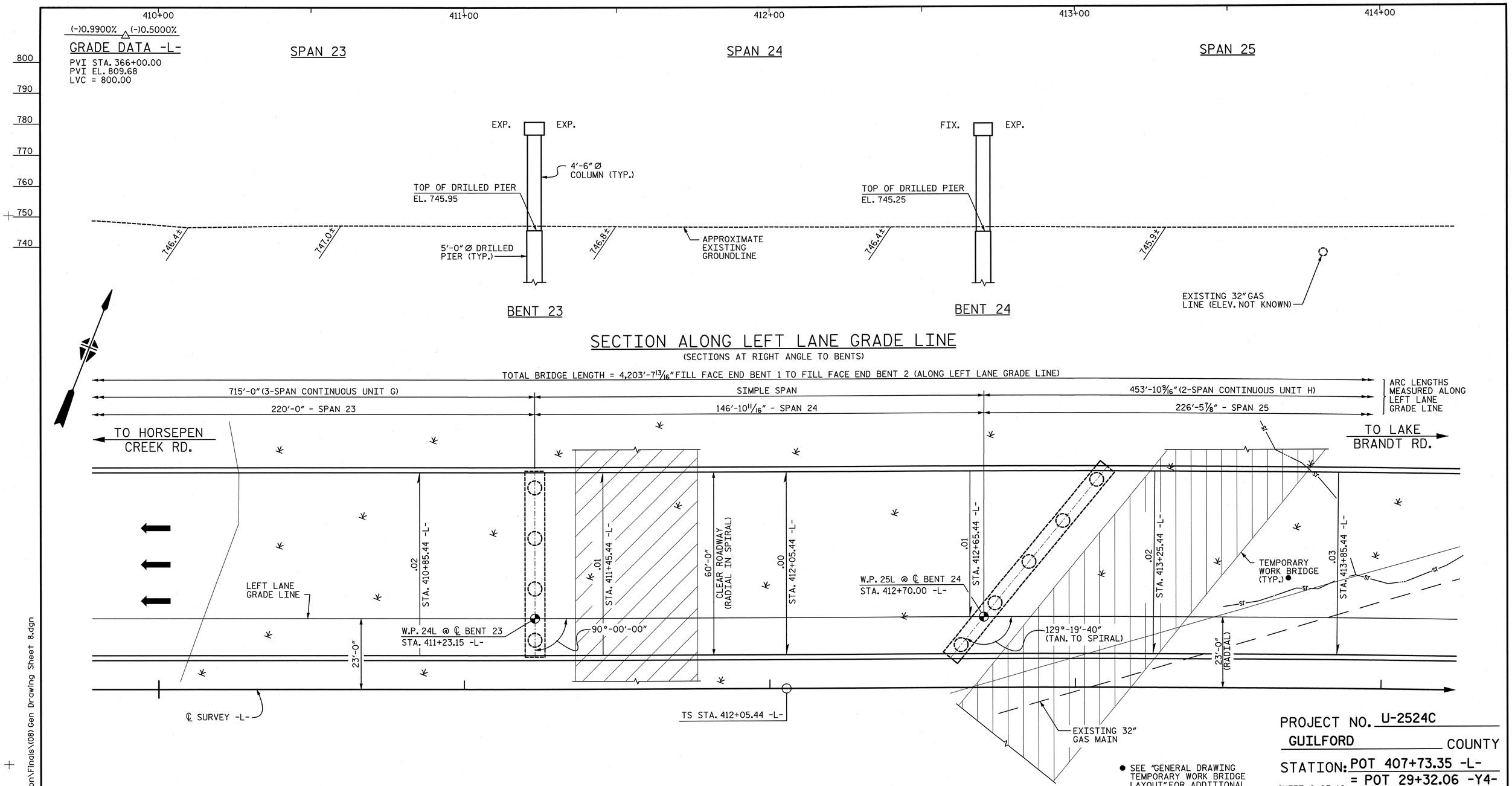

HORIZ. CURVE DATA
-L-

PIs = 415+25.60	PI = 421+58.62	PIs = 427+80.87
θs = 5°30'01.4" (RT.)	Δ = 21°26'06.8" (RT.)	θs = 5°30'01.4" (RT.)
Ls = 480.00'	D = 2°17'30.6"	Ls = 480.00'
LT = 320.15'	L = 935.29'	LT = 320.15'
ST = 160.14'	T = 473.18'	ST = 160.14'
	R = 2,500.00'	

PROJECT NO. U-2524C
GUILFORD COUNTY
STATION: POT 407+73.35 -L-
= POT 29+32.06 -Y4-

SHEET 8 OF 10

STATE OF NORTH CAROLINA
DEPARTMENT OF TRANSPORTATION
RALEIGH

GENERAL DRAWING
PLAN AND ELEVATION
BRIDGE ON I-840
OVER BATTLEGROUND AVE.
-LEFT LANE-

NORTH CAROLINA PROFESSIONAL SEAL 18165 ENGINEER MARK F. ROBBINS 5-30-13

NORTH CAROLINA PROFESSIONAL SEAL 28479 ENGINEER KEVIN G. BAILEY 5-30-13

STV / Ralph Whitehead Associates, Inc.
1000 West Morehead St., Ste. 200
Charlotte, NC 28208
NC License No. F-0991

REVISIONS								
NO.	BY:	DATE:	NO.	BY:	DATE:		SHEET NO. S-9
1			3				TOTAL SHEETS 836
2			4				

DRAWN BY : ATH	DATE : 3-12	DESIGN ENGINEER OF RECORD: P. KELLY	DATE : 5-13
CHECKED BY : MLO	DATE : 3-12		

5/30/2013 4:48:00 PM R:\station\Finals\(08) Gen Drawing Sheet 8.dgn

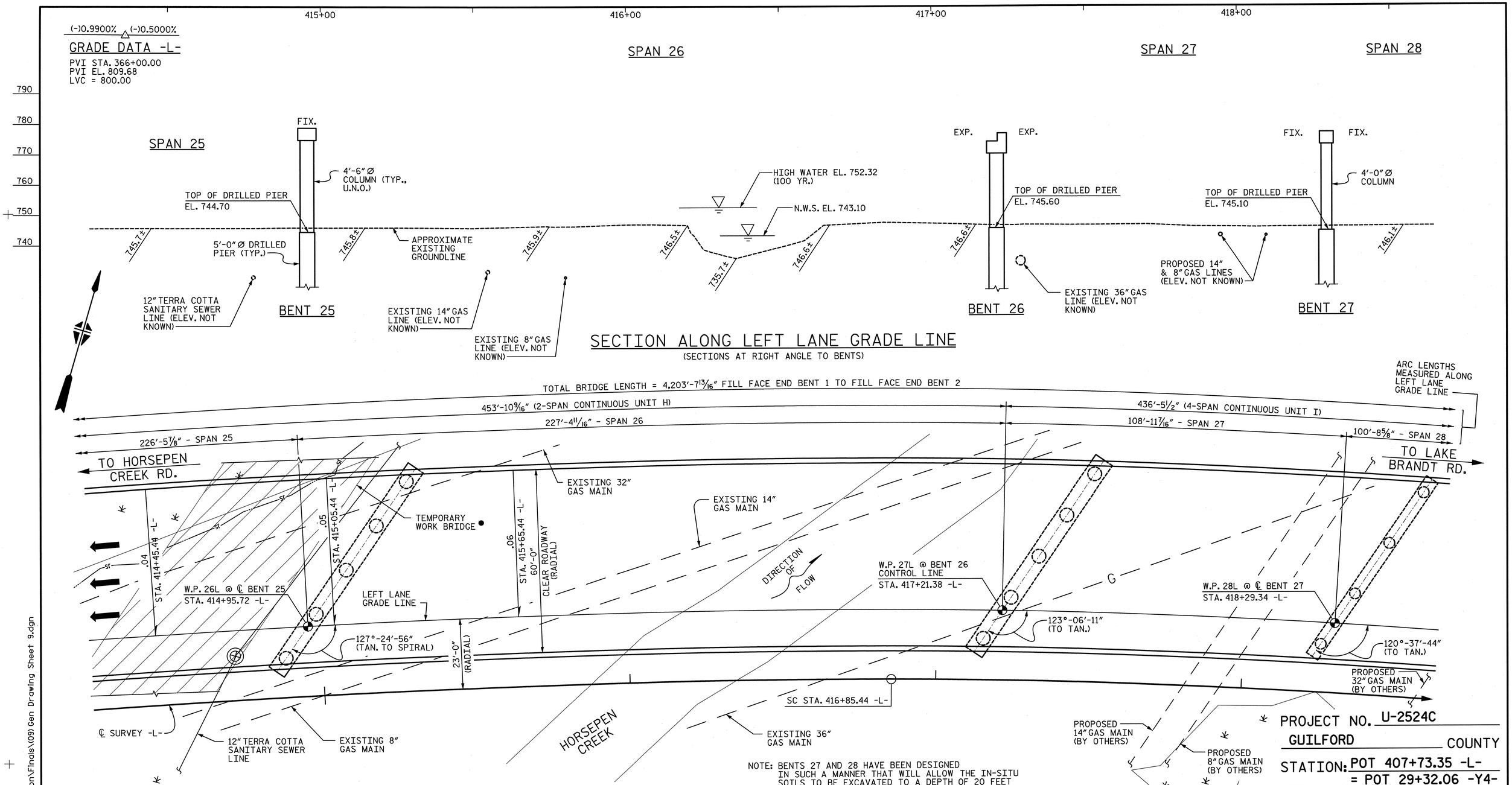

NOTE: BENTS 27 AND 28 HAVE BEEN DESIGNED IN SUCH A MANNER THAT WILL ALLOW THE IN-SITU SOILS TO BE EXCAVATED TO A DEPTH OF 20 FEET BELOW THE EXISTING GROUND SURFACE (APPROX. EL. 747.0) ACROSS THE ENTIRE WIDTH AND ALONG THE ENTIRE LENGTH OF COLONIAL PIPELINE COMPANY'S EASEMENT WITHOUT CAUSING ANY NEGATIVE IMPACTS TO THE STRENGTH, STABILITY OR SERVICEABILITY OF THE BRIDGE OR ITS FOUNDATIONS.

● SEE "GENERAL DRAWING TEMPORARY WORK BRIDGE" FOR ADDITIONAL INFORMATION

HORIZ. CURVE DATA
-L-

PIs = 415+25.60	PI = 421+58.62	PIs = 427+80.87
θs = 5°30'01.4" (RT.)	Δ = 21°26'06.8" (RT.)	θs = 5°30'01.4" (RT.)
Ls = 480.00'	D = 2°17'30.6"	Ls = 480.00'
LT = 320.15'	L = 935.29'	LT = 320.15'
ST = 160.14'	T = 473.18'	ST = 160.14'
	R = 2,500.00'	

HYDRAULIC DATA

DESIGN DISCHARGE = 6,223 CFS
FREQUENCY OF DESIGN FLOOD = 50 YRS.
DESIGN HIGH WATER ELEVATION = 751.60 FT.
DRAINAGE AREA = 16.3 SQ. MI.
BASIC DISCHARGE (Q100) = 7,302 CFS
BASIC HIGH WATER ELEVATION = 752.32 FT.

OVERTOPPING FLOOD DATA

OVERTOPPING DISCHARGE = NA CFS
FREQUENCY OF OVERTOPPING FLOOD = 500 YRS.
OVERTOPPING FLOOD ELEVATION = NA FT.

PROJECT NO. U-2524C
GUILFORD COUNTY
STATION: POT 407+73.35 -L-
= POT 29+32.06 -Y4-

SHEET 9 OF 10

STATE OF NORTH CAROLINA
DEPARTMENT OF TRANSPORTATION
RALEIGH

GENERAL DRAWING PLAN AND ELEVATION BRIDGE ON I-840 OVER BATTLEGROUND AVE. -LEFT LANE-

NORTH CAROLINA PROFESSIONAL SEAL 18165 ENGINEER MARK F. ROBBINS 6-7-13

NORTH CAROLINA PROFESSIONAL SEAL 28479 ENGINEER KEVIN G. BAILEY 6-7-13

STV / Ralph Whitehead Associates, Inc.
1000 West Morehead St., Ste. 200
Charlotte, NC 28208
NC License No. F-0991

REVISIONS							SHEET NO.
NO.	BY:	DATE:	NO.	BY:	DATE:		S-10
1			3				TOTAL SHEETS
2			4				836

DRAWN BY : ATH	DATE : 3-12	DESIGN ENGINEER OF RECORD: P. KELLY	DATE : 5-13
CHECKED BY : MLO	DATE : 3-12		

6/7/2013 10:32:08 AM R:\ustration\Finals\(09) Gen Drawing Sheet 9.dgn

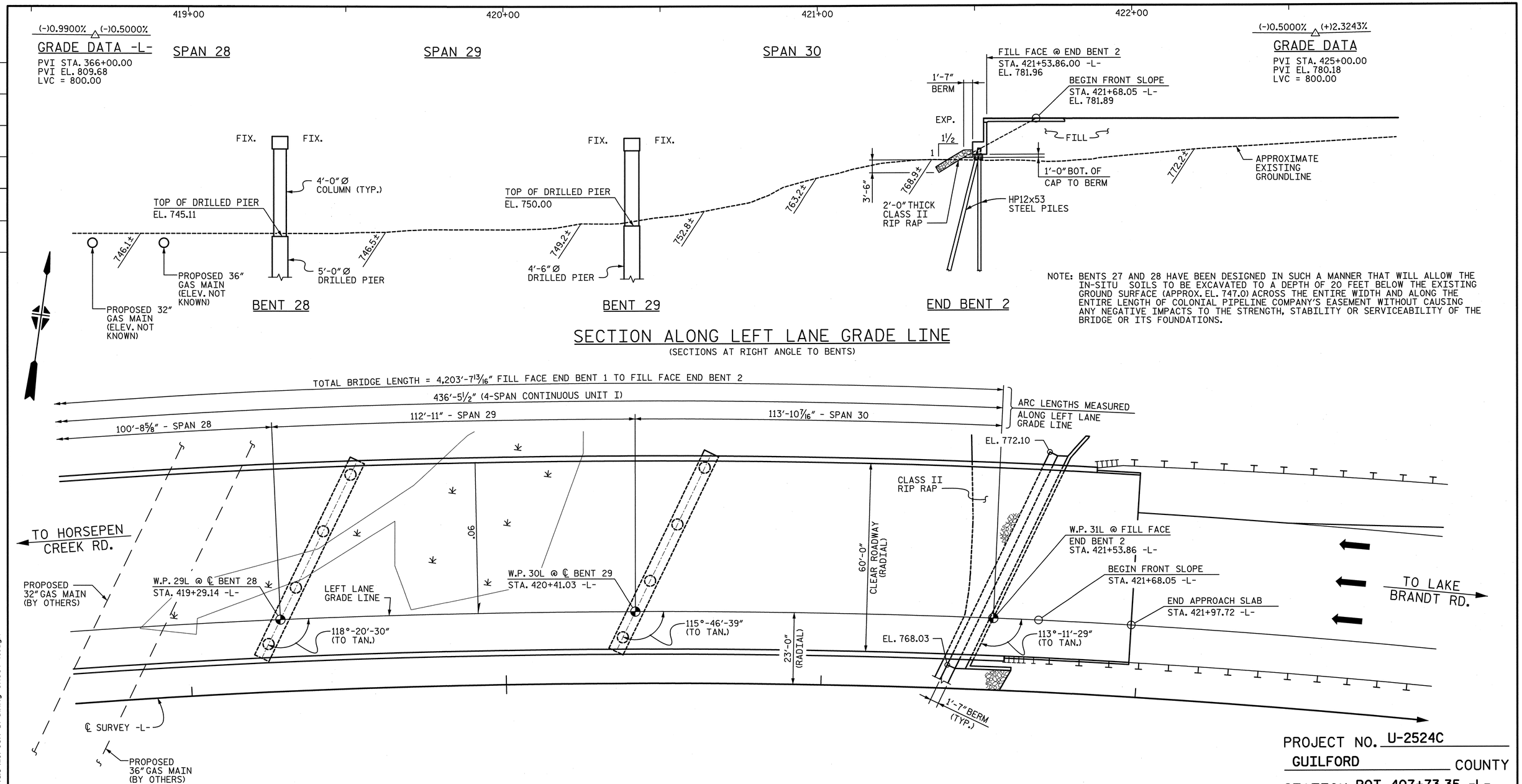

NOTE: BENTS 27 AND 28 HAVE BEEN DESIGNED IN SUCH A MANNER THAT WILL ALLOW THE IN-SITU SOILS TO BE EXCAVATED TO A DEPTH OF 20 FEET BELOW THE EXISTING GROUND SURFACE (APPROX. EL. 747.0) ACROSS THE ENTIRE WIDTH AND ALONG THE ENTIRE LENGTH OF COLONIAL PIPELINE COMPANY'S EASEMENT WITHOUT CAUSING ANY NEGATIVE IMPACTS TO THE STRENGTH, STABILITY OR SERVICEABILITY OF THE BRIDGE OR ITS FOUNDATIONS.

SECTION ALONG LEFT LANE GRADE LINE

(SECTIONS AT RIGHT ANGLE TO BENTS)

PLAN

(PILES NOT SHOWN FOR CLARITY)

HORIZ. CURVE DATA -L-

PIs = 415+25.60	PI = 421+58.62	PIs = 427+80.87
θs = 5°30'01.4" (RT.)	Δ = 21°26'06.8" (RT.)	θs = 5°30'01.4" (RT.)
Ls = 480.00'	D = 2°17'30.6"	Ls = 480.00'
LT = 320.15'	L = 935.29'	LT = 320.15'
ST = 160.14'	T = 473.18'	ST = 160.14'
	R = 2,500.00'	

PROJECT NO. U-2524C

GUILFORD COUNTY

STATION: POT 407+73.35 -L-
= POT 29+32.06 -Y4-

SHEET 10 OF 10

STATE OF NORTH CAROLINA
DEPARTMENT OF TRANSPORTATION
RALEIGH

GENERAL DRAWING PLAN AND ELEVATION BRIDGE ON I-840 OVER BATTLEGROUND AVE.

-LEFT LANE-

NORTH CAROLINA PROFESSIONAL SEAL 18165 ENGINEER MARK F. ROBBINS 6-7-13

NORTH CAROLINA PROFESSIONAL SEAL 28479 ENGINEER KEVIN G. BAILEY 6-7-13

STV / Ralph Whitehead Associates, Inc.
1000 West Morehead St., Ste. 200
Charlotte, NC 28208
NC License No. F-0991

REVISIONS								SHEET NO.
NO.	BY:	DATE:	NO.	BY:	DATE:			S-11
1			3					TOTAL SHEETS
2			4					836

DRAWN BY : ATH	DATE : 3-12	DESIGN ENGINEER OF RECORD: P. KELLY	DATE : 5-13
CHECKED BY : MLO	DATE : 3-12		

6/7/2013 10:32:13 AM R:\ustation\Finals\(10) Gen Drawing Sheet 10.dgn

NOTES:

1. FOR FOUNDATION NOTES, SEE "GENERAL DRAWING GENERAL NOTES" SHEET.

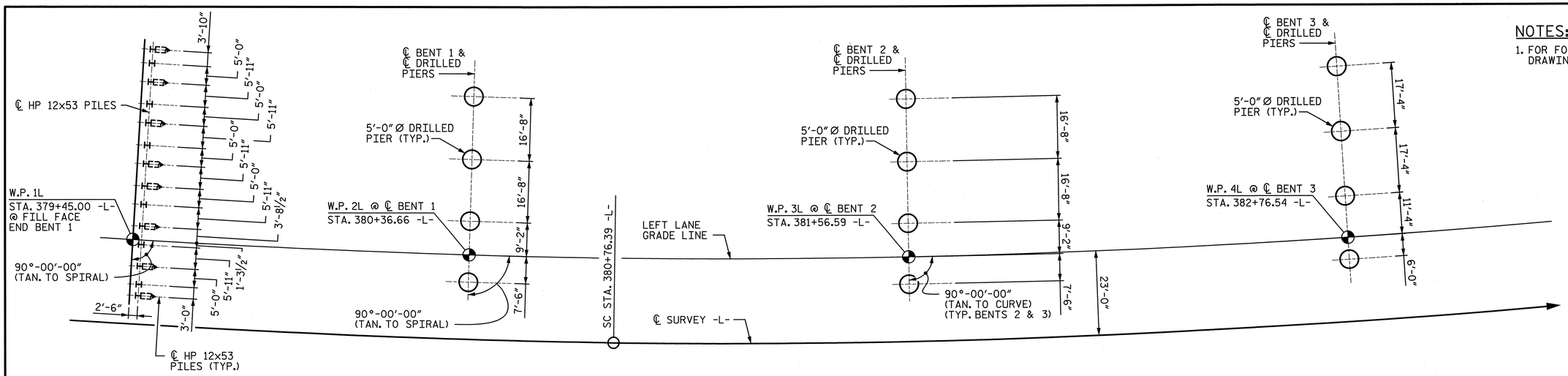

END BENT 1 — DENOTES DIRECTION OF 3:12 PILE BATTER. — BENT 1 — BENT 2 — BENT 3

FOUNDATION LAYOUT

(DIMENSIONS TO DRILLED PIERS ARE TO ℄ OF DRILLED PIERS AND ALONG ℄ BENT OR BENT CONTROL LINE)
(DIMENSIONS TO HP 12x53 PILES ARE TO ℄ HP 12x53 PILES)

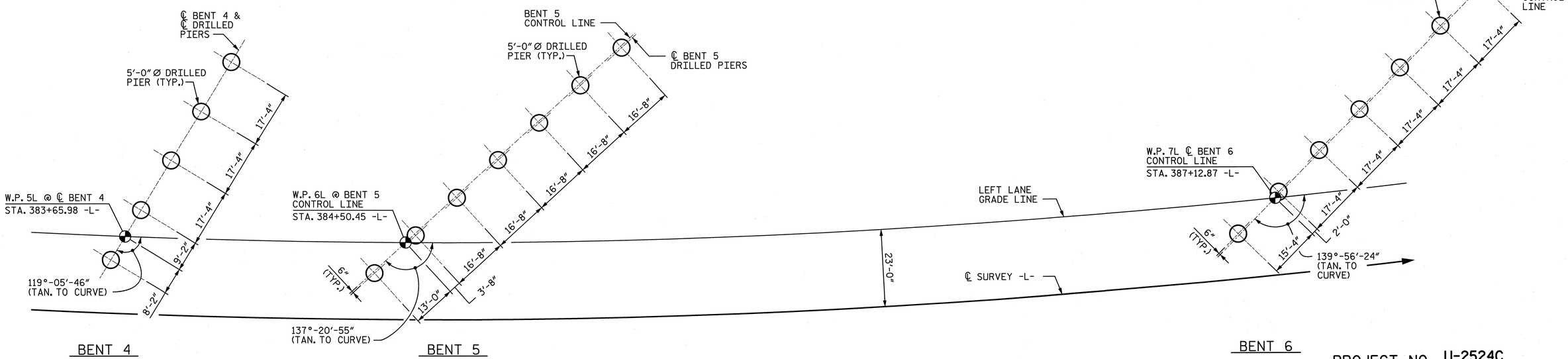

BENT 4 — BENT 5 — BENT 6

FOUNDATION LAYOUT

(DIMENSIONS TO DRILLED PIERS ARE TO ℄ OF DRILLED PIERS AND ALONG ℄ BENT OR BENT CONTROL LINE)

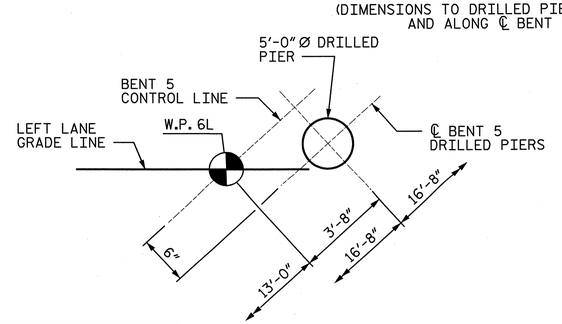

WORKPOINT 6L DETAIL
(N.T.S.)

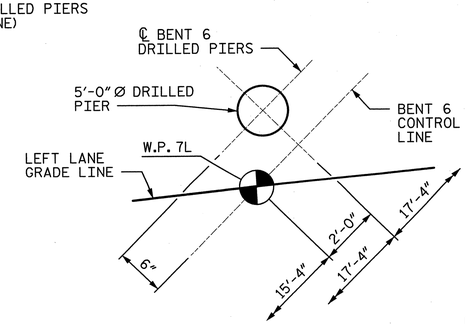

WORKPOINT 7L DETAIL
(N.T.S.)

PROJECT NO. U-2524C
GUILFORD COUNTY
STATION: POT 407+73.35 -L-
= POT 29+32.06 -Y4-

SHEET 1 OF 5

STATE OF NORTH CAROLINA
DEPARTMENT OF TRANSPORTATION
RALEIGH

GENERAL DRAWING
FOUNDATION LAYOUT
BRIDGE ON I-840
OVER BATTLEGROUND AVE.
-LEFT LANE-

NORTH CAROLINA PROFESSIONAL SEAL 18165 ENGINEER MARK F. ROBBINS 5-30-13

NORTH CAROLINA PROFESSIONAL SEAL 28479 ENGINEER KEVIN G. BAILEY 5-30-13

STV / Ralph Whitehead Associates, Inc.
1000 West Morehead St., Ste. 200
Charlotte, NC 28208
NC License No. F-0991

REVISIONS								SHEET NO.
NO.	BY:	DATE:	NO.	BY:	DATE:			S-12
1			3					TOTAL SHEETS
2			4					836

DRAWN BY : CLG	DATE : 12-12	DESIGN ENGINEER OF RECORD: K. BAILEY	DATE : 5-13
CHECKED BY : TRL	DATE : 4-13		

5/30/2013 4:48:12 PM R:\ustation\Finals\FDN Layout 1of 5.dgn

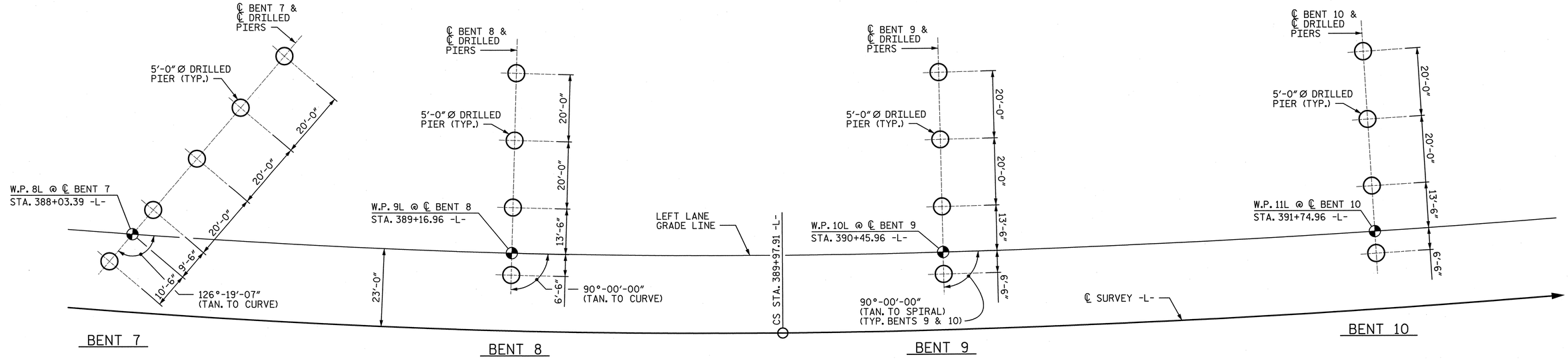

FOUNDATION LAYOUT

(DIMENSIONS TO DRILLED PIERS ARE TO ℄ DRILLED PIERS AND ALONG ℄ BENT OR BENT CONTROL LINE)

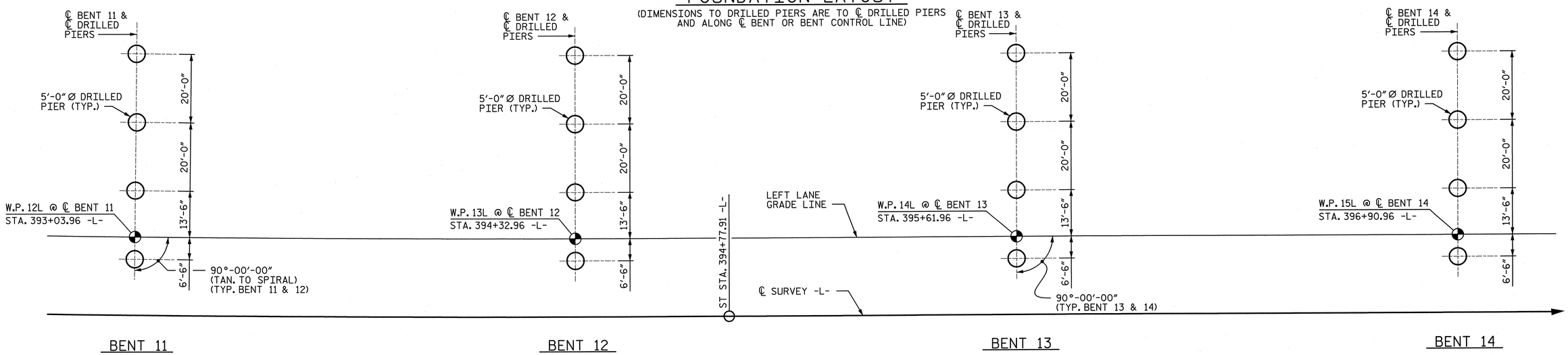

FOUNDATION LAYOUT

(DIMENSIONS TO DRILLED PIERS ARE TO ℄ DRILLED PIERS AND ALONG ℄ BENT OR BENT CONTROL LINE)

PROJECT NO. U-2524C

GUILFORD COUNTY

STATION: POT 407+73.35 -L-
= POT 29+32.06 -Y4-

SHEET 2 OF 5

STATE OF NORTH CAROLINA
DEPARTMENT OF TRANSPORTATION
RALEIGH

GENERAL DRAWING
FOUNDATION LAYOUT
BRIDGE ON I-840
OVER BATTLEGROUND AVE.
-LEFT LANE-

NORTH CAROLINA PROFESSIONAL ENGINEER SEAL 18165 MARK F. ROBBINS 5-30-13

NORTH CAROLINA PROFESSIONAL ENGINEER SEAL 28479 KEVIN G. BAILEY 5-30-13

STV / Ralph Whitehead Associates, Inc.
1000 West Morehead St., Ste. 200
Charlotte, NC 28208
NC License No. F-0991

REVISIONS								SHEET NO.
NO.	BY:	DATE:	NO.	BY:	DATE:			S-13
1			3					TOTAL SHEETS
2			4					83

DRAWN BY : CLG	DATE : 12-12	DESIGN ENGINEER OF RECORD: K. BAILEY	DATE : 5-13
CHECKED BY : TRL	DATE : 4-13		

5/30/2013 6:12:07 PM R:\ustation\Finals\FDN Layout 2 of 5.dgn

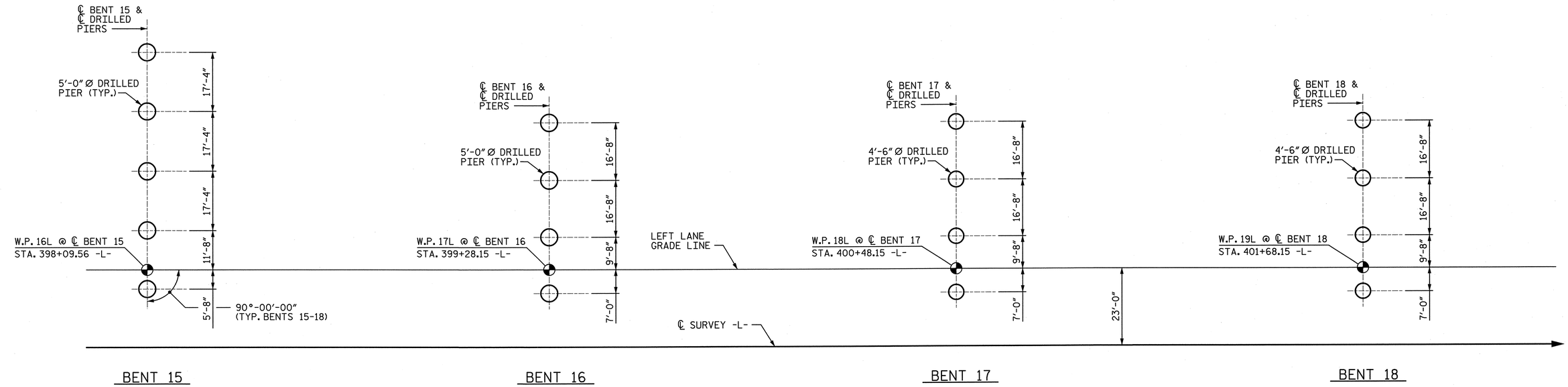

FOUNDATION LAYOUT

(DIMENSIONS TO DRILLED PIERS ARE TO ℄ DRILLED PIERS
AND ALONG ℄ BENT OR BENT CONTROL LINE)

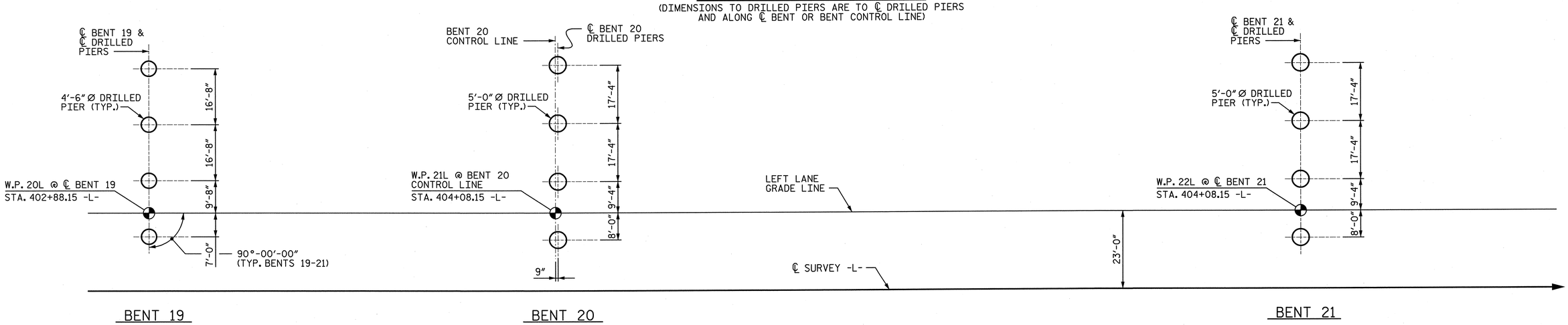

FOUNDATION LAYOUT

(DIMENSIONS TO DRILLED PIERS ARE TO ℄ DRILLED PIERS
AND ALONG ℄ BENT OR BENT CONTROL LINE)

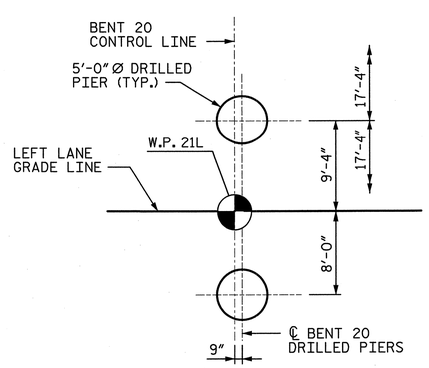

WORKPOINT 21L DETAIL

(N.T.S.)

PROJECT NO. U-2524C

GUILFORD COUNTY

STATION: POT 407+73.35 -L-
= POT 29+32.06 -Y4-

SHEET 3 OF 5

STATE OF NORTH CAROLINA
DEPARTMENT OF TRANSPORTATION
RALEIGH

GENERAL DRAWING
FOUNDATION LAYOUT
BRIDGE ON I-840
OVER BATTLEGROUND AVE.
-LEFT LANE-

NORTH CAROLINA PROFESSIONAL SEAL 18165 ENGINEER MARK F. ROBBINS 5-30-13

NORTH CAROLINA PROFESSIONAL SEAL 28479 ENGINEER KEVIN G. BAILEY 5-30-13

STV / Ralph Whitehead Associates, Inc.
1000 West Morehead St., Ste. 200
Charlotte, NC 28208
NC License No. F-0991

REVISIONS								SHEET NO.
NO.	BY:	DATE:	NO.	BY:	DATE:			S-14
1			3					TOTAL SHEETS
2			4					836

DRAWN BY : CLG	DATE : 12-12	DESIGN ENGINEER OF RECORD: K. BAILEY	DATE : 5-13
CHECKED BY : TRL	DATE : 4-13		

5/30/2013 4:48:23 PM R:\ustation\Finals\FDN Layout 3 of 5.dgn

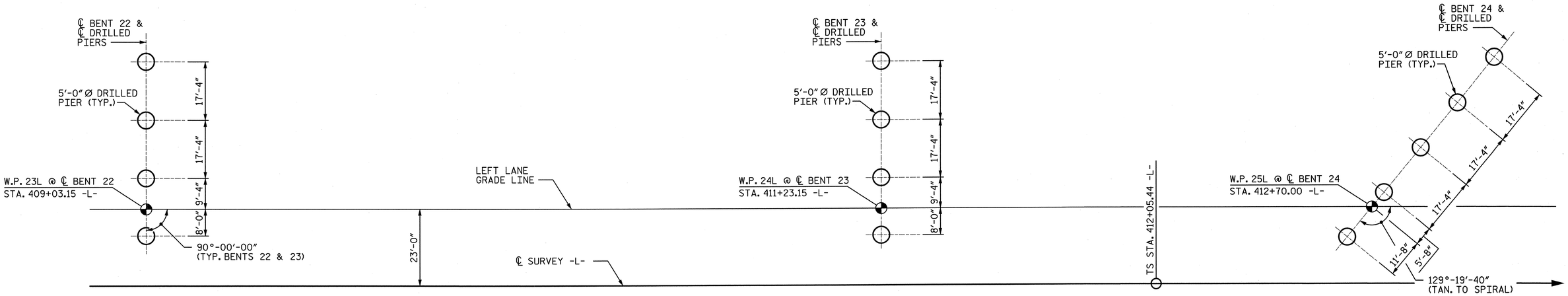

BENT 22

BENT 23

BENT 24

FOUNDATION LAYOUT

(DIMENSIONS TO DRILLED PIERS ARE TO ℄ DRILLED PIERS AND ALONG ℄ BENT OR BENT CONTROL LINE)

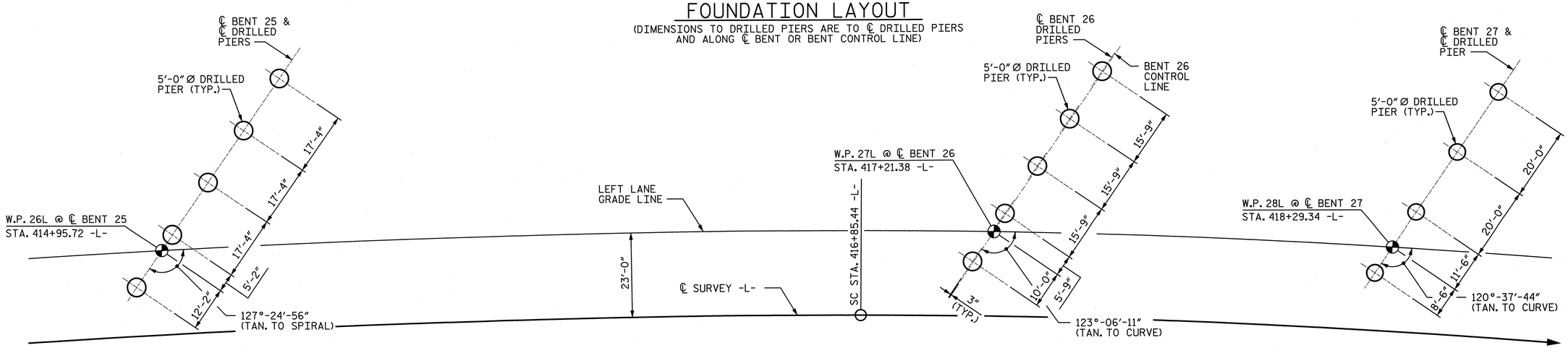

BENT 25

BENT 26

BENT 27

FOUNDATION LAYOUT

(DIMENSIONS TO DRILLED PIERS ARE TO ℄ DRILLED PIERS AND ALONG ℄ BENT OR BENT CONTROL LINE)

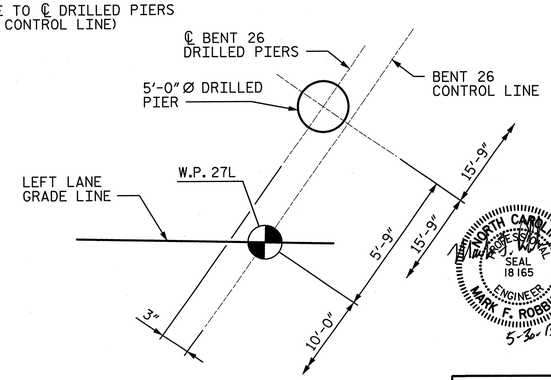

WORKPOINT 27L DETAIL

(N.T.S.)

PROJECT NO. U-2524C

GUILFORD COUNTY

STATION: POT 407+73.35 -L-
= POT 29+32.06 -Y4-

SHEET 4 OF 5

STATE OF NORTH CAROLINA
DEPARTMENT OF TRANSPORTATION
RALEIGH

GENERAL DRAWING
FOUNDATION LAYOUT
BRIDGE ON I-840
OVER BATTLEGROUND AVE.
-LEFT LANE-

NORTH CAROLINA PROFESSIONAL SEAL 18165 ENGINEER MARK F. ROBBINS 5-30-13

NORTH CAROLINA PROFESSIONAL SEAL 28479 ENGINEER KEVIN G. BAILEY 5-30-13

STV/Ralph Whitehead Associates, Inc.
1000 West Morehead St., Ste. 200
Charlotte, NC 28208
NC License No. F-0991

REVISIONS						SHEET NO.
NO.	BY:	DATE:	NO.	BY:	DATE:	S-15
1			3			TOTAL SHEETS
2			4			836

DRAWN BY : CLG DATE : 12-12
CHECKED BY : TRL DATE : 4-13

DESIGN ENGINEER OF RECORD: K. BAILEY DATE : 5-13

5/30/2013 4:48:26 PM R:\ustation\Finals\FDN Layout 4 of 5.dgn

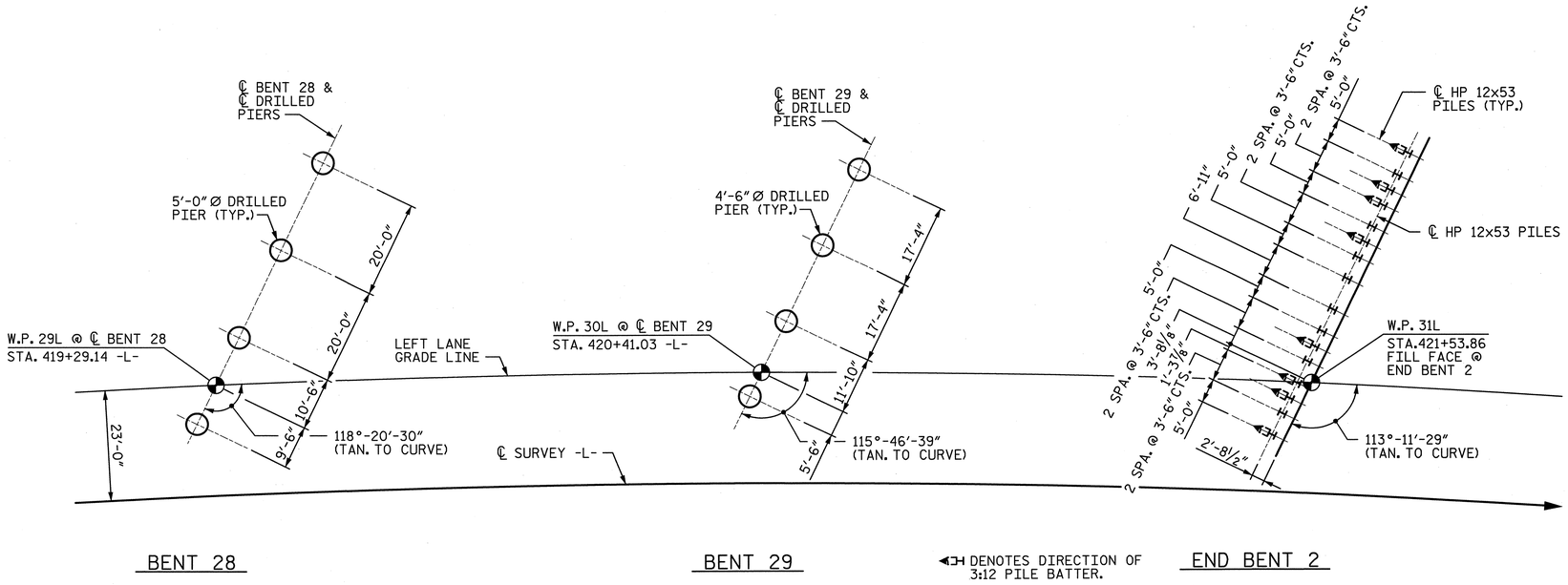

FOUNDATION LAYOUT

(DIMENSIONS TO DRILLED PIERS ARE TO ℄ OF DRILLED PIERS
AND ALONG ℄ BENT OR BENT CONTROL LINE)
(DIMENSIONS TO HP 12x53 PILES ARE TO ℄ HP 12x53 PILES)

PROJECT NO. U-2524C

GUILFORD COUNTY

STATION: POT 407+73.35 -L-
= POT 29+32.06 -Y4-

SHEET 5 OF 5

STATE OF NORTH CAROLINA
DEPARTMENT OF TRANSPORTATION
RALEIGH

GENERAL DRAWING
FOUNDATION LAYOUT
BRIDGE ON I-840
OVER BATTLEGROUND AVE.
-LEFT LANE-

NORTH CAROLINA PROFESSIONAL SEAL 18165 ENGINEER MARK F. ROBBINS 5-30-13

NORTH CAROLINA PROFESSIONAL SEAL 28479 ENGINEER KEVIN G. BAILEY 5-30-13

STV / Ralph Whitehead Associates, Inc.
1000 West Morehead St., Ste. 200
Charlotte, NC 28208
NC License No. F-0991

REVISIONS						
NO.	BY:	DATE:	NO.	BY:	DATE:	
1			3			
2			4			

SHEET NO. S-16
TOTAL SHEETS 836

DRAWN BY : CLG DATE : 12-12
CHECKED BY : TRL DATE : 4-13
DESIGN ENGINEER OF RECORD: K. BAILEY DATE : 5-13

5/30/2013 4:48:30 PM R:\ustation\Finals\FDN Layout 5 of 5.dgn

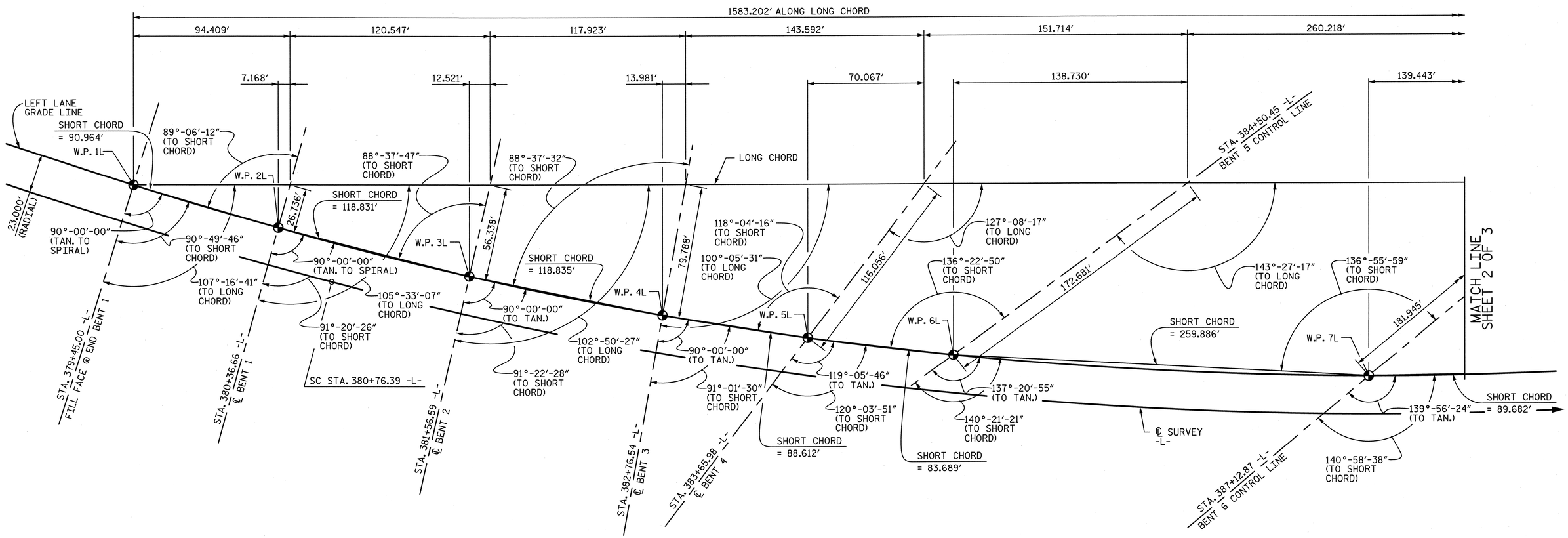

LONG CHORD LAYOUT

(NOTE : END BENTS AND BENTS ARE NOT PARALLEL.)

HORIZ. CURVE DATA
-L-

PIs = 379+16.55	PI = 385+42.44	PIs = 391+58.05
θs = 5°30'01.4" (LT.)	Δ = 21°07'10.9" (LT.)	θs = 5°30'01.4" (LT.)
Ls = 480.00'	D = 2°17'30.6"	Ls = 480.00'
LT = 320.15'	L = 921.52'	LT = 320.15'
ST = 160.14'	T = 466.05'	ST = 160.14'
	R = 2,500'	

PROJECT NO. U-2524C

GUILFORD COUNTY

STATION: POT 407+73.35 -L-
= POT 29+32.06 -Y4-

SHEET 1 OF 3

STATE OF NORTH CAROLINA
DEPARTMENT OF TRANSPORTATION
RALEIGH

GENERAL DRAWING
LONG CHORD LAYOUT
BRIDGE ON I-840
OVER BATTLEGROUND AVE.
-LEFT LANE-

NORTH CAROLINA PROFESSIONAL SEAL 18165 ENGINEER MARK F. ROBBINS 5-30-13

NORTH CAROLINA PROFESSIONAL SEAL 28479 ENGINEER KEVIN G. BAILEY 5-30-13

STV/ Ralph Whitehead Associates, Inc.
1000 West Morehead St., Ste. 200
Charlotte, NC 28208
NC License No. F-0991

REVISIONS								SHEET NO.
NO.	BY:	DATE:	NO.	BY:	DATE:			S-17
1			3					TOTAL SHEETS
2			4					836

DRAWN BY : ATH	DATE : 3-12	DESIGN ENGINEER OF RECORD: P. KELLY	DATE : 5-13
CHECKED BY : PEK	DATE : 12-12		

5/30/2013 4:48:34 PM R:\station\Finals\Long Chord Layout Sheet 1.dgn

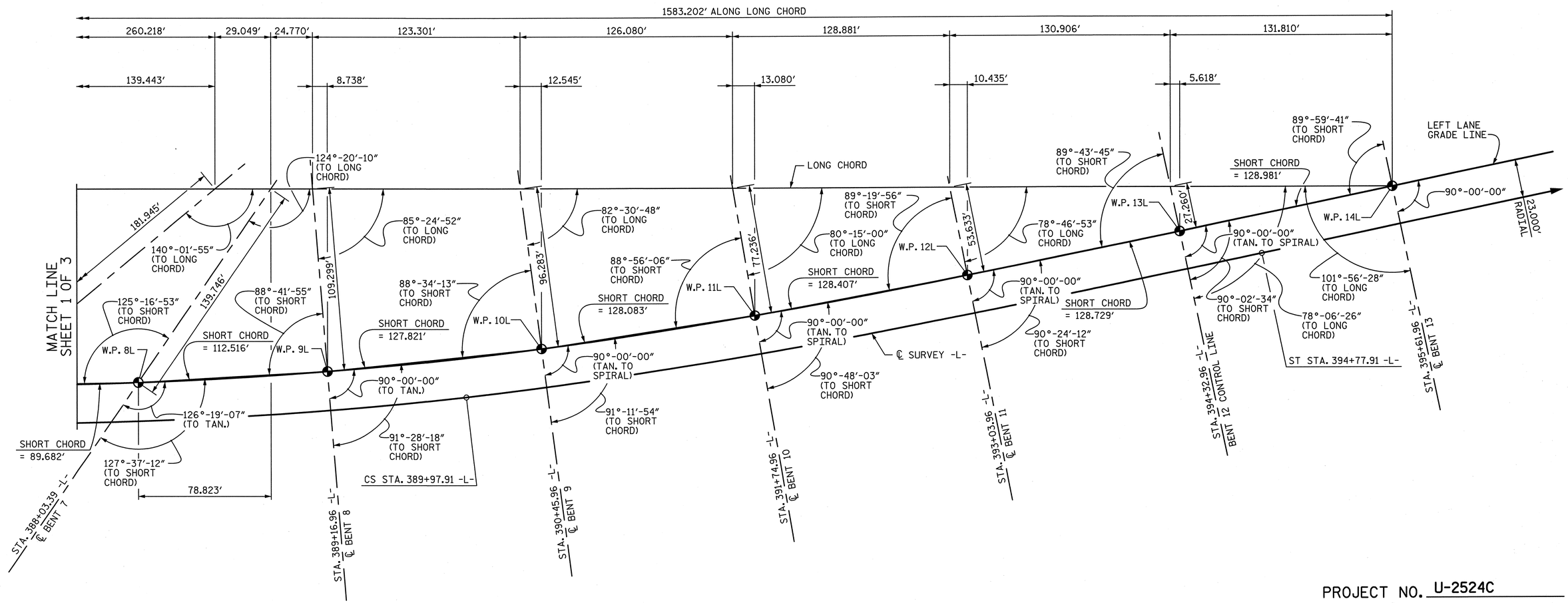

LONG CHORD LAYOUT

(NOTE : END BENTS AND BENTS ARE NOT PARALLEL.)

PROJECT NO. U-2524C

GUILFORD COUNTY

STATION: POT 407+73.35 -L-
= POT 29+32.06 -Y4-

SHEET 2 OF 3

HORIZ. CURVE DATA
-L-

PIs = 379+16.55	PI = 385+42.44	PIs = 391+58.05
θs = 5°30'01.4" (LT.)	Δ = 21°07'10.9" (LT.)	θs = 5°30'01.4" (LT.)
Ls = 480.00'	D = 2°17'30.6"	Ls = 480.00'
LT = 320.15'	L = 921.52'	LT = 320.15'
ST = 160.14'	T = 466.05'	ST = 160.14'
	R = 2,500'	

NORTH CAROLINA PROFESSIONAL SEAL 18165 ENGINEER MARK F. ROBBINS 5-30-13

NORTH CAROLINA PROFESSIONAL SEAL 28479 ENGINEER KEVIN G. BAILEY 5-30-13

STATE OF NORTH CAROLINA
DEPARTMENT OF TRANSPORTATION
RALEIGH

GENERAL DRAWING
LONG CHORD LAYOUT
BRIDGE ON I-840
OVER BATTLEGROUND AVE.
-LEFT LANE-

STV / Ralph Whitehead Associates, Inc.
1000 West Morehead St., Ste. 200
Charlotte, NC 28208
NC License No. F-0991

REVISIONS							SHEET NO.
NO.	BY:	DATE:	NO.	BY:	DATE:		S-18
1			3				TOTAL SHEETS
2			4				33

DRAWN BY : ATH	DATE : 3-12	DESIGN ENGINEER OF RECORD: P. KELLY	DATE : 5-13
CHECKED BY : PEK	DATE : 12-12		

5/30/2013 4:48:38 PM R:\ustation\Finals\Long Chord Layout Sheet 2.dgn

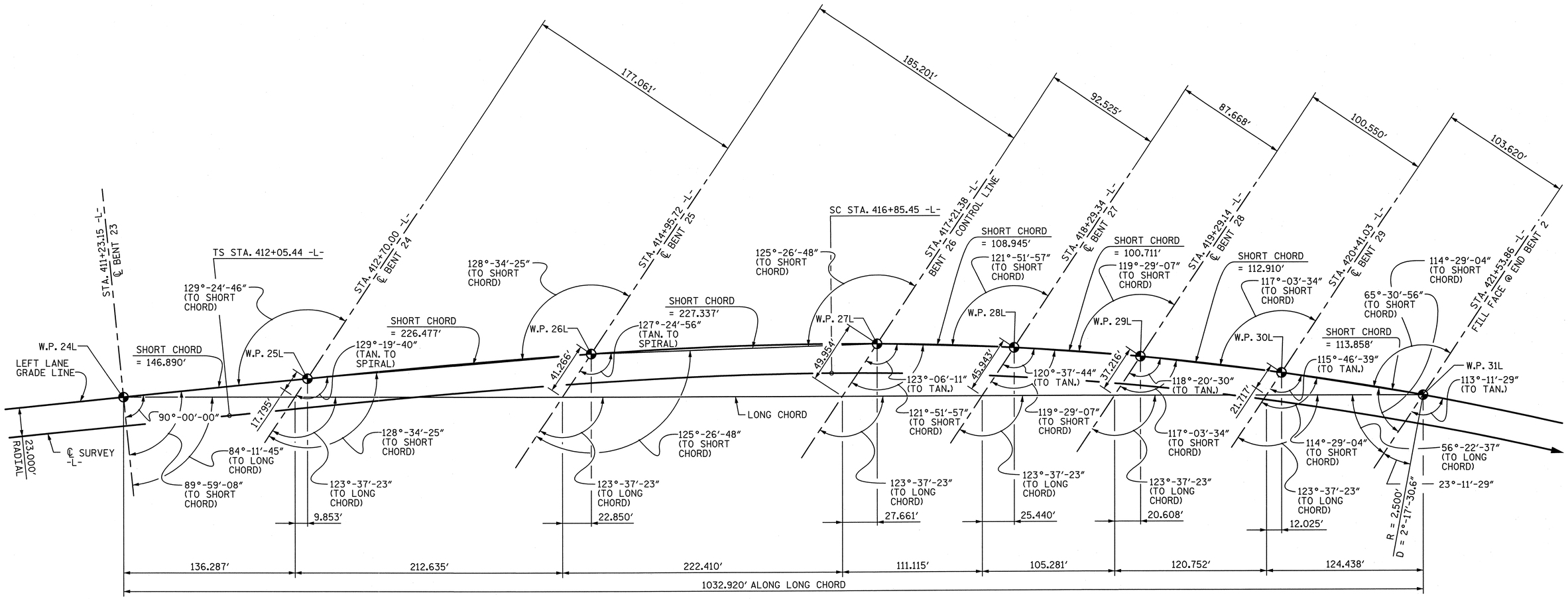

LONG CHORD LAYOUT

(NOTE : END BENT 2 AND BENTS 24 THROUGH 29 ARE PARALLEL.)

PROJECT NO. U-2524C

GUILFORD COUNTY

STATION: POT 407+73.35 -L-
= POT 29+32.06 -Y4-

SHEET 3 OF 3

HORIZ. CURVE DATA
-L-

PIs = 415+25.60	PI = 421+58.62	PIs = 427+80.87
θs = 5°30′01.4″(RT.)	Δ = 21°26′06.8″(RT.)	θs = 5°30′01.4″(RT.)
Ls = 480.00′	D = 2°17′30.6″	Ls = 480.00′
LT = 320.15′	L = 935.29′	LT = 320.15′
ST = 160.14′	T = 473.18′	ST = 160.14′
	R = 2,500′	

NORTH CAROLINA PROFESSIONAL SEAL 18165 ENGINEER MARK F. ROBBINS 5-30-13

NORTH CAROLINA PROFESSIONAL SEAL 28479 ENGINEER KEVIN G. BAILEY 5-30-13

STV/ Ralph Whitehead Associates, Inc.
1000 West Morehead St., Ste. 200
Charlotte, NC 28208
NC License No. F-0991

STATE OF NORTH CAROLINA
DEPARTMENT OF TRANSPORTATION
RALEIGH

GENERAL DRAWING
LONG CHORD LAYOUT
BRIDGE ON I-840
OVER BATTLEGROUND AVE.
-LEFT LANE-

REVISIONS								SHEET NO.
NO.	BY:	DATE:	NO.	BY:	DATE:			S-19
1			3					TOTAL SHEETS
2			4					836

DRAWN BY : ATH	DATE : 3-12	DESIGN ENGINEER OF RECORD: P. KELLY	DATE : 5-13
CHECKED BY : PEK	DATE : 12-12		

5/30/2013 4:48:44 PM R:\station\Finals\Long Chord Layout Sheet 3.dgn

BM #12
N 870838.9390, E 1746657.1000
STA. 174+63 -BL-, OFFSET 122' LT., ELEV. 748.99'
(STA. 421+03.23 -L-, OFFSET 129.906' LT.)

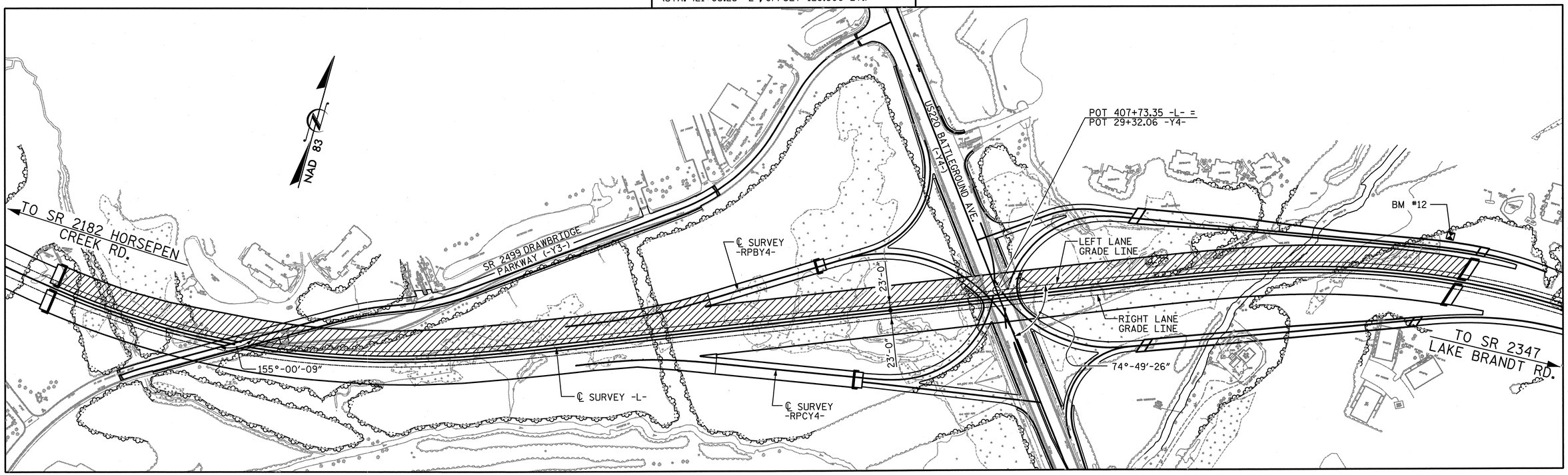

LOCATION SKETCH

PROJECT NO. U-2524C
GUILFORD COUNTY
STATION: POT 407+73.35 -L-
= POT 29+32.06 -Y4-

STATE OF NORTH CAROLINA
DEPARTMENT OF TRANSPORTATION
RALEIGH

GENERAL DRAWING
LOCATION SKETCH
BRIDGE ON I-840
OVER BATTLEGROUND AVE.
-LEFT LANE-

NORTH CAROLINA PROFESSIONAL SEAL 18165 ENGINEER MARK F. ROBBINS 5-30-13

NORTH CAROLINA PROFESSIONAL SEAL 28479 ENGINEER KEVIN G. BAILEY 5-30-13

STV / Ralph Whitehead Associates, Inc.
1000 West Morehead St., Ste. 200
Charlotte, NC 28208
NC License No. F-0991

REVISIONS							
NO.	BY:	DATE:	NO.	BY:	DATE:		
1			3				
2			4				

SHEET NO. S-20
TOTAL SHEETS 836

DRAWN BY : CLG DATE : 4-13
CHECKED BY : TRL DATE : 4-13
DESIGN ENGINEER OF RECORD: K. BAILEY DATE : 5-13

5/30/2013 4:48:50 PM R:\ustation\Finals\Location Sketch.dgn

NOTES:

1. ANY TEMPORARY SHORING NECESSARY FOR TEMPORARY WORK BRIDGE ACCESS THROUGH EXISTING OR PROPOSED GROUND LINE SHALL BE CONSIDERED INCIDENTAL TO THE CONTRACT PAY ITEM "CONSTRUCTION, MAINTENANCE AND REMOVAL OF TEMPORARY ACCESS AT STA. 407+73.35 -L-". NO SEPARATE PAYMENT WILL BE MADE FOR ANY TEMPORARY SHORING NEEDED FOR CONSTRUCTION OF THE TEMPORARY WORK BRIDGE.
2. UTILITIES NOT SHOWN FOR CLARITY. FOR UTILITY INFORMATION, SEE UTILITY PLANS AND SPECIAL PROVISIONS.
3. THIS TEMPORARY WORK BRIDGE IS SHOWN FOR CONCEPTUAL PURPOSES. THE CONTRACTOR MAY SUBMIT FOR APPROVAL AN ALTERNATE LAYOUT.
4. THE CONTRACTOR SHALL SUBMIT PLANS AND DETAILS FOR THE TEMPORARY WORK BRIDGE PRIOR TO BEGINNING CONSTRUCTION.
5. FOR CONSTRUCTION, MAINTANENCE AND REMOVAL OF TEMPORARY ACCESS AT STATION 407+73.35 -L-, SEE SPECIAL PROVISIONS.
6. FOR ADDITIONAL NOTES, SEE "GENERAL DRAWING GENERAL NOTES".

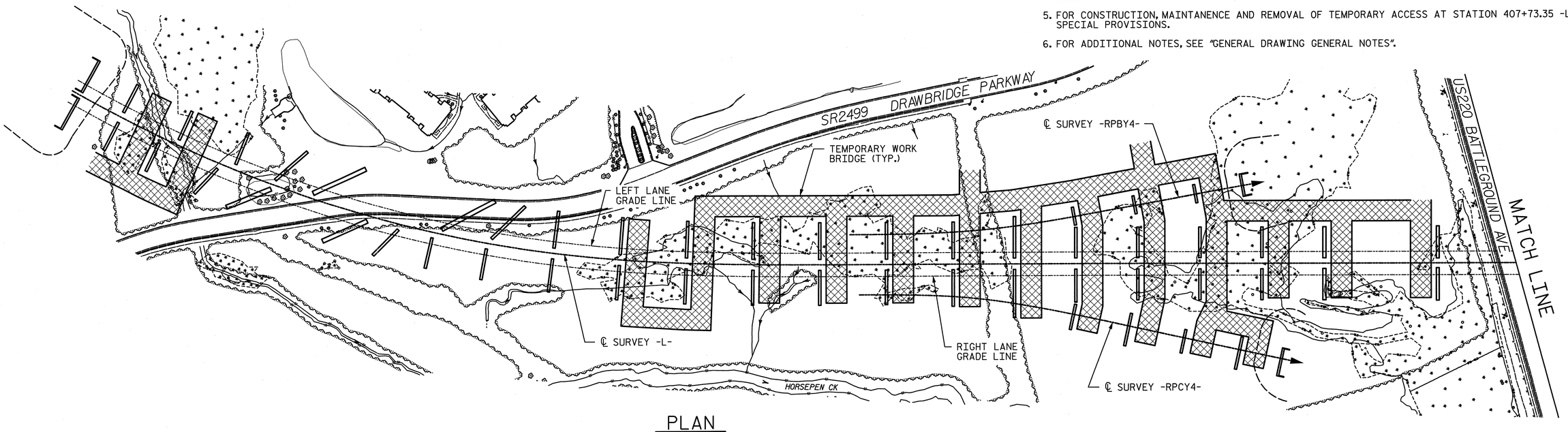

PLAN

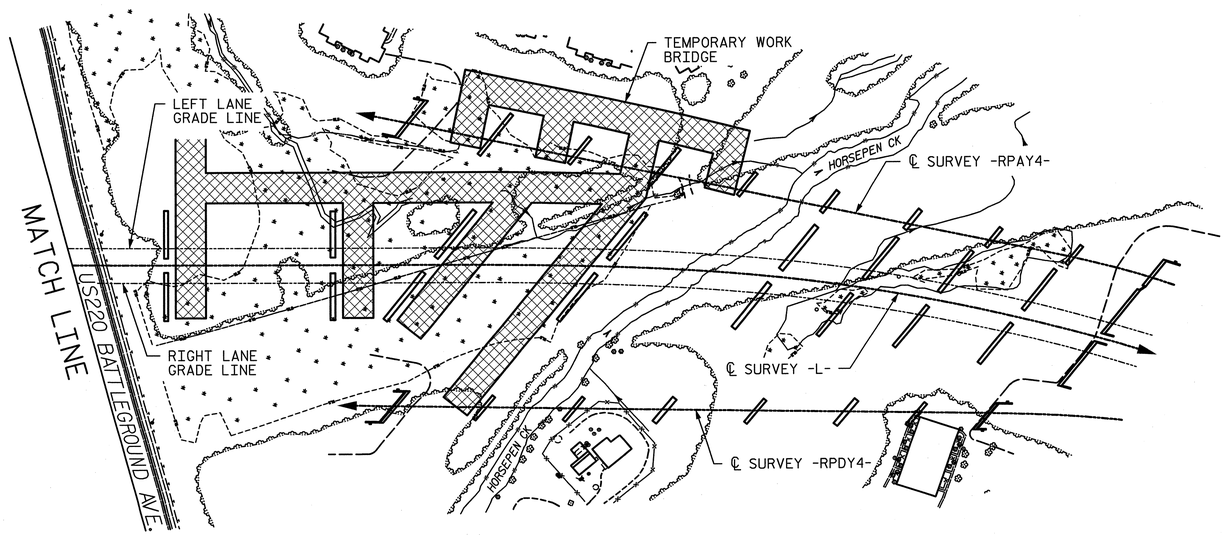

PLAN

NORTH CAROLINA PROFESSIONAL SEAL 18165 ENGINEER MARK F. ROBBINS 5-20-13

NORTH CAROLINA PROFESSIONAL SEAL 28479 ENGINEER KEVIN G. BAILEY 5-30-13

PROJECT NO. U-2524C

GUILFORD COUNTY

STATION: POT 407+73.35 -L-
= POT 29+32.06 -Y4-

STATE OF NORTH CAROLINA
DEPARTMENT OF TRANSPORTATION
RALEIGH

GENERAL DRAWING
TEMPORARY WORK BRIDGE
BRIDGE ON I-840
OVER BATTLEGROUND AVE.
-LEFT LANE-

REVISIONS								SHEET NO.
NO.	BY:	DATE:	NO.	BY:	DATE:			S-21
1			3					TOTAL SHEETS
2			4					83

STV / Ralph Whitehead Associates, Inc.
1000 West Morehead St., Ste. 200
Charlotte, NC 28208
NC License No. F-0991

DRAWN BY : CLG DATE : 4-13
CHECKED BY : TRL DATE : 4-13
DESIGN ENGINEER OF RECORD: K. BAILEY DATE : 5-13

5/30/2013 4:48:57 PM R:\ustation\Finals\Gen. Drawing Temporary Work Bridge Layout.dgn

GENERAL NOTES

GENERAL NOTES:

ASSUMED LIVE LOAD = HL-93 OR ALTERNATE LOADING.

FOR OTHER DESIGN DATA AND GENERAL NOTES, SEE SHEET SN.

THIS BRIDGE HAS BEEN DESIGNED IN ACCORDANCE WITH THE AASHTO LRFD BRIDGE DESIGN SPECIFICATIONS.

THIS BRIDGE IS LOCATED IN SEISMIC ZONE 1.

THE CONTRACTOR SHALL PROVIDE INDEPENDENT ASSURANCE SAMPLES OF REINFORCING STEEL AS FOLLOWS: FOR PROJECTS REQUIRING UP TO 400 TONS OF REINFORCING STEEL, ONE 30″SAMPLE OF EACH SIZE BAR USED, AND FOR PROJECTS REQUIRING OVER 400 TONS OF REINFORCING STEEL, TWO 30″SAMPLES OF EACH SIZE BAR USED. THE BARS FROM WHICH THE SAMPLES ARE TAKEN MUST THEN BE SPLICED WITH REPLACEMENT BARS OF THE SIZE AND LENGTH OF THE SAMPLE, PLUS A MINIMUM LAP SPLICE OF THIRTY BAR DIAMETERS. ALL COSTS FOR PROVIDING REINFORCING STEEL SAMPLES SHALL BE CONSIDERED INCIDENTAL AND NO ADDITIONAL PAYMENT WILL BE MADE.

THIS STRUCTURE HAS BEEN DESIGNED IN ACCORDANCE WITH HEC 18-EVALUATING SCOUR AT BRIDGES.

REMOVABLE FORMS MAY BE USED IN LIEU OF METAL STAY-IN-PLACE FORMS IN ACCORDANCE WITH ARTICLE 420-3 OF THE STANDARD SPECIFICATIONS.

NEEDLE BEAMS WILL NOT BE ALLOWED UNLESS OTHERWISE CALLED FOR ON THE PLANS OR APPROVED BY THE ENGINEER.

ALL STRUCTURAL STEEL SHALL BE AASHTO M270 GRADE 50W AND PAINTED IN ACCORDANCE WITH SYSTEM 4 OF ARTICLE 442-8 OF THE STANDARD SPECIFICATIONS UNLESS OTHERWISE NOTED ON THE PLANS.

FOR EROSION CONTROL MEASURES, SEE EROSION CONTROL PLANS.

FOR UTILITY INFORMATION, SEE UTILITY PLANS AND SPECIAL PROVISIONS.

THE CLASS AA CONCRETE IN THE BRIDGE DECK SHALL CONTAIN FLY ASH OR GROUND GRANULATED BLAST FURNACE SLAG AT THE SUBSTITUTION RATE SPECIFIED IN ARTICLE 1024-1 AND IN ACCORDANCE WITH ARTICLES 1024-5 AND 1024-6 OF THE STANDARD SPECIFICATIONS. NO PAYMENT WILL BE MADE FOR THIS SUBSTITUTION AS IT IS CONSIDERED INCIDENTIAL TO THE COST OF THE REINFORCED CONCRETE DECK SLAB.

FOR MAINTENANCE AND PROTECTION OF TRAFFIC BENEATH PROPOSED STRUCTURE, SEE SPECIAL PROVISIONS.

FOR CONSTRUCTION, MAINTENANCE AND REMOVAL OF TEMPORARY ACCESS AT STATION 407+73.35 -L-, SEE SPECIAL PROVISIONS.

FOR TEMPORARY BENTS, SEE SPECIAL PROVISIONS.

FOR BRIDGE DECK RIDEABILITY AND GROOVING AT STATION 407+73.35 -L-, SEE SPECIAL PROVISIONS.

FOR PLACING LOAD ON STRUCTURE MEMBERS, SEE SPECIAL PROVISIONS.

FOR STEEL REINFORCED ELASTOMERIC BEARINGS, SEE SPECIAL PROVISIONS.

FOR POT BEARINGS, SEE SPECIAL PROVISIONS.

FOR OPTIONAL DISC BEARINGS, SEE SPECIAL PROVISIONS.

FOR THERMAL SPRAYED COATINGS (METALLIZATION), SEE SPECIAL PROVISIONS.

FOR EXPANSION JOINT SEALS, SEE SPECIAL PROVISIONS.

SPECIAL SNOWPLOW PROTECTION IS REQUIRED. SEE SPECIAL PROVISIONS FOR MODULAR EXPANSION JOINT SEALS.

FOR FALSEWORK AND FORMWORK, SEE SPECIAL PROVISIONS.

FOR SUBMITTAL OF WORKING DRAWINGS, SEE SPECIAL PROVISIONS.

FOR CRANE SAFETY, SEE SPECIAL PROVISIONS.

FOR GROUT FOR STRUCTURES, SEE SPECIAL PROVISIONS.

FOR STRUCTURE DRAINAGE SYSTEM, SEE SPECIAL PROVISIONS.

FOUNDATION NOTES:

FOR PILES, SEE SECTION 450 OF THE STANDARD SPECIFICATIONS.

PILES AT END BENT NO. 1 AND END BENT NO. 2 ARE DESIGNED FOR A FACTORED RESISTANCE OF 125 TONS PER PILE.

DRIVE PILES AT END BENT NO. 1 AND END BENT NO. 2 TO A REQUIRED DRIVING RESISTANCE OF 210 TONS PER PILE.

FOR DRILLED PIERS, SEE SECTION 411 OF THE STANDARD SPECIFICATIONS.

DRILLED PIERS AT BENT NO. 1 THROUGH BENT NO. 29 ARE DESIGNED FOR A FACTORED RESISTANCE AS SHOWN IN THE SUMMARY TABLE. CHECK FIELD CONDITIONS FOR THE REQUIRED TIP RESISTANCES AS SHOWN IN THE SUMMARY TABLE.

PERMANENT STEEL CASINGS MAY BE REQUIRED FOR DRILLED PIERS AT BENT NO. 2, BENT NO. 3, BENT NO. 10 THROUGH BENT NO. 14, BENT NO. 17 THROUGH BENT NO. 19 AND BENT NO. 23 THROUGH BENT NO. 25. IF REQUIRED, DO NOT EXTEND PERMANENT CASINGS BELOW ELEVATION AS SHOWN IN THE SUMMARY TABLE WITHOUT PRIOR APPROVAL FROM THE ENGINEER. THE ENGINEER WILL DETERMINE THE NEED FOR PERMANENT CASINGS.

INSTALL PERMANENT STEEL CASINGS AT BENT NO. 2, BENT NO. 3, BENT NO. 10, BENT NO. 11, BENT NO. 12, BENT NO. 13, BENT NO. 14, BENT NO. 17, BENT NO. 18, BENT NO. 19, BENT NO. 23, BENT NO. 24, AND BENT NO. 25, BY VIBRATING, SCREWING OR DRIVING PERMANENT CASINGS BEFORE EXCAVATING OR DISTURBING ANY MATERIAL BELOW ELEVATIONS 752.5 FT, 753.0 FT, 743.6 FT, 743.5 FT, 744.0 FT, 743.9 FT, 743.5 FT, 742.8 FT, 742.7 FT, 742.8 FT, 747.0 FT, 740.2 FT AND 739.9 FT, RESPECTIVELY.

INSTALL DRILLED PIERS AT BENT NO. 1 THROUGH BENT NO. 3, BENT NO. 5 THROUGH BENT NO. 11, BENT NO. 13 THROUGH BENT NO. 17, BENT NO. 19 THROUGH BENT NO. 20, BENT NO. 22 AND BENT NO. 27 THROUGH BENT NO. 29 TO A TIP ELEVATIONS NO HIGHER THAN AS SHOWN IN THE SUMMARY TABLE AND WITH THE REQUIRED TIP RESISTANCES.

INSTALL DRILLED PIERS AT BENT NO. 4, BENT NO. 12, BENT NO. 18, BENT NO. 21, AND BENT NO. 23 THROUGH BENT NO. 26 TO A TIP ELEVATIONS NO HIGHER THAN AS SHOWN IN THE SUMMARY TABLE AND WITH THE REQUIRED TIP RESISTANCES AND PENETRATION OF AT LEAST 3 FT, 5 FT, 7 FT, 10 FT, 10 FT, 10 FT, 10 FT AND 10 FT, RESPECTIVELY.

THE SCOUR CRITICAL ELEVATIONS FOR BENT NO. 1 THROUGH BENT NO. 29 ARE SHOWN IN THE SUMMARY TABLE. SCOUR CRITICAL ELEVATIONS ARE USED TO MONITOR POSSIBLE SCOUR PROBLEMS DURING THE LIFE OF THE STRUCTURE.

SPT MAY BY REQUIRED FOR DRILLED PIERS AT BENT NO. 5 THROUGH BENT NO. 7, BENT 14 THROUGH BENT NO. 16, BENT NO. 28 AND BENT NO. 29. THE ENGINEER WILL DETERMINE THE NEED FOR SPT. FOR SPT TESTING, SEE SECTION 411 OF THE STANDARD SPECIFICATIONS.

SID INSPECTIONS MAY BE REQUIRED FOR DRILLED PIERS. THE ENGINEER WILL DETERMINE THE NEED FOR SID INSPECTIONS. FOR SID INSPECTIONS, SEE SECTION 411 OF THE STANDARD SPECIFICATIONS.

CSL TUBES ARE REQUIRED AND CSL TESTING MAY BE REQUIRED FOR DRILLED PIERS. THE ENGINEER WILL DETERMINE THE NEED FOR CSL TESTING. FOR CSL TESTING, SEE SECTION 411 OF THE STANDARD SPECIFICATIONS.

SUMMARY TABLE

BENT NO.	FACTORED RESISTANCE	REQUIRED TIP RESISTANCE	PERMANENT CASING ELEV.	TIP NO HIGHER THAN ELEV.	SCOUR CRITICAL ELEV.
BENT 1	590 TONS	40 TSF	NA	722 FT	753.0 FT
BENT 2	660 TONS	40 TSF	740 FT (LT), 737 FT (RT)	722 FT	749.0 FT
BENT 3	755 TONS	40 TSF	738 FT	709 FT	NO SCOUR
BENT 4	675 TONS	40 TSF	NA	708 FT (LT, CT), 714 FT (RT)	NO SCOUR
BENT 5	755 TONS	40 TSF	NA	706 FT (LT), 714 FT (CT), 722 FT (RT)	NO SCOUR
BENT 6	755 TONS	40 TSF	NA	707 FT	NO SCOUR
BENT 7	570 TONS	40 TSF	NA	692 FT (LT), 697 FT (CT, RT)	748.0 FT
BENT 8	750 TONS	40 TSF	NA	697 FT (LT), 699 FT (RT)	743.0 FT
BENT 9	800 TONS	40 TSF	NA	706 FT	741.0 FT
BENT 10	825 TONS	40 TSF	727 FT	705 FT	740.0 FT
BENT 11	840 TONS	40 TSF	728 FT	705 FT (LT), 708 (RT)	740.0 FT
BENT 12	825 TONS	40 TSF	725 FT	702 FT (LT), 706 FT (RT)	741.0 FT
BENT 13	825 TONS	40 TSF	724 FT	705 FT	741.0 FT
BENT 14	810 TONS	40 TSF	728 FT	705 FT	740.0 FT
BENT 15	755 TONS	40 TSF	NA	708 FT	740.0 FT
BENT 16	680 TONS	40 TSF	NA	715 FT (LT), 712 FT (RT)	740.0 FT
BENT 17	640 TONS	45 TSF	726 FT	715 FT	740.0 FT
BENT 18	610 TONS	40 TSF	725 FT (LT), 730 FT (RT)	715 FT (LT), 719 FT (RT)	740.0 FT
BENT 19	635 TONS	40 TSF	730 FT	718 FT	740.0 FT
BENT 20	755 TONS	40 TSF	NA	723 FT	NO SCOUR
BENT 21	1120 TONS	40 TSF	NA	717 FT	NO SCOUR
BENT 22	1120 TONS	40 TSF	NA	729 FT	NO SCOUR
BENT 23	840 TONS	40 TSF	733 FT	723 FT	NO SCOUR
BENT 24	685 TONS	40 TSF	727 FT	717 FT	737.0 FT
BENT 25	995 TONS	40 TSF	727 FT	717 FT	737.0 FT
BENT 26	595 TONS	40 TSF	NA	710 FT	737.0 FT
BENT 27	650 TONS	40 TSF	NA	710 FT	737.0 FT
BENT 28	665 TONS	40 TSF	NA	704 FT	737.0 FT
BENT 29	695 TONS	50 TSF	NA	721 FT	NO SCOUR

PROJECT NO. U-2524C
GUILFORD COUNTY
STATION: POT 407+73.35 -L-
= POT 29+32.06 -Y4-

NORTH CAROLINA PROFESSIONAL SEAL 18165 ENGINEER MARK F. ROBBINS 5-30-13

NORTH CAROLINA PROFESSIONAL SEAL 28479 ENGINEER KEVIN G. BAILEY 5-30-13

STV / Ralph Whitehead Associates, Inc.
1000 West Morehead St., Ste. 200
Charlotte, NC 28208
NC License No. F-0991

STATE OF NORTH CAROLINA
DEPARTMENT OF TRANSPORTATION
RALEIGH

GENERAL DRAWING
GENERAL NOTES
BRIDGE ON I-840
OVER BATTLEGROUND AVE.
-LEFT LANE-

REVISIONS								SHEET NO.
NO.	BY:	DATE:	NO.	BY:	DATE:			S-22
1			3					TOTAL SHEETS
2			4					836

DRAWN BY : CLG DATE : 3-13
CHECKED BY : TRL DATE : 4-13
DESIGN ENGINEER OF RECORD: K. BAILEY DATE : 5-13

5/30/2013 4:49:02 PM R:\ustation\Finals\General Drawing & Notes.dgn

TOTAL BILL OF MATERIAL

	CONSTRUCTION, MAINTENANCE AND REMOVAL OF TEMPORARY ACCESS AT STA. 407+73.35 -L-	4'-6" DIA. DRILLED PIER IN SOIL	5'-0" DIA. DRILLED PIER IN SOIL	4'-6" DIA. DRILLED PIER NOT IN SOIL	5'-0" DIA. DRILLED PIER NOT IN SOIL	PERMANENT STEEL CASING FOR 4'-6" DRILLED PIER	PERMANENT STEEL CASING FOR 5'-0" DRILLED PIER	SID INSPECTIONS	SPT TESTING	CSL TESTING	REINFORCED CONCRETE DECK SLAB	GROOVING BRIDGE FLOORS	CLASS A CONCRETE	BRIDGE APPROACH SLABS, AT 407+73.35 -L-	REINFORCING STEEL	SPIRAL COLUMN REINFORCING STEEL	MODIFIED 72" PRESTRESSED CONCRETE GIRDERS		STRUCTURAL STEEL (APPROX.)	HP12X53 STEEL PILES		CONCRETE BARRIER RAIL
	LUMP SUM	LIN. FT.	LIN. FT.	LIN. FT.	LIN. FT.	LIN. FT.	LIN. FT.	EACH	EACH	EACH	SQ. FT.	SQ. FT.	CU. YDS.	LUMP SUM	LBS.	LBS.	NO.	LIN. FT.	LBS.	NO.	LIN. FT.	LIN. FT.
SUPERSTRUCTURE	LUMP SUM										287,750.3	264,092.8		LUMP SUM			113	12,141.6	6,660,100			8,465.0
END BENT 1													72.4		9,918					14	945	
BENT 1			100		49								103.7		43,457	9,853						
BENT 2			96		32		66						113.5		43,423	9,715						
BENT 3			149		37		74						112.3		50,117	11,333						
BENT 4			171		47								147.6		61,152	13,823						
BENT 5			284		37				2				332.2		93,960	15,665						
BENT 6			325		53				2				338.3		103,963	16,844						
BENT 7			259		51				1				142.0		75,331	15,997						
BENT 8			187		30								118.7		55,400	12,247						
BENT 9			144		31								120.0		50,592	11,120						
BENT 10			146		32		94						120.0		50,926	11,223						
BENT 11			137		35		90						146.6		59,531	10,282						
BENT 12			147		35		102						142.6		60,777	10,616						
BENT 13			140		36		104						142.3		59,845	10,376						
BENT 14			139		35		86		2				125.9		53,091	10,921						
BENT 15			166		37				4				148.5		63,766	13,051						
BENT 16			104		35				2				108.7		44,336	9,798						
BENT 17		101		31		92							107.0		35,859	7,772						
BENT 18		79		44		85							106.2		34,951	7,468						
BENT 19		81		39		76							105.0		34,471	7,300						
BENT 20			58		41								147.8		41,958	7,028						
BENT 21			79		44								137.1		43,817	7,585						
BENT 22			40		44								128.1		38,043	5,791						
BENT 23			51		41		56						138.4		37,824	6,581						
BENT 24			91		52		97						169.0		50,906	9,189						
BENT 25			87		52		94						162.6		49,908	8,995						
BENT 26			129		50								182.4		55,670	10,082						
BENT 27			97		44								110.3		44,482	9,233						
BENT 28			123		42				2				109.4		48,140	9,949						
BENT 29		88		28					2				96.8		35,816	5,977						
END BENT 2													76.9		9,902					16	640	
TOTAL BRIDGE	LUMP SUM	349	3,449	142	1,022	253	863	15	17	12	287,750.3	264,092.8	4,312.3	LUMP SUM	1,541,332	295,814	113	12,141.6	6,660,100	30	1,585	8,465.0

TOTAL BILL OF MATERIAL CONT'D.

	RIP RAP CLASS II (2'-0" THICK)	GEOTEXTILE FOR DRAINAGE	POT BEARINGS	ELASTOMERIC BEARINGS	EXPANSION JOINT SEALS	MODULAR EXPANSION JOINT SEALS	STRUCTURE DRAINAGE SYSTEM AT STA. 407+73.35 -L-	MODIFIED 74" PRESTRESSED CONCRETE GIRDERS	
	TON	SQ. YD.	LUMP SUM	LUMP SUM	LUMP SUM	LUMP SUM	LUMP SUM	NO.	LIN. FT.
SUPERSTRUCTURE			LUMP SUM	LUMP SUM	LUMP SUM	LUMP SUM	LUMP SUM	48	6,104.0
END BENT 1	1,260	1,390							
BENTS									
END BENT 2	240	270							
TOTAL BRIDGE	1,500	1,660	LUMP SUM	LUMP SUM	LUMP SUM	LUMP SUM	LUMP SUM	48	6,104.0

PROJECT NO. U-2524C

GUILFORD COUNTY

STATION: POT 407+73.35 -L-
= POT 29+32.06 -Y4-

STATE OF NORTH CAROLINA
DEPARTMENT OF TRANSPORTATION
RALEIGH

GENERAL DRAWING
TOTAL BILL OF MATERIAL
BRIDGE ON I-840
OVER BATTLEGROUND AVE.
-LEFT LANE-

NORTH CAROLINA PROFESSIONAL ENGINEER SEAL 18165 MARK F. ROBBINS 6-7-13

NORTH CAROLINA PROFESSIONAL ENGINEER SEAL 28479 KEVIN G. BAILEY 6-7-13

STV / Ralph Whitehead Associates, Inc.
1000 West Morehead St., Ste. 200
Charlotte, NC 28208
NC License No. F-0991

REVISIONS							
NO.	BY:	DATE:	NO.	BY:	DATE:	SHEET NO. S-23
1			3			TOTAL SHEETS 836
2			4			

DRAWN BY : CLG/VMW DATE : 4-13
CHECKED BY : TRL DATE : 4-13
DESIGN ENGINEER OF RECORD: K. BAILEY DATE : 5-13

6/7/2013 3:08:26 PM R:\ustation\Finals\Gen Dwg TotalBOM.dgn

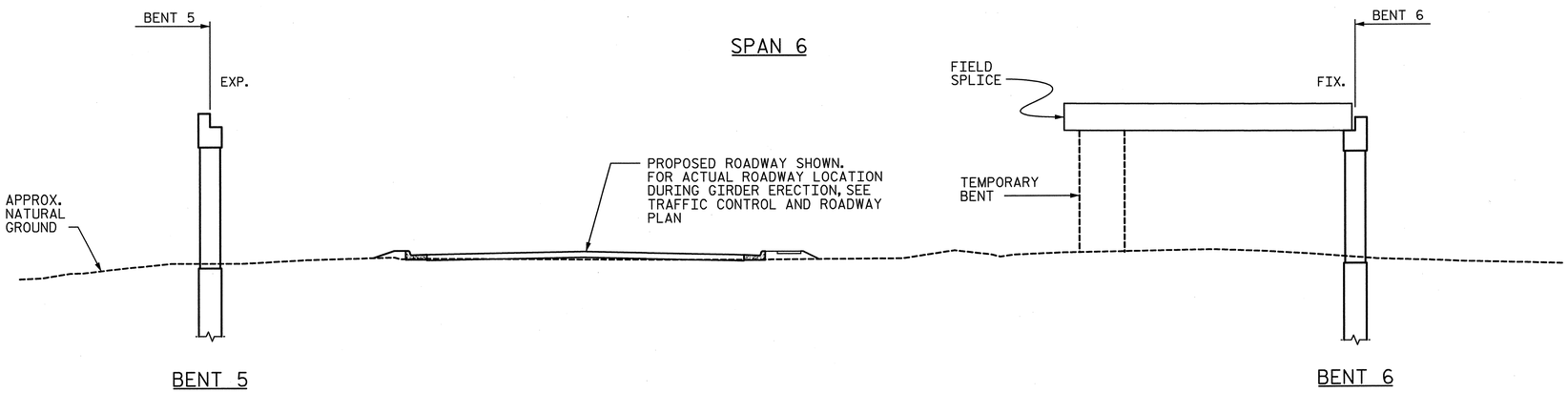

STAGE I GIRDER ERECTION

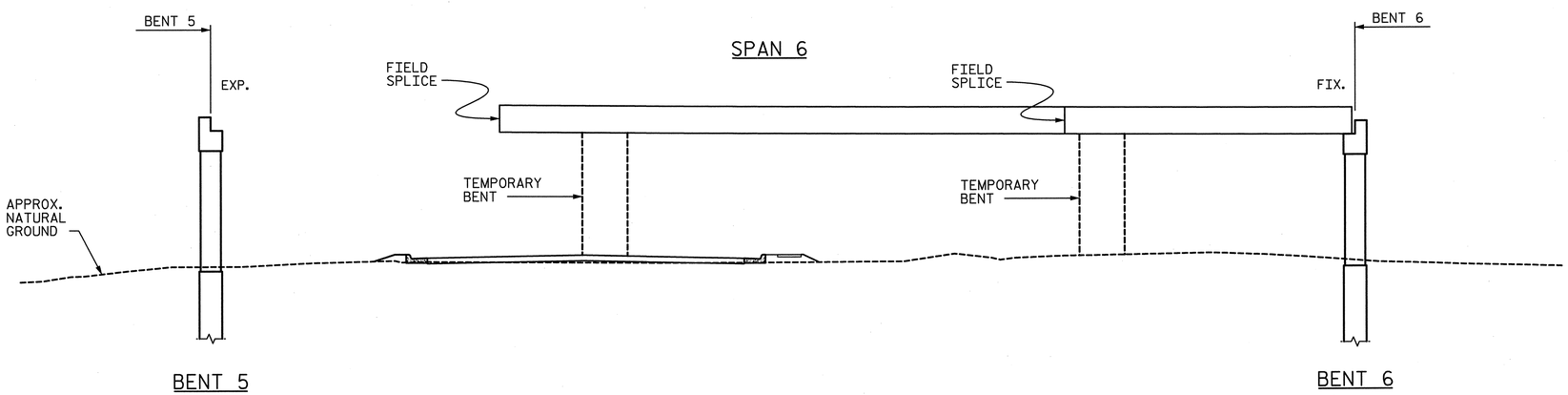

STAGE II GIRDER ERECTION

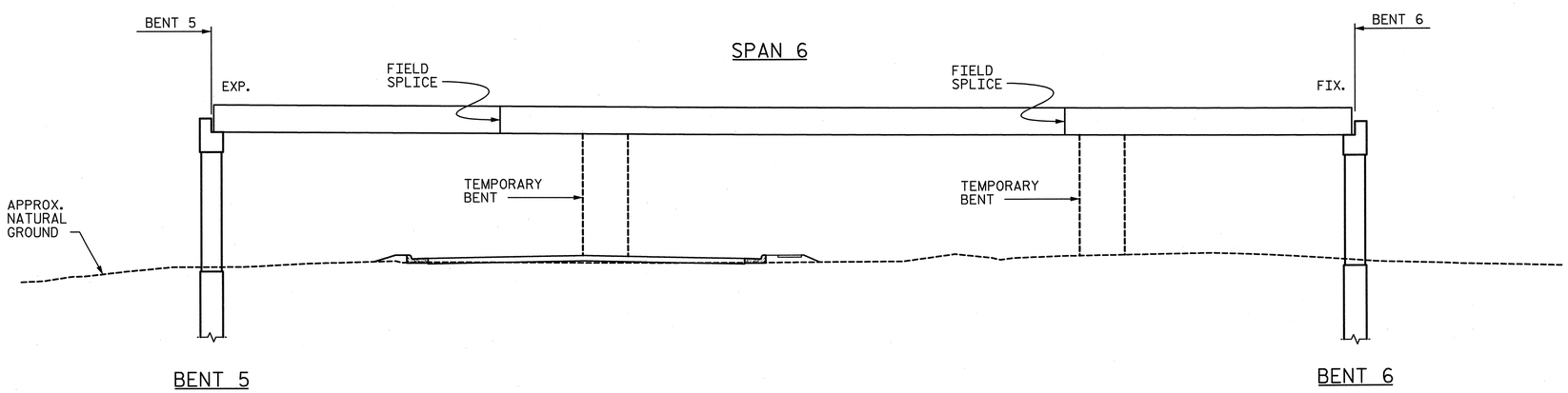

STAGE III GIRDER ERECTION

ERECTION NOTES

1. ERECT EACH SUBSEQUENT GIRDER WITH DIAPHRAGMS/CROSSFRAMES CONNECTING TO THE ADJACENT PREVIOUSLY ERECTED GIRDER AND TIGHTEN ALL BOLTS BEFORE RELEASING THE GIRDER.
2. THE STRUCTURAL STEEL SHALL BE SUPPORTED DURING ERECTION IN ITS CAMBERED POSITION. A MINIMUM OF TWO TEMPORARY BENTS SHALL BE USED.
3. TEMPORARY BENTS SHALL BE OF SUFFICIENT WIDTH/SIZE SUCH THAT ALL GIRDERS IN THE BRIDGE TYPICAL SECTION CAN BE FULLY SUPPORTED THROUGHOUT THE ERECTION OF ALL GIRDER SECTIONS AND FINAL INSTALLATION OF ALL HIGH STRENGTH BOLTS. SEQUENCES OR METHODS WHICH USE A COMBINATION OF PARTIAL WIDTH TEMPORARY BENTS AND CRANES WILL NOT BE PERMITTED.
4. PLACEMENT OF TEMPORARY BENTS SHALL BE COORDINATED WITH TRAFFIC PHASING REQUIREMENTS, SEE TRAFFIC CONTROL PLANS.
5. TEMPORARY BENTS SHALL REMAIN IN PLACE UNTIL ALL DIAPHRAGMS/CROSSFRAMES ARE IN PLACE AND ALL HIGH STRENGTH BOLTS ARE TIGHTENED.
6. TEMPORARY BENTS SHALL PROVIDE BEARING AT CONNECTOR PLATE LOCATIONS. WHEN CONNECTOR PLATES ARE USED AS TEMPORARY BEARING STIFFENER, DIAPHRAGMS MUST BE ATTACHED.
7. THE CONTRACTOR'S ERECTION PLANS SHALL INCLUDE A METHOD OF UNLOADING TEMPORARY BENTS THAT WILL UNIFORMLY TRANSFER THE STRUCTURAL WEIGHT TO THE DIAPHRAGMS/CROSSFRAMES AND THE GIRDERS.
8. PLANS FOR TEMPORARY BENT ERECTION, GIRDER ERECTION, AND TEMPORARY BENT REMOVAL SHALL BE SUBMITTED TO THE ENGINEER FOR REVIEW.
9. THE CONTRACTOR IS RESPONSIBLE FOR DESIGNING THE TEMPORARY BENTS. THE DESIGNS SHALL BE COMPLETED BY A PROFESSIONAL ENGINEER REGISTERED IN THE STATE OF NORTH CAROLINA. THE CONTRACTOR SHALL SUBMIT SIGNED AND SEALED WORKING DRAWINGS AND CALCULATIONS FOR APPROVAL BY THE ENGINEER.
10. DURING THE GIRDER ERECTION PROCEDURE, THE CONTRACTOR IS RESPONSIBLE FOR PROVIDING LATERAL BRACING AND OTHER MEANS OF SUPPORT, AS REQUIRED, TO ENSURE STABILITY OF THE GIRDERS, AVOID UPLIFT OF THE GIRDERS AT THE TEMPORARY BENTS AND ENSURE PLUMBNESS OF THE GIRDERS IN THE PERMANENT CONDITION.
11. NO SEPARATE MEASUREMENT OR PAYMENT WILL BE MADE FOR PROVIDING THE TEMPORARY BENT. THE COST FOR ALL MATERIALS, EQUIPMENT, TOOLS, LABOR AND ANY INCIDENTALS NECESSARY TO PROVIDE THE TEMPORARY BENT AND ERECTION SHALL BE CONSIDERED INCIDENTAL TO THE LUMP SUM BID PRICE FOR STRUCTURAL STEEL.
12. FOR ADDITIONAL NOTES, SEE "GENERAL DRAWING GENERAL NOTES" SHEET.

PROJECT NO. U-2524C
GUILFORD COUNTY
STATION: POT 407+73.35 -L-
= POT 29+32.06 -Y4-

SHEET 1 OF 3

NORTH CAROLINA PROFESSIONAL SEAL 28479 ENGINEER KEVIN G. BAILEY
5-30-13

STATE OF NORTH CAROLINA
DEPARTMENT OF TRANSPORTATION
RALEIGH

GIRDER ERECTION DETAILS
SPAN 6

-LEFT LANE-

REVISIONS						SHEET NO.
NO.	BY:	DATE:	NO.	BY:	DATE:	S-24
1			3			TOTAL SHEETS
2			4			836

STV/ Ralph Whitehead Associates, Inc.
1000 West Morehead St., Ste. 200
Charlotte, NC 28208
NC License No. F-0991

DRAWN BY : ACA	DATE : 12-12	DESIGN ENGINEER OF RECORD: M. ROBBINS	DATE : 5-13
CHECKED BY : MFR	DATE : 2-13		

5/30/2013 4:49:10 PM R:\ustation\Finals\Girder Erection Span 6 Sheet 1 of 3.dgn

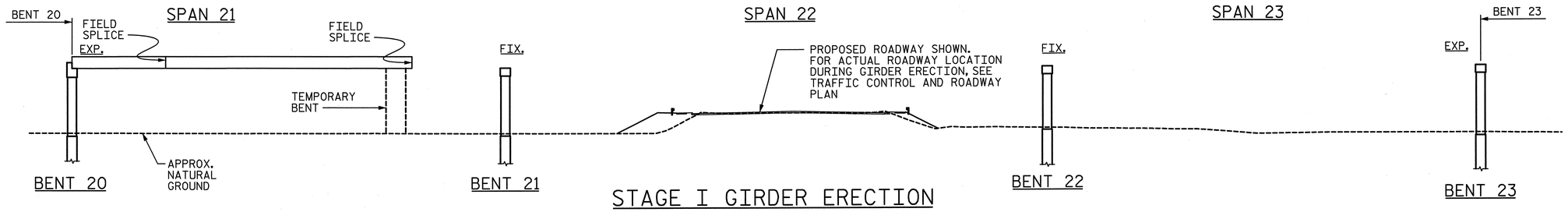

STAGE I GIRDER ERECTION

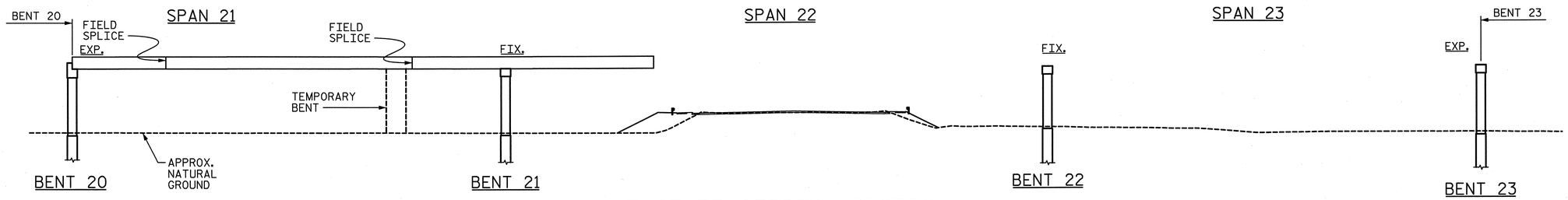

STAGE II GIRDER ERECTION

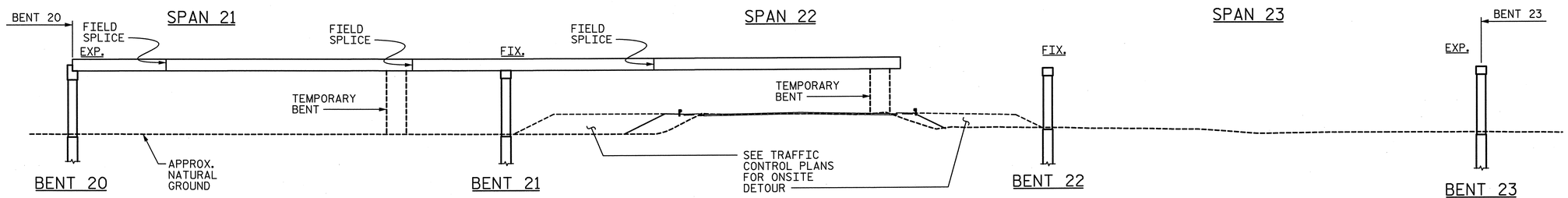

STAGE III GIRDER ERECTION

ERECTION NOTE

1. FOR ADDITIONAL ERECTION NOTES, SEE SHEET TITLED "GIRDER ERECTION DETAILS SPAN 6".
2. TEMPORARY BENT IN SPAN 21 SHALL BE DESIGNED SUCH THAT IT CAN RESIST UPWARD MOVEMENTS AND RETAIN CAMBERED GIRDER POSITION DURING SUBSEQUENT ERECTION STAGES.

PROJECT NO. U-2524C
GUILFORD COUNTY
STATION: POT 407+73.35 -L-
= POT 29+32.06 -Y4-
SHEET 2 OF 3

NORTH CAROLINA PROFESSIONAL SEAL 28479 ENGINEER KEVIN G. BAILEY 5-30-13

STATE OF NORTH CAROLINA
DEPARTMENT OF TRANSPORTATION
RALEIGH

GIRDER ERECTION DETAILS UNIT G

-LEFT LANE-

REVISIONS								SHEET NO.
NO.	BY:	DATE:	NO.	BY:	DATE:			S-25
1			3					TOTAL SHEETS
2			4					83

STV / Ralph Whitehead Associates, Inc.
1000 West Morehead St., Ste. 200
Charlotte, NC 28208
NC License No. F-0991

DRAWN BY : ACA	DATE : 12-12	DESIGN ENGINEER OF RECORD: M. ROBBINS	DATE : 5-13
CHECKED BY : MFR	DATE : 2-13		

5/30/2013 4:49:15 PM R:\ustation\Finals\Girder Erection Unit G Sheet 2 of 3.dgn

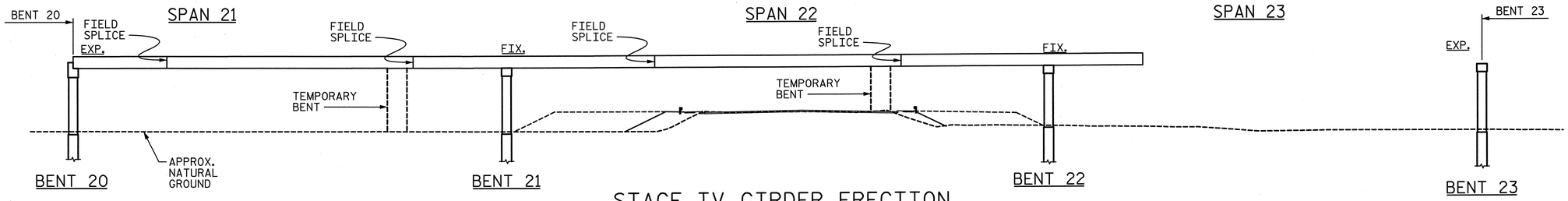

STAGE IV GIRDER ERECTION

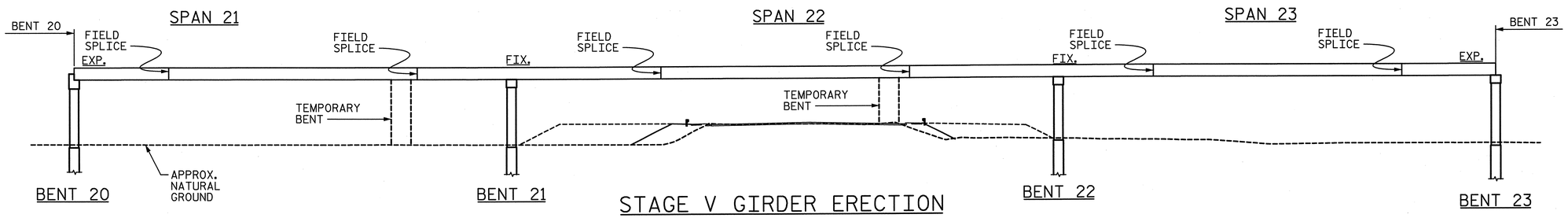

STAGE V GIRDER ERECTION

ERECTION NOTE

1. FOR ADDITIONAL ERECTION NOTES, SEE SHEET TITLED "GIRDER ERECTION DETAILS SPAN 6".
2. SEE TRAFFIC CONTROL PLANS FOR ON SITE DETOUR.

PROJECT NO. U-2524C

GUILFORD COUNTY

STATION: POT 407+73.35 -L-
= POT 29+32.06 -Y4-

SHEET 3 OF 3

NORTH CAROLINA PROFESSIONAL SEAL 28479 ENGINEER KEVIN G. BAILEY
5-30-13

STATE OF NORTH CAROLINA
DEPARTMENT OF TRANSPORTATION
RALEIGH

GIRDER ERECTION DETAILS UNIT G

-LEFT LANE-

REVISIONS						SHEET NO.
NO.	BY:	DATE:	NO.	BY:	DATE:	S-26
1			3			TOTAL SHEETS
2			4			836

STV / Ralph Whitehead Associates, Inc.
1000 West Morehead St., Ste. 200
Charlotte, NC 28208
NC License No. F-0991

DRAWN BY : ACA DATE : 12-12
CHECKED BY : MFR DATE : 2-13
DESIGN ENGINEER OF RECORD: M. ROBBINS DATE : 5-13

5/30/2013 4:49:9 PM R:\ustation\Finals\Girder Erection Unit G Sheet 3 of 3.dgn

LOAD AND RESISTANCE FACTOR RATING (LRFR) SUMMARY FOR PRESTRESSED CONCRETE GIRDERS

LEVEL		VEHICLE	WEIGHT (W) (TONS)	CONTROLLING LOAD RATING (#)	MINIMUM RATING FACTORS (RF)	TONS = W × RF	STRENGTH I LIMIT STATE											SERVICE III LIMIT STATE						COMMENT NUMBER
								MOMENT					SHEAR						MOMENT					
							LIVE-LOAD FACTORS (γ_{LL})	DISTRIBUTION FACTORS (DF)	RATING FACTOR	SPAN	GIRDER LOCATION	DISTANCE FROM LEFT END OF SPAN (ft)	DISTRIBUTION FACTORS (DF)	RATING FACTOR	SPAN	GIRDER LOCATION	DISTANCE FROM LEFT END OF SPAN (ft)	LIVE-LOAD FACTORS (γ_{LL})	DISTRIBUTION FACTORS (DF)	RATING FACTOR	SPAN	GIRDER LOCATION	DISTANCE FROM LEFT END OF SPAN (ft)	
DESIGN LOAD RATING		HL-93 (INVENTORY)	N/A	1	1.03	--	1.75	0.97	1.04	1	EL	44.0	0.95	1.03	1	EL	70.9	0.80	0.95	1.03	3	EL	58.5	
		HL-93 (OPERATING)	N/A		1.35	--	1.35	0.97	1.35	1	EL	44.0	1.11	1.70	29	I	89.2	N/A	--	--	--	--	--	
		HS-20 (INVENTORY)	36.000	2	1.40	50.400	1.75	0.93	1.40	7	I	39.8	0.95	1.74	1	EL	61.9	0.80	0.91	1.49	16	ER	58.2	
		HS-20 (OPERATING)	36.000		1.81	65.160	1.35	0.93	1.81	7	I	39.8	1.11	2.32	29	I	89.2	N/A	--	--	--	--	--	
LEGAL LOAD RATING	SINGLE VEHICLE (SV)	SH	12.500		3.90	48.750	1.40	1.00	4.22	7	I	31.4	1.11	6.20	29	I	89.2	0.80	0.98	3.90	5	EL	54.8	
		S3C	21.500		2.28	49.020	1.40	1.00	2.48	7	I	31.4	1.11	3.57	29	I	89.2	0.80	0.98	2.28	5	EL	54.8	
		S3A	22.750		2.15	48.913	1.40	1.00	2.35	7	I	31.4	1.11	3.38	29	I	89.2	0.80	0.98	2.15	5	EL	54.8	
		S4A	26.750		1.88	50.290	1.40	1.00	2.10	7	I	31.4	1.11	2.92	29	I	89.2	0.80	0.98	1.88	5	EL	54.8	
		S5A	30.500		1.66	50.630	1.40	1.00	1.86	7	I	31.4	1.11	2.64	29	I	89.2	0.80	0.98	1.66	5	EL	54.8	
		S6A	34.500		1.50	51.750	1.40	1.00	1.71	7	I	31.4	1.11	2.36	29	I	89.2	0.80	0.98	1.50	5	EL	54.8	
		S7B	38.500		1.36	52.360	1.40	1.00	1.56	7	I	31.4	1.11	2.18	29	I	89.2	0.80	0.95	1.36	3	EL	58.5	
		S7A	40.000	3	1.33	53.200	1.40	0.93	1.55	7	I	39.8	1.11	2.19	29	I	89.2	0.80	0.98	1.33	5	EL	54.8	
	TRUCK TRACTOR SEMI-TRAILER (TTST)	T4A	28.250		1.84	51.980	1.40	1.00	2.11	7	I	31.4	1.11	2.80	29	I	89.9	0.80	0.98	1.84	5	EL	54.8	
		T5B	32.000		1.62	51.840	1.40	1.00	1.85	7	I	31.4	1.11	2.63	29	I	89.2	0.80	0.98	1.62	5	EL	54.8	
		T6A	36.000		1.47	52.920	1.40	0.93	1.70	7	I	39.8	1.11	2.39	29	I	89.2	0.80	0.98	1.47	5	EL	54.8	
		T7A	40.000		1.35	54.000	1.40	0.93	1.59	7	I	39.8	1.11	2.19	29	I	89.2	0.80	0.98	1.35	5	EL	54.8	
		T7B	40.000		1.41	56.400	1.40	0.93	1.70	7	I	39.8	1.11	2.08	29	I	89.2	0.80	0.95	1.41	3	EL	46.7	

LOAD FACTORS:

DESIGN LOAD RATING FACTORS	LIMIT STATE	γ_{DC}	γ_{DW}
	STRENGTH I	1.25	1.50
	SERVICE III	1.00	1.00

NOTES:

1. MINIMUM RATING FACTORS ARE BASED ON THE STRENGTH I AND SERVICE III LIMIT STATES.
2. ALLOWABLE STRESSES FOR SERVICE III LIMIT STATE ARE AS REQUIRED FOR DESIGN.

(#) CONTROLLING LOAD RATING

(1) DESIGN LOAD RATING (HL-93)

(2) DESIGN LOAD RATING (HS-20)

(3) LEGAL LOAD RATING **

** SEE CHART FOR VEHICLE TYPE

GIRDER LOCATION

I - INTERIOR GIRDER
EL - EXTERIOR LEFT GIRDER
ER - EXTERIOR RIGHT GIRDER

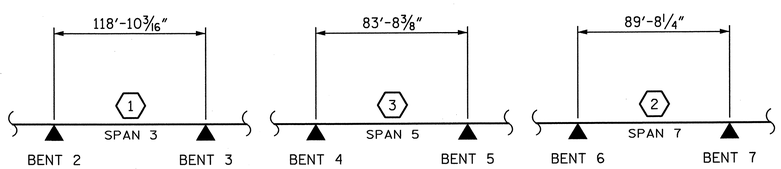

LRFR SUMMARY

(SPAN LENGTHS ARE ALONG GRADELINE)

PROJECT NO. U-2524C
GUILFORD COUNTY
STATION: POT 407+73.35 -L-
= POT 29+32.06 -Y4-

STATE OF NORTH CAROLINA
DEPARTMENT OF TRANSPORTATION
RALEIGH

LRFR SUMMARY FOR PRESTRESSED CONCRETE GIRDERS (INTERSTATE TRAFFIC)
-LEFT LANE-

NORTH CAROLINA PROFESSIONAL SEAL 28479 ENGINEER KEVIN G. BAILEY
5-30-13

STV / Ralph Whitehead Associates, Inc.
1000 West Morehead St., Ste. 200
Charlotte, NC 28208
NC License No. F-0991

REVISIONS								
NO.	BY:	DATE:	NO.	BY:	DATE:	SHEET NO. S-27
1			3			TOTAL SHEETS 836
2			4			

DRAWN BY : ACA DATE : 12-12
CHECKED BY : TJT DATE : 2-13
DESIGN ENGINEER OF RECORD: T. TOWNSEND DATE : 5-13

5/30/2013 4:49:24 PM R:\ustation\Finals\LRFR Conc.dgn

LOAD AND RESISTANCE FACTOR RATING (LRFR) SUMMARY FOR STEEL GIRDERS

LEVEL		VEHICLE	WEIGHT (W) (TONS)	CONTROLLING LOAD RATING (#)	MINIMUM RATING FACTORS (RF)	TONS = W × RF	STRENGTH I LIMIT STATE											SERVICE II LIMIT STATE						COMMENT NUMBER
							LIVE-LOAD FACTORS (γ_{LL})	MOMENT					SHEAR					LIVE-LOAD FACTORS (γ_{LL})	MOMENT					
								DISTRIBUTION FACTORS (DF)	RATING FACTOR	SPAN	GIRDER LOCATION	DISTANCE FROM LEFT END OF SPAN (ft)	DISTRIBUTION FACTORS (DF)	RATING FACTOR	SPAN	GIRDER LOCATION	DISTANCE FROM LEFT END OF SPAN (ft)		DISTRIBUTION FACTORS (DF)	RATING FACTOR	SPAN	GIRDER LOCATION	DISTANCE FROM LEFT END OF SPAN (ft)	
DESIGN LOAD RATING		HL-93 (INVENTORY)	N/A	1	1.04	--	1.75	0.89	1.04	21	EL	198.25	1.03	1.17	24	I	0.00	1.30	0.76	1.04	21	EL	198.25	
		HL-93 (OPERATING)	N/A		1.35	--	1.35	0.89	1.35	21	EL	198.25	1.03	1.52	24	I	0.00	1.00	0.76	1.35	21	EL	198.25	
		HS-20 (INVENTORY)	36.00	2	1.40	50.400	1.75	0.86	1.40	26	EL	0.00	0.86	1.64	6	ER	254.75	1.30	0.89	2.01	24	EL	90.49	
		HS-20 (OPERATING)	36.00		1.81	65.160	1.35	0.86	1.81	26	EL	0.00	0.86	2.13	6	ER	254.75	1.00	0.89	2.62	24	EL	90.49	
LEGAL LOAD RATING	SINGLE VEHICLE (SV)	SH	12.50		3.73	46.625	1.40	0.78	6.03	26	ER	174.50	1.03	6.66	24	I	0.00	1.30	0.89	3.73	24	EL	53.75	
		S3C	21.50		2.19	47.085	1.40	0.78	3.59	26	ER	174.50	1.03	3.82	24	I	0.00	1.30	0.89	2.19	24	EL	53.75	
		S3A	22.75		2.08	47.320	1.40	0.78	3.43	26	ER	174.50	1.03	3.61	24	I	0.00	1.30	0.89	2.08	24	EL	53.75	
		S4A	26.75		1.77	47.348	1.40	0.78	3.11	26	ER	174.50	1.03	3.12	24	I	0.00	1.30	0.89	1.77	24	EL	53.75	
		S5A	30.50		1.58	48.190	1.40	0.78	2.78	26	ER	174.50	1.03	2.79	24	I	0.00	1.30	0.89	1.58	24	EL	53.75	
		S6A	34.50		1.70	58.650	1.40	0.86	2.50	25	EL	48.91	1.03	2.49	24	I	0.00	1.30	0.89	1.70	24	EL	53.75	
		S7B	38.50		1.56	60.060	1.40	0.86	2.26	25	EL	48.91	1.03	2.27	24	I	0.00	1.30	0.89	1.56	24	EL	53.75	
		S7A	40.00		1.75	70.000	1.40	0.86	2.22	25	EL	48.91	1.03	2.23	24	I	0.00	1.30	0.74	1.75	24	I	53.75	
	TRUCK TRACTOR SEMI-TRAILER (TTST)	T4A	28.25		1.73	48.873	1.40	0.78	2.95	26	ER	174.50	1.03	3.04	24	I	0.00	1.30	0.89	1.73	24	EL	53.75	
		T5B	32.00		1.53	48.960	1.40	0.86	2.71	25	EL	48.91	1.03	2.70	24	I	0.00	1.30	0.89	1.53	24	EL	53.75	
		T6A	36.00		1.67	60.120	1.40	0.86	2.46	25	EL	48.91	1.03	2.44	24	I	0.00	1.30	0.89	1.67	24	EL	53.75	
		T7A	40.00		1.53	61.200	1.40	0.86	2.23	25	EL	48.91	1.03	2.22	24	I	0.00	1.30	0.89	1.53	24	EL	53.75	
		T7B	40.00	3	1.52	60.800	1.40	0.86	2.24	25	EL	48.91	1.03	2.18	24	I	0.00	1.30	0.89	1.52	24	EL	53.75	
FATIGUE		HL-93 (INVENTORY)	γ_{LL}=0.75		1.30																			

LOAD FACTORS:

DESIGN LOAD RATING FACTORS	LIMIT STATE	γ_{DC}	γ_{DW}
	STRENGTH I	1.25	1.50
	SERVICE II	1.00	1.00

NOTES:

1. MINIMUM RATING FACTORS ARE BASED ON THE STRENGTH I AND SERVICE II LIMIT STATES.
2. ALLOWABLE STRESSES FOR SERVICE II LIMIT STATE ARE AS REQUIRED FOR DESIGN.

(#) CONTROLLING LOAD RATING

(1) DESIGN LOAD RATING (HL-93)

(2) DESIGN LOAD RATING (HS-20)

(3) LEGAL LOAD RATING **

** SEE CHART FOR VEHICLE TYPE

GIRDER LOCATION

I - INTERIOR GIRDER
EL - EXTERIOR LEFT GIRDER
ER - EXTERIOR RIGHT GIRDER

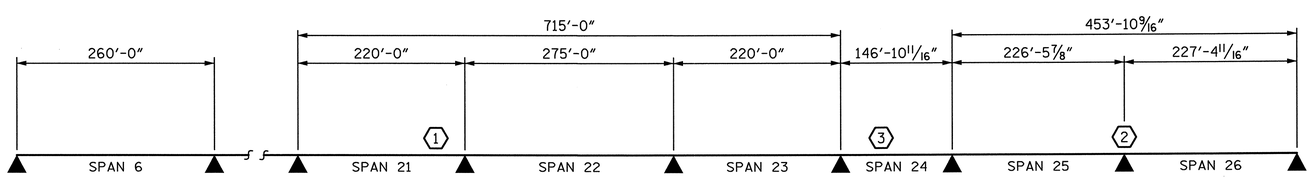

LRFR SUMMARY

(SPAN LENGTHS ARE ALONG GRADELINE)

PROJECT NO. U-2524C
GUILFORD COUNTY
STATION: POT 407+73.35 -L-
= POT 29+32.06 -Y4-

STATE OF NORTH CAROLINA
DEPARTMENT OF TRANSPORTATION
RALEIGH

LRFR SUMMARY FOR STEEL GIRDERS

(INTERSTATE TRAFFIC)
-LEFT LANE-

NORTH CAROLINA PROFESSIONAL SEAL 28479 ENGINEER KEVIN G. BAILEY 6-7-13

STV / Ralph Whitehead Associates, Inc.
1000 West Morehead St., Ste. 200
Charlotte, NC 28208
NC License No. F-0991

REVISIONS								
NO.	BY:	DATE:	NO.	BY:	DATE:		SHEET NO. S-28
1			3				TOTAL SHEETS 836
2			4				

DRAWN BY : ACA DATE : 5-13
CHECKED BY : TJT DATE : 5-13
DESIGN ENGINEER OF RECORD: T. TOWNSEND DATE : 5-13

6/7/2013 10:32:17 AM R:\ustation\Finals\LRFR Steel.dgn

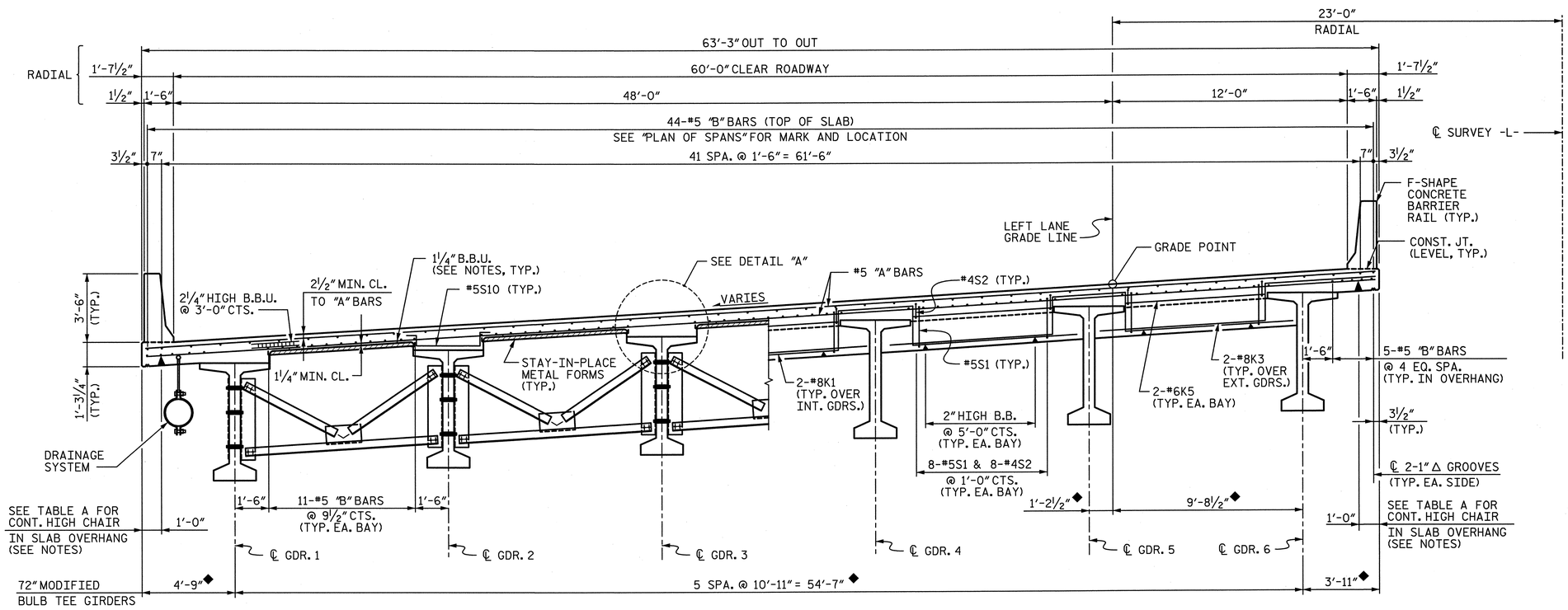

INTERMEDIATE DIAPHRAGMS

END DIAPHRAGMS

TYPICAL SECTION - SPANS 1 & 2

◆ DIMENSIONS SHOWN ARE RADIAL TO CURVES CONCENTRIC WITH ℄ SURVEY -L-. GIRDERS ARE ON CHORDS OF THESE CONCENTRIC CURVES FOR THE SPAN.

NOTES:

1. PROVIDE A 1¼" HIGH BEAM BOLSTER UPPER AT 4'-0" CTS. ATOP THE METAL STAY-IN-PLACE FORMS TO SUPPORT THE BOTTOM MAT OF "A" BARS. WHEN USING REMOVABLE FORMS, PROVIDE CONTINUOUS HIGH CHAIRS FOR METAL DECK (C.H.C.M.) @ 4'-0" CTS. WITH A HEIGHT TO SUPPORT THE BOTTOM MAT OF "A" BARS A CLEAR DISTANCE OF 2½" ABOVE THE TOP OF THE REMOVABLE FORM.
2. LONGITUDINAL STEEL MAY BE SHIFTED SLIGHTLY, AS NECESSARY, TO AVOID INTERFERENCE WITH STIRRUPS IN PRESTRESSED CONCRETE GIRDERS.
3. BARRIER RAIL IN A CONTINUOUS UNIT SHALL NOT BE CAST UNTIL ALL SLAB CONCRETE HAS BEEN CAST AND HAS REACHED A MINIMUM COMPRESSIVE STRENGTH OF 3000 PSI.
4. PREVIOUSLY CAST CONCRETE IN A CONTINUOUS UNIT SHALL HAVE ATTAINED A MINIMUM COMPRESSIVE STRENGTH OF 3000 PSI BEFORE ADDITIONAL CONCRETE IS CAST IN THE UNIT.
5. FOR INTERMEDIATE DIAPHRAGM DETAILS, SEE "INTERMEDIATE STEEL DIAPHRAGM DETAILS FOR PRESTRESSED CONCRETE MODIFIED BULB TEE GIRDERS" SHEET.
6. FOR END DIAPHRAGM AND CONTINUOUS DIAPHRAGM SECTIONS, SEE CORRESPONDING "SUPERSTRUCTURE DETAILS" SHEET.
7. FOR BARRIER RAIL DETAILS, SEE "PLAN OF CONCRETE BARRIER RAIL" SHEETS.
8. FOR "B" BAR MARKS AND LOCATIONS, SEE CORRESPONDING "PLAN OF SPANS" SHEET.
9. FOR DRAINAGE SYSTEM, SEE "STRUCTURE DRAINAGE SYSTEM" SHEETS.
10. SPAN DESIGNATIONS HAVE BEEN OMITTED FROM BAR CALLOUTS FOR CLARITY. SEE CORRESPONDING "PLAN OF SPANS" FOR COMPLETE BAR CALLOUT. THE COMPLETE BAR CALLOUT IS MARK-X. WHERE "X" IS THE UNIT DESIGNATION FOR CONTINUOUS SPANS AND THE SPAN DESIGNATION FOR SIMPLE SPANS.
11. HEIGHT OF BEAM BOLSTER & CONTINUOUS HIGH CHAIR IS CALCULATED @ ℄ BENT. CONTRACTOR SHALL ADJUST HEIGHTS, AS NECESSARY TO MAINTAIN PROPER CLEARANCE, DUE TO GIRDER CAMBER, SUPERELEVATION CHANGE AND/OR BUILD DOWN AT MODULAR JOINT LOCATIONS.
12. SHIFT "B" BARS AS NECESSARY TO CLEAR DECK DRAINS.

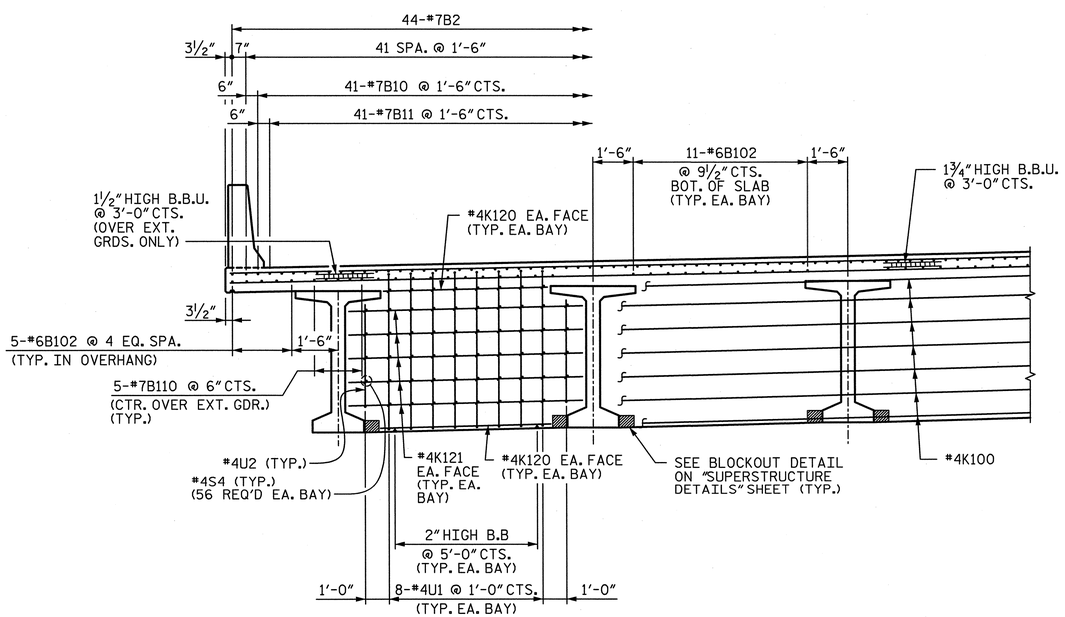

CONTINUOUS DIAPHRAGM

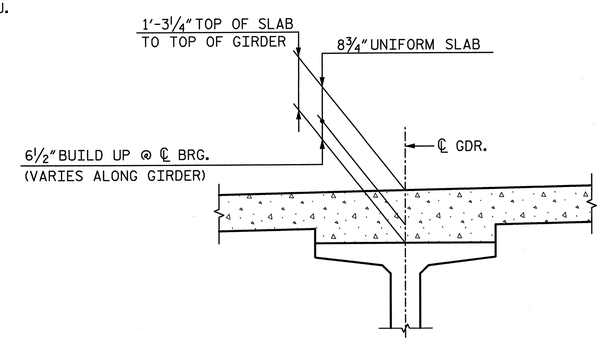

DETAIL "A"

FOR BUILD UP REINFORCING BARS, SEE "SUPERSTRUCTURE DETAILS" SHEET 6 OF 6

TABLE A		
BENT	LEFT OVERHANG	RIGHT OVERHANG
EB1	6¾"	8¾"
1	6½"	9"
2	6½"	9"

PROJECT NO. U-2524C

GUILFORD COUNTY

STATION: POT 407+73.35 -L-
= POT 29+32.06 -Y4-

STATE OF NORTH CAROLINA
DEPARTMENT OF TRANSPORTATION
RALEIGH

TYPICAL SECTION
UNIT A
SPANS 1 & 2

-LEFT LANE-

NORTH CAROLINA PROFESSIONAL SEAL 28479 ENGINEER KEVIN G. BAILEY 5-30-13

STV / Ralph Whitehead Associates, Inc.
1000 West Morehead St., Ste. 200
Charlotte, NC 28208
NC License No. F-0991

REVISIONS								SHEET NO.
NO.	BY:	DATE:	NO.	BY:	DATE:			S-29
1			3					TOTAL SHEETS
2			4					836

DRAWN BY : ACA DATE : 7-12
CHECKED BY : AJP DATE : 9-12
DESIGN ENGINEER OF RECORD: A. PETER DATE : 5-13

5/30/2013 4:49:32 PM R:\station\Finals\Typ Sect. Spans 1 & 2_lt.dgn

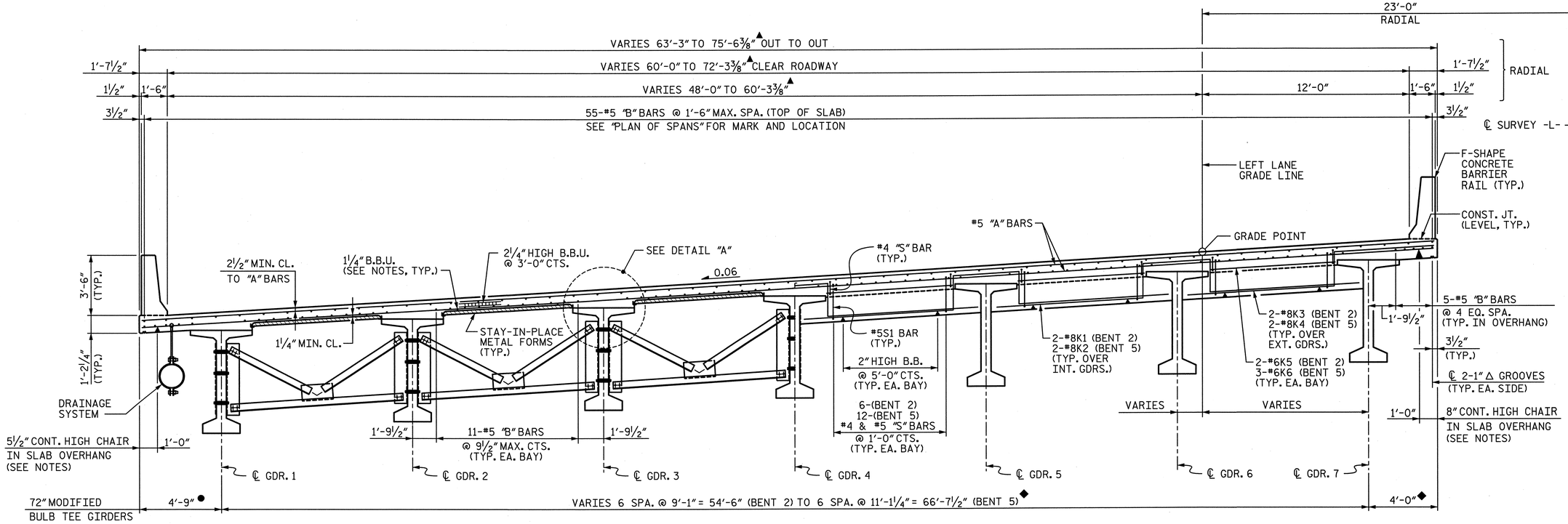

INTERMEDIATE DIAPHRAGMS

END DIAPHRAGMS

TYPICAL SECTION - SPANS 3-5

NOTES:

1. FOR TYPICAL SECTION NOTES, SEE "TYPICAL SECTION UNIT A SPANS 1 & 2".

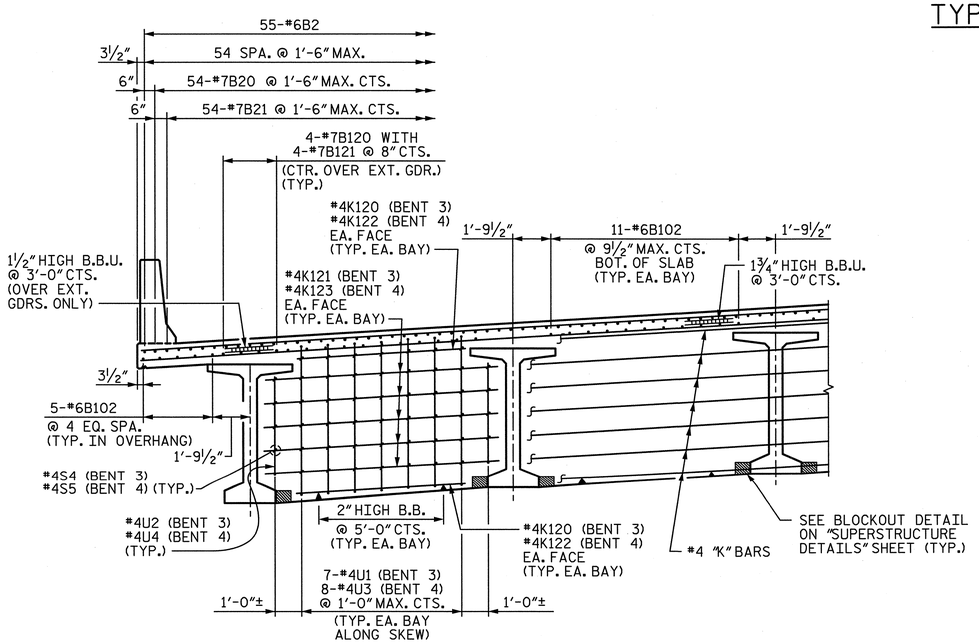

CONTINUOUS DIAPHRAGMS

BENT 3 SHOWN, BENT 4 SIMILAR

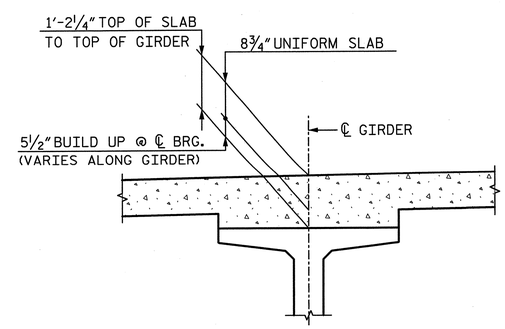

DETAIL "A"

▲ RADIAL DIMENSION THRU W.P. 6L

◆ DIMENSIONS SHOWN ARE AT ℄ BENT LOCATIONS. SEE FRAMING PLAN FOR ADDITIONAL INFORMATION.

● DIMENSIONS SHOWN ARE PERPENDICULAR TO LEFT EDGE OF DECK.

PROJECT NO. U-2524C

GUILFORD COUNTY

STATION: POT 407+73.35 -L-
= POT 29+32.06 -Y4-

STATE OF NORTH CAROLINA
DEPARTMENT OF TRANSPORTATION
RALEIGH

TYPICAL SECTION
UNIT B
SPANS 3-5

-LEFT LANE-

NORTH CAROLINA PROFESSIONAL SEAL 28479 ENGINEER KEVIN G. BAILEY 5-30-13

STV / Ralph Whitehead Associates, Inc.
1000 West Morehead St., Ste. 200
Charlotte, NC 28208
NC License No. F-0991

REVISIONS							SHEET NO.
NO.	BY:	DATE:	NO.	BY:	DATE:		S-30
1			3				TOTAL SHEETS
2			4				83

DRAWN BY : ACA DATE : 10-12
CHECKED BY : AJP DATE : 12-12

DESIGN ENGINEER OF RECORD: A. PETER DATE : 5-13

5/30/2013 4:49:36 PM R:\ustation\Finals\Typ Sect. Spans 3 thru 5_lt.dgn

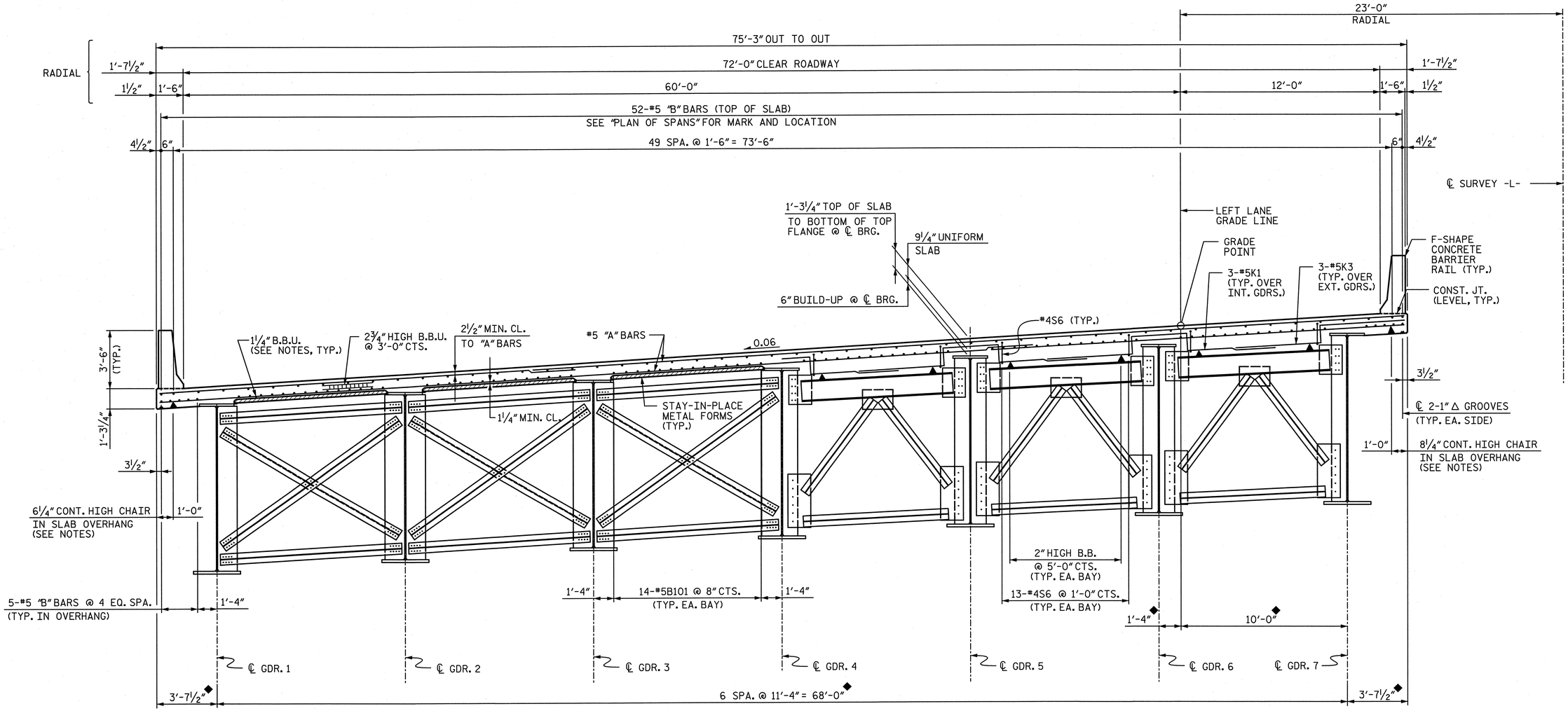

INTERMEDIATE DIAPHRAGMS

END DIAPHRAGMS

TYPICAL SECTION - SPAN 6

◆ DIMENSIONS SHOWN ARE RADIAL TO CURVES CONCENTRIC WITH ℄ SURVEY -L-.

NOTES:

1. PROVIDE A 1¼" HIGH BEAM BOLSTER UPPER AT 4'-0" CTS. ATOP THE METAL STAY-IN-PLACE FORMS TO SUPPORT THE BOTTOM MAT OF "A" BARS. WHEN USING REMOVABLE FORMS, PROVIDE CONTINUOUS HIGH CHAIRS FOR METAL DECK (C.H.C.M.) @ 4'-0" CTS. WITH A HEIGHT TO SUPPORT THE BOTTOM MAT OF "A" BARS A CLEAR DISTANCE OF 2½" ABOVE THE TOP OF THE REMOVABLE FORM.
2. STRUCTURAL STEEL ERECTION SHALL BE COMPLETE BEFORE FALSEWORK OR FORMS ARE PLACED ON THE SIMPLE SPAN OR CONTINUOUS UNIT.
3. BARRIER RAIL IN A CONTINUOUS UNIT SHALL NOT BE CAST UNTIL ALL SLAB CONCRETE HAS BEEN CAST AND HAS REACHED A MINIMUM COMPRESSIVE STRENGTH OF 3,000 PSI.
4. PREVIOUSLY CAST CONCRETE IN A CONTINUOUS UNIT SHALL HAVE ATTAINED A MINIMUM COMPRESSIVE STRENGTH OF 3,000 PSI BEFORE ADDITIONAL CONCRETE IS CAST IN THE UNIT.
5. FOR END DIAPHRAGM SECTIONS, SEE CORRESPONDING "SUPERSTRUCTURE DETAILS" SHEET.
6. FOR BARRIER RAIL DETAILS, SEE "PLAN OF CONCRETE BARRIER RAIL" SHEETS.
7. FOR "B" BAR MARKS AND LOCATIONS, SEE CORRESPONDING "PLAN OF SPANS" SHEET.
8. FOR DRAINAGE SYSTEM, SEE "STRUCTURE DRAINAGE SYSTEM" SHEETS.
9. SPAN DESIGNATIONS HAVE BEEN OMITTED FROM BAR CALLOUTS FOR CLARITY. SEE CORRESPONDING "PLAN OF SPANS" FOR COMPLETE BAR CALLOUT. THE COMPLETE BAR CALLOUT IS MARK-X. WHERE "X" IS THE UNIT DESIGNATION FOR CONTINUOUS SPANS AND THE SPAN DESIGNATION FOR SIMPLE SPANS.
10. HEIGHT OF BEAM BOLSTER & CONTINUOUS HIGH CHAIR IS CALCULATED @ ℄ BENT. CONTRACTOR SHALL ADJUST HEIGHTS, AS NECESSARY TO MAINTAIN PROPER CLEARANCE, DUE TO GIRDER CAMBER, SUPERELEVATION CHANGE AND/OR BUILD DOWN AT MODULAR JOINT LOCATIONS.
11. SHIFT "B" BARS AS NECESSARY TO CLEAR DECK DRAINS.
12. METAL STAY-IN-PLACE FORMS AND FALSEWORK SHALL NOT BE WELDED TO BEAM OR GIRDER FLANGES IN THE ZONES REQUIRING CHARPY V-NOTCH TEST. SEE "STRUCTURAL STEEL DETAILS" SHEETS.
13. THE CONTRACTOR MAY, WHEN NECESSARY, PROPOSE A SCHEME FOR AVOIDING INTERFERENCE BETWEEN METAL STAY-IN-PLACE FORM SUPPORTS OR FORMS AND GIRDER STIFFENER OR CONNECTOR PLATES. THE PROPOSAL SHALL BE INDICATED, AS APPROPRIATE, ON EITHER THE STEEL WORKING DRAWINGS OR THE METAL STAY-IN-PLACE FORMS WORKING DRAWINGS.
14. THE CONTRACTOR SHALL ADJUST THE GIRDER BUILDUPS AS NECESSARY TO INCORPORATE A MAXIMUM PERMISSIBLE VARIATION IN POT BEARING DEPTH OF ½". SEE SPECIAL PROVISIONS FOR POT BEARINGS.

PROJECT NO. U-2524C
GUILFORD COUNTY
STATION: POT 407+73.35 -L-
= POT 29+32.06 -Y4-

NORTH CAROLINA PROFESSIONAL SEAL 28479 ENGINEER KEVIN G. BAILEY
5-30-13

STATE OF NORTH CAROLINA
DEPARTMENT OF TRANSPORTATION
RALEIGH

TYPICAL SECTION
SPAN 6

-LEFT LANE-

STV/ Ralph Whitehead Associates, Inc.
1000 West Morehead St., Ste. 200
Charlotte, NC 28208
NC License No. F-0991

REVISIONS							SHEET NO.
NO.	BY:	DATE:	NO.	BY:	DATE:		S-31
1			3				TOTAL SHEETS
2			4				836

DRAWN BY : ACA	DATE : 1-13	DESIGN ENGINEER OF RECORD: A. PETER	DATE : 5-13
CHECKED BY : AJP	DATE : 2-13		

5/30/2013 6:38:31 PM R:\ustation\Finals\Typ Sect. Span 6_lt.dgn

NOTES:

1. FOR TYPICAL SECTION NOTES, SEE "TYPICAL SECTION UNIT A SPANS 1 & 2"

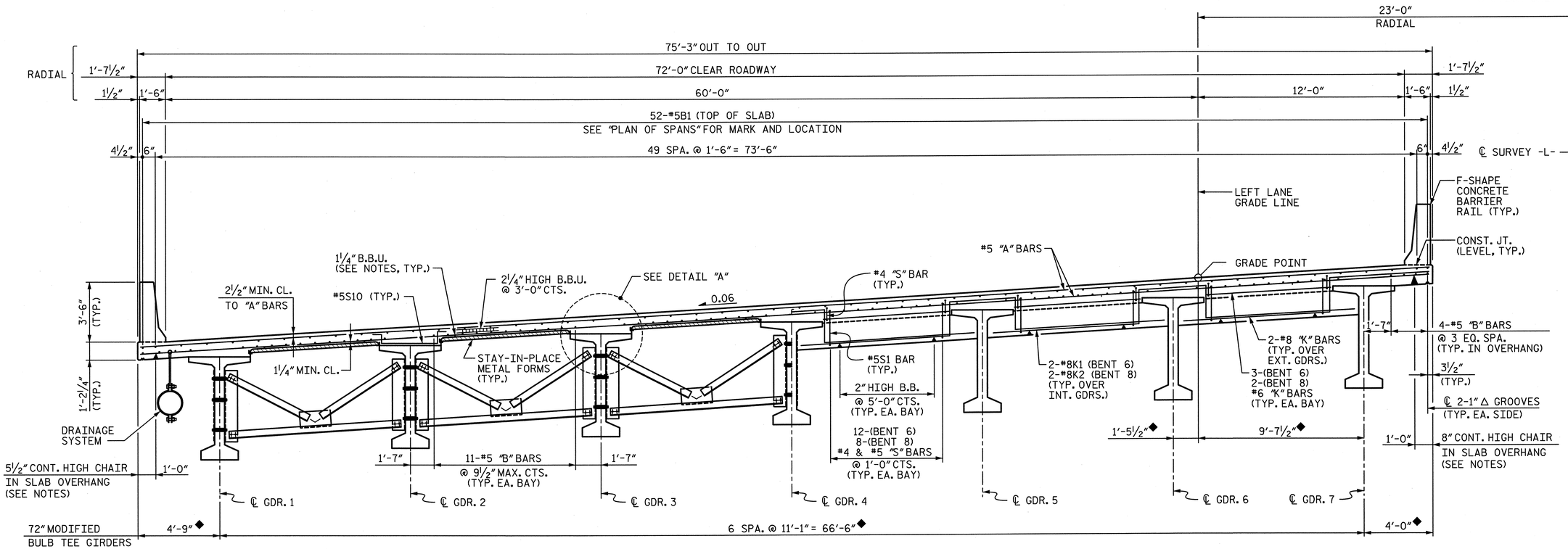

◆ DIMENSIONS SHOWN ARE RADIAL TO CURVES CONCENTRIC WITH ℄ SURVEY -L-. GIRDERS ARE ON CHORDS OF THESE CONCENTRIC CURVES FOR THE SPAN.

TYPICAL SECTION - SPANS 7 & 8

INTERMEDIATE DIAPHRAGMS

END DIAPHRAGMS

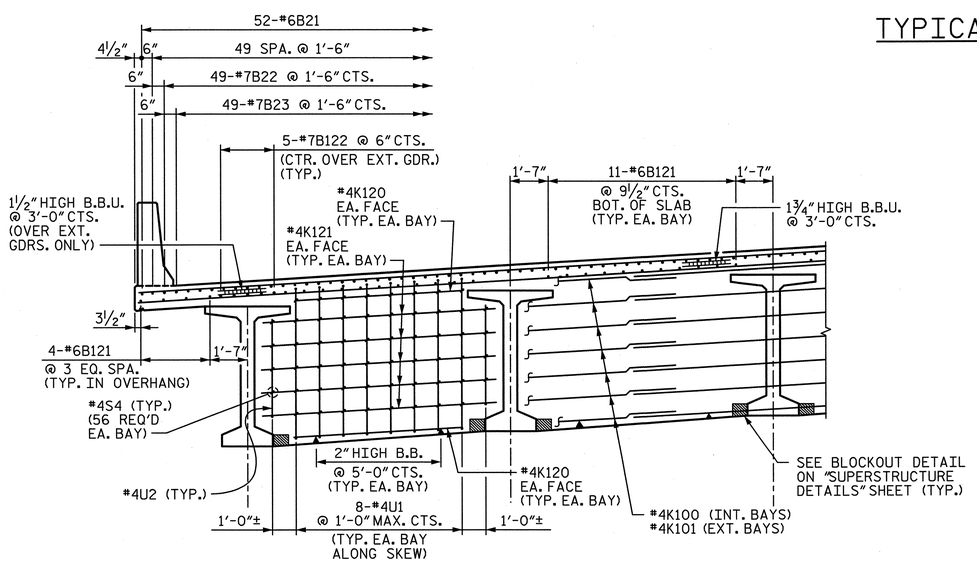

CONTINUOUS DIAPHRAGM

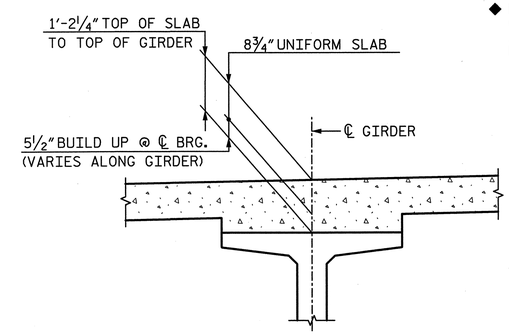

DETAIL "A"

FOR BUILD UP REINFORCING BARS SEE "SUPERSTRUCTURE DETAILS" SHEET 6 OF 6

PROJECT NO. U-2524C

GUILFORD COUNTY

STATION: POT 407+73.35 -L-
= POT 29+32.06 -Y4-

NORTH CAROLINA PROFESSIONAL SEAL 28479 ENGINEER KEVIN G. BAILEY 5-30-13

STATE OF NORTH CAROLINA
DEPARTMENT OF TRANSPORTATION
RALEIGH

TYPICAL SECTION
UNIT C
SPANS 7 & 8

-LEFT LANE-

STV / Ralph Whitehead Associates, Inc.
1000 West Morehead St., Ste. 200
Charlotte, NC 28208
NC License No. F-0991

REVISIONS							
NO.	BY:	DATE:	NO.	BY:	DATE:		
1			3				
2			4				

SHEET NO. S-32
TOTAL SHEETS 836

DRAWN BY : ACA	DATE : 7-12	DESIGN ENGINEER OF RECORD: A. PETER	DATE : 5-13
CHECKED BY : AJP	DATE : 10-12		

5/30/2013 4:49:44 PM R:\station\Finals\Typ Sect. Spans 7 & 8.lt.dgn

NOTES:

1. FOR TYPICAL SECTION NOTES, SEE "TYPICAL SECTION UNIT A SPANS 1 & 2".

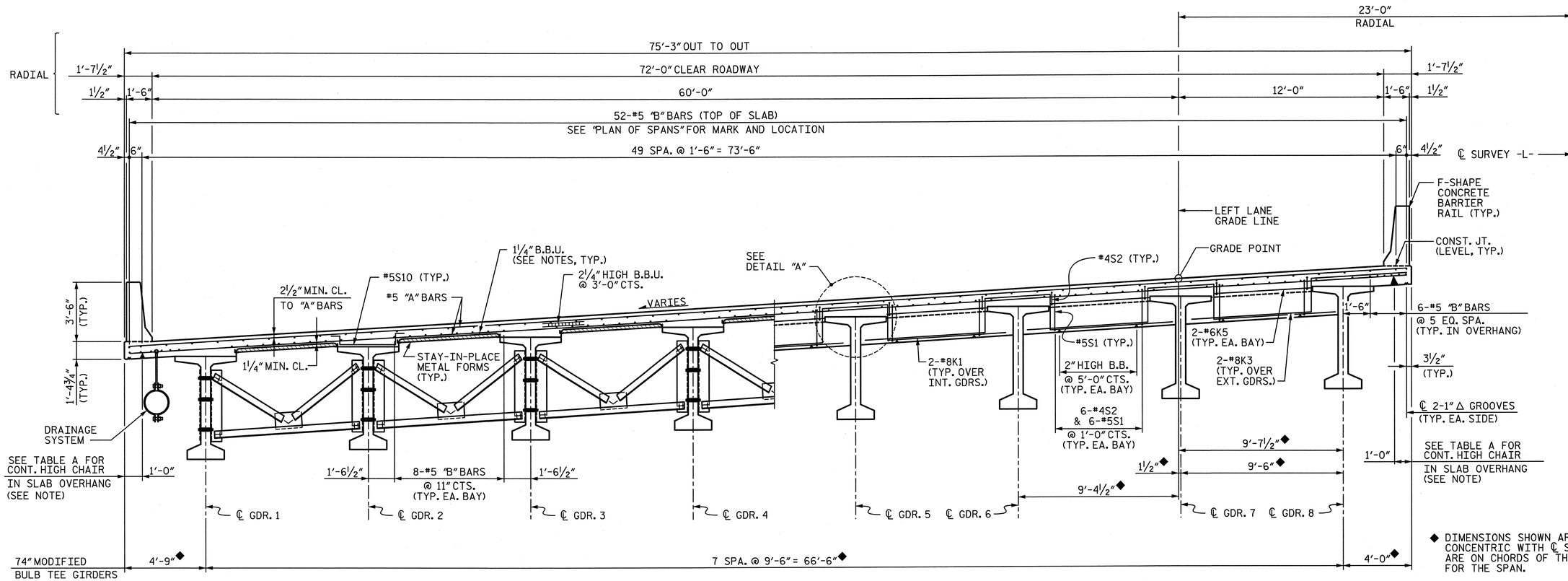

◆ DIMENSIONS SHOWN ARE RADIAL TO CURVES CONCENTRIC WITH ℄ SURVEY -L-. GIRDERS ARE ON CHORDS OF THESE CONCENTRIC CURVES FOR THE SPAN.

TYPICAL SECTION - SPANS 9-11

INTERMEDIATE DIAPHRAGMS

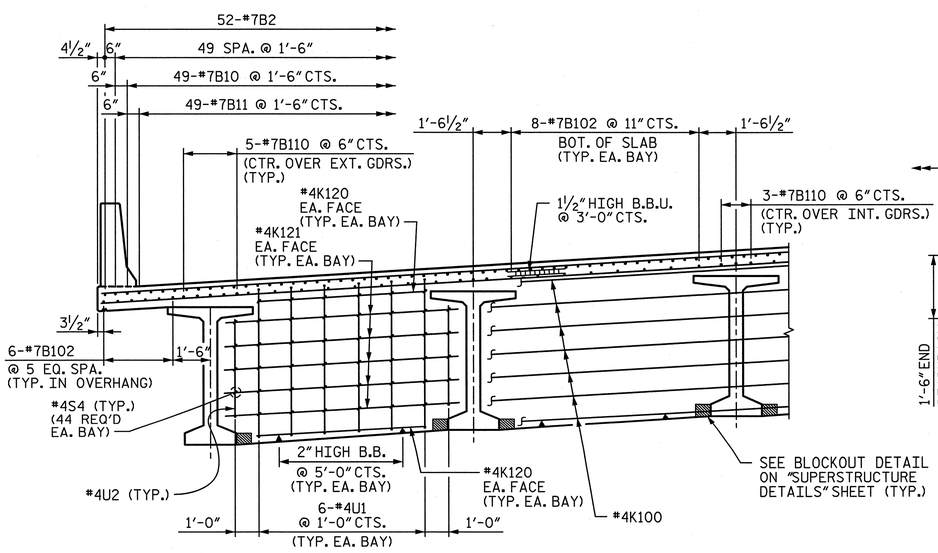

CONTINUOUS DIAPHRAGMS

END DIAPHRAGMS
(BENT 8 SHOWN, BENT 11 SIMILAR)

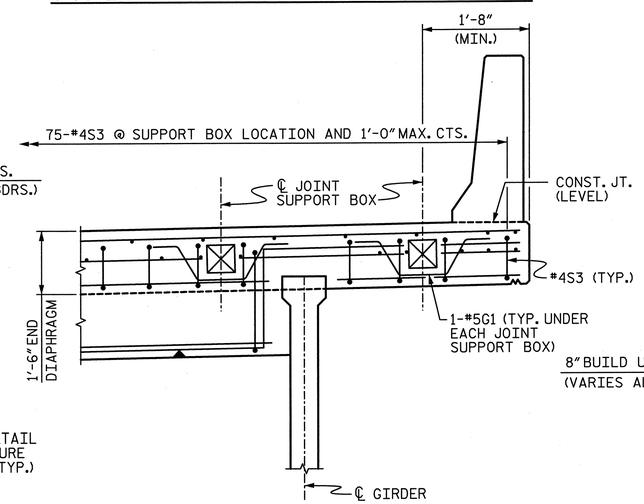

END DIAPHRAGM DETAIL
BENT 11

TABLE A		
BENT	LEFT OVERHANG	RIGHT OVERHANG
8	8"	10½"
9	8"	10½"
10	8¼"	10¼"
11	8¾"	9¾"

NOTE: HEIGHT OF CONTINUOUS HIGH CHAIR IS CALCULATED AT ℄ BENT. CONTRACTOR SHALL ADJUST HEIGHTS, AS NECESSARY TO MAINTAIN PROPER CLEARANCE, DUE TO GIRDER CAMBER OR SUPERELEVATION CHANGE.

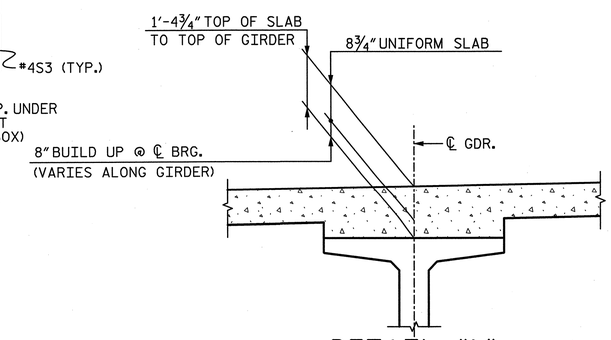

DETAIL "A"
FOR BUILD UP REFORCING BAR DETAILS SEE "SUPERSTRUCTURE DETAILS" SHEET 6 OF 6

NORTH CAROLINA PROFESSIONAL SEAL 28479 ENGINEER KEVIN G. BAILEY 5-30-13

PROJECT NO. U-2524C
GUILFORD COUNTY
STATION: POT 407+73.35 -L-
= POT 29+32.06 -Y4-

STATE OF NORTH CAROLINA
DEPARTMENT OF TRANSPORTATION
RALEIGH

TYPICAL SECTION
UNIT D
SPANS 9-11

-LEFT LANE-

STV / Ralph Whitehead Associates, Inc.
1000 West Morehead St., Ste. 200
Charlotte, NC 28208
NC License No. F-0991

REVISIONS							SHEET NO.
NO.	BY:	DATE:	NO.	BY:	DATE:		S-33
1			3				TOTAL SHEETS
2			4				83C

DRAWN BY : ACA	DATE : 11-12	DESIGN ENGINEER OF RECORD: A. PETER	DATE : 5-13
CHECKED BY : AJP	DATE : 11-12		

5/30/2013 4:49:48 PM R:\Ustation\Finals\Typ Sect. Spans 9 thru 11_lt.dgn

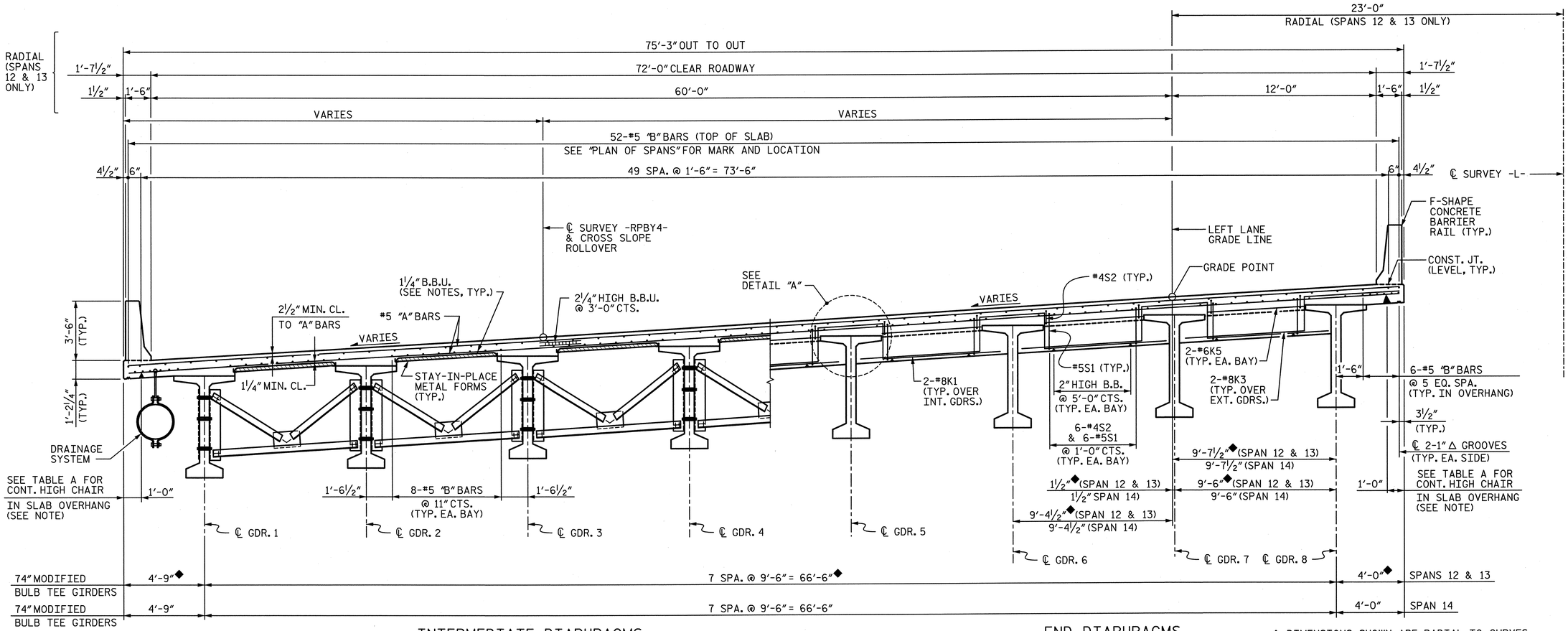

INTERMEDIATE DIAPHRAGMS

END DIAPHRAGMS
(BENT 14 SHOWN, BENT 11 SIMILAR)

NOTES:

1. FOR TYPICAL SECTION NOTES, SEE "TYPICAL SECTION UNIT A SPANS 1 & 2".

◆ DIMENSIONS SHOWN ARE RADIAL TO CURVES CONCENTRIC WITH ℄ SURVEY -L-. GIRDERS ARE ON CHORDS OF THESE CONCENTRIC CURVES FOR THE SPAN.

TYPICAL SECTION - SPANS 12-14

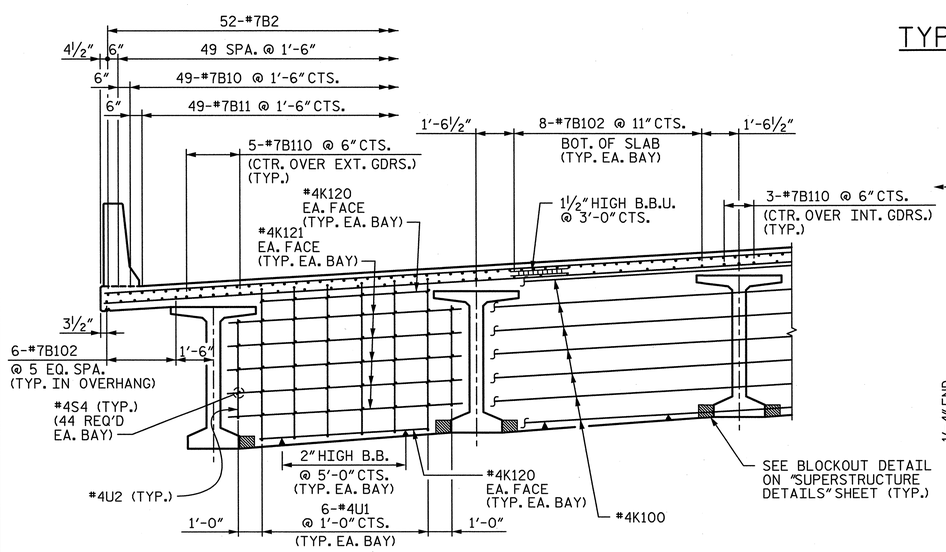

CONTINUOUS DIAPHRAGMS

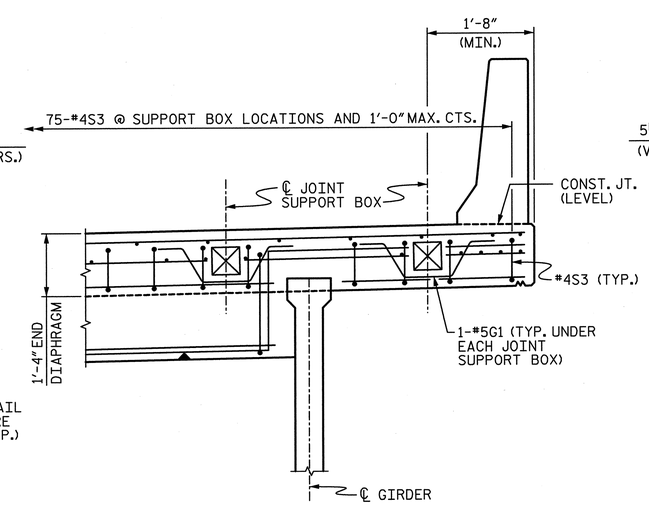

END DIAPHRAGM DETAIL
BENT 11

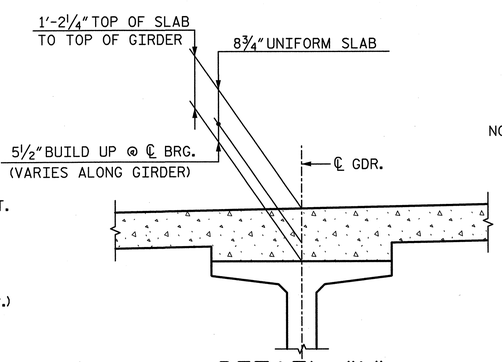

DETAIL "A"

TABLE A		
BENT	LEFT OVERHANG	RIGHT OVERHANG
11	6¼"	7¼"
12	6¼"	7¼"
13	6¼"	7¼"
14	5½"	7¼"

NOTE: HEIGHT OF CONTINUOUS HIGH CHAIR IS CALCULATED AT ℄ BENT. CONTRACTOR SHALL ADJUST HEIGHTS, AS NECESSARY TO MAINTAIN PROPER CLEARANCE, DUE TO GIRDER CAMBER OR SUPERELEVATION CHANGE.

PROJECT NO. U-2524C
GUILFORD COUNTY
STATION: POT 407+73.35 -L-
= POT 29+32.06 -Y4-

NORTH CAROLINA PROFESSIONAL SEAL 28479 ENGINEER KEVIN G. BAILEY 5-30-13

STATE OF NORTH CAROLINA
DEPARTMENT OF TRANSPORTATION
RALEIGH

TYPICAL SECTION
UNIT E
SPANS 12-14

-LEFT LANE-

STV / Ralph Whitehead Associates, Inc.
1000 West Morehead St., Ste. 200
Charlotte, NC 28208
NC License No. F-0991

REVISIONS							
NO.	BY:	DATE:	NO.	BY:	DATE:	SHEET NO. S-34
1			3			TOTAL SHEETS 836
2			4			

DRAWN BY : ACA	DATE : 7-12	DESIGN ENGINEER OF RECORD: A. PETER	DATE : 5-13
CHECKED BY : AJP	DATE : 11-12		

5/30/2013 4:49:52 PM R:\Ustation\Finals\Typ Sect. Spans 12 & 14_lt.dgn

NOTES:

1. FOR TYPICAL SECTION NOTES, SEE "TYPICAL SECTION UNIT A SPANS 1 & 2".
2. FOR ADDITIONAL CROSS SLOPE ROLLOVER INFORMATION, SEE "TRANSITION ZONE DETAILS" SHEETS.
3. CONTRACTOR IS RESPONSIBLE FOR DETERMINING IF REMOVABLE FORMS ARE NECESSARY AND THE EXTENT REQUIRED TO FORM THE DECK. ALL COSTS ASSOCIATED WITH IMPLEMENTING REMOVABLE FORMS SHALL BE CONSIDERED INCIDENTIAL TO "REINFORCED CONCRETE DECK SLAB" AND NO ADDITIONAL PAYMENT SHALL BE MADE.

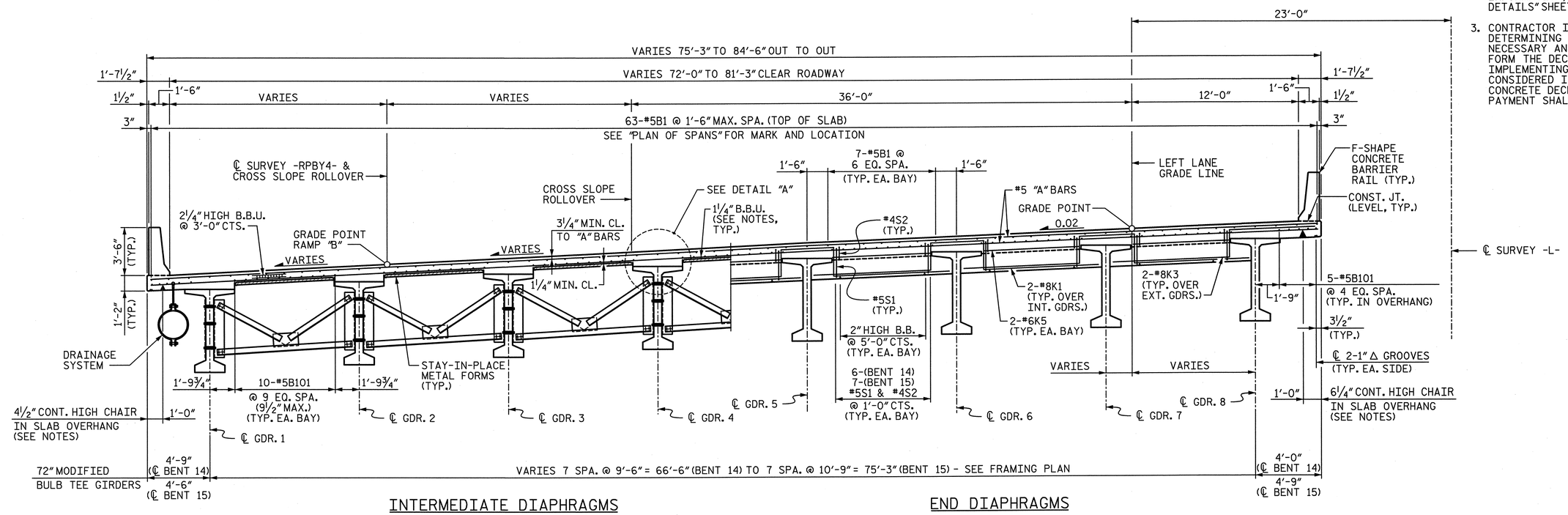

INTERMEDIATE DIAPHRAGMS

END DIAPHRAGMS

TYPICAL SECTION - SPAN 15

AN ADDITIONAL ¾" DECK THICKNESS IS INCLUDED IN SPAN 15 & 16 TO ACCOUNT FOR RIDEABILITY OPERATIONS IN AREAS OF CROSS SLOPE ROLLOVER. ALL COSTS ASSOCIATED WITH EXTRA DECK THICKNESS SHALL BE CONSIDERED INCIDENTAL TO "REINFORCED CONCRETE DECK SLAB" AND NO ADDITIONAL PAYMENT SHALL BE MADE.

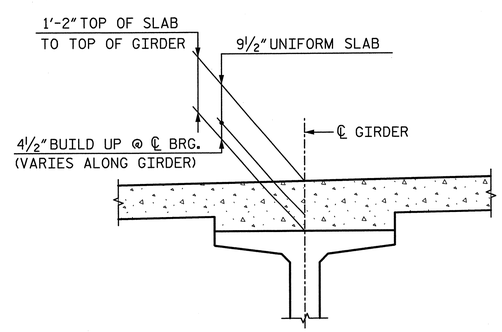

DETAIL "A"

PROJECT NO. U-2524C

GUILFORD COUNTY

STATION: POT 407+73.35 -L-
= POT 29+32.06 -Y4-

STATE OF NORTH CAROLINA
DEPARTMENT OF TRANSPORTATION
RALEIGH

TYPICAL SECTION
SPAN 15

-LEFT LANE-

NORTH CAROLINA PROFESSIONAL SEAL 28479 ENGINEER KEVIN G. BAILEY 5-30-13

STV / Ralph Whitehead Associates, Inc.
1000 West Morehead St., Ste. 200
Charlotte, NC 28208
NC License No. F-0991

REVISIONS								SHEET NO.
NO.	BY:	DATE:	NO.	BY:	DATE:			S-35
1			3					TOTAL SHEETS
2			4					836

DRAWN BY : ACA	DATE : 7-12	DESIGN ENGINEER OF RECORD: A. PETER	DATE : 5-13
CHECKED BY : AJP	DATE : 1-13		

5/30/2013 4:49:57 PM R:\ustation\Finals\Typ Sect. Span 15.dgn

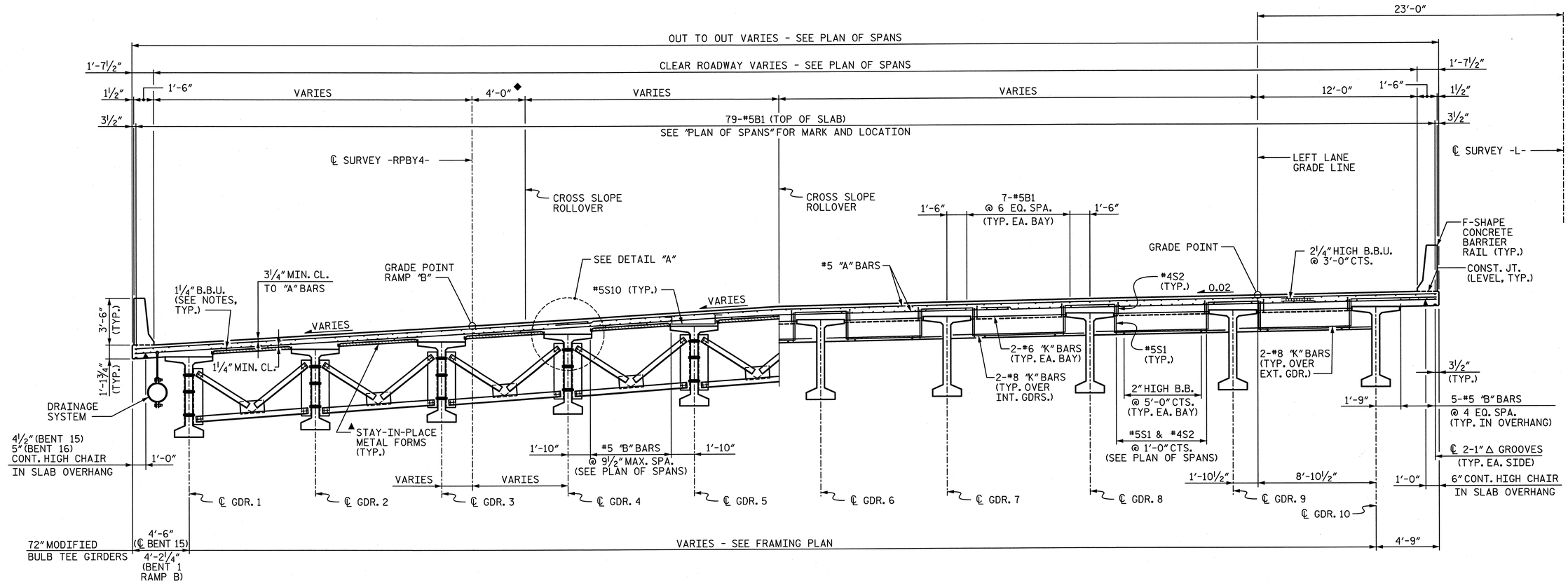

INTERMEDIATE DIAPHRAGMS

END DIAPHRAGMS

TYPICAL SECTION - SPAN 16

AN ADDITIONAL ¾" DECK THICKNESS IS INCLUDED IN SPAN 15 & 16 TO ACCOUNT FOR RIDEABILITY OPERATIONS IN AREAS OF CROSS SLOPE ROLLOVER. ALL COSTS ASSOCIATED WITH EXTRA DECK THICKNESS SHALL BE CONSIDERED INCIDENTAL TO "REINFORCED CONCRETE DECK SLAB" AND NO ADDITIONAL PAYMENT SHALL BE MADE.

◆ DIMENSIONS SHOWN ARE RADIAL TO ℄ SURVEY -RPBY4-.

▲ REMOVABLE FORMS MAY BE REQUIRED DUE TO THE TRANSITION ZONE. (SEE NOTES)

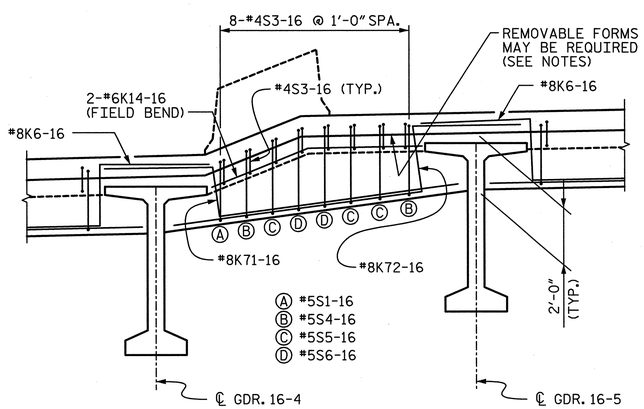

TRANSITION ZONE END DIAPHRAGM

SECTION ALONG DIAPHRAGM @ BENT 16

NOTES:

1. FOR TYPICAL SECTION NOTES, SEE "TYPICAL SECTION UNIT A SPANS 1 & 2".
2. FOR ADDITIONAL CROSS SLOPE ROLLOVER INFORMATION, SEE "TRANSITION ZONE DETAILS" SHEETS.
3. CONTRACTOR IS RESPONSIBLE FOR DETERMINING IF REMOVABLE FORMS ARE NECESSARY AND THE EXTENT REQUIRED TO FORM THE DECK. ALL COSTS ASSOCIATED WITH IMPLEMENTING REMOVABLE FORMS SHALL BE CONSIDERED INCIDENTAL TO "REINFORCED CONCRETE DECK SLAB" AND NO ADDITIONAL PAYMENT SHALL BE MADE.
4. WHEN USING REMOVABLE FORMS, PROVIDE CONTINUOUS HIGH CHAIRS FOR METAL DECK (C.H.C.M.) @ 4'-0" CTS. WITH A HEIGHT TO SUPPORT THE BOTTOM MAT OF "A" BARS A CLEAR DISTANCE OF 2½" ABOVE THE TOP OF REMOVABLE FORM.

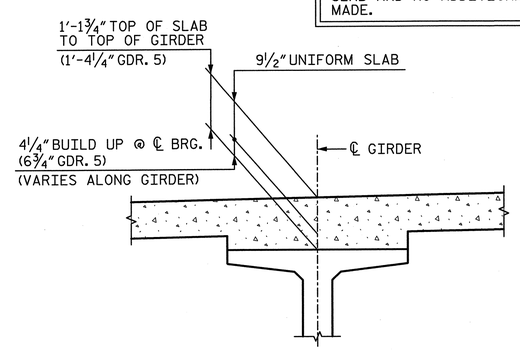

DETAIL "A"

FOR BUILD UP REINFORCING BARS SEE "SUPERSTRUCTURE DETAILS" SHEET 6 OF 6

NORTH CAROLINA PROFESSIONAL SEAL 28479 ENGINEER KEVIN G. BAILEY 5-30-13

PROJECT NO. U-2524C

GUILFORD COUNTY

STATION: POT 407+73.35 -L-
= POT 29+32.06 -Y4-

STATE OF NORTH CAROLINA
DEPARTMENT OF TRANSPORTATION
RALEIGH

TYPICAL SECTION
SPAN 16

-LEFT LANE-

DRAWN BY : ACA	DATE : 12-12	DESIGN ENGINEER OF RECORD: A. PETER	DATE : 5-13
CHECKED BY : AJP	DATE : 1-13		

STV / Ralph Whitehead Associates, Inc.
1000 West Morehead St., Ste. 200
Charlotte, NC 28208
NC License No. F-0991

REVISIONS								SHEET NO.
NO.	BY:	DATE:	NO.	BY:	DATE:			S-36
1			3					TOTAL SHEETS
2			4					836

R:\station\Finals\Typ Sect. Span 16_lt.dgn 4:50:01 PM 5/30/2013

NOTES:

1. FOR TYPICAL SECTION NOTES, SEE "TYPICAL SECTION UNIT A SPANS 1 & 2".

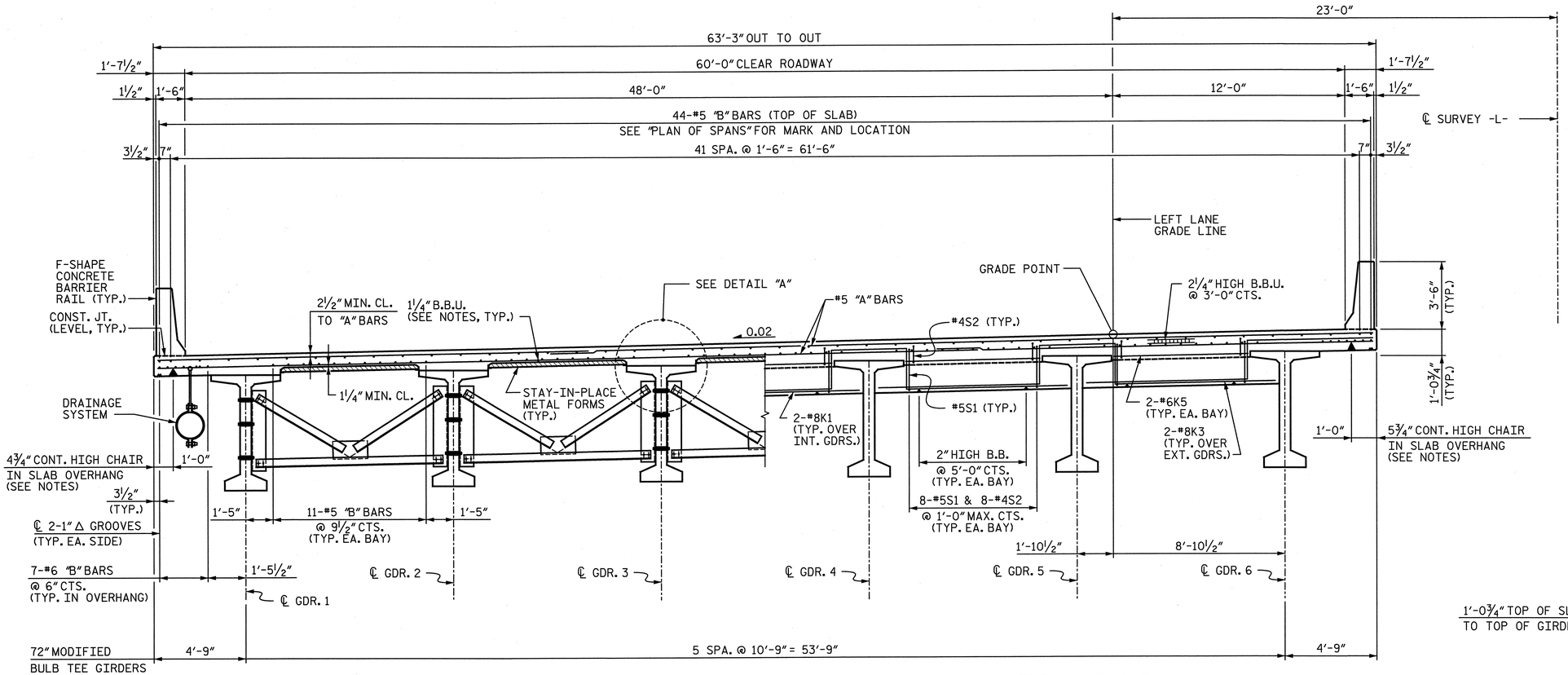

TYPICAL SECTION - SPANS 17-20

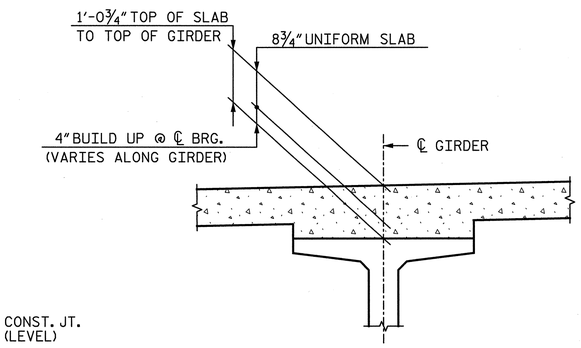

DETAIL "A"

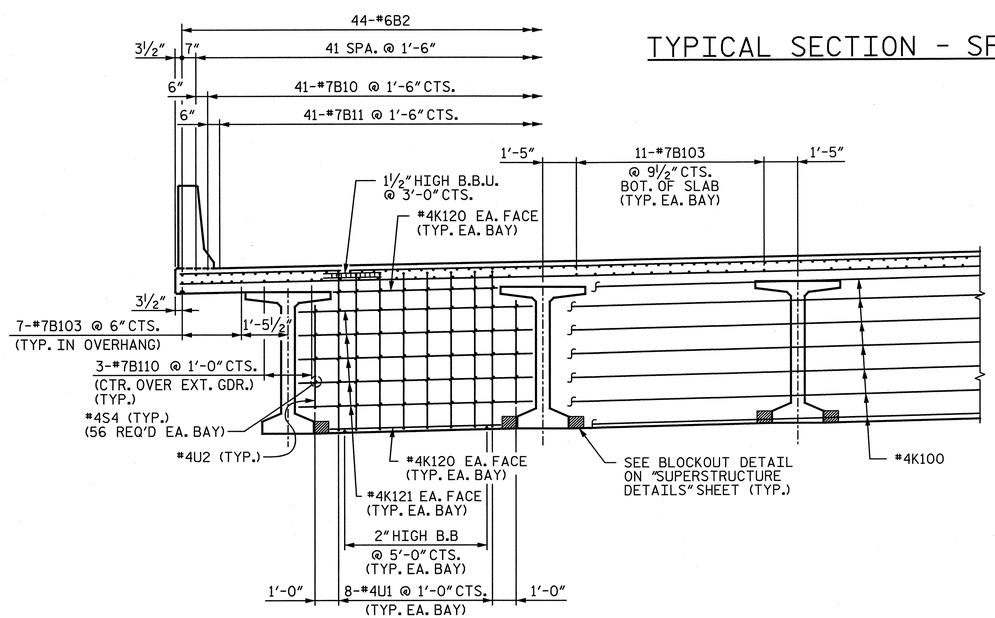

CONTINUOUS DIAPHRAGMS

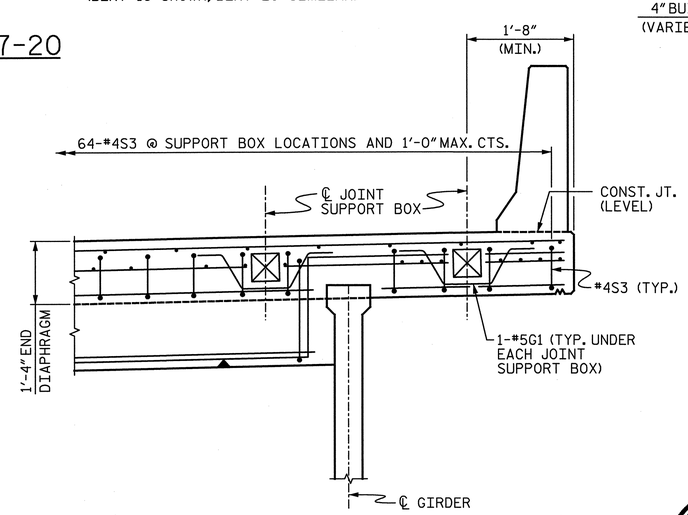

END DIAPHRAGM DETAIL

BENT 20

INTERMEDIATE DIAPHRAGMS

END DIAPHRAGM

(BENT 16 SHOWN, BENT 20 SIMILAR)

PROJECT NO. U-2524C

GUILFORD COUNTY

STATION: POT 407+73.35 -L-
= POT 29+32.06 -Y4-

STATE OF NORTH CAROLINA
DEPARTMENT OF TRANSPORTATION
RALEIGH

TYPICAL SECTION
UNIT F
SPANS 17-20

-LEFT LANE-

NORTH CAROLINA PROFESSIONAL SEAL 28479 ENGINEER KEVIN G. BAILEY 5-30-13

STV / Ralph Whitehead Associates, Inc.
1000 West Morehead St., Ste. 200
Charlotte, NC 28208
NC License No. F-0991

REVISIONS								SHEET NO.
NO.	BY:	DATE:	NO.	BY:	DATE:			S-37
1			3					TOTAL SHEETS
2			4					836

DRAWN BY : VMW	DATE : 7-12	DESIGN ENGINEER OF RECORD: A. PETER	DATE : 5-13
CHECKED BY : AJP	DATE : 8-12		

5/30/2013 6:44:48 PM R:\ustation\Finals\Typ Sect. Spans 17 thru 20_lt.dgn

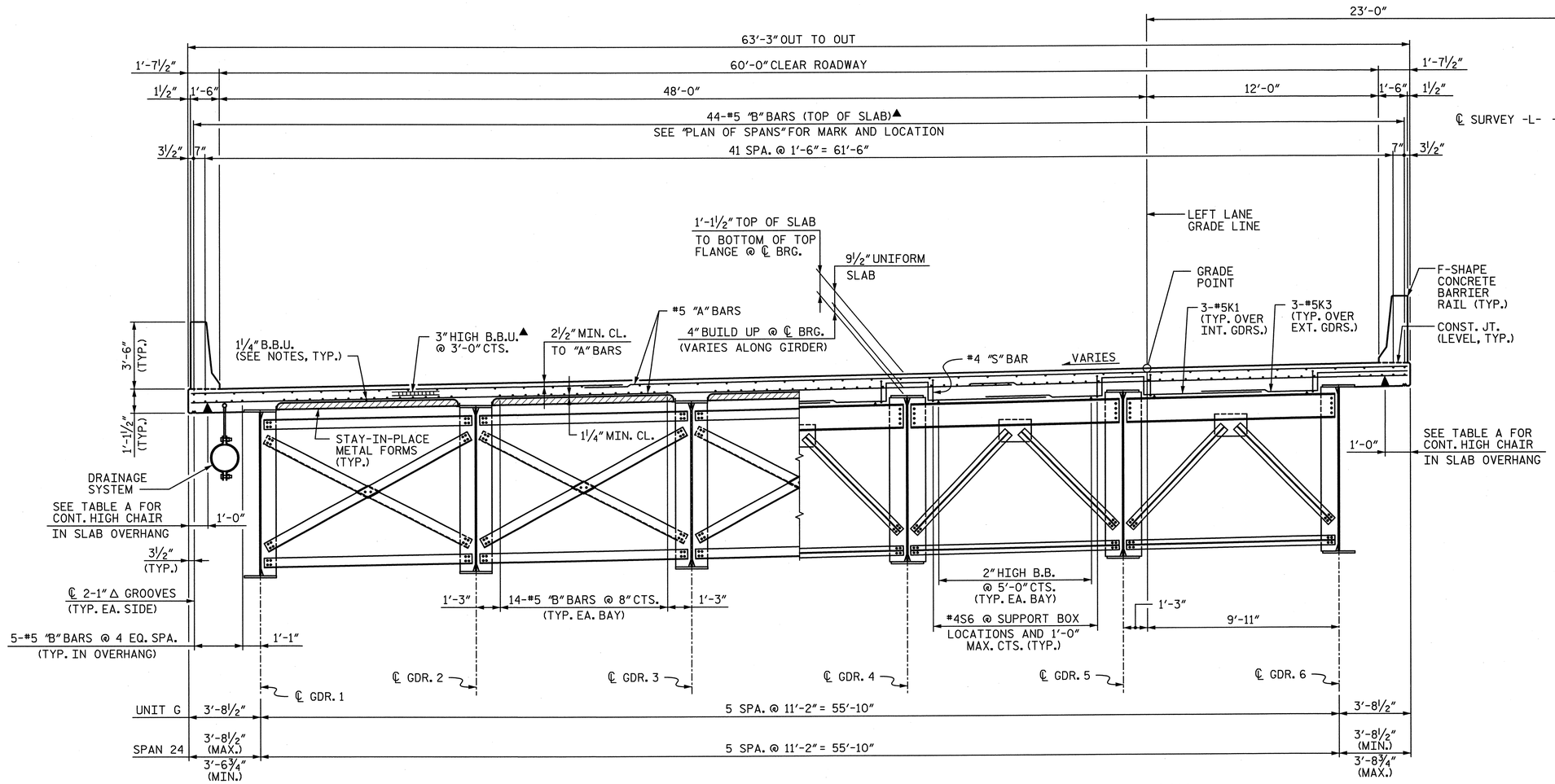

INTERMEDIATE DIAPHRAGMS

END DIAPHRAGM
BENT 20 SHOWN, BENT 23 & 24 SIMILAR

TYPICAL SECTION - SPANS 21-24

NOTES:

1. FOR TYPICAL SECTION NOTES, SEE "TYPICAL SECTION SPAN 6".

▲ FOR TOP "B" BARS AND B.B.U. OVER BENTS, SEE "TOP "B" BAR PLACEMENT DETAIL" ON "PLAN OF SPANS - UNIT G" SHEET 1 OF 3.

TABLE A		
BENT	LEFT OVERHANG	RIGHT OVERHANG
20	5"	5½"
21	5"	5½"
22	5"	5½"
23	5"	5½"
24	5½"	5"

NOTE: HEIGHT OF CONTINUOUS HIGH CHAIR IS CALCULATED AT ℄ BENT. CONTRACTOR SHALL ADJUST HEIGHTS, AS NECESSARY TO MAINTAIN PROPER CLEARANCE, DUE TO GIRDER CAMBER AND/OR SUPERELEVATION CHANGE.

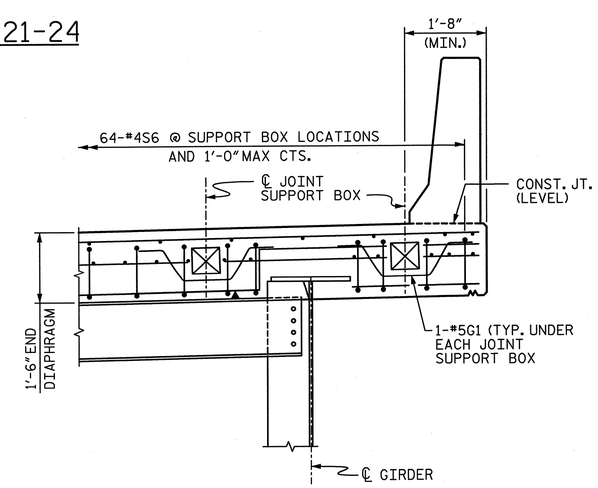

END DIAPHRAGM DETAIL
BENT 20 & 23

PROJECT NO. U-2524C
GUILFORD COUNTY
STATION: POT 407+73.35 -L-
= POT 29+32.06 -Y4-

STATE OF NORTH CAROLINA
DEPARTMENT OF TRANSPORTATION
RALEIGH

TYPICAL SECTION
UNIT G & SPAN 24
SPANS 21-24

-LEFT LANE-

NORTH CAROLINA PROFESSIONAL SEAL 28479 ENGINEER KEVIN G. BAILEY 5-30-13

STV / Ralph Whitehead Associates, Inc.
1000 West Morehead St., Ste. 200
Charlotte, NC 28208
NC License No. F-0991

REVISIONS							
NO.	BY:	DATE:	NO.	BY:	DATE:	SHEET NO. S-38
1			3			TOTAL SHEETS 836
2			4			

DRAWN BY : VMW	DATE : 7-12	DESIGN ENGINEER OF RECORD: A. PETER	DATE : 5-13
CHECKED BY : AJP	DATE : 9-12		

5/30/2013 4:50:10 PM R:\ustation\Finals\Typ Sect. Spans 21thru 24_lt.dgn

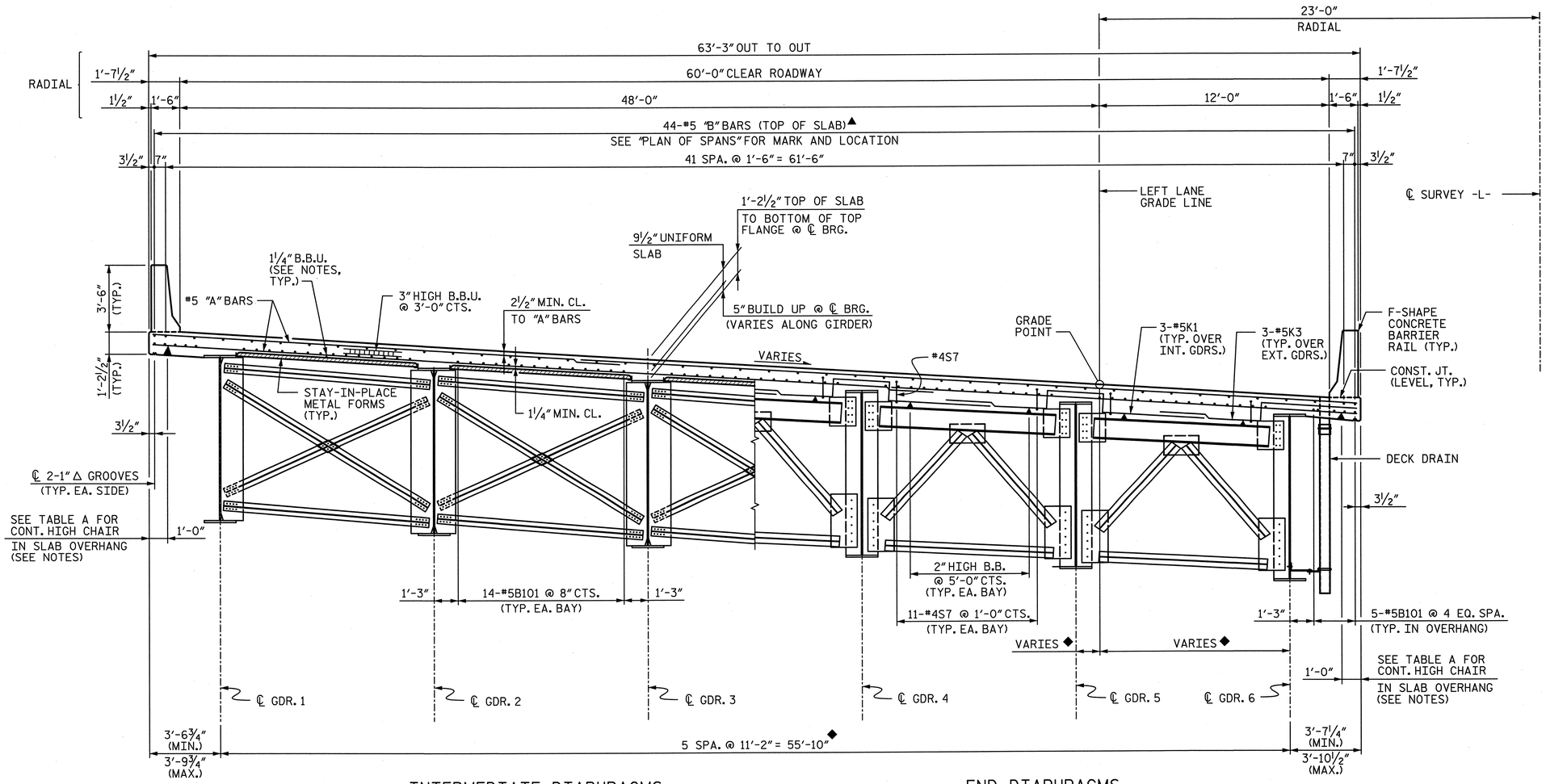

INTERMEDIATE DIAPHRAGMS

END DIAPHRAGMS
BENT 24 SHOWN, BENT 26 SIMILAR

TYPICAL SECTION - SPANS 25 & 26

NOTES:

1. FOR TYPICAL SECTION NOTES, SEE "TYPICAL SECTION SPAN 6".

TABLE A		
BENT	LEFT OVERHANG	RIGHT OVERHANG
24	6½"	6"
25	7¼"	5½"
26	7¼"	5¼"

◆ SEE FRAMING PLAN

▲ FOR TOP "B" BARS OVER BENT, SEE "TOP "B" BAR PLACEMENT DETAIL" ON "PLAN OF SPANS - UNIT H" SHEET 1 OF 3.

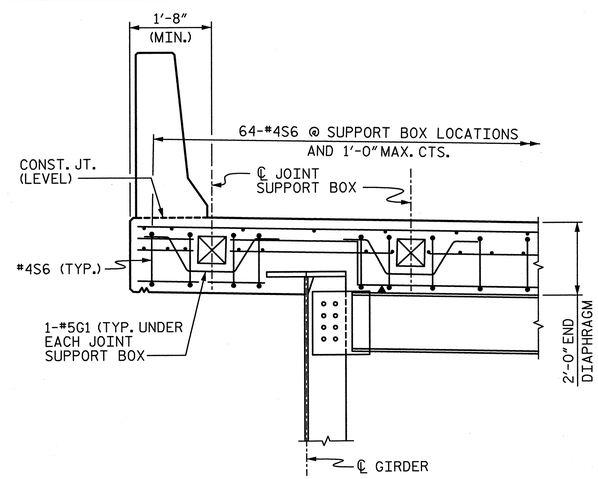

END DIAPHRAGM DETAIL
BENT 26

PROJECT NO. U-2524C
GUILFORD COUNTY
STATION: POT 407+73.35 -L-
= POT 29+32.06 -Y4-

STATE OF NORTH CAROLINA
DEPARTMENT OF TRANSPORTATION
RALEIGH

TYPICAL SECTION
UNIT H
SPANS 25 & 26

-LEFT LANE-

NORTH CAROLINA PROFESSIONAL SEAL 28479 ENGINEER KEVIN G. BAILEY
5-30-13

DRAWN BY : VMW/ACA	DATE : 7-12	DESIGN ENGINEER OF RECORD: A. PETER	DATE : 5-13
CHECKED BY : AJP	DATE : 2-13		

STV/ Ralph Whitehead Associates, Inc.
1000 West Morehead St., Ste. 200
Charlotte, NC 28208
NC License No. F-0991

REVISIONS								SHEET NO.
NO.	BY:	DATE:	NO.	BY:	DATE:			S-39
1			3					TOTAL SHEETS
2			4					836

5/30/2013 4:50:15 PM R:\Station\Finals\Typ Sect. Spans 25 & 26_lt.dgn

NOTES:

1. FOR TYPICAL SECTION NOTES, SEE "TYPICAL SECTION UNIT A SPANS 1 & 2"

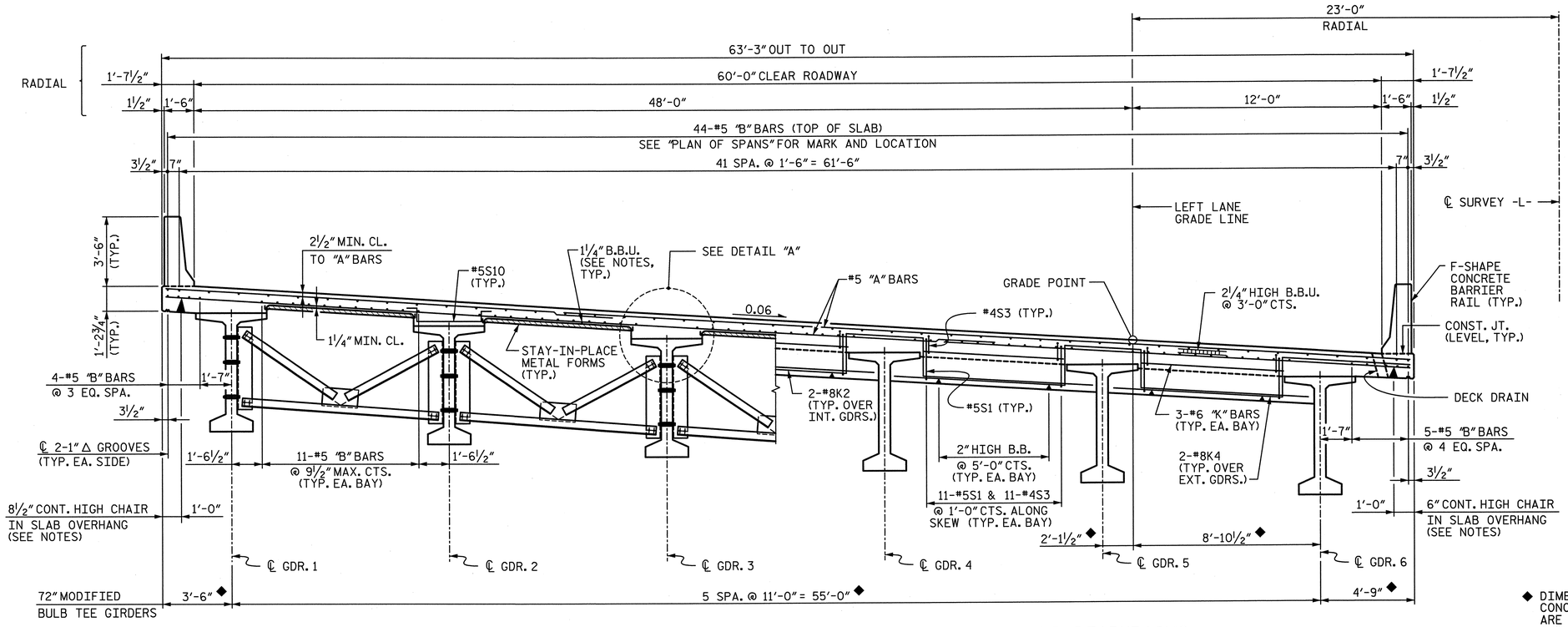

◆ DIMENSIONS SHOWN ARE RADIAL TO CURVES CONCENTRIC WITH ℄ SURVEY -L-. GIRDERS ARE ON CHORDS OF THESE CONCENTRIC CURVES FOR THE SPAN.

INTERMEDIATE DIAPHRAGMS

END DIAPHRAGMS
(END BENT 2 SHOWN, BENT 26 SIMILAR)

TYPICAL SECTION - SPANS 27-30

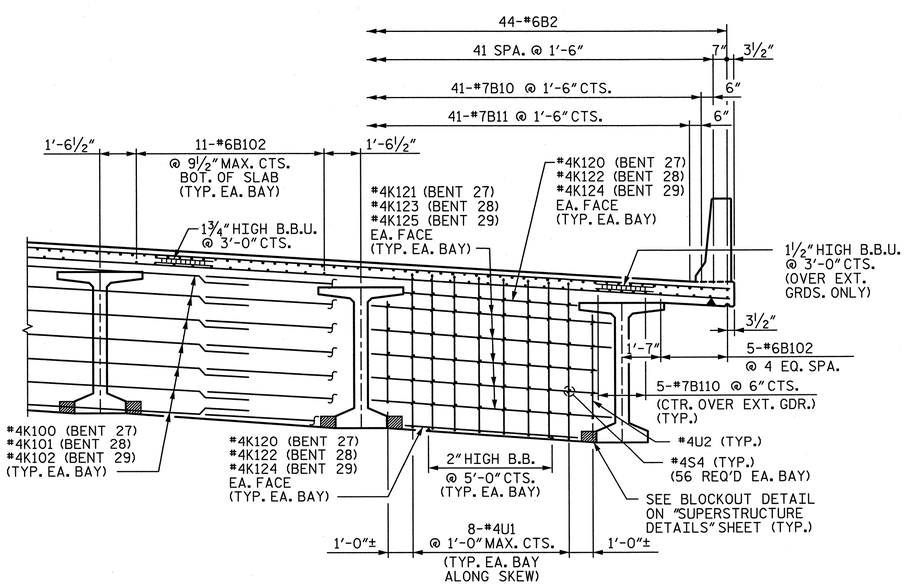

CONTINUOUS DIAPHRAGMS

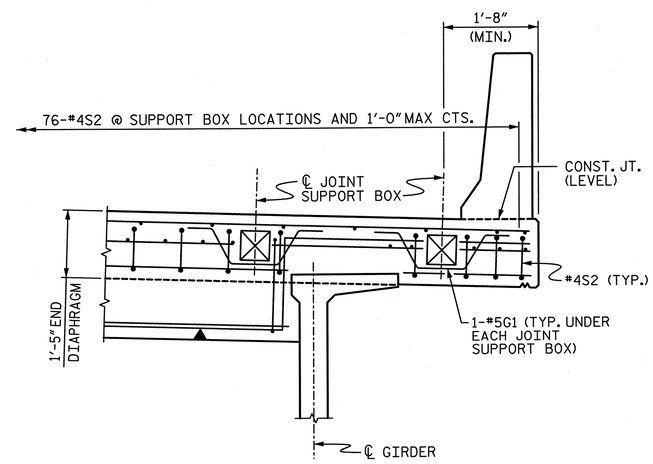

END DIAPHRAGM DETAIL
BENT 26

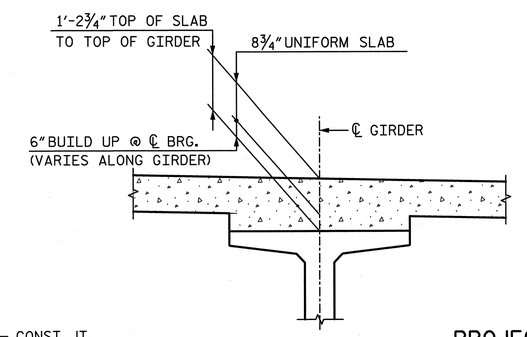

DETAIL "A"

FOR BUILD UP REINFORCING BARS, SEE "SUPERSTRUCTURE DETAILS" SHEET 6 OF 6

PROJECT NO. U-2524C
GUILFORD COUNTY
STATION: POT 407+73.35 -L-
= POT 29+32.06 -Y4-

NORTH CAROLINA PROFESSIONAL SEAL 28479 ENGINEER KEVIN G. BAILEY 5-30-13

STATE OF NORTH CAROLINA
DEPARTMENT OF TRANSPORTATION
RALEIGH

TYPICAL SECTION
UNIT I
SPANS 27-30

-LEFT LANE-

DRAWN BY : VMW	DATE : 7-12	DESIGN ENGINEER OF RECORD: A. PETER	DATE : 5-13
CHECKED BY : AJP	DATE : 8-12		

STV / Ralph Whitehead Associates, Inc.
1000 West Morehead St., Ste. 200
Charlotte, NC 28208
NC License No. F-0991

REVISIONS						SHEET NO.
NO.	BY:	DATE:	NO.	BY:	DATE:	S-40
1			3			TOTAL SHEETS
2			4			836

5/30/2013 4:50:19 PM R:\ustation\Finals\Typ Sect. Spans 27 thru 30_lt.dgn

NOTES:

1. FOR BEAM BOLSTER UPPER HEIGHT, SEE CORRESPONDING "TYPICAL SECTION" SHEET.

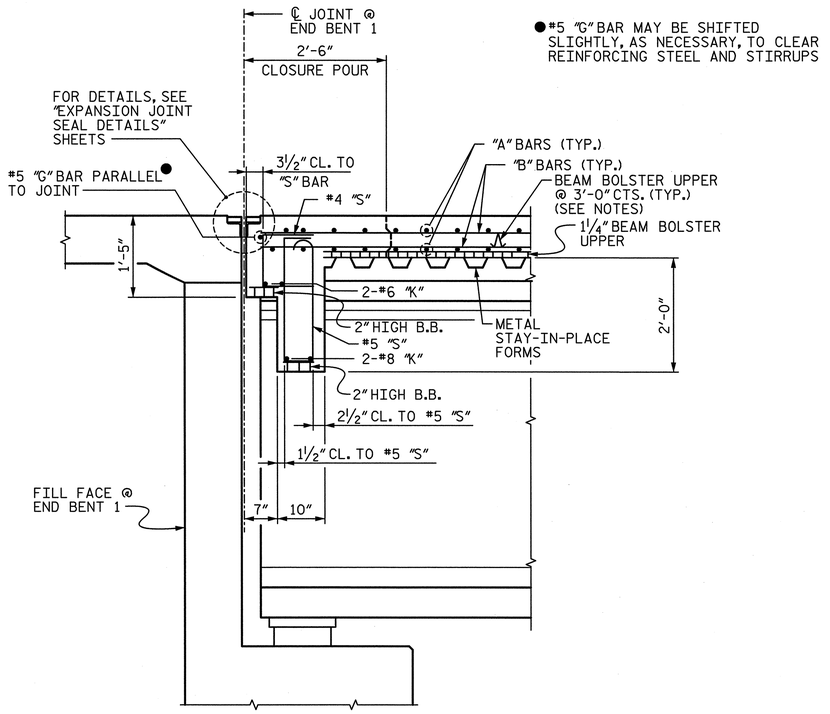

SECTION A-A

END DIAPHRAGM AT END BENT 1
("J" BAR USED WITH STANDARD EXP. JT. NOT SHOWN)

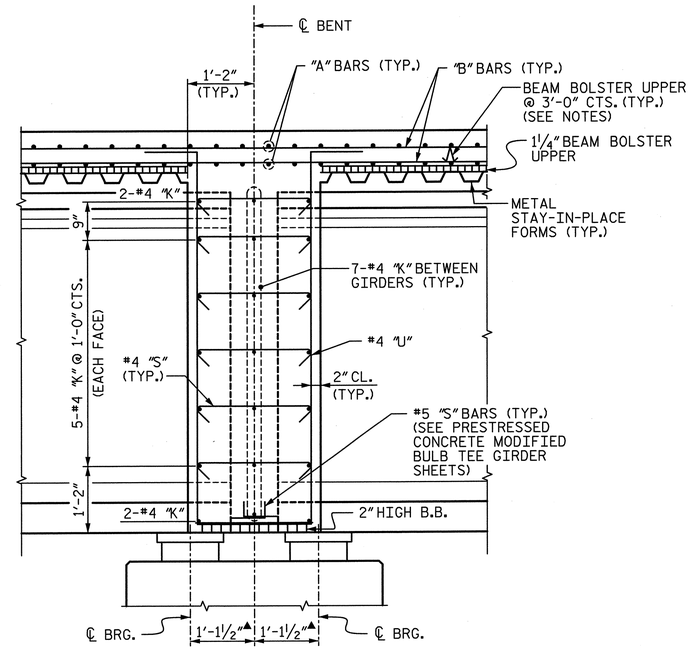

SECTION B-B

CONT. DIAPHRAGMS AT BENTS 1, 3, 9, 10, 12, 13 & 17-19

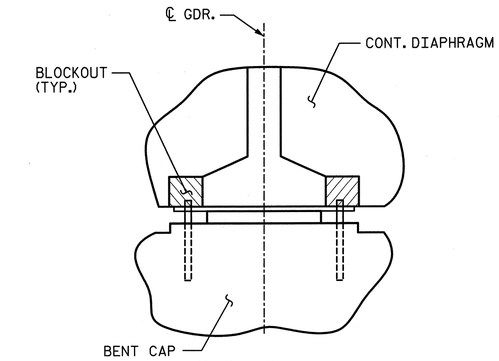

SECTION X-X

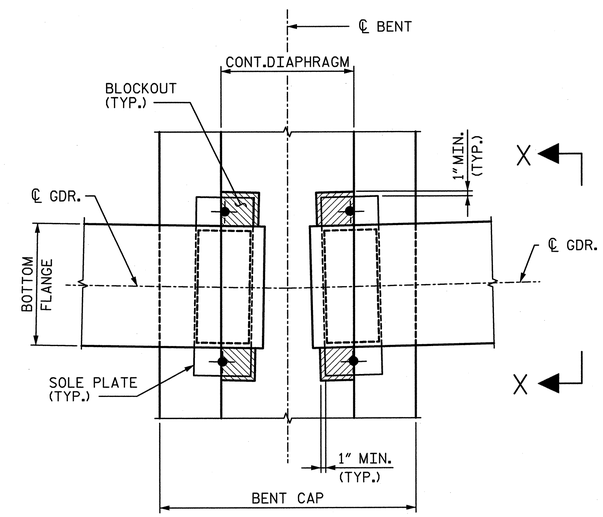

PLAN

CONT. DIAPHRAGM BLOCKOUT DETAILS

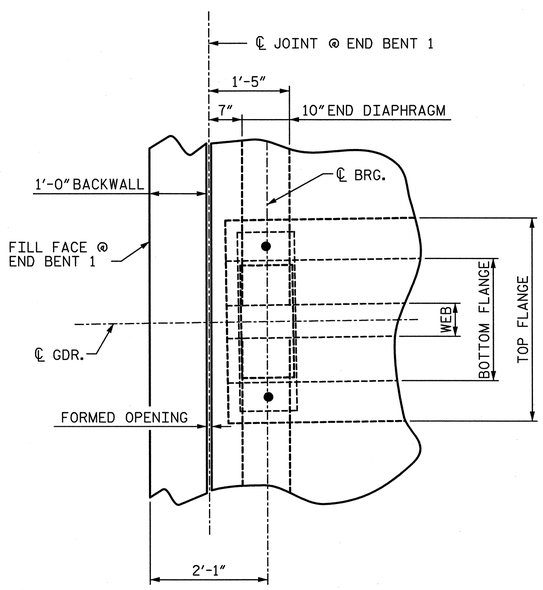

PLAN

(BENT CAP NOT SHOWN FOR CLARITY)

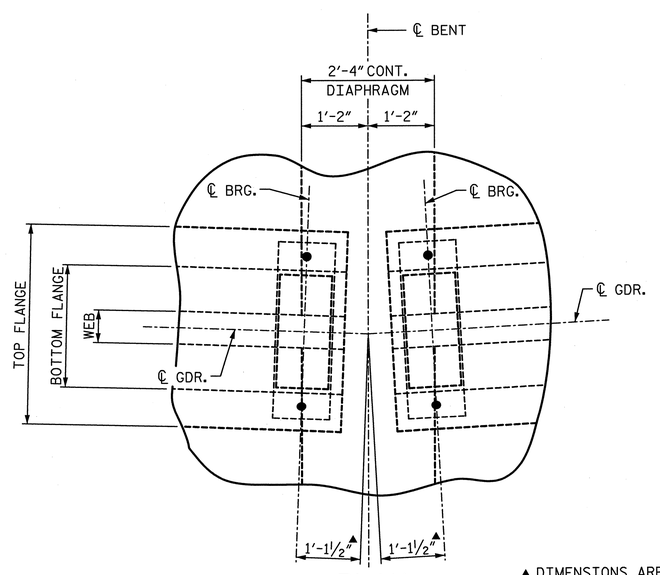

PLAN

(BENT CAP NOT SHOWN FOR CLARITY)

▲ DIMENSIONS ARE MEASURED ALONG ℄ GIRDER.

PROJECT NO. U-2524C

GUILFORD COUNTY

STATION: POT 407+73.35 -L-
= POT 29+32.06 -Y4-

SHEET 1 OF 6

STATE OF NORTH CAROLINA
DEPARTMENT OF TRANSPORTATION
RALEIGH

SUPERSTRUCTURE DETAILS

-LEFT LANE-

NORTH CAROLINA PROFESSIONAL SEAL 28479 ENGINEER KEVIN G. BAILEY 5-30-13

STV/ Ralph Whitehead Associates, Inc.
1000 West Morehead St., Ste. 200
Charlotte, NC 28208
NC License No. F-0991

REVISIONS							SHEET NO.
NO.	BY:	DATE:	NO.	BY:	DATE:		S-41
1			3				TOTAL SHEETS
2			4				836

DRAWN BY : VMW/ACA	DATE : 7-12	DESIGN ENGINEER OF RECORD: A. PETER	DATE : 5-13
CHECKED BY : AJP	DATE : 2-13		

5/30/2013 4:50:24 PM R:\ustation\Finals\Sup. Sect. Details Sheet 1 of 6.dgn

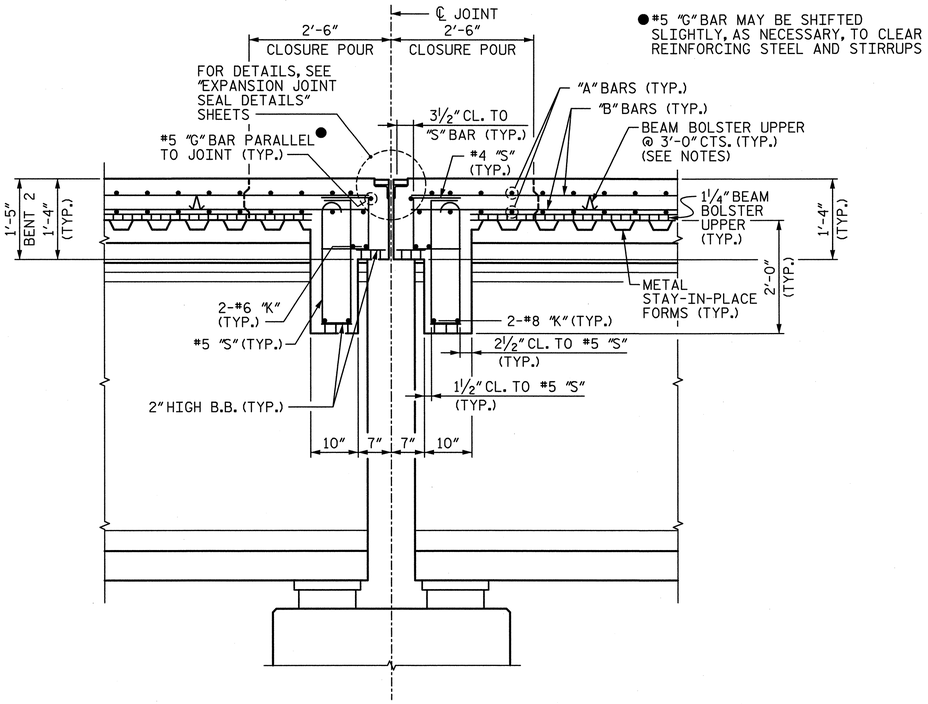

SECTION C-C

END DIAPHRAGMS AT EXPANSION BENTS 2, 14-16
("J" BAR USED WITH STANDARD EXP. JT. NOT SHOWN)

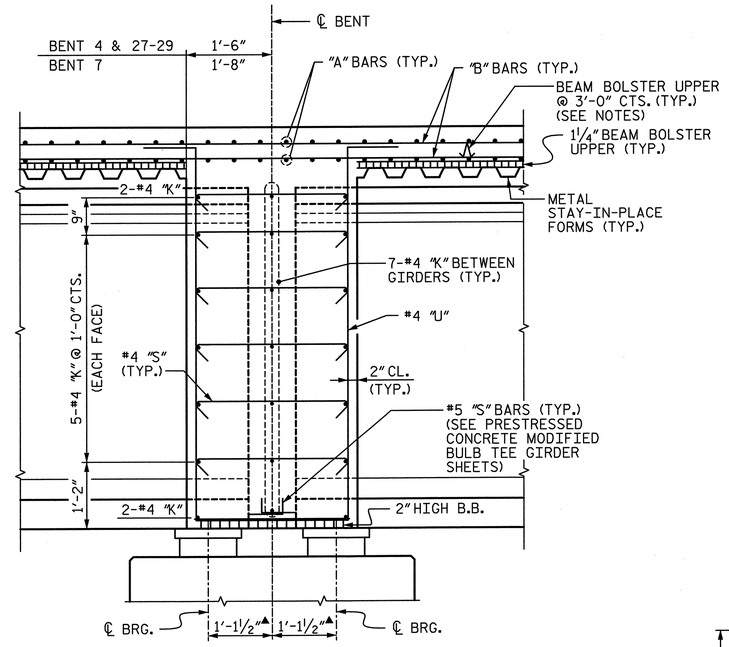

SECTION D-D

CONT. DIAPHRAGMS AT BENTS 4, 7 & 27-29

NOTES:

1. FOR BEAM BOLSTER UPPER HEIGHT, SEE CORRESPONDING "TYPICAL SECTION" SHEET.

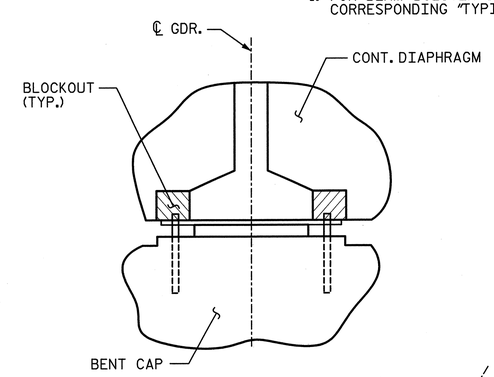

SECTION Y-Y

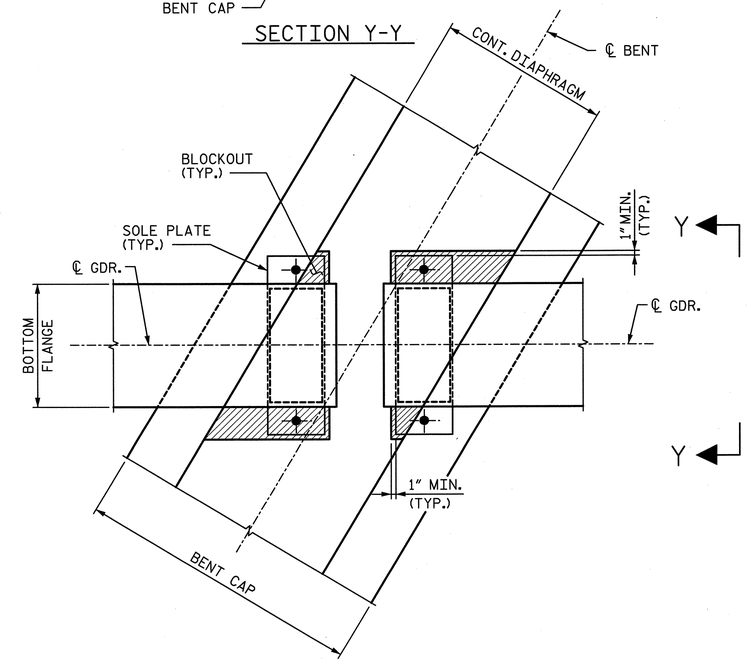

PLAN

CONT. DIAPHRAGM BLOCKOUT DETAILS

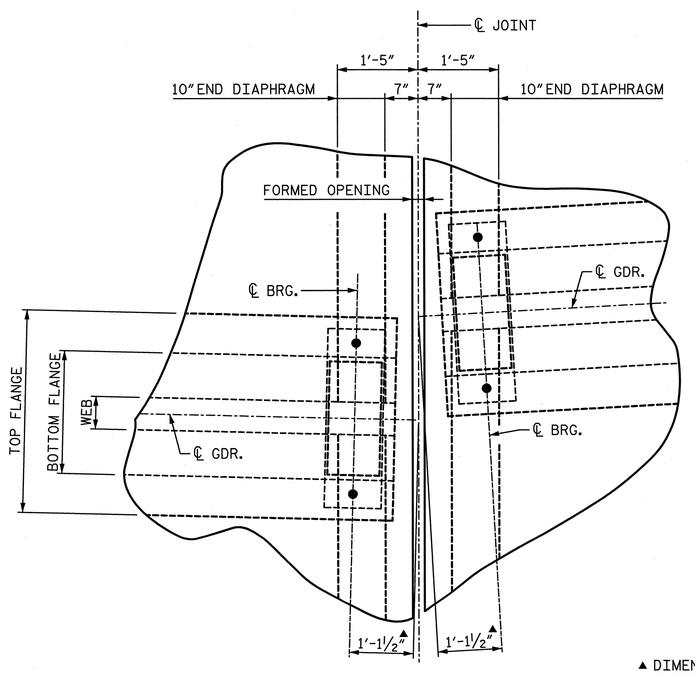

PLAN

(BENT CAP NOT SHOWN FOR CLARITY)

▲ DIMENSIONS ARE MEASURED ALONG ℄ GIRDER.

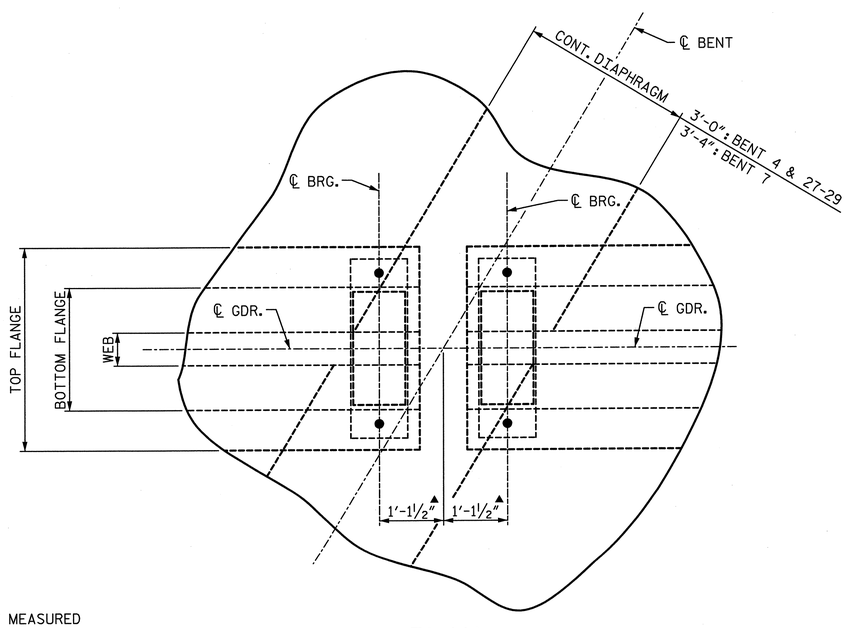

PLAN

(BENT CAP NOT SHOWN FOR CLARITY)

PROJECT NO. U-2524C
GUILFORD COUNTY
STATION: POT 407+73.35 -L-
= POT 29+32.06 -Y4-

SHEET 2 OF 6

NORTH CAROLINA PROFESSIONAL SEAL 28479 ENGINEER KEVIN G. BAILEY
5-30-13

STATE OF NORTH CAROLINA
DEPARTMENT OF TRANSPORTATION
RALEIGH

SUPERSTRUCTURE DETAILS

-LEFT LANE-

REVISIONS						SHEET NO.
NO.	BY:	DATE:	NO.	BY:	DATE:	S-42
1			3			TOTAL SHEETS
2			4			836

STV / Ralph Whitehead Associates, Inc.
1000 West Morehead St., Ste. 200
Charlotte, NC 28208
NC License No. F-0991

DRAWN BY : VMW/ACA	DATE : 7-12	DESIGN ENGINEER OF RECORD: A. PETER	DATE : 5-13
CHECKED BY : AJP	DATE : 2-13		

5/30/2013 4:50:29 PM R:\ustation\Finals\Sup. Sect. Details Sheet 2 of 6.dgn

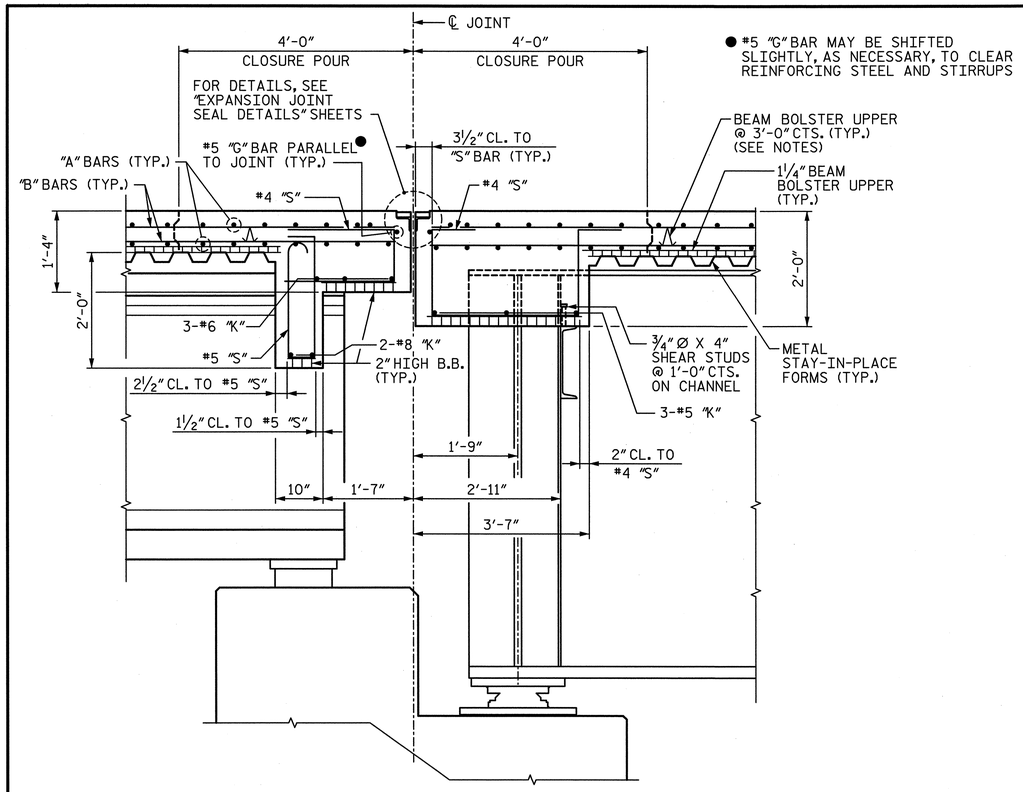

SECTION E-E

END DIAPHRAGMS AT BENT 5
("J" BAR USED WITH STANDARD EXP. JT. NOT SHOWN)

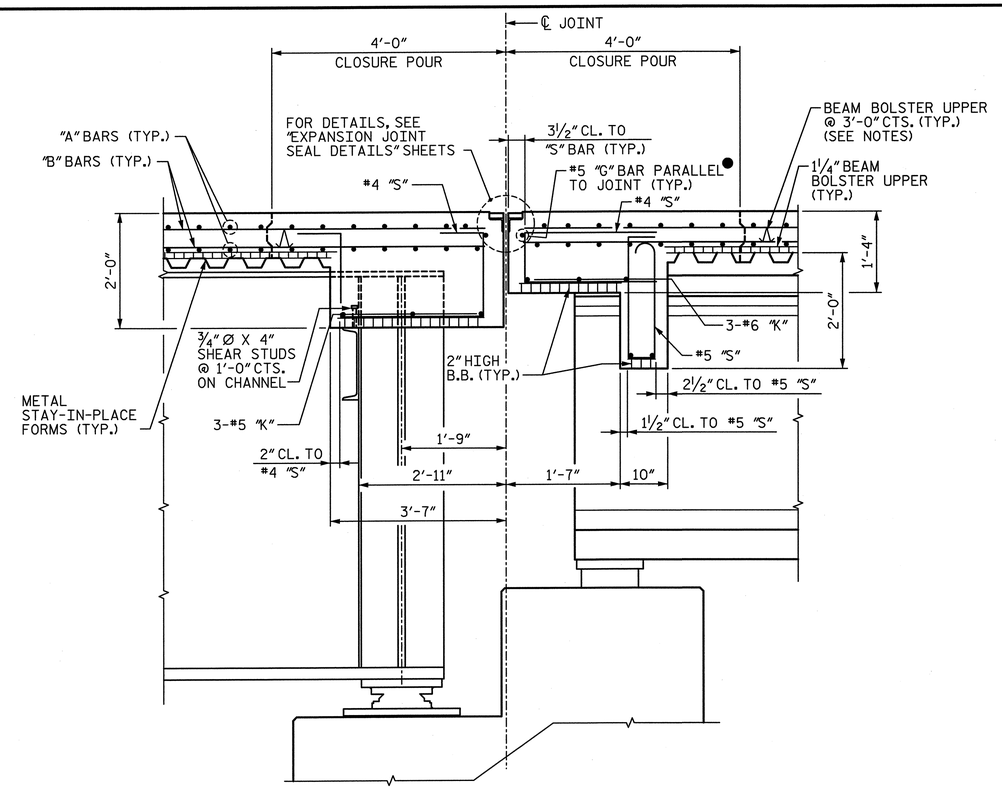

SECTION F-F

END DIAPHRAGMS AT BENT 6
("J" BAR USED WITH STANDARD EXP. JT. NOT SHOWN)

NOTES:

1. FOR BEAM BOLSTER UPPER HEIGHT, SEE CORRESPONDING "TYPICAL SECTION" SHEET.

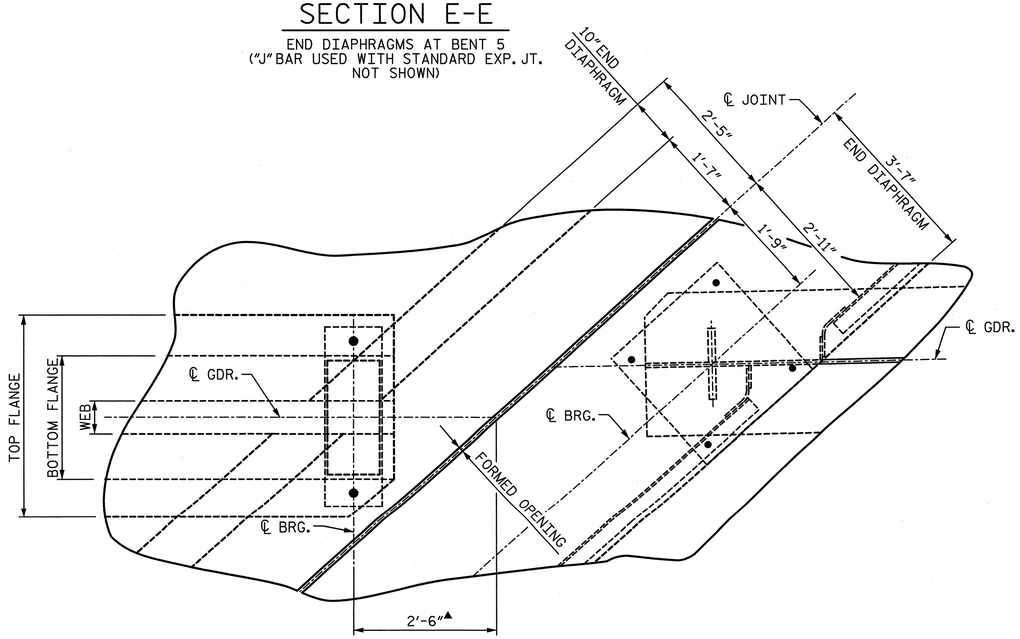

PLAN

(BENT CAP NOT SHOWN FOR CLARITY)

▲ DIMENSIONS ARE MEASURED ALONG ℄ GIRDER.

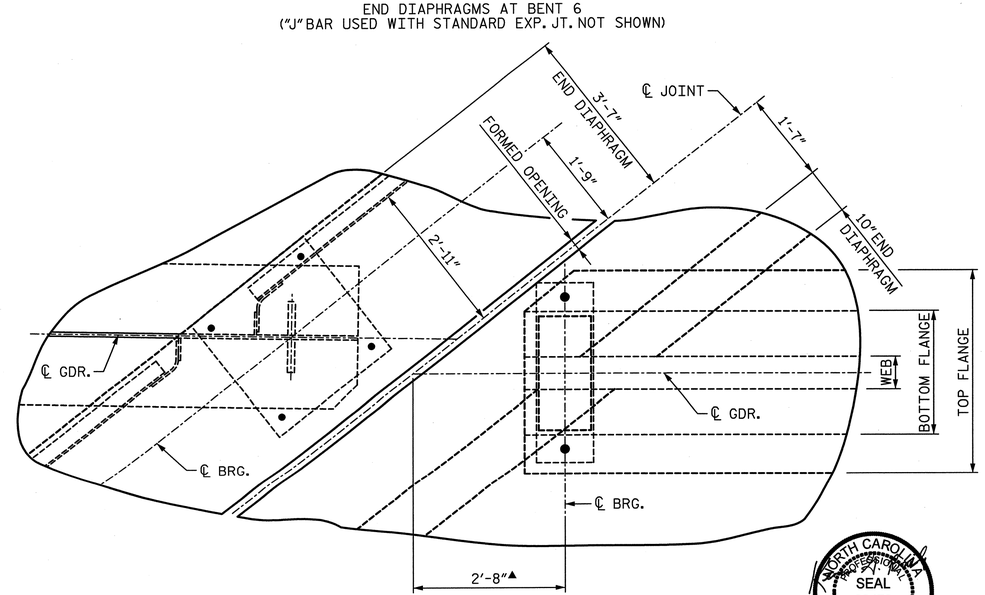

PLAN

(BENT CAP NOT SHOWN FOR CLARITY)

NORTH CAROLINA PROFESSIONAL SEAL 28479 ENGINEER KEVIN G. BAILEY 5-30-13

PROJECT NO. U-2524C
GUILFORD COUNTY
STATION: POT 407+73.35 -L-
= POT 29+32.06 -Y4-

SHEET 3 OF 6

STATE OF NORTH CAROLINA
DEPARTMENT OF TRANSPORTATION
RALEIGH

SUPERSTRUCTURE DETAILS

-LEFT LANE-

REVISIONS							SHEET NO.
NO.	BY:	DATE:	NO.	BY:	DATE:		S-43
1			3				TOTAL SHEETS
2			4				836

STV / Ralph Whitehead Associates, Inc.
1000 West Morehead St., Ste. 200
Charlotte, NC 28208
NC License No. F-0991

DRAWN BY : ACA	DATE : 7-12	DESIGN ENGINEER OF RECORD: A. PETER	DATE : 5-13
CHECKED BY : AJP	DATE : 2-13		

5/30/2013 4:50:33 PM R:\station\Finals\Sup. Sect. Details Sheet 3 of 6.dgn

●#5 "G" BAR MAY BE SHIFTED SLIGHTLY, AS NECESSARY, TO CLEAR REINFORCING STEEL AND STIRRUPS

NOTES:

1. FOR BEAM BOLSTER UPPER HEIGHT, SEE CORRESPONDING "TYPICAL SECTION" SHEET.
2. THE "B" BARS IN THE DECK SLAB MAY BE CUT AS DIRECTED BY THE ENGINEER TO CLEAR THE MODULAR JOINT SUPPORT BOXES.

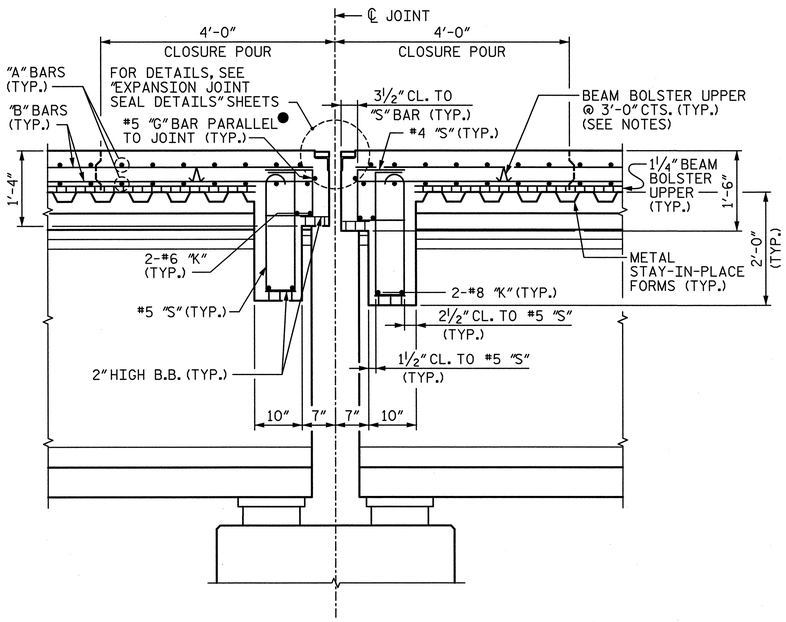

SECTION G-G

END DIAPHRAGMS AT BENT 8
("J" BAR USED WITH STANDARD EXP. JT. NOT SHOWN)

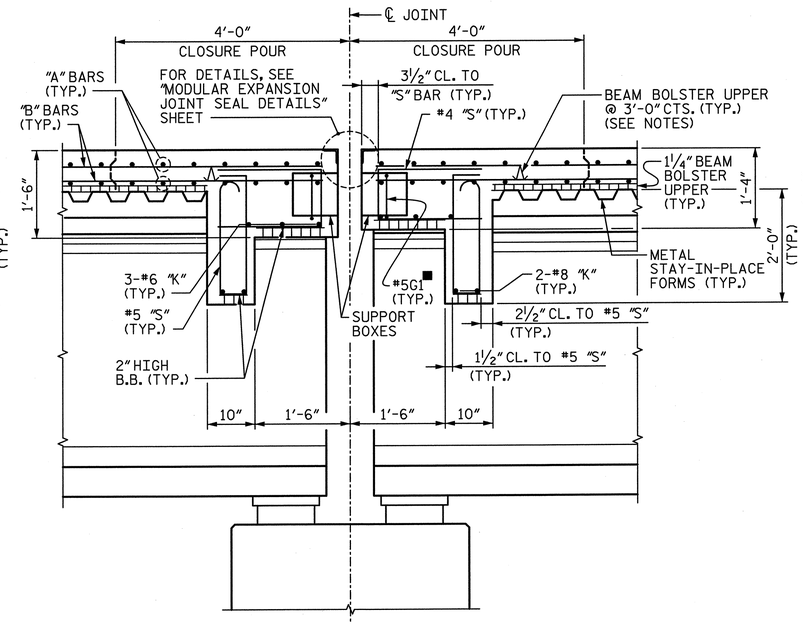

■ SEE CORRESPONDING "TYPICAL SECTION" SHEET FOR DETAILS

SECTION H-H

END DIAPHRAGMS AT BENT 11

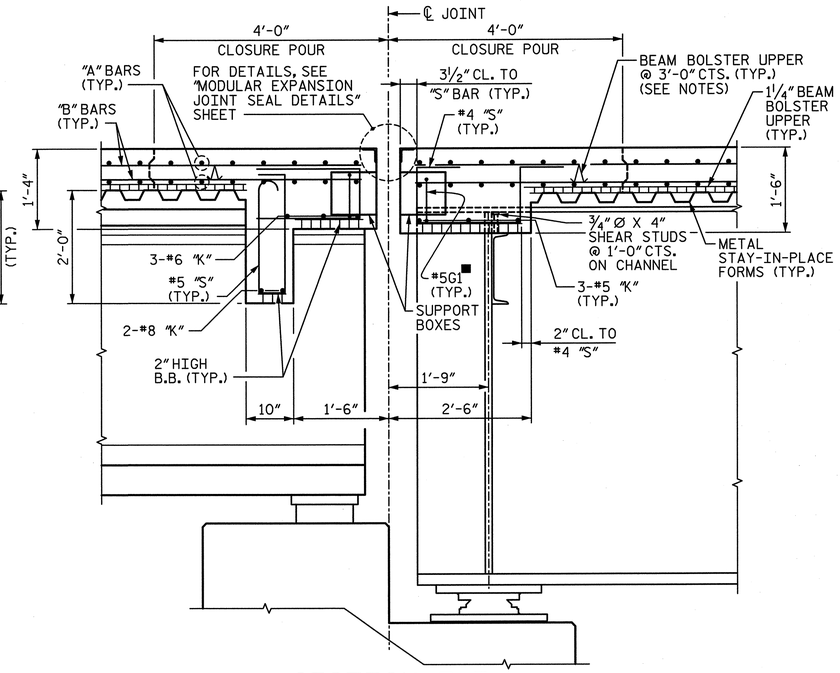

SECTION I-I

END DIAPHRAGMS AT BENT 20

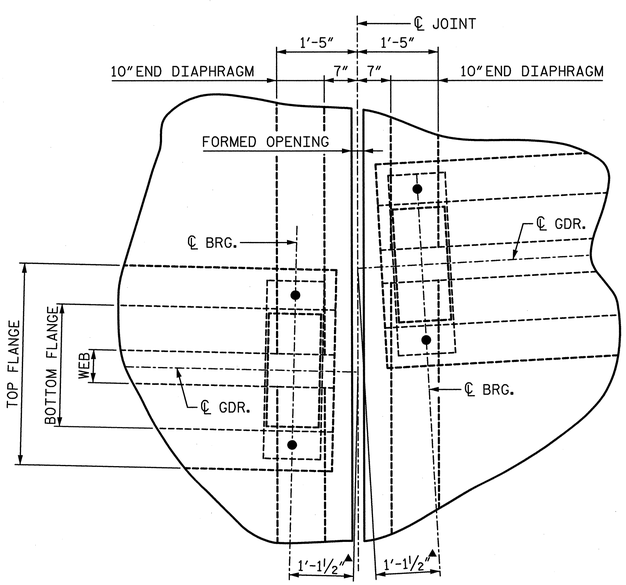

PLAN

(BENT CAP NOT SHOWN FOR CLARITY)

▲ DIMENSIONS ARE MEASURED ALONG ℄ GIRDER.

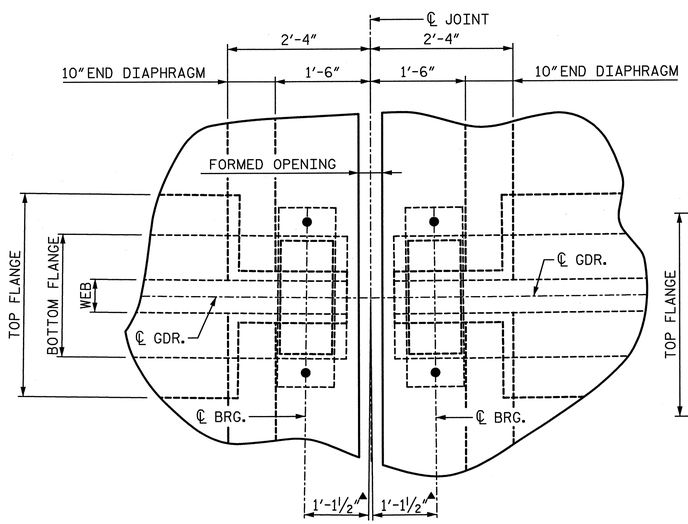

PLAN

(BENT CAP NOT SHOWN FOR CLARITY)

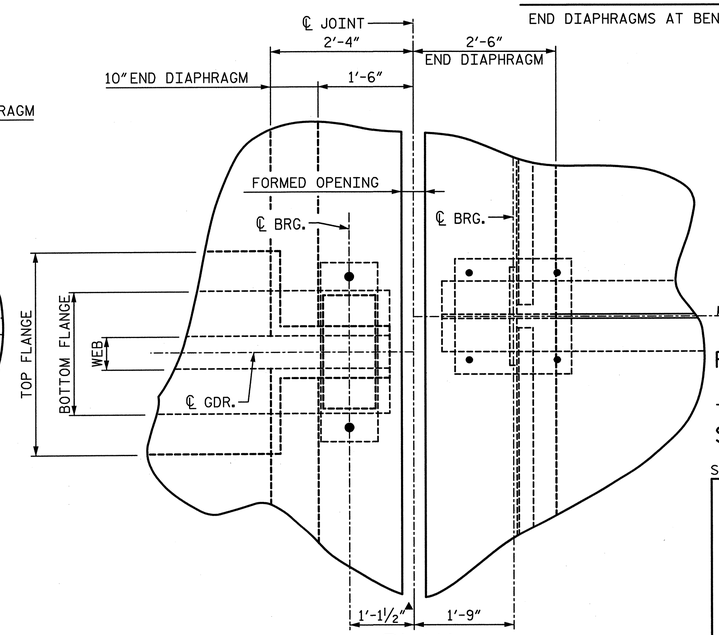

PLAN

(BENT CAP NOT SHOWN FOR CLARITY)

NORTH CAROLINA PROFESSIONAL SEAL 28479 ENGINEER KEVIN G. BAILEY 5-30-13

PROJECT NO. U-2524C
GUILFORD COUNTY
STATION: POT 407+73.35 -L-
= POT 29+32.06 -Y4-

SHEET 4 OF 6

STATE OF NORTH CAROLINA
DEPARTMENT OF TRANSPORTATION
RALEIGH

SUPERSTRUCTURE DETAILS

-LEFT LANE-

REVISIONS							SHEET NO.
NO.	BY:	DATE:	NO.	BY:	DATE:		S-44
1			3				TOTAL SHEETS
2			4				836

STV / Ralph Whitehead Associates, Inc.
1000 West Morehead St., Ste. 200
Charlotte, NC 28208
NC License No. F-0991

DRAWN BY : ACA	DATE : 7-12	DESIGN ENGINEER OF RECORD: A. PETER	DATE : 5-13
CHECKED BY : AJP	DATE : 2-13		

5/30/2013 4:50:38 PM R:\ustation\Finals\Sup. Sect. Details Sheet 4 of 6.dgn

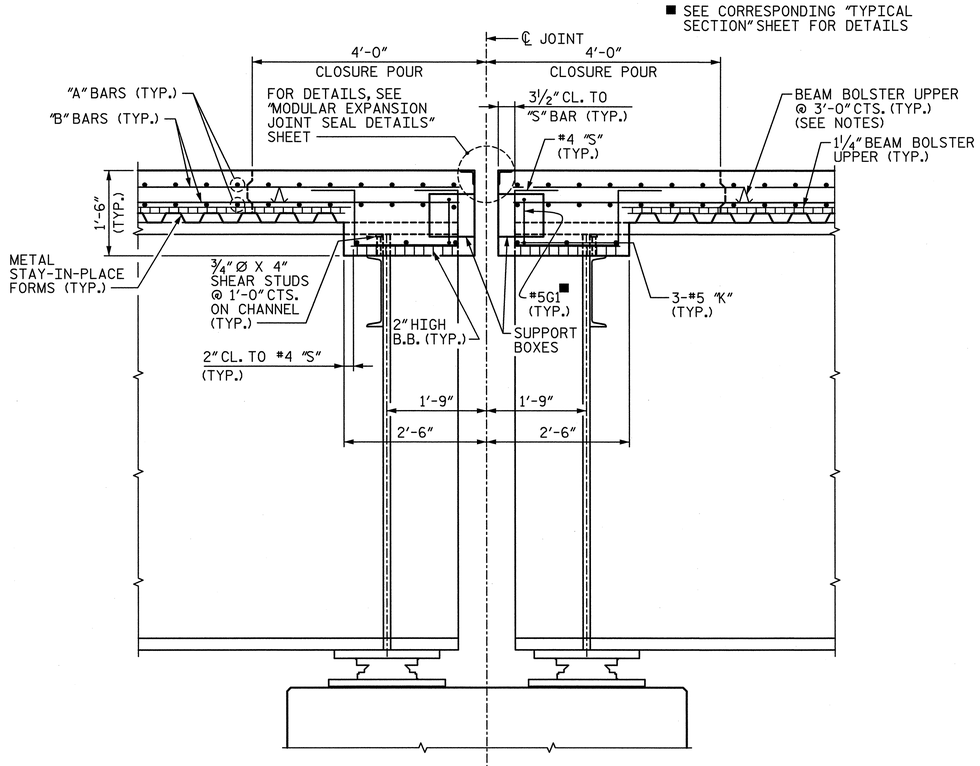

SECTION J-J

END DIAPHRAGMS AT BENT 23

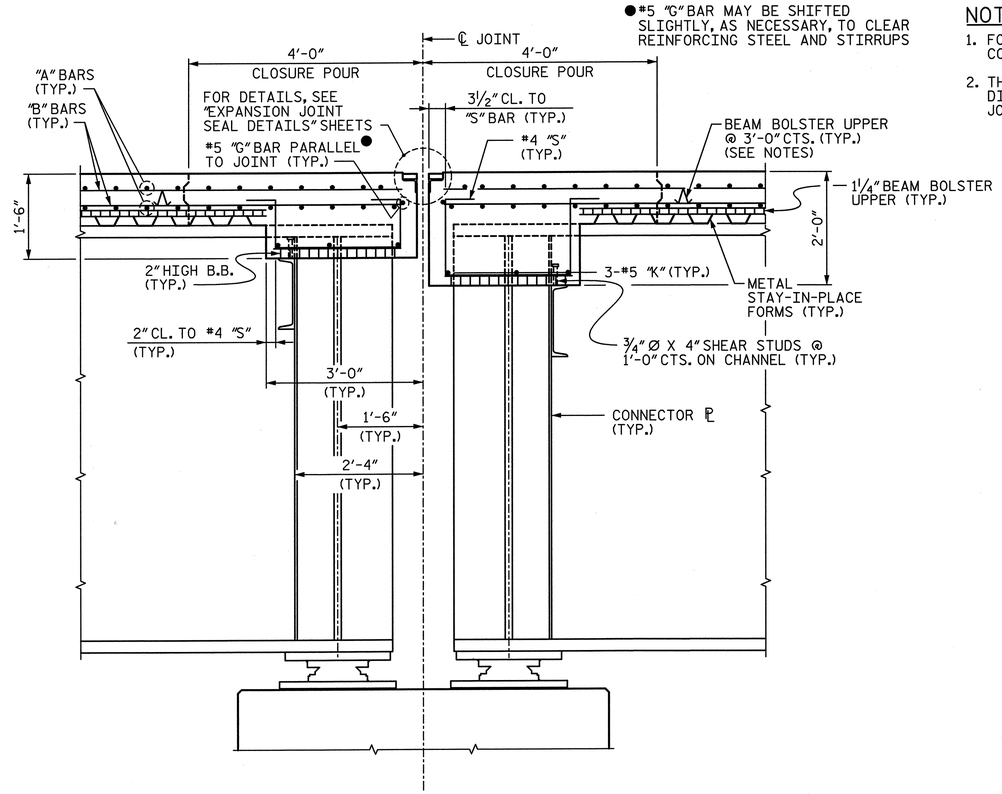

SECTION K-K

END DIAPHRAGMS AT BENT 24
("J" BAR USED WITH STANDARD EXP. JT. NOT SHOWN)

NOTES:

1. FOR BEAM BOLSTER UPPER HEIGHT, SEE CORRESPONDING "TYPICAL SECTION" SHEET.
2. THE "B" BARS IN THE DECK SLAB MAY BE CUT AS DIRECTED BY THE ENGINEER TO CLEAR THE MODULAR JOINT SUPPORT BOXES.

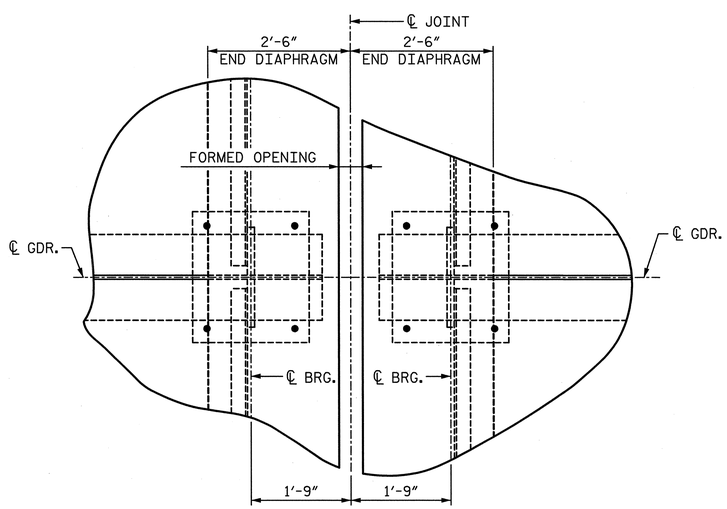

PLAN

(BENT CAP NOT SHOWN FOR CLARITY)

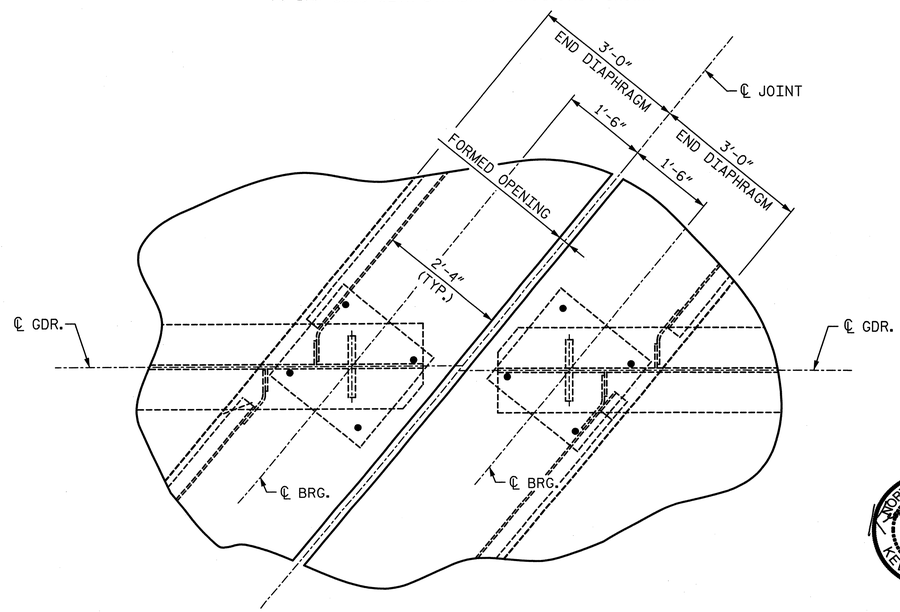

PLAN

(BENT CAP NOT SHOWN FOR CLARITY)

NORTH CAROLINA PROFESSIONAL SEAL 28479 ENGINEER KEVIN G. BAILEY
5-30-13

PROJECT NO. U-2524C
GUILFORD COUNTY
STATION: POT 407+73.35 -L-
= POT 29+32.06 -Y4-

SHEET 5 OF 6

STATE OF NORTH CAROLINA
DEPARTMENT OF TRANSPORTATION
RALEIGH

SUPERSTRUCTURE DETAILS

-LEFT LANE-

REVISIONS						SHEET NO.
NO.	BY:	DATE:	NO.	BY:	DATE:	S-45
1			3			TOTAL SHEETS
2			4			83

STV / Ralph Whitehead Associates, Inc.
1000 West Morehead St., Ste. 200
Charlotte, NC 28208
NC License No. F-0991

DRAWN BY : ACA	DATE : 7-12	DESIGN ENGINEER OF RECORD: A. PETER	DATE : 5-13
CHECKED BY : AJP	DATE : 2-12		

5/30/2013 4:50:42 PM R:\station\Finals\Sup. Sect. Details Sheet 5 of 6.dgn

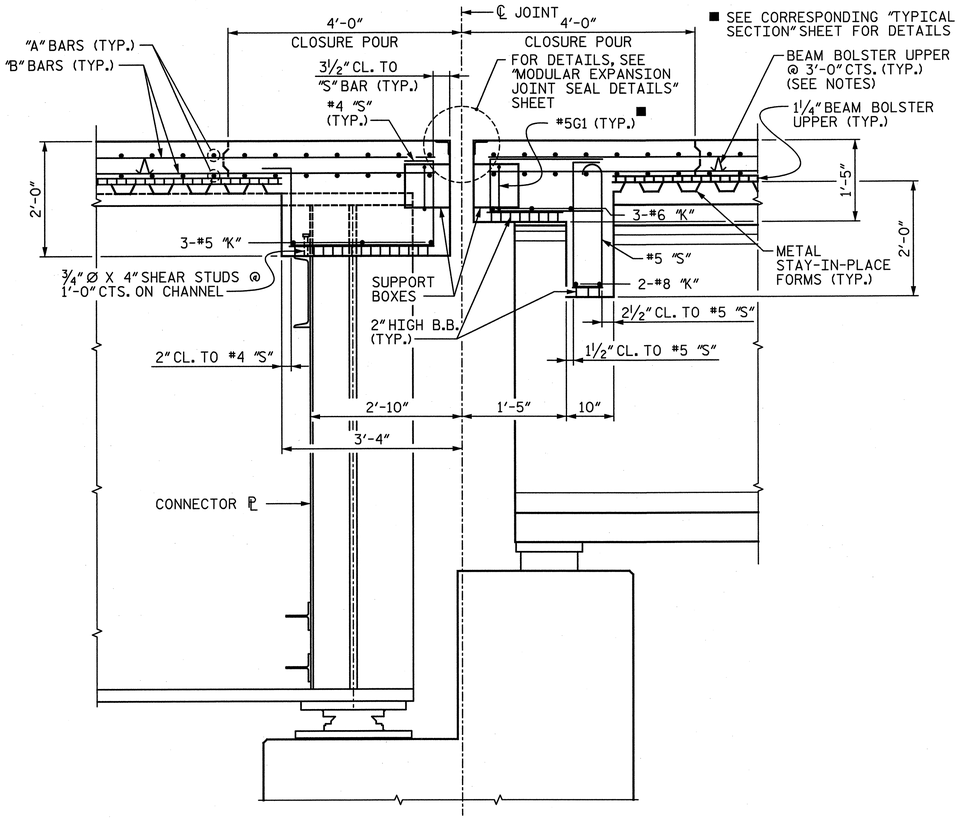

SECTION L-L

END DIAPHRAGMS AT BENT 26

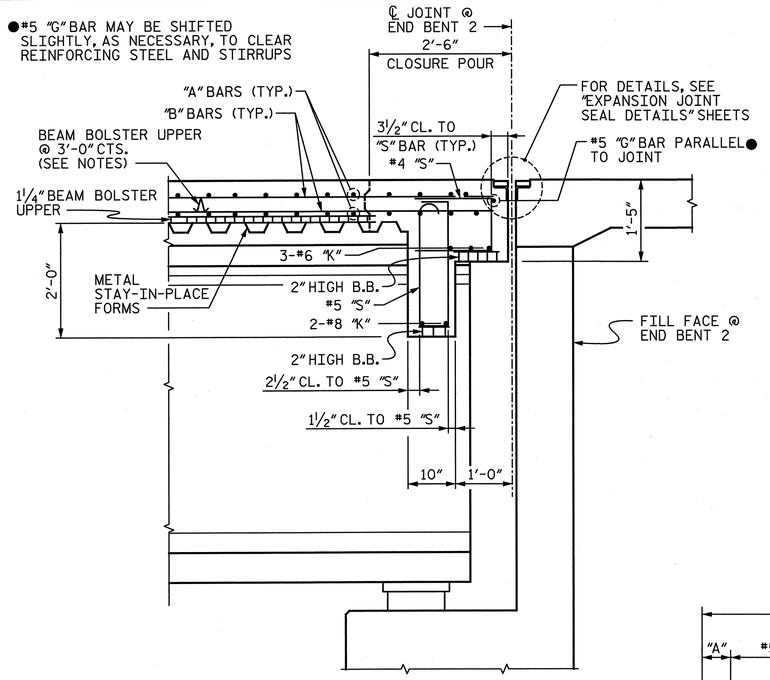

SECTION M-M

END DIAPHRAGM AT END BENT 2
("J" BAR USED WITH STANDARD EXP. JT. NOT SHOWN)

NOTES:

1. FOR BEAM BOLSTER UPPER HEIGHT, SEE CORRESPONDING "TYPICAL SECTION" SHEET.
2. THE "B" BARS IN THE DECK SLAB MAY BE CUT AS DIRECTED BY THE ENGINEER TO CLEAR THE MODULAR JOINT SUPPORT BOXES.

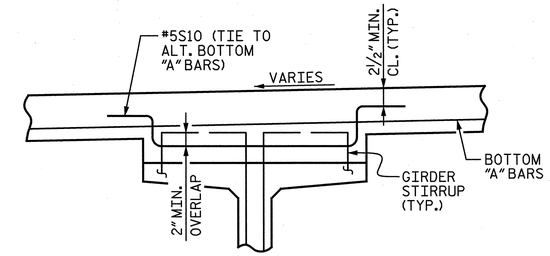

BUILD UP REINFORCING BAR

"B" BARS & TOP "A" BARS IN DECK SLAB NOT SHOWN FOR CLARITY

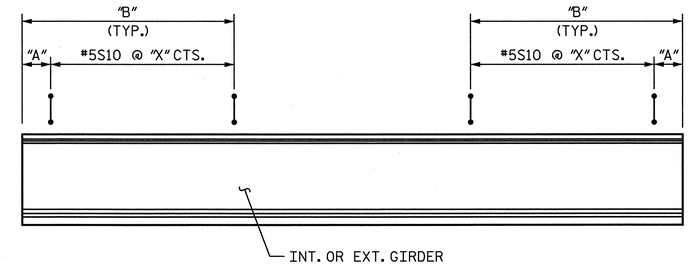

BUILD UP REINFORCING BAR SPACING

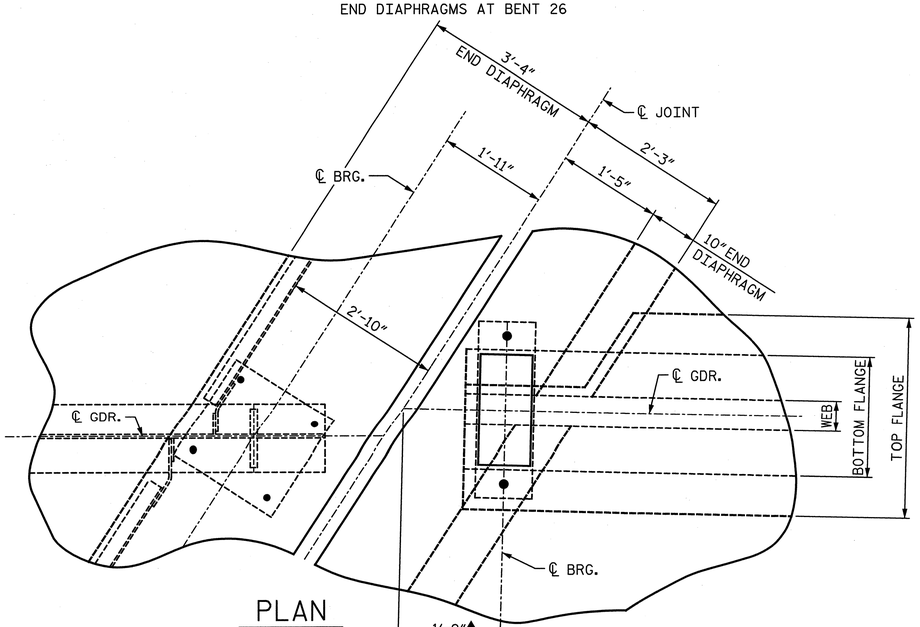

PLAN

(BENT CAP NOT SHOWN FOR CLARITY)

▲ DIMENSIONS ARE MEASURED ALONG ℄ GIRDER.

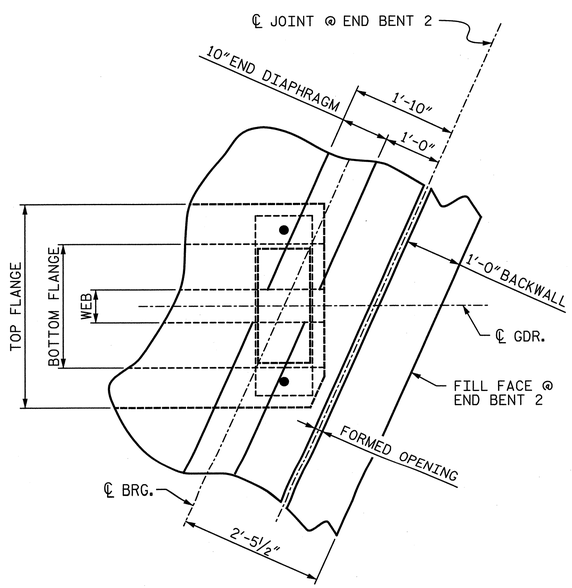

PLAN

(BENT CAP NOT SHOWN FOR CLARITY)

S10 BAR LOCATION

SPAN	GIRDERS	"A"	"B"	"X"
1	1-1 TO 1-6	11"	15'-0"	1'-1"
2	2-1 TO 2-6	1'-0"	40'-0"	1'-1"
7	7-1 TO 7-2	11"	19'-4"	1'-1"
7	7-3 TO 7-5	11"	12'-10"	1'-1"
7	7-6 TO 7-7	11"	8'-6"	1'-1"
8	8-1 TO 8-7	11"	9'-7"	1'-1"
9	9-1 TO 9-8	11"	34'-8"	1'-3"
10	10-1 TO 10-8	11"	45'-11"	1'-3"
11	11-1 TO 11-8	11"	34'-8"	1'-3"
16	16-5	1'-2"	25'-0"	1'-1"
27	27-1 TO 27-6	6"	20'-0"	1'-1"
28	28-1 TO 28-6	6"	20'-0"	1'-1"
29	29-1 TO 29-6	6"	20'-0"	1'-1"
30	30-1 TO 30-6	6"	20'-0"	1'-1"

NORTH CAROLINA PROFESSIONAL SEAL 28479 ENGINEER KEVIN G. BAILEY
5-30-13

PROJECT NO. U-2524C
GUILFORD COUNTY
STATION: POT 407+73.35 -L-
= POT 29+32.06 -Y4-

SHEET 6 OF 6

STATE OF NORTH CAROLINA
DEPARTMENT OF TRANSPORTATION
RALEIGH

SUPERSTRUCTURE DETAILS

-LEFT LANE-

STV/ Ralph Whitehead Associates, Inc.
1000 West Morehead St., Ste. 200
Charlotte, NC 28208
NC License No. F-0991

REVISIONS							SHEET NO.
NO.	BY:	DATE:	NO.	BY:	DATE:		S-46
1			3				TOTAL SHEETS
2			4				836

DRAWN BY : VMW	DATE : 7-12	DESIGN ENGINEER OF RECORD: A. PETER	DATE : 5-13
CHECKED BY : AJP	DATE : 2-13		

5/30/2013 6:37:56 PM R:\ustation\Finals\Sup. Sect. Details Sheet 6 of 6.dgn

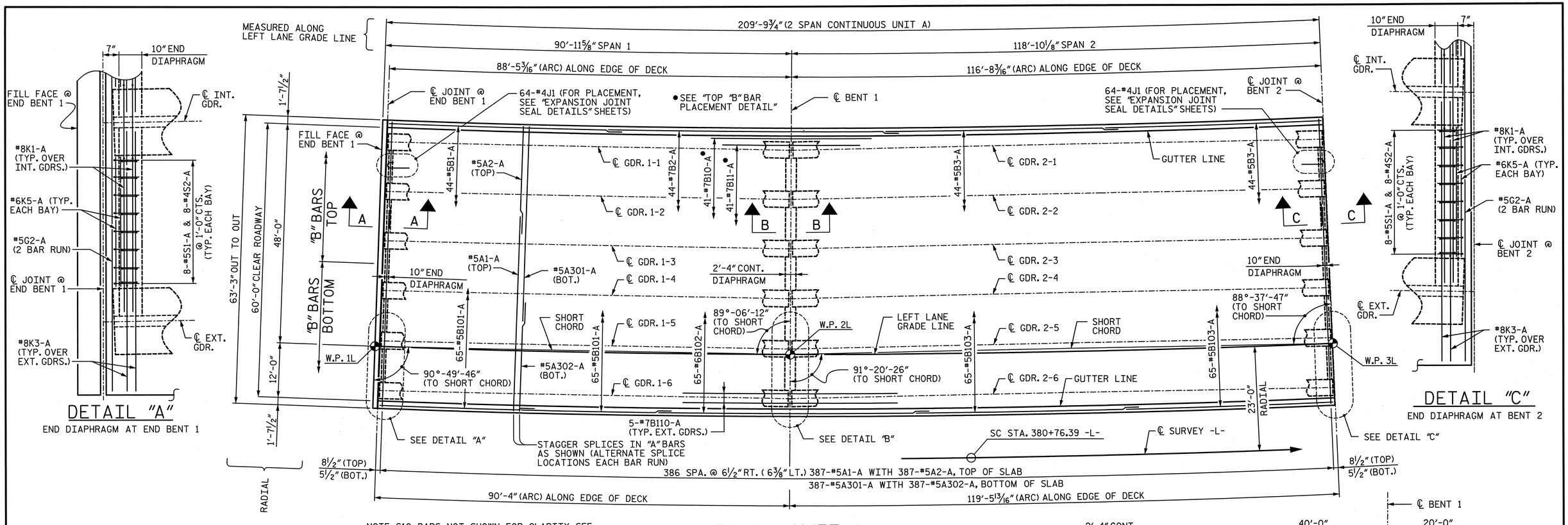

PLAN - UNIT A

NOTE: S10 BARS NOT SHOWN FOR CLARITY, SEE "TYPICAL SECTION" AND "SUPERSTRUCTURE DETAILS" SHEETS FOR DETAILS.

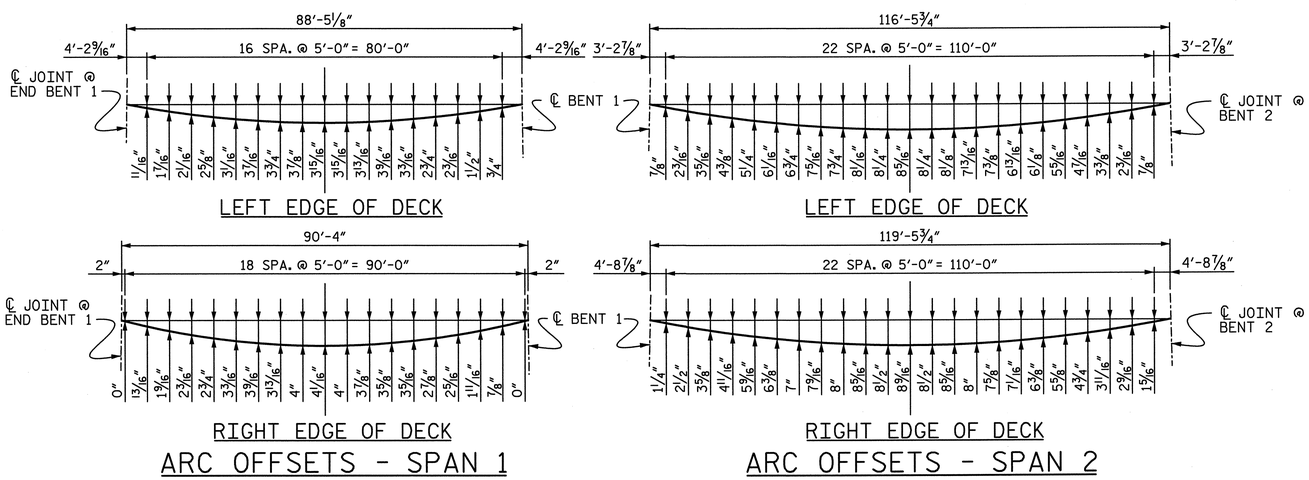

ARC OFFSETS - SPAN 1

ARC OFFSETS - SPAN 2

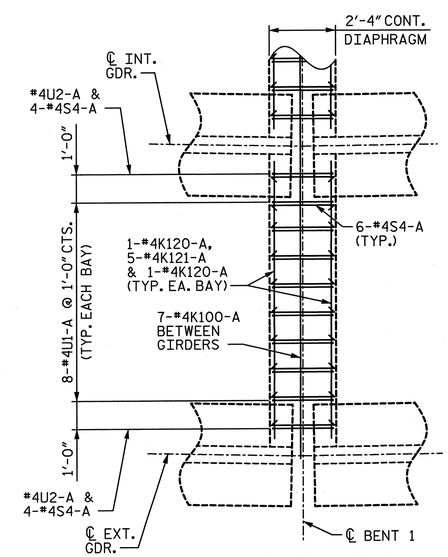

DETAIL "B"

CONTINUOUS DIAPHRAGM AT BENT 1

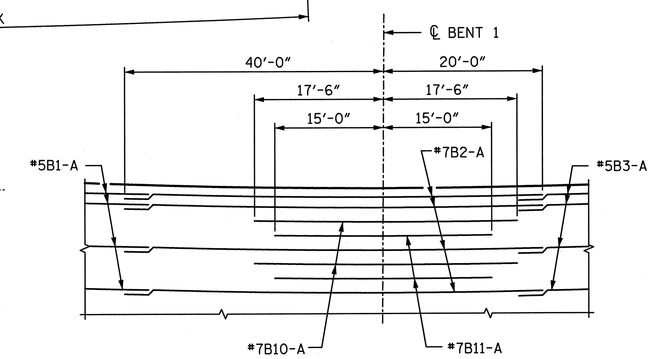

TOP "B" BAR PLACEMENT DETAIL

PROJECT NO. U-2524C

GUILFORD COUNTY

STATION: POT 407+73.35 -L-
= POT 29+32.06 -Y4-

NOTES:

1. FOR CONCRETE BARRIER RAIL DIMENSIONS, REINFORCEMENT AND JOINT SPACING, SEE "PLAN OF RAILS" SHEETS.
2. FOR POURING SEQUENCE AND TRANSVERSE CONSTRUCTION JOINT IN DECK SLAB, SEE "DECK POUR DIAGRAMS" SHEET.
3. FOR SECTION VIEWS, SEE "SUPERSTRUCTURE DETAILS" SHEETS.
4. FOR "B" BAR SPACING AND LOCATION, SEE CORRESPONDING "TYPICAL SECTION" SHEET.
5. "A" BARS TO BE PLACED RADIALLY.
6. FOR DRAINAGE SYSTEM, SEE "STRUCTURE DRAINAGE SYSTEM" SHEETS.
7. FOR MINIMUM SPLICE LENGTHS, SEE "SUPERSTRUCTURE BILL OF MATERIAL".

NORTH CAROLINA PROFESSIONAL SEAL 28479 ENGINEER KEVIN G. BAILEY
6-7-13

STATE OF NORTH CAROLINA
DEPARTMENT OF TRANSPORTATION
RALEIGH

PLAN OF SPANS
UNIT A
SPANS 1 & 2

-LEFT LANE-

STV / Ralph Whitehead Associates, Inc.
1000 West Morehead St. Ste. 200
Charlotte, NC 28208
NC License No. F-0991

REVISIONS						SHEET NO.
NO.	BY:	DATE:	NO.	BY:	DATE:	S-47
1			3			TOTAL SHEETS
2			4			836

DRAWN BY : VMW	DATE : 7-12	DESIGN ENGINEER OF RECORD: A. PETER	DATE : 5-13
CHECKED BY : AJP	DATE : 9-12		

6/7/2013 10:32:21 AM R:\ustation\Finals\Plan of Spans_Spans 1-2.dgn

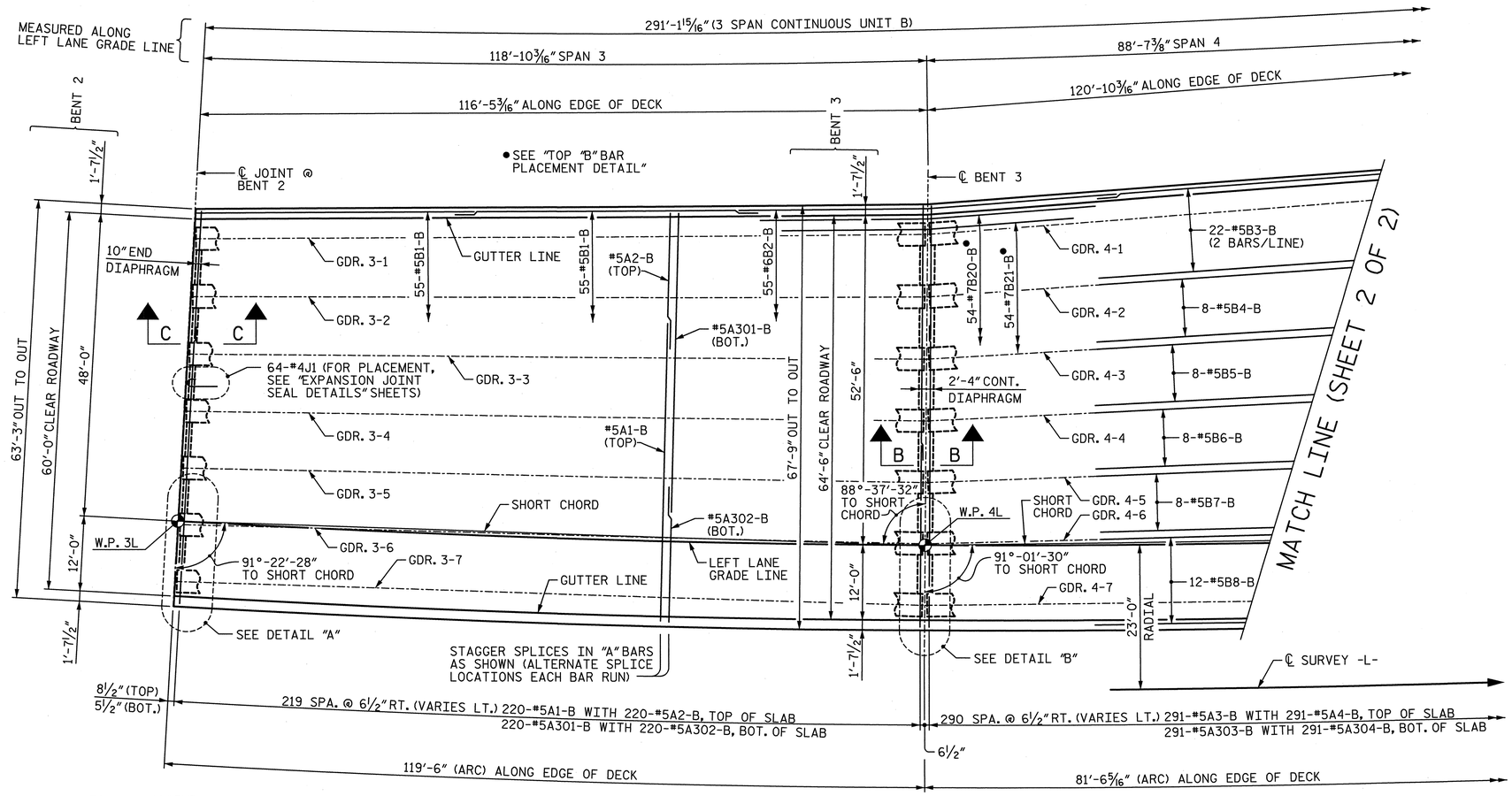

PLAN - UNIT B

FOR BOTTOM "B" BARS, SEE SHEETS 3 & 4 OF 4

NOTES:

1. FOR CONCRETE BARRIER RAIL DIMENSIONS, REINFORCEMENT AND JOINT SPACING, SEE "PLAN OF RAILS" SHEETS.
2. FOR POURING SEQUENCE AND TRANSVERSE CONSTRUCTION JOINT IN DECK SLAB, SEE "DECK POUR DIAGRAMS" SHEET.
3. FOR SECTION VIEWS, SEE "SUPERSTRUCTURE DETAILS" SHEETS.
4. FOR "B" BAR SPACING LAYOUT, SEE CORRESPONDING "TYPICAL SECTION" SHEET.
5. "A" BARS TO BE PLACED RADIALLY, UNLESS NOTED OTHERWISE.
6. FOR DRAINAGE SYSTEM, SEE "STRUCTURE DRAINAGE SYSTEM" SHEETS.
7. FOR MINIMUM SPLICE LENGTHS, SEE "SUPERSTRUCTURE BILL OF MATERIAL".
8. LEFT EDGE OF DECK IS STRAIGHT FOR EACH SPAN IN UNIT, SEE "TYPICAL SECTION UNIT B SPANS 3-5".

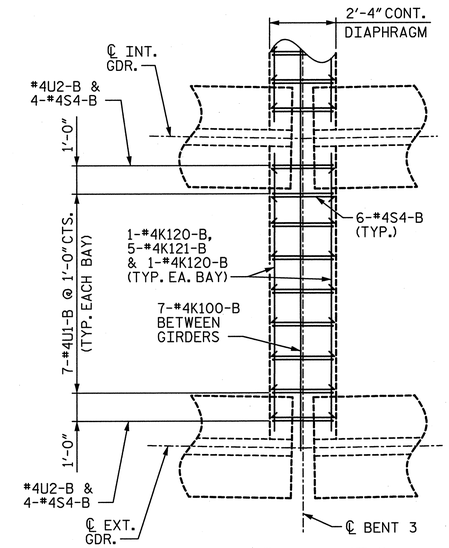

DETAIL "B"

CONTINUOUS DIAPHRAGM AT BENT 3

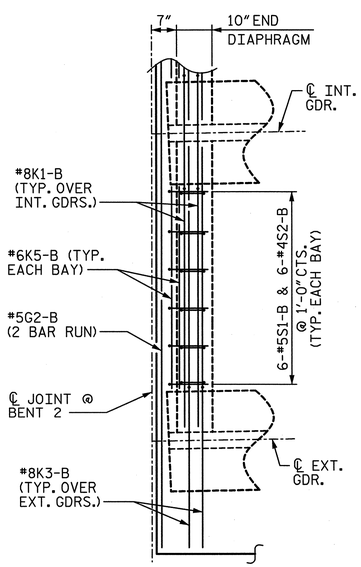

DETAIL "A"

END DIAPHRAGM AT BENT 2

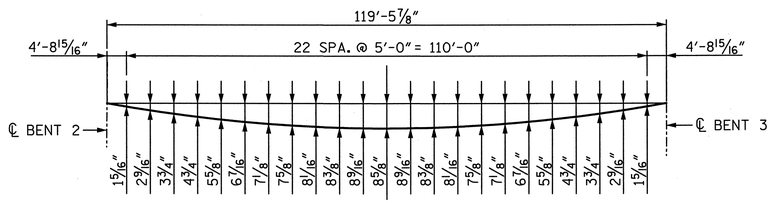

RIGHT EDGE OF DECK

ARC OFFSETS - SPAN 3

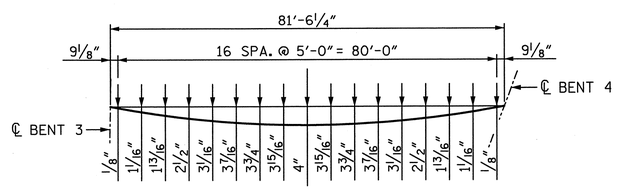

RIGHT EDGE OF DECK

ARC OFFSETS - SPAN 4

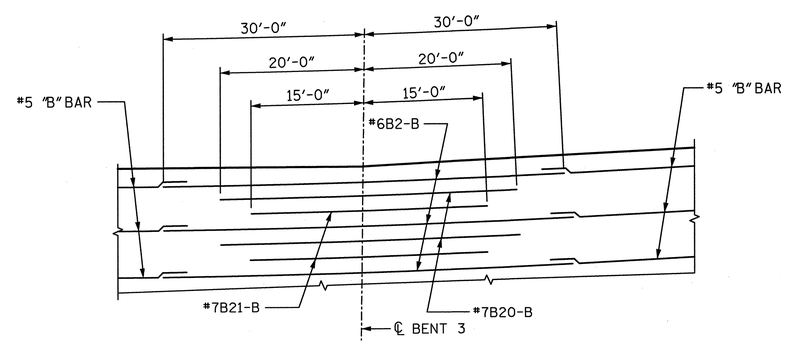

TOP "B" BAR PLACEMENT DETAIL

(BENT 3 SHOWN, BENT 4 SIMILAR)

NORTH CAROLINA PROFESSIONAL SEAL 28479 ENGINEER KEVIN G. BAILEY 5-30-13

PROJECT NO. U-2524C

GUILFORD COUNTY

STATION: POT 407+73.35 -L-
= POT 29+32.06 -Y4-

SHEET 1 OF 4

STATE OF NORTH CAROLINA
DEPARTMENT OF TRANSPORTATION
RALEIGH

PLAN OF SPANS
UNIT B
SPANS 3-5

-LEFT LANE-

REVISIONS							SHEET NO.
NO.	BY:	DATE:	NO.	BY:	DATE:		S-48
1			3				TOTAL SHEETS
2			4				836

STV / Ralph Whitehead Associates, Inc.
1000 West Morehead St., Ste. 200
Charlotte, NC 28208
NC License No. F-0991

DRAWN BY : ACA	DATE : 8-12	DESIGN ENGINEER OF RECORD: A. PETER	DATE : 5-13
CHECKED BY : AJP	DATE : 12-12		

5/30/2013 9:16:18 PM R:\ustation\Finals\Plan of Spans_Spans 3-5_Sheet 1of 4.dgn

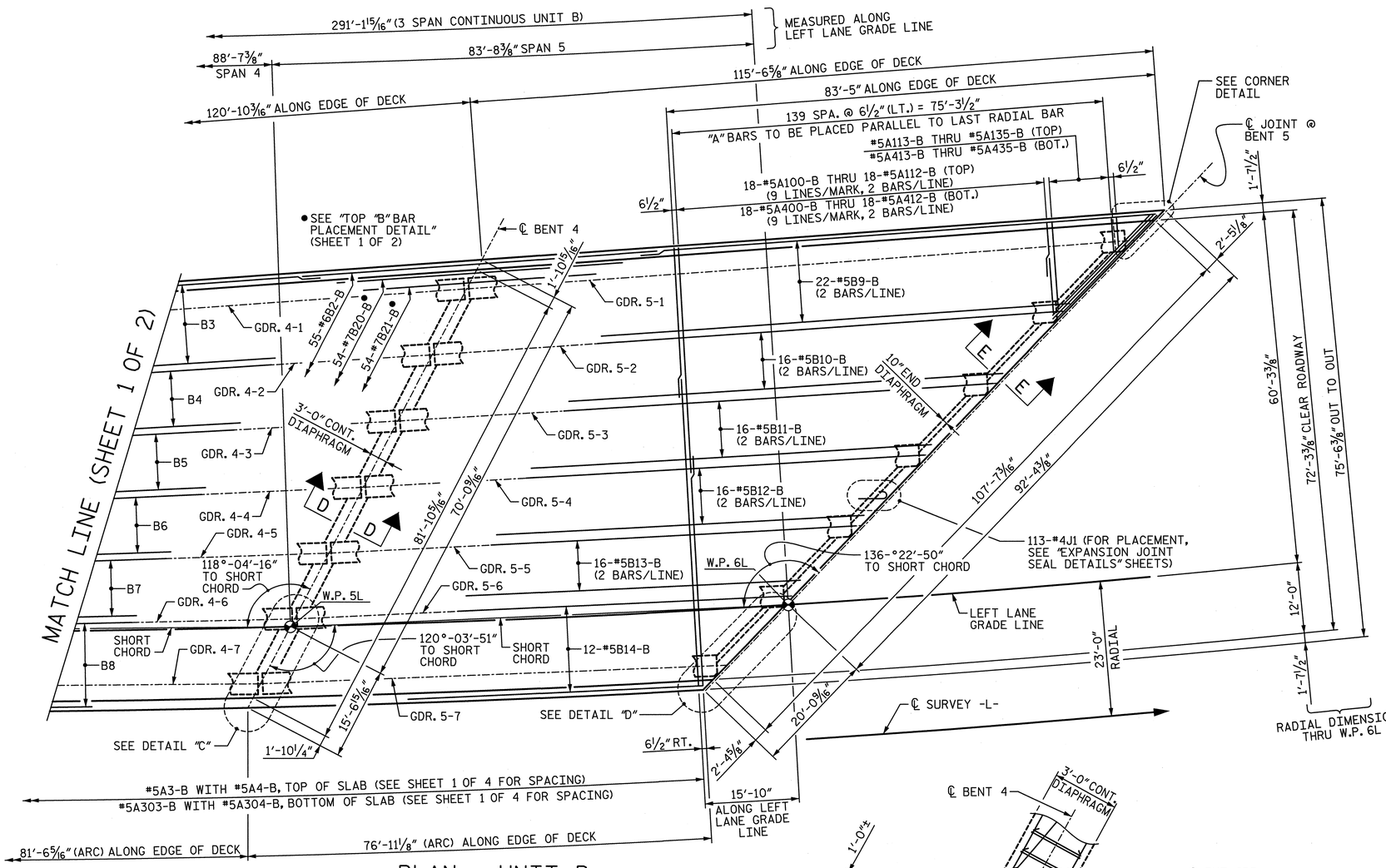

PLAN - UNIT B

FOR BOTTOM "B" BARS, SEE SHEETS 3 & 4 OF 4

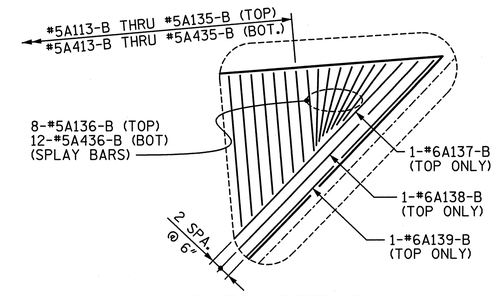

CORNER DETAIL

TOP BARS SHOWN, BOTTOM BARS SIMILAR

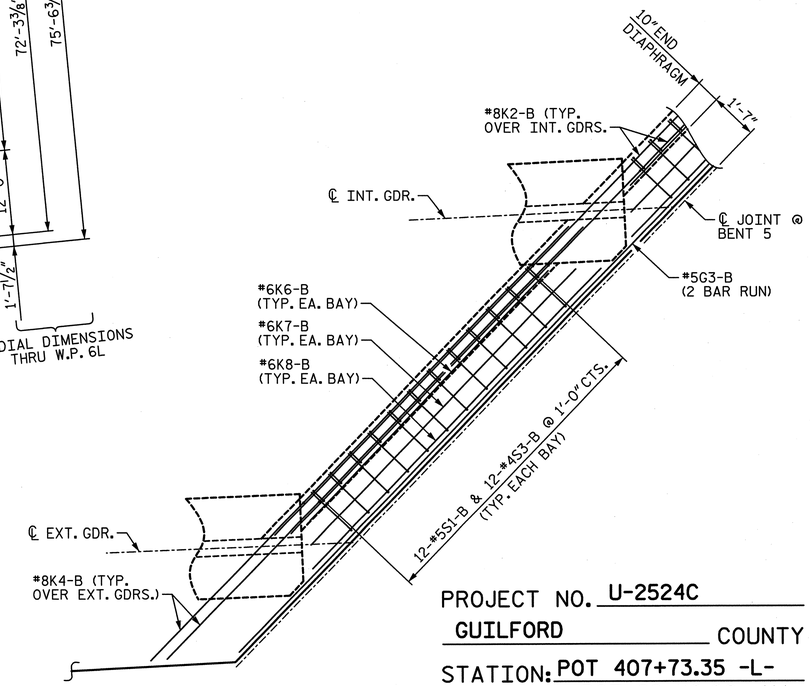

DETAIL "D"

END DIAPHRAGM AT BENT 5

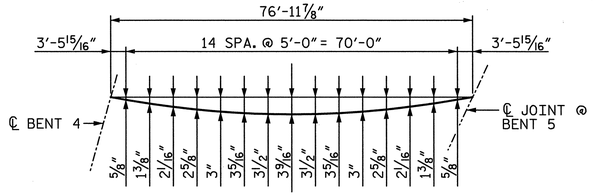

RIGHT EDGE OF DECK

ARC OFFSETS - SPAN 5

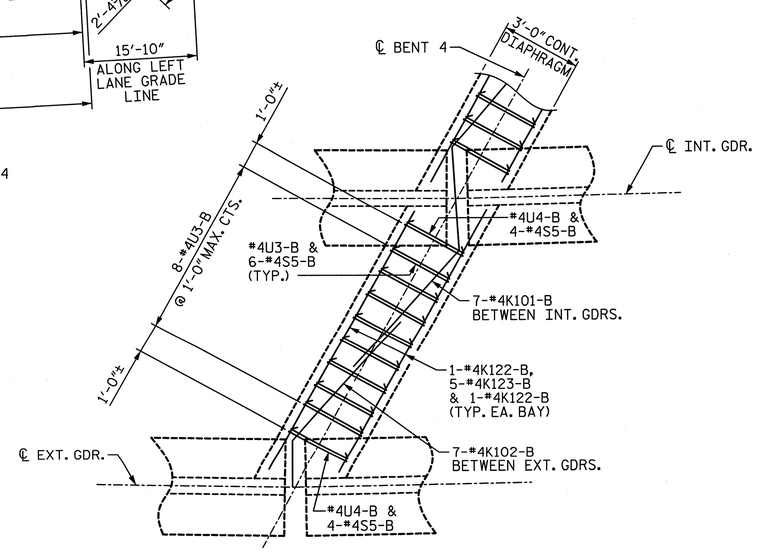

DETAIL "C"

CONTINUOUS DIAPHRAGM AT BENT 4

PROJECT NO. U-2524C

GUILFORD COUNTY

STATION: POT 407+73.35 -L-
= POT 29+32.06 -Y4-

SHEET 2 OF 4

STATE OF NORTH CAROLINA
DEPARTMENT OF TRANSPORTATION
RALEIGH

PLAN OF SPANS
UNIT B
SPANS 3-5

-LEFT LANE-

NORTH CAROLINA PROFESSIONAL SEAL 28479 ENGINEER KEVIN G. BAILEY 6-7-13

STV/Ralph Whitehead Associates, Inc.
1000 West Morehead St., Ste. 200
Charlotte, NC 28208
NC License No. F-0991

REVISIONS								
NO.	BY:	DATE:	NO.	BY:	DATE:		SHEET NO. S-49
1			3				TOTAL SHEETS 836
2			4				

DRAWN BY : ACA	DATE : 10-12	DESIGN ENGINEER OF RECORD: A. PETER	DATE : 5-13
CHECKED BY : AJP	DATE : 12-12		

6/7/2013 10:32:27 AM R:\ustation\Finals\Plan of Spans_Spans 3-5_Sheet 2 of 4.dgn

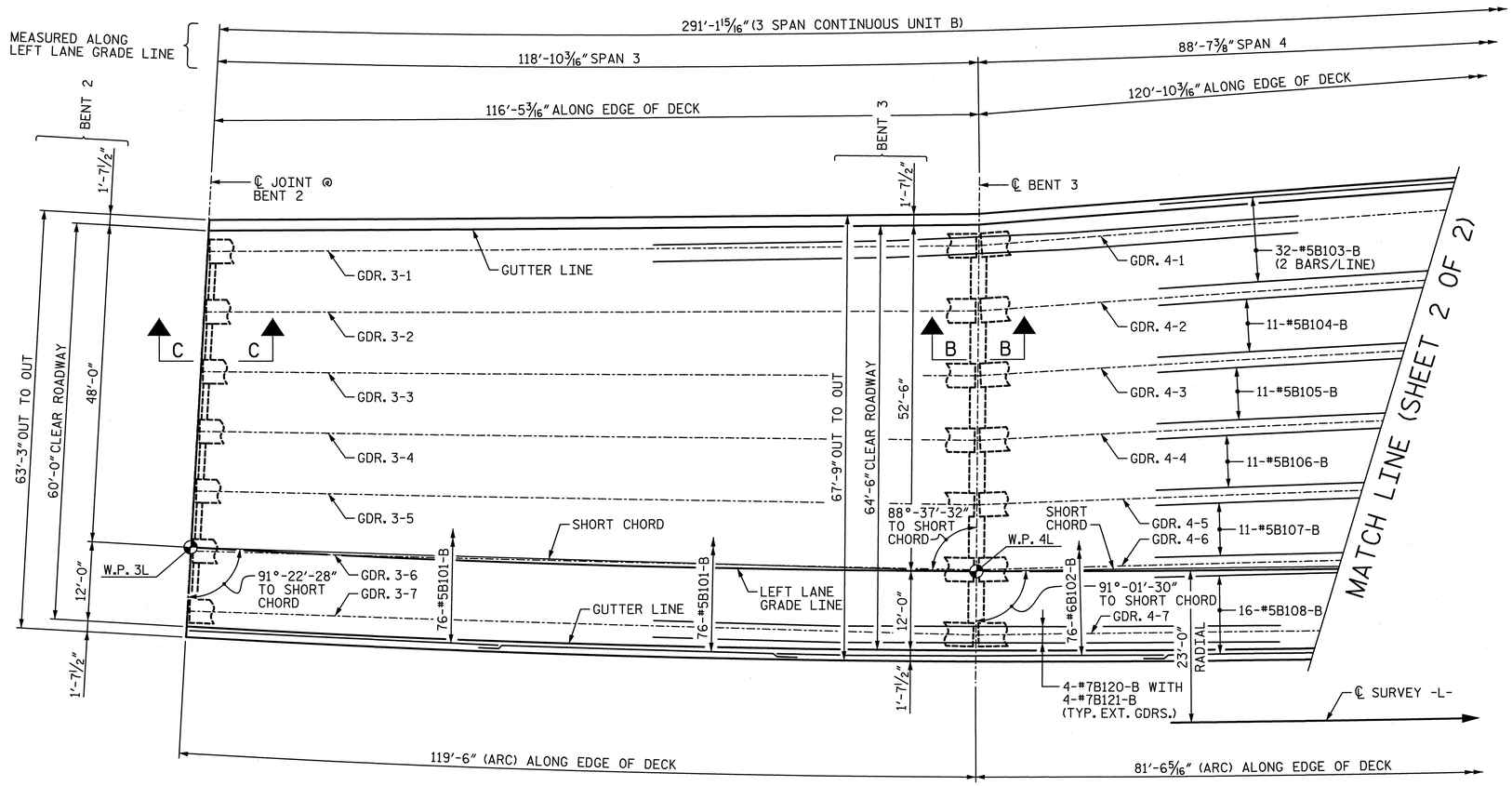

PLAN - UNIT B - BOTTOM "B" BARS

FOR ALL REMAINING SLAB STEEL, SEE SHEETS 1 & 2 OF 4

PROJECT NO. U-2524C

GUILFORD COUNTY

STATION: POT 407+73.35 -L-
= POT 29+32.06 -Y4-

SHEET 3 OF 4

STATE OF NORTH CAROLINA
DEPARTMENT OF TRANSPORTATION
RALEIGH

PLAN OF SPANS
UNIT B
SPANS 3-5

-LEFT LANE-

NORTH CAROLINA PROFESSIONAL SEAL 28479 ENGINEER KEVIN G. BAILEY 5-30-13

STV/Ralph Whitehead Associates, Inc.
1000 West Morehead St., Ste. 200
Charlotte, NC 28208
NC License No. F-0991

REVISIONS						
NO.	BY:	DATE:	NO.	BY:	DATE:	
1			3			
2			4			

SHEET NO. S-50
TOTAL SHEETS 836

DRAWN BY : ACA DATE : 8-12
CHECKED BY : AJP DATE : 12-12

DESIGN ENGINEER OF RECORD: A. PETER DATE : 5-13

5/30/2013 4:51:06 PM R:\ustation\Finals\Plan of Spans_Spans 3-5_Sheet 3 of 4.dgn

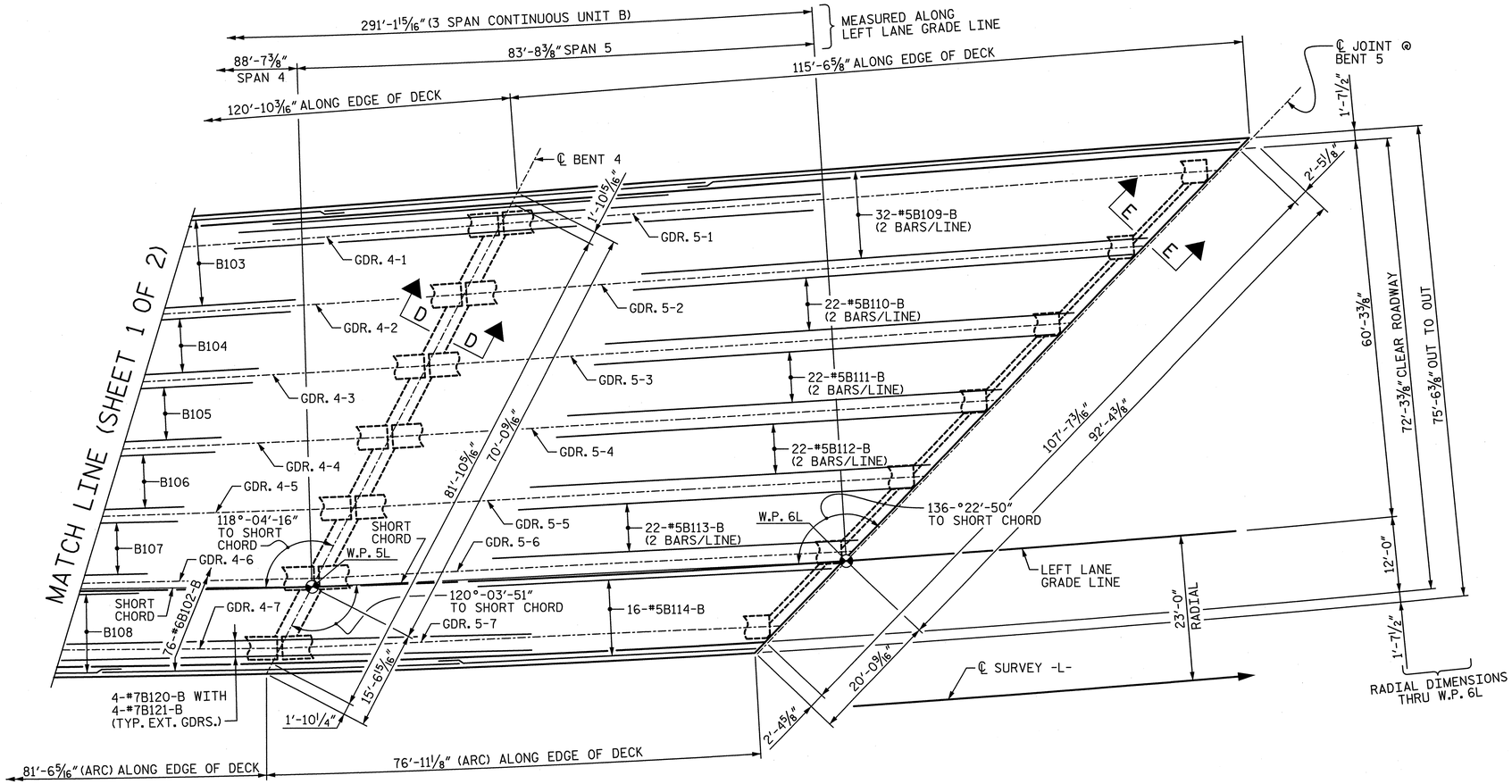

PLAN - UNIT B - BOTTOM "B" BARS

FOR ALL REMAINING SLAB STEEL, SEE SHEETS 1 & 2 OF 4

PROJECT NO. U-2524C

GUILFORD COUNTY

STATION: POT 407+73.35 -L-
= POT 29+32.06 -Y4-

SHEET 4 OF 4

STATE OF NORTH CAROLINA
DEPARTMENT OF TRANSPORTATION
RALEIGH

PLAN OF SPANS
UNIT B
SPANS 3-5

-LEFT LANE-

NORTH CAROLINA PROFESSIONAL SEAL 28479 ENGINEER KEVIN G. BAILEY
5-30-13

REVISIONS						SHEET NO.
NO.	BY:	DATE:	NO.	BY:	DATE:	S-51
1			3			TOTAL SHEETS
2			4			336

STV / Ralph Whitehead Associates, Inc.
1000 West Morehead St., Ste. 200
Charlotte, NC 28208
NC License No. F-0991

DRAWN BY : ACA	DATE : 10-12	DESIGN ENGINEER OF RECORD: A. PETER	DATE : 5-13
CHECKED BY : AJP	DATE : 12-12		

5/30/2013 4:51:10 PM R:\ustation\Finals\Plan of Spans_Spans 3-5_Sheet 4 of 4.dgn

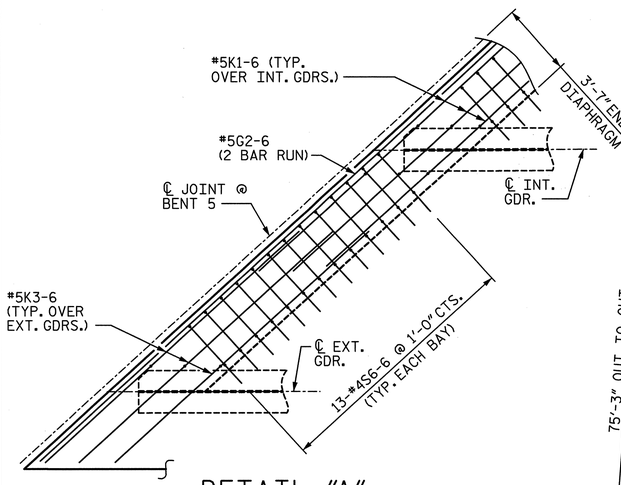

DETAIL "A"

END DIAPHRAGM AT BENT 5

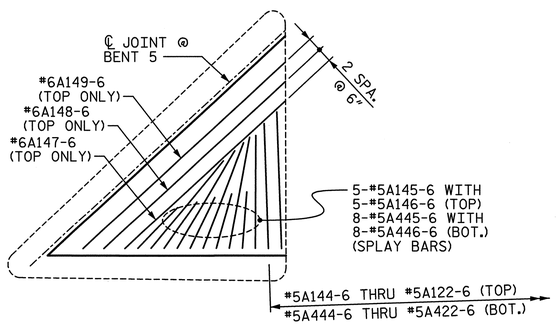

CORNER DETAIL

TOP BARS SHOWN, BOTTOM BARS SIMILAR

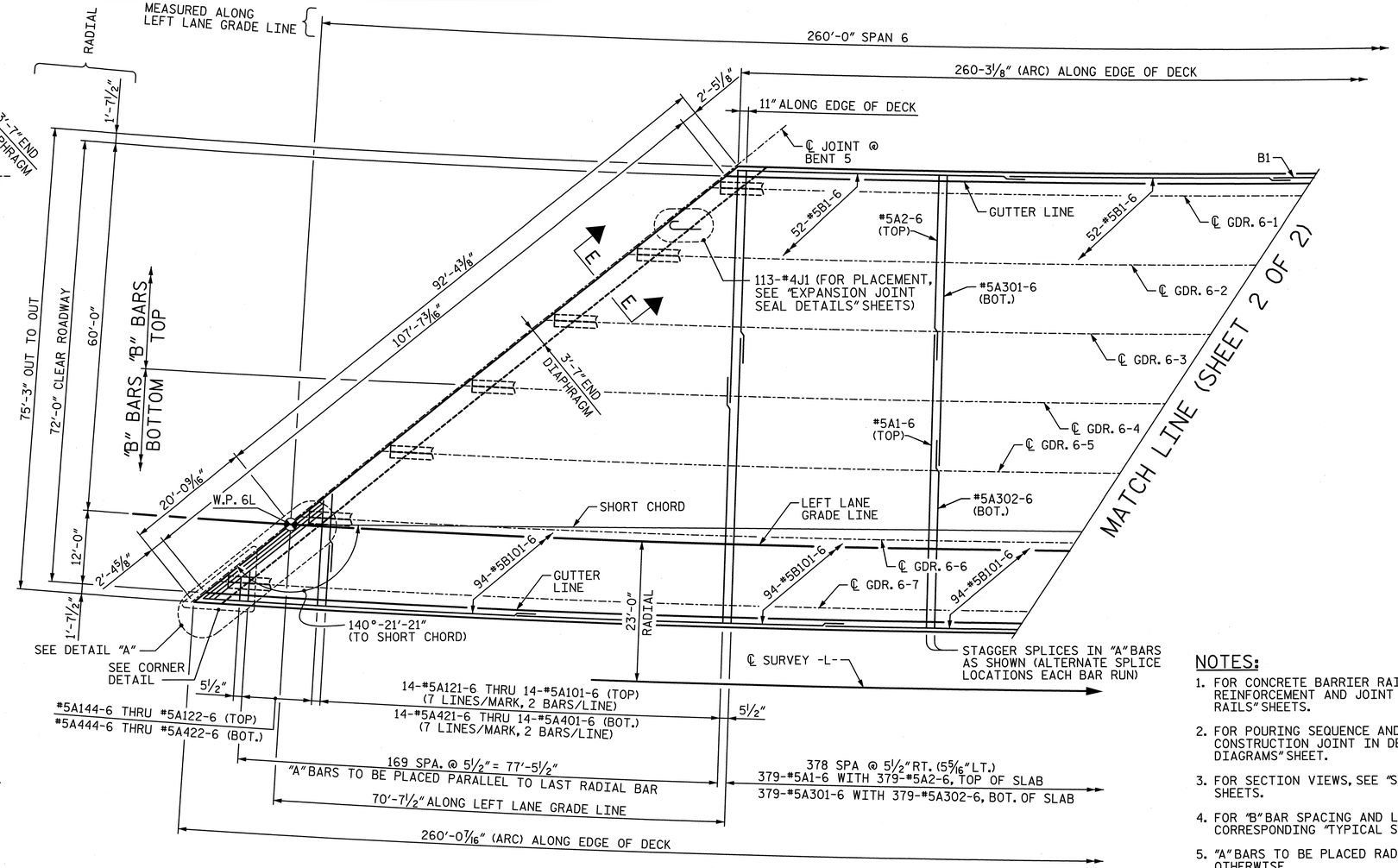

PLAN - SPAN 6

NOTES:

1. FOR CONCRETE BARRIER RAIL DIMENSIONS, REINFORCEMENT AND JOINT SPACING, SEE "PLAN OF RAILS" SHEETS.
2. FOR POURING SEQUENCE AND TRANSVERSE CONSTRUCTION JOINT IN DECK SLAB, SEE "DECK POUR DIAGRAMS" SHEET.
3. FOR SECTION VIEWS, SEE "SUPERSTRUCTURE DETAILS" SHEETS.
4. FOR "B" BAR SPACING AND LOCATION, SEE CORRESPONDING "TYPICAL SECTION" SHEET.
5. "A" BARS TO BE PLACED RADIALLY, UNLESS NOTED OTHERWISE.
6. FOR MINIMUM SPLICE LENGTHS, SEE "SUPERSTRUCTURE BILL OF MATERIAL".

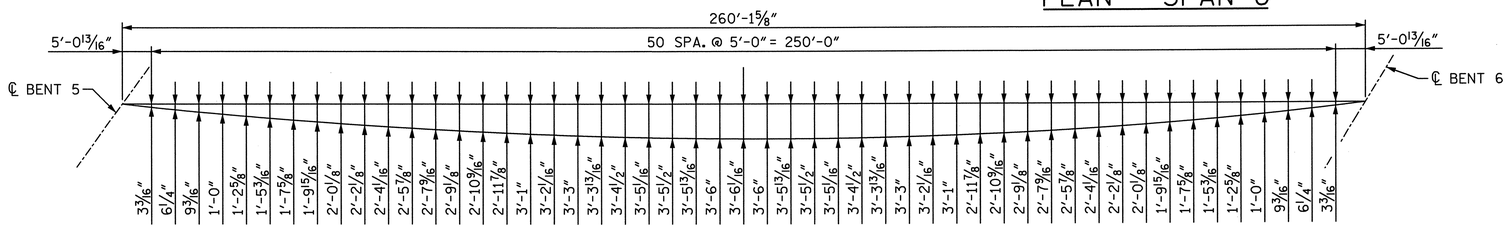

LEFT EDGE OF DECK

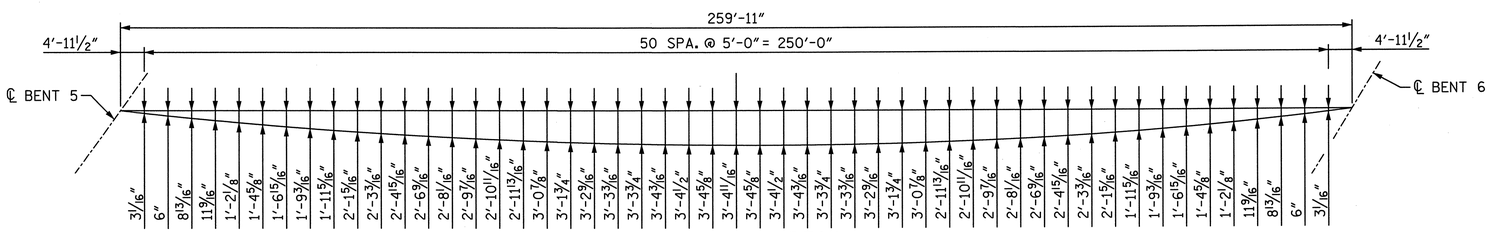

RIGHT EDGE OF DECK

ARC OFFSETS - SPAN 6

PROJECT NO. U-2524C

GUILFORD COUNTY

STATION: POT 407+73.35 -L-
= POT 29+32.06 -Y4-

SHEET 1 OF 2

STATE OF NORTH CAROLINA
DEPARTMENT OF TRANSPORTATION
RALEIGH

PLAN OF SPANS
SPAN 6

-LEFT LANE-

NORTH CAROLINA PROFESSIONAL SEAL 28479 ENGINEER KEVIN G. BAILEY 6-7-13

DRAWN BY : ACA	DATE : 8-12	DESIGN ENGINEER OF RECORD: A. PETER	DATE : 5-13
CHECKED BY : AJP	DATE : 2-13		

STV / Ralph Whitehead Associates, Inc.
1000 West Morehead St., Ste. 200
Charlotte, NC 28208
NC License No. F-0991

REVISIONS								SHEET NO.
NO.	BY:	DATE:	NO.	BY:	DATE:			S-52
1			3					TOTAL SHEETS
2			4					836

6/7/2013 10:32:32 AM R:\ustation\Finals\Plan of Spans_Span 6_Sheet 1 of 2.dgn

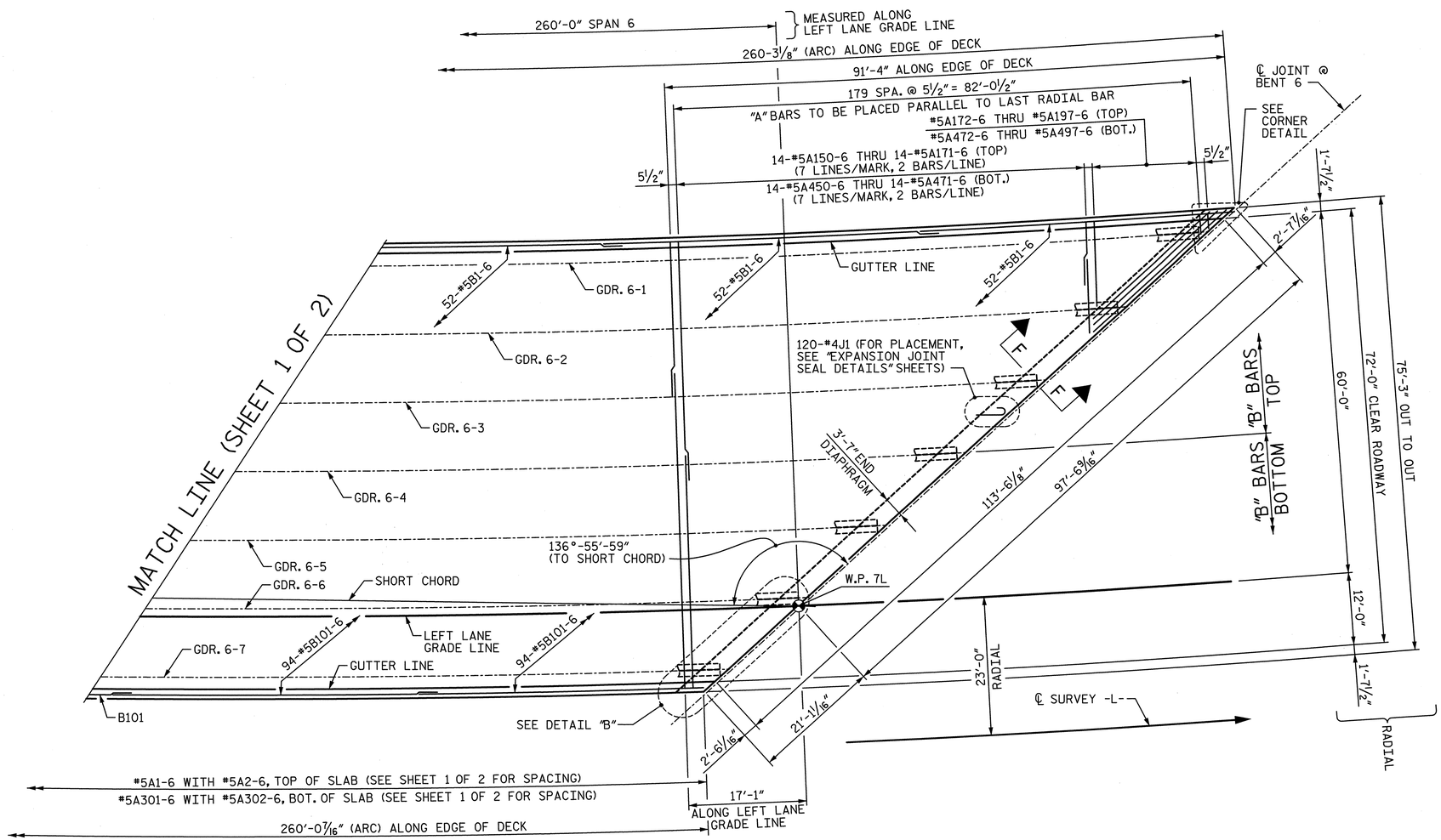

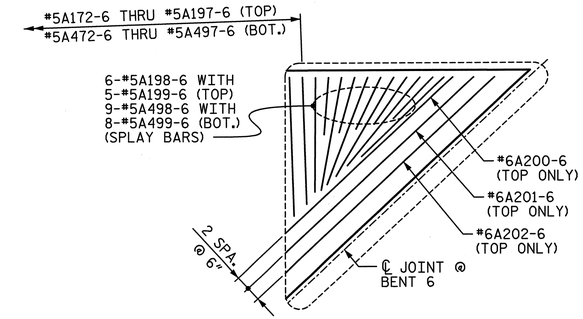

CORNER DETAIL

TOP BARS SHOWN, BOTTOM BARS SIMILAR

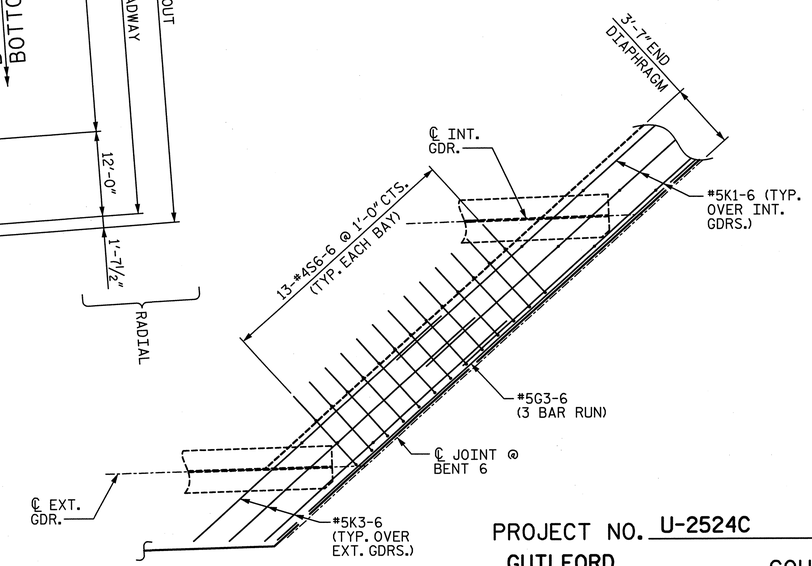

DETAIL "B"

END DIAPHRAGM AT BENT 6

PROJECT NO. U-2524C

GUILFORD COUNTY

STATION: POT 407+73.35 -L-
= POT 29+32.06 -Y4-

SHEET 2 OF 2

NORTH CAROLINA PROFESSIONAL SEAL 28479 ENGINEER KEVIN G. BAILEY 6-7-13

STATE OF NORTH CAROLINA
DEPARTMENT OF TRANSPORTATION
RALEIGH

PLAN OF SPANS
SPAN 6

-LEFT LANE-

REVISIONS							SHEET NO.
NO.	BY:	DATE:	NO.	BY:	DATE:		S-53
1			3				TOTAL SHEETS
2			4				836

STV/ Ralph Whitehead Associates, Inc.
1000 West Morehead St., Ste. 200
Charlotte, NC 28208
NC License No. F-0991

DRAWN BY : ACA	DATE : 8-12	DESIGN ENGINEER OF RECORD: A. PETER	DATE : 5-13
CHECKED BY : AJP	DATE : 2-13		

6/7/2013 10:32:36 AM R:\ustation\Finals\Plan of Spans_Span 6_Sheet 2 of 2.dgn

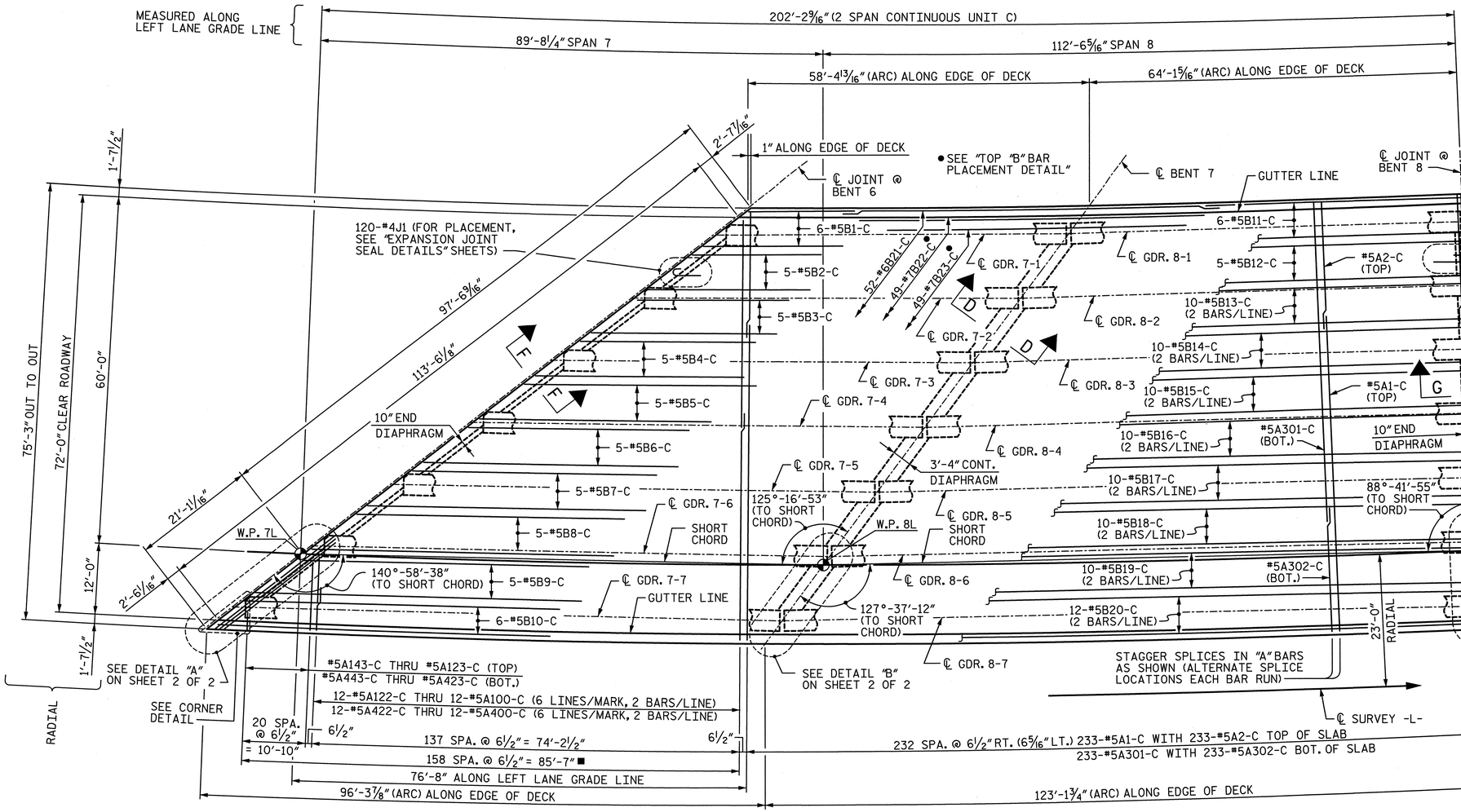

■ "A" BARS TO BE PLACED PARALLEL TO LAST RADIAL BAR

PLAN - UNIT C

FOR BOTTOM "B" BARS, SEE SHEET 2 OF 2

NOTES:

1. FOR CONCRETE BARRIER RAIL DIMENSIONS, REINFORCEMENT AND JOINT SPACING, SEE "PLAN OF RAILS" SHEETS.
2. FOR POURING SEQUENCE AND TRANSVERSE CONSTRUCTION JOINT IN DECK SLAB, SEE "DECK POUR DIAGRAMS" SHEET.
3. FOR SECTION VIEWS, SEE "SUPERSTRUCTURE DETAILS" SHEETS.
4. FOR "B" BAR SPACING AND LOCATION, SEE CORRESPONDING "TYPICAL SECTION" SHEET.
5. "A" BARS TO BE PLACED RADIALLY, UNLESS NOTED OTHERWISE.
6. FOR DRAINAGE SYSTEM, SEE "STRUCTURE DRAINAGE SYSTEM" SHEET.
7. FOR MINIMUM SPLICE LENGTHS, SEE "SUPERSTRUCTURE BILL OF MATERIAL".

NOTE: S10 BARS NOT SHOWN FOR CLARITY, SEE "TYPICAL SECTION" AND "SUPERSTRUCTURE DETAILS" SHEETS FOR DETAILS.

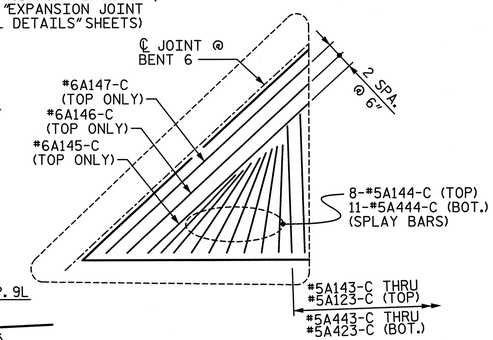

CORNER DETAIL

TOP BARS SHOWN, BOTTOM BARS SIMILAR

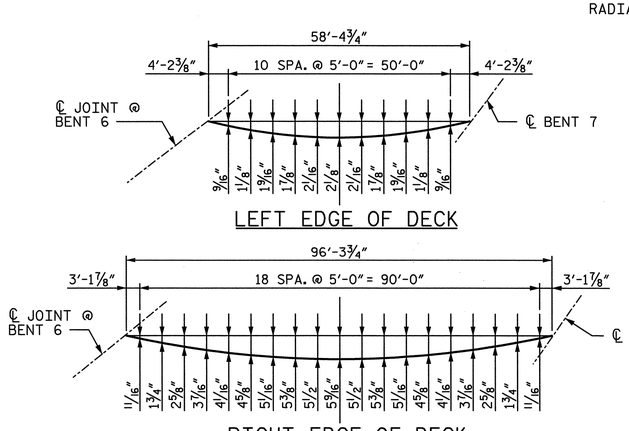

ARC OFFSETS - SPAN 7

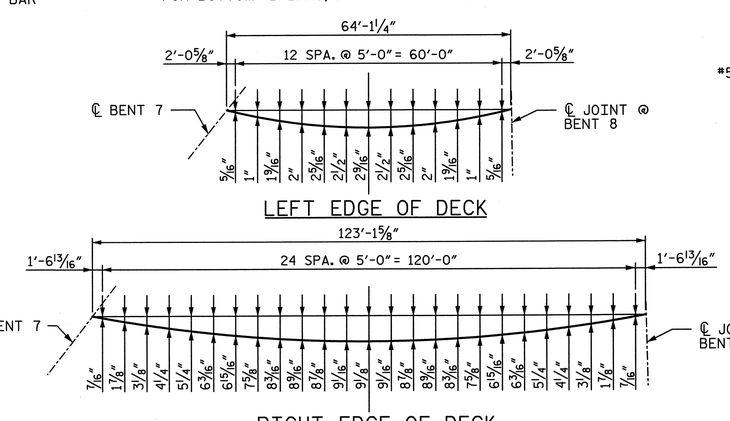

ARC OFFSETS - SPAN 8

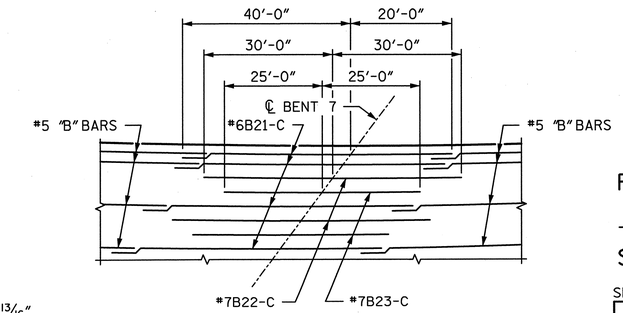

TOP "B" BAR PLACEMENT DETAIL

PROJECT NO. U-2524C

GUILFORD COUNTY

STATION: POT 407+73.35 -L-
= POT 29+32.06 -Y4-

SHEET 1 OF 2

STATE OF NORTH CAROLINA
DEPARTMENT OF TRANSPORTATION
RALEIGH

PLAN OF SPANS
UNIT C
SPANS 7 & 8

-LEFT LANE-

NORTH CAROLINA PROFESSIONAL SEAL 28479 ENGINEER KEVIN G. BAILEY 6-7-13

REVISIONS								SHEET NO.
NO.	BY:	DATE:	NO.	BY:	DATE:			S-54
1			3					TOTAL SHEETS
2			4					836

STV / Ralph Whitehead Associates, Inc.
1000 West Morehead St., Ste. 200
Charlotte, NC 28208
NC License No. F-0991

DRAWN BY : VMW	DATE : 8-12	DESIGN ENGINEER OF RECORD: A. PETER	DATE : 5-13
CHECKED BY : AJP	DATE : 10-12		

6/7/2013 10:32:40 AM R:\ustation\Finals\Plan of Spans_Spans 7-8_Sheet 1of 2.dgn

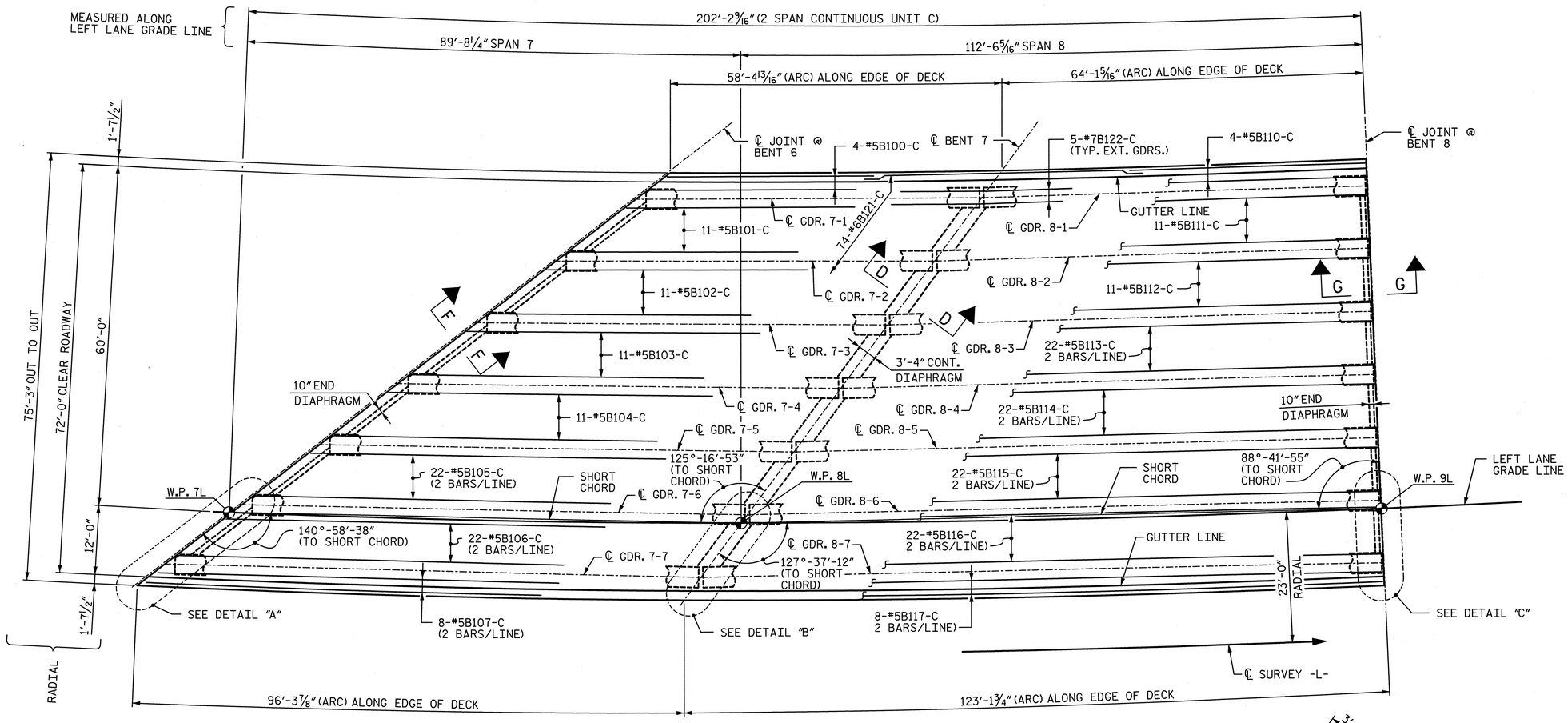

PLAN - UNIT C - BOTTOM "B" BARS

FOR ALL REMAINING SLAB STEEL, SEE SHEET 1 OF 2

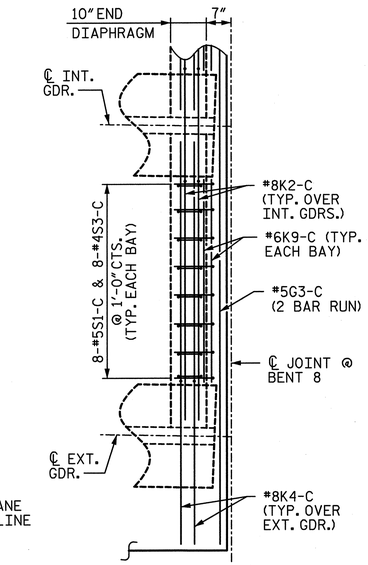

DETAIL "C"

END DIAPHRAGM AT BENT 8

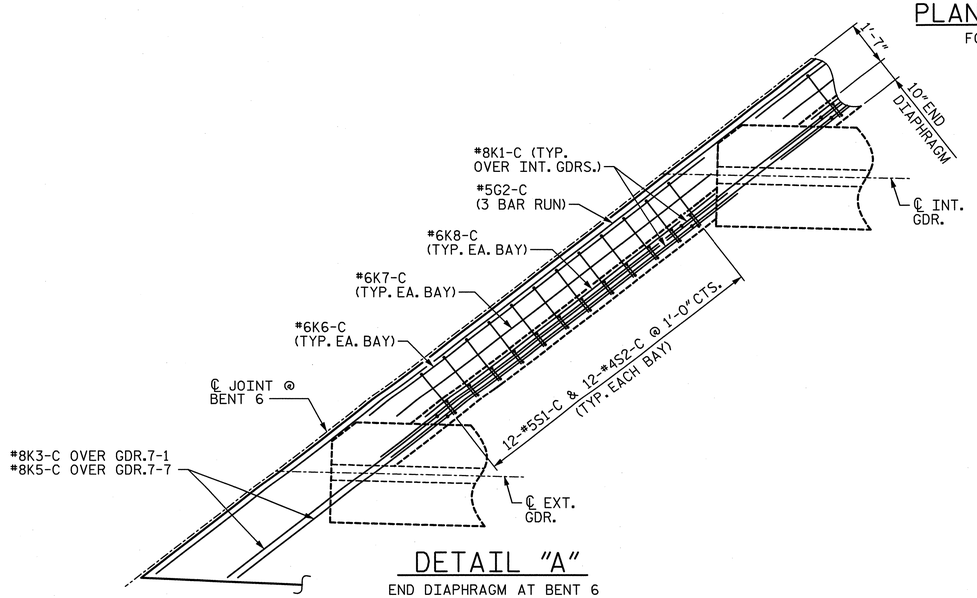

DETAIL "A"

END DIAPHRAGM AT BENT 6

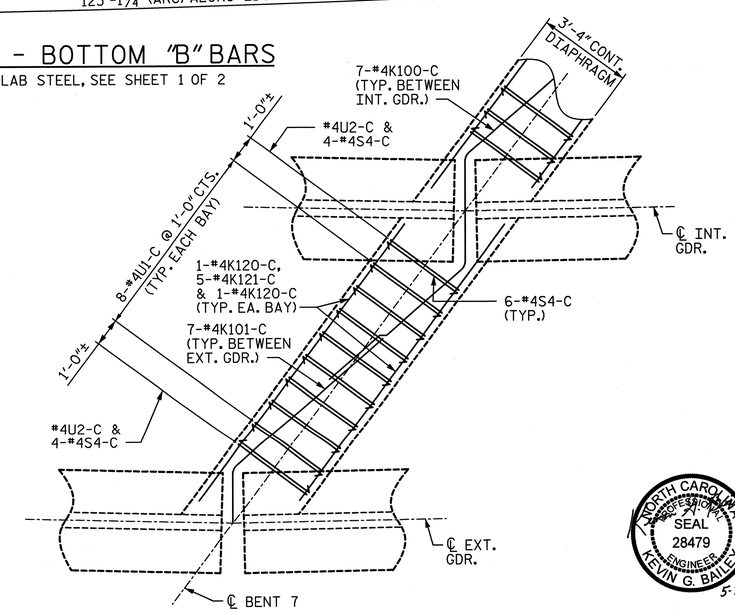

DETAIL "B"

CONTINUOUS DIAPHRAGM AT BENT 7

NORTH CAROLINA PROFESSIONAL SEAL 28479 ENGINEER KEVIN G. BAILEY 5-30-13

PROJECT NO. U-2524C

GUILFORD COUNTY

STATION: POT 407+73.35 -L-
= POT 29+32.06 -Y4-

SHEET 2 OF 2

STATE OF NORTH CAROLINA
DEPARTMENT OF TRANSPORTATION
RALEIGH

PLAN OF SPANS
UNIT C
SPANS 7 & 8

-LEFT LANE-

DRAWN BY : VMW	DATE : 8-12	DESIGN ENGINEER OF RECORD: A. PETER	DATE : 5-13
CHECKED BY : AJP	DATE : 10-12		

STV / Ralph Whitehead Associates, Inc.
1000 West Morehead St., Ste. 200
Charlotte, NC 28208
NC License No. F-0991

REVISIONS							
NO.	BY:	DATE:	NO.	BY:	DATE:	SHEET NO. S-55	
1			3			TOTAL SHEETS 836	
2			4				

R:\Ustation\Finals\Plan of Spans_Spans 7-8_Sheet 2 of 2.dgn 4:51:29 PM 5/30/2013

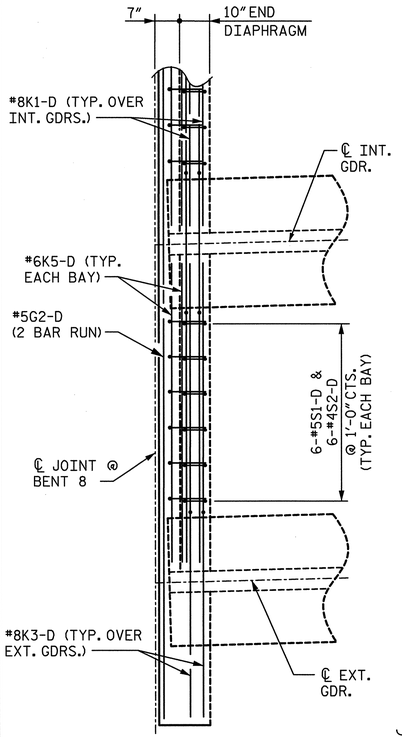

DETAIL "A"

END DIAPHRAGM AT BENT 8

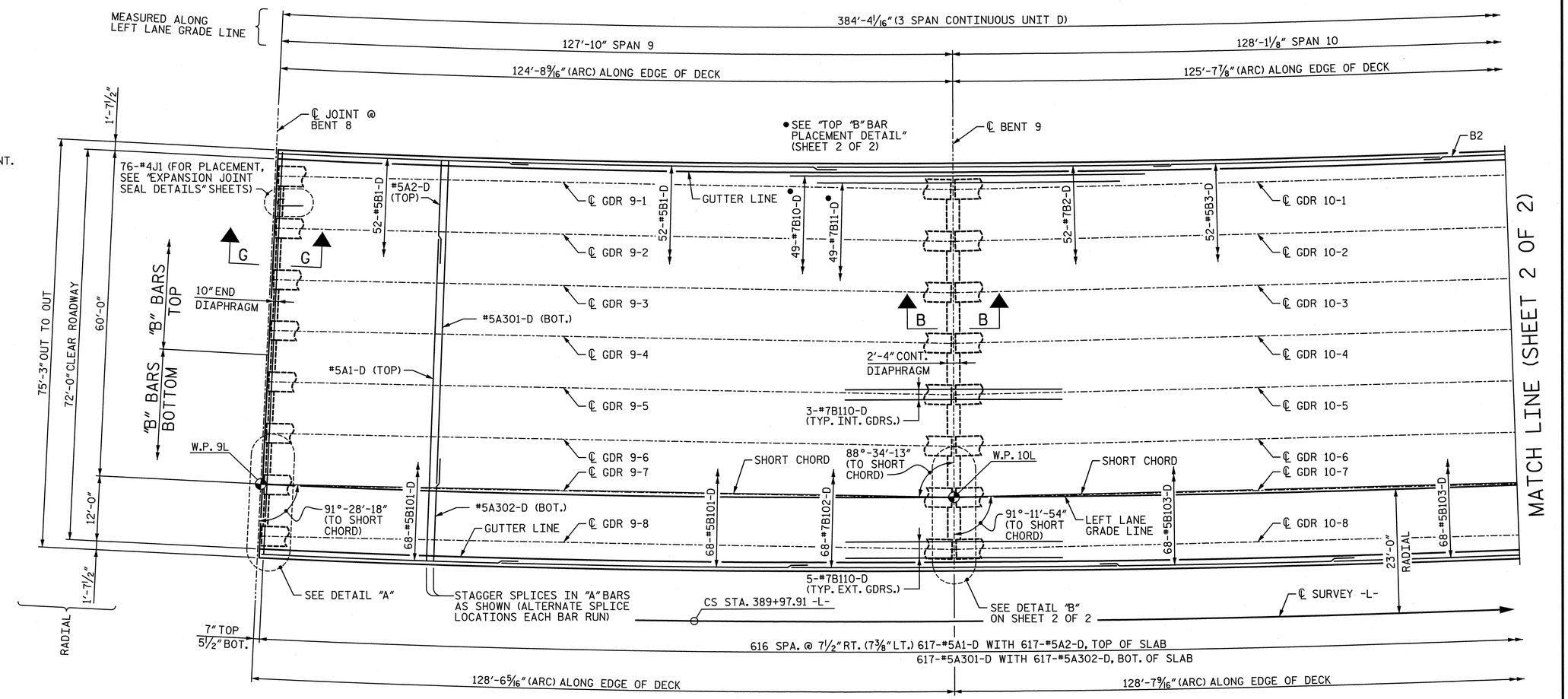

PLAN - UNIT D

NOTE: S10 BARS NOT SHOWN FOR CLARITY, SEE "TYPICAL SECTION" AND "SUPERSTRUCTURE DETAILS" SHEETS FOR DETAILS.

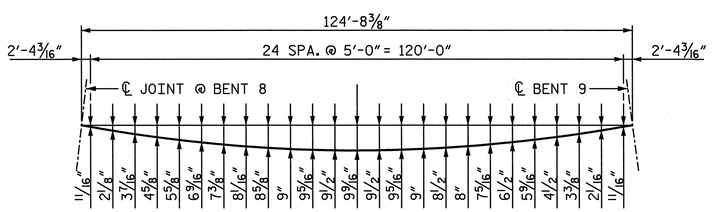

LEFT EDGE OF DECK

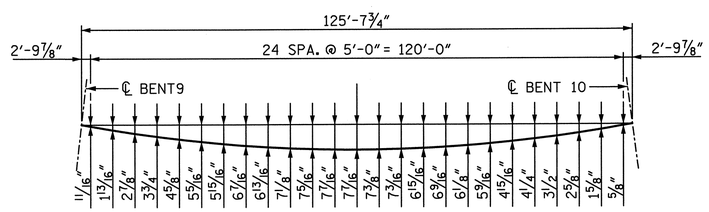

LEFT EDGE OF DECK

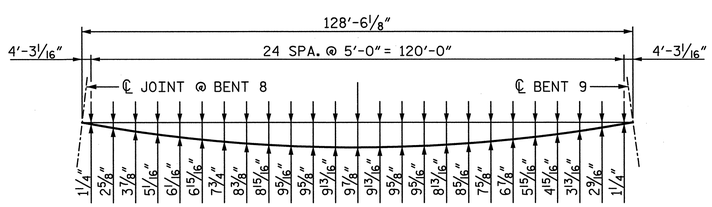

RIGHT EDGE OF DECK

ARC OFFSETS - SPAN 9

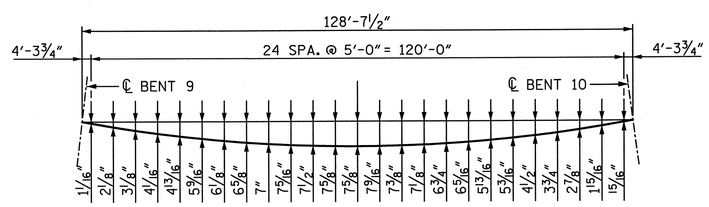

RIGHT EDGE OF DECK

ARC OFFSETS - SPAN 10

NOTES:

1. FOR CONCRETE BARRIER RAIL DIMENSIONS, REINFORCEMENT AND JOINT SPACING, SEE "PLAN OF RAILS" SHEETS.
2. FOR POURING SEQUENCE AND TRANSVERSE CONSTRUCTION JOINT IN DECK SLAB, SEE "DECK POUR DIAGRAMS" SHEET.
3. FOR SECTION VIEWS, SEE "SUPERSTRUCTURE DETAILS" SHEETS.
4. FOR "B" BAR REINFORCING LAYOUT, SPACING AND LOCATION, SEE CORRESPONDING "TYPICAL SECTION" SHEET.
5. "A" BARS TO BE PLACED RADIALLY.
6. FOR DRAINAGE SYSTEM, SEE "STRUCTURE DRAINAGE SYSTEM" SHEETS.
7. FOR MINIMUM SPLICE LENGTHS, SEE "SUPERSTRUCTURE BILL OF MATERIAL".

NORTH CAROLINA PROFESSIONAL SEAL 28479 ENGINEER KEVIN G. BAILEY 6-7-13

PROJECT NO. U-2524C
GUILFORD COUNTY
STATION: POT 407+73.35 -L-
= POT 29+32.06 -Y4-

SHEET 1 OF 2

STATE OF NORTH CAROLINA
DEPARTMENT OF TRANSPORTATION
RALEIGH

PLAN OF SPANS
UNIT D
SPANS 9-11

-LEFT LANE-

STV / Ralph Whitehead Associates, Inc.
1000 West Morehead St., Ste. 200
Charlotte, NC 28208
NC License No. F-0991

REVISIONS						SHEET NO.
NO.	BY:	DATE:	NO.	BY:	DATE:	S-56
1			3			TOTAL SHEETS
2			4			836

DRAWN BY : ACA	DATE : 7-12	DESIGN ENGINEER OF RECORD: A. PETER	DATE : 5-13
CHECKED BY : AJP	DATE : 11-12		

6/7/2013 10:32:45 AM R:\ustation\Finals\Plan of Spans_Spans 9-11_Sheet 1of 2.dgn

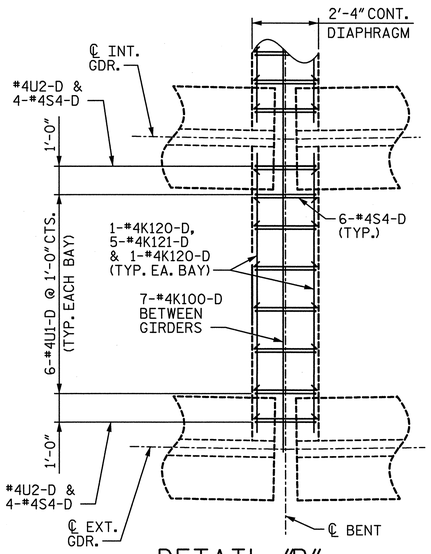

DETAIL "B"

CONTINUOUS DIAPHRAGM AT BENT 9 & 10

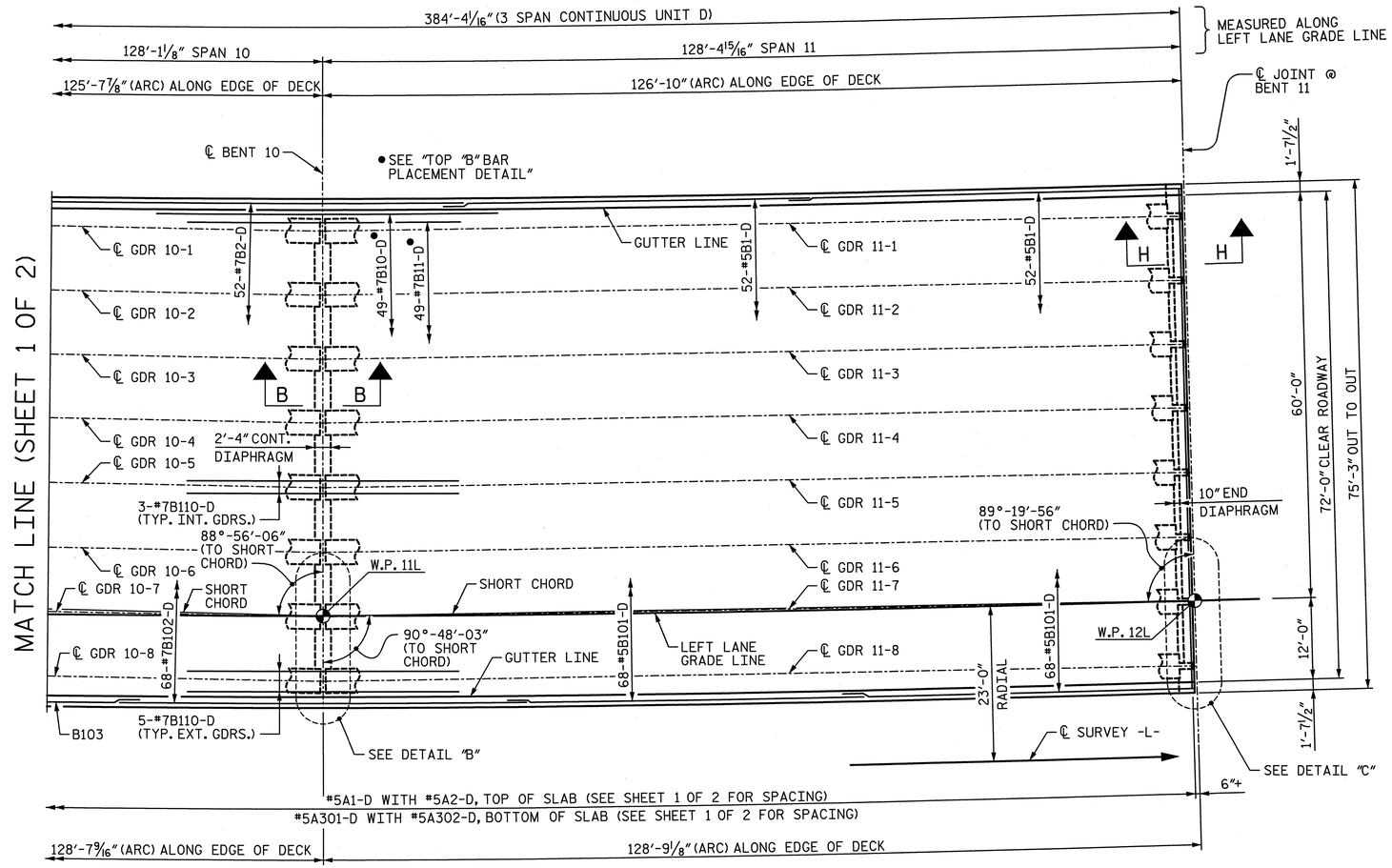

NOTE: S10 BARS NOT SHOWN FOR CLARITY, SEE "TYPICAL SECTION" AND "SUPERSTRUCTURE DETAILS" SHEETS FOR DETAILS.

PLAN - UNIT D

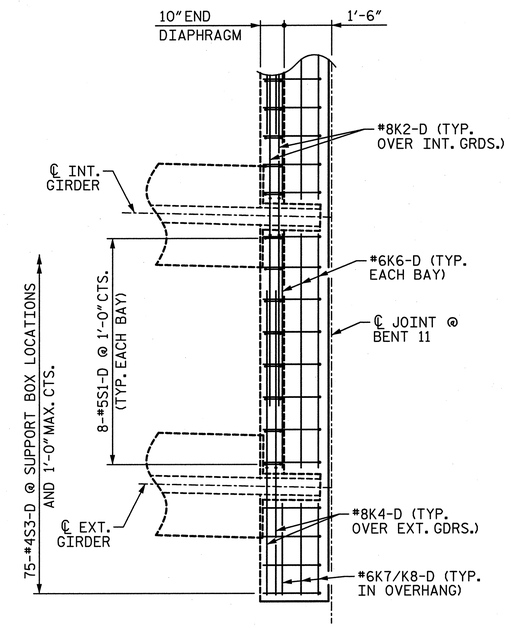

DETAIL "C"

END DIAPHRAGM AT BENT 11

(G1 BARS NOT SHOWN FOR CLARITY, SEE CORRESPONDING "TYPICAL SECTION" SHEET FOR PLACEMENT AND LOCATION.)

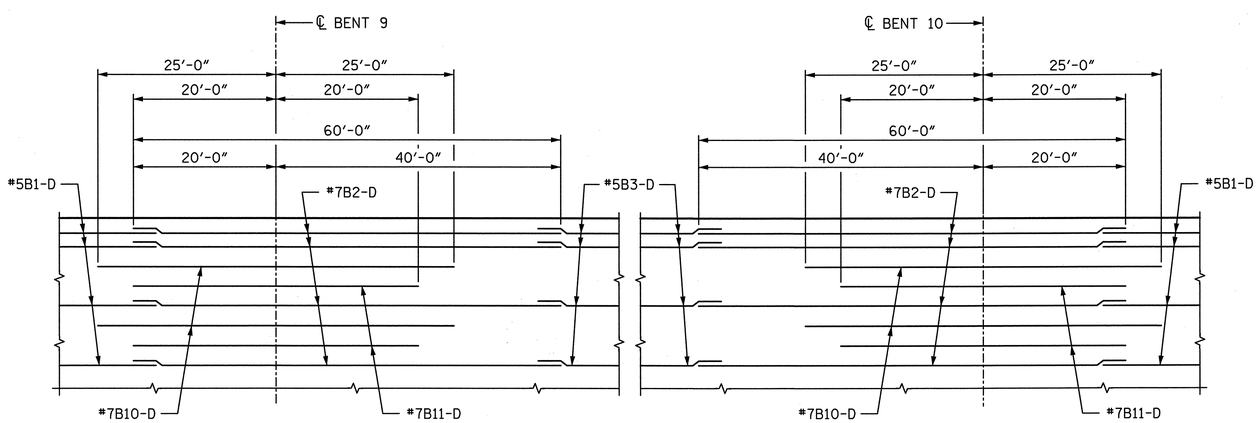

TOP "B" BAR PLACEMENT DETAIL

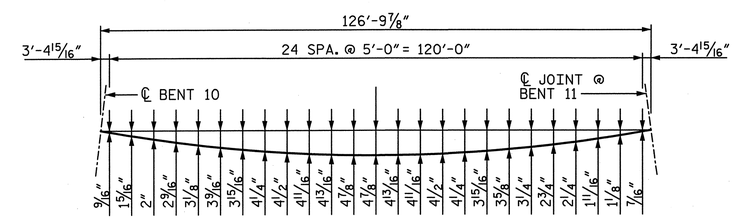

LEFT EDGE OF DECK

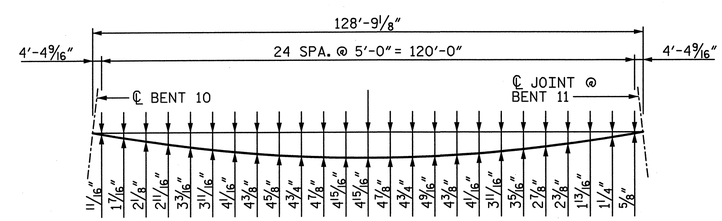

RIGHT EDGE OF DECK

ARC OFFSETS - SPAN 11

NORTH CAROLINA PROFESSIONAL SEAL 28479 ENGINEER KEVIN G. BAILEY 6-7-13

PROJECT NO. U-2524C

GUILFORD COUNTY

STATION: POT 407+73.35 -L-
= POT 29+32.06 -Y4-

SHEET 2 OF 2

STATE OF NORTH CAROLINA
DEPARTMENT OF TRANSPORTATION
RALEIGH

PLAN OF SPANS
UNIT D
SPANS 9-11

-LEFT LANE-

DRAWN BY : ACA	DATE : 7-12	DESIGN ENGINEER OF RECORD: A. PETER	DATE : 5-13
CHECKED BY : AJP	DATE : 11-12		

STV / Ralph Whitehead Associates, Inc.
1000 West Morehead St., Ste. 200
Charlotte, NC 28208
NC License No. F-0991

REVISIONS						SHEET NO.
NO.	BY:	DATE:	NO.	BY:	DATE:	S-57
1			3			TOTAL SHEETS
2			4			836

R:\ustation\Finals\Plan of Spans_Spans 9-11_Sheet 2 of 2.dgn 1:59:21 PM 6/7/2013

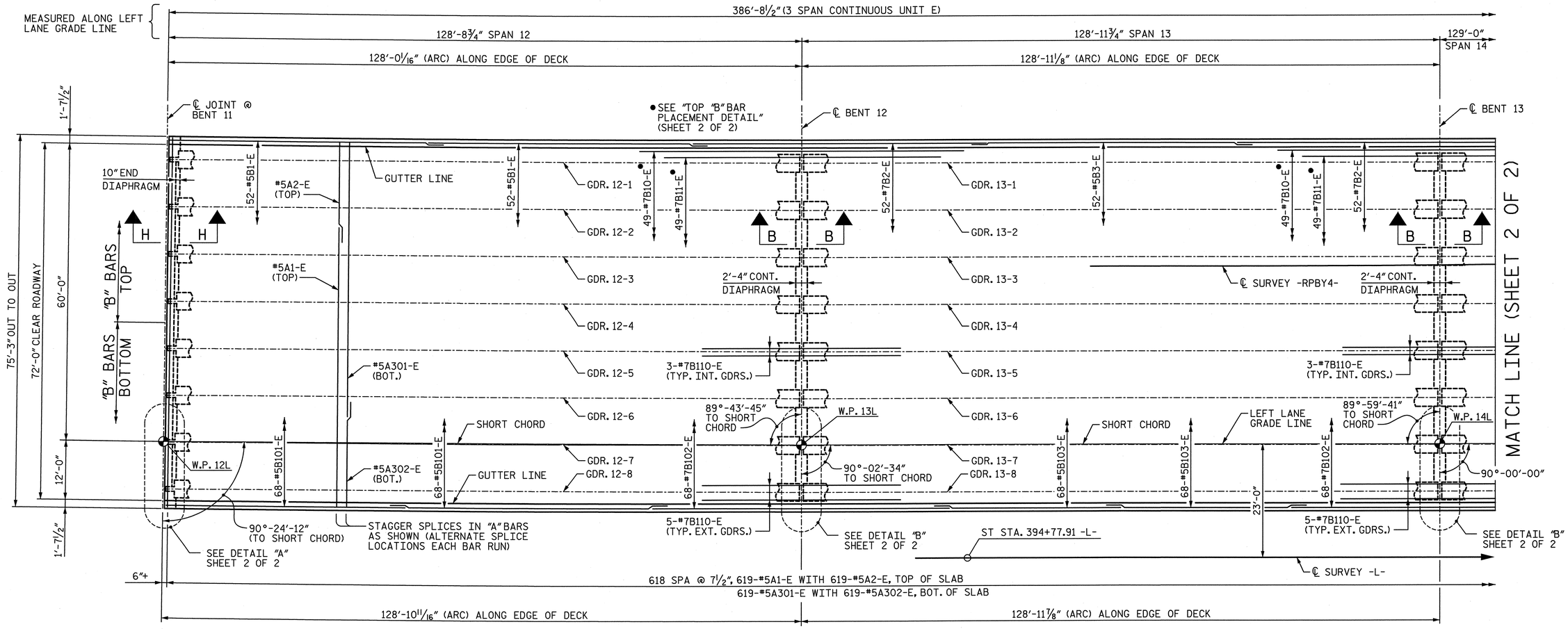

PLAN - UNIT E

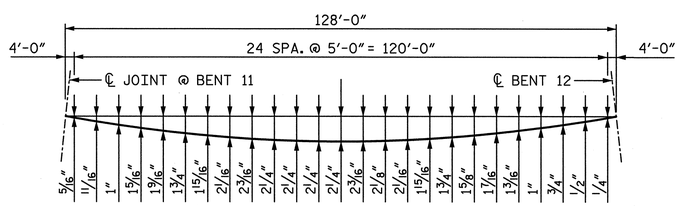

LEFT EDGE OF DECK

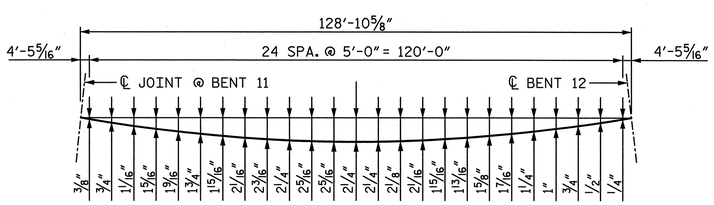

RIGHT EDGE OF DECK

ARC OFFSETS - SPAN 12

NOTES:

1. FOR CONCRETE BARRIER RAIL DIMENSIONS, REINFORCEMENT AND JOINT SPACING, SEE "PLAN OF RAILS" SHEETS.
2. FOR POURING SEQUENCE AND TRANSVERSE CONSTRUCTION JOINT IN DECK SLAB, SEE "DECK POUR DIAGRAMS" SHEET.
3. FOR SECTION VIEWS, SEE "SUPERSTRUCTURE DETAILS" SHEETS.
4. FOR "B" BAR REINFORCING LAYOUT, SPACING AND LOCATION, SEE CORRESPONDING "TYPICAL SECTION" SHEET.
5. FOR DRAINAGE SYSTEM, SEE "STRUCTURE DRAINAGE SYSTEM" SHEETS.
6. FOR MINIMUM SPLICE LENGTHS, SEE "SUPERSTRUCTURE BILL OF MATERIAL".
7. ARC OFFSETS FOR LEFT AND RIGHT EDGE OF DECK FOR SPAN 13 ARE NEGLIGIBLE.

PROJECT NO. U-2524C
GUILFORD COUNTY
STATION: POT 407+73.35 -L-
= POT 29+32.06 -Y4-
SHEET 1 OF 2

NORTH CAROLINA PROFESSIONAL SEAL 28479 ENGINEER KEVIN G. BAILEY
5-30-13

STATE OF NORTH CAROLINA
DEPARTMENT OF TRANSPORTATION
RALEIGH

PLAN OF SPANS
UNIT E
SPANS 12-14

-LEFT LANE-

STV / Ralph Whitehead Associates, Inc.
1000 West Morehead St., Ste. 200
Charlotte, NC 28208
NC License No. F-0991

REVISIONS						SHEET NO.
NO.	BY:	DATE:	NO.	BY:	DATE:	S-58
1			3			TOTAL SHEETS
2			4			836

DRAWN BY : ACA	DATE : 8-12	DESIGN ENGINEER OF RECORD: A. PETER	DATE : 5-13
CHECKED BY : AJP	DATE : 11-12		

5/30/2013 9:00:03 PM R:\station\Finals\Plan of Spans_Spans 12-14_Sheet 1 of 2.dgn

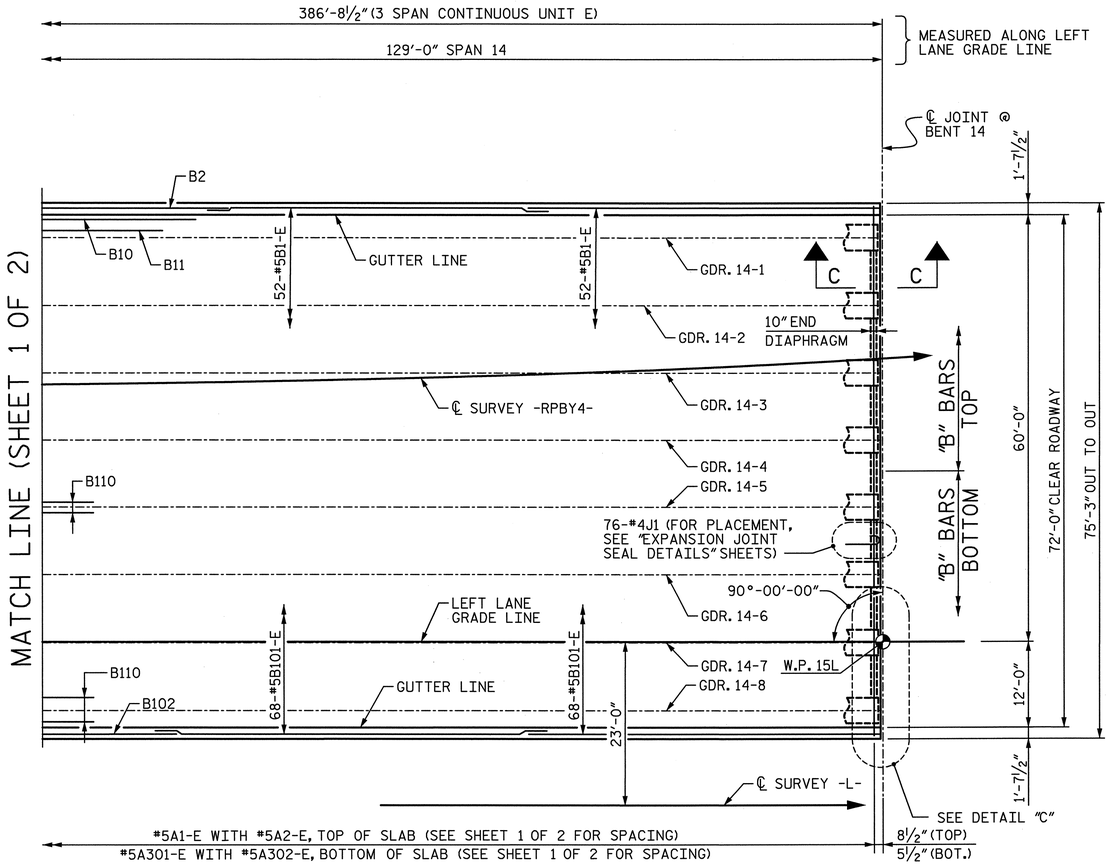

PLAN - UNIT E

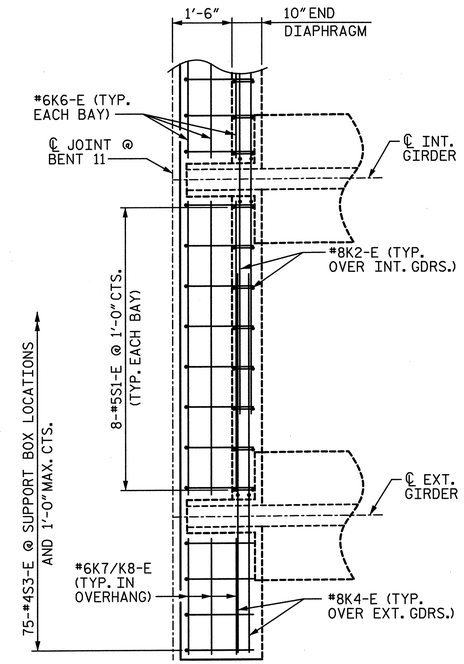

DETAIL "A"

END DIAPHRAGM AT BENT 11
(G1 BARS NOT SHOWN FOR CLARITY, SEE CORRESPONDING "TYPICAL SECTION" SHEET FOR PLACEMENT AND LOCATION.)

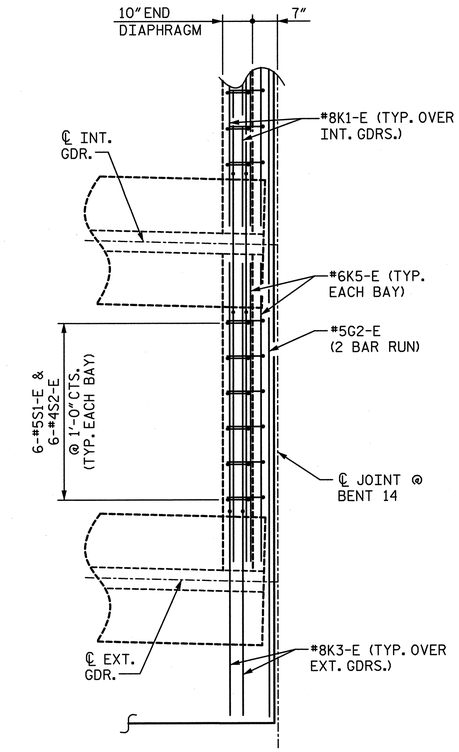

DETAIL "C"

END DIAPHRAGM AT BENT 14

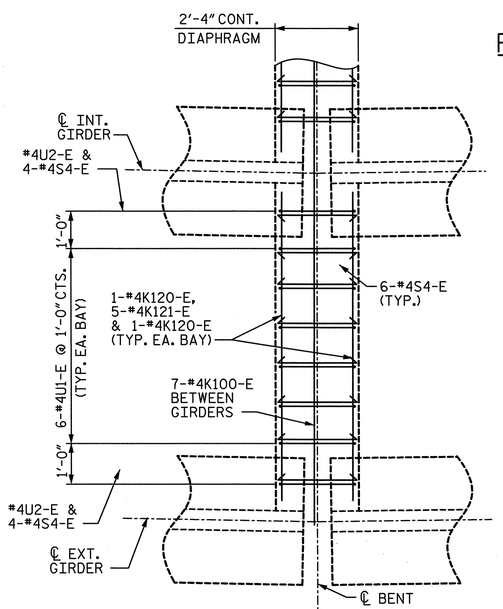

DETAIL "B"

CONTINUOUS DIAPHRAGM AT BENT 12 & 13

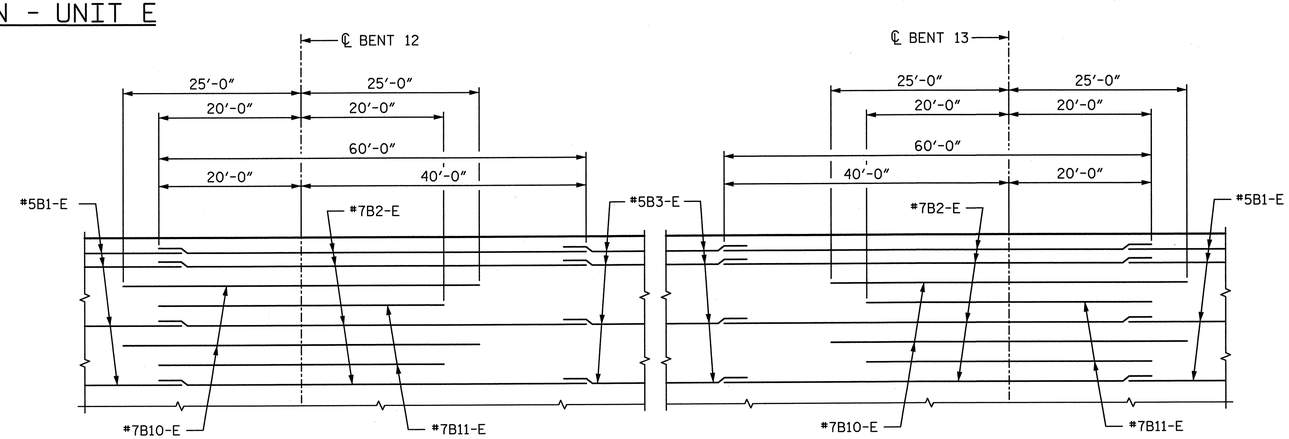

TOP "B" BAR PLACEMENT DETAIL

PROJECT NO. U-2524C
GUILFORD COUNTY
STATION: POT 407+73.35 -L-
= POT 29+32.06 -Y4-
SHEET 2 OF 2

STATE OF NORTH CAROLINA
DEPARTMENT OF TRANSPORTATION
RALEIGH

PLAN OF SPANS
UNIT E
SPANS 12-14

-LEFT LANE-

NORTH CAROLINA PROFESSIONAL SEAL 28479 ENGINEER KEVIN G. BAILEY 6-7-13

STV/ Ralph Whitehead Associates, Inc.
1000 West Morehead St., Ste. 200
Charlotte, NC 28208
NC License No. F-0991

REVISIONS						SHEET NO.
NO.	BY:	DATE:	NO.	BY:	DATE:	S-59
1			3			TOTAL SHEETS
2			4			836

DRAWN BY : ACA	DATE : 8-12	DESIGN ENGINEER OF RECORD: A. PETER	DATE : 5-13
CHECKED BY : AJP	DATE : 11-12		

6/7/2013 10:32:54 AM R:\ustation\Finals\Plan of Spans_Spans 12-14_Sheet 2 of 2.dgn

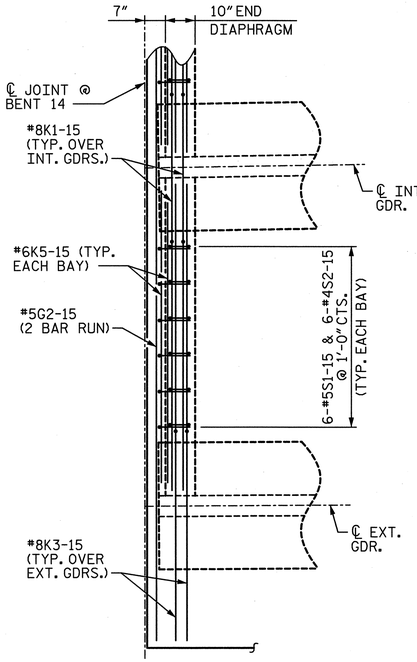

DETAIL "A"

END DIAPHRAGM AT BENT 14

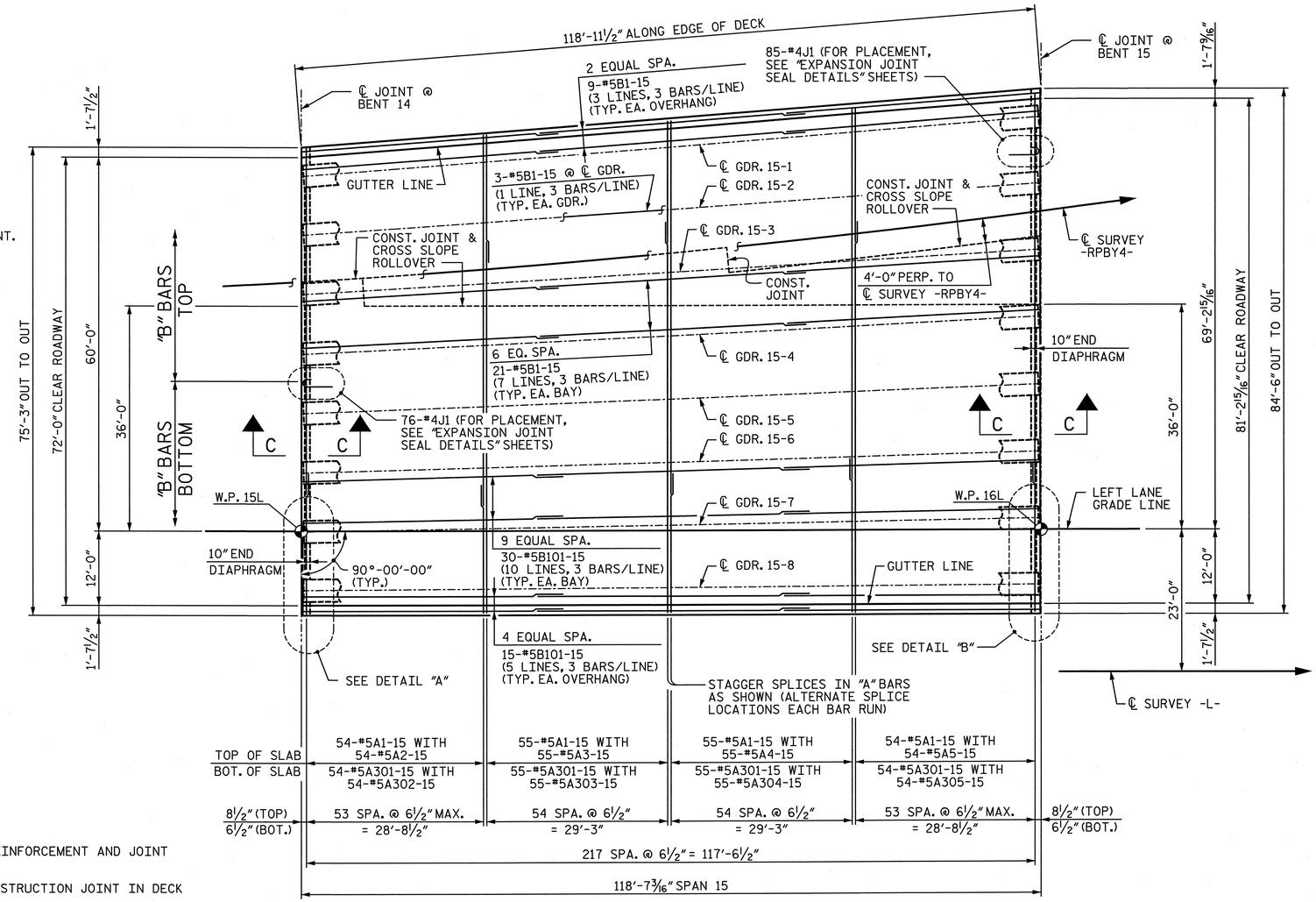

PLAN - SPAN 15

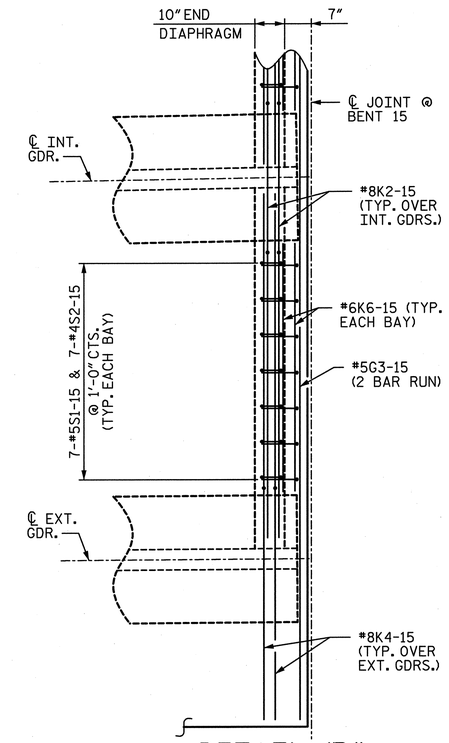

DETAIL "B"

END DIAPHRAGM AT BENT 15

NOTES:

1. FOR CONCRETE BARRIER RAIL DIMENSIONS, REINFORCEMENT AND JOINT SPACING, SEE "PLAN OF RAILS" SHEETS.
2. FOR POURING SEQUENCE AND TRANSVERSE CONSTRUCTION JOINT IN DECK SLAB, SEE "DECK POUR DIAGRAMS" SHEET.
3. FOR SECTION VIEWS, SEE "SUPERSTRUCTURE DETAILS" SHEETS.
4. FOR "B" BAR SPACING AND LOCATION, SEE CORRESPONDING "TYPICAL SECTION" SHEET.
5. FOR DRAINAGE SYSTEM, SEE "STRUCTURE DRAINAGE SYSTEM" SHEETS.
6. FOR MINIMUM SPLICE LENGTHS, SEE "SUPERSTRUCTURE BILL OF MATERIAL".
7. FOR CONSTRUCTION JOINT AND POUR LOCATIONS, SEE "TRANSITION ZONE DETAILS" SHEETS.

PROJECT NO. U-2524C

GUILFORD COUNTY

STATION: POT 407+73.35 -L-
= POT 29+32.06 -Y4-

NORTH CAROLINA PROFESSIONAL SEAL 28479 ENGINEER KEVIN G. BAILEY 5-30-13

STATE OF NORTH CAROLINA
DEPARTMENT OF TRANSPORTATION
RALEIGH

PLAN OF SPANS
SPAN 15

-LEFT LANE-

REVISIONS								SHEET NO.
NO.	BY:	DATE:	NO.	BY:	DATE:			S-60
1			3					TOTAL SHEETS
2			4					836

STV / Ralph Whitehead Associates, Inc.
1000 West Morehead St., Ste. 200
Charlotte, NC 28208
NC License No. F-0991

DRAWN BY : VMW/ACA	DATE : 8-12	DESIGN ENGINEER OF RECORD: A. PETER	DATE : 5-13
CHECKED BY : AJP	DATE : 1-13		

5/30/2013 8:59:54 PM R:\ustation\Finals\Plan of Spans_Spans 15 (Scale 3.32).dgn

NOTES:

1. FOR CONCRETE BARRIER RAIL DIMENSIONS, REINFORCEMENT AND JOINT SPACING, SEE "PLAN OF RAILS" SHEETS.
2. FOR POURING SEQUENCE AND TRANSVERSE CONSTRUCTION JOINT IN DECK SLAB, SEE "DECK POUR DIAGRAMS" SHEET.
3. FOR SECTION VIEWS, SEE "SUPERSTRUCTURE DETAILS" SHEETS.
4. FOR CONSTRUCTION JOINTS AND POUR LOCATIONS, SEE "TRANSITION ZONE DETAILS" SHEET.
5. FOR DRAINAGE SYSTEM, SEE "STRUCTURE DRAINAGE SYSTEM" SHEETS.
6. FOR MINIMUM SPLICE LENGTHS, SEE "SUPERSTRUCTURE BILL OF MATERIAL".
7. FIELD BEND DECK BARS IN GORE AREA AS NECESSARY TO MAINTAIN CLEARANCES IN SLAB.

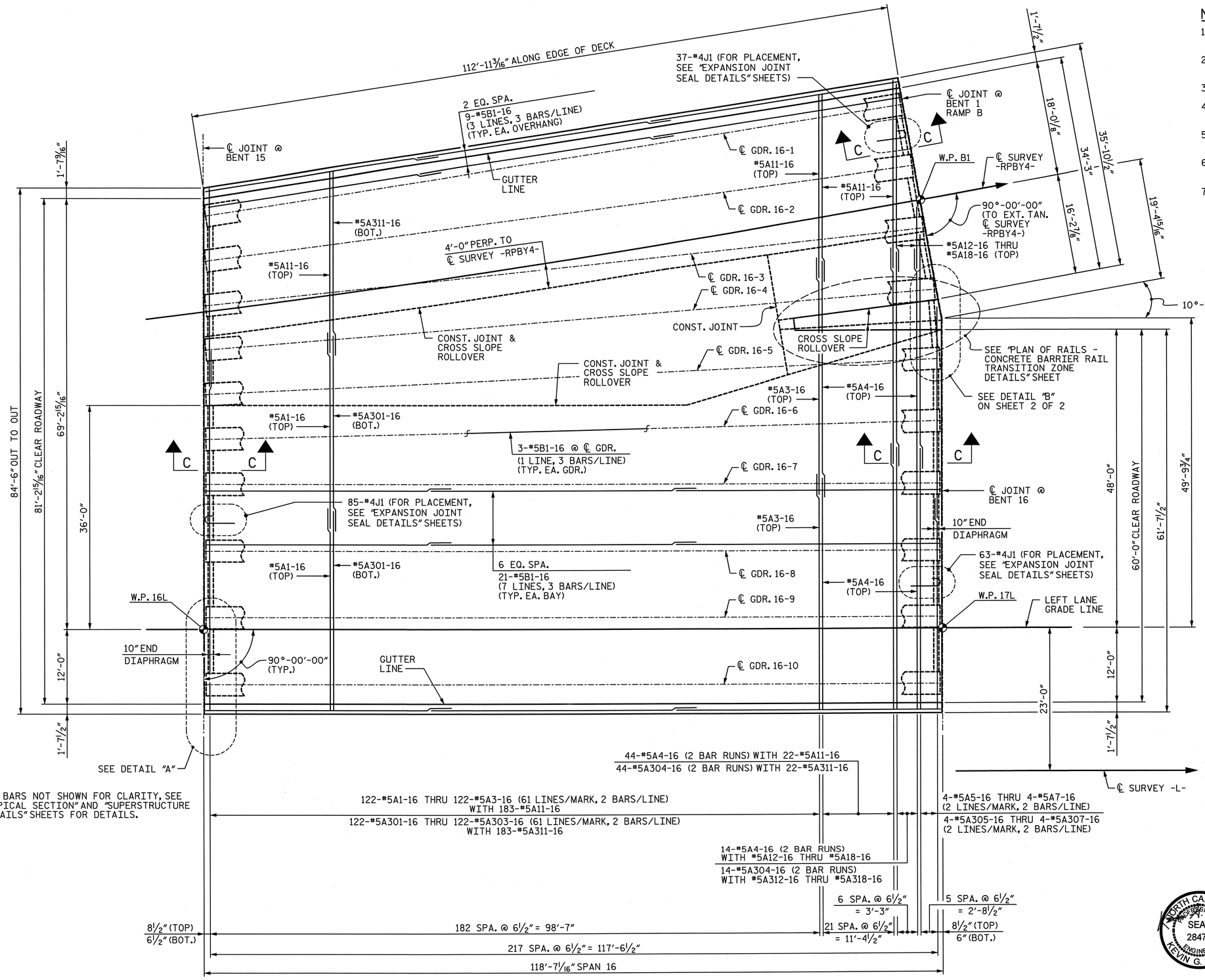

NOTE: S10 BARS NOT SHOWN FOR CLARITY, SEE "TYPICAL SECTION" AND "SUPERSTRUCTURE DETAILS" SHEETS FOR DETAILS.

PLAN - SPAN 16

FOR BOTTOM "B" BARS AND DIAPHRAGM BARS, SEE SHEET 2 OF 2

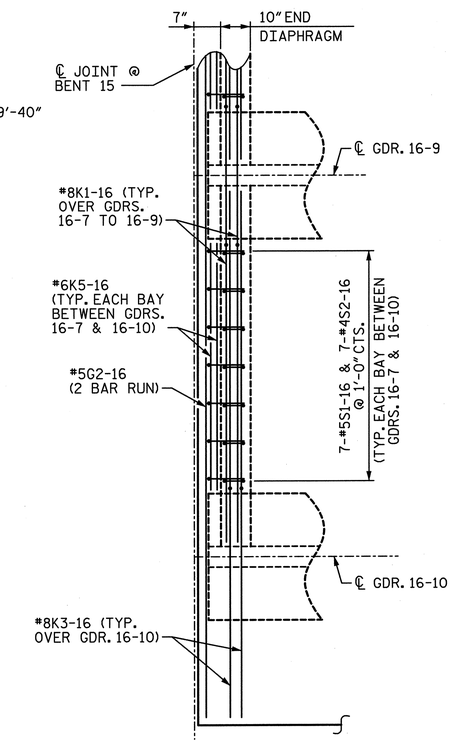

DETAIL "A"

END DIAPHRAGM AT BENT 15 (BENT 16 SIMILAR)

PROJECT NO. U-2524C

GUILFORD COUNTY

STATION: POT 407+73.35 -L-
= POT 29+32.06 -Y4-

SHEET 1 OF 2

STATE OF NORTH CAROLINA
DEPARTMENT OF TRANSPORTATION
RALEIGH

PLAN OF SPANS
SPAN 16

-LEFT LANE-

NORTH CAROLINA PROFESSIONAL SEAL 28479 ENGINEER KEVIN G. BAILEY 6-7-13

STV/ Ralph Whitehead Associates, Inc.
1000 West Morehead St., Ste. 200
Charlotte, NC 28208
NC License No. F-0991

REVISIONS							SHEET NO.
NO.	BY:	DATE:	NO.	BY:	DATE:		S-61
1			3				TOTAL SHEETS
2			4				836

DRAWN BY : ACA	DATE : 12-12	DESIGN ENGINEER OF RECORD: A. PETER	DATE : 5-13
CHECKED BY : AJP	DATE : 1-13		

6/7/2013 10:32:58 AM R:\ustation\Finals\Plan of Spans_Spans 16_Sheet 1of 2 (Scale 1_8).dgn

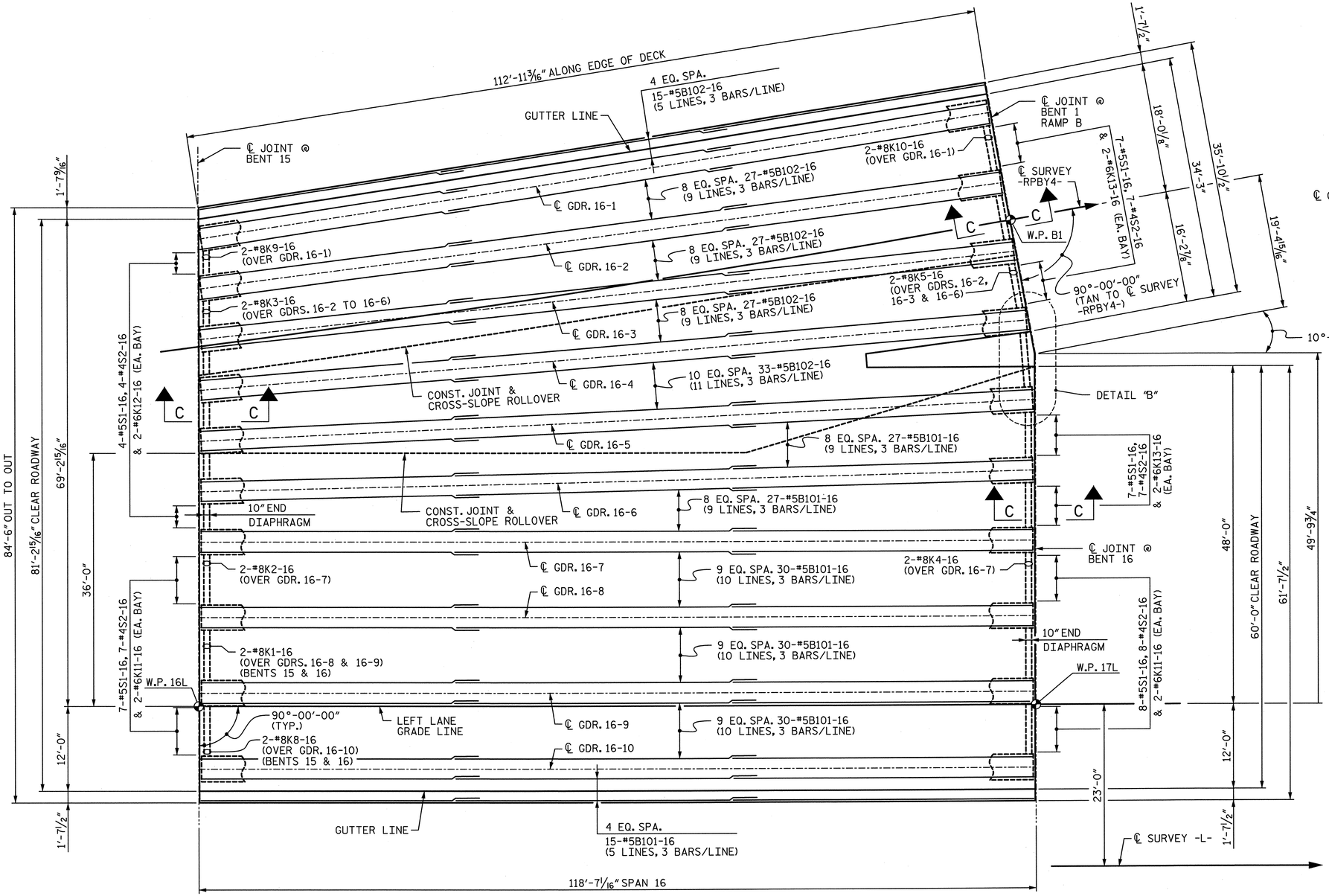

PLAN - SPAN 16 - BOTTOM "B" BARS

FOR ALL REMAINING SLAB STEEL, SEE SHEET 1 OF 2
DIAPHRAGM BARS NOT SHOWN FOR CLARITY

NOTES:

1. FOR NOTES, SEE SHEET 1 OF 2.

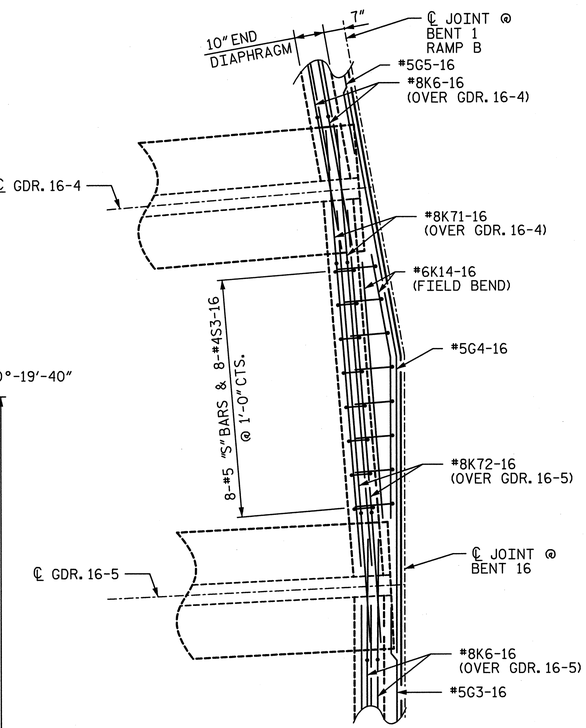

DETAIL "B"

END DIAPHRAGM AT BENT 16
(FOR ADDITIONAL INFORMATION, SEE
"TRANSITION ZONE END DIAPHRAGM" DETAIL
ON "TYPICAL SECTION SPAN 16")

PROJECT NO. U-2524C
GUILFORD COUNTY
STATION: POT 407+73.35 -L-
= POT 29+32.06 -Y4-

SHEET 2 OF 2

STATE OF NORTH CAROLINA
DEPARTMENT OF TRANSPORTATION
RALEIGH

PLAN OF SPANS
SPAN 16

-LEFT LANE-

NORTH CAROLINA PROFESSIONAL SEAL 28479 ENGINEER KEVIN G. BAILEY
5-30-13

DRAWN BY : ACA	DATE : 12-12	DESIGN ENGINEER OF RECORD: A. PETER	DATE : 5-13
CHECKED BY : AJP	DATE : 1-13		

STV / Ralph Whitehead Associates, Inc.
1000 West Morehead St., Ste. 200
Charlotte, NC 28208
NC License No. F-0991

REVISIONS							SHEET NO.
NO.	BY:	DATE:	NO.	BY:	DATE:		S-62
1			3				TOTAL SHEETS
2			4				836

5/30/2013 4:52:00 PM R:\station\Finals\Plan of Spans_Spans 16_Sheet 2 of 2 (Scale 1.8).dgn

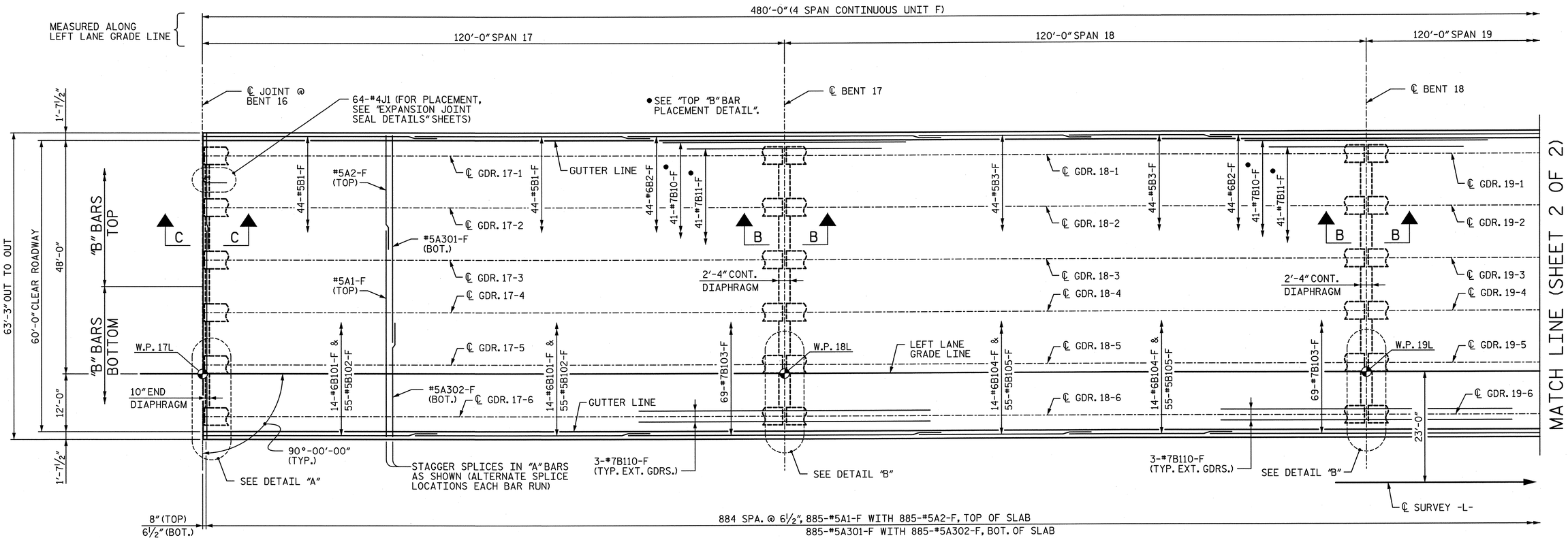

PLAN - UNIT F

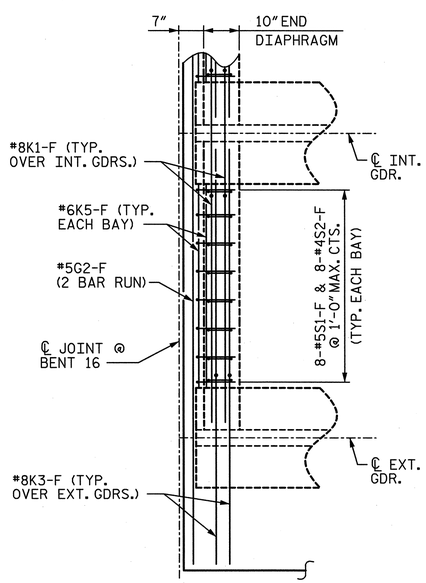

DETAIL "A"

END DIAPHRAGM AT BENT 16

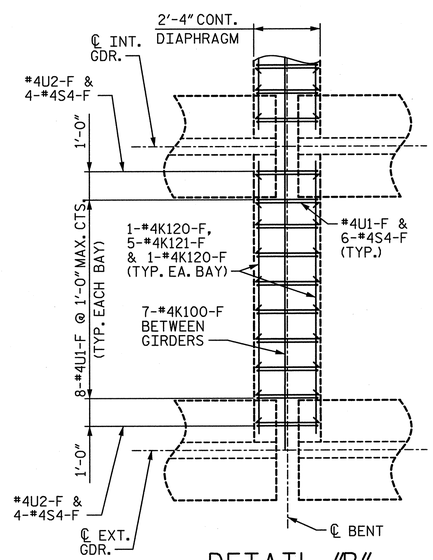

DETAIL "B"

CONTINUOUS DIAPHRAGM AT BENT (S7 BARS IN GDR. ENDS NOT SHOWN FOR CLARITY)

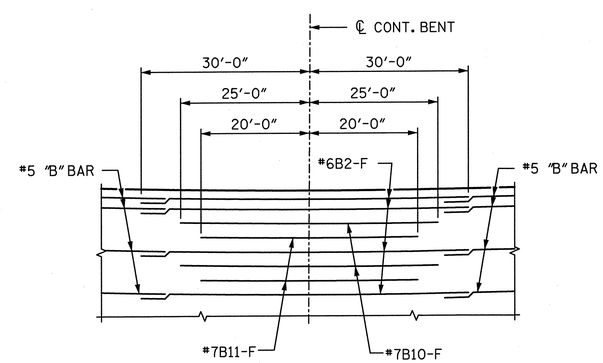

TOP "B" BAR PLACEMENT DETAIL

NOTES:

1. FOR CONCRETE BARRIER RAIL DIMENSIONS, REINFORCEMENT AND JOINT SPACING, SEE "PLAN OF RAILS" SHEETS.
2. FOR POURING SEQUENCE AND TRANSVERSE CONSTRUCTION JOINT IN DECK SLAB, SEE "DECK POUR DIAGRAMS" SHEET.
3. FOR SECTION VIEWS, SEE "SUPERSTRUCTURE DETAILS" SHEETS.
4. FOR "B" BAR SPACING AND LOCATION, SEE CORRESPONDING "TYPICAL SECTION" SHEET.
5. FOR DRAINAGE SYSTEM, SEE "STRUCTURE DRAINAGE SYSTEM" SHEET.
6. FOR MINIMUM SPLICE LENGTHS, SEE "SUPERSTRUCTURE BILL OF MATERIAL".

PROJECT NO. U-2524C
GUILFORD COUNTY
STATION: POT 407+73.35 -L-
= POT 29+32.06 -Y4-
SHEET 1 OF 2

NORTH CAROLINA PROFESSIONAL SEAL 28479 ENGINEER KEVIN G. BAILEY 5-30-13

STATE OF NORTH CAROLINA
DEPARTMENT OF TRANSPORTATION
RALEIGH

PLAN OF SPANS
UNIT F
SPANS 17-20

-LEFT LANE-

REVISIONS								SHEET NO.
NO.	BY:	DATE:	NO.	BY:	DATE:			S-63
1			3					TOTAL SHEETS
2			4					836

STV / Ralph Whitehead Associates, Inc.
1000 West Morehead St. Ste. 200
Charlotte, NC 28208
NC License No. F-0991

DRAWN BY : VMW	DATE : 8-12	DESIGN ENGINEER OF RECORD: A. PETER	DATE : 5-13
CHECKED BY : AJP	DATE : 8-12		

5/30/2013 8:59:49 PM R:\ustation\Finals\Plan of Spans_Spans 17-20_Sheet 1of 2.dgn

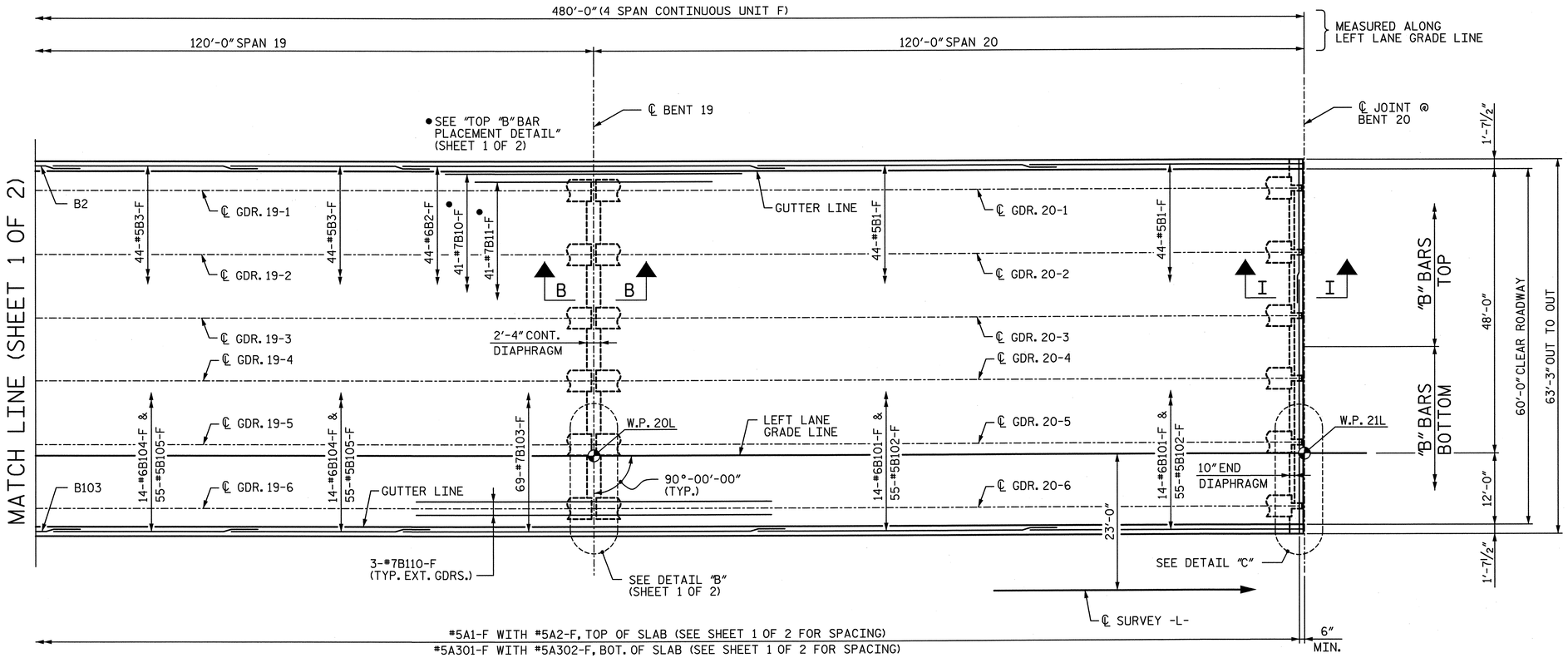

PLAN - UNIT F

NOTES:

1. FOR NOTES, SEE SHEET 1 OF 2.

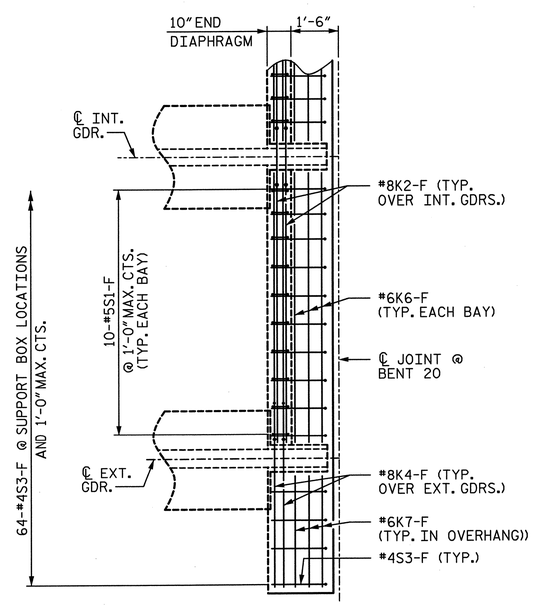

DETAIL "C"

END DIAPHRAGM AT BENT 20
(G1 BARS NOT SHOWN FOR CLARITY, SEE CORRESPONDING "TYPICAL SECTION" SHEET FOR PLACEMENT AND LOCATION.)

PROJECT NO. U-2524C
GUILFORD COUNTY
STATION: POT 407+73.35 -L-
= POT 29+32.06 -Y4-

SHEET 2 OF 2

STATE OF NORTH CAROLINA
DEPARTMENT OF TRANSPORTATION
RALEIGH

PLAN OF SPANS
UNIT F
SPANS 17-20

-LEFT LANE-

NORTH CAROLINA PROFESSIONAL SEAL 28479 ENGINEER KEVIN G. BAILEY
6-7-13

STV / Ralph Whitehead Associates, Inc.
1000 West Morehead St., Ste. 200
Charlotte, NC 28208
NC License No. F-0991

REVISIONS							SHEET NO.
NO.	BY:	DATE:	NO.	BY:	DATE:		S-64
1			3				TOTAL SHEETS
2			4				236

DRAWN BY : VMW	DATE : 8-12	DESIGN ENGINEER OF RECORD: A. PETER	DATE : 5-13
CHECKED BY : AJP	DATE : 8-12		

6/7/2013 10:33:03 AM R:\ustation\Finals\Plan of Spans_Spans 17-20_Sheet 2 of 2.dgn

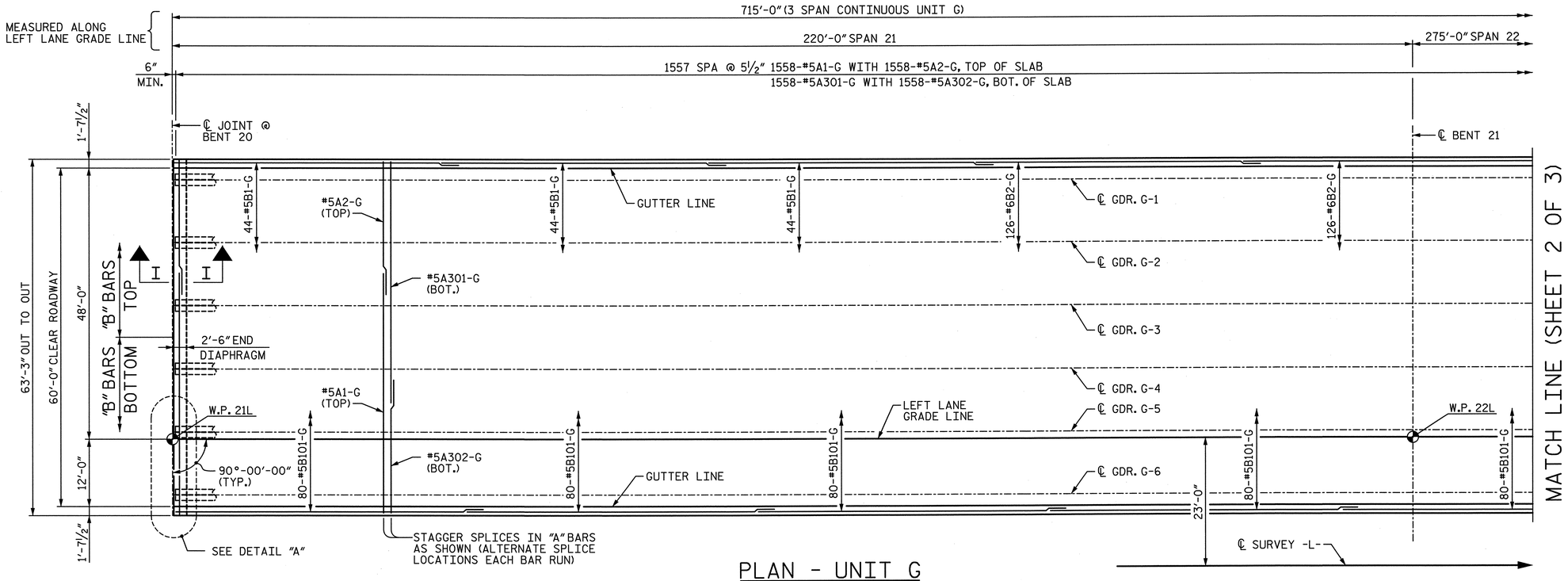

PLAN - UNIT G

NOTES:

1. FOR CONCRETE BARRIER RAIL DIMENSIONS, REINFORCEMENT AND JOINT SPACING, SEE "PLAN OF RAILS" SHEETS.
2. FOR POURING SEQUENCE AND TRANSVERSE CONSTRUCTION JOINT IN DECK SLAB, SEE "DECK POUR DIAGRAMS" SHEET.
3. FOR SECTION VIEWS, SEE "SUPERSTRUCTURE DETAILS" SHEETS.
4. FOR DRAINAGE SYSTEM, SEE "STRUCTURE DRAINAGE SYSTEM" SHEETS.
5. FOR MINIMUM SPLICE LENGTHS, SEE "SUPERSTRUCTURE BILL OF MATERIAL".
6. FOR "B" BAR SPACING AND LOCATIONS, SEE CORRESPONDING "TYPICAL SECTION" SHEET.

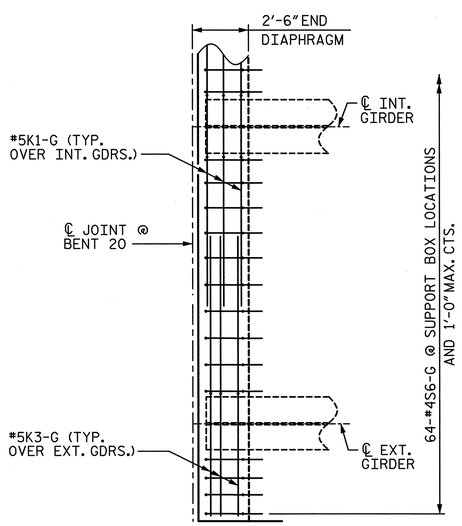

DETAIL "A"

END DIAPHRAGM AT BENT 20

(G1 BARS NOT SHOWN FOR CLARITY, SEE CORRESPONDING "TYPICAL SECTION" SHEET FOR PLACEMENT AND LOCATION.)

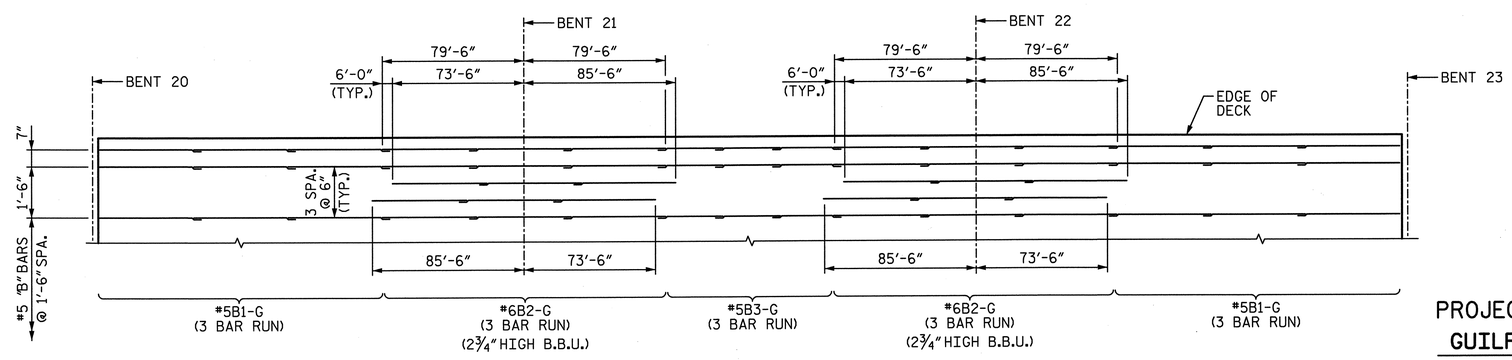

TOP "B" BAR PLACEMENT DETAIL

PROJECT NO. U-2524C

GUILFORD COUNTY

STATION: POT 407+73.35 -L-
= POT 29+32.06 -Y4-

SHEET 1 OF 3

STATE OF NORTH CAROLINA
DEPARTMENT OF TRANSPORTATION
RALEIGH

PLAN OF SPANS
UNIT G
SPANS 21-23

-LEFT LANE-

NORTH CAROLINA PROFESSIONAL SEAL 28479 ENGINEER KEVIN G. BAILEY 6-7-13

DRAWN BY : ACA	DATE : 8-12	DESIGN ENGINEER OF RECORD: A. PETER	DATE : 5-13
CHECKED BY : AJP	DATE : 9-12		

STV/Ralph Whitehead Associates, Inc.
1000 West Morehead St., Ste. 200
Charlotte, NC 28208
NC License No. F-0991

REVISIONS						SHEET NO.
NO.	BY:	DATE:	NO.	BY:	DATE:	S-65
1			3			TOTAL SHEETS
2			4			836

R:\ustation\Finals\Plan of Spans_Spans 21-23_Sheet 1 of 3.dgn 10:33:08 AM 6/7/2013

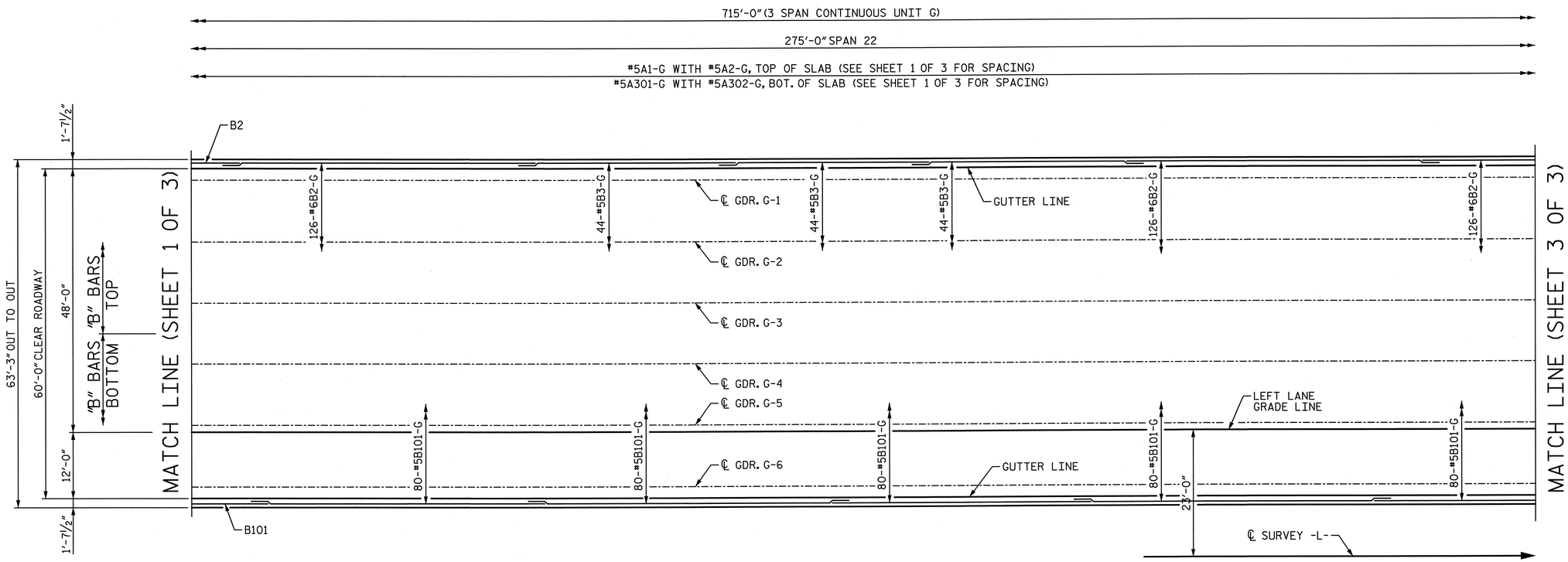

PLAN - UNIT G

PROJECT NO. U-2524C

GUILFORD COUNTY

STATION: POT 407+73.35 -L-
= POT 29+32.06 -Y4-

SHEET 2 OF 3

STATE OF NORTH CAROLINA
DEPARTMENT OF TRANSPORTATION
RALEIGH

PLAN OF SPANS
UNIT G
SPANS 21-23

-LEFT LANE-

NORTH CAROLINA PROFESSIONAL SEAL 28479 ENGINEER KEVIN G. BAILEY 5-30-13

STV / Ralph Whitehead Associates, Inc.
1000 West Morehead St., Ste. 200
Charlotte, NC 28208
NC License No. F-0991

REVISIONS							SHEET NO.
NO.	BY:	DATE:	NO.	BY:	DATE:		S-66
1			3				TOTAL SHEETS
2			4				83

DRAWN BY : ACA	DATE : 8-12	DESIGN ENGINEER OF RECORD: A. PETER	DATE : 5-13
CHECKED BY : AJP	DATE : 9-12		

5/30/2013 4:52:18 PM R:\ustation\Finals\Plan of Spans_Spans 21-23_Sheet 2 of 3.dgn

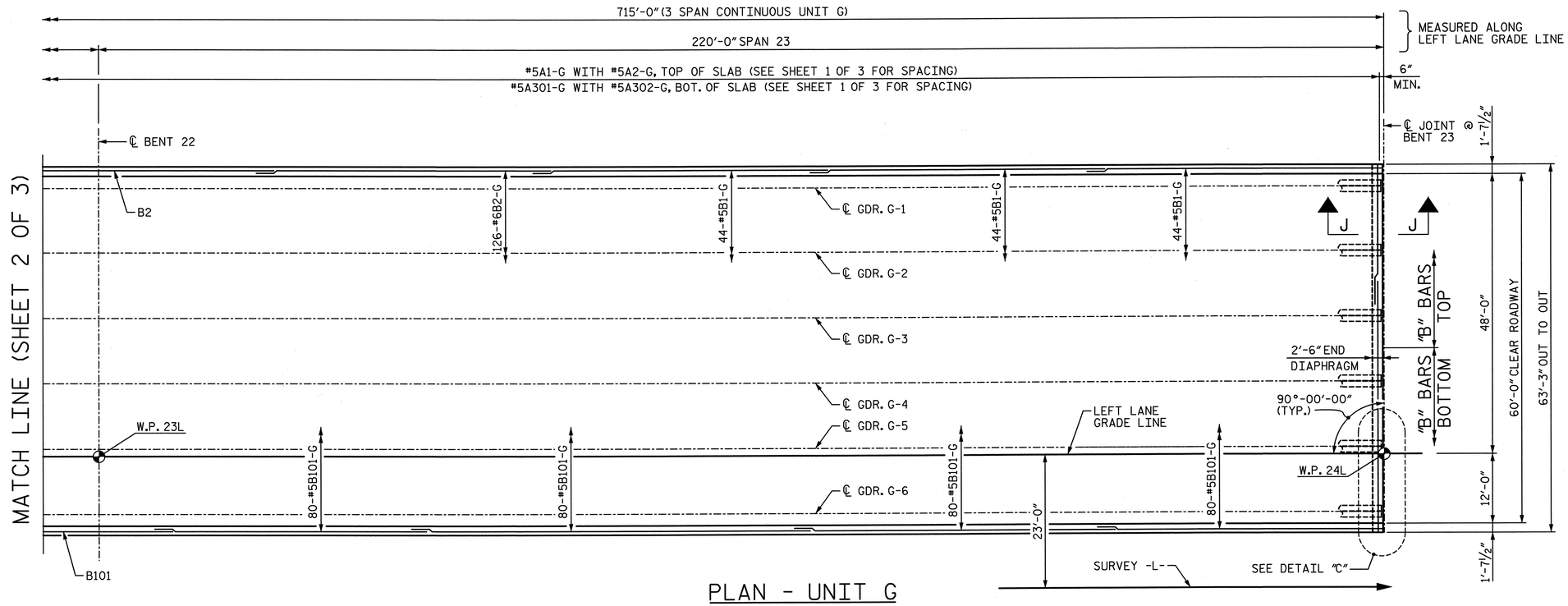

PLAN - UNIT G

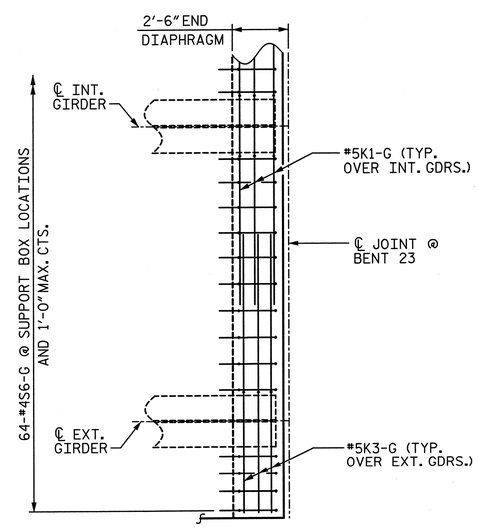

DETAIL "C"

END DIAPHRAGM AT BENT 23
(G1 BARS NOT SHOWN FOR CLARITY, SEE CORRESPONDING "TYPICAL SECTION" SHEET FOR PLACEMENT AND LOCATION.)

NORTH CAROLINA PROFESSIONAL SEAL 28479 ENGINEER KEVIN G. BAILEY
6-7-13

PROJECT NO. U-2524C
GUILFORD COUNTY
STATION: POT 407+73.35 -L-
= POT 29+32.06 -Y4-
SHEET 3 OF 3

STATE OF NORTH CAROLINA
DEPARTMENT OF TRANSPORTATION
RALEIGH

PLAN OF SPANS
UNIT G
SPANS 21-23

-LEFT LANE-

REVISIONS							SHEET NO.
NO.	BY:	DATE:	NO.	BY:	DATE:		S-67
1			3				TOTAL SHEETS
2			4				836

STV / Ralph Whitehead Associates, Inc.
1000 West Morehead St., Ste. 200
Charlotte, NC 28208
NC License No. F-0991

DRAWN BY : ACA	DATE : 8-12	DESIGN ENGINEER OF RECORD: A. PETER	DATE : 5-13
CHECKED BY : AJP	DATE : 9-12		

6/7/2013 10:33:12 AM R:\ustation\Finals\Plan of Spans_Spans 21-23_Sheet 3 of 3.dgn

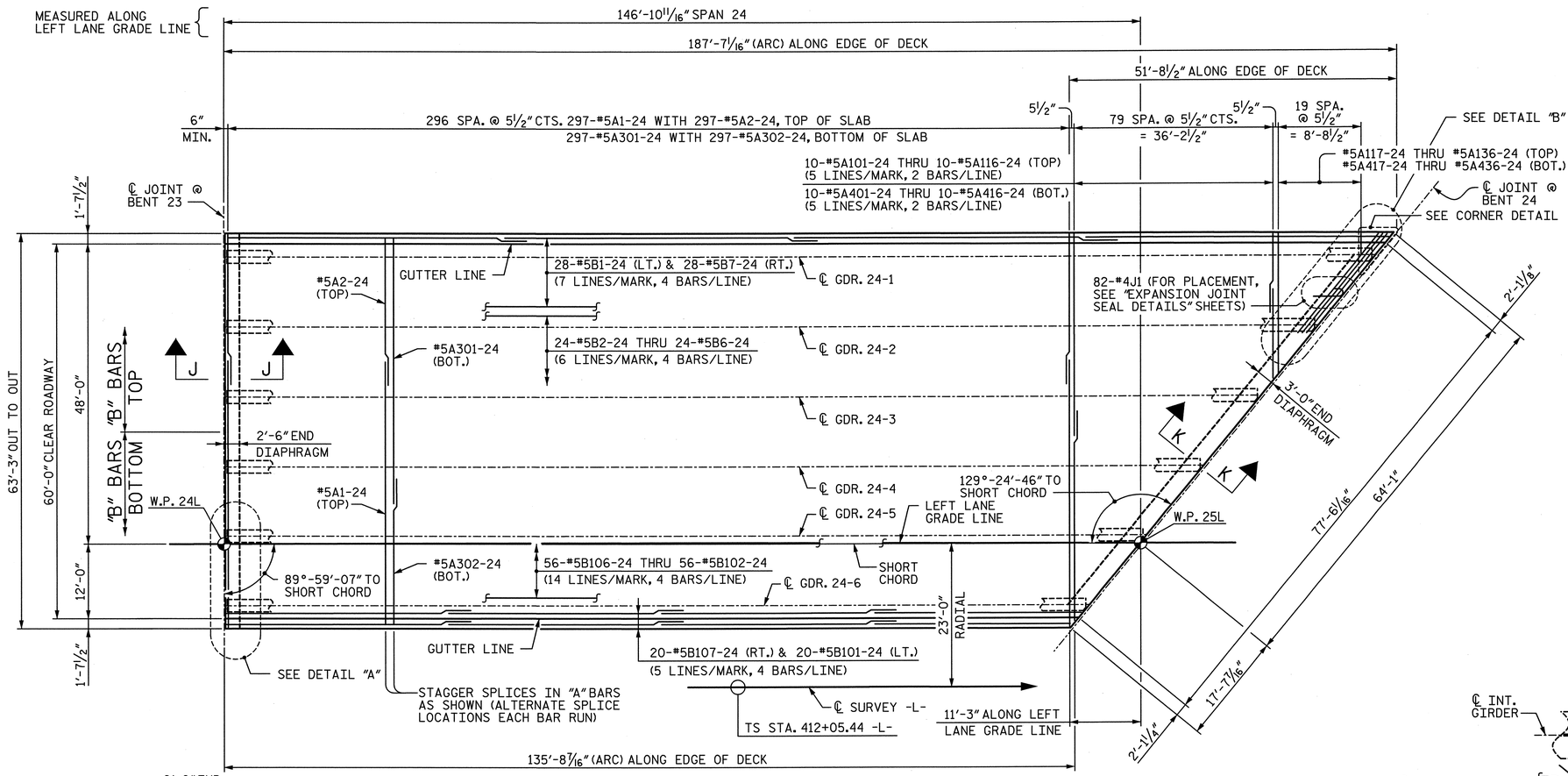

PLAN - SPAN 24

NOTES:

1. FOR CONCRETE BARRIER RAIL DIMENSIONS, REINFORCEMENT AND JOINT SPACING, SEE "PLAN OF RAILS" SHEETS.
2. FOR POURING SEQUENCE AND TRANSVERSE CONSTRUCTION JOINT IN DECK SLAB, SEE "DECK POUR DIAGRAMS" SHEET.
3. FOR SECTION VIEWS, SEE "SUPERSTRUCTURE DETAILS" SHEETS.
4. FOR "B" BAR SPACING AND LOCATION, SEE CORRESPONDING "TYPICAL SECTION" SHEET.
5. FOR DRAINAGE SYSTEM, SEE "STRUCTURE DRAINAGE SYSTEM" SHEETS.
6. FOR MINIMUM SPLICE LENGTHS, SEE "SUPERSTRUCTURE BILL OF MATERIAL".
7. ARC OFFSETS FOR RIGHT EDGE OF DECK FOR SPAN 24 ARE NEGLIGIBLE.

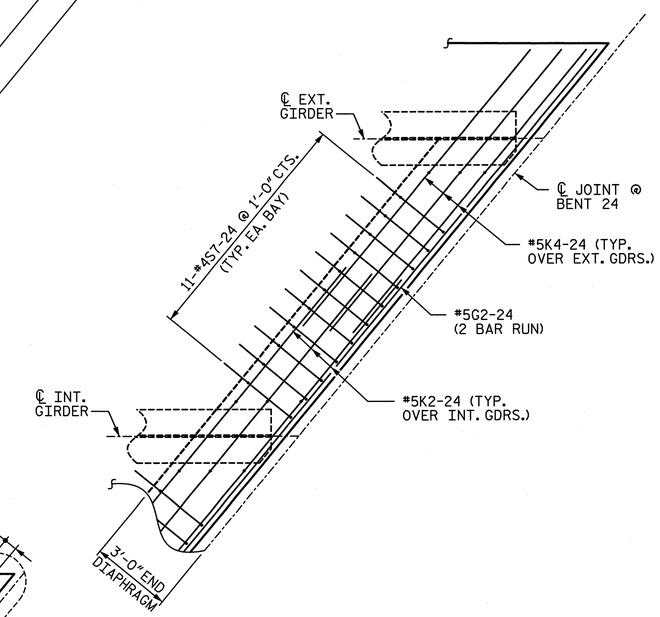

DETAIL "B"

END DIAPHRAGM AT BENT 24

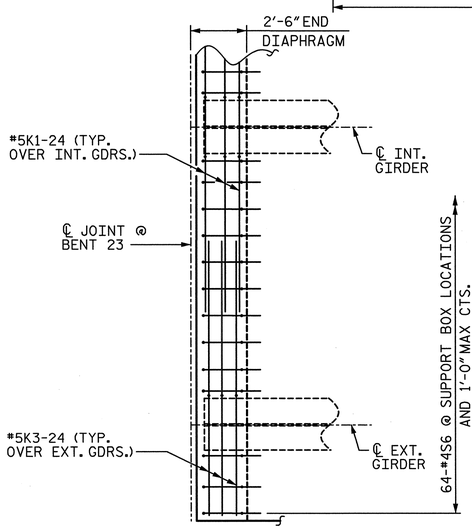

DETAIL "A"

END DIAPHRAGM AT BENT 23

(G1 BARS NOT SHOWN FOR CLARITY, SEE CORRESPONDING "TYPICAL SECTION" SHEET FOR PLACEMENT AND LOCATION.)

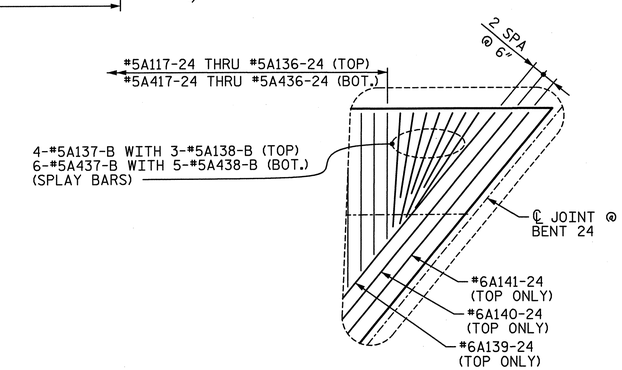

CORNER DETAIL

TOP STEEL SHOWN, BOT. STEEL SIMILAR

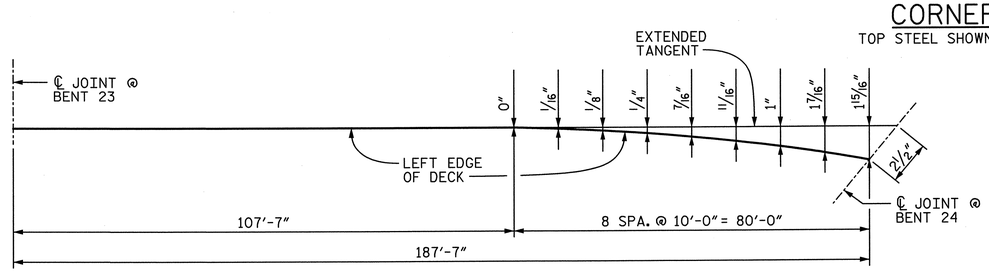

LEFT EDGE OF DECK

EXTENDED TANGENT LAYOUT

PROJECT NO. U-2524C

GUILFORD COUNTY

STATION: POT 407+73.35 -L-
= POT 29+32.06 -Y4-

NORTH CAROLINA PROFESSIONAL SEAL 28479 ENGINEER KEVIN G. BAILEY 6-7-13

STATE OF NORTH CAROLINA
DEPARTMENT OF TRANSPORTATION
RALEIGH

PLAN OF SPANS
SPAN 24

-LEFT LANE-

DRAWN BY : VMW	DATE : 8-12	DESIGN ENGINEER OF RECORD: A. PETER	DATE : 5-13
CHECKED BY : AJP	DATE : 1-13		

STV / Ralph Whitehead Associates, Inc.
1000 West Morehead St., Ste. 200
Charlotte, NC 28208
NC License No. F-0991

REVISIONS								SHEET NO.
NO.	BY:	DATE:	NO.	BY:	DATE:			S-68
1			3					TOTAL SHEETS
2			4					83

R:\station\Finals\Plan of Spans_Spans 24.dgn 10:33:18 AM 6/7/2013

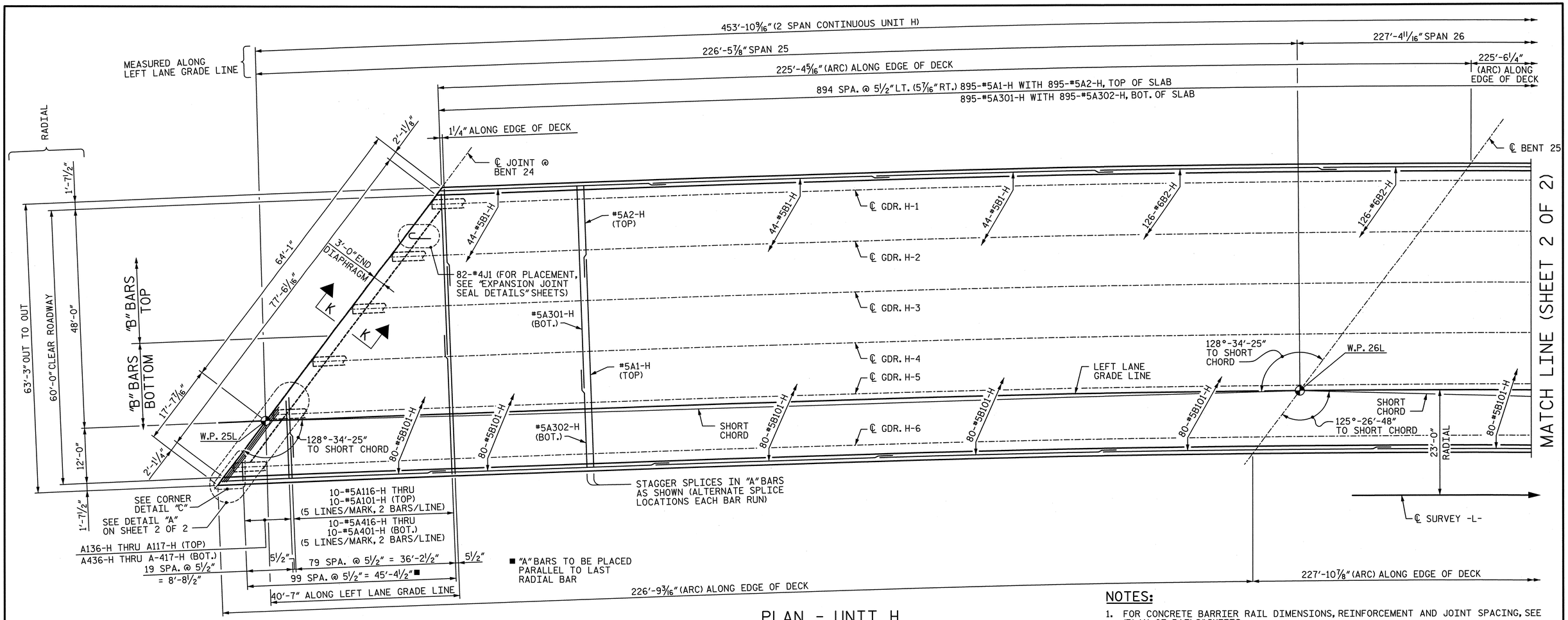

PLAN - UNIT H

NOTES:

1. FOR CONCRETE BARRIER RAIL DIMENSIONS, REINFORCEMENT AND JOINT SPACING, SEE "PLAN OF RAILS" SHEETS.
2. FOR POURING SEQUENCE AND TRANSVERSE CONSTRUCTION JOINT IN DECK SLAB, SEE "DECK POUR DIAGRAMS" SHEET.
3. FOR SECTION VIEWS, SEE "SUPERSTRUCTURE DETAILS" SHEETS.
4. FOR "B" BAR SPACING AND LOCATION, SEE CORRESPONDING "TYPICAL SECTION" SHEET.
5. "A" BARS TO BE PLACED RADIALLY, UNLESS NOTED OTHERWISE.
6. FOR DRAINAGE SYSTEM, SEE "STRUCTURE DRAINAGE SYSTEM" SHEETS.
7. FOR MINIMUM SPLICE LENGTHS, SEE "SUPERSTRUCTURE BILL OF MATERIAL".

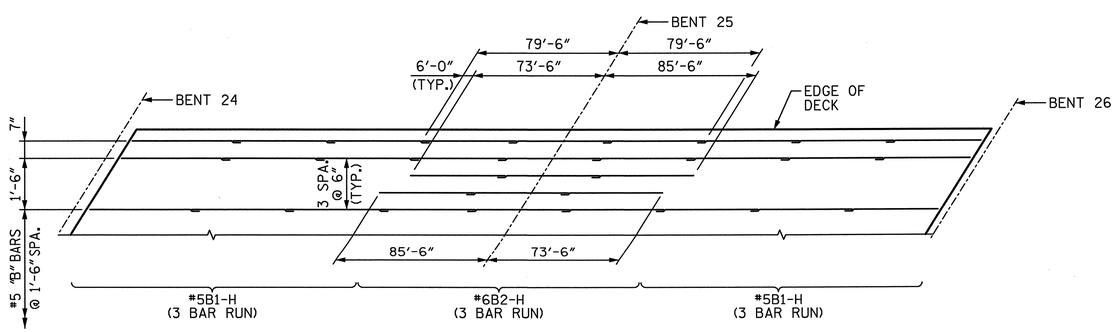

TOP "B" BAR PLACEMENT DETAIL

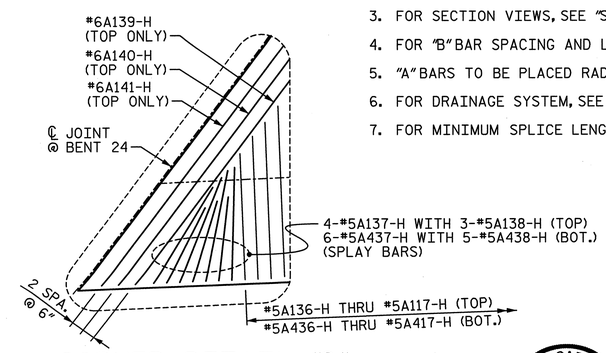

CORNER DETAIL "C"

TOP STEEL SHOWN, BOT. STEEL SIMILAR

NORTH CAROLINA PROFESSIONAL SEAL 28479 ENGINEER KEVIN G. BAILEY 6-7-13

PROJECT NO. U-2524C

GUILFORD COUNTY

STATION: POT 407+73.35 -L-
= POT 29+32.06 -Y4-

SHEET 1 OF 3

STATE OF NORTH CAROLINA
DEPARTMENT OF TRANSPORTATION
RALEIGH

PLAN OF SPANS
UNIT H
SPANS 25 & 26

-LEFT LANE-

REVISIONS						SHEET NO.
NO.	BY:	DATE:	NO.	BY:	DATE:	S-69
1			3			TOTAL SHEETS
2			4			336

STV / Ralph Whitehead Associates, Inc.
1000 West Morehead St., Ste. 200
Charlotte, NC 28208
NC License No. F-0991

DRAWN BY: VMW/ACA DATE: 8-12
CHECKED BY: AJP DATE: 2-13
DESIGN ENGINEER OF RECORD: A. PETER DATE: 5-13

6/7/2013 10:33:23 AM R:\ustation\Finals\Plan of Spans_Spans 25-26_Sheet 1of 3.dgn

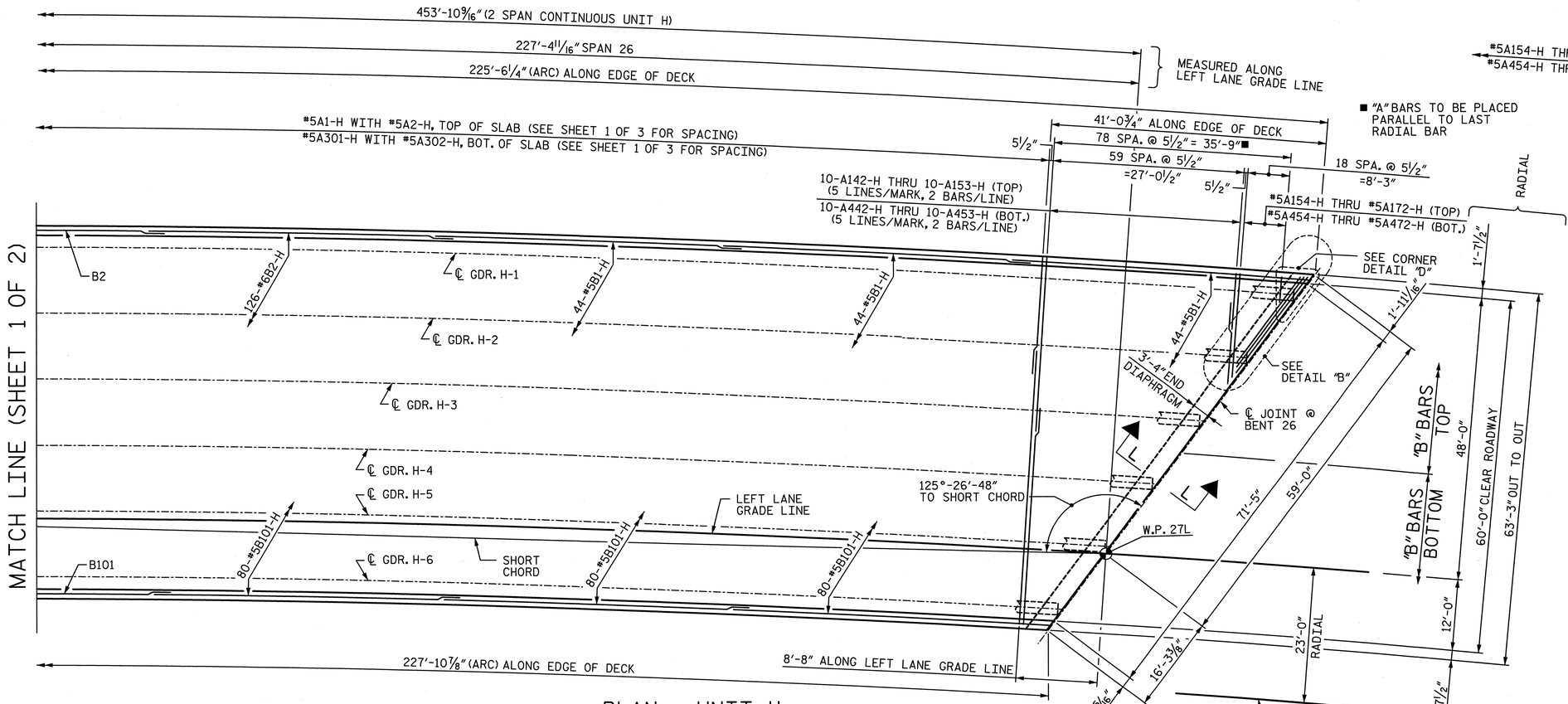

PLAN - UNIT H

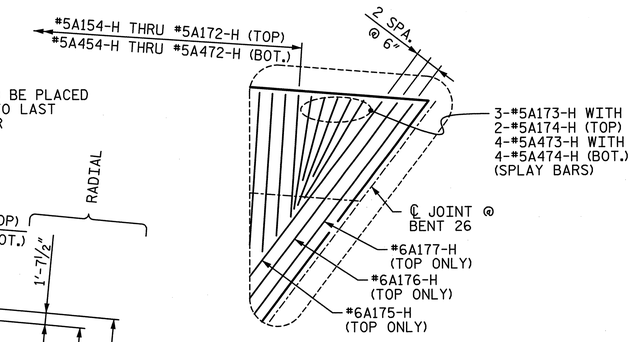

CORNER DETAIL "D"

TOP STEEL SHOWN, BOT. STEEL SIMILAR

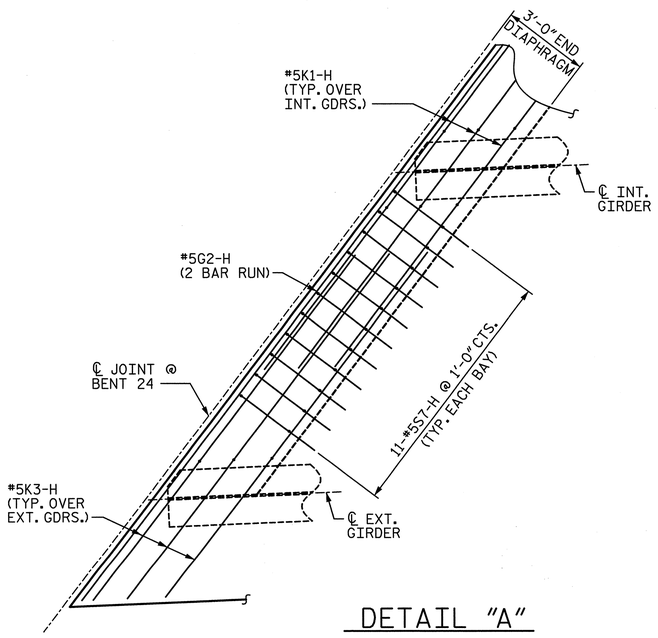

DETAIL "A"

END DIAPHRAGM AT BENT 24

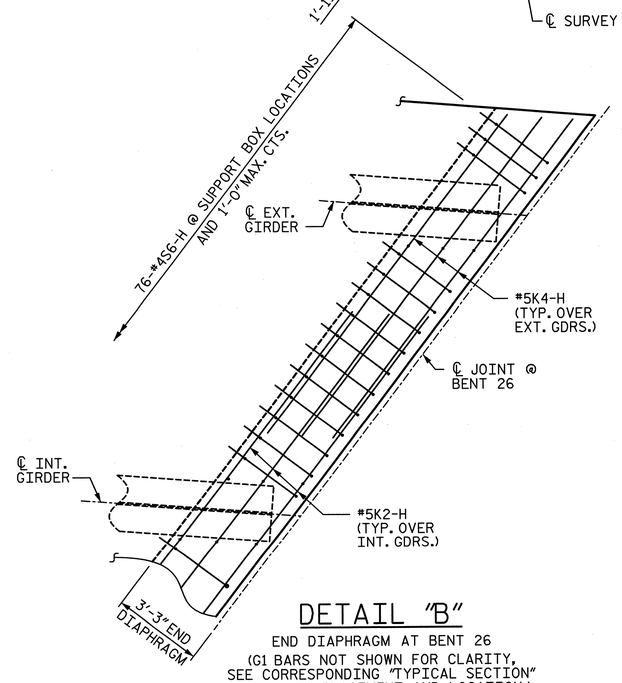

DETAIL "B"

END DIAPHRAGM AT BENT 26

(G1 BARS NOT SHOWN FOR CLARITY, SEE CORRESPONDING "TYPICAL SECTION" SHEET FOR PLACEMENT AND LOCATION.)

PROJECT NO. U-2524C

GUILFORD COUNTY

STATION: POT 407+73.35 -L-
= POT 29+32.06 -Y4-

SHEET 2 OF 3

STATE OF NORTH CAROLINA
DEPARTMENT OF TRANSPORTATION
RALEIGH

PLAN OF SPANS
UNIT H
SPANS 25 & 26

-LEFT LANE-

NORTH CAROLINA PROFESSIONAL SEAL 28479 ENGINEER KEVIN G. BAILEY 6-7-13

STV / Ralph Whitehead Associates, Inc.
1000 West Morehead St., Ste. 200
Charlotte, NC 28208
NC License No. F-0991

REVISIONS							SHEET NO.
NO.	BY:	DATE:	NO.	BY:	DATE:		S-70
1			3				TOTAL SHEETS
2			4				836

DRAWN BY : VMW/ACA	DATE : 8-12	DESIGN ENGINEER OF RECORD: A. PETER	DATE : 5-13
CHECKED BY : AJP	DATE : 2-13		

6/7/2013 10:33:27 AM R:\ustation\Finals\Plan of Spans_Spans 25-26_Sheet 2 of 3.dgn

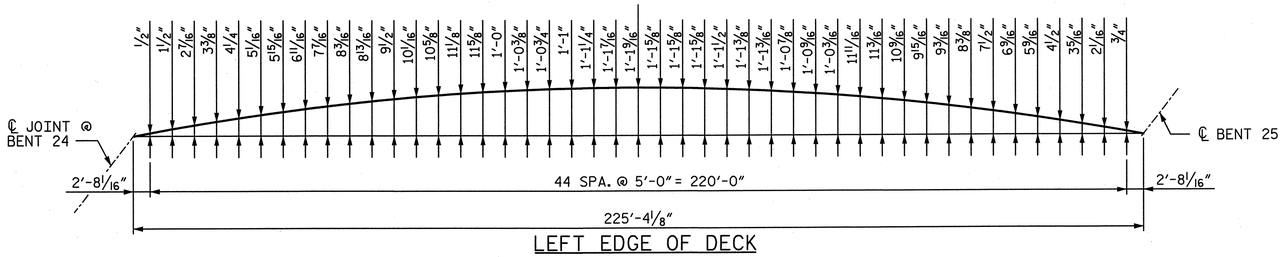

LEFT EDGE OF DECK

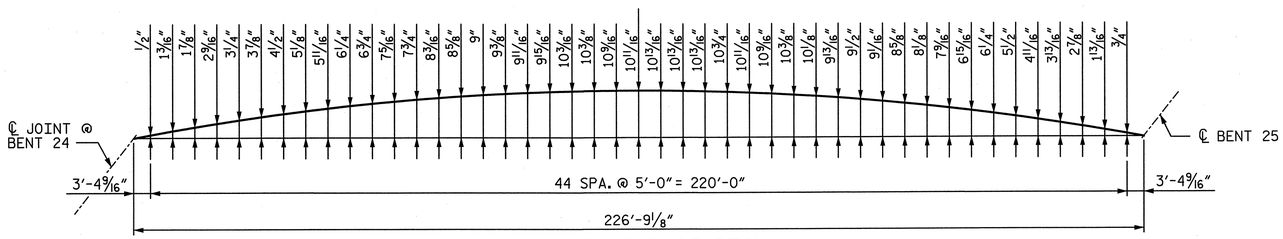

RIGHT EDGE OF DECK

ARC OFFSETS - SPAN 25

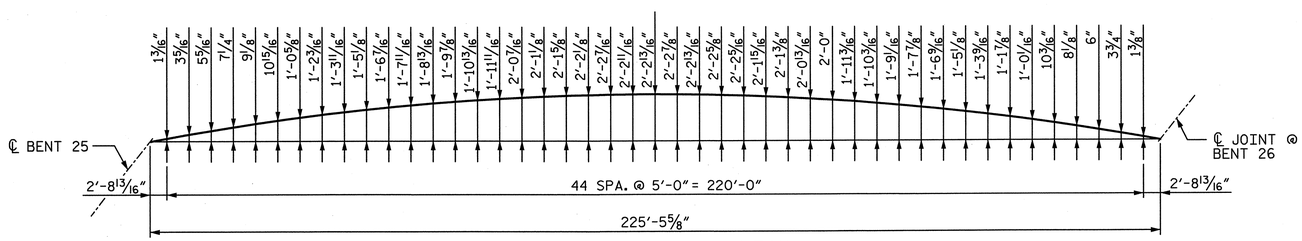

LEFT EDGE OF DECK

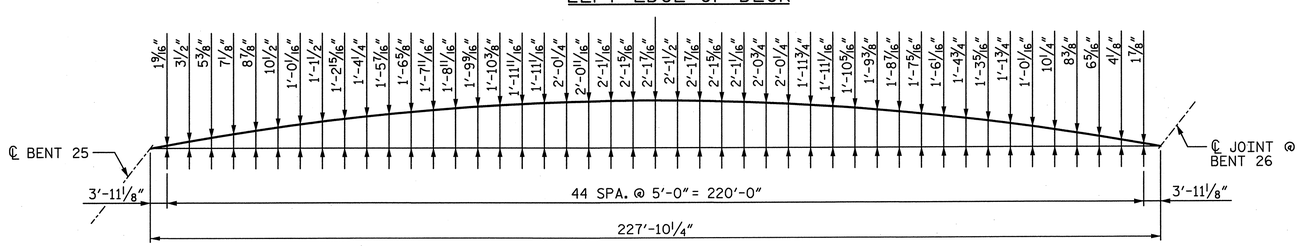

RIGHT EDGE OF DECK

ARC OFFSETS - SPAN 26

PROJECT NO. U-2524C

GUILFORD COUNTY

STATION: POT 407+73.35 -L-
= POT 29+32.06 -Y4-

SHEET 3 OF 3

STATE OF NORTH CAROLINA
DEPARTMENT OF TRANSPORTATION
RALEIGH

PLAN OF SPANS
UNIT H
SPANS 25 & 26

-LEFT LANE-

NORTH CAROLINA PROFESSIONAL SEAL 28479 ENGINEER KEVIN G. BAILEY
5-30-13

DRAWN BY : ACA	DATE : 2-13	DESIGN ENGINEER OF RECORD: A. PETER	DATE : 5-13
CHECKED BY : AJP	DATE : 2-13		

STV / Ralph Whitehead Associates, Inc.
1000 West Morehead St., Ste. 200
Charlotte, NC 28208
NC License No. F-0991

REVISIONS						SHEET NO.
NO.	BY:	DATE:	NO.	BY:	DATE:	S-71
1			3			TOTAL SHEETS
2			4			836

5/30/2013 6:27:08 PM R:\ustation\Finals\Plan of Spans_Spans 25-26_Sheet 3 of 3.dgn

NOTES:

1. FOR NOTES SEE SHEET 2 OF 2.

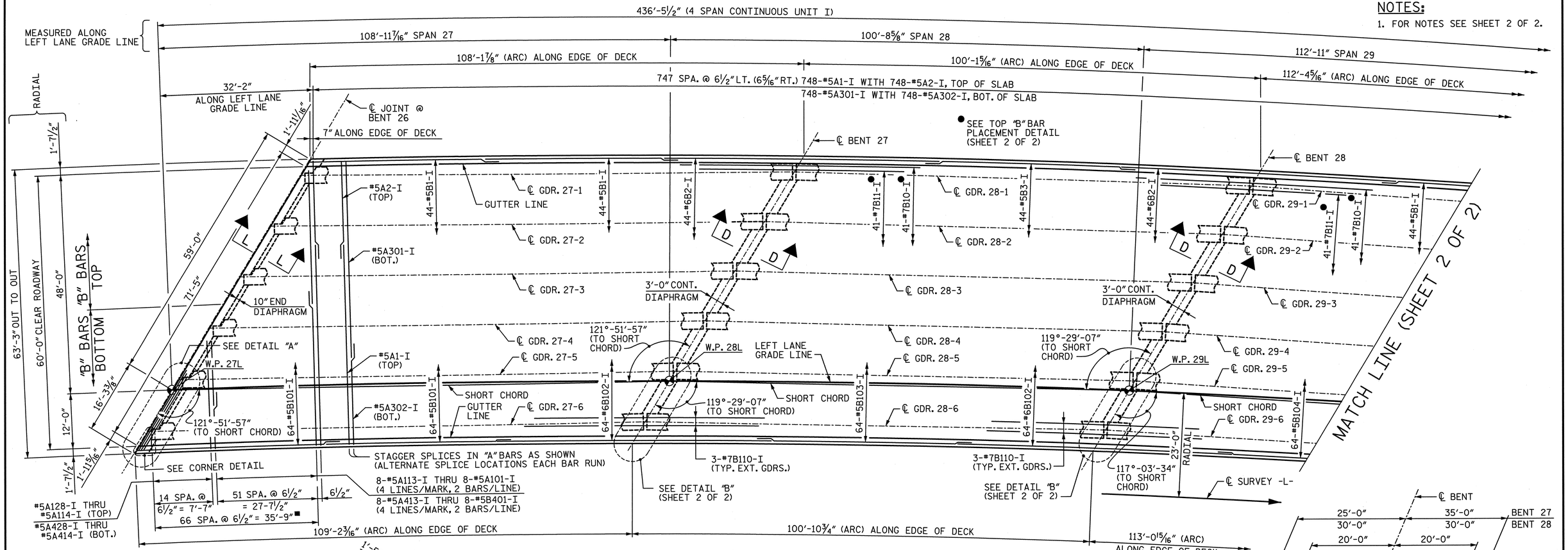

PLAN - UNIT I

■ "A" BARS TO BE PLACED PARALLEL TO LAST RADIAL BAR

NOTE: S10 BARS NOT SHOWN FOR CLARITY, SEE "TYPICAL SECTION" AND "SUPERSTRUCTURE DETAILS" SHEETS FOR DETAILS.

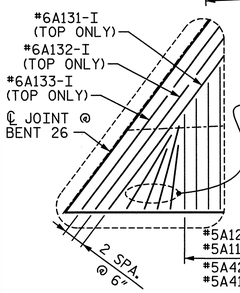

CORNER DETAIL

TOP STEEL SHOWN, BOT. STEEL SIMILAR

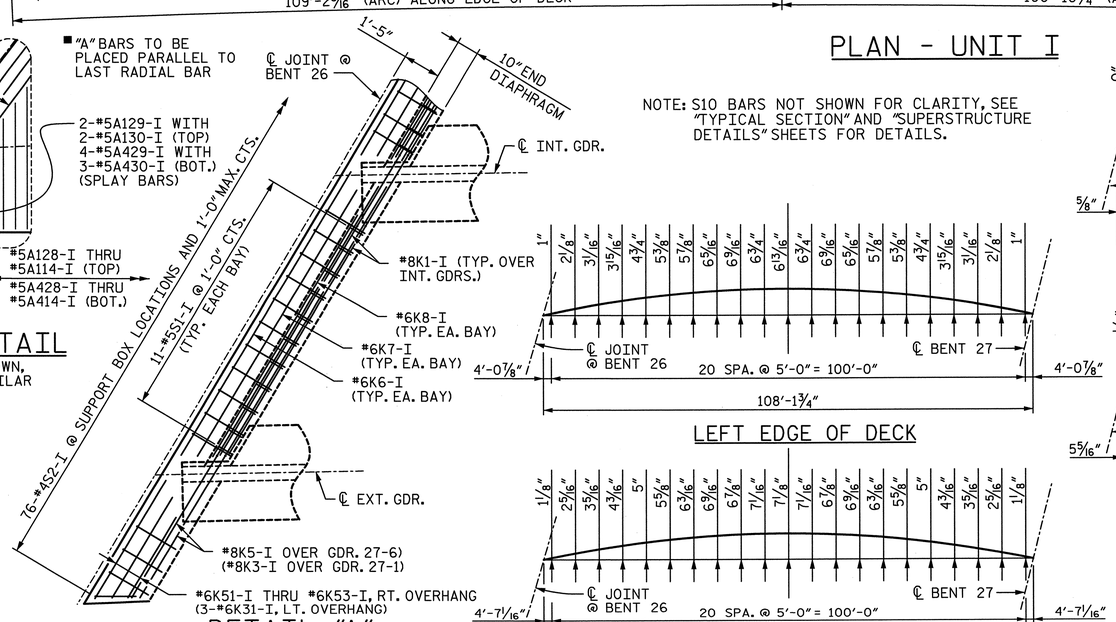

DETAIL "A"

END DIAPHRAGM AT BENT 26

(G1 BARS NOT SHOWN FOR CLARITY, SEE CORRESPONDING "TYPICAL SECTION" SHEET FOR PLACEMENT AND LOCATION.)

LEFT EDGE OF DECK

RIGHT EDGE OF DECK

ARC OFFSETS - SPAN 27

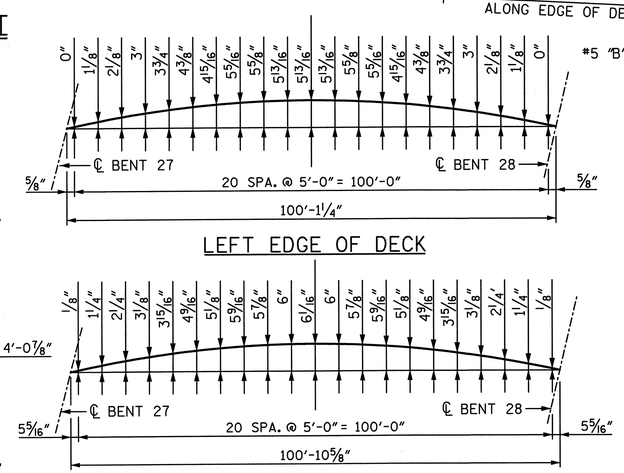

LEFT EDGE OF DECK

RIGHT EDGE OF DECK

ARC OFFSETS - SPAN 28

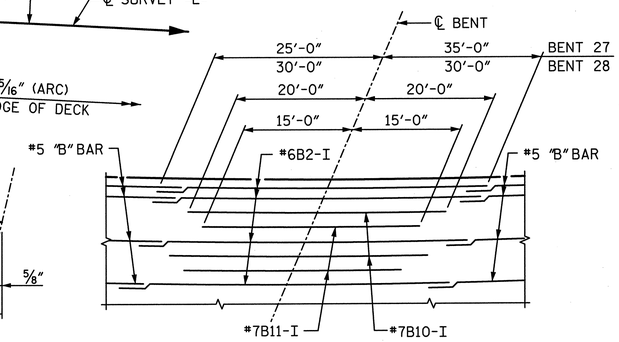

TOP "B" BAR PLACEMENT DETAIL

FOR BENT 27 & BENT 28

PROJECT NO. U-2524C

GUILFORD COUNTY

STATION: POT 407+73.35 -L-
= POT 29+32.06 -Y4-

SHEET 1 OF 2

STATE OF NORTH CAROLINA
DEPARTMENT OF TRANSPORTATION
RALEIGH

PLAN OF SPANS
UNIT I
SPANS 27-30

-LEFT LANE-

NORTH CAROLINA PROFESSIONAL SEAL 28479 ENGINEER KEVIN G. BAILEY 6-7-13

DRAWN BY : ACA	DATE : 8-12	DESIGN ENGINEER OF RECORD: A. PETER	DATE : 5-13
CHECKED BY : AJP	DATE : 8-12		

STV / Ralph Whitehead Associates, Inc.
1000 West Morehead St., Ste. 200
Charlotte, NC 28208
NC License No. F-0991

REVISIONS								SHEET NO.
NO.	BY:	DATE:	NO.	BY:	DATE:			S-72
1			3					TOTAL SHEETS
2			4					836

6/7/2013 10:33:32 AM R:\ustation\Finals\Plan of Spans_Spans 27-30.Sheet 1of 2.dgn

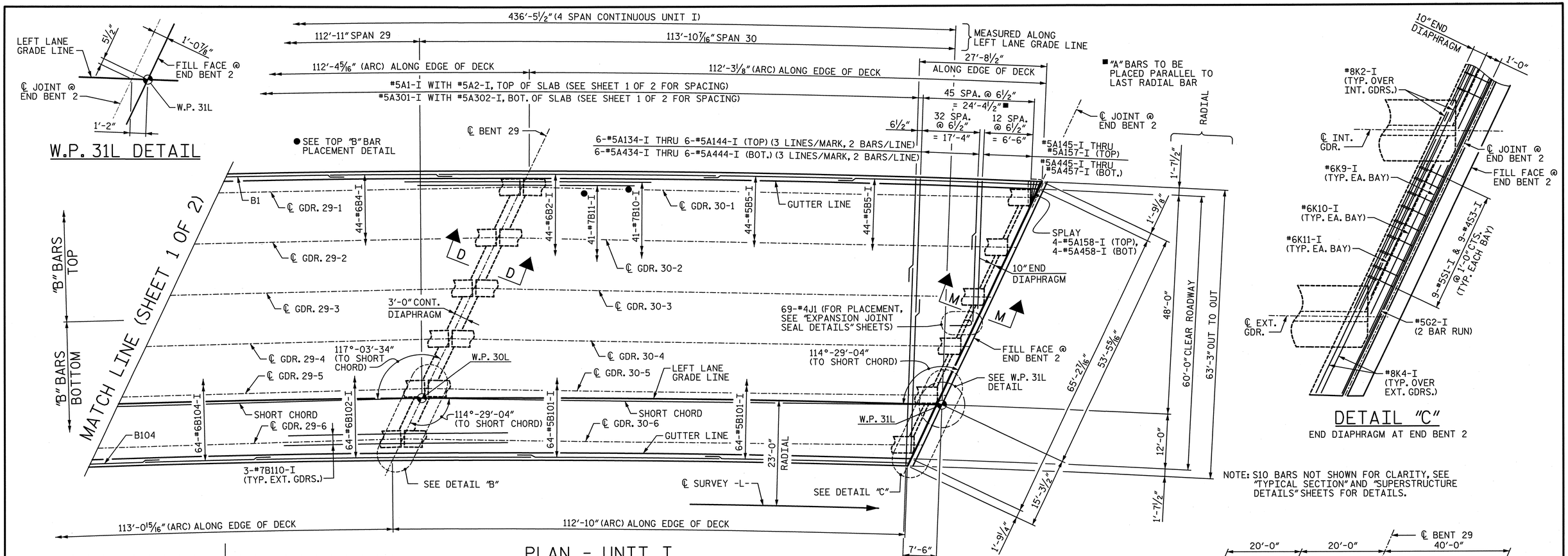

NOTES:

1. FOR CONCRETE BARRIER RAIL DIMENSIONS, REINFORCEMENT AND JOINT SPACING, SEE "PLAN OF RAILS" SHEETS.
2. FOR POURING SEQUENCE AND TRANSVERSE CONSTRUCTION JOINT IN DECK SLAB, SEE "DECK POUR DIAGRAMS" SHEET.
3. FOR SECTION VIEWS, SEE "SUPERSTRUCTURE DETAILS" SHEETS.
4. FOR "B" BAR SPACING AND LOCATION, SEE CORRESPONDING "TYPICAL SECTION" SHEET.
5. "A" BARS TO BE PLACED RADIALLY, UNLESS NOTED OTHERWISE.
6. FOR DRAINAGE SYSTEM, SEE "STRUCTURE DRAINAGE SYSTEM" SHEETS.
7. FOR MINIMUM SPLICE LENGTHS, SEE "SUPERSTRUCTURE BILL OF MATERIAL".

PROJECT NO. U-2524C
GUILFORD COUNTY
STATION: POT 407+73.35 -L-
= POT 29+32.06 -Y4-

SHEET 2 OF 2

STATE OF NORTH CAROLINA
DEPARTMENT OF TRANSPORTATION
RALEIGH

PLAN OF SPANS
UNIT I
SPANS 27-30

-LEFT LANE-

DRAWN BY: ACA	DATE: 8-12	DESIGN ENGINEER OF RECORD: A. PETER	DATE: 5-13
CHECKED BY: AJP	DATE: 8-12		

STV / Ralph Whitehead Associates, Inc.
1000 West Morehead St., Ste. 200
Charlotte, NC 28208
NC License No. F-0991

REVISIONS							SHEET NO.
NO.	BY:	DATE:	NO.	BY:	DATE:		S-73
1			3				TOTAL SHEETS
2			4				336

6/7/2013 10:33:36 AM R:\station\Finals\Plan of Spans_Spans 27-30_Sheet 2 of 2.dgn

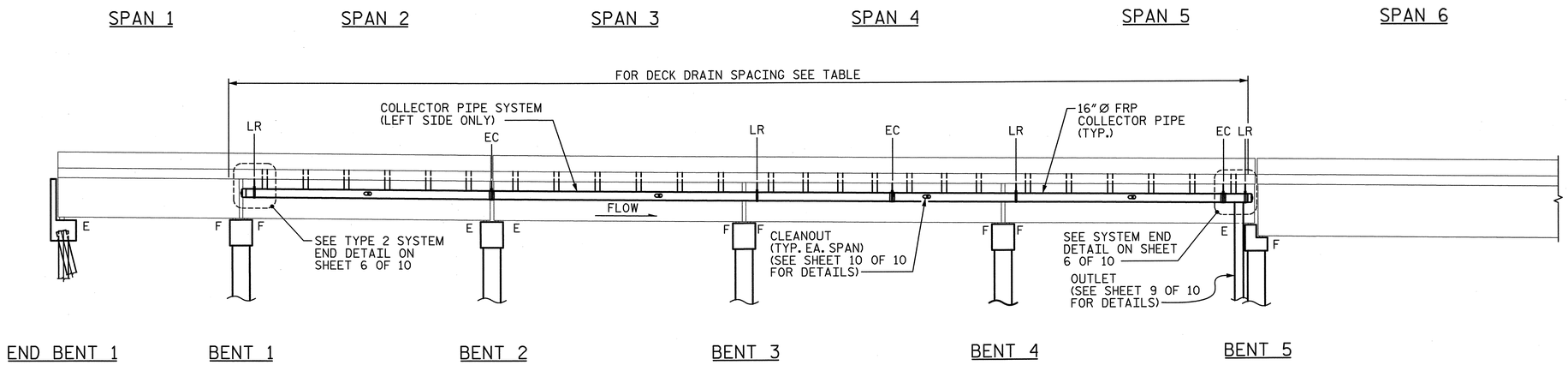

ELEVATION

EC = EXPANSION COUPLER (SEE SHEET 10 OF 10 FOR DETAILS)
LR = LONGITUDINAL RESTRAINT (SEE SHEET 6 OF 10 FOR DETAILS)

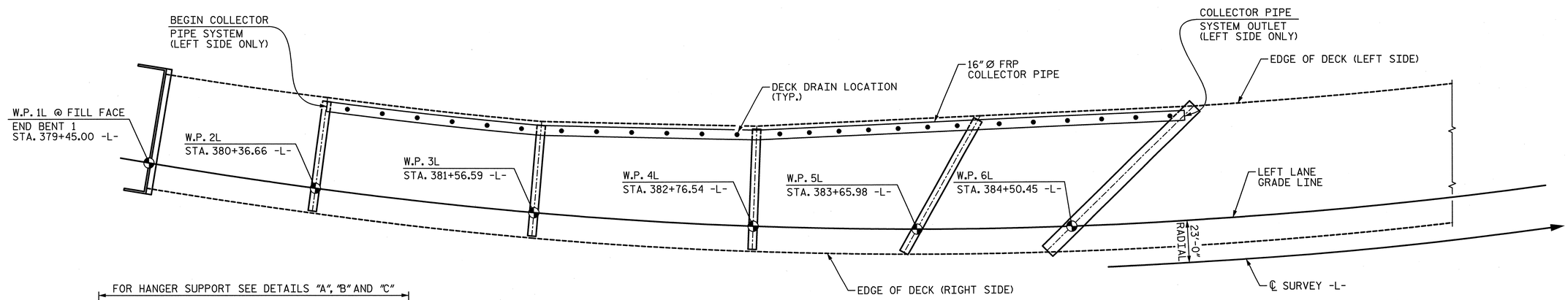

PLAN

GIRDERS NOT SHOWN FOR CLARITY

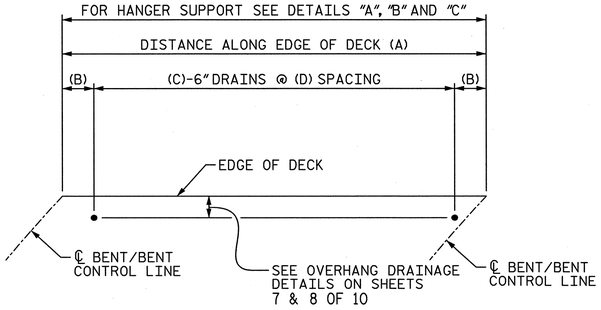

DRAIN LAYOUT DETAIL

(SEE SHEET 6 OF 10 FOR DETAILS)

DECK DRAIN SPACING TABLE				
SPAN	A (FT.)	B (FT.)	C	D (FT.)
2	116.68	9.59	6	19.50
3	116.43	9.47	6	19.50
4	120.85	10.93	7	16.50
5	115.55	9.03	6	19.50

NOTES:

1. FOR COLLECTOR PIPE SUPPORTS, SEE SHEETS 6 & 7 OF 10.
2. FOR ADDITIONAL NOTES, SEE SHEET 10 OF 10.

NORTH CAROLINA PROFESSIONAL SEAL 28479 ENGINEER KEVIN G. BAILEY
5-30-13

PROJECT NO. U-2524C
GUILFORD COUNTY
STATION: POT 407+73.35 -L-
= POT 29+32.06 -Y4-

SHEET 1 OF 10

STATE OF NORTH CAROLINA
DEPARTMENT OF TRANSPORTATION
RALEIGH

STRUCTURE DRAINAGE SYSTEM DETAILS

-LEFT LANE-

REVISIONS							SHEET NO.
NO.	BY:	DATE:	NO.	BY:	DATE:		S-74
1			3				TOTAL SHEETS
2			4				836

STV / Ralph Whitehead Associates, Inc.
1000 West Morehead St., Ste. 200
Charlotte, NC 28208
NC License No. F-0991

DRAWN BY : VMW DATE : 10-12
CHECKED BY : TJT DATE : 3-13
DESIGN ENGINEER OF RECORD: T. TOWNSEND DATE : 5-13

5/30/2013 4:52:55 PM R:\ustation\Finals\Closed Drainage System Sheet 1of 10.dgn

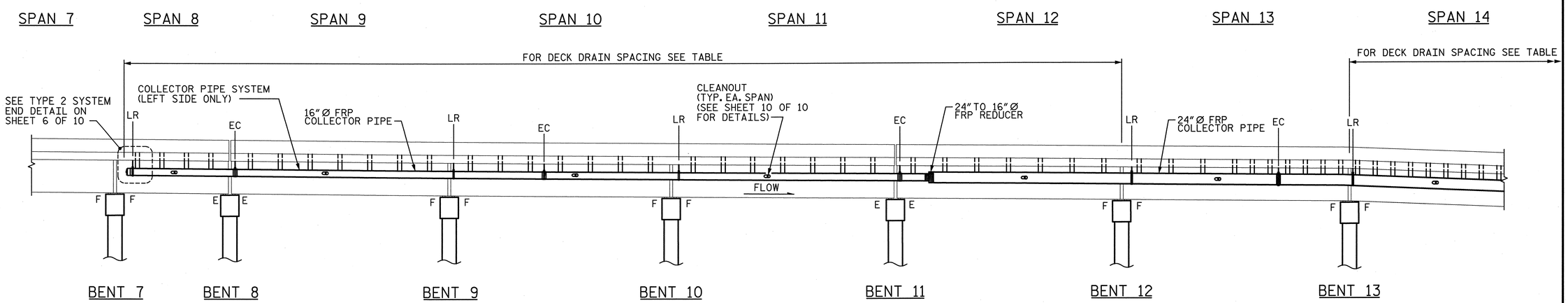

ELEVATION

EC = EXPANSION COUPLER (SEE SHEET 10 OF 10 FOR DETAILS)
LR = LONGITUDINAL RESTRAINT (SEE SHEET 6 OF 10 FOR DETAILS)

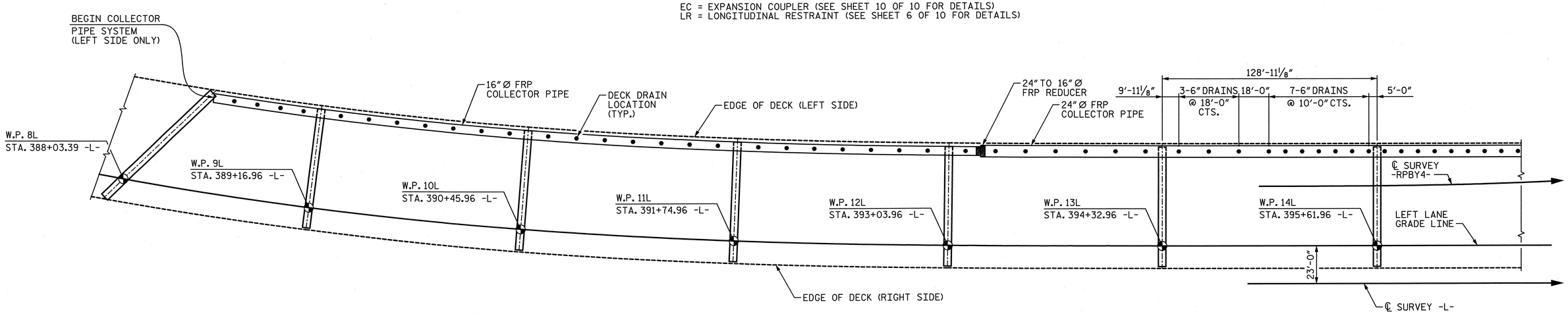

PLAN

GIRDERS NOT SHOWN FOR CLARITY

DECK DRAIN SPACING TABLE				
SPAN	A (FT.)	B (FT.)	C	D (FT.)
8	64.11	9.56	4	15.00
9	124.99	10.00	7	17.50
10	125.66	9.58	7	17.75
11	126.83	9.42	7	18.00
12	128.00	10.00	7	18.00
13	SEE PLAN			
14	129.00	4.50	13	10.00

NOTES:

1. FOR COLLECTOR PIPE SUPPORTS, SEE SHEETS 6 & 7 OF 10.
2. FOR ADDITIONAL NOTES, SEE SHEET 10 OF 10.
3. FOR DRAIN LAYOUT DETAIL, SEE SHEET 1 OF 10.

NORTH CAROLINA PROFESSIONAL SEAL 28479 ENGINEER KEVIN G. BAILEY
5-30-13

PROJECT NO. U-2524C
GUILFORD COUNTY
STATION: POT 407+73.35 -L-
= POT 29+32.06 -Y4-
SHEET 2 OF 10

STATE OF NORTH CAROLINA
DEPARTMENT OF TRANSPORTATION
RALEIGH

STRUCTURE DRAINAGE SYSTEM DETAILS

-LEFT LANE-

REVISIONS						
NO.	BY:	DATE:	NO.	BY:	DATE:	
1			3			
2			4			

SHEET NO. S-75
TOTAL SHEETS 836

STV / Ralph Whitehead Associates, Inc.
1000 West Morehead St., Ste. 200
Charlotte, NC 28208
NC License No. F-0991

DRAWN BY : VMW DATE : 10-12
CHECKED BY : TJT DATE : 3-13
DESIGN ENGINEER OF RECORD: T. TOWNSEND DATE : 5-13

5/30/2013 8:59:39 PM R:\Ustation\Finals\Closed Drainage System Sheet 2 of 10.dgn

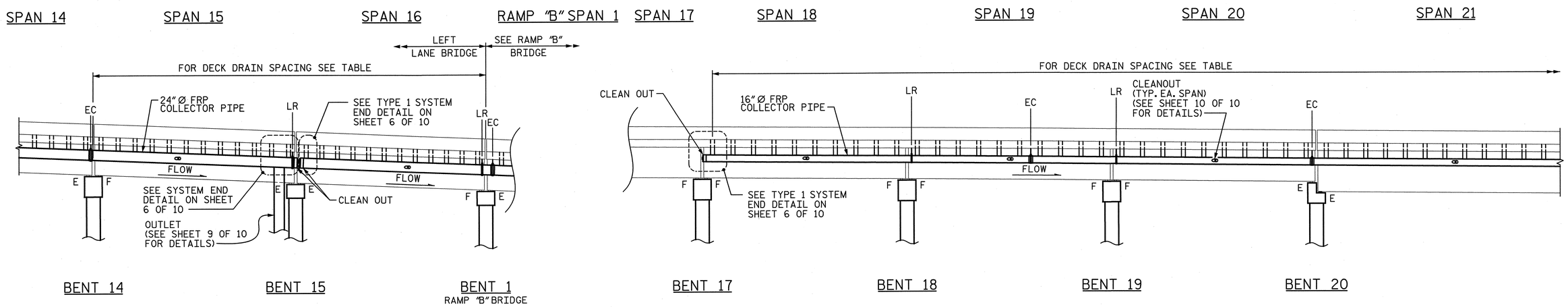

ELEVATION

EC = EXPANSION COUPLER (SEE SHEET 10 OF 10 FOR DETAILS)
LR = LONGITUDINAL RESTRAINT (SEE SHEET 6 OF 10 FOR DETAILS)

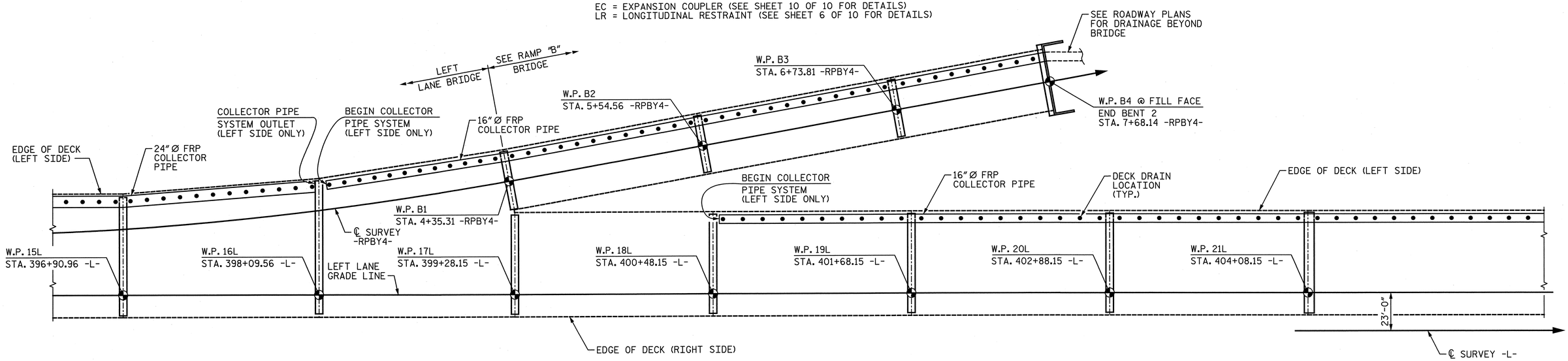

PLAN

GIRDERS NOT SHOWN FOR CLARITY

DECK DRAIN SPACING TABLE				
SPAN	A (FT.)	B (FT.)	C	D (FT.)
14	SEE SHEET 2 OF 10			
15	118.96	4.48	12	10.00
16	112.93	5.59	12	9.25
18	120.00	6.00	10	12.00
19	120.00	6.00	10	12.00
20	120.00	6.00	10	12.00
21	220.00	5.75	19	11.58

NOTES:

1. FOR COLLECTOR PIPE SUPPORTS, SEE SHEETS 6 & 7 OF 10.
2. FOR ADDITIONAL NOTES, SEE SHEET 10 OF 10.
3. FOR DRAIN LAYOUT DETAIL, SEE SHEET 1 OF 10.

PROJECT NO. U-2524C
GUILFORD COUNTY
STATION: POT 407+73.35 -L-
= POT 29+32.06 -Y4-
SHEET 3 OF 10

NORTH CAROLINA PROFESSIONAL SEAL 28479 ENGINEER KEVIN G. BAILEY 5-30-13

STATE OF NORTH CAROLINA
DEPARTMENT OF TRANSPORTATION
RALEIGH

STRUCTURE DRAINAGE SYSTEM DETAILS

-LEFT LANE-

REVISIONS						SHEET NO.
NO.	BY:	DATE:	NO.	BY:	DATE:	S-76
1			3			TOTAL SHEETS
2			4			836

STV/ Ralph Whitehead Associates, Inc.
1000 West Morehead St., Ste. 200
Charlotte, NC 28208
NC License No. F-0991

DRAWN BY : VMW	DATE : 10-12	DESIGN ENGINEER OF RECORD: T. TOWNSEND	DATE : 5-13
CHECKED BY : TJT	DATE : 3-13		

5/30/2013 6:01:14 PM R:\ustation\Finals\Closed Drainage System Sheet 3 of 10.dgn

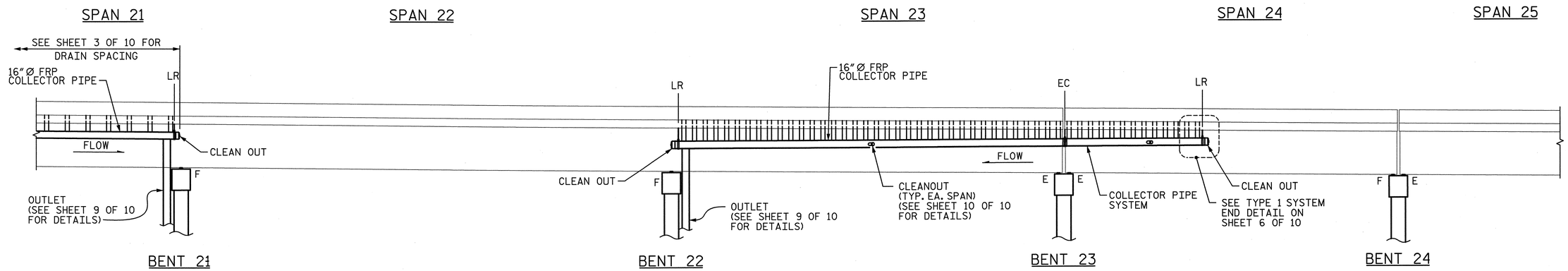

ELEVATION (LEFT SIDE)

EC = EXPANSION COUPLER (SEE SHEET 10 OF 10 FOR DETAILS)
LR = LONGITUDINAL RESTRAINT (SEE SHEET 6 OF 10 FOR DETAILS)

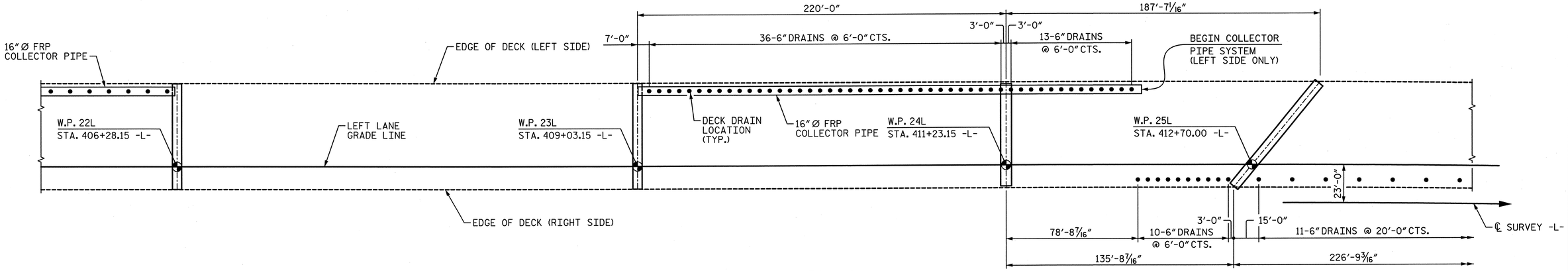

PLAN

GIRDERS NOT SHOWN FOR CLARITY

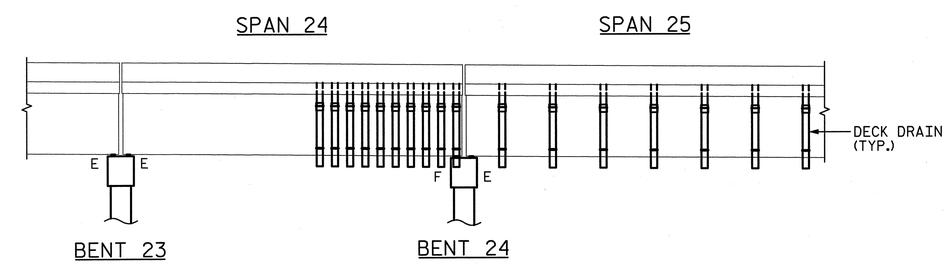

ELEVATION (RIGHT SIDE)

PROJECT NO. U-2524C
GUILFORD COUNTY
STATION: POT 407+73.35 -L-
= POT 29+32.06 -Y4-

SHEET 4 OF 10

NOTES:

1. FOR COLLECTOR PIPE SUPPORTS, SEE SHEETS 6 & 7 OF 10.
2. FOR ADDITIONAL NOTES, SEE SHEET 10 OF 10.
3. FOR DRAIN LAYOUT DETAIL, SEE SHEET 1 OF 10.
4. FOR OPEN DRAIN DETAILS, SEE SHEET 8 OF 10.

NORTH CAROLINA PROFESSIONAL SEAL 28479 ENGINEER KEVIN G. BAILEY
5-30-13

STATE OF NORTH CAROLINA
DEPARTMENT OF TRANSPORTATION
RALEIGH

STRUCTURE DRAINAGE SYSTEM DETAILS

-LEFT LANE-

STV / Ralph Whitehead Associates, Inc.
1000 West Morehead St., Ste. 200
Charlotte, NC 28208
NC License No. F-0991

REVISIONS						
NO.	BY:	DATE:	NO.	BY:	DATE:	
1			3			
2			4			

SHEET NO. S-77
TOTAL SHEETS 83

DRAWN BY : VMW DATE : 10-12
CHECKED BY : TJT DATE : 3-13
DESIGN ENGINEER OF RECORD: T. TOWNSEND DATE : 5-13

5/30/2013 4:53:08 PM R:\ustation\Finals\Closed Drainage System Sheet 4 of 10.dgn

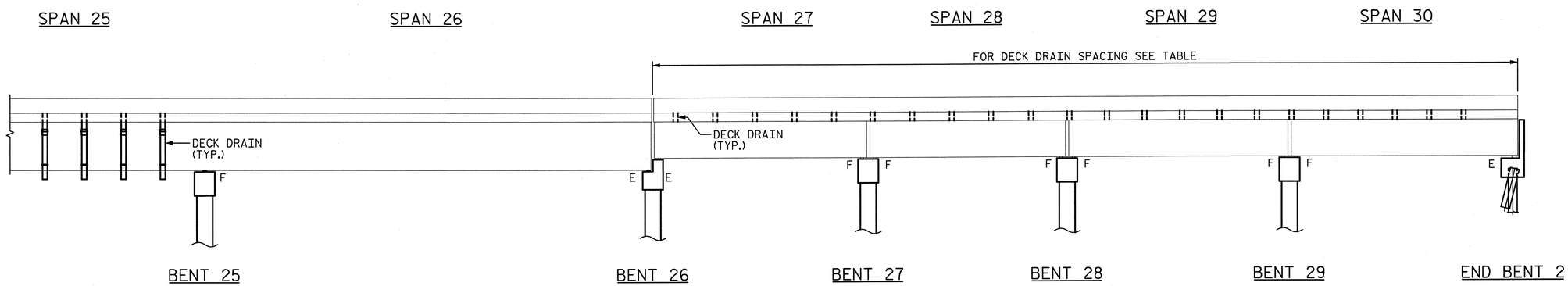

ELEVATION

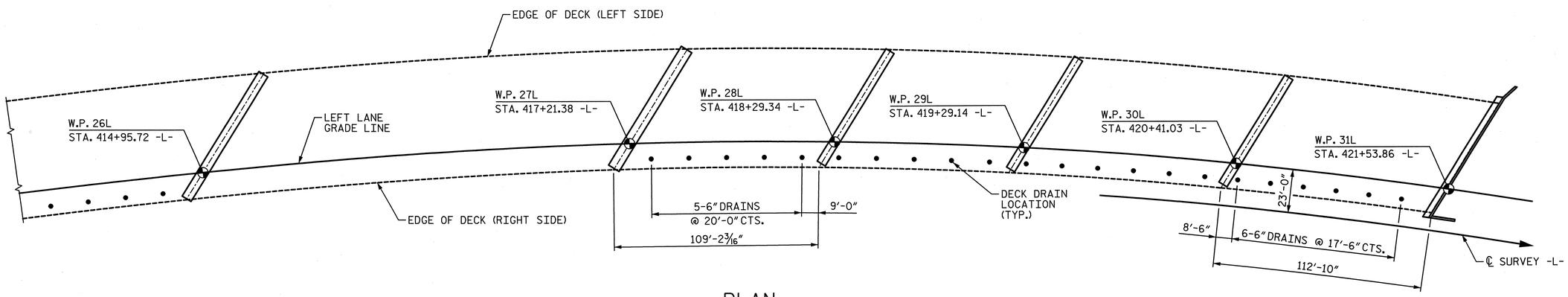

PLAN

GIRDERS NOT SHOWN FOR CLARITY

DECK DRAIN SPACING TABLE				
SPAN	A (FT.)	B (FT.)	C	D (FT.)
25	SEE SHEET 4 OF 10			
27	SEE PLAN			
28	100.90	10.45	5	20.00
29	113.08	9.04	6	19.00
30	SEE PLAN			

NOTES:

1. FOR DECK DRAIN LAYOUT DETAIL, SEE SHEET 1 OF 10.
2. FOR ADDITIONAL NOTES, SEE SHEET 10 OF 10.
3. FOR OPEN DRAIN DETAILS, SEE SHEET 8 OF 10.

PROJECT NO. U-2524C

GUILFORD COUNTY

STATION: POT 407+73.35 -L-
= POT 29+32.06 -Y4-

SHEET 5 OF 10

NORTH CAROLINA PROFESSIONAL SEAL 28479 ENGINEER KEVIN G. BAILEY
5-30-13

STATE OF NORTH CAROLINA
DEPARTMENT OF TRANSPORTATION
RALEIGH

STRUCTURE DRAINAGE SYSTEM DETAILS

-LEFT LANE-

REVISIONS						SHEET NO.
NO.	BY:	DATE:	NO.	BY:	DATE:	S-78
1			3			TOTAL SHEETS
2			4			836

STV / Ralph Whitehead Associates, Inc.
1000 West Morehead St., Ste. 200
Charlotte, NC 28208
NC License No. F-0991

DRAWN BY : ACA DATE : 10-12
CHECKED BY : TJT DATE : 3-13

DESIGN ENGINEER OF RECORD: T. TOWNSEND DATE : 5-13

5/30/2013 4:53:13 PM R:\ustation\Finals\Closed Drainage System Sheet 5 of 10.dgn

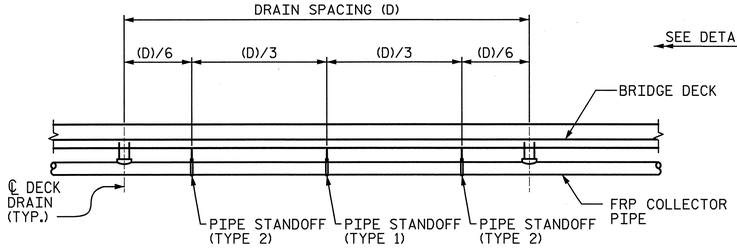

DRAIN SPACING: 15'-0" ≤ (D) ≤ 20'-0"

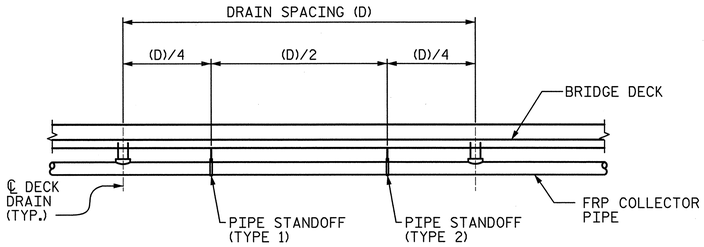

DRAIN SPACING: 11'-0" ≤ (D) ≤ 15'-0"

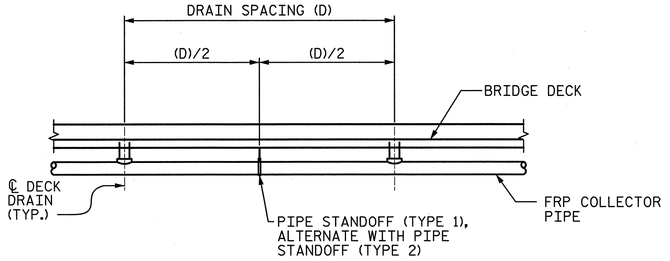

DRAIN SPACING: (D) ≤ 10'-0"

DETAIL "A"
(BETWEEN DECK DRAINS)

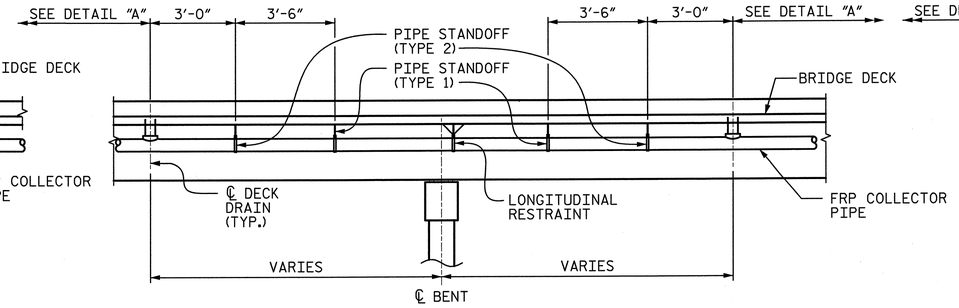

TYPE 1
(B3, B4, B9, B10, & B12)

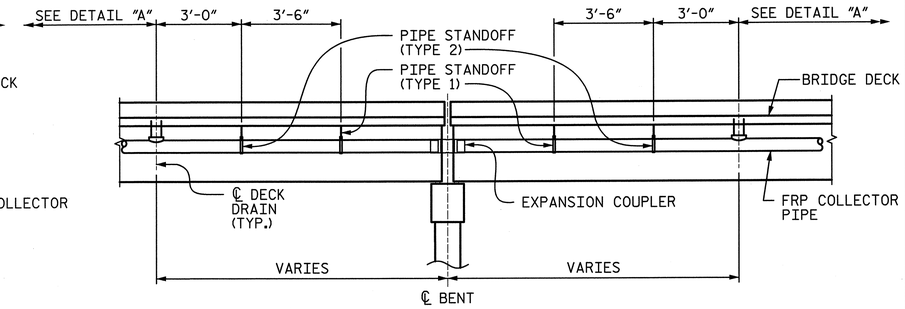

TYPE 1
(B2, B8, & B11)

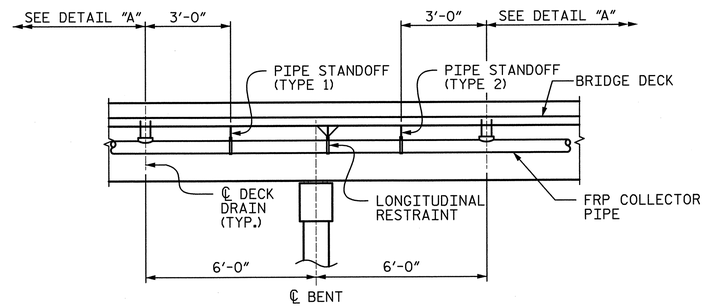

TYPE 2
(B18 & B19)

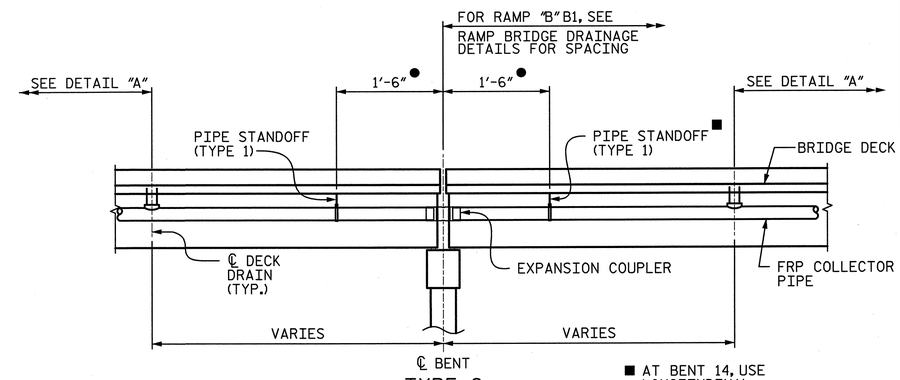

TYPE 2
(B14, RAMP "B" B1, B20, & B23)

■ AT BENT 14, USE LONGITUDINAL RESTRAINT

● AT BENT 20 & RAMP "B" BENT 1 USE 3'-0"

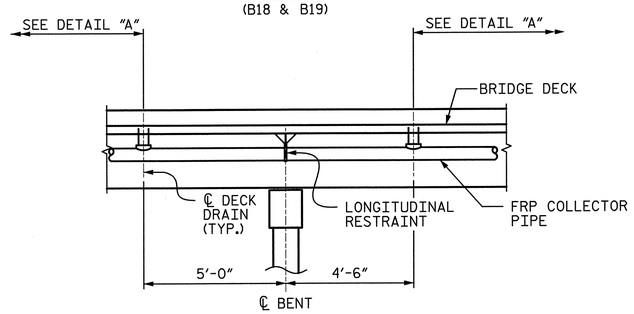

TYPE 3
(B13)

DETAIL "B"
(AT FIXED INTERIOR BENTS)

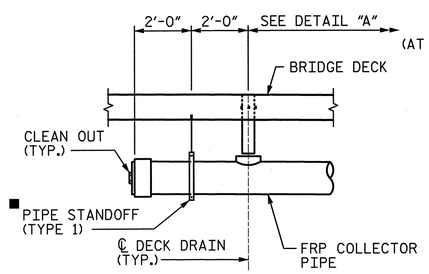

DETAIL "C"
(AT EXPANSION INTERIOR BENTS)

TYPE 1
(NEAR B15, B17, & SPAN 24)

■ IN SPAN 24, USE LONGITUDINAL RESTRAINT

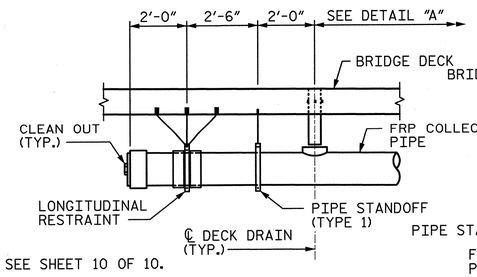

TYPE 2
(NEAR B1 & B7)

■ AT BENT 15, USE PIPE STANDOFF (TYPE 2)

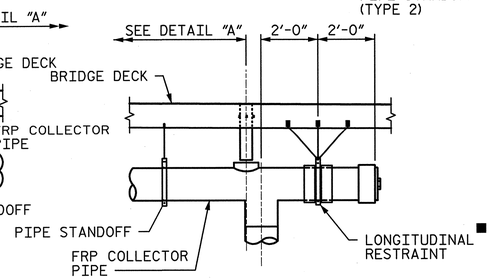

AT END OF SYSTEM

SYSTEM ENDS DETAIL

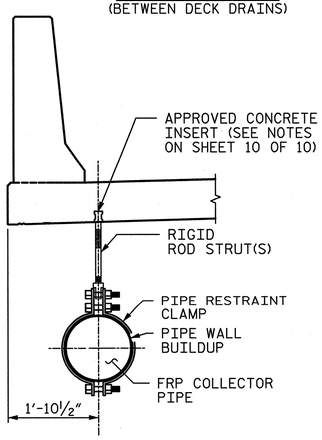

SECTION A-A

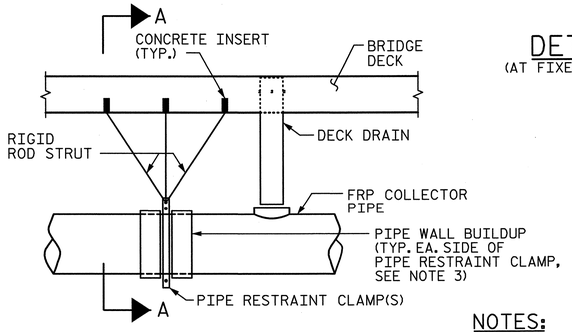

ELVEVATION VIEW

LONGITUDINAL RESTRAINT DETAIL

NOTES:

1. FOR ADDITIONAL NOTES, SEE SHEET 10 OF 10.
2. FOR ADDITIONAL COLLECTOR PIPE SUPPORT DETAILS, SEE SHEET 7 OF 10.
3. CONTRACTOR SHALL ENSURE PIPE WALL BUILDUP IS SUFFICIENT TO ENGAGE PIPE RESTRAINT CLAMP AT LONGITUDINAL RESTRAINT LOCATIONS.

NORTH CAROLINA PROFESSIONAL SEAL 28479 ENGINEER KEVIN G. BAILEY
5-30-13

PROJECT NO. U-2524C
GUILFORD COUNTY
STATION: POT 407+73.35 -L-
= POT 29+32.06 -Y4-
SHEET 6 OF 10

STATE OF NORTH CAROLINA
DEPARTMENT OF TRANSPORTATION
RALEIGH

STRUCTURE DRAINAGE SYSTEM DETAILS

-LEFT LANE-

DRAWN BY : VMW	DATE : 3-13	DESIGN ENGINEER OF RECORD: T. TOWNSEND	DATE : 5-13
CHECKED BY : TJT	DATE : 3-13		

STV / Ralph Whitehead Associates, Inc.
1000 West Morehead St., Ste. 200
Charlotte, NC 28208
NC License No. F-0991

REVISIONS								SHEET NO.
NO.	BY:	DATE:	NO.	BY:	DATE:			S-79
1			3					TOTAL SHEETS
2			4					836

R:\Ustation\Finals\Closed Drainage System Sheet 6 of 10.dgn 4:53:18 PM 5/30/2013

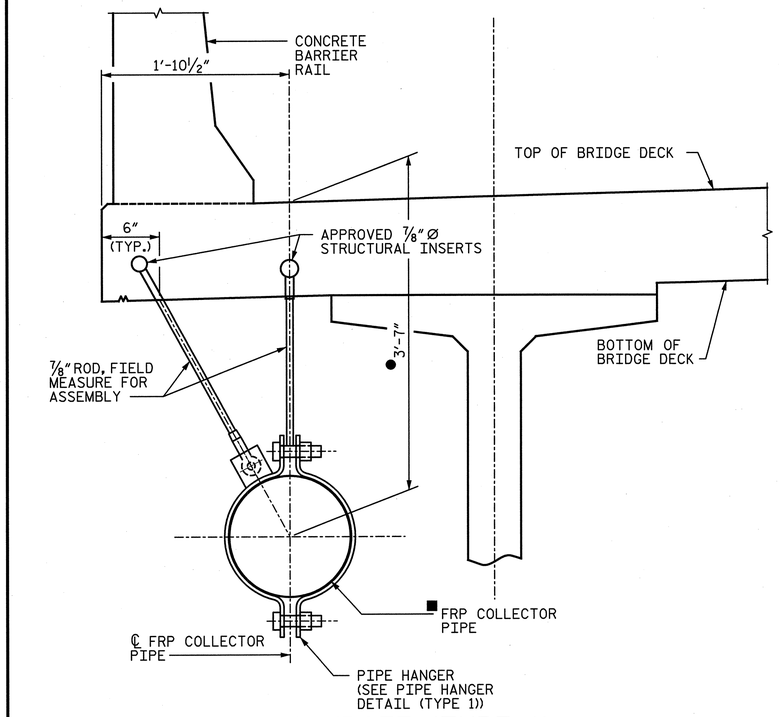

PIPE STANDOFF (TYPE 1)

ALL COMPONENTS SHALL BE GALVANIZED AFTER FABRICATION.
(CONCRETE GIRDER SPANS SHOWN, STEEL GIRDER SPANS SIMILAR)

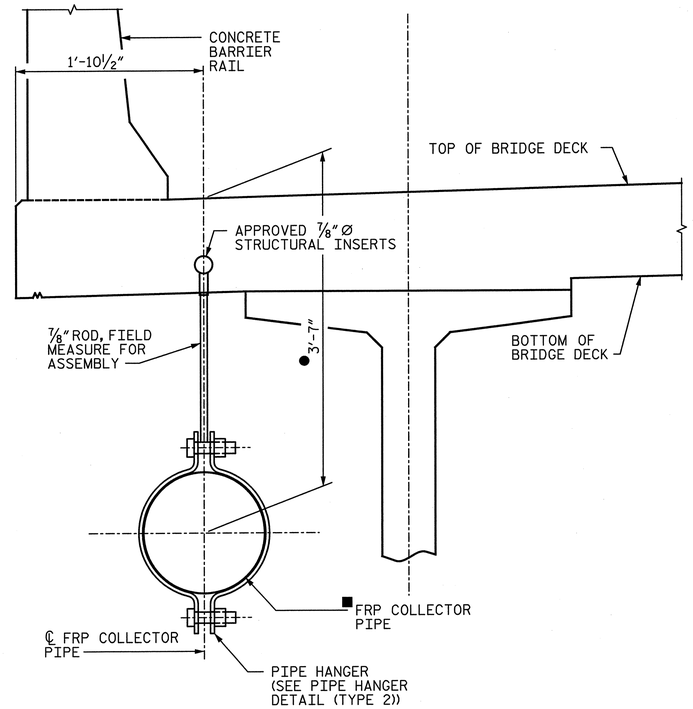

PIPE STANDOFF (TYPE 2)

ALL COMPONENTS SHALL BE GALVANIZED AFTER FABRICATION.
(CONCRETE GIRDER SPANS SHOWN, STEEL GIRDER SPANS SIMILAR)

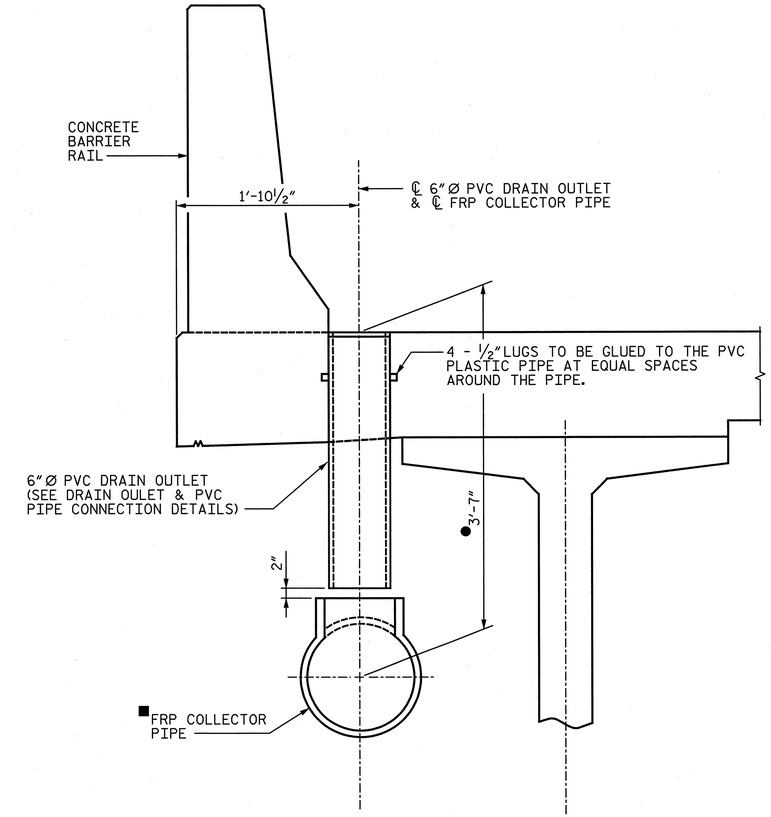

OVERHANG DRAINAGE DETAIL

(CONCRETE GIRDER SPANS SHOWN, STEEL GIRDER SPANS SIMILAR)
(CLOSED DRAINAGE SYSTEM SPANS)
(202 TOTAL)

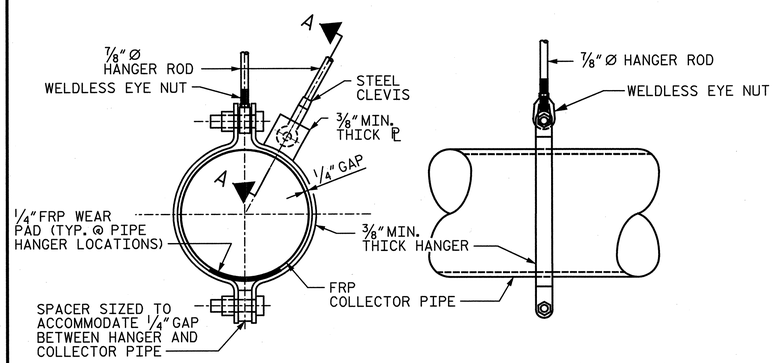

PIPE HANGER DETAIL (TYPE 1)

ALL COMPONENTS SHALL BE GALVANIZED AFTER FABRICATION

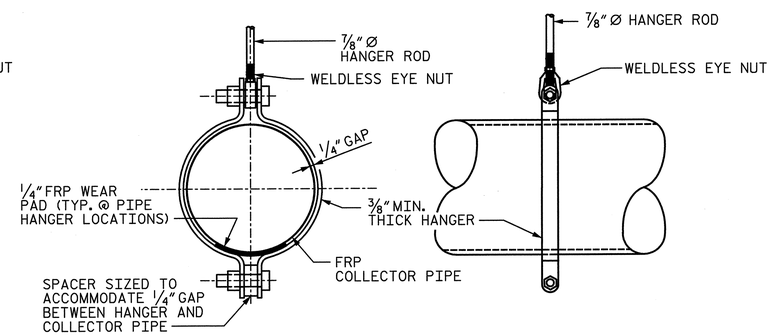

PIPE HANGER DETAIL (TYPE 2)

ALL COMPONENTS SHALL BE GALVANIZED AFTER FABRICATION

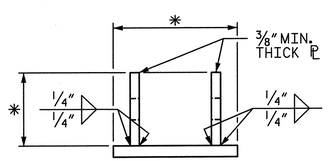

SECTION A-A

(STEEL CLEVIS & ⅞"Ø HANGER ROD NOT SHOWN FOR CLARITY)

*DIMENSIONS TO BE DETERMINED BY MANUFACTURER.

■ SEE SHEETS 1 THROUGH 5 OF 10 FOR FRP COLLECTOR PIPE SIZE.

● DIMENSION SHOWN IS AN APPROXIMATE LOCATION. FABRICATOR/CONTRACTOR SHALL ADJUST DIMENSIONS SUCH THAT PIPE MAINTAINS A MINIMUM SLOPE OF 0.5% TOWARDS THE OUTLETS.

NOTE:

FOR ADDITIONAL NOTES, SEE SHEET 10 OF 10.

PROJECT NO. U-2524C
GUILFORD COUNTY
STATION: POT 407+73.35 -L-
= POT 29+32.06 -Y4-

SHEET 7 OF 10

STATE OF NORTH CAROLINA
DEPARTMENT OF TRANSPORTATION
RALEIGH

STRUCTURE DRAINAGE SYSTEM DETAILS

-LEFT LANE-

NORTH CAROLINA PROFESSIONAL SEAL 28479 ENGINEER KEVIN G. BAILEY 5-30-13

DRAWN BY : ACA	DATE : 3-13	DESIGN ENGINEER OF RECORD: T. TOWNSEND	DATE : 5-13
CHECKED BY : TJT	DATE : 3-13		

STV / Ralph Whitehead Associates, Inc.
1000 West Morehead St., Ste. 200
Charlotte, NC 28208
NC License No. F-0991

REVISIONS						SHEET NO.
NO.	BY:	DATE:	NO.	BY:	DATE:	S-80
1			3			TOTAL SHEETS
2			4			836

5/30/2013 6:02:07 PM R:\ustation\Finals\Closed Drainage System Sheet 7 of 10.dgn

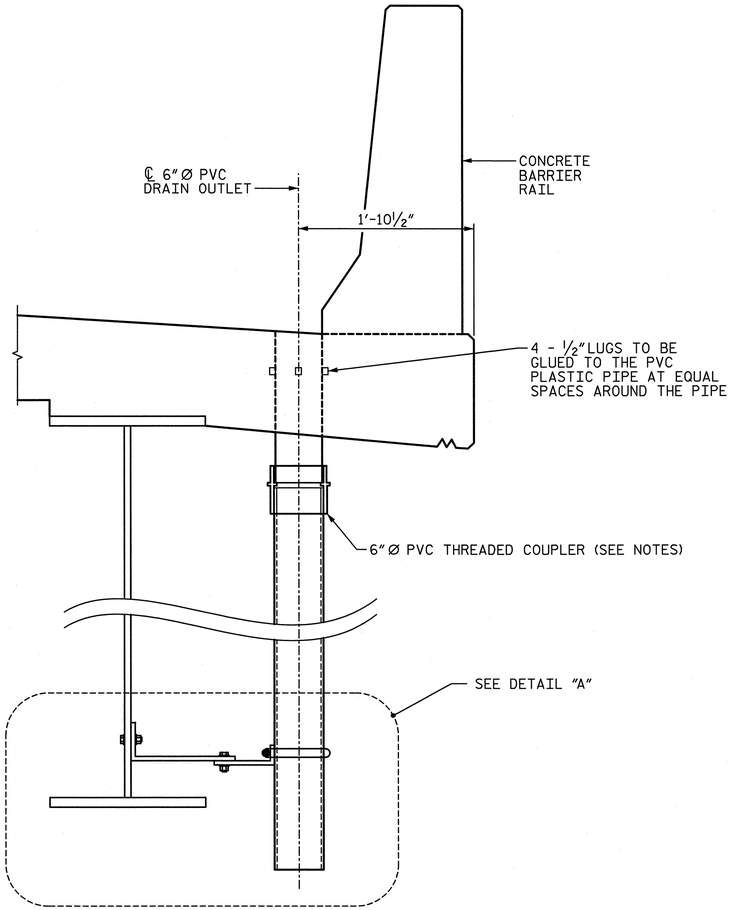

OVERHANG DRAINAGE DETAIL

(SPANS 24 & 25)
(21 TOTAL)

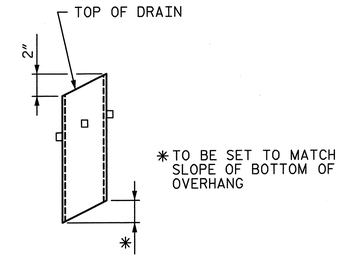

PIPE DETAIL

(22 TOTAL)

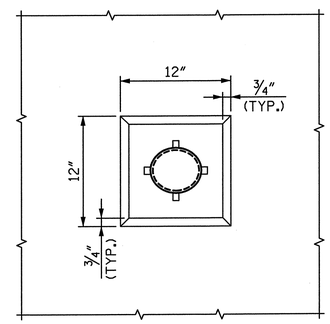

PLAN OF RECESS

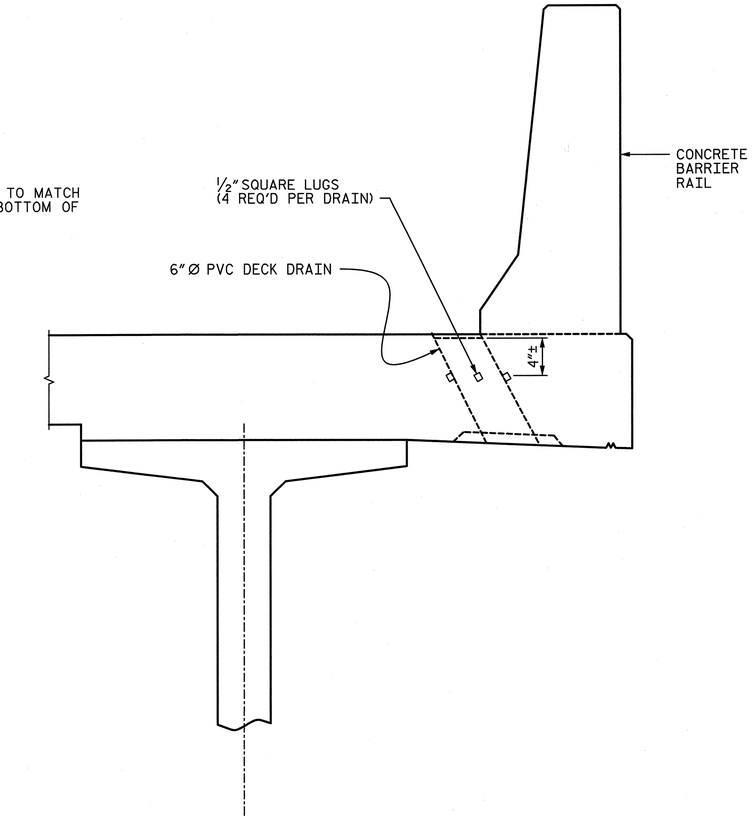

OVERHANG DRAINAGE DETAIL

(SPANS 27 - 30)

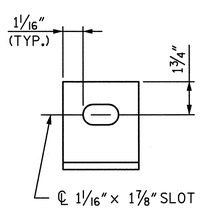

SECTION B-B

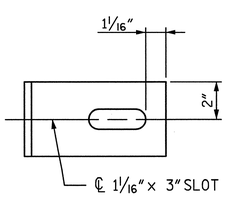

SECTION A-A

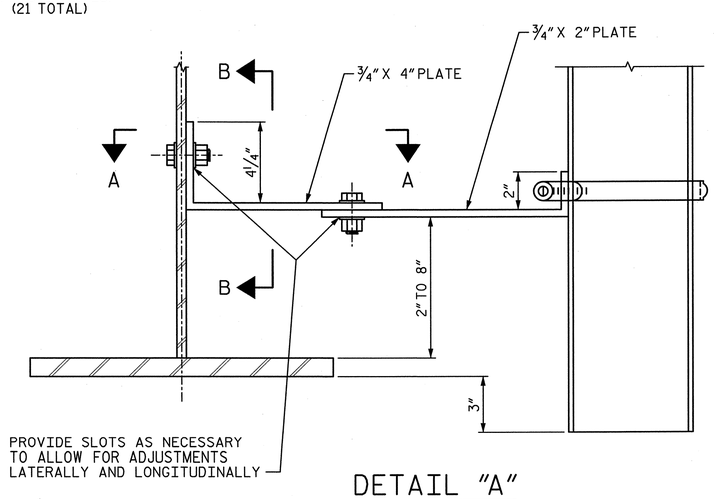

DETAIL "A"

NOTES:

1. TOP OF DECK DRAIN TO BE SET ⅜" BELOW SURFACE OF SLAB.
2. 4 - ½" SQUARE LUGS TO BE GLUED TO THE PVC PLASTIC PIPE AT EQUAL SPACES AROUND THE PIPE DRAIN APPROXIMATELY 4" FROM THE TOP OF PIPE.
3. THE 6"Ø PVC PLASTIC PIPE AND FITTINGS SHALL BE SCHEDULE 40 AND CONFORM TO ASTM D1785.
4. BOLT SIZE TO BE SAME AS DIAPHRAGMS AND CROSS FRAME CONNECTIONS. STAINLESS STEEL WORM DRIVE HOSE CLAMP SHALL BE COMMERCIAL QUALITY.
5. PLATES SHALL CONFORM TO AASHTO M270 GRADE 50 STEEL OR APPROVED EQUAL.
6. SEE SHEETS 4 AND 5 OF 10 FOR DRAIN LOCATIONS.
7. SEE SHEET 10 OF 10 FOR ADDITIONAL NOTES.
8. COUPLING IN DRAIN PIPE WILL BE PERMITTED AS APPROVED BY THE ENGINEER.

NORTH CAROLINA PROFESSIONAL SEAL 28479 ENGINEER KEVIN G. BAILEY
5-30-13

PROJECT NO. U-2524C
GUILFORD COUNTY
STATION: POT 407+73.35 -L-
= POT 29+32.06 -Y4-

SHEET 8 OF 10

STATE OF NORTH CAROLINA
DEPARTMENT OF TRANSPORTATION
RALEIGH

STRUCTURE
DRAINAGE
SYSTEM DETAILS

-LEFT LANE-

REVISIONS						SHEET NO.
NO.	BY:	DATE:	NO.	BY:	DATE:	S-81
1			3			TOTAL SHEETS
2			4			836

STV / Ralph Whitehead Associates, Inc.
1000 West Morehead St., Ste. 200
Charlotte, NC 28208
NC License No. F-0991

DRAWN BY : ACA DATE : 3-13
CHECKED BY : TJT DATE : 3-13
DESIGN ENGINEER OF RECORD: T. TOWNSEND DATE : 5-13

5/30/2013 4:53:26 PM R:\struction\Finals\Closed Drainage System Sheet 8 of 10.dgn

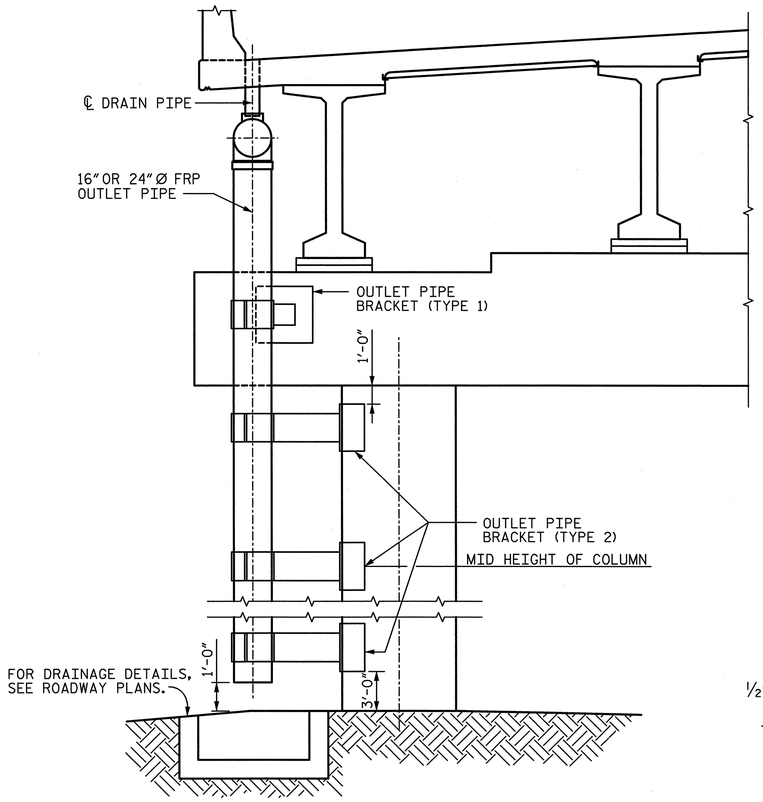

DRAIN PIPE ELEVATION

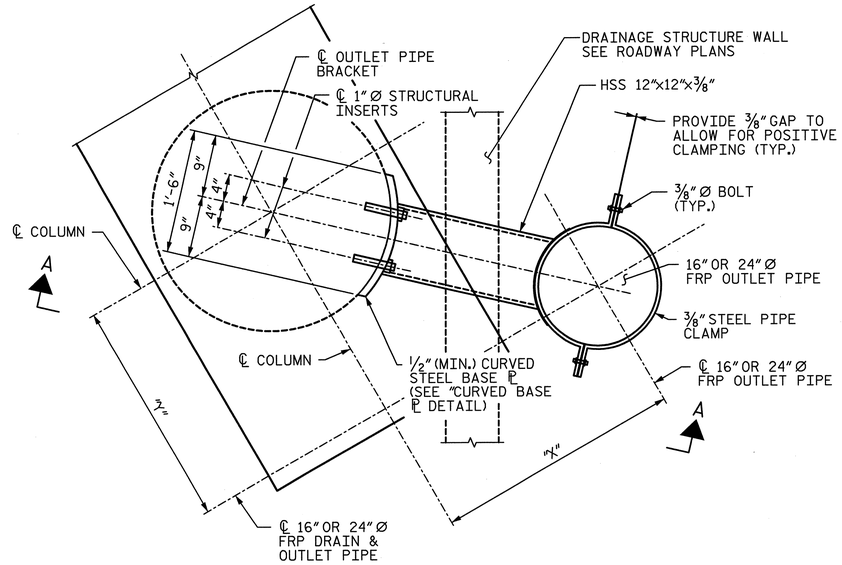

PLAN

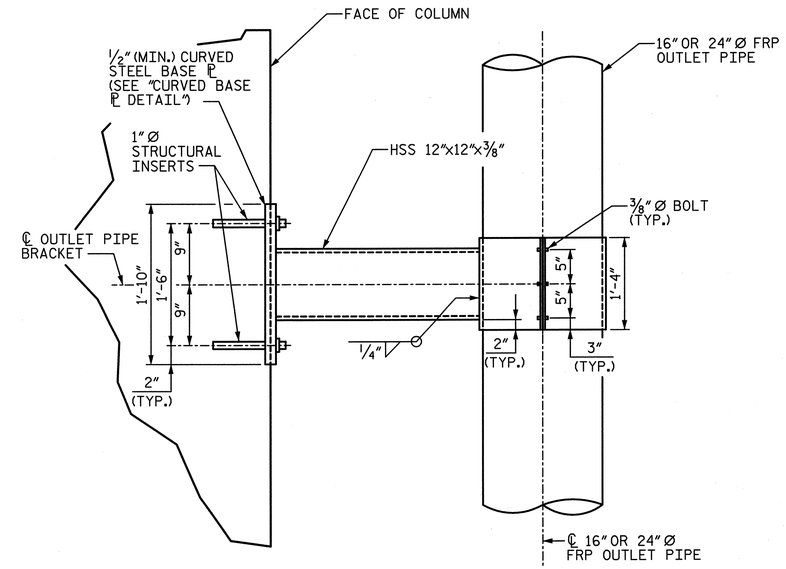

VIEW A-A

OUTLET PIPE BRACKET (TYPE 2)

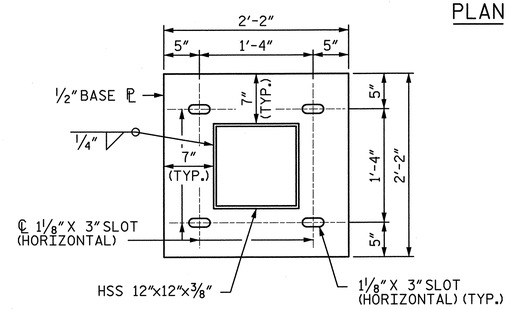

BASE ℙ DETAIL

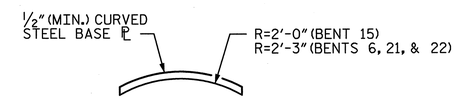

END VIEW

OUTLET PIPE BRACKET TABLE			
BENT	X (FT.)	Y (FT.)	SIDE OF BENT■
5	5.50	-2.92	LEFT
15	4.33	4.99	LEFT
21	4.75	3.75	LEFT
22	4.75	3.75	RIGHT

■LOOKING UPSTATION

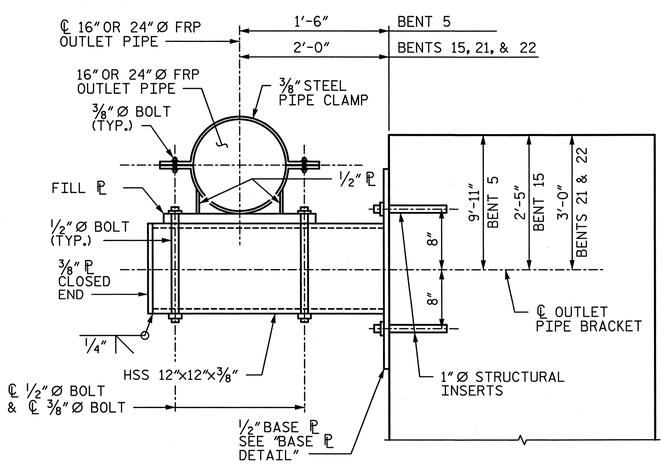

PLAN

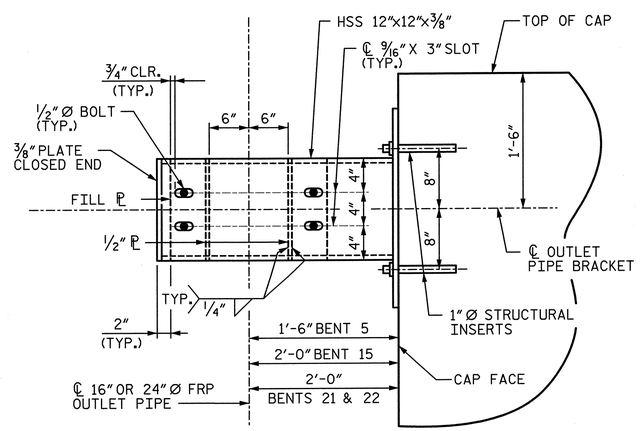

ELEVATION

OUTLET PIPE BRACKET (TYPE 1)

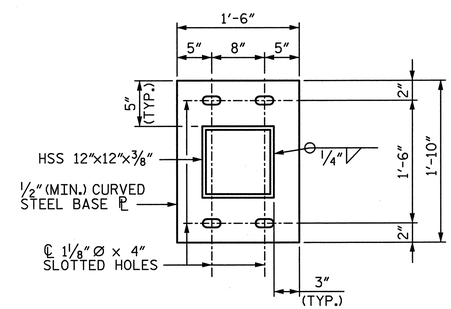

ELEVATION

CURVED BASE ℙ DETAIL

NOTES:

1. FOR NOTES, SEE SHEET 10 OF 10.

PROJECT NO. U-2524C

GUILFORD COUNTY

STATION: POT 407+73.35 -L-
= POT 29+32.06 -Y4-

SHEET 9 OF 10

NORTH CAROLINA PROFESSIONAL SEAL 28479 ENGINEER KEVIN G. BAILEY 5-30-13

STATE OF NORTH CAROLINA
DEPARTMENT OF TRANSPORTATION
RALEIGH

STRUCTURE DRAINAGE SYSTEM DETAILS

-LEFT LANE-

DRAWN BY : CLG	DATE : 3-13	DESIGN ENGINEER OF RECORD: T. TOWNSEND	DATE : 5-13
CHECKED BY : TJT	DATE : 3-13		

STV / Ralph Whitehead Associates, Inc.
1000 West Morehead St., Ste. 200
Charlotte, NC 28208
NC License No. F-0991

REVISIONS							
NO.	BY:	DATE:	NO.	BY:	DATE:	SHEET NO.	S-82
1			3			TOTAL SHEETS	83
2			4				

R:\station\Finals\Closed Drainage System Sheet 9 of 10.dgn 4:53:31PM 5/30/2013

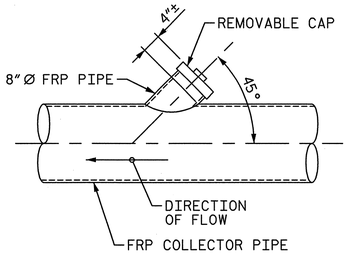

CLEANOUT DETAIL

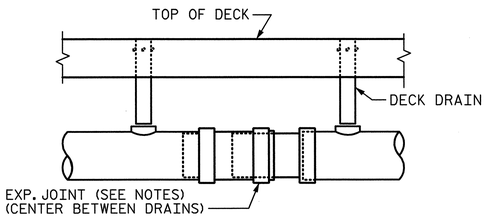

EXPANSION COUPLER

DRAINAGE SYSTEM NOTES

THE ENTIRE COST FOR THE LABOR AND MATERIALS NECESSARY TO FABRICATE AND INSTALL FRP PIPE, PIPE SUPPORT AND PIPE ANCHOR ASSEMBLIES SHALL BE INCLUDED IN THE LUMP SUM PRICE BID FOR THE "STRUCTURE DRAINAGE SYSTEM." SEE SPECIAL PROVISIONS FOR STRUCTURE DRAINAGE SYSTEM.

ALL COLLECTOR PIPES, ELBOWS, COUPLERS, AND TEES SHALL BE FIBERGLASS REINFORCED PLASTIC PIPE MEETING THE SPECIFICATIONS OF ASTM D2996 AND THE ACCELERATED UV WEATHERING PERFORMANCE REQUIREMENTS OF ASTM D4329-05 PER PROCEDURE ASTM G154.

EACH PIPE SECTION SHALL HAVE A MINIMUM OF TWO HANGERS.

COLLECTOR PIPE SHALL BE SUPPORTED FROM THE CONCRETE DECK SLAB. NO ATTACHMENT TO THE GIRDERS WILL BE PERMITTED.

CONTRACTOR SHALL PROVIDE FRP COUPLINGS CAPABLE OF HANDLING THE ANTICIPATED MOVEMENTS. ADDITIONALLY FRP COUPLINGS SHALL PROVIDE HORIZONTAL ALIGNMENT TOLERANCES SUCH THAT THE 16"Ø OR 24"Ø FRP COLLECTOR PIPE AND COUPLINGS CAN CLOSELY FOLLOW THE VERTICAL AND HORIZONTAL CURVE OF THE STRUCTURE.

THE CONTRACTOR SHALL BE RESPONSIBLE FOR DETERMINING THE HORIZONTAL AND VERTICAL ALIGNMENT OF THE DRAINAGE SYSTEM USING NECESSARY FITTINGS, TEES, AND WYES TO PROVIDE A CONTINUOUS DRAINAGE SYSTEM.

CONCRETE INSERTS SHALL HAVE A MINIMUM WORKING LOAD TENSION CAPACITY OF 4.5 KIPS.

CONTRACTOR SHALL VERIFY LOCATION OF CONCRETE INSERTS IN REGARD TO ADJACENT INSERTS AND DECK DRAINS. IF SPACING/LOCATION OF INSERTS RESULTS IN REDUCED INSERT CAPACITY, CONTRACTOR SHALL SUBMIT INSERT SYSTEM WITH APPROPRIATE CAPACITY, GIVEN CONSTRAINTS, OR PROVIDED ALTERNATE CONNECTION/SUPPORT DETAIL FOR REVIEW AND APPROVAL OF THE ENGINEER PRIOR TO INSTALLATION.

DECK DRAIN PIPE SHALL BE ASTM D1785, SCHEDULE 40. ALL PVC FITTINGS SHALL BE MINIMUM ASTM D2665, SCHEDULE 40.

EXPANSION JOINT COUPLERS IN THE COLLECTOR PIPE SHALL HAVE A MINIMUM CAPACITY TO ACCOMMODATE 6-INCHES OF TOTAL MOVEMENT (3-INCHES EXPANSION/3-INCHES CONTRACTION).

AN OPTIONAL DETAIL FOR THE LONGITUDINAL RESTRAINTS AND THE LATERAL GUIDE MAY BE SUBMITTED FOR APPROVAL.

COLLECTOR PIPE SUPPORTS SHALL BE LOCATED WITHIN 12-INCHES, ± 4-INCHES, OF A COLLECTOR PIPE JOINT.

DECK DOWN-DRAIN PIPES SHALL BE CENTERED IN SLOTTED OPENING IN COLLECTOR PIPE REGARDLESS OF TEMPERATURE AT TIME OF INSTALLATION.

HANGER RODS SHALL BE ASTM A193, GRADE B7 OR CARBON STEEL ALL-THREAD HANGER RODS.

NUTS SHALL BE ASTM A194, GRADE 2H, HEAVY HEX NUTS.

THE DETAILS OF ALL PIPING, HARDWARE, OR OTHER MATERIAL SHALL BE PROVIDED BY THE CONTRACTOR AND IS SUBJECT TO THE APPROVAL OF THE ENGINEER.

AT LOCATIONS OF "KINKS" IN THE DRAINAGE SYSTEM AT BENT LOCATIONS DUE TO FLARING OF DECK, FIXED AND/OR EXPANSION COUPLERS SHALL BE DESIGNED FOR THE RESULTING HORIZONTAL ANGLE.

WORKING DRAWINGS FOR THE DRAINAGE SYSTEM AND LAYOUT PLANS INCLUDING, BUT NOT LIMITED TO, PIPE SUPPORT BRACKETS, PIPE ALIGNMENT, PIPE LENGTHS, AND ALL NECESSARY FITTINGS, ELBOWS, WYES, ADAPTERS, GUIDES, RESTRAINTS, WEAR PADS, COUPLERS AND JOINTS SHALL BE DESIGNED AND SEALED BY A PROFESSIONAL ENGINEER LICENSED IN NORTH CAROLINA AND SUBMITTED FOR APPROVAL PRIOR TO ORDERING MATERIALS.

PIPE MANUFACTURER SHALL ENSURE THE PIPE AND THE PIPE SUPPORT BEARING AREA IS DESIGNED IN ACCORDANCE WITH THE HANGER SPACING PROVIDED IN THESE PLANS.

PIPE DESIGN MUST ALLOW VERTICAL FLEXURE FROM THE SUPERSTRUCTURE.

THE COLLECTOR PIPE SHALL CLOSELY FOLLOW THE LONGITUDINAL GRADE OF THE STRUCTURE WHILE MAINTAINING A MINIMUM OF 0.5% SLOPE AT ALL TIMES.

COUPLERS SHALL BE DESIGNED TO ACCOMMODATE A TURN AT EACH BENT IN ORDER TO FOLLOW THE HORIZONTAL AND VERTICAL CURVATURE OF THE BRIDGE OVERHANG.

THE PIPE MANUFACTURER SHALL ENSURE THE FRICTIONAL FORCE REQUIRED TO ACTIVATE THE EXPANSION COUPLERS DOES NOT OVERSTRESS THE COUPLER WALL BUILD-UP, DRAINAGE SYSTEM BRACKETS SUPPORTS OR LATERAL RESTRAINTS.

WASHERS SHALL BE ASTM F436 OR APPROVED EQUIVALENT.

BOLTS, NUTS, AND WASHERS SHALL BE GALVANIZED IN ACCORDANCE WITH THE STANDARD SPECIFICATIONS.

BOLT THREADS SHALL BE BURRED TO PREVENT LOOSENING.

PVC PIPE SHALL BE PAINTED TO MATCH THE FINAL SURFACE FINISH OF THE STRUCTURE WITH TWO COATS OF AN ACRYLIC OR LATEX PAINT THAT IS CHEMICALLY COMPATIBLE WITH PVC PRODUCTS AND MEETS THE REQUIREMENTS OF ARTICLE 1080-12 OF THE STANDARD SPECIFICATIONS. EACH COAT SHALL BE 2 DRY MILS THICK. DECK DRAINS SHALL BE ROUGHENED PRIOR TO PAINTING.

ALL METALLIC COMPONENTS IN THE DRAINAGE SYSTEM, EXCEPT STAINLESS STEEL AND MALLEABLE IRON PARTS, ARE REQUIRED TO BE HOT-DIPPED GALVANIZED PER NCDOT STANDARD SPECIFICATIONS. ELECTRO-PLATE COATING ON STEEL RODS, STEEL YOKE TYPE PIPE ROLLS, BRACKETS, OTHER STEEL HARDWARE IS CONSIDERED BY NCDOT AS TOO THIN FOR OUTDOOR APPLICATIONS.

ALL FRP AND PVC PIPE SHALL BE INSTALLED PER MANUFACTURER'S RECOMMENDATIONS.

ALL STRUCTURAL STEEL SHALL BE ASTM A36 OR APPROVED EQUAL UNLESS NOTED OTHERWISE.

THE GALVANIZED SURFACE SHALL BE CLEANED TO (SSPC SP-1) PRIOR TO COATING.

ALL FABRICATION SHALL CONFORM TO THE APPLICABLE SECTION OF THE NORTH CAROLINA DEPARTMENT OF TRANSPORTATION STANDARD SPECIFICATIONS FOR ROADS AND STRUCTURES.

ALL FRP SHALL BE PIGMENTED TO MATCH THE FINAL SURFACE FINISH OF THE STRUCTURE.

ALL FRP PIPE SIZES ARE SHOWN AS INSIDE DIAMETER SIZES.

FRP = FIBERGLASS REINFORCED PLASTIC

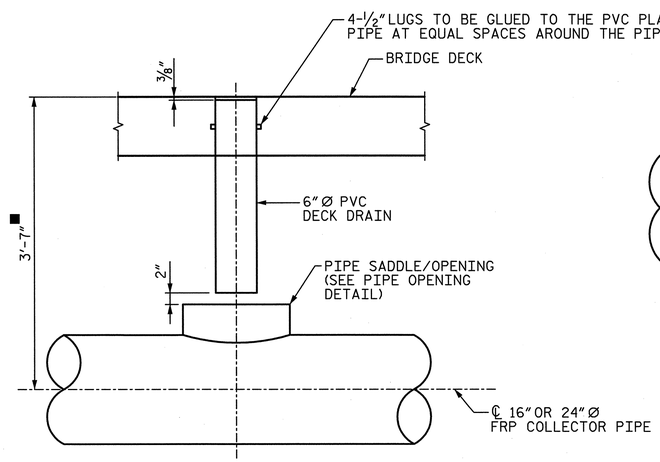

DRAIN OUTLET & PIPE CONNECTION

■ DIMENSION SHOWN IS AN APPROXIMATE LOCATION. FABRICATOR/CONTRACTOR SHALL ADJUST DIMENSIONS SUCH THAT PIPE MAINTAINS A MINIMUM SLOPE OF 0.5% TOWARDS THE OUTLETS.

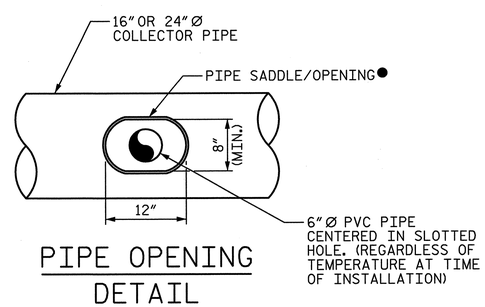

PIPE OPENING DETAIL

● FABRICATOR SHALL DETERMINE PIPE SADDLE/REINFORCEMENT FOR OPENING SIZE INDICATED. FABRICATOR SHALL SUBMIT SHOP DRAWINGS OF PIPE SADDLE/OPENING FOR REVIEW PRIOR TO BEGINNING FABRICATION.

PROJECT NO. U-2524C
GUILFORD COUNTY
STATION: POT 407+73.35 -L-
= POT 29+32.06 -Y4-

SHEET 10 OF 10

STATE OF NORTH CAROLINA
DEPARTMENT OF TRANSPORTATION
RALEIGH

STRUCTURE
DRAINAGE
SYSTEM DETAILS

-LEFT LANE-

NORTH CAROLINA PROFESSIONAL SEAL 28479 ENGINEER KEVIN G. BAILEY
5-30-13

STV / Ralph Whitehead Associates, Inc.
1000 West Morehead St., Ste. 200
Charlotte, NC 28208
NC License No. F-0991

REVISIONS						SHEET NO.
NO.	BY:	DATE:	NO.	BY:	DATE:	S-83
1			3			TOTAL SHEETS
2			4			83C

DRAWN BY : CLG DATE : 3-13
CHECKED BY : TJT DATE : 3-13
DESIGN ENGINEER OF RECORD: T. TOWNSEND DATE : 5-13

5/30/2013 4:53:35 PM R:\ustation\Finals\Closed Drainage System Sheet 10 of 10.dgn

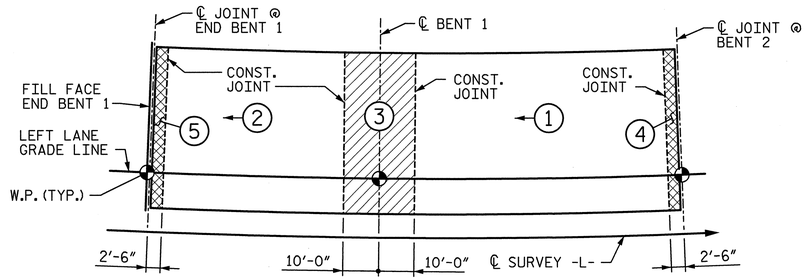

UNIT A (SPANS 1 & 2)

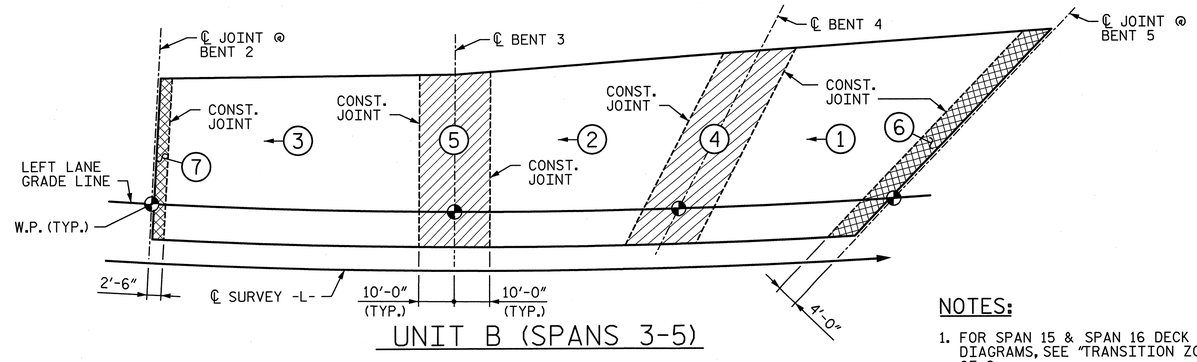

UNIT B (SPANS 3-5)

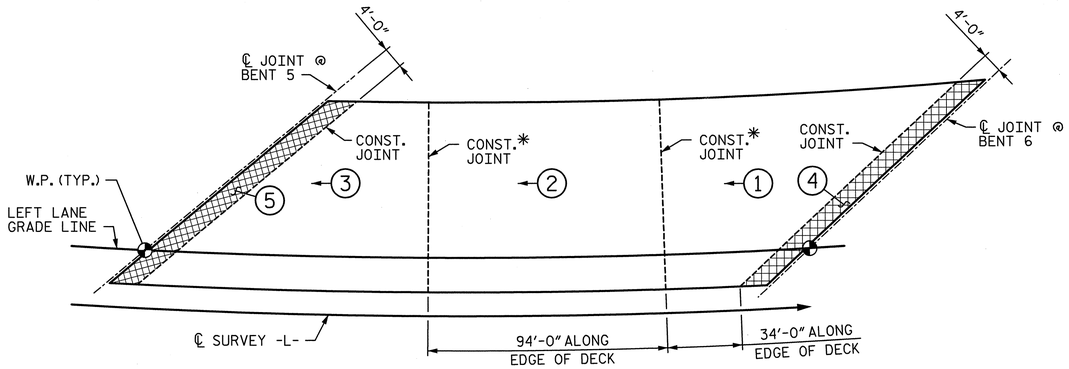

SPAN 6

*CONSTRUCTION JOINT IS RADIAL

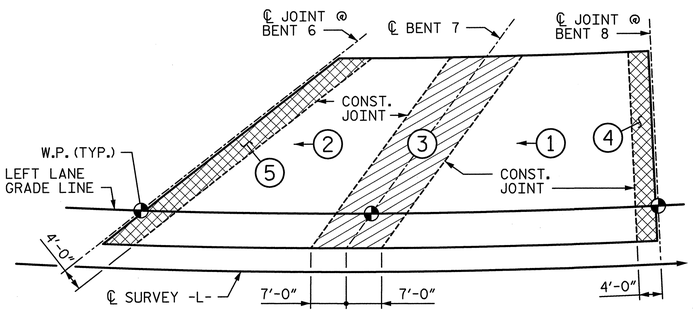

UNIT C (SPANS 7 & 8)

NOTES:

1. FOR SPAN 15 & SPAN 16 DECK POUR DIAGRAMS, SEE "TRANSITION ZONE DETAILS" SHEET 2 OF 2.
2. FOR DECK POUR CONCRETE QUANTITIES AND CONSTRUCTION JOINT DETAILS, SEE SHEET 2 OF 2.
3. NO CLOSURE POURS SHALL OCCUR UNTIL THE CONCRETE IN ADJACENT SPANS HAVE OBTAINED A STRENGTH OF 3.0 KSI.

LEGEND:

DECK CLOSURE POUR AT JOINTS

DECK CLOSURE POUR AT CONTINUOUS BENTS

POUR NUMBER

DIRECTION OF POUR

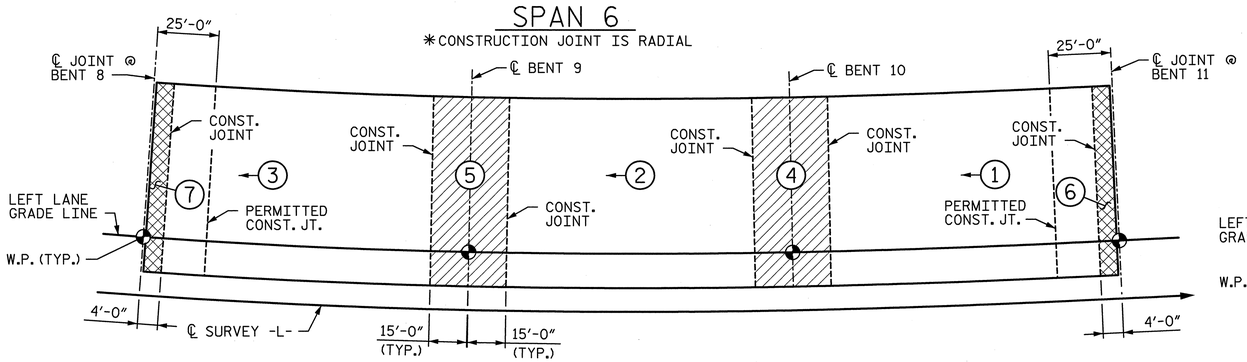

UNIT D (SPANS 9-11)

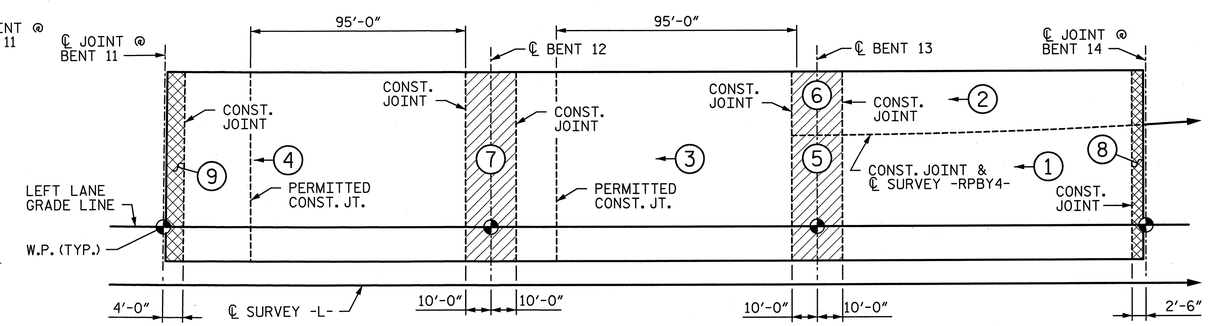

UNIT E (SPANS 12-14)

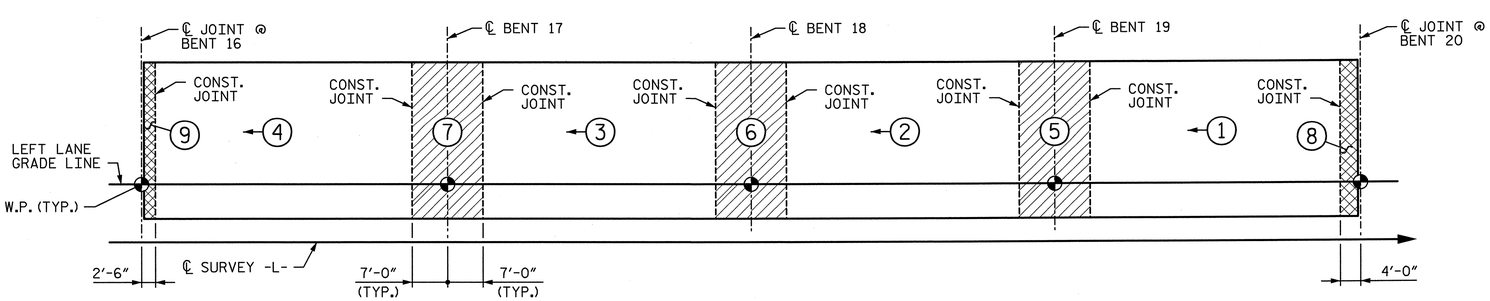

UNIT F (SPANS 17-20)

PROJECT NO. U-2524C

GUILFORD COUNTY

STATION: POT 407+73.35 -L-
= POT 29+32.06 -Y4-

SHEET 1 OF 2

STATE OF NORTH CAROLINA
DEPARTMENT OF TRANSPORTATION
RALEIGH

SUPERSTRUCTURE DECK POUR DIAGRAMS

-LEFT LANE-

NORTH CAROLINA PROFESSIONAL SEAL 28479 ENGINEER KEVIN G. BAILEY 5-30-13

DRAWN BY : VMW	DATE : 11-12	DESIGN ENGINEER OF RECORD: T. TOWNSEND	DATE : 5-13
CHECKED BY : TJT	DATE : 2-13		

STV / Ralph Whitehead Associates, Inc.
1000 West Morehead St., Ste. 200
Charlotte, NC 28208
NC License No. F-0991

REVISIONS

NO.	BY:	DATE:	NO.	BY:	DATE:
1			3		
2			4		

SHEET NO. S-84

TOTAL SHEETS 836

R:\ustation\Finals\Deck Pour Diagrams Sheet 1 of 2.dgn 5/30/2013 4:53:40 PM

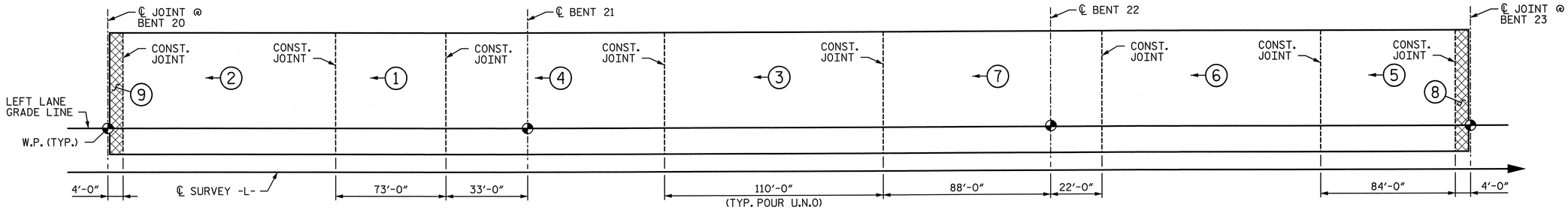

UNIT G (SPANS 21-23)

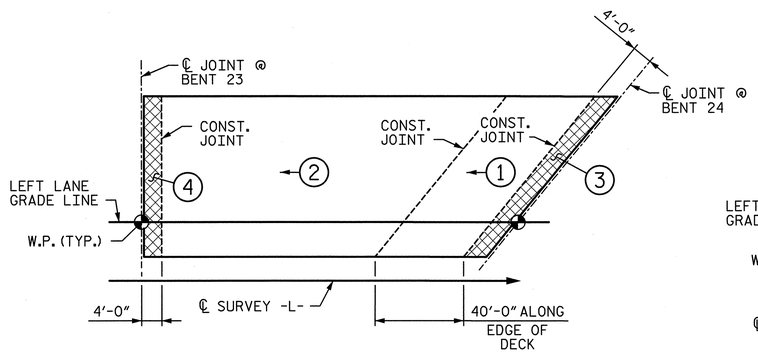

SPAN 24

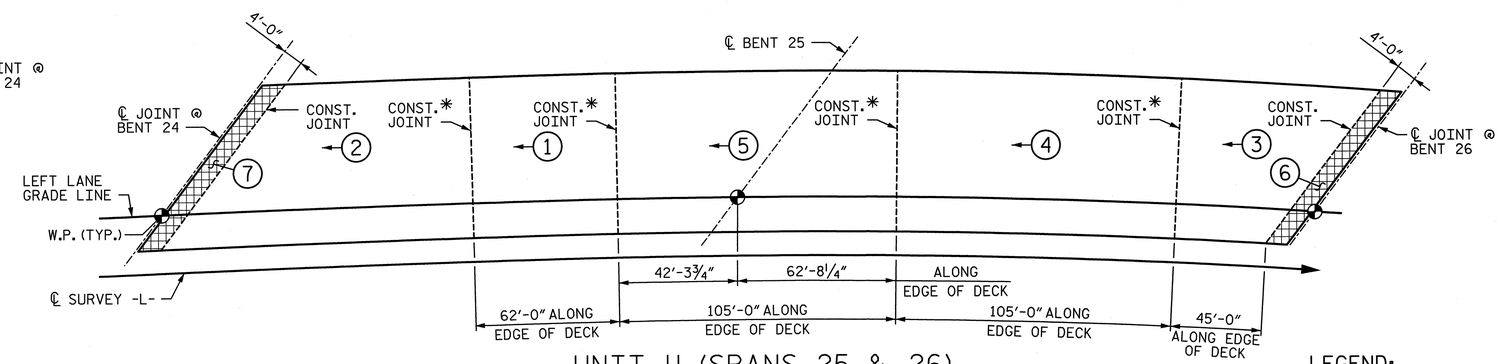

UNIT H (SPANS 25 & 26)

✱ CONSTRUCTION JOINT IS RADIAL

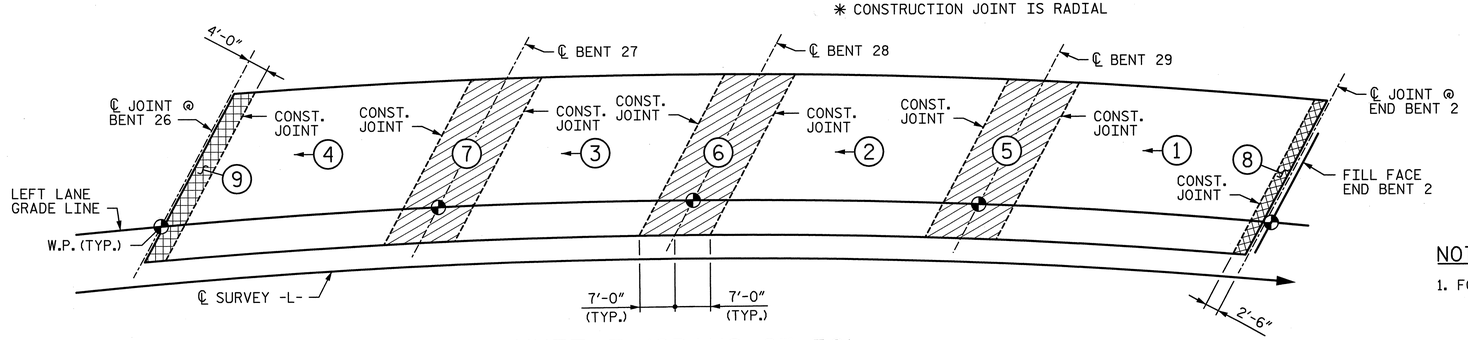

UNIT I (SPANS 27-30)

LEGEND:

- DECK CLOSURE POUR AT JOINTS
- DECK CLOSURE POUR AT CONTINUOUS BENTS
- POUR NUMBER
- DIRECTION OF POUR

NOTES:

1. FOR NOTES, SEE SHEET 1 OF 2.

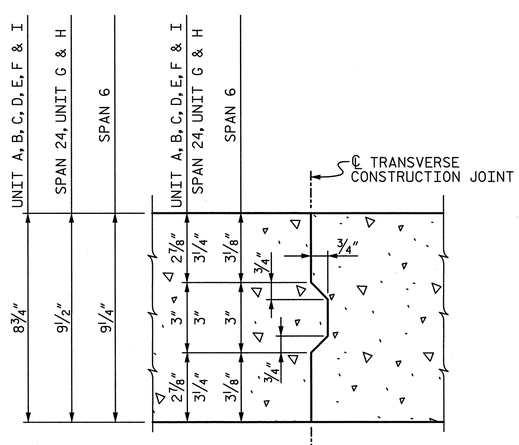

NOTE : REINFORCING STEEL IN SLAB NOT SHOWN. TRANSVERSE & LONGITUDINAL REINFORCING STEEL SHALL BE CONTINUOUS THROUGH JOINT.

CONSTRUCTION JOINT IN DECK SLAB

DECK POUR CONCRETE QUANTITIES

LOCATION	POUR QUANTITY (CU. YDS.) 1	2	3	4	5	6	7	8	9	TOTAL
UNIT A	238.6	173.7	73.4	8.8	8.8					503.3
UNIT B	207.9	200.0	240.8	101.2	77.6	22.4	8.9			858.8
SPAN 6	207.2	244.7	203.3	22.9	21.7					699.8
UNIT C	214.6	166.7	96.0	14.2	23.7					515.2
UNIT D	296.8	265.0	293.8	116.9	116.9	15.7	14.6			1,119.7
UNIT E	205.7	99.1	285.1	299.5	58.6	28.2	86.9	10.4	15.4	1,088.9
SPAN 15	205.9	95.2	27.8	11.8	10.4					351.1
SPAN 16	207.4	97.3	57.2	15.2	13.9	11.7				402.7
UNIT F	229.6	222.8	222.8	232.4	56.5	56.5	56.5	12.2	8.4	1,097.7
UNIT G	163.1	245.7	245.7	245.7	187.7	245.7	245.7	11.6	11.6	1,602.5
SPAN 24	89.1	249.9	15.5	11.6						366.1
UNIT H	141.6	232.1	150.5	240.9	240.3	15.0	15.6			1,036.0
UNIT I	229.2	220.1	193.0	216.1	71.3	72.2	73.1	10.0	14.9	1,099.9
TOTAL CLASS AA CONCRETE (CU. YDS.)										10,741.7

PROJECT NO. U-2524C
GUILFORD COUNTY
STATION: POT 407+73.35 -L-
= POT 29+32.06 -Y4-
SHEET 2 OF 2

STATE OF NORTH CAROLINA
DEPARTMENT OF TRANSPORTATION
RALEIGH

NORTH CAROLINA PROFESSIONAL SEAL 28479 ENGINEER KEVIN G. BAILEY 5-30-13

STV / Ralph Whitehead Associates, Inc.
1000 West Morehead St., Ste. 200
Charlotte, NC 28208
NC License No. F-0991

SUPERSTRUCTURE DECK POUR DIAGRAMS

-LEFT LANE-

REVISIONS NO.	BY:	DATE:	NO.	BY:	DATE:
1			3		
2			4		

SHEET NO. S-85
TOTAL SHEETS 836

DRAWN BY : VMW DATE : 11-12
CHECKED BY : TJT DATE : 2-13
DESIGN ENGINEER OF RECORD: T. TOWNSEND DATE : 5-13

5/30/2013 4:53:45 PM R:\ustation\Finals\Deck Pour Diagrams Sheet 2 of 2.dgn

NOTES:

1. FOR THE LOCATION OF FORMED HOLES FOR THE INTERMEDIATE STEEL DIAPHRAGMS IN GIRDERS, SEE "PRESTRESSED CONCRETE MODIFIED BULB TEE GIRDER DIAPHRAGM DETAILS" SHEET.

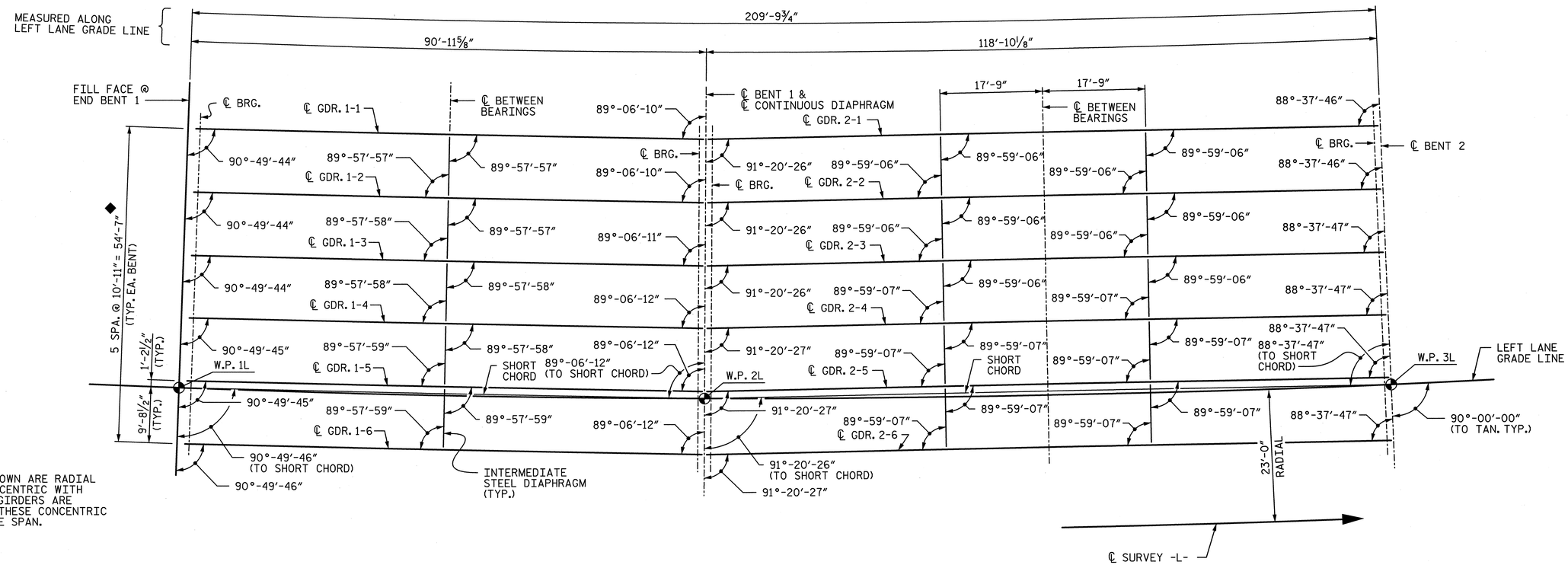

◆ DIMENSIONS SHOWN ARE RADIAL TO CURVES CONCENTRIC WITH ℄ SURVEY -L-. GIRDERS ARE ON CHORDS OF THESE CONCENTRIC CURVES FOR THE SPAN.

FRAMING PLAN - UNIT A

PROJECT NO. U-2524C

GUILFORD COUNTY

STATION: POT 407+73.35 -L-
= POT 29+32.06 -Y4-

SHEET 1 OF 14

STATE OF NORTH CAROLINA
DEPARTMENT OF TRANSPORTATION
RALEIGH

FRAMING PLAN UNIT A SPANS 1 & 2

-LEFT LANE-

NORTH CAROLINA PROFESSIONAL SEAL 28479 ENGINEER KEVIN G. BAILEY 5-30-13

DRAWN BY : CLG	DATE : 8-12	DESIGN ENGINEER OF RECORD: T. TOWNSEND	DATE : 5-13
CHECKED BY : TJT	DATE : 11-12		

STV / Ralph Whitehead Associates, Inc.
1000 West Morehead St., Ste. 200
Charlotte, NC 28208
NC License No. F-0991

REVISIONS						SHEET NO.
NO.	BY:	DATE:	NO.	BY:	DATE:	S-86
1			3			TOTAL SHEETS
2			4			83

5/30/2013 4:53:49 PM R:\ustation\Finals\Framing Plan_Span 1-2 Sheet 1 of 14.dgn

NOTES:

1. FOR THE LOCATION OF FORMED HOLES FOR THE INTERMEDIATE STEEL DIAPHRAGMS IN GIRDERS, SEE "PRESTRESSED CONCRETE MODIFIED BULB TEE GIRDER DIAPHRAGM DETAILS" SHEET.

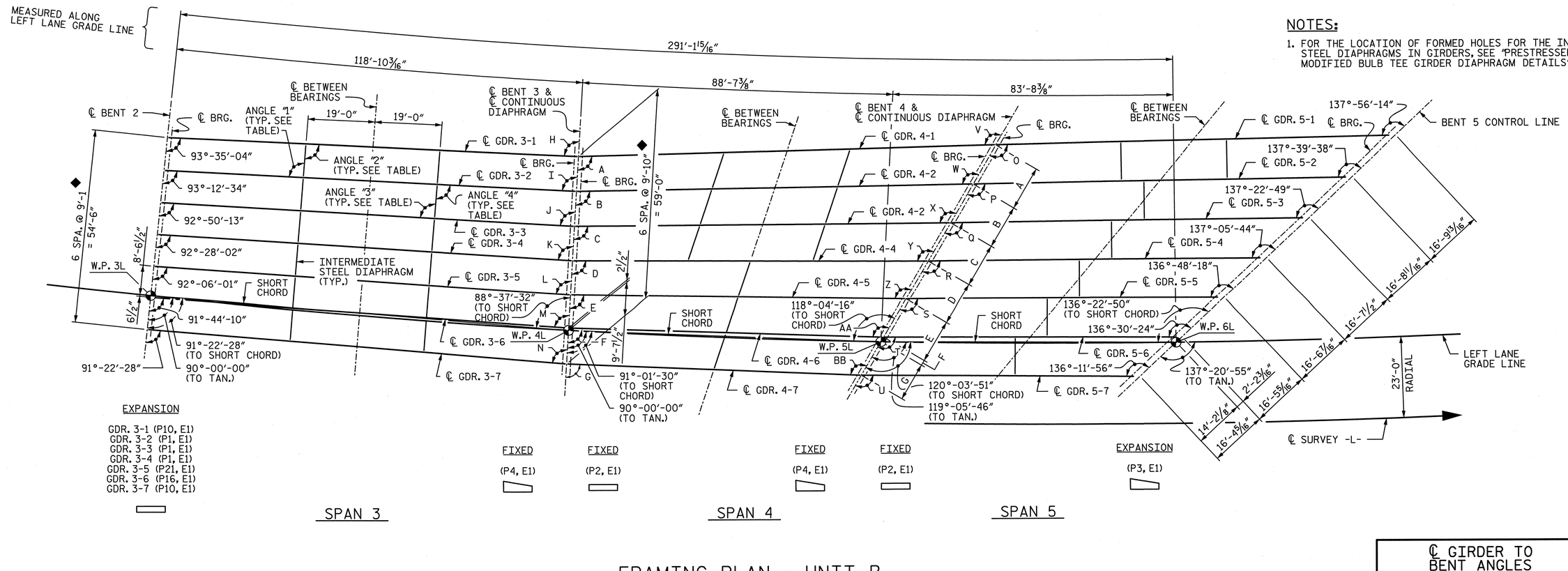

FRAMING PLAN - UNIT B

DISTANCES ALONG ℄ BENT	
A	12'-7 1/2"
B	12'-7 1/4"
C	12'-7 1/16"
D	12'-6 13/16"
E	12'-6 5/8"
F	1'-6 5/16"
G	11'-0 1/8"

DIAPHRAGM ANGLES

	DIAPHRAGM	ANGLE "1"	ANGLE "2"	ANGLE "3"	ANGLE "4"
SPAN 3	3-1 TO 3-2	94°-47'-39"	92°-10'-9"	91°-46'-01"	92°-08'-32"
	3-2 TO 3-3	91°-25'-18"	94°-47'-39"	91°-23'-40"	91°-46'-01"
	3-3 TO 3-4	91°-03'-07"	91°-25'-18"	91°-01'-29"	91°-23'-40"
	3-4 TO 3-5	90°-41'-06"	91°-03'-07"	90°-39'-28"	91°-01'-29"
	3-5 TO 3-6	90°-19'-15"	90°-41'-06"	90°-17'-37"	90°-39'-28"
	3-6 TO 3-7	89°-57'-33"	90°-19'-15"	89°-55'-56"	90°-17'-37"
SPAN 4	4-1 TO 4-2	104°-40'-58"	105°-09'-39"	113°-43'-35"	114°-12'-16"
	4-2 TO 4-3	104°-09'-40"	104°-40'-58"	113°-12'-17"	113°-43'-35"
	4-3 TO 4-4	103°-35'-18"	104°-09'-40"	112°-37'-55"	113°-12'-17"
	4-4 TO 4-5	107°-40'-14"	103°-35'-18"		
	4-5 TO 4-6	106°-57'-56"	107°-40'-14"		
	4-6 TO 4-7	106°-10'-26"	106°-57'-56"		
SPAN 5	5-1 TO 5-2	90°-00'-00"	90°-16'-37"	90°-00'-00"	90°-16'-37"
	5-2 TO 5-3	90°-00'-00"	90°-16'-49"		
	5-3 TO 5-4	90°-00'-00"	90°-17'-05"		
	5-4 TO 5-5	90°-00'-00"	90°-17'-26"		
	5-5 TO 5-6	90°-00'-00"	90°-17'-54"		
	5-6 TO 5-7	90°-00'-00"	90°-18'-28"		

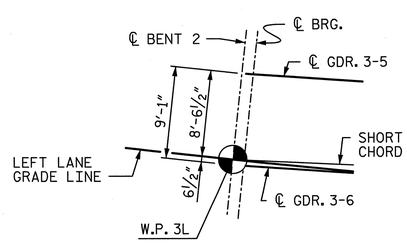

WORKPOINT 3L DETAIL

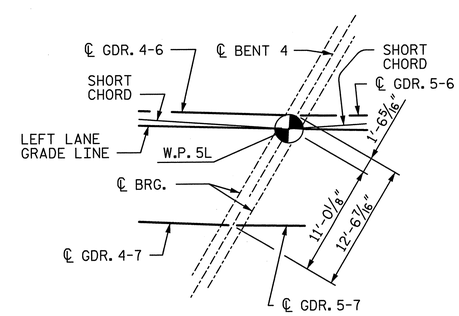

WORKPOINT 5L DETAIL

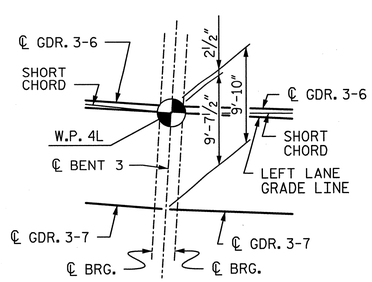

WORKPOINT 4L DETAIL

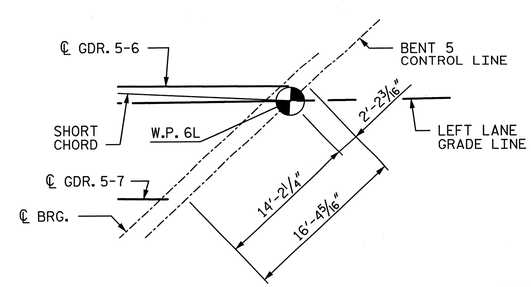

WORKPOINT 6L DETAIL

℄ GIRDER TO BENT ANGLES			
A	94°-39'-57"	O	121°-37'-15"
B	94°-11'-46"	P	121°-20'-38"
C	93°-39'-58"	Q	121°-03'-49"
D	93°-05'-36"	R	120°-46'-44"
E	92°-27'-36"	S	120°-29'-18"
F	91°-45'-18"	T	120°-11'-24"
G	90°-57'-48"	U	119°-52'-56"
H	90°-50'-08"	V	121°-42'-44"
I	90°-27'-37"	W	121°-14'-03"
J	90°-05'-16"	X	120°-42'-45"
K	89°-43'-05"	Y	120°-08'-23"
L	89°-21'-04"	Z	119°-30'-23"
M	88°-59'-13"	AA	118°-48'-04"
N	88°-37'-32"	BB	118°-00'-34"

PROJECT NO. U-2524C

GUILFORD COUNTY

STATION: POT 407+73.35 -L-
= POT 29+32.06 -Y4-

SHEET 2 OF 14

STATE OF NORTH CAROLINA
DEPARTMENT OF TRANSPORTATION
RALEIGH

FRAMING PLAN
UNIT B SPANS 3-5

-LEFT LANE-

NORTH CAROLINA PROFESSIONAL SEAL 28479 ENGINEER KEVIN G. BAILEY 5-30-13

STV / Ralph Whitehead Associates, Inc.
1000 West Morehead St. Ste. 200
Charlotte, NC 28208
NC License No. F-0991

REVISIONS						SHEET NO.
NO.	BY:	DATE:	NO.	BY:	DATE:	S-87
1			3			TOTAL SHEETS
2			4			836

DRAWN BY : CLG DATE : 8-12
CHECKED BY : TJT DATE : 11-12

DESIGN ENGINEER OF RECORD: T. TOWNSEND DATE : 5-13

5/30/2013 4:53:54 PM R:\ustation\Finals\Framing Plan_Span 3-5 Sheet 2 of 14.dgn

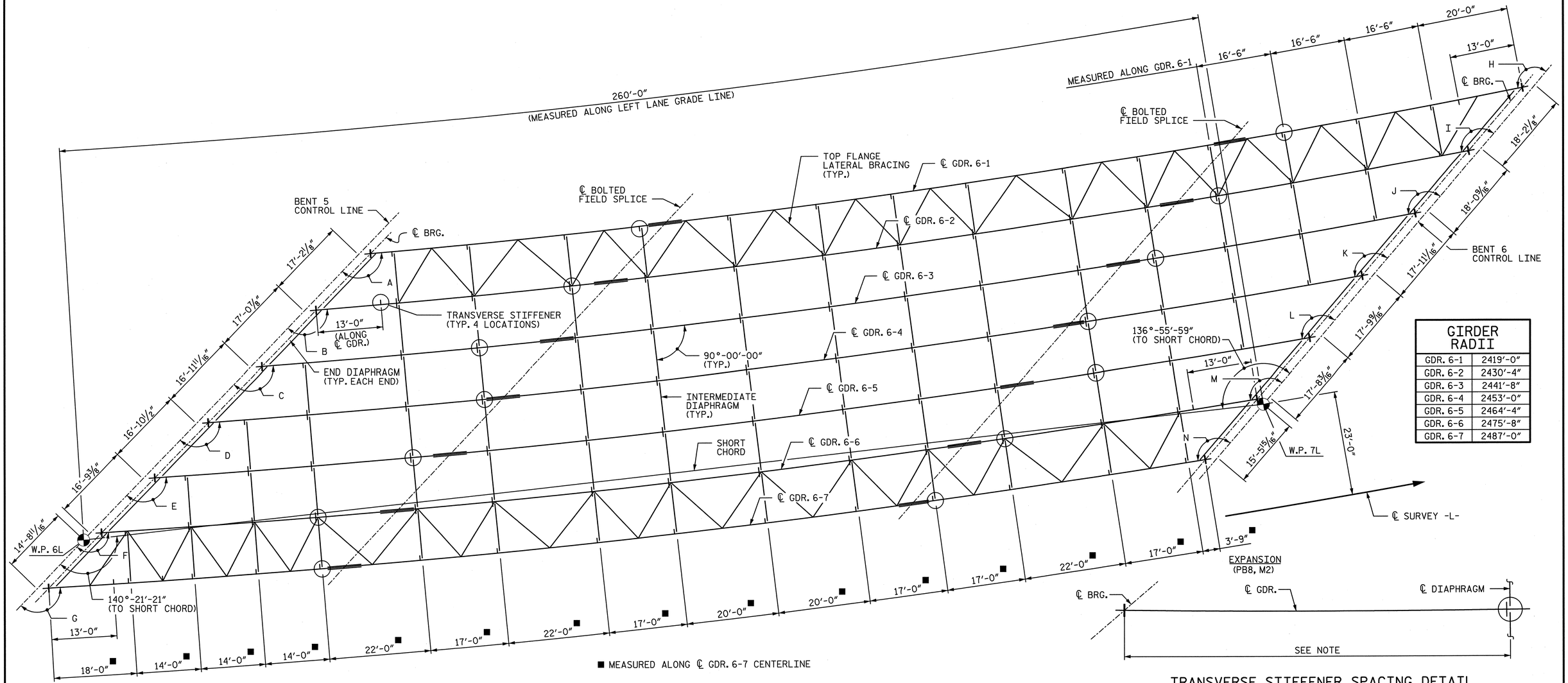

FRAMING PLAN - SPAN 6

GIRDER RADII	
GDR. 6-1	2419'-0"
GDR. 6-2	2430'-4"
GDR. 6-3	2441'-8"
GDR. 6-4	2453'-0"
GDR. 6-5	2464'-4"
GDR. 6-6	2475'-8"
GDR. 6-7	2487'-0"

℄ GIRDER TO BENT ANGLES●	
A	138°-51'-42"
B	138°-33'-25"
C	138°-15'-24"
D	137°-57'-39"
E	137°-40'-09"
F	137°-22'-56"
G	137°-05'-57"
H	141°-36'-10"
I	141°-16'-01"
J	140°-56'-11"
K	140°-36'-41"
L	140°-17'-30"
M	139°-58'-36"
N	139°-40'-01"

● ANGLES SHOWN ARE TANGENT TO GIRDER

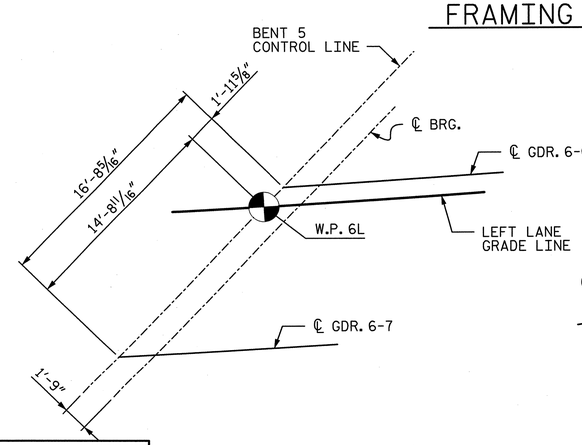

WORKPOINT 6L DETAIL

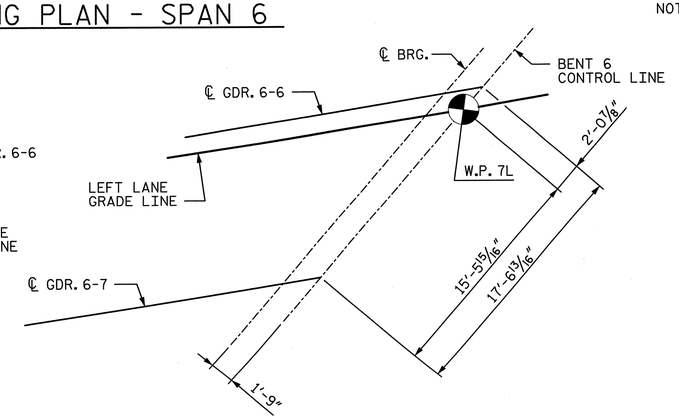

WORKPOINT 7L DETAIL

TRANSVERSE STIFFENER SPACING DETAIL

NOTE: ALL DIAPHRAGM CONNECTOR PLATES IN THIS REGION SHALL BE INSTALLED AS A COMBINATION CONNECTOR PLATE/TRANSVERSE STIFFENER. SEE TRANSVERSE STIFFENER DETAILS ON SHEETS TITLED "STRUCTURAL STEEL DETAILS". (TYP. EA. END OF GIRDER)

PROJECT NO. U-2524C

GUILFORD COUNTY

STATION: POT 407+73.35 -L-
= POT 29+32.06 -Y4-

SHEET 3 OF 14

NORTH CAROLINA PROFESSIONAL SEAL 28479 ENGINEER KEVIN G. BAILEY 5-30-13

STATE OF NORTH CAROLINA
DEPARTMENT OF TRANSPORTATION
RALEIGH

FRAMING PLAN
SPAN 6

-LEFT LANE-

DRAWN BY : VMW	DATE : 1-13	DESIGN ENGINEER OF RECORD: K. BAILEY	DATE : 5-13
CHECKED BY : TRL	DATE : 3-13		

STV / Ralph Whitehead Associates, Inc.
1000 West Morehead St., Ste. 200
Charlotte, NC 28208
NC License No. F-0991

REVISIONS								SHEET NO.
NO.	BY:	DATE:	NO.	BY:	DATE:			S-88
1			3					TOTAL SHEETS
2			4					836

5/30/2013 4:53:58 PM R:\ustation\Finals\Framing Plan_Span 6 Sheet 3 of 14.dgn

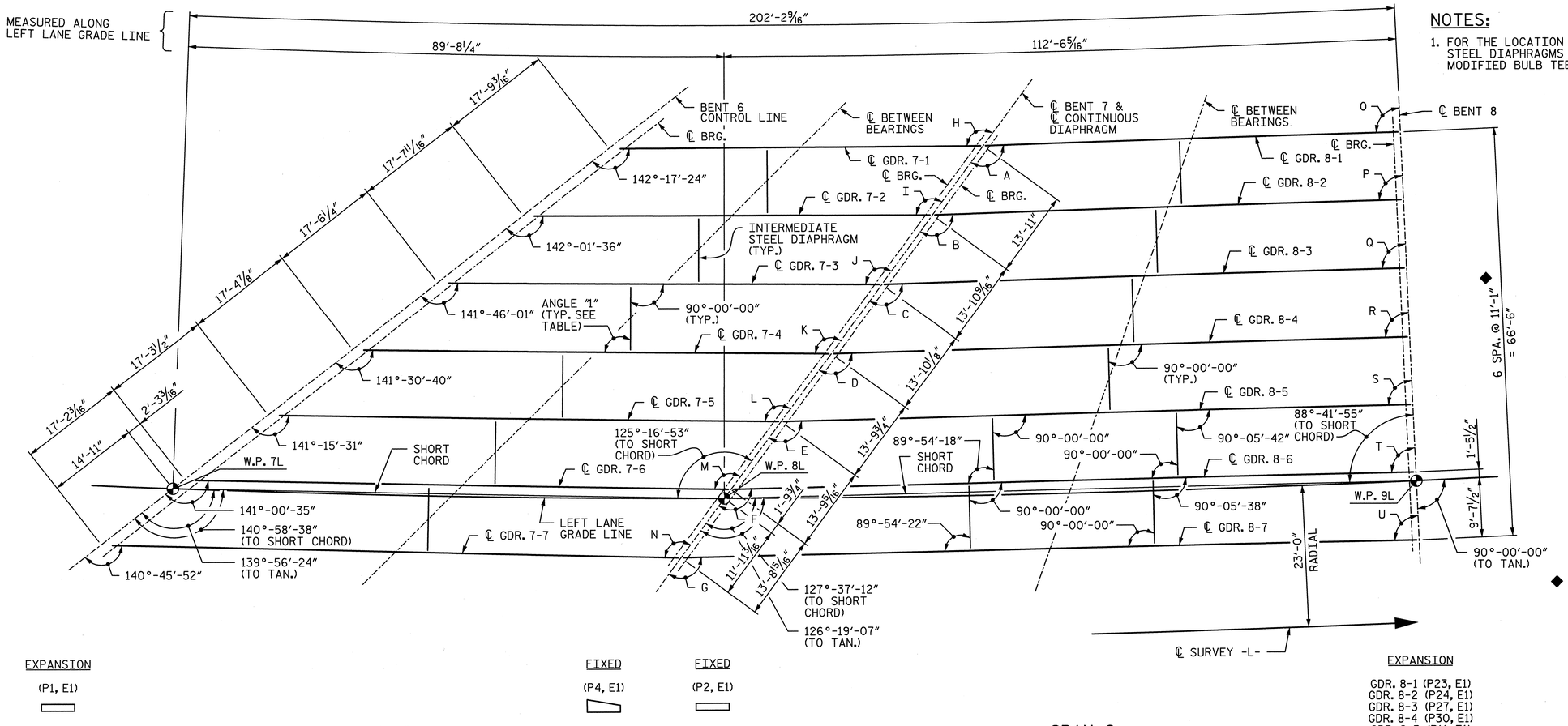

NOTES:

1. FOR THE LOCATION OF FORMED HOLES FOR THE INTERMEDIATE STEEL DIAPHRAGMS IN GIRDERS, SEE "PRESTRESSED CONCRETE MODIFIED BULB TEE GIRDER DIAPHRAGM DETAILS" SHEET.

◆ DIMENSIONS SHOWN ARE RADIAL TO CURVES CONCENTRIC WITH ℄ SURVEY -L-. GIRDERS ARE ON CHORDS OF THESE CONCENTRIC CURVES FOR THE SPAN.

EXPANSION

(P1, E1)

FIXED

(P4, E1)

FIXED

(P2, E1)

SPAN 7

EXPANSION

GDR. 8-1 (P23, E1)
GDR. 8-2 (P24, E1)
GDR. 8-3 (P27, E1)
GDR. 8-4 (P30, E1)
GDR. 8-5 (P11, E1)
GDR. 8-6 (P18, E1)
GDR. 8-7 (P22, E1)

SPAN 8

FRAMING PLAN - UNIT C

DIAPHRAGM ANGLES

	DIAPHRAGM	ANGLE "1"
SPAN 7	7-1 TO 7-2	89°-44'-12"
	7-2 TO 7-3	89°-44'-25"
	7-3 TO 7-4	89°-44'-39"
	7-4 TO 7-5	89°-44'-52"
	7-5 TO 7-6	89°-45'-04"
	7-6 TO 7-7	89°-45'-16"
SPAN 8	8-1 TO 8-2	89°-54'-02"
	8-2 TO 8-3	89°-54'-06"
	8-3 TO 8-4	89°-54'-10"
	8-4 TO 8-5	89°-54'-14"

℄ GIRDER TO BENT ANGLES

A	128°-07'-05"	O	89°-11'-48"
B	128°-01'-07"	P	89°-05'-50"
C	127°-55'-14"	Q	88°-59'-57"
D	127°-49'-24"	R	88°-54'-07"
E	127°-43'-38"	S	88°-48'-21"
F	127°-37'-57"	T	88°-42'-40"
G	127°-32'-19"	U	88°-37'-02"
H	126°-35'-38"		
I	126°-19'-50"		
J	126°-04'-15"		
K	125°-48'-54"		
L	125°-33'-46"		
M	125°-18'-50"		
N	125°-04'-06"		

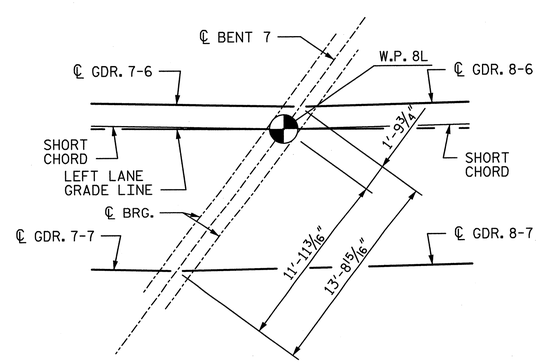

WORKPOINT 8L DETAIL

PROJECT NO. U-2524C

GUILFORD COUNTY

STATION: POT 407+73.35 -L-
= POT 29+32.06 -Y4-

SHEET 4 OF 14

STATE OF NORTH CAROLINA
DEPARTMENT OF TRANSPORTATION
RALEIGH

FRAMING PLAN
UNIT C SPANS 7 & 8

-LEFT LANE-

NORTH CAROLINA PROFESSIONAL SEAL 28479 ENGINEER KEVIN G. BAILEY
5-30-13

STV / Ralph Whitehead Associates, Inc.
1000 West Morehead St. Ste. 200
Charlotte, NC 28208
NC License No. F-0991

REVISIONS						SHEET NO.
NO.	BY:	DATE:	NO.	BY:	DATE:	S-89
1			3			TOTAL SHEETS
2			4			836

DRAWN BY : CLG DATE : 8-12
CHECKED BY : TJT DATE : 11-12

DESIGN ENGINEER OF RECORD: T. TOWNSEND DATE : 5-13

5/30/2013 4:54:02 PM R:\ustation\Finals\Framing Plan_Span 7-8 Sheet 4 of 14.dgn

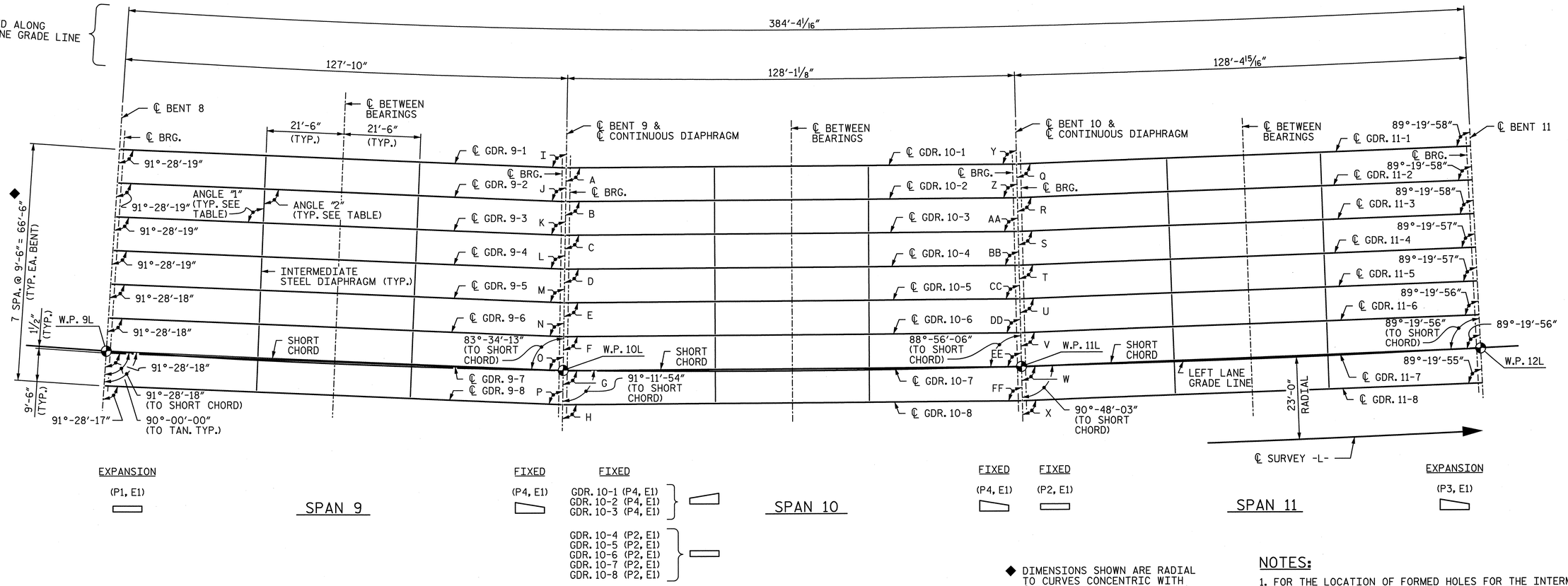

FRAMING PLAN - UNIT D

◆ DIMENSIONS SHOWN ARE RADIAL TO CURVES CONCENTRIC WITH ℄ SURVEY -L-. GIRDERS ARE ON CHORDS OF THESE CONCENTRIC CURVES FOR THE SPAN.

NOTES:

1. FOR THE LOCATION OF FORMED HOLES FOR THE INTERMEDIATE STEEL DIAPHRAGMS IN GIRDERS, SEE "PRESTRESSED CONCRETE MODIFIED BULB TEE GIRDER DIAPHRAGM DETAILS" SHEET.

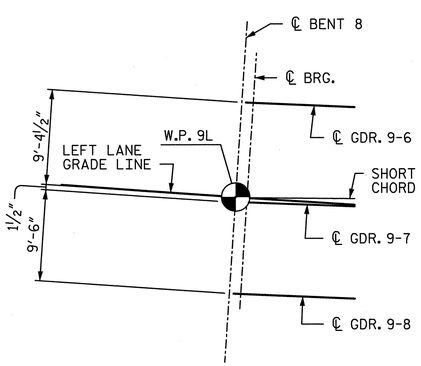

WORKPOINT 9L DETAIL

DIAPHRAGM ANGLES

	DIAPHRAGM	ANGLE "1"	ANGLE "2"
SPAN 9	9-1 TO 9-2	90°-01'-08"	90°-01'-09"
	9-2 TO 9-3	90°-01'-08"	90°-01'-08"
	9-3 TO 9-4	90°-01'-08"	90°-01'-08"
	9-4 TO 9-5	90°-01'-08"	90°-01'-08"
	9-5 TO 9-6	90°-01'-07"	90°-01'-08"
	9-6 TO 9-7	90°-01'-07"	90°-01'-07"
	9-7 TO 9-8	90°-01'-07"	90°-01'-07"
SPAN 10	10-1 TO 10-2	90°-04'-05"	90°-04'-05"
	10-2 TO 10-3	90°-04'-04"	90°-04'-05"
	10-3 TO 10-4	90°-04'-03"	90°-04'-04"
	10-4 TO 10-5	90°-04'-03"	90°-04'-03"
	10-5 TO 10-6	90°-04'-02"	90°-04'-03"
	10-6 TO 10-7	90°-04'-01"	90°-04'-02"
	10-7 TO 10-8	90°-04'-00"	90°-04'-01"
SPAN 11	11-1 TO 11-2	90°-04'-02"	90°-04'-03"
	11-2 TO 11-3	90°-04'-02"	90°-04'-02"
	11-3 TO 11-4	90°-04'-01"	90°-04'-02"
	11-4 TO 11-5	90°-04'-01"	90°-04'-01"
	11-5 TO 11-6	90°-04'-00"	90°-04'-01"
	11-6 TO 11-7	90°-04'-00"	90°-04'-00"
	11-7 TO 11-8	90°-03'-59"	90°-04'-00"

℄ GIRDER TO BENT ANGLES

A	91°-11'-60"	Q	90°-48'-07"
B	91°-11'-59"	R	90°-48'-06"
C	91°-11'-58"	S	90°-48'-06"
D	91°-11'-57"	T	90°-48'-05"
E	91°-11'-57"	U	90°-48'-05"
F	91°-11'-56"	V	90°-48'-04"
G	91°-11'-55"	W	90°-48'-04"
H	91°-11'-55"	X	90°-48'-03"
I	88°-34'-16"	Y	88°-56'-11"
J	88°-34'-16"	Z	88°-56'-11"
K	88°-34'-15"	AA	88°-56'-10"
L	88°-34'-15"	BB	88°-56'-09"
M	88°-59'-15"	CC	88°-56'-08"
N	88°-37'-14"	DD	88°-56'-08"
O	88°-34'-14"	EE	88°-56'-07"
P	88°-34'-14"	FF	88°-56'-06"

PROJECT NO. U-2524C
GUILFORD COUNTY
STATION: POT 407+73.35 -L-
= POT 29+32.06 -Y4-
SHEET 5 OF 14

NORTH CAROLINA PROFESSIONAL SEAL 28479 ENGINEER KEVIN G. BAILEY 5-30-13

STATE OF NORTH CAROLINA
DEPARTMENT OF TRANSPORTATION
RALEIGH

FRAMING PLAN
UNIT D SPANS 9-11

-LEFT LANE-

STV/ Ralph Whitehead Associates, Inc.
1000 West Morehead St., Ste. 200
Charlotte, NC 28208
NC License No. F-0991

REVISIONS							SHEET NO.
NO.	BY:	DATE:	NO.	BY:	DATE:		S-90
1			3				TOTAL SHEETS
2			4				836

DRAWN BY : CLG DATE : 8-12
CHECKED BY : TJT DATE : 11-12
DESIGN ENGINEER OF RECORD: T. TOWNSEND DATE : 5-13

5/30/2013 4:54:06 PM R:\Ustation\Finals\Framing Plan_Span 9-11Sheet 5 of 14.dgn

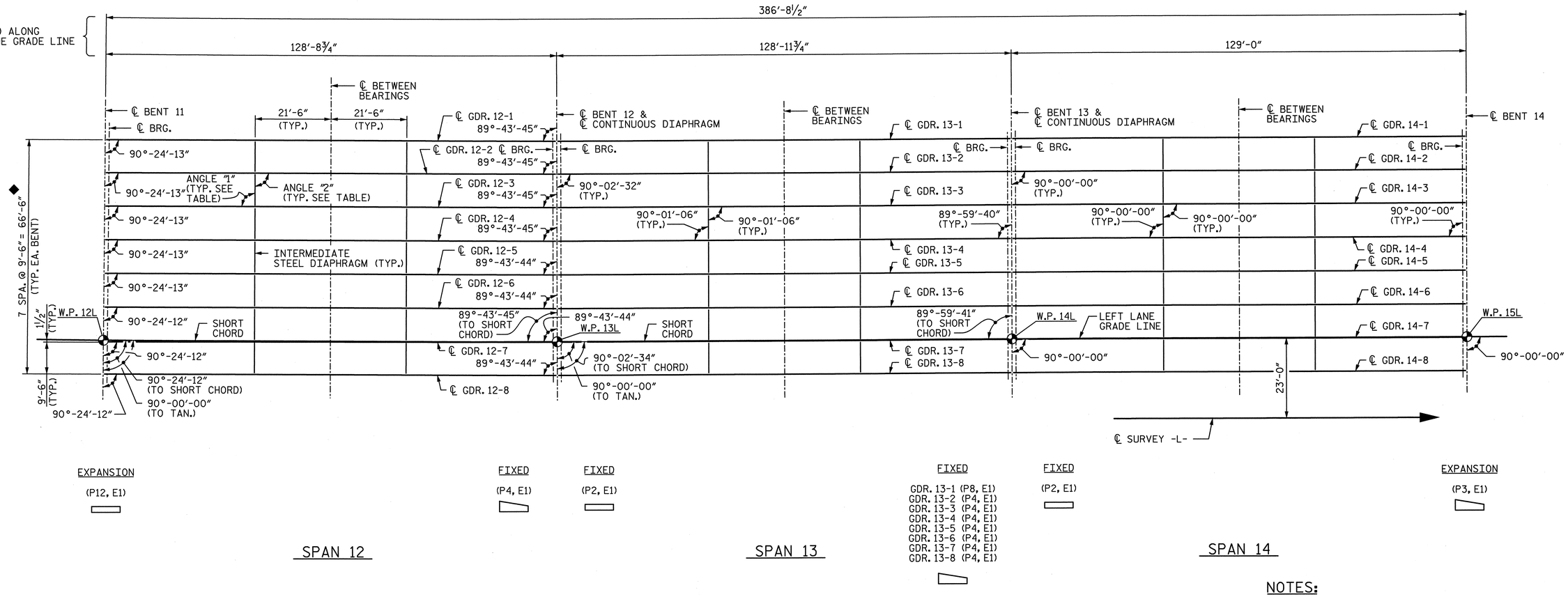

EXPANSION
(P12, E1)

FIXED
(P4, E1)

FIXED
(P2, E1)

FIXED
GDR. 13-1 (P8, E1)
GDR. 13-2 (P4, E1)
GDR. 13-3 (P4, E1)
GDR. 13-4 (P4, E1)
GDR. 13-5 (P4, E1)
GDR. 13-6 (P4, E1)
GDR. 13-7 (P4, E1)
GDR. 13-8 (P4, E1)

FIXED
(P2, E1)

EXPANSION
(P3, E1)

SPAN 12

SPAN 13

SPAN 14

FRAMING PLAN - UNIT E

◆ (FOR SPANS 12 & 13 ONLY) DIMENSIONS SHOWN ARE RADIAL TO CURVES CONCENTRIC WITH ℄ SURVEY -L-. GIRDERS ARE ON CHORDS OF THESE CONCENTRIC CURVES FOR THE SPAN.

NOTES:

1. FOR THE LOCATION OF FORMED HOLES FOR THE INTERMEDIATE STEEL DIAPHRAGMS IN GIRDERS, SEE "PRESTRESSED CONCRETE MODIFIED BULB TEE GIRDER DIAPHRAGM DETAILS" SHEET.

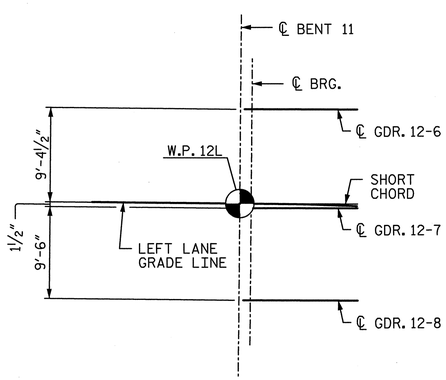

WORKPOINT 12L DETAIL

DIAPHRAGM ANGLES		
DIAPHRAGM	ANGLE "1"	ANGLE "2"
12-1 TO 12-2	90°-03'-59"	90°-03'-59"
12-2 TO 12-3	90°-03'-59"	90°-03'-59"
12-3 TO 12-4	90°-03'-59"	90°-03'-59"
12-4 TO 12-5	90°-03'-58"	90°-03'-59"
12-5 TO 12-6	90°-03'-58"	90°-03'-58"
12-6 TO 12-7	90°-03'-58"	90°-03'-58"
12-7 TO 12-8	90°-03'-58"	90°-03'-58"

PROJECT NO. U-2524C
GUILFORD COUNTY
STATION: POT 407+73.35 -L-
= POT 29+32.06 -Y4-
SHEET 6 OF 14

NORTH CAROLINA PROFESSIONAL SEAL 28479 ENGINEER KEVIN G. BAILEY
5-30-13

STATE OF NORTH CAROLINA
DEPARTMENT OF TRANSPORTATION
RALEIGH

FRAMING PLAN
UNIT E SPANS 12-14

-LEFT LANE-

STV / Ralph Whitehead Associates, Inc.
1000 West Morehead St., Ste. 200
Charlotte, NC 28208
NC License No. F-0991

REVISIONS						SHEET NO.
NO.	BY:	DATE:	NO.	BY:	DATE:	S-91
1			3			TOTAL SHEETS
2			4			836

DRAWN BY : CLG DATE : 8-12
CHECKED BY : TJT DATE : 11-12
DESIGN ENGINEER OF RECORD: T. TOWNSEND DATE : 5-13

5/30/2013 4:54:11 PM R:\ustation\Finals\Framing Plan_Span 12-14 Sheet 6 of 14.dgn

NOTES:

1. FOR THE LOCATION OF FORMED HOLES FOR THE INTERMEDIATE STEEL DIAPHRAGMS IN GIRDERS, SEE "PRESTRESSED CONCRETE MODIFIED BULB TEE GIRDER DIAPHRAGM DETAILS" SHEET.

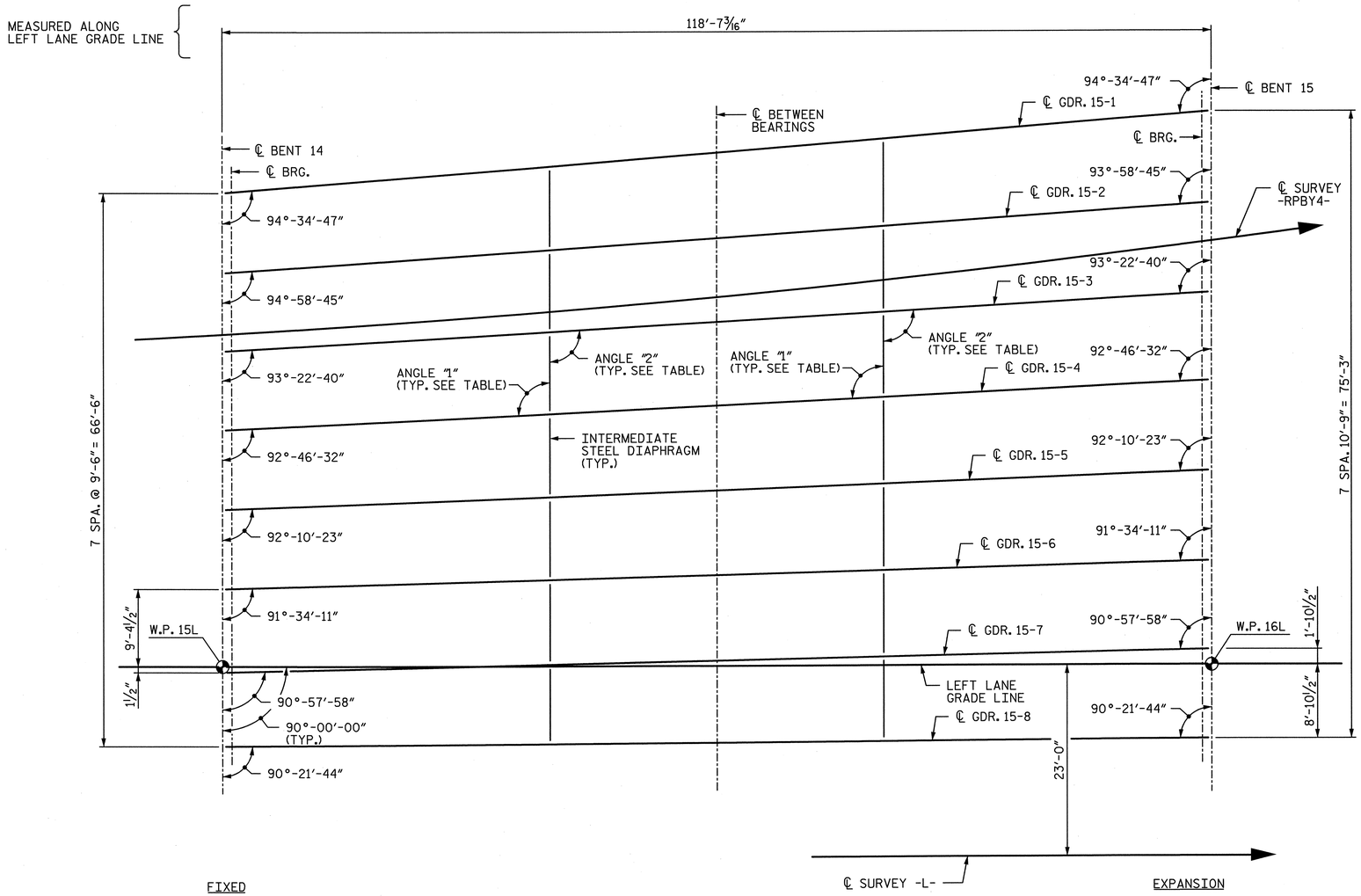

FIXED

(P2, E1)

EXPANSION

GDR. 15-1 (P5, E1)
GDR. 15-2 (P19, E1)
GDR. 15-3 (P7, E1)
GDR. 15-4 (P28, E1)
GDR. 15-5 (P3, E1)
GDR. 15-6 (P3, E1)
GDR. 15-7 (P3, E1)
GDR. 15-8 (P3, E1)

DIAPHRAGM ANGLES

DIAPHRAGM	ANGLE "1"	ANGLE "2"
15-1 TO 15-2	93°-58'-45"	94°-34'-47"
15-2 TO 15-3	93°-22'-40"	93°-58'-45"
15-3 TO 15-4	92°-46'-32"	93°-22'-40"
15-4 TO 15-5	92°-10'-23"	92°-46'-32"
15-5 TO 15-6	91°-34'-11"	92°-10'-23"
15-6 TO 15-7	90°-57'-58"	91°-34'-11"
15-7 TO 15-8	90°-21'-44"	90°-57'-58"

FRAMING PLAN - SPAN 15

PROJECT NO. U-2524C
GUILFORD COUNTY
STATION: POT 407+73.35 -L-
= POT 29+32.06 -Y4-
SHEET 7 OF 14

STATE OF NORTH CAROLINA
DEPARTMENT OF TRANSPORTATION
RALEIGH

FRAMING PLAN
SPAN 15

-LEFT LANE-

NORTH CAROLINA PROFESSIONAL SEAL 28479 ENGINEER KEVIN G. BAILEY 5-30-13

STV/ Ralph Whitehead Associates, Inc.
1000 West Morehead St., Ste. 200
Charlotte, NC 28208
NC License No. F-0991

REVISIONS								SHEET NO.
NO.	BY:	DATE:	NO.	BY:	DATE:			S-92
1			3					TOTAL SHEETS
2			4					836

DRAWN BY : CLG DATE : 8-12
CHECKED BY : TJT DATE : 11-12

DESIGN ENGINEER OF RECORD: T. TOWNSEND DATE : 5-13

5/30/2013 4:54:15 PM R:\Ustation\Finals\Framing Plan_Span 15 Sheet 7 of 14.dgn

NOTES:

1. FOR THE LOCATION OF FORMED HOLES FOR THE INTERMEDIATE STEEL DIAPHRAGMS IN GIRDERS, SEE "PRESTRESSED CONCRETE MODIFIED BULB TEE GIRDER DIAPHRAGM DETAILS" SHEET.

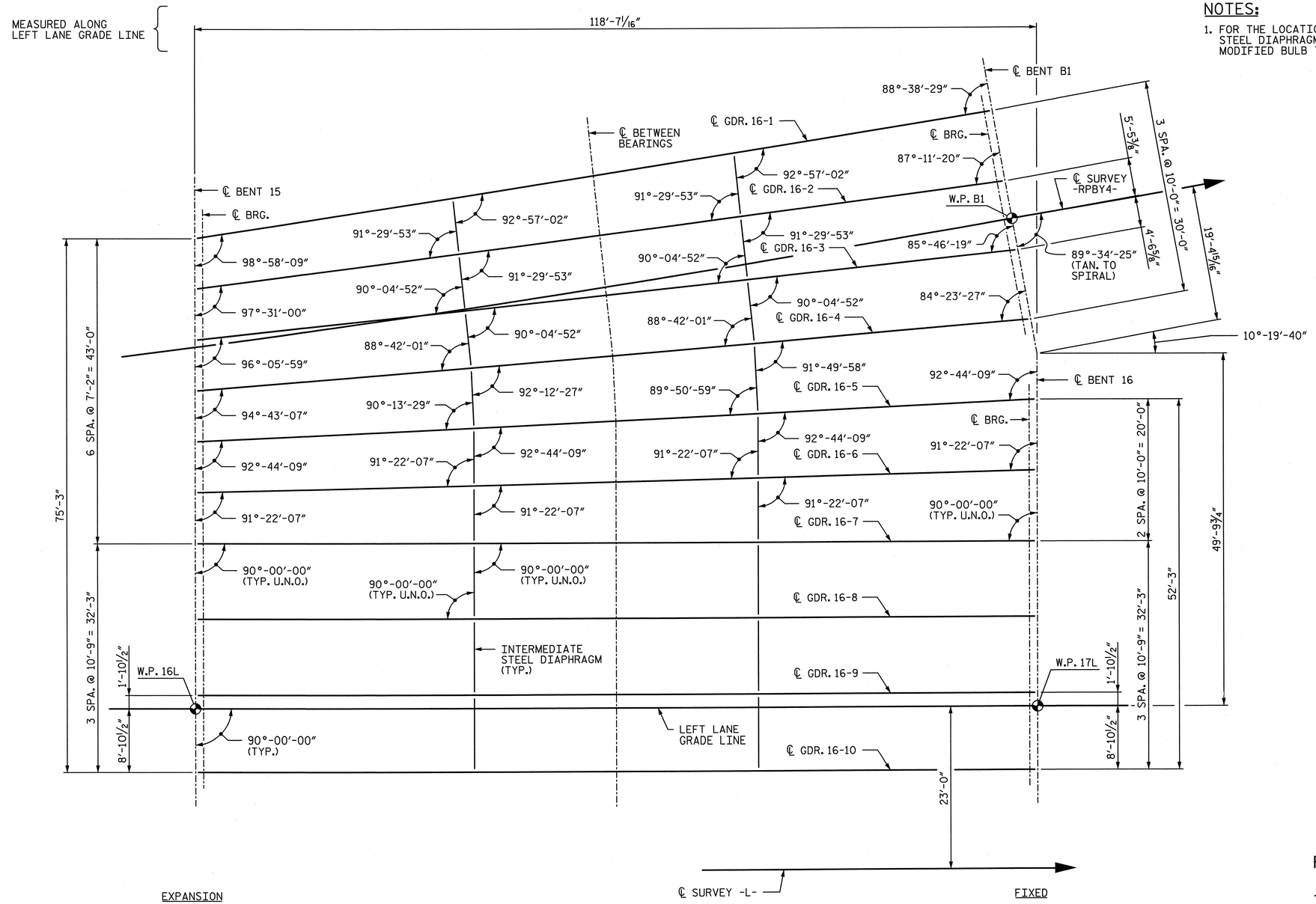

EXPANSION

GDR. 16-2 (P3, E1)
GDR. 16-3 (P26, E1)
GDR. 16-4 (P3, E1)

GDR. 16-1 (P1, E1)
GDR. 16-5 (P10, E1)
GDR. 16-6 (P25, E1)
GDR. 16-7 (P1, E1)
GDR. 16-8 (P1, E1)
GDR. 16-9 (P1, E1)
GDR. 16-10 (P1, E1)

FIXED

GDR. 16-1, BENT B1 (P13, E1)
GDR. 16-2, BENT B1 (P13, E1)
GDR. 16-3, BENT B1 (P15, E1)
GDR. 16-4, BENT B1 (P20, E1)

GDR. 16-5, BENT 16 (P4, E1)
GDR. 16-6, BENT 16 (P4, E1)
GDR. 16-7, BENT 16 (P4, E1)
GDR. 16-8, BENT 16 (P4, E1)
GDR. 16-9, BENT 16 (P4, E1)
GDR. 16-10, BENT 16 (P4, E1)

FRAMING PLAN - SPAN 16

NORTH CAROLINA PROFESSIONAL SEAL 28479 ENGINEER KEVIN G. BAILEY 5-30-13

PROJECT NO. U-2524C
GUILFORD COUNTY
STATION: POT 407+73.35 -L-
= POT 29+32.06 -Y4-

SHEET 8 OF 14

STATE OF NORTH CAROLINA
DEPARTMENT OF TRANSPORTATION
RALEIGH

FRAMING PLAN
SPAN 16

-LEFT LANE-

REVISIONS						SHEET NO.
NO.	BY:	DATE:	NO.	BY:	DATE:	S-93
1			3			TOTAL SHEETS
2			4			836

STV / Ralph Whitehead Associates, Inc.
1000 West Morehead St., Ste. 200
Charlotte, NC 28208
NC License No. F-0991

DRAWN BY : CLG DATE : 8-12
CHECKED BY : TJT DATE : 11-12
DESIGN ENGINEER OF RECORD: T. TOWNSEND DATE : 5-13

5/30/2013 4:54:20 PM R:\ustation\Finals\Framing Plan_Span 16 Sheet 8 of 14.dgn

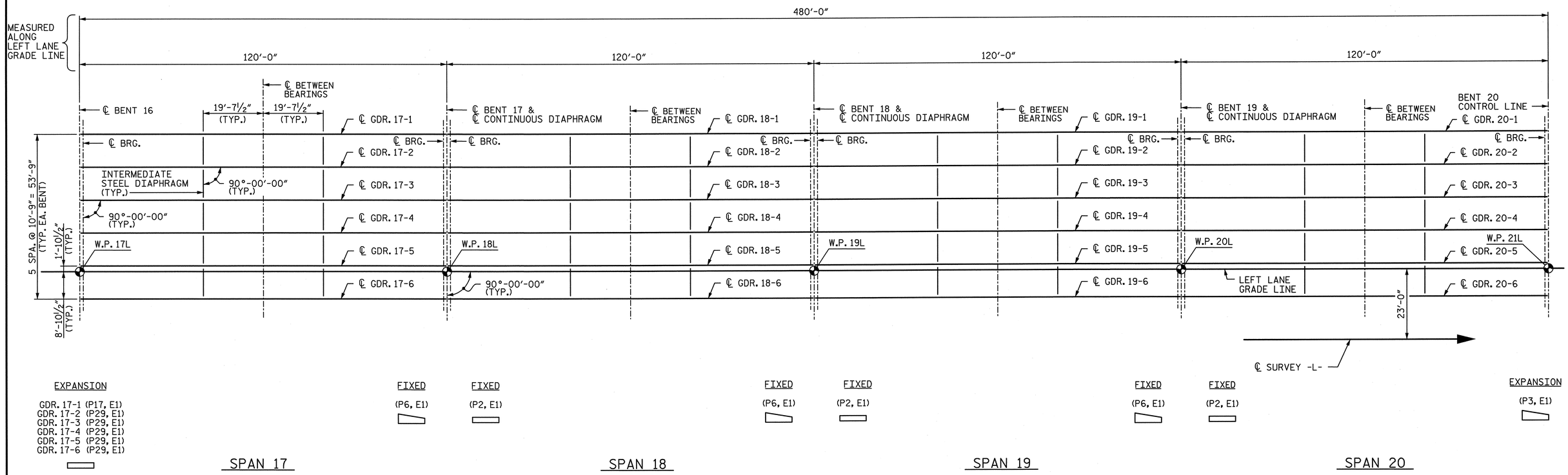

FRAMING PLAN - UNIT F

NOTES:

1. FOR THE LOCATION OF FORMED HOLES FOR THE INTERMEDIATE STEEL DIAPHRAGMS IN GIRDERS, SEE "PRESTRESSED CONCRETE MODIFIED BULB TEE GIRDER DIAPHRAGM DETAILS" SHEET.

PROJECT NO. U-2524C
GUILFORD COUNTY
STATION: POT 407+73.35 -L-
= POT 29+32.06 -Y4-
SHEET 9 OF 14

NORTH CAROLINA PROFESSIONAL SEAL 28479 ENGINEER KEVIN G. BAILEY
5-30-13

STATE OF NORTH CAROLINA
DEPARTMENT OF TRANSPORTATION
RALEIGH

FRAMING PLAN
UNIT F SPANS 17 - 20

-LEFT LANE-

STV / Ralph Whitehead Associates, Inc.
1000 West Morehead St., Ste. 200
Charlotte, NC 28208
NC License No. F-0991

REVISIONS						
NO.	BY:	DATE:	NO.	BY:	DATE:	
1			3			
2			4			

SHEET NO. S-94
TOTAL SHEETS 836

DRAWN BY : LEM DATE : 8-12
CHECKED BY : TJT DATE : 11-12
DESIGN ENGINEER OF RECORD: T. TOWNSEND DATE : 5-13

5/30/2013 4:54:24 PM R:\ustation\Finals\Framing Plan_Span 17-20 Sheet 9 of 14.dgn

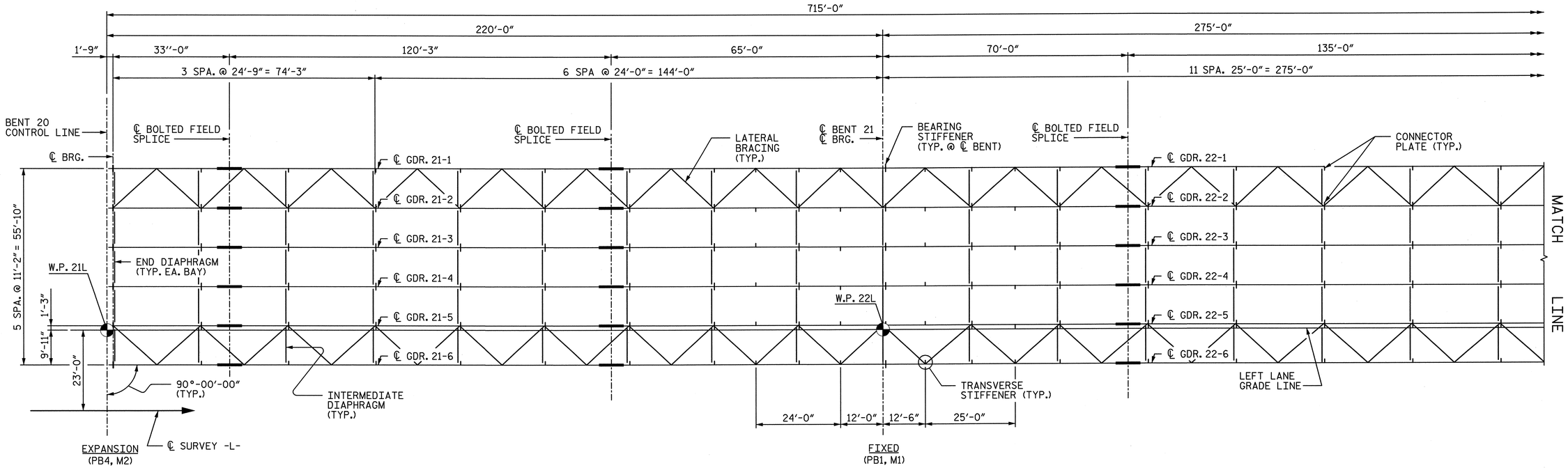

FRAMING PLAN - UNIT G

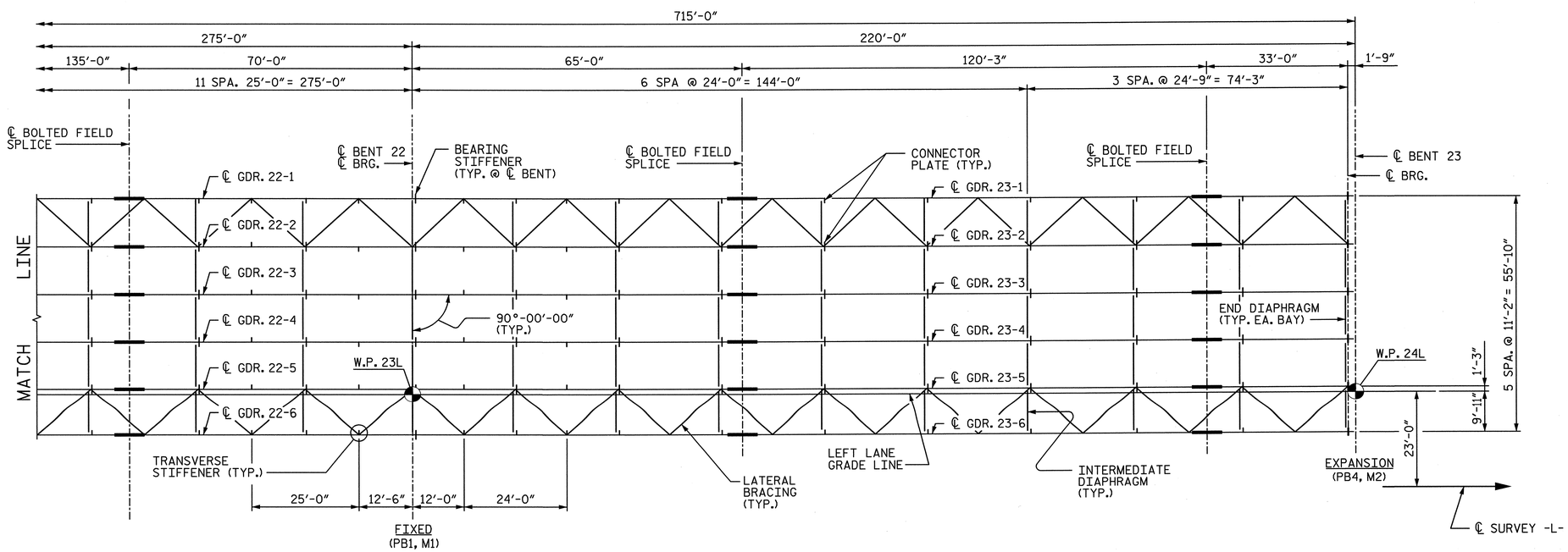

FRAMING PLAN - UNIT G

NORTH CAROLINA PROFESSIONAL SEAL 28479 ENGINEER KEVIN G. BAILEY 6-7-13

PROJECT NO. U-2524C

GUILFORD COUNTY

STATION: POT 407+73.35 -L-
= POT 29+32.06 -Y4-

SHEET 10 OF 14

STATE OF NORTH CAROLINA
DEPARTMENT OF TRANSPORTATION
RALEIGH

FRAMING PLAN
UNIT G SPANS 21-23

-LEFT LANE-

REVISIONS						SHEET NO.
NO.	BY:	DATE:	NO.	BY:	DATE:	S-95
1			3			TOTAL SHEETS
2			4			236

STV / Ralph Whitehead Associates, Inc.
1000 West Morehead St., Ste. 200
Charlotte, NC 28208
NC License No. F-0991

DRAWN BY : KP DATE : 11-12
CHECKED BY : GK DATE : 11-12

DESIGN ENGINEER OF RECORD: K. BAILEY DATE : 5-13

6/7/2013 10:33:41 AM R:\ustation\Finals\Framing Plan_Span 21-23 Sheet 10 of 14.dgn

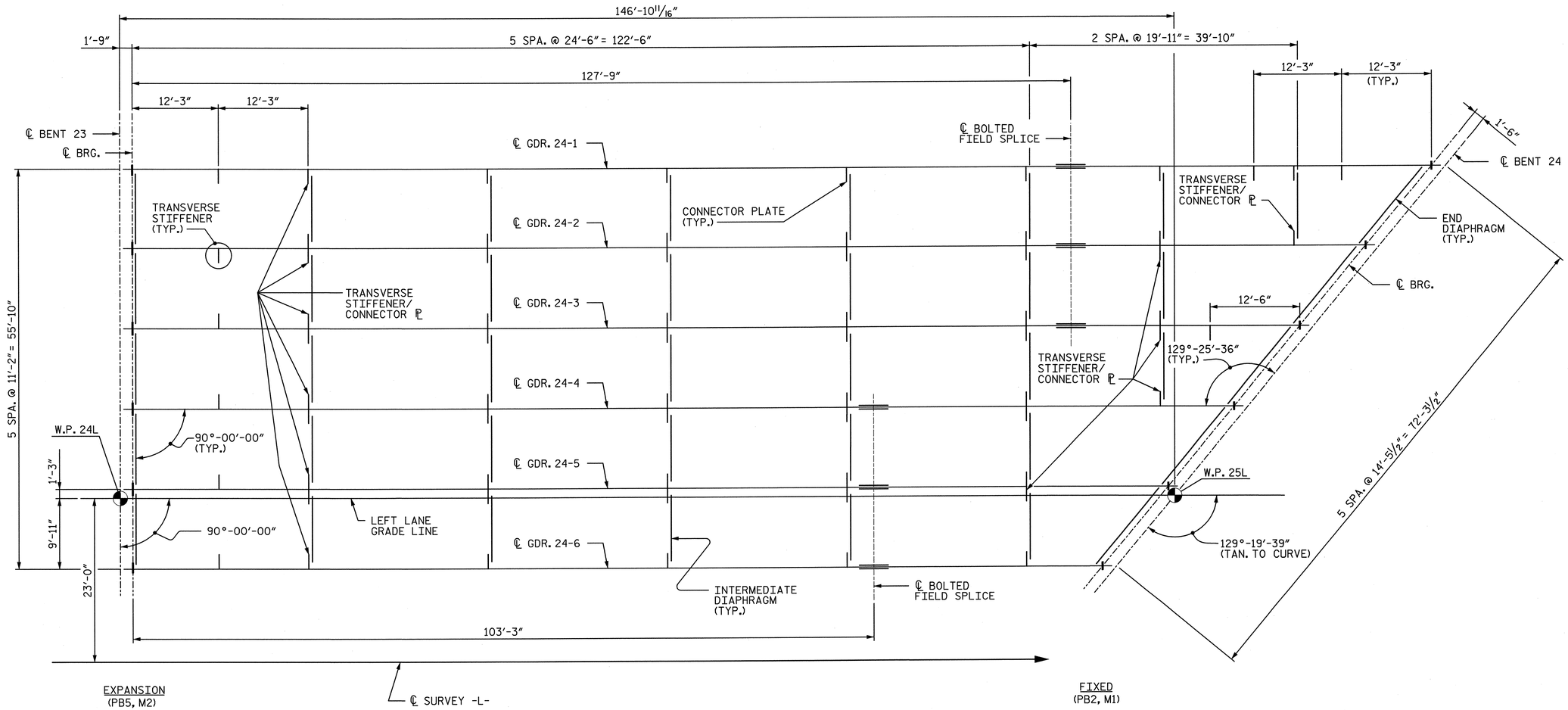

FRAMING PLAN - SPAN 24

NOTES:

1. ALL LOCATIONS NOTED AS A TRANSVERSE STIFFENER/CONNECTOR PLATE SHALL BE OF SUFFICIENT WIDTH TO BE USED AS A CONNECTOR PLATE WITH A MINIMUM OF 8". THE PLATE SHALL BE INSTALLED PER THE CONNECTOR PLATE DETAIL SHOWN ON "STRUCTURAL STEEL DETAILS".

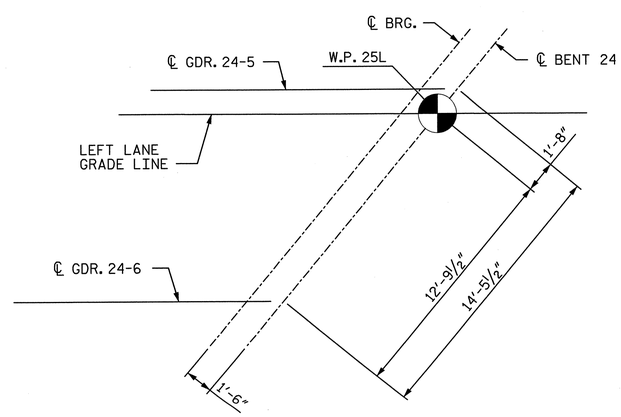

WORKPOINT 25L DETAIL

PROJECT NO. U-2524C

GUILFORD COUNTY

STATION: POT 407+73.35 -L-
= POT 29+32.06 -Y4-

SHEET 11 OF 14

STATE OF NORTH CAROLINA
DEPARTMENT OF TRANSPORTATION
RALEIGH

FRAMING PLAN
SPAN 24

-LEFT LANE-

NORTH CAROLINA PROFESSIONAL SEAL 28479 ENGINEER KEVIN G. BAILEY
5-30-13

STV/ Ralph Whitehead Associates, Inc.
1000 West Morehead St., Ste. 200
Charlotte, NC 28208
NC License No. F-0991

REVISIONS						
NO.	BY:	DATE:	NO.	BY:	DATE:	
1			3			
2			4			

SHEET NO. S-96

TOTAL SHEETS 836

DRAWN BY : KP DATE : 11-12
CHECKED BY : GK DATE : 11-12

DESIGN ENGINEER OF RECORD: K. BAILEY DATE : 5-13

5/30/2013 4:54:33 PM R:\ustation\Finals\Framing Plan_Span 24 Sheet 11of 14.dgn

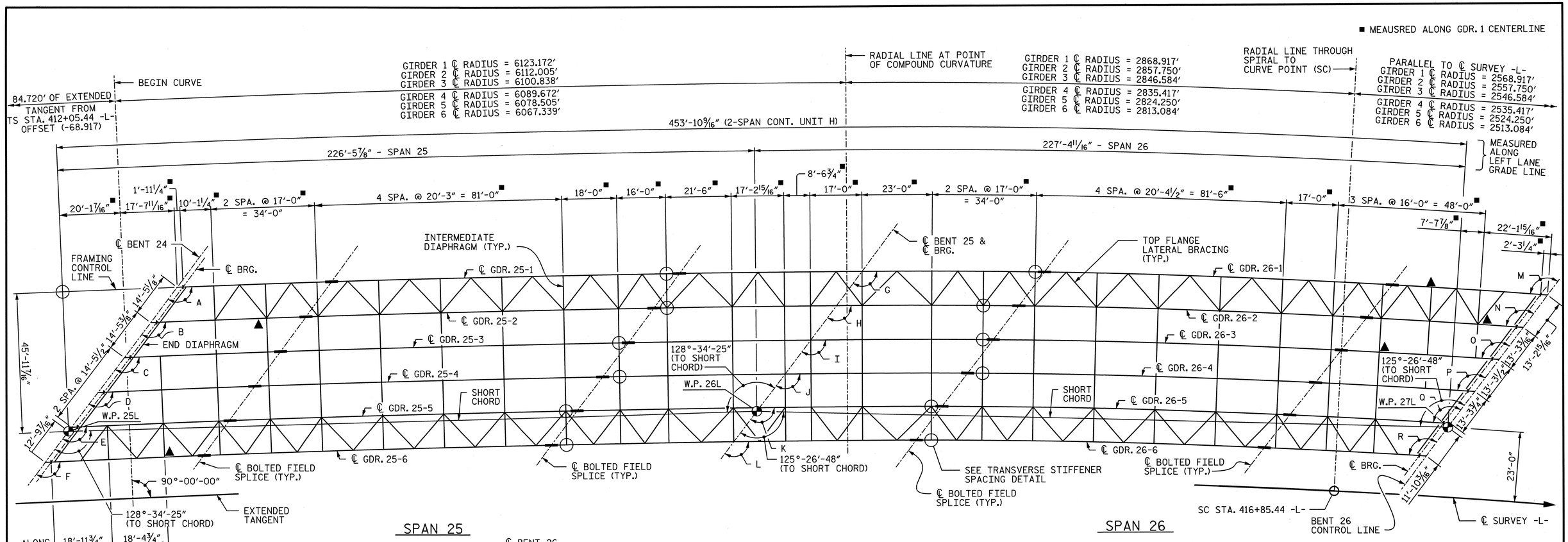

FRAMING PLAN - UNIT H

NOTE: GIRDER CENTERLINES ARE PARALLEL TO GIRDER 1. GIRDERS 4-6 ARE STRAIGHT AND PARALLEL TO GIRDER 1 FROM CENTERLINE BENT 24 TO THE BEGIN CURVE POINT SHOWN IN THE PLAN VIEW.

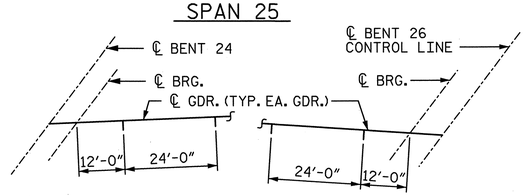

TRANSVERSE STIFFENER DETAIL

(STIFFENER REQUIRED EACH END OF UNIT, TYP. EA. GDR.)
(ALTERNATE SIDE OF WEB STIFFENER IS PLACED ON ADJACENT GDRS.)
(STIFFENERS SHALL NOT BE PLACED ON OUTSIDE OF EXT. GDRS.)
▲ AT THIS LOCATION ONLY, USE A COMBINATION CONNECTOR PLATE/TRANSVERSE STIFFENER)

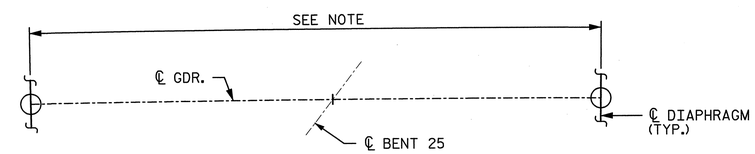

TRANSVERSE STIFFENER SPACING DETAIL

NOTE: ALL DIAPHRAGM CONNECTOR PLATES IN THIS REGION SHALL BE INSTALLED AS A COMBINATION CONNECTOR PLATE/TRANSVERSE STIFFENER EXCEPT AT ℄ BRG. A COMBINATION CONNECTOR PLATE/BEARING STIFFENER SHALL BE INSTALLED ℄ BEARING. SEE BEARING STIFFENER DETAIL AND TRANSVERSE STIFFENER DETAILS ON SHEET TITLED "STRUCTURAL STEEL DETAILS".

℄ GIRDER TO BENT ANGLES●	
A	129°-15'-44"
B	129°-20'-21"
C	129°-25'-38"
D	129°-25'-37"
E	129°-25'-37"
F	129°-25'-37"
G	127°-06'-01"
H	127°-13'-58"
I	127°-18'-46"
J	127°-23'-34"
K	127°-28'-23"
L	127°-33'-15"
M	122°-26'-11"
N	122°-35'-44"
O	122°-45'-22"
P	122°-55'-07"
Q	123°-04'-59"
R	123°-14'-56"

● ANGLES SHOWN ARE TANGENT TO GIRDER OR CURVE

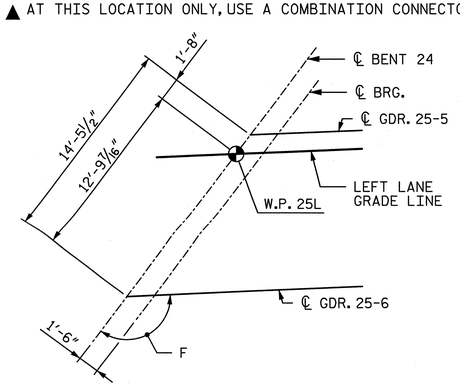

WORKPOINT 25L DETAIL

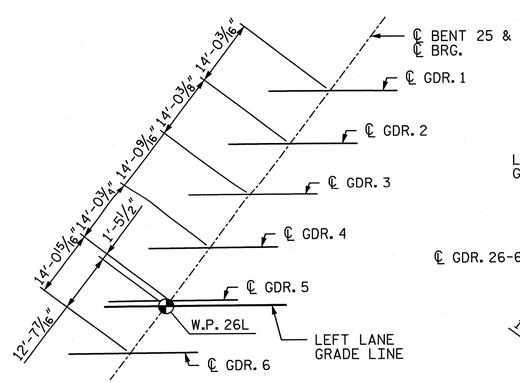

WORKPOINT 26L DETAIL

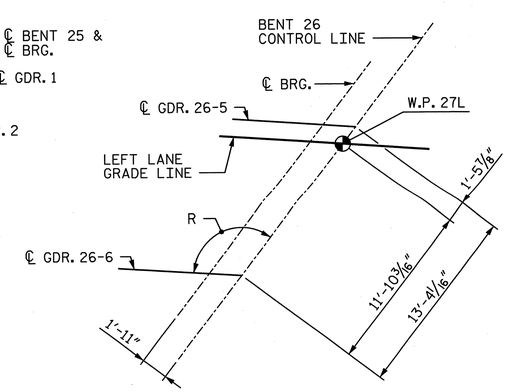

WORKPOINT 27L DETAIL

PROJECT NO. U-2524C
GUILFORD COUNTY
STATION: POT 407+73.35 -L-
= POT 29+32.06 -Y4-
SHEET 12 OF 14

STATE OF NORTH CAROLINA
DEPARTMENT OF TRANSPORTATION
RALEIGH

FRAMING PLAN UNIT H SPANS 25 & 26

-LEFT LANE-

NORTH CAROLINA PROFESSIONAL SEAL 28479 ENGINEER KEVIN G. BAILEY 5-30-13

STV/Ralph Whitehead Associates, Inc.
1000 West Morehead St., Ste. 200
Charlotte, NC 28208
NC License No. F-0991

REVISIONS								SHEET NO.
NO.	BY:	DATE:	NO.	BY:	DATE:			S-97
1			3					TOTAL SHEETS
2			4					836

DRAWN BY : TRL DATE : 2-13
CHECKED BY : MFR DATE : 2-13
DESIGN ENGINEER OF RECORD: M. ROBBINS DATE : 5-13

5/30/2013 4:54:38 PM R:\ustation\Finals\Framing Plan_Span 25-26 Sheet 12 of 14.dgn

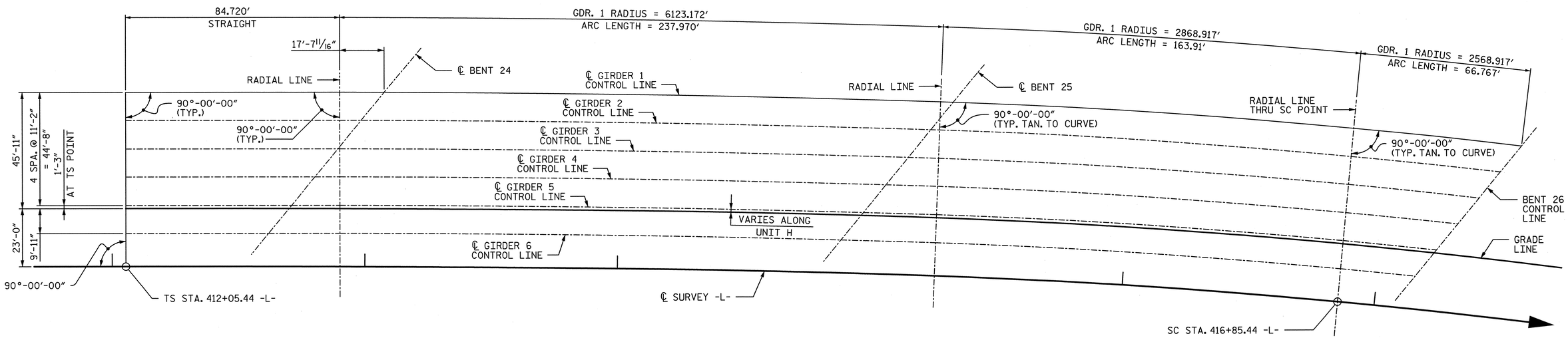

UNIT H LAYOUT

(GIRDERS 2-6 ARE PARALLEL TO GIRDER 1)

PROJECT NO. U-2524C

GUILFORD COUNTY

STATION: POT 407+73.35 -L-
= POT 29+32.06 -Y4-

SHEET 13 OF 14

STATE OF NORTH CAROLINA
DEPARTMENT OF TRANSPORTATION
RALEIGH

FRAMING PLAN
UNIT H LAYOUT

-LEFT LANE-

NORTH CAROLINA PROFESSIONAL SEAL 28479 ENGINEER KEVIN G. BAILEY
5-30-13

STV / Ralph Whitehead Associates, Inc.
1000 West Morehead St., Ste. 200
Charlotte, NC 28208
NC License No. F-0991

REVISIONS							
NO.	BY:	DATE:	NO.	BY:	DATE:		SHEET NO. S-98
1			3				TOTAL SHEETS 836
2			4				

DRAWN BY : TRL DATE : 2-13
CHECKED BY : MFR DATE : 2-13
DESIGN ENGINEER OF RECORD: M. ROBBINS DATE : 5-13

5/30/2013 4:54:42 PM R:\ustation\Finals\Framing Plan_Span 25-26 Sheet 13 of 14.dgn

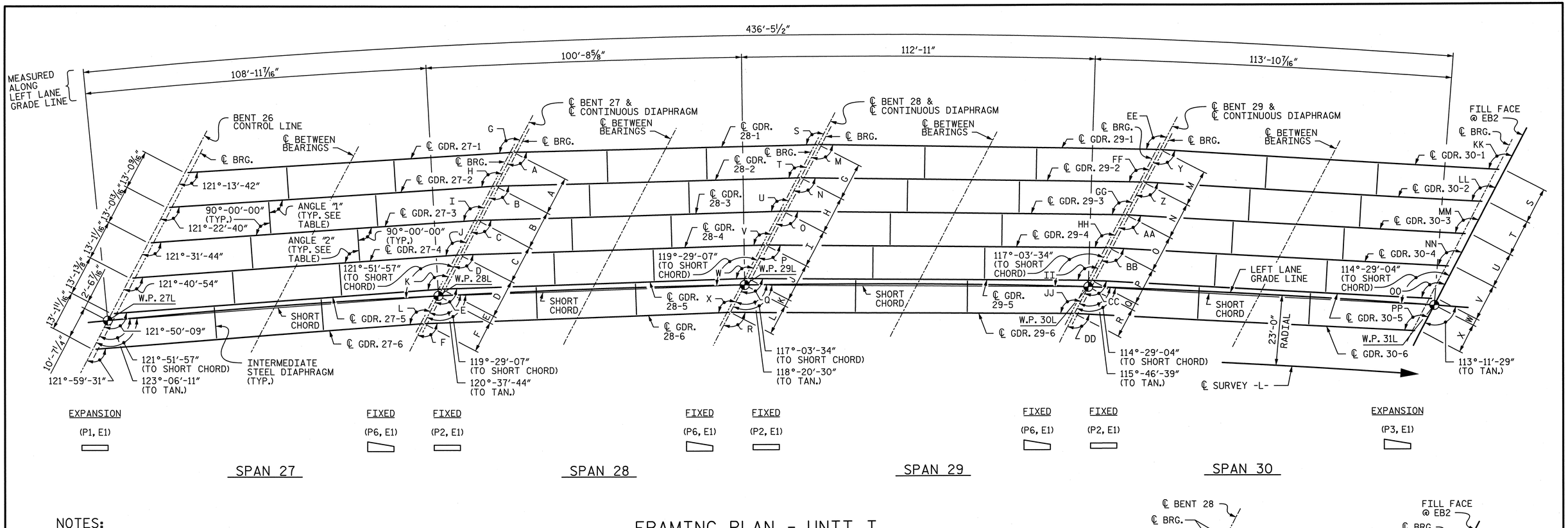

NOTES:

1. FOR THE LOCATION OF FORMED HOLES FOR THE INTERMEDIATE STEEL DIAPHRAGMS IN GIRDERS, SEE "PRESTRESSED CONCRETE MODIFIED BULB TEE GIRDER DIAPHRAGM DETAILS" SHEET.

FRAMING PLAN - UNIT I

DIAPHRAGM ANGLES

	DIAPHRAGM	ANGLE "1"	ANGLE "2"
SPAN 27	27-1 TO 27-2	89°-51'-01"	90°-08'-59"
	27-2 TO 27-3	89°-50'-56"	90°-09'-04"
	27-3 TO 27-4	89°-50'-50"	90°-09'-10"
	27-4 TO 27-5	89°-50'-45"	90°-09'-15"
	27-5 TO 27-6	89°-50'-39"	90°-09'-21"
SPAN 28	28-1 TO 28-2	89°-51'-50"	90°-08'-10"
	28-2 TO 28-3	89°-51'-45"	90°-08'-15"
	28-3 TO 28-4	89°-51'-40"	90°-08'-20"
	28-4 TO 28-5	89°-51'-35"	90°-08'-25"
	28-5 TO 28-6	89°-51'-30"	90°-08'-30"
SPAN 29	29-1 TO 29-2	89°-52'-37"	90°-07'-23"
	29-2 TO 29-3	89°-52'-32"	90°-07'-28"
	29-3 TO 29-4	89°-52'-28"	90°-07'-32"
	29-4 TO 29-5	89°-52'-23"	90°-07'-37"
	29-5 TO 29-6	89°-52'-19"	90°-07'-41"
SPAN 30	30-1 TO 30-2	89°-53'-24"	90°-06'-36"
	30-2 TO 30-3	89°-53'-21"	90°-06'-39"
	30-3 TO 30-4	89°-53'-17"	90°-06'-43"
	30-4 TO 30-5	89°-53'-13"	90°-06'-47"
	30-5 TO 30-6	89°-53'-09"	90°-06'-51"

℄ GIRDER TO BENT ANGLES

A	118°-54'-18"	AA	114°-14'-15"
B	119°-02'-28"	BB	114°-20'-58"
C	119°-10'-43"	CC	114°-27'-45"
D	119°-19'-04"	DD	114°-34'-36"
E	119°-27'-29"	EE	116°-32'-06"
F	119°-35'-59"	FF	116°-39'-30"
G	121°-13'-42"	GG	116°-46'-57"
H	121°-22'-40"	HH	116°-54'-29"
I	121°-31'-45"	II	117°-02'-06"
J	121°-40'-54"	JJ	117°-09'-47"
K	121°-50'-10"	KK	114°-00'-59"
L	121°-59'-31"	LL	114°-07'-35"
M	116°-32'-06"	MM	114°-14'-14"
N	116°-39'-29"	NN	114°-20'-57"
O	116°-46'-57"	OO	114°-27'-45"
P	116°-54'-29"	PP	114°-34'-36"
Q	117°-02'-06"		
R	117°-09'-47"		
S	118°-54'-18"		
T	119°-02'-28"		
U	119°-10'-44"		
V	119°-19'-04"		
W	119°-27'-29"		
X	119°-35'-59"		
Y	114°-01'-00"		
Z	114°-07'-36"		

DISTANCES ALONG ℄ BENT

BENT 27	A	12'-8 9/16"
	B	12'-8 13/16"
	C	12'-9"
	D	12'-9¼"
	E	2'-5⅝"
	F	10'-3⅞"
BENT 28	G	12'-5 5/16"
	H	12'-5½"
	I	12'-5 11/16"
	J	12'-5⅞"
	K	2'-5"
	L	10'-1 1/16"
BENT 29	M	12'-2 1/16"
	N	12'-2 3/16"
	O	12'-2 5/16"
	P	12'-2½"
	Q	2'-4 5/16"
	R	9'-10 5/16"
END BENT 2	S	11'-11 3/16"
	T	11'-11 5/16"
	U	11'-11 7/16"
	V	11'-11½"
	W	2'-3¾"
	X	9'-7⅞"

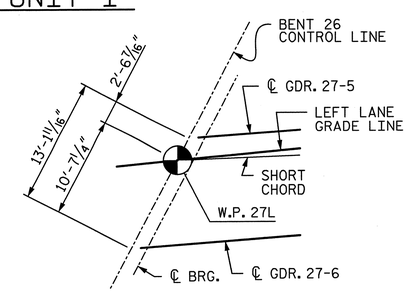

WORKPOINT 27L DETAIL

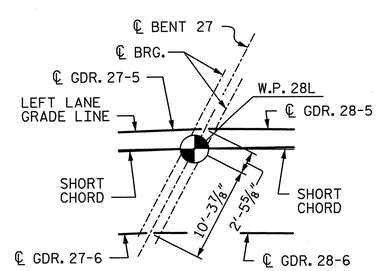

WORKPOINT 28L DETAIL

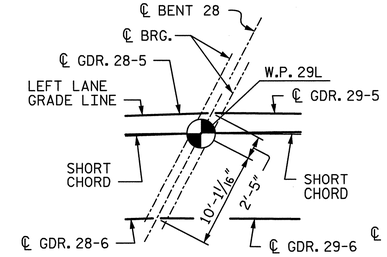

WORKPOINT 29L DETAIL

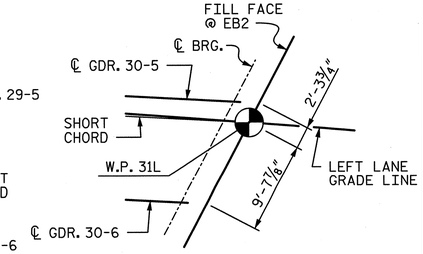

WORKPOINT 31L DETAIL

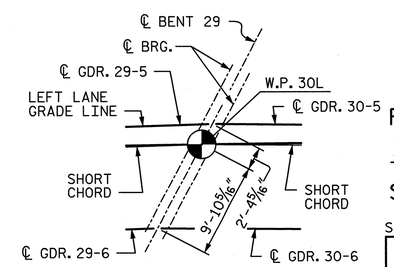

WORKPOINT 30L DETAIL

NORTH CAROLINA PROFESSIONAL SEAL 28479 ENGINEER KEVIN G. BAILEY 5-30-13

PROJECT NO. U-2524C

GUILFORD COUNTY

STATION: POT 407+73.35 -L-
= POT 29+32.06 -Y4-

SHEET 14 OF 14

STATE OF NORTH CAROLINA
DEPARTMENT OF TRANSPORTATION
RALEIGH

FRAMING PLAN
UNIT I SPANS 27-30

-LEFT LANE-

STV / Ralph Whitehead Associates, Inc.
1000 West Morehead St., Ste. 200
Charlotte, NC 28208
NC License No. F-0991

REVISIONS							SHEET NO.
NO.	BY:	DATE:	NO.	BY:	DATE:		S-99
1			3				TOTAL SHEETS
2			4				836

DRAWN BY : CLG DATE : 8-12
CHECKED BY : TJT DATE : 11-12
DESIGN ENGINEER OF RECORD: T. TOWNSEND DATE : 5-13

5/30/2013 4:54:46 PM R:\station\Finals\Framing Plan_Span 27-30 Sheet 14 of 14.dgn

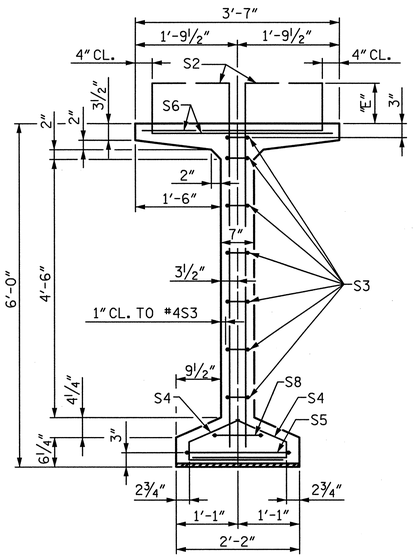

SECTION A-A

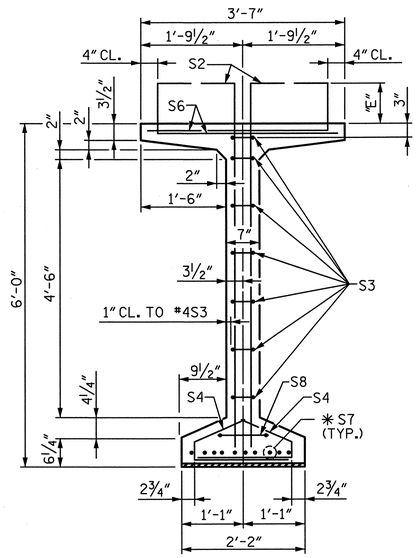

SECTION B-B

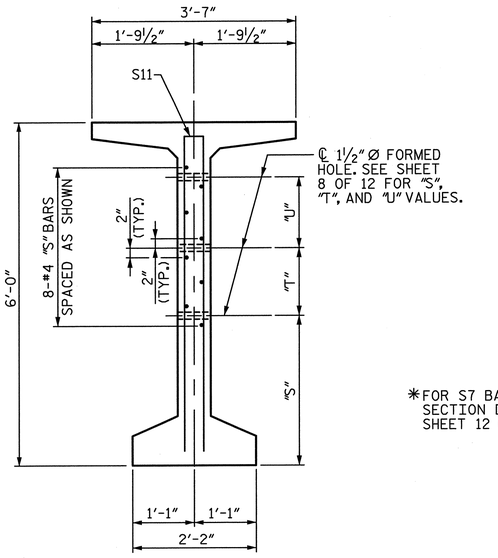

SECTION C-C

(S1 AND S9 BARS NOT SHOWN)
(SEE PARTIAL ELEVATION ON SHEET 8 OF 12)

NOTES:

1. FOR STRAND LAYOUT, SEE SHEETS 6 & 7 OF 12.
2. FOR DIAPHRAGM HOLE LOCATIONS, SEE SHEET 8 OF 12.
3. SEE SHEETS 9 THROUGH 11 OF 12 FOR VARIABLE DIMENSIONS AND QUANTITIES.
4. FOR GIRDER DETAILS, SEE SHEET 12 OF 12.
5. SEE SHEET 12 OF 12 FOR NOTES.

*FOR S7 BARS, SEE SECTION D-D ON SHEET 12 OF 12.

♦ SEE GIRDER TABLES ON SHEETS 9 THROUGH 11 OF 12 FOR VALUES.

0.6" Ø L. R. GRADE 270 STRANDS		
AREA (SQUARE INCHES)	ULTIMATE STRENGTH (LBS. PER STRAND)	APPLIED PRESTRESS (LBS. PER STRAND)
0.217	58,600	43,950

REINFORCING STEEL FOR ONE GDR

BAR	NUMBER	SIZE	TYPE	LENGTH	WEIGHT
S1	♦	♦	1	♦	♦
S2	40	#6	1	♦	♦
S3	14	#4	2	8'-5"	79
S4	100	#4	3	3'-0"	200
S5	1	#5	2	9'-10"	10
S6	♦	#5	4	♦	♦
*S7	10	#5	STR.	5'-0"	52
S8	2	#5	2	9'-0"	19
S9	♦	#5	STR.	3'-3"	♦
S10	1	#3	STR.	1'-10"	1
S11	♦	#5	2	11'-8"	♦
S12	♦	#4	STR.	8'-0"	♦
S13	♦	#4	STR.	♦	♦

*NOTE: S7 BARS SHALL BE BENT BEFORE SHIPMENT. HEAT BENDING SHALL NOT BE ALLOWED.

BAR TYPES

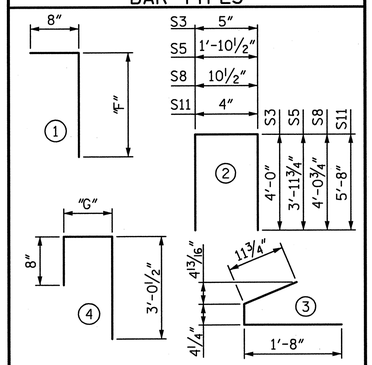

ALL BAR DIMENSIONS ARE OUT-TO-OUT.

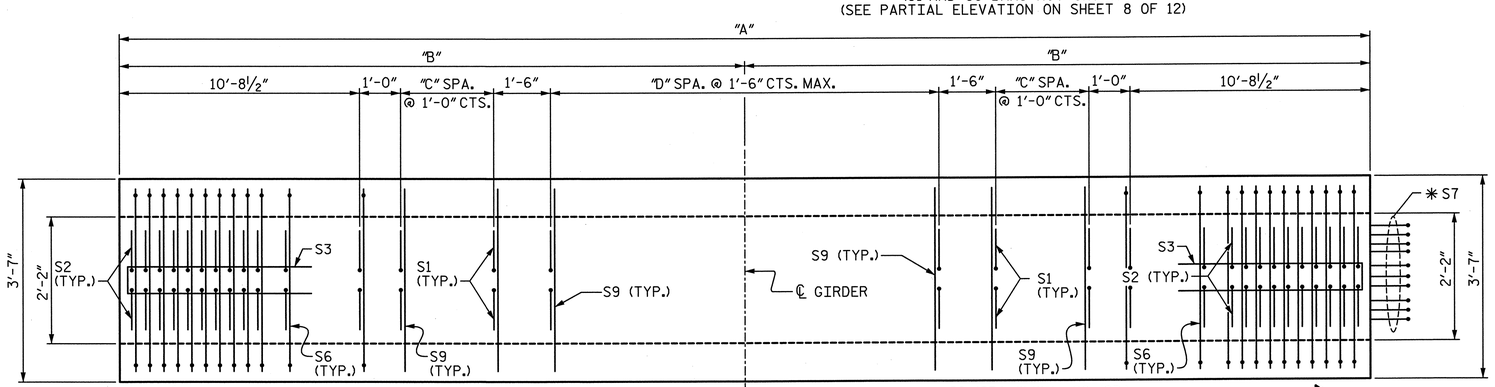

PLAN OF GIRDER

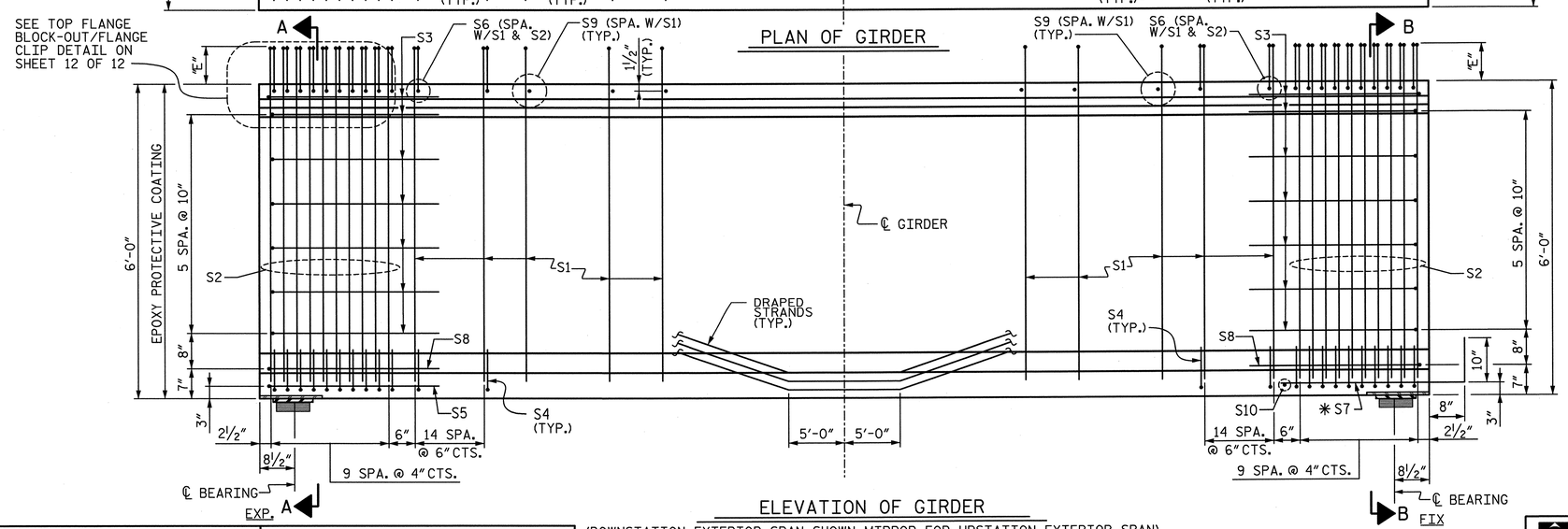

ELEVATION OF GIRDER

(DOWNSTATION EXTERIOR SPAN SHOWN, MIRROR FOR UPSTATION EXTERIOR SPAN)
(GENERIC DRAPED STRANDS SHOWN TO INDICATE HOLD DOWN LOCATIONS)

NORTH CAROLINA PROFESSIONAL SEAL 28479 ENGINEER KEVIN G. BAILEY 5-30-13

PROJECT NO. U-2524C
GUILFORD COUNTY
STATION: POT 407+73.35 -L-
= POT 29+32.06 -Y4-

SHEET 1 OF 12

STATE OF NORTH CAROLINA
DEPARTMENT OF TRANSPORTATION
RALEIGH

PRESTRESSED CONCRETE MODIFIED 72" BULB TEE GIRDER PLAN AND ELEVATION

-LEFT LANE-

STV / Ralph Whitehead Associates, Inc.
1000 West Morehead St., Ste. 200
Charlotte, NC 28208
NC License No. F-0991

REVISIONS							SHEET NO.
NO.	BY:	DATE:	NO.	BY:	DATE:		S-100
1			3				TOTAL SHEETS
2			4				83

DRAWN BY : VMW DATE : 12-12
CHECKED BY : TJT DATE : 12-12
DESIGN ENGINEER OF RECORD: T. TOWNSEND DATE : 5-13

5/30/2013 4:54:51 PM R:\ustation\Finals\PCMBT 1 of 12.dgn

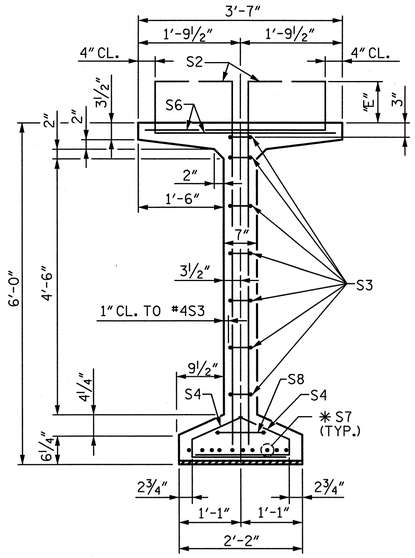

SECTION B-B

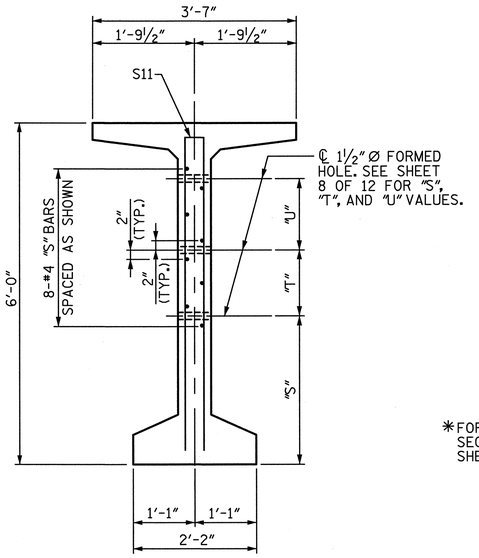

SECTION C-C

(S1 AND S9 BARS NOT SHOWN)
(SEE PARTIAL ELEVATION ON SHEET 8 OF 12)

✱FOR S7 BARS, SEE SECTION D-D ON SHEET 12 OF 12.

NOTES:

1. FOR STRAND LAYOUT, SEE SHEETS 6 & 7 OF 12.
2. FOR DIAPHRAGM HOLE LOCATIONS, SEE SHEET 8 OF 12.
3. SEE SHEETS 9 THROUGH 11 OF 12 FOR VARIABLE DIMENSIONS AND QUANTITIES.
4. FOR GIRDER DETAILS, SEE SHEET 12 OF 12.
5. SEE SHEET 12 OF 12 FOR NOTES.

0.6" Ø L. R. GRADE 270 STRANDS		
AREA (SQUARE INCHES)	ULTIMATE STRENGTH (LBS. PER STRAND)	APPLIED PRESTRESS (LBS. PER STRAND)
0.217	58,600	43,950

REINFORCING STEEL FOR ONE GDR

BAR	NUMBER	SIZE	TYPE	LENGTH	WEIGHT
S1	♦	♦	①	♦	♦
S2	40	#6	①	♦	♦
S3	14	#4	②	8'-5"	79
S4	100	#4	③	3'-0"	200
S6	♦	#5	④	♦	♦
✱S7	20	#5	STR.	5'-0"	104
S8	2	#5	②	9'-0"	19
S9	♦	#5	STR.	3'-3"	♦
S10	2	#3	STR.	1'-10"	1
S11	♦	#5	②	11'-8"	♦
S12	♦	#4	STR.	8'-0"	♦
S13	♦	#4	STR.	♦	♦

✱NOTE: S7 BARS SHALL BE BENT BEFORE SHIPMENT. HEAT BENDING SHALL NOT BE ALLOWED.

♦ SEE GIRDER TABLES ON SHEETS 9 THROUGH 11 OF 12 FOR VALUES.

BAR TYPES

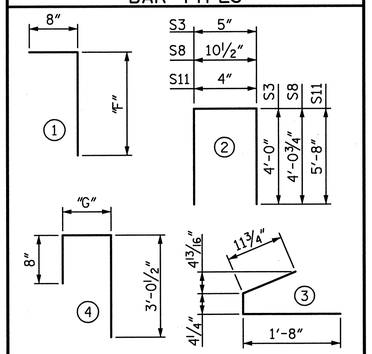

ALL BAR DIMENSIONS ARE OUT-TO-OUT.

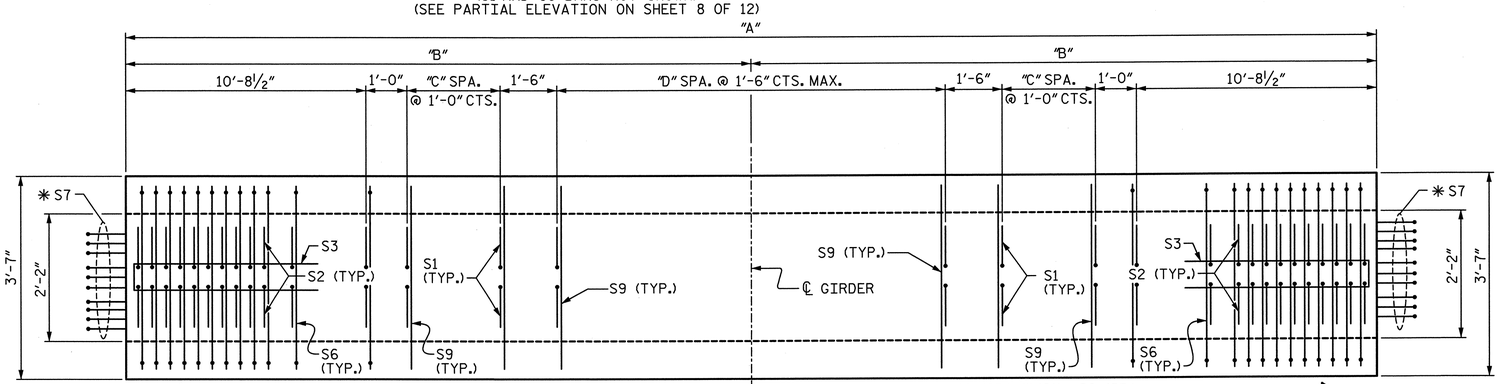

PLAN OF GIRDER

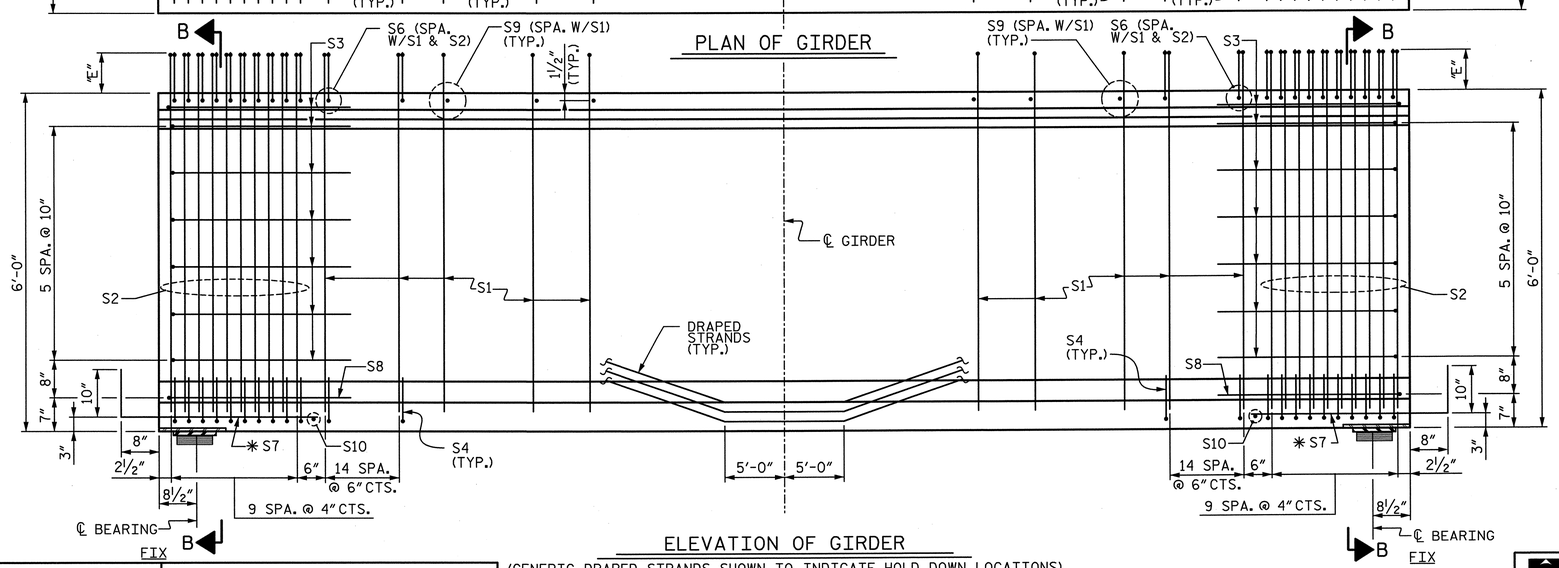

ELEVATION OF GIRDER

(GENERIC DRAPED STRANDS SHOWN TO INDICATE HOLD DOWN LOCATIONS)

PROJECT NO. U-2524C
GUILFORD COUNTY
STATION: POT 407+73.35 -L-
= POT 29+32.06 -Y4-

SHEET 2 OF 12

STATE OF NORTH CAROLINA
DEPARTMENT OF TRANSPORTATION
RALEIGH

PRESTRESSED CONCRETE MODIFIED 72" BULB TEE GIRDER PLAN AND ELEVATION

-LEFT LANE-

NORTH CAROLINA PROFESSIONAL SEAL 28479 ENGINEER KEVIN G. BAILEY
5-30-13

STV / Ralph Whitehead Associates, Inc.
1000 West Morehead St., Ste. 200
Charlotte, NC 28208
NC License No. F-0991

REVISIONS						
NO.	BY:	DATE:	NO.	BY:	DATE:	
1			3			
2			4			

SHEET NO. S-101
TOTAL SHEETS 836

DRAWN BY : VMW DATE : 12-12
CHECKED BY : TJT DATE : 12-12
DESIGN ENGINEER OF RECORD: T. TOWNSEND DATE : 5-13

5/30/2013 4:54:55 PM R:\station\Finals\PCMBT 2 of 12.dgn

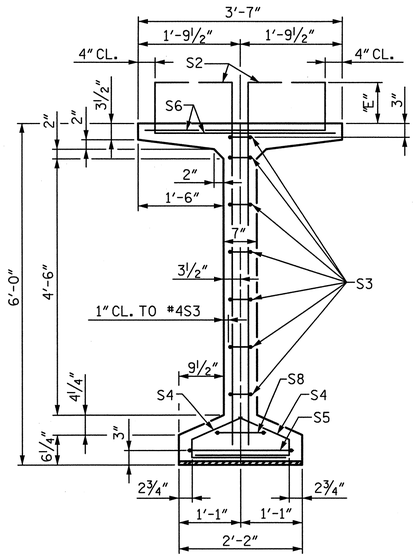

SECTION A-A

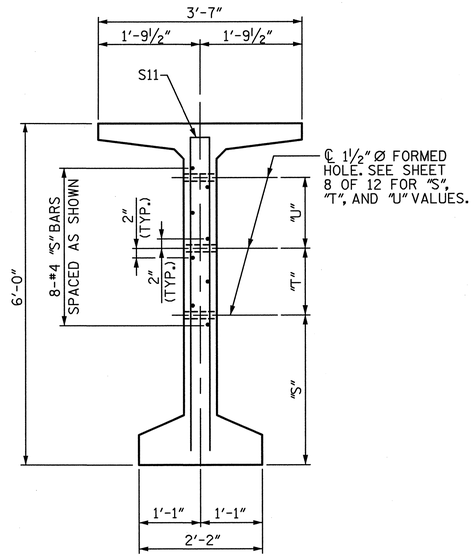

SECTION C-C

(S1 AND S9 BARS NOT SHOWN)
(SEE PARTIAL ELEVATION ON SHEET 8 OF 12)

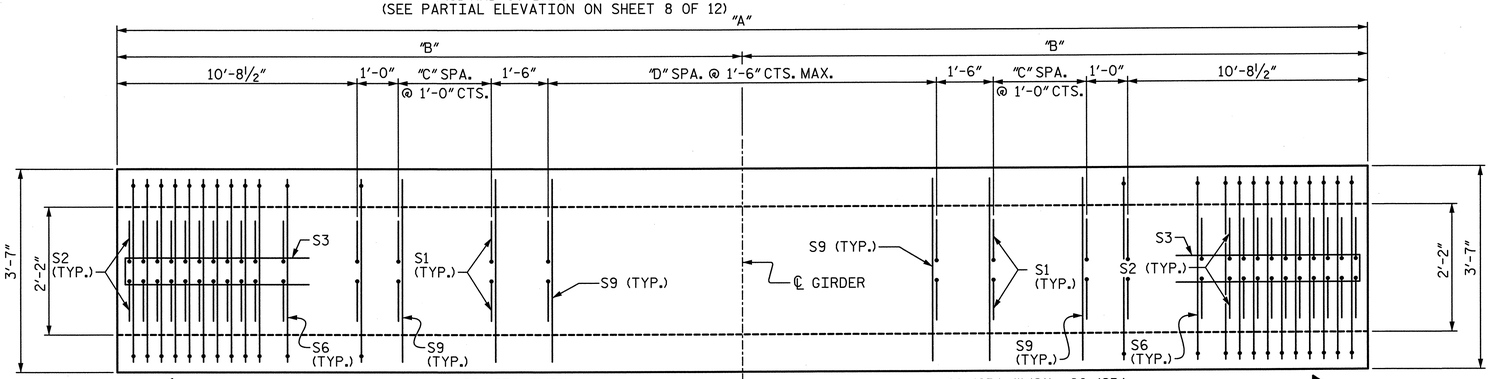

PLAN OF GIRDER

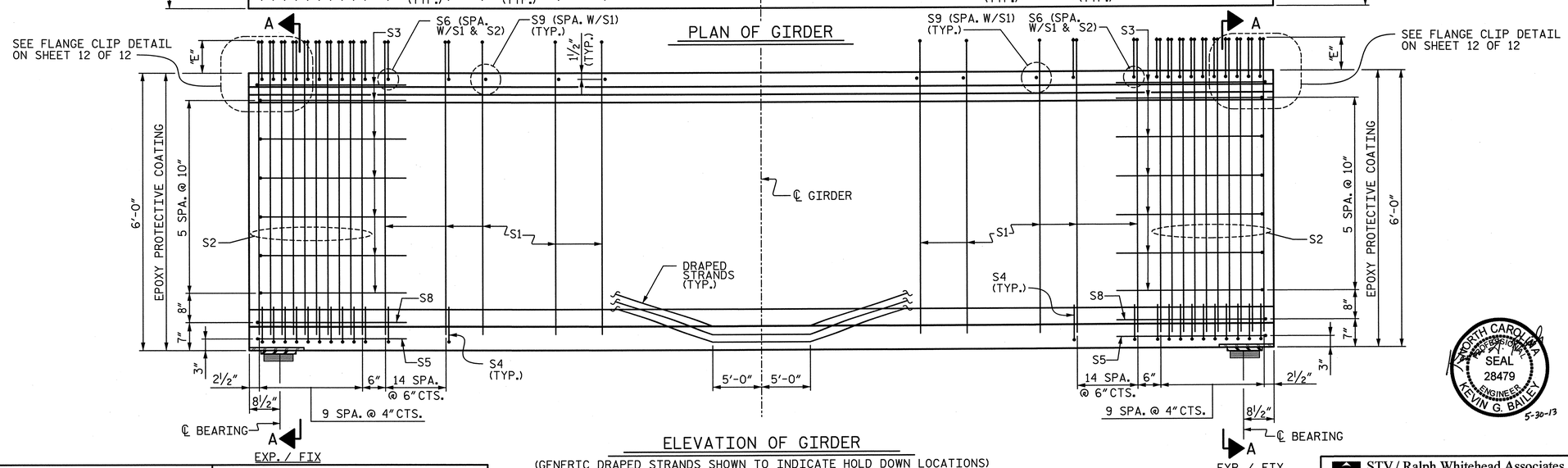

ELEVATION OF GIRDER

(GENERIC DRAPED STRANDS SHOWN TO INDICATE HOLD DOWN LOCATIONS)

NOTES:

1. FOR STRAND LAYOUT, SEE SHEETS 6 & 7 OF 12.
2. FOR DIAPHRAGM HOLE LOCATIONS, SEE SHEET 8 OF 12.
3. SEE SHEETS 9 THROUGH 11 OF 12 FOR VARIABLE DIMENSIONS AND QUANTITIES.
4. FOR GIRDER DETAILS, SEE SHEET 12 OF 12.
5. SEE SHEET 12 OF 12 FOR NOTES.

♦ SEE GIRDER TABLES ON SHEETS 9 THROUGH 11 OF 12 FOR VALUES.

0.6" Ø L. R. GRADE 270 STRANDS

AREA (SQUARE INCHES)	ULTIMATE STRENGTH (LBS. PER STRAND)	APPLIED PRESTRESS (LBS. PER STRAND)
0.217	58,600	43,950

REINFORCING STEEL FOR ONE GDR

BAR	NUMBER	SIZE	TYPE	LENGTH	WEIGHT
S1	♦	♦	1	♦	♦
S2	40	#6	1	♦	♦
S3	14	#4	2	8'-5"	79
S4	100	#4	3	3'-0"	200
S5	2	#5	2	9'-10"	21
S6	♦	#5	4	♦	♦
S8	2	#5	2	9'-0"	19
S9	♦	#5	STR.	3'-3"	♦
S11	♦	#5	2	11'-8"	♦
S12	♦	#4	STR.	8'-0"	♦
S13	♦	#4	STR.	♦	♦

BAR TYPES

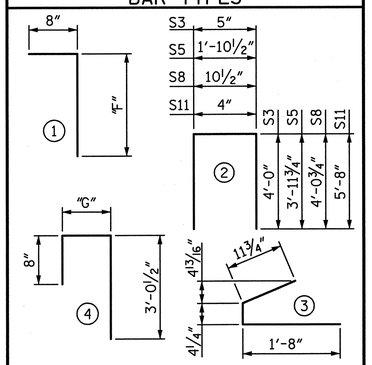

ALL BAR DIMENSIONS ARE OUT-TO-OUT.

PROJECT NO. U-2524C

GUILFORD COUNTY

STATION: POT 407+73.35 -L-
= POT 29+32.06 -Y4-

SHEET 3 OF 12

STATE OF NORTH CAROLINA
DEPARTMENT OF TRANSPORTATION
RALEIGH

PRESTRESSED CONCRETE MODIFIED 72" BULB TEE GIRDER PLAN AND ELEVATION

-LEFT LANE-

NORTH CAROLINA PROFESSIONAL SEAL 28479 ENGINEER KEVIN G. BAILEY 5-30-13

DRAWN BY : VMW	DATE : 12-12	DESIGN ENGINEER OF RECORD: T. TOWNSEND	DATE : 5-13
CHECKED BY : TJT	DATE : 12-12		

STV / Ralph Whitehead Associates, Inc.
1000 West Morehead St., Ste. 200
Charlotte, NC 28208
NC License No. F-0991

REVISIONS

NO.	BY:	DATE:	NO.	BY:	DATE:
1			3		
2			4		

SHEET NO. S-102

TOTAL SHEETS 836

R:\ustation\Finals\PCMBT 3 of 12.dgn 5/30/2013 4:54:59 PM

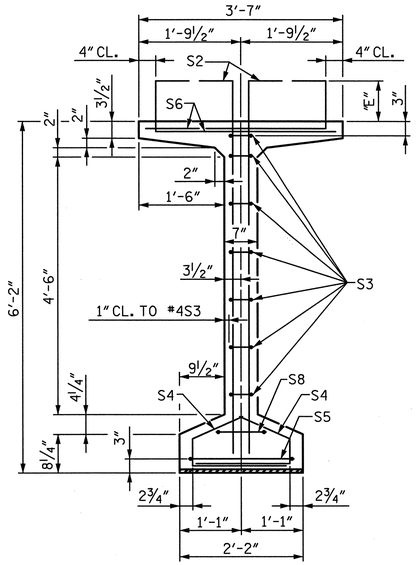

SECTION A-A

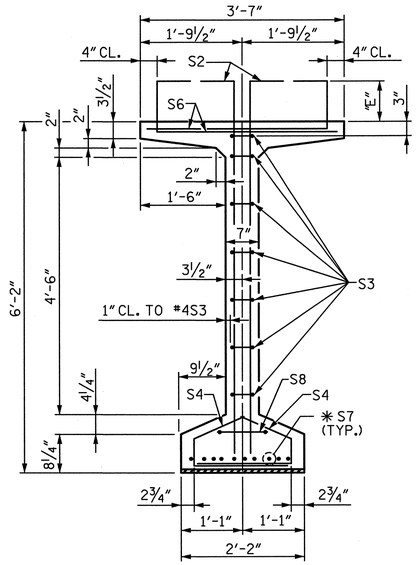

SECTION B-B

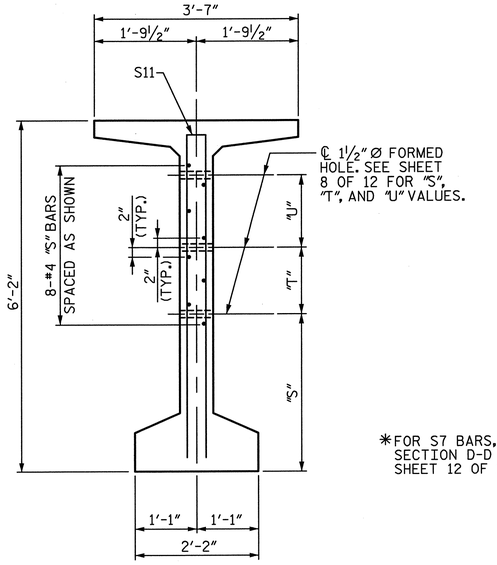

SECTION C-C

(S1 AND S9 BARS NOT SHOWN)
(SEE PARTIAL ELEVATION ON SHEET 8 OF 12)

✱ FOR S7 BARS, SEE SECTION D-D ON SHEET 12 OF 12.

NOTES:

1. FOR STRAND LAYOUT, SEE SHEETS 6 & 7 OF 12.
2. FOR DIAPHRAGM HOLE LOCATIONS, SEE SHEET 8 OF 12.
3. SEE SHEETS 9 THROUGH 11 OF 12 FOR VARIABLE DIMENSIONS AND QUANTITIES.
4. FOR GIRDER DETAILS, SEE SHEET 12 OF 12.
5. SEE SHEET 12 OF 12 FOR NOTES.

♦ SEE GIRDER TABLES ON SHEETS 9 THROUGH 11 OF 12 FOR VALUES.

0.6" Ø L. R. GRADE 270 STRANDS

AREA (SQUARE INCHES)	ULTIMATE STRENGTH (LBS. PER STRAND)	APPLIED PRESTRESS (LBS. PER STRAND)
0.217	58,600	43,950

REINFORCING STEEL FOR ONE GDR

BAR	NUMBER	SIZE	TYPE	LENGTH	WEIGHT
S1	♦	♦	1	♦	♦
S2	40	#6	1	♦	♦
S3	14	#4	2	8'-5"	79
S4	100	#4	3	3'-2"	212
S5	1	#5	2	9'-10"	10
S6	♦	#5	4	♦	♦
✱ S7	10	#5	STR.	5'-0"	52
S8	2	#5	2	9'-0"	19
S9	♦	#5	STR.	3'-3"	♦
S10	1	#3	STR.	1'-10"	1
S11	♦	#5	2	12'-0"	♦
S12	♦	#4	STR.	8'-0"	♦
S13	♦	#4	STR.	♦	♦

✱ NOTE: S7 BARS SHALL BE BENT BEFORE SHIPMENT. HEAT BENDING SHALL NOT BE ALLOWED.

BAR TYPES

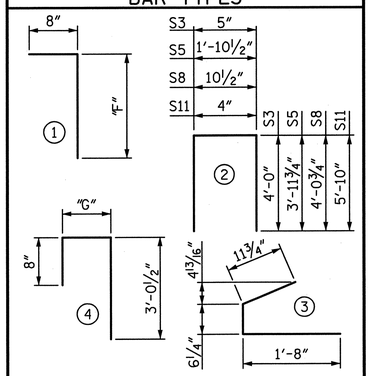

ALL BAR DIMENSIONS ARE OUT-TO-OUT.

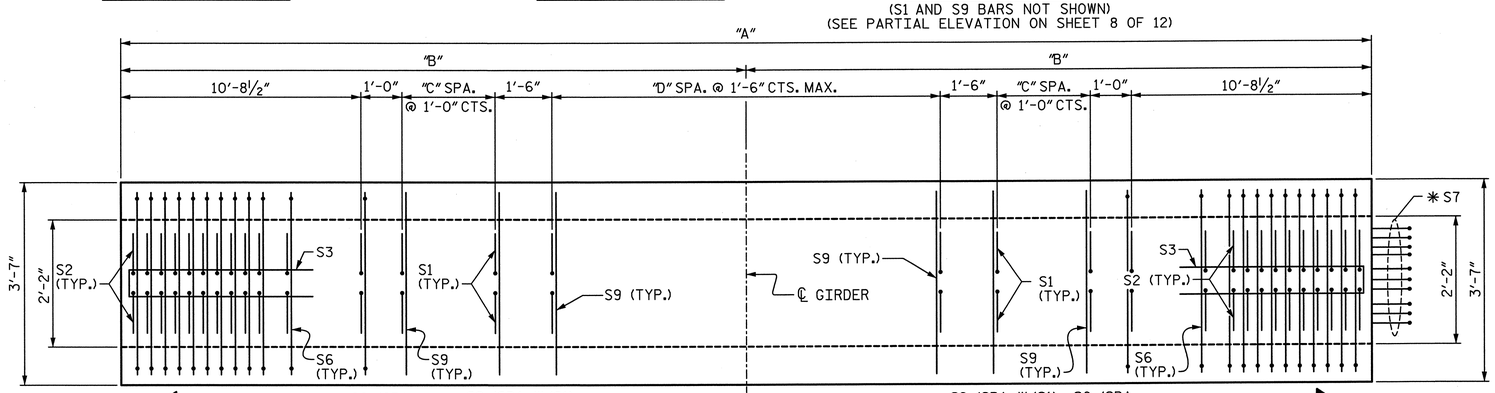

PLAN OF GIRDER

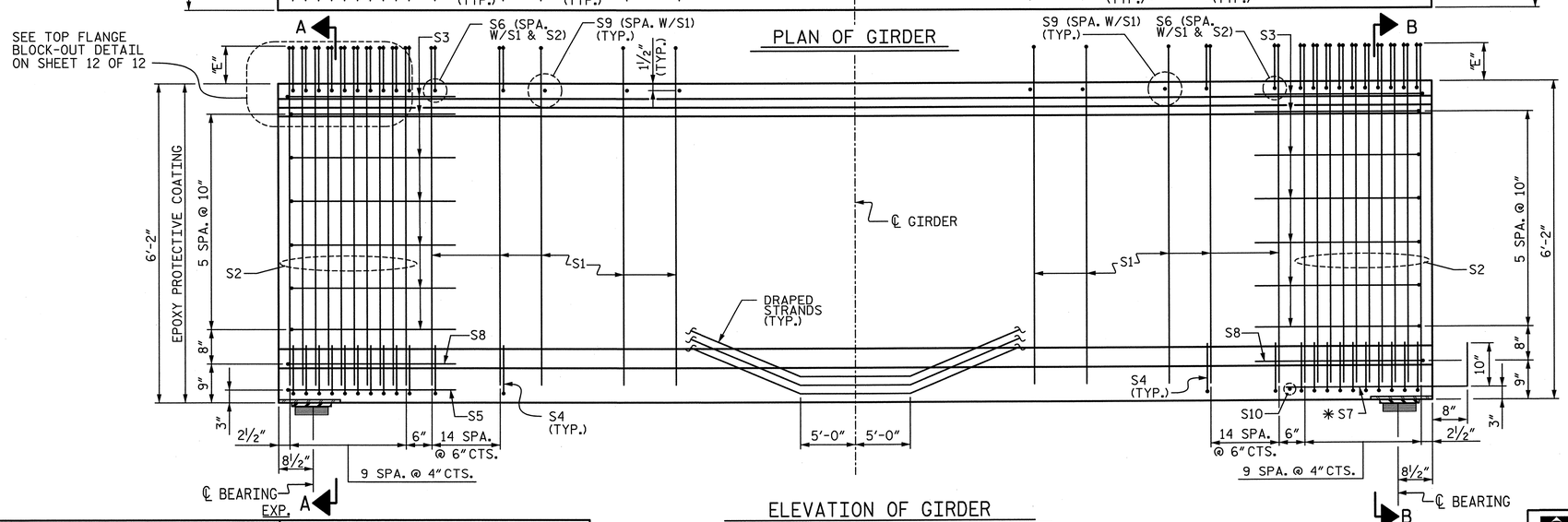

ELEVATION OF GIRDER

(DOWNSTATION EXTERIOR SPAN SHOWN, MIRROR FOR UPSTATION EXTERIOR SPAN)
(GENERIC DRAPED STRANDS SHOWN TO INDICATE HOLD DOWN LOCATIONS)

PROJECT NO. U-2524C
GUILFORD COUNTY
STATION: POT 407+73.35 -L-
= POT 29+32.06 -Y4-

SHEET 4 OF 12

STATE OF NORTH CAROLINA
DEPARTMENT OF TRANSPORTATION
RALEIGH

PRESTRESSED CONCRETE MODIFIED 74" BULB TEE GIRDER PLAN AND ELEVATION

-LEFT LANE-

NORTH CAROLINA PROFESSIONAL SEAL 28479 ENGINEER KEVIN G. BAILEY 5-30-13

STV / Ralph Whitehead Associates, Inc.
1000 West Morehead St., Ste. 200
Charlotte, NC 28208
NC License No. F-0991

REVISIONS							SHEET NO.
NO.	BY:	DATE:	NO.	BY:	DATE:		S-103
1			3				TOTAL SHEETS
2			4				83

DRAWN BY : VMW DATE : 12-12
CHECKED BY : TJT DATE : 12-12

DESIGN ENGINEER OF RECORD: T. TOWNSEND DATE : 5-13

5/30/2013 4:55:03 PM R:\ustation\Finals\PCMBT 4 of 12.dgn

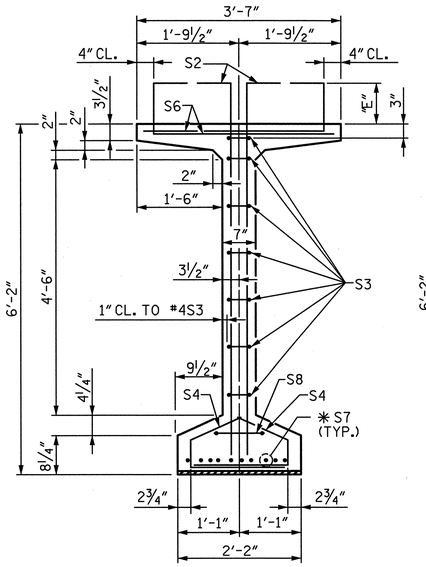

SECTION B-B

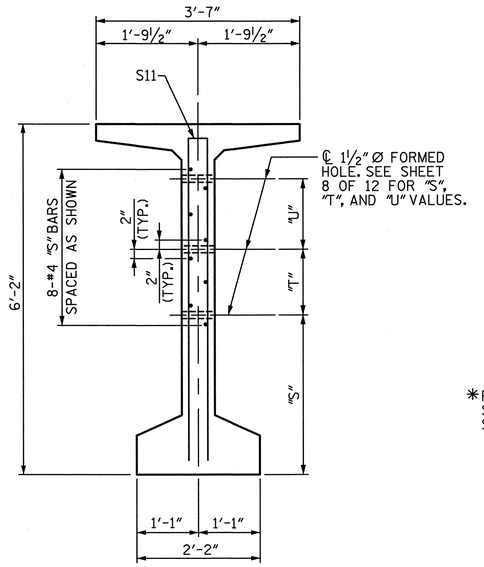

SECTION C-C

(S1 AND S9 BARS NOT SHOWN)
(SEE PARTIAL ELEVATION ON SHEET 8 OF 12)

✱FOR S7 BARS, SEE SECTION D-D ON SHEET 12 OF 12.

NOTES:

1. FOR STRAND LAYOUT, SEE SHEETS 6 & 7 OF 12.
2. FOR DIAPHRAGM HOLE LOCATIONS, SEE SHEET 8 OF 12.
3. SEE SHEETS 9 THROUGH 11 OF 12 FOR VARIABLE DIMENSIONS AND QUANTITIES.
4. FOR GIRDER DETAILS, SEE SHEET 12 OF 12.
5. SEE SHEET 12 OF 12 FOR NOTES.

0.6" Ø L. R. GRADE 270 STRANDS

AREA (SQUARE INCHES)	ULTIMATE STRENGTH (LBS. PER STRAND)	APPLIED PRESTRESS (LBS. PER STRAND)
0.217	58,600	43,950

REINFORCING STEEL FOR ONE GDR

BAR	NUMBER	SIZE	TYPE	LENGTH	WEIGHT
S1	♦	♦	①	♦	♦
S2	40	#6	①	♦	♦
S3	14	#4	②	8'-5"	79
S4	100	#4	③	3'-2"	212
S6	♦	#5	④	♦	♦
✱S7	20	#5	STR.	5'-0"	104
S8	2	#5	②	9'-0"	19
S9	♦	#5	STR.	3'-3"	♦
S10	2	#3	STR.	1'-10"	1
S11	♦	#5	②	12'-0"	♦
S12	♦	#4	STR.	8'-0"	♦
S13	♦	#4	STR.	♦	♦

✱NOTE: S7 BARS SHALL BE BENT BEFORE SHIPMENT. HEAT BENDING SHALL NOT BE ALLOWED.

♦ SEE GIRDER TABLES ON SHEETS 9 THROUGH 11 OF 12 FOR VALUES.

BAR TYPES

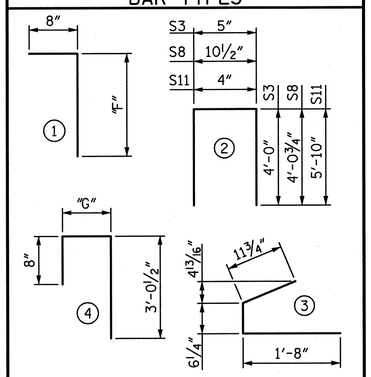

ALL BAR DIMENSIONS ARE OUT-TO-OUT.

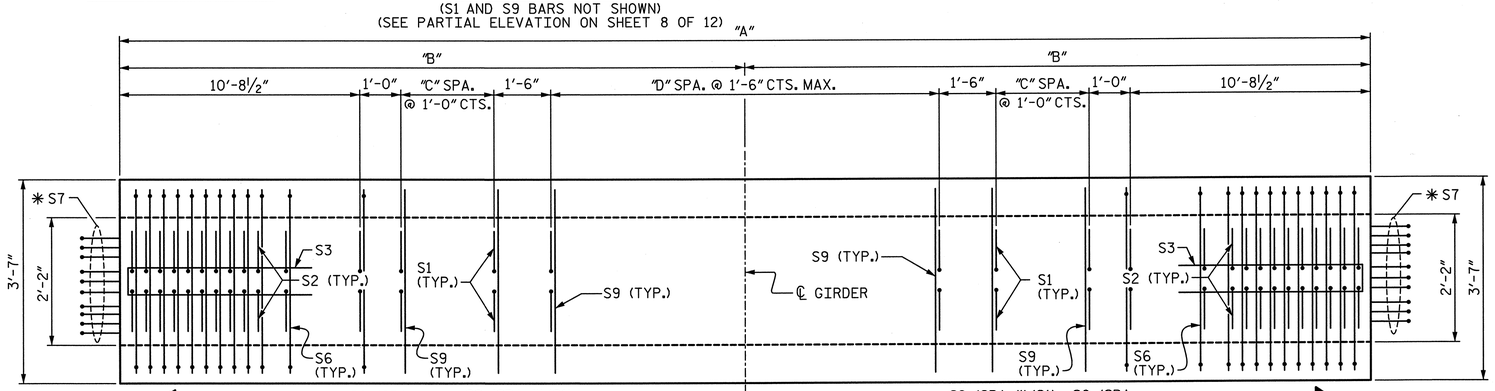

PLAN OF GIRDER

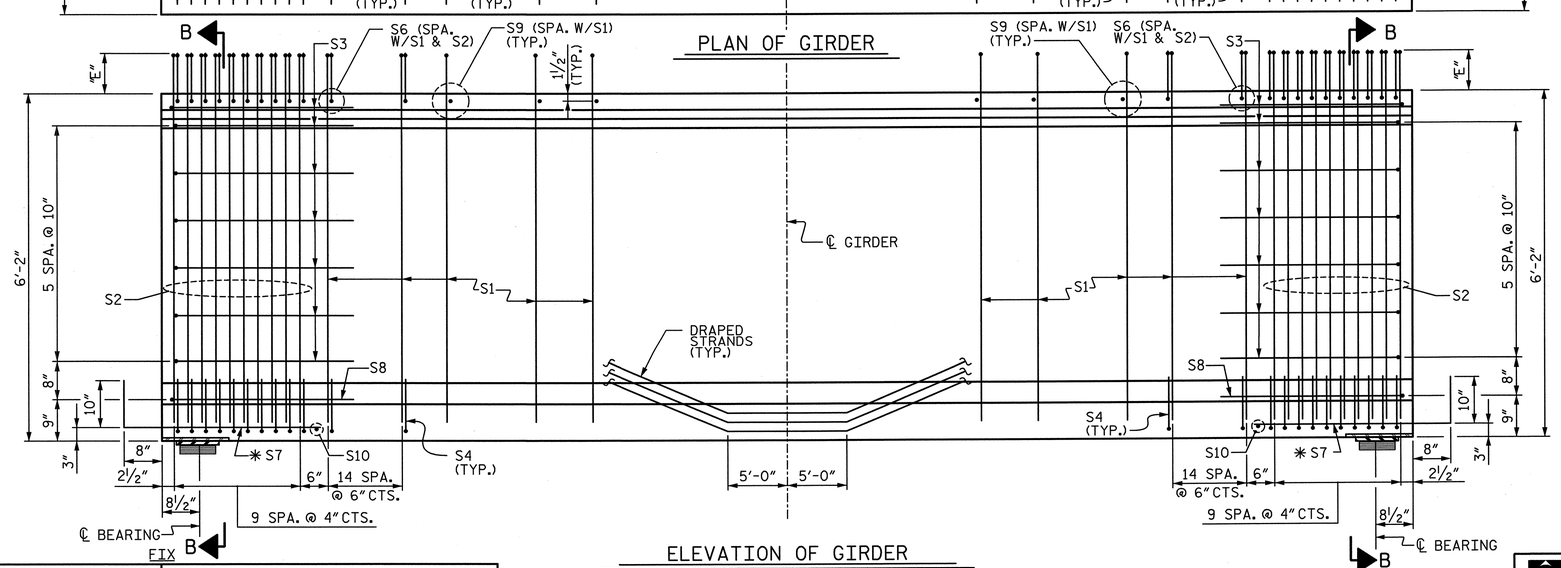

ELEVATION OF GIRDER

(GENERIC DRAPED STRANDS SHOWN TO INDICATE HOLD DOWN LOCATIONS)

PROJECT NO. U-2524C
GUILFORD COUNTY
STATION: POT 407+73.35 -L-
= POT 29+32.06 -Y4-

SHEET 5 OF 12

STATE OF NORTH CAROLINA
DEPARTMENT OF TRANSPORTATION
RALEIGH

PRESTRESSED CONCRETE MODIFIED 74" BULB TEE GIRDER PLAN AND ELEVATION

-LEFT LANE-

NORTH CAROLINA PROFESSIONAL SEAL 28479 ENGINEER KEVIN G. BAILEY
5-30-13

DRAWN BY : VMW	DATE : 12-12	DESIGN ENGINEER OF RECORD: T. TOWNSEND	DATE : 5-13
CHECKED BY : TJT	DATE : 12-12		

STV / Ralph Whitehead Associates, Inc.
1000 West Morehead St., Ste. 200
Charlotte, NC 28208
NC License No. F-0991

REVISIONS								SHEET NO.
NO.	BY:	DATE:	NO.	BY:	DATE:			S-104
1			3					TOTAL SHEETS
2			4					83

5/30/2013 4:55:07 PM R:\ustation\Finals\PCMBT 5 of 12.dgn

NOTES:

1. SEE SHEET 11 OF 12 FOR HOLD DOWN FORCES.
2. SEE SHEET 12 OF 12 FOR NOTES.

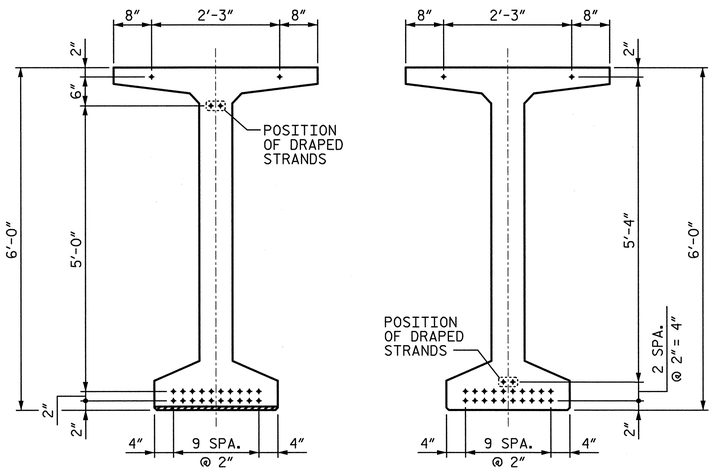

AT END OF GIRDER AT ℄ OF GIRDER

TYPE 1

UNIT A, SPAN 1, GDRS 1-6
UNIT B, SPAN 4, GDRS 5-7
UNIT B, SPAN 5, GDRS 4-6

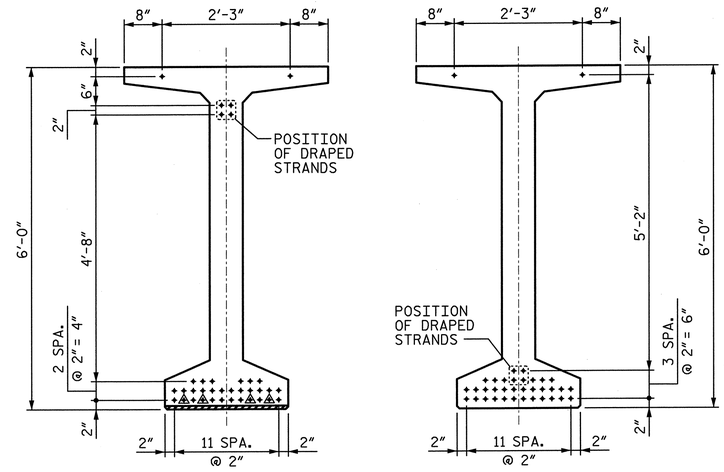

AT END OF GIRDER AT ℄ OF GIRDER

TYPE 2

UNIT B, SPAN 4, GDRS 2-4
UNIT B, SPAN 5, GDRS 1-3
UNIT C, SPAN 8, GDRS 5-6

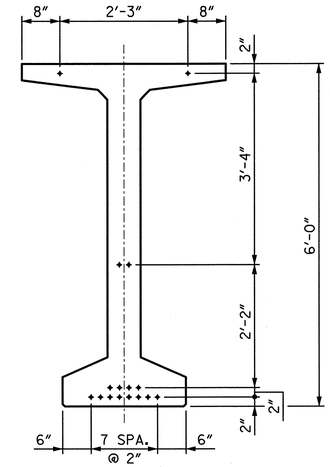

TYPE 3

UNIT C, SPAN 7, GDRS 1-2

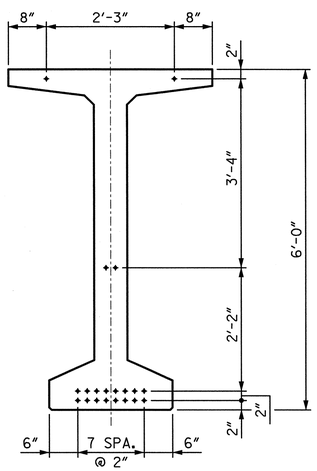

TYPE 4

UNIT B, SPAN 5, GDR 7
UNIT C, SPAN 7, GDRS 3-5
UNIT C, SPAN 8 GDRS 1-2

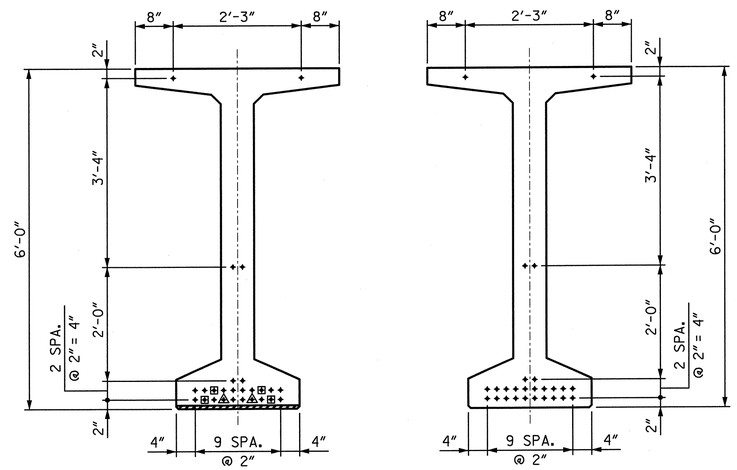

AT END OF GIRDER AT ℄ OF GIRDER

TYPE 5

UNIT C, SPAN 7, GDRS 6-7
UNIT C, SPAN 8 GDRS 3-4

DEBONDING LEGEND

- • FULLY BONDED STRANDS
- ◬ STRANDS DEBONDED FOR 4′-0″ FROM END OF GIRDER.
- ⊡ STRANDS DEBONDED FOR 10′-0″ FROM END OF GIRDER.

0.6″ Ø LOW RELAXATION STRAND LAYOUT

PROJECT NO. U-2524C
GUILFORD COUNTY
STATION: POT 407+73.35 -L-
= POT 29+32.06 -Y4-

SHEET 6 OF 12

STATE OF NORTH CAROLINA
DEPARTMENT OF TRANSPORTATION
RALEIGH

NORTH CAROLINA PROFESSIONAL SEAL 28479 ENGINEER KEVIN G. BAILEY
5-30-13

PRESTRESSED CONCRETE MODIFIED 72″ BULB TEE GIRDER STRAND PATTERNS

-LEFT LANE-

REVISIONS							SHEET NO.
NO.	BY:	DATE:	NO.	BY:	DATE:		S-105
1			3				TOTAL SHEETS
2			4				836

STV / Ralph Whitehead Associates, Inc.
1000 West Morehead St., Ste. 200
Charlotte, NC 28208
NC License No. F-0991

DRAWN BY : VMW	DATE : 12-12	DESIGN ENGINEER OF RECORD: T. TOWNSEND	DATE : 5-13
CHECKED BY : TJT	DATE : 12-12		

5/30/2013 4:55:11 PM R:\ustation\Finals\PCMBT 6 of 12.dgn

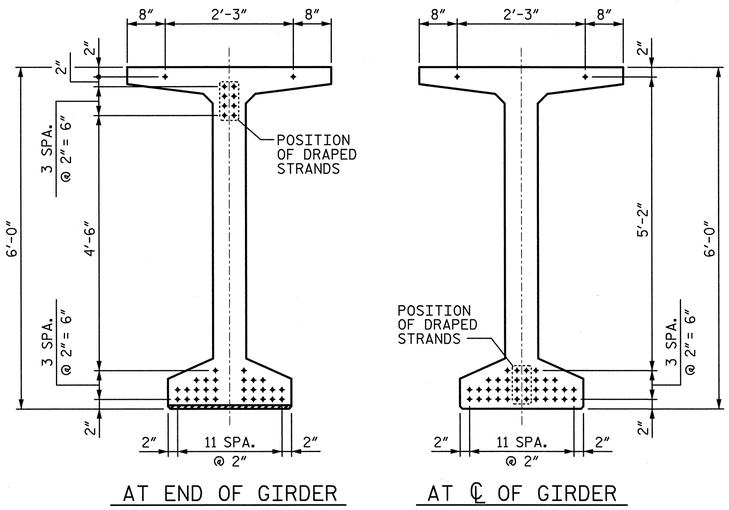

TYPE 6

UNIT I, SPANS 27-30, GDRS 1-6

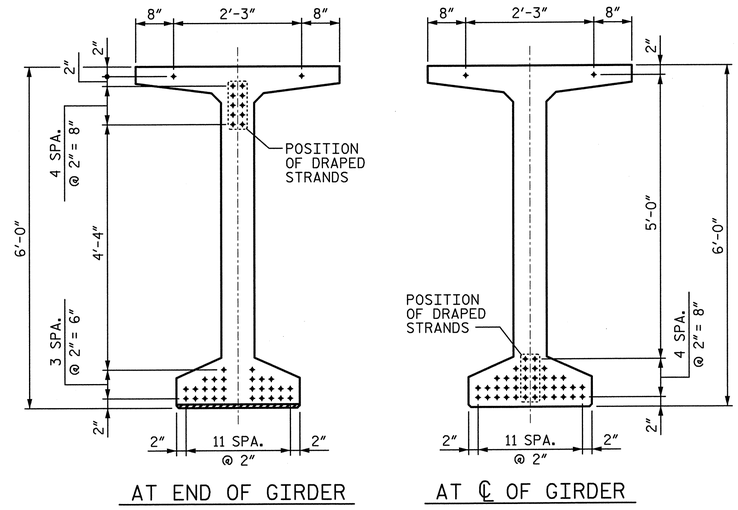

TYPE 7

UNIT B, SPAN 3, GDRS 1-7
SPAN 15, GDRS 1-8
SPAN 16, GDRS 1-10

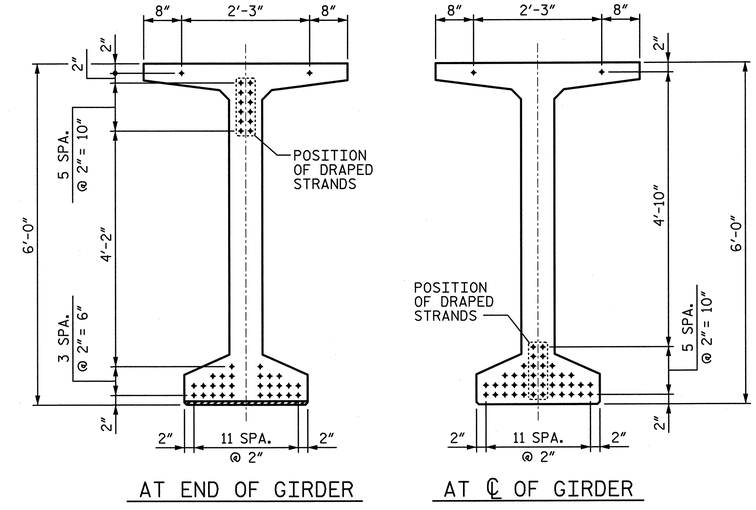

TYPE 8

UNIT A, SPAN 2, GDRS 1-6
UNIT B, SPAN 4, GDR 1
UNIT C, SPAN 8, GDR 7

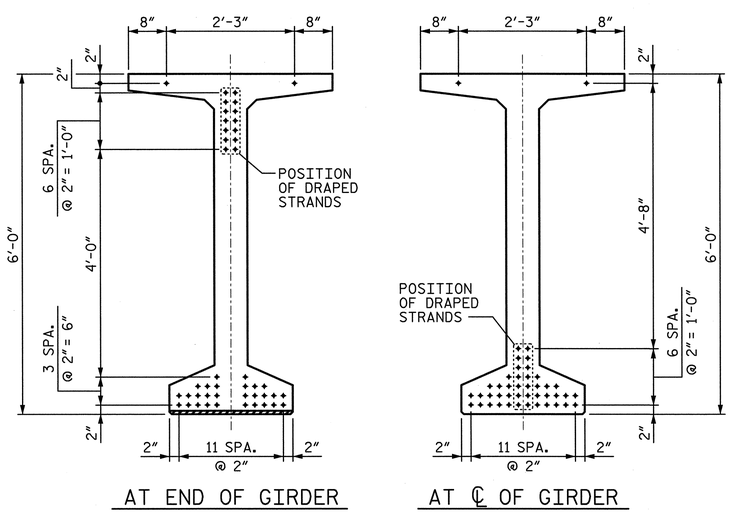

TYPE 9

UNIT F, SPANS 17-20, GDRS 1-6

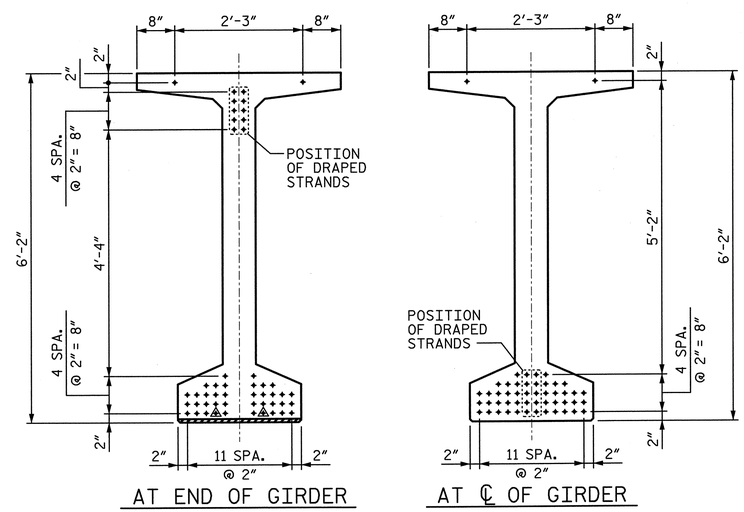

TYPE 10

UNIT D, SPANS 9-11, GDRS 1-7
UNIT E, SPANS 12-14, GDRS 1-7

0.6″ Ø LOW RELAXATION STRAND LAYOUT

DEBONDING LEGEND

- • FULLY BONDED STRANDS
- ⚠ STRANDS DEBONDED FOR 4′-0″ FROM END OF GIRDER.

NOTES:

1. SEE SHEET 11 OF 12 FOR HOLD DOWN FORCES.
2. SEE SHEET 12 OF 12 FOR NOTES.

PROJECT NO. U-2524C
GUILFORD COUNTY
STATION: POT 407+73.35 -L-
= POT 29+32.06 -Y4-

SHEET 7 OF 12

STATE OF NORTH CAROLINA
DEPARTMENT OF TRANSPORTATION
RALEIGH

NORTH CAROLINA PROFESSIONAL SEAL 28479 ENGINEER KEVIN G. BAILEY 5-30-13

PRESTRESSED CONCRETE MODIFIED 72″/74″ BULB TEE GIRDER STRAND PATTERNS

-LEFT LANE-

DRAWN BY : VMW	DATE : 12-12	DESIGN ENGINEER OF RECORD: T. TOWNSEND	DATE : 5-13
CHECKED BY : TJT	DATE : 12-12		

STV / Ralph Whitehead Associates, Inc.
1000 West Morehead St., Ste. 200
Charlotte, NC 28208
NC License No. F-0991

REVISIONS								SHEET NO.
NO.	BY:	DATE:	NO.	BY:	DATE:			S-106
1			3					TOTAL SHEETS
2			4					836

R:\ustation\Finals\PCMBT 7 of 12.dgn 4:55:16 PM 5/30/2013

UNIT	SPAN	GIRDER	CASE	"M"	"N"	"O"	"P"	"S"	"T"	"U"
A	1	1-1 TO 1-6	1	0"	-	-	-	2'-5 3/4"	1'-2"	1'-3"
	2	2-1 TO 2-6	2	17'-9"	17'-9"	-	-	2'-5 3/4"	1'-2"	1'-3"
B	3	3-1 TO 3-7	2	19'-0"	19'-0"	-	-	1'-9 3/4"	1'-10"	1'-3"
	4	4-1	2	19'-6 15/16"	19'-6 15/16"	-	-	2'-4 3/4"	1'-3"	1'-3"
		4-2	2	18'-7 1/4"	18'-7 1/4"	-	-	2'-4 3/4"	1'-3"	1'-3"
		4-3	2	17'-7 5/8"	17'-7 5/8"	-	-	2'-4 3/4"	1'-3"	1'-3"
		4-4	4	16'-8 1/16"	16'-8 1/16"	0"	-	2'-4 3/4"	1'-3"	1'-3"
		4-5 TO 4-7	1	0"	-	-	-	1'-9 3/4"	1'-10"	1'-3"
	5	5-1	2	22'-9 3/16"	13'-3 1/8"	-	-	1'-9 3/4"	1'-10"	1'-3"
		5-2	4	13'-3 1/8"	22'-9 3/16"	-4'-8 7/16"	-	1'-9 3/4"	1'-10"	1'-3"
		5-3	3	4'-7 7/8"	4'-8 7/16"	-	-	1'-9 3/4"	1'-10"	1'-3"
		5-4	3	4'-7 5/16"	4'-7 7/8"	-	-	1'-9 3/4"	1'-10"	1'-3"
		5-5	3	4'-6 3/4"	4'-7 5/16"	-	-	1'-9 3/4"	1'-10"	1'-3"
		5-6	3	4'-6 1/8"	4'-6 3/4"	-	-	1'-9 3/4"	1'-10"	1'-3"
		5-7	1	+4'-6 1/8"	-	-	-	1'-9 3/4"	1'-10"	1'-3"
C	7	7-1	1	-5'-7 1/16"	-	-	-	2'-4 3/4"	1'-3"	1'-3"
		7-2	3	5'-6 3/8"	5'-7 1/16"	-	-	2'-4 3/4"	1'-3"	1'-3"
		7-3	3	5'-5 3/4"	5'-6 3/8"	-	-	2'-4 3/4"	1'-3"	1'-3"
		7-4	3	5'-5 1/8"	5'-5 3/4"	-	-	2'-4 3/4"	1'-3"	1'-3"
		7-5	3	5'-4 1/2"	5'-5 1/8"	-	-	2'-4 3/4"	1'-3"	1'-3"
		7-6	3	5'-3 7/8"	5'-4 1/2"	-	-	2'-4 3/4"	1'-3"	1'-3"
		7-7	1	+5'-3 7/8"	-	-	-	2'-4 3/4"	1'-3"	1'-3"
	8	8-1	1	-2'-1 5/16"	-	-	-	2'-4 3/4"	1'-3"	1'-3"
		8-2	3	2'-1 1/8"	2'-1 5/16"	-	-	2'-4 3/4"	1'-3"	1'-3"
		8-3	3	2'-0 15/16"	2'-1 1/8"	-	-	2'-4 3/4"	1'-3"	1'-3"
		8-4	3	2'-0 3/4"	2'-0 15/16"	-	-	2'-4 3/4"	1'-3"	1'-3"
		8-5	4	17'-0"	12'-11 3/8"	+2'-0 3/4"	-	2'-4 3/4"	1'-3"	1'-3"
		8-6	5	17'-0"	17'-0"	12'-10 13/16"	12'-11 3/8"	2'-4 3/4"	1'-3"	1'-3"
		8-7	2	12'-11 1/8"	17'-0"	-	-	2'-4 3/4"	1'-3"	1'-3"
D	9	9-1 TO 9-8	2	21'-6"	21'-6"	-	-	2'-7 3/4"	1'-2"	1'-3"
	10	10-1 TO 10-8	2	21'-6"	21'-6"	-	-	2'-7 3/4"	1'-2"	1'-3"
	11	11-1 TO 11-8	2	21'-6"	21'-6"	-	-	2'-7 3/4"	1'-2"	1'-3"
E	12	12-1 TO 12-7	2	21'-6"	21'-6"	-	-	2'-7 3/4"	1'-2"	1'-3"
	13	13-1 TO 13-7	2	21'-6"	21'-6"	-	-	2'-7 3/4"	1'-2"	1'-3"
	14	14-1 TO 14-7	2	21'-6"	21'-6"	-	-	2'-7 3/4"	1'-2"	1'-3"
I	15	15-1	2	20'-0 3/4"	20'-0 3/4"	-	-	2'-7 3/4"	1'-0"	1'-3"
		15-2	2	20'-0 9/16"	20'-0 9/16"	-	-	2'-7 3/4"	1'-0"	1'-3"
		15-3	2	20'-0 7/16"	20'-0 7/16"	-	-	2'-7 3/4"	1'-0"	1'-3"
		15-4	2	20'-0 5/16"	20'-0 5/16"	-	-	2'-7 3/4"	1'-0"	1'-3"
		15-5	2	20'-0 3/16"	20'-0 3/16"	-	-	2'-7 3/4"	1'-0"	1'-3"
		15-6	2	20'-0 1/16"	20'-0 1/16"	-	-	2'-7 3/4"	1'-0"	1'-3"
		15-7	2	20'-0 1/16"	20'-0 1/16"	-	-	2'-7 3/4"	1'-0"	1'-3"
		15-8	2	20'-0"	20'-0"	-	-	2'-7 3/4"	1'-0"	1'-3"
	16	16-1	2	20'-0 5/16"	20'-0 5/16"	-	-	2'-7 3/4"	1'-0"	1'-3"
		16-2	2	20'-0 1/16"	20'-0 1/16"	-	-	2'-7 3/4"	1'-0"	1'-3"
		16-3	2	20'-0"	20'-0"	-	-	2'-7 3/4"	1'-0"	1'-3"
		16-4	2	20'-0 1/16"	20'-0 1/16"	-	-	2'-7 3/4"	1'-0"	1'-3"
		16-5	2	20'-0 1/4"	20'-0 1/4"	-	-	2'-7 3/4"	1'-0"	1'-3"
		16-6	2	20'-0 1/16"	20'-0 1/16"	-	-	2'-7 3/4"	1'-0"	1'-3"
		16-7 TO 16-10	2	20'-0"	20'-0"	-	-	2'-7 3/4"	1'-0"	1'-3"
F	17	17-1 TO 17-6	2	19'-7 1/2"	19'-7 1/2"	-	-	2'-5 3/4"	1'-2"	1'-3"
	18	18-1 TO 18-6	2	19'-7 1/2"	19'-7 1/2"	-	-	2'-5 3/4"	1'-2"	1'-3"
	19	19-1 TO 19-6	2	19'-7 1/2"	19'-7 1/2"	-	-	2'-5 3/4"	1'-2"	1'-3"
	20	20-1 TO 20-6	2	19'-7 1/2"	19'-7 1/2"	-	-	2'-5 3/4"	1'-2"	1'-3"
I	27	27-1	2	21'-0 1/2"	14'-4"	-	-	2'-7 3/4"	1'-0"	1'-3"
		27-2	5	21'-0 1/16"	21'-0 1/8"	14'-4"	14'-4"	2'-7 3/4"	1'-0"	1'-3"
		27-3	5	21'-1 7/16"	21'-0 5/8"	14'-4"	14'-4"	2'-7 3/4"	1'-0"	1'-3"
		27-4	5	21'-1 15/16"	21'-1 1/16"	14'-4"	14'-4"	2'-7 3/4"	1'-0"	1'-3"
		27-5	5	21'-2 7/16"	21'-1 9/16"	14'-4"	14'-4"	2'-7 3/4"	1'-0"	1'-3"
		27-6	2	14'-4"	21'-2 1/16"	-	-	2'-7 3/4"	1'-0"	1'-3"
	28	28-1	2	19'-5 1/4"	13'-4"	-	-	2'-7 3/4"	1'-0"	1'-3"
		28-2	5	19'-5 11/16"	19'-4 15/16"	13'-4"	13'-4"	2'-7 3/4"	1'-0"	1'-3"
		28-3	5	19'-6 1/8"	19'-5 3/8"	13'-4"	13'-4"	2'-7 3/4"	1'-0"	1'-3"
		28-4	5	19'-6 1/2"	19'-5 13/16"	13'-4"	13'-4"	2'-7 3/4"	1'-0"	1'-3"
		28-5	5	19'-6 15/16"	19'-6 3/16"	13'-4"	13'-4"	2'-7 3/4"	1'-0"	1'-3"
		28-6	2	13'-4"	19'-6 5/8"	-	-	2'-7 3/4"	1'-0"	1'-3"
	29	29-1	2	21'-2 1/4"	15'-8"	-	-	2'-7 3/4"	1'-0"	1'-3"
		29-2	5	21'-2 5/8"	21'-2"	15'-8"	15'-8"	2'-7 3/4"	1'-0"	1'-3"
		29-3	5	21'-3"	21'-2 5/16"	15'-8"	15'-8"	2'-7 3/4"	1'-0"	1'-3"
		29-4	5	21'-3 3/8"	21'-2 11/16"	15'-8"	15'-8"	2'-7 3/4"	1'-0"	1'-3"
		29-5	5	21'-3 3/4"	21'-3 1/16"	15'-8"	15'-8"	2'-7 3/4"	1'-0"	1'-3"
		29-6	2	15'-8"	21'-3 7/16"	-	-	2'-7 3/4"	1'-0"	1'-3"
	30	30-1	2	21'-1 1/8"	16'-2"	-	-	2'-7 3/4"	1'-0"	1'-3"
		30-2	5	21'-1 7/16"	21'-0 7/8"	16'-2"	16'-2"	2'-7 3/4"	1'-0"	1'-3"
		30-3	5	21'-1 3/4"	21'-1 3/16"	16'-2"	16'-2"	2'-7 3/4"	1'-0"	1'-3"
		30-4	5	21'-2 1/16"	21'-1 1/2"	16'-2"	16'-2"	2'-7 3/4"	1'-0"	1'-3"
		30-5	5	21'-2 3/8"	21'-1 13/16"	16'-2"	16'-2"	2'-7 3/4"	1'-0"	1'-3"
		30-6	2	16'-2"	21'-2 5/8"	-		2'-7 3/4"	1'-0"	1'-3"

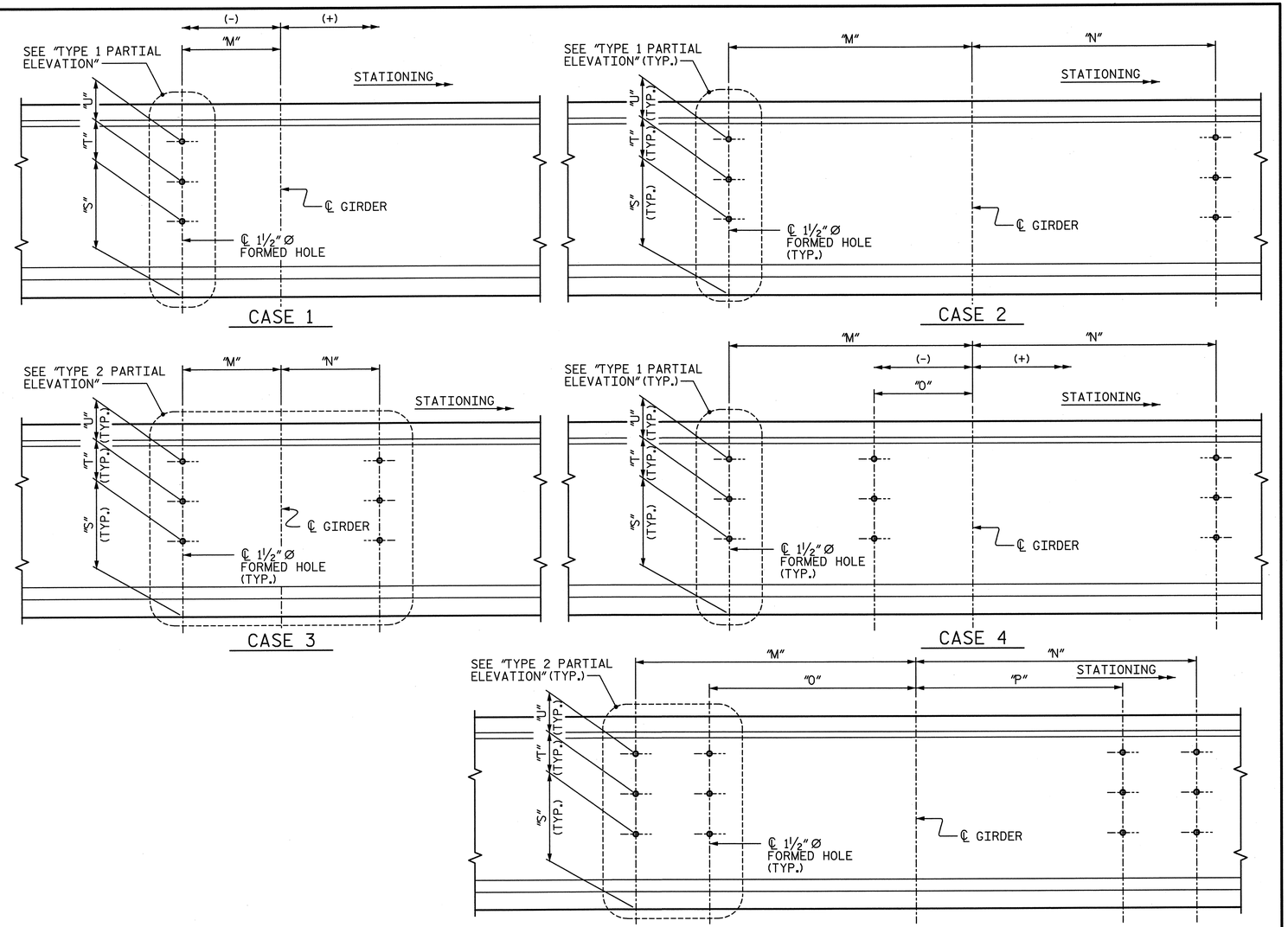

DIAPHRAGM LOCATION

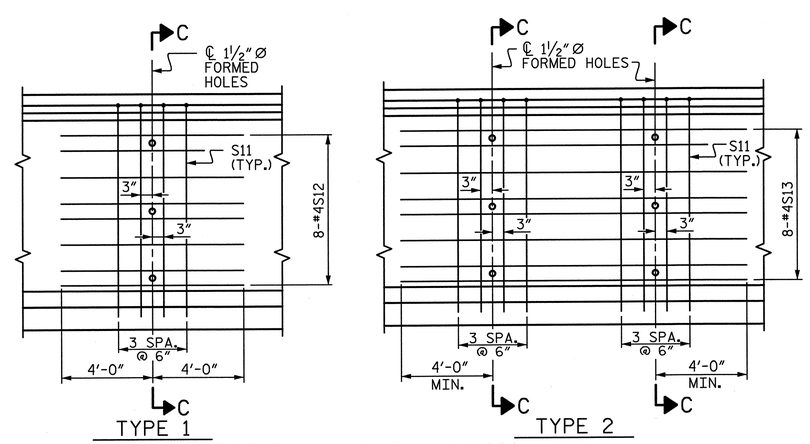

PARTIAL ELEVATION

FOR SECTION C-C, SEE CORRESPONDING SHEETS 1 THROUGH 5 OF 12

PROJECT NO. U-2524C

GUILFORD COUNTY

STATION: POT 407+73.35 -L-
= POT 29+32.06 -Y4-

SHEET 8 OF 12

STATE OF NORTH CAROLINA
DEPARTMENT OF TRANSPORTATION
RALEIGH

PRESTRESSED CONCRETE MODIFIED BULB TEE GIRDER DIAPHRAGM DETAILS

-LEFT LANE-

NORTH CAROLINA PROFESSIONAL SEAL 28479 ENGINEER KEVIN G. BAILEY 5-30-13

STV/ Ralph Whitehead Associates, Inc.
1000 West Morehead St., Ste. 200
Charlotte, NC 28208
NC License No. F-0991

REVISIONS						SHEET NO.
NO.	BY:	DATE:	NO.	BY:	DATE:	S-107
1			3			TOTAL SHEETS
2			4			836

DRAWN BY : VMW DATE : 12-12
CHECKED BY : TJT DATE : 12-12

DESIGN ENGINEER OF RECORD: T. TOWNSEND DATE : 5-13

5/30/2013 4:55:20 PM R:\ustation\Finals\PCMBT 8 of 12.dgn

GIRDER TABLE

UNIT	SPAN	GDR.	STRAND LAYOUT TYPE	* GDR. SHT.	"A"	"B"	"C"	"D"	"E"	"F"	"G"	S1 BARS NO.	S1 BARS SIZE	S1 BARS LENGTH	S1 BARS WEIGHT (LBS)	S2 BARS LENGTH	S2 BARS WEIGHT (LBS)	S6 BARS NO.	S6 BARS LENGTH	S6 BARS WEIGHT (LBS)	S9 BARS NO.	S9 BARS WEIGHT (LBS)	S11 BARS NO.	S11 BARS WEIGHT (LBS)	S12 BARS NO.	S12 BARS WEIGHT (LBS)	S13 BARS NO.	S13 BARS LENGTH	S13 BARS WEIGHT (LBS)	REINF. STEEL (LBS)	CONCRETE f'c (KSI)	CONCRETE f'ci (KSI)	CONCRETE C.Y.	0.6"Ø L.R. STRANDS NO.	NO. OF GDRS.	TOTAL LENGTH
A	1	1-1	1	1	87'-9 1/8"	43'-10 15/16"	5	37	8 1/2"	6'-4 1/2"	10"	160	#4	7'-0 1/2"	753	7'-0 1/2"	423	100	4'-6 1/2"	474	50	169	4	49	8	43	-	-	-	2,272	8.0	6.4	18.8	24	1	87'-9 1/8"
		1-2	1	1	88'-1 1/8"	44'-0 15/16"	5	37	8 1/2"	6'-4 1/2"	10"	160	#4	7'-0 1/2"	753	7'-0 1/2"	423	100	4'-6 1/2"	474	50	169	4	49	8	43	-	-	-	2,272	8.0	6.4	18.9	24	1	88'-1 1/8"
		1-3	1	1	88'-5 3/4"	44'-2 7/8"	5	37	8 1/2"	6'-4 1/2"	10"	160	#4	7'-0 1/2"	753	7'-0 1/2"	423	100	4'-6 1/2"	474	50	169	4	49	8	43	-	-	-	2,272	8.0	6.4	19.0	24	1	88'-5 3/4"
		1-4	1	1	88'-9 3/4"	44'-4 7/8"	5	37	8 1/2"	6'-4 1/2"	10"	160	#4	7'-0 1/2"	753	7'-0 1/2"	423	100	4'-6 1/2"	474	50	169	4	49	8	43	-	-	-	2,272	8.0	6.4	19.0	24	1	88'-9 3/4"
		1-5	1	1	89'-1 5/8"	44'-6 13/16"	5	37	8 1/2"	6'-4 1/2"	10"	160	#4	7'-0 1/2"	753	7'-0 1/2"	423	100	4'-6 1/2"	474	50	169	4	49	8	43	-	-	-	2,272	8.0	6.4	19.1	24	1	89'-1 5/8"
		1-6	1	1	89'-5 5/8"	44'-8 13/16"	5	37	8 1/2"	6'-4 1/2"	10"	160	#4	7'-0 1/2"	753	7'-0 1/2"	423	100	4'-6 1/2"	474	50	169	4	49	8	43	-	-	-	2,272	8.0	6.4	19.2	24	1	89'-5 5/8"
	2	2-1	8	1	115'-10 1/2"	57'-11 1/4"	20	36	7"	6'-3"	8 1/2"	218	#4	6'-11"	1,007	6'-11"	416	100	4'-5"	461	79	268	8	97	16	86	-	-	-	2,696	8.5	6.8	24.8	42	1	115'-10 1/2"
		2-2	8	1	116'-4 3/4"	58'-2 3/8"	20	36	7"	6'-3"	8 1/2"	218	#4	6'-11"	1,007	6'-11"	416	100	4'-5"	461	79	268	8	97	16	86	-	-	-	2,696	8.5	6.8	24.9	42	1	116'-4 3/4"
		2-3	8	1	116'-10 7/8"	58'-5 7/16"	20	36	7"	6'-3"	8 1/2"	218	#4	6'-11"	1,007	6'-11"	416	100	4'-5"	461	79	268	8	97	16	86	-	-	-	2,696	8.5	6.8	25.1	42	1	116'-10 7/8"
		2-4	8	1	117'-5 1/8"	58'-8 9/16"	20	36	7"	6'-3"	8 1/2"	218	#4	6'-11"	1,007	6'-11"	416	100	4'-5"	461	79	268	8	97	16	86	-	-	-	2,696	8.5	6.8	25.2	42	1	117'-5 1/8"
		2-5	8	1	117'-11 1/4"	58'-11 5/8"	20	36	7"	6'-3"	8 1/2"	218	#4	6'-11"	1,007	6'-11"	416	100	4'-5"	461	79	268	8	97	16	86	-	-	-	2,696	8.5	6.8	25.3	42	1	117'-11 1/4"
		2-6	8	1	118'-5 1/2"	59'-2 3/4"	20	36	7"	6'-3"	8 1/2"	218	#4	6'-11"	1,007	6'-11"	416	100	4'-5"	461	79	268	8	97	16	86	-	-	-	2,696	8.5	6.8	25.4	42	1	118'-5 1/2"
B	3	3-1	7	1	115'-10"	57'-11"	25	28	7"	6'-3"	8 1/2"	222	#4	6'-11"	1,026	6'-11"	416	100	4'-5"	461	81	275	8	97	16	86	-	-	-	2,722	8.0	6.4	24.8	40	1	115'-10"
		3-2	7	1	116'-3 1/8"	58'-1 9/16"	25	28	7"	6'-3"	8 1/2"	222	#4	6'-11"	1,026	6'-11"	416	100	4'-5"	461	81	275	8	97	16	86	-	-	-	2,722	8.0	6.4	24.9	40	1	116'-3 1/8"
		3-3	7	1	116'-8 1/4"	58'-4 1/8"	25	28	7"	6'-3"	8 1/2"	222	#4	6'-11"	1,026	6'-11"	416	100	4'-5"	461	81	275	8	97	16	86	-	-	-	2,722	8.0	6.4	25.0	40	1	116'-8 1/4"
		3-4	7	1	117'-1 1/2"	58'-6 3/4"	25	29	7"	6'-3"	8 1/2"	224	#4	6'-11"	1,035	6'-11"	416	100	4'-5"	461	82	278	8	97	16	86	-	-	-	2,734	8.0	6.4	25.1	40	1	117'-1 1/2"
		3-5	7	1	117'-6 7/8"	58'-9 7/16"	25	29	7"	6'-3"	8 1/2"	224	#4	6'-11"	1,035	6'-11"	416	100	4'-5"	461	82	278	8	97	16	86	-	-	-	2,734	8.0	6.4	25.2	40	1	117'-6 7/8"
		3-6	7	1	118'-0 1/8"	59'-0 1/16"	25	29	7"	6'-3"	8 1/2"	224	#4	6'-11"	1,035	6'-11"	416	100	4'-5"	461	82	278	8	97	16	86	-	-	-	2,734	8.0	6.4	25.3	40	1	118'-0 1/8"
		3-7	7	1	118'-5 5/8"	59'-2 13/16"	25	30	7"	6'-3"	8 1/2"	226	#4	6'-11"	1,044	6'-11"	416	100	4'-5"	461	83	281	8	97	16	86	-	-	-	2,746	8.0	6.4	25.4	40	1	118'-5 5/8"
	4	4-1	8	2	117'-5 5/8"	58'-8 13/16"	25	29	7"	6'-3"	8 1/2"	224	#4	6'-11"	1,035	6'-11"	416	100	4'-5"	461	82	278	8	97	16	86	-	-	-	2,776	8.5	6.8	25.2	42	1	117'-5 5/8"
		4-2	2	2	111'-7 5/8"	55'-9 13/16"	8	48	7"	6'-3"	8 1/2"	194	#4	6'-11"	896	6'-11"	416	100	4'-5"	461	67	227	8	97	16	86	-	-	-	2,586	8.0	6.4	23.9	36	1	111'-7 5/8"
		4-3	2	2	105'-9 7/8"	52'-10 15/16"	8	44	7"	6'-3"	8 1/2"	186	#4	6'-11"	859	6'-11"	416	100	4'-5"	461	63	214	8	97	16	86	-	-	-	2,536	8.0	6.4	22.7	36	1	105'-9 7/8"
		4-4	2	2	100'-0 3/8"	50'-0 3/16"	8	40	7"	6'-3"	8 1/2"	178	#4	6'-11"	822	6'-11"	416	100	4'-5"	461	59	200	12	146	24	128	-	-	-	2,576	8.0	6.4	21.4	36	1	100'-0 3/8"
		4-5	1	2	94'-3 1/8"	47'-1 9/16"	20	20	7"	6'-3"	8 1/2"	186	#4	6'-11"	859	6'-11"	416	100	4'-5"	461	63	214	4	49	8	43	-	-	-	2,445	8.0	6.4	20.2	24	1	94'-3 1/8"
		4-6	1	2	88'-6"	44'-3"	20	16	7"	6'-3"	8 1/2"	178	#4	6'-11"	822	6'-11"	416	100	4'-5"	461	59	200	4	49	8	43	-	-	-	2,394	8.0	6.4	19.0	24	1	88'-6"
		4-7	1	2	82'-9 1/4"	41'-4 5/8"	20	12	7"	6'-3"	8 1/2"	170	#4	6'-11"	785	6'-11"	416	100	4'-5"	461	55	186	4	49	8	43	-	-	-	2,343	8.0	6.4	17.7	24	1	82'-9 1/4"
	5	5-1	2	1	111'-0 1/8"	55'-6 1/16"	8	47	7"	6'-3"	8 1/2"	192	#4	6'-11"	887	6'-11"	416	100	4'-5"	461	66	224	8	97	16	86	-	-	-	2,532	8.0	6.4	23.8	36	1	111'-0 1/8"
		5-2	2	1	105'-1 5/8"	52'-6 13/16"	8	43	7"	6'-3"	8 1/2"	184	#4	6'-11"	850	6'-11"	416	100	4'-5"	461	62	210	12	146	24	128	-	-	-	2,572	8.0	6.4	22.5	36	1	105'-1 5/8"
		5-3	2	1	99'-4"	49'-8"	8	39	7"	6'-3"	8 1/2"	176	#4	6'-11"	813	6'-11"	416	100	4'-5"	461	58	197	8	97	-	-	8	17'-5"	93	2,438	8.0	6.4	21.3	36	1	99'-4"
		5-4	1	1	93'-7 1/4"	46'-9 5/8"	20	20	7"	6'-3"	8 1/2"	186	#4	6'-11"	859	6'-11"	416	100	4'-5"	461	63	214	8	97	-	-	8	17'-4"	93	2,501	8.0	6.4	20.1	24	1	93'-7 1/4"
		5-5	1	1	87'-11"	43'-11 1/2"	20	16	7"	6'-3"	8 1/2"	178	#4	6'-11"	822	6'-11"	416	100	4'-5"	461	59	200	8	97	-	-	8	17'-3"	92	2,449	8.0	6.4	18.8	24	1	87'-11"
		5-6	1	1	82'-3 5/8"	41'-1 13/16"	20	12	7"	6'-3"	8 1/2"	170	#4	6'-11"	785	6'-11"	416	100	4'-5"	461	55	186	8	97	-	-	8	17'-1"	91	2,397	8.0	6.4	17.6	24	1	82'-3 5/8"
		5-7	4	1	76'-8 7/8"	38'-4 7/16"	8	24	7"	6'-3"	8 1/2"	146	#4	6'-11"	675	6'-11"	416	100	4'-5"	461	43	146	4	49	8	43	-	-	-	2,151	8.0	6.4	16.4	20	1	76'-8 7/8"
C	7	7-1	3	1	58'-6 1/4"	29'-3 1/8"	10	9	7"	6'-3"	8 1/2"	124	#4	6'-11"	573	6'-11"	416	100	4'-5"	461	32	108	4	49	8	43	-	-	-	2,011	8.0	6.4	12.5	16	1	58'-6 1/4"
		7-2	3	1	64'-3 3/8"	32'-1 11/16"	10	13	7"	6'-3"	8 1/2"	132	#4	6'-11"	610	6'-11"	416	100	4'-5"	461	36	122	8	97	-	-	8	19'-2"	102	2,169	8.0	6.4	13.8	16	1	64'-3 3/8"
		7-3	4	1	69'-11 5/8"	34'-11 13/16"	8	20	7"	6'-3"	8 1/2"	138	#5	6'-11"	996	6'-11"	416	100	4'-5"	461	39	132	8	97	-	-	8	19'-1"	102	2,565	8.0	6.4	15.0	20	1	69'-11 5/8"
		7-4	4	1	75'-6 7/8"	37'-9 7/16"	8	24	7"	6'-3"	8 1/2"	146	#5	6'-11"	1,053	6'-11"	416	100	4'-5"	461	43	146	8	97	-	-	8	18'-11"	101	2,635	8.0	6.4	16.2	20	1	75'-6 7/8"
		7-5	4	1	81'-1 3/8"	40'-6 11/16"	8	27	7"	6'-3"	8 1/2"	152	#5	6'-11"	1,097	6'-11"	416	100	4'-5"	461	46	156	8	97	-	-	8	18'-10"	101	2,689	8.0	6.4	17.4	20	1	81'-1 3/8"
		7-6	5	1	86'-7 1/8"	43'-3 9/16"	8	31	7"	6'-3"	8 1/2"	160	#5	6'-11"	1,154	6'-11"	416	100	4'-5"	461	50	169	8	97	-	-	8	18'-9"	100	2,758	8.0	6.4	18.6	26	1	86'-7 1/8"
		7-7	5	1	92'-0"	46'-0"	8	35	7"	6'-3"	8 1/2"	168	#5	6'-11"	1,212	6'-11"	416	100	4'-5"	461	54	183	4	49	8	43	-	-	-	2,725	8.0	6.4	19.7	26	1	92'-0"
	8	8-1	4	1	67'-0 3/8"	33'-6 3/16"	8	18	7"	6'-3"	8 1/2"	134	#5	6'-11"	967	6'-11"	416	100	4'-5"	461	37	125	4	49	8	43	-	-	-	2,422	8.0	6.4	14.4	20	1	67'-0 3/8"
		8-2	4	1	75'-9 3/8"	37'-10 11/16"	8	24	7"	6'-3"	8 1/2"	146	#5	6'-11"	1,053	6'-11"	416	100	4'-5"	461	43	146	8	97	-	-	8	12'-3"	65	2,599	8.0	6.4	16.2	20	1	75'-9 3/8"
		8-3	5	1	84'-6"	42'-3"	8	30	7"	6'-3"	8 1/2"	158	#5	6'-11"	1,140	6'-11"	416	100	4'-5"	461	49	166	8	97	-	-	8	12'-3"	65	2,706	8.0	6.4	18.1	26	1	84'-6"
		8-4	5	1	93'-2 1/2"	46'-7 1/4"	8	35	7"	6'-3"	8 1/2"	168	#5	6'-11"	1,212	6'-11"	416	100	4'-5"	461	54	183	8	97	-	-	8	12'-2"	65	2,795	8.0	6.4	20.0	26	1	93'-2 1/2"
		8-5	2	1	101'-10 5/8"	50'-11 5/16"	8	41	7"	6'-3"	8 1/2"	180	#5	6'-11"	1,299	6'-11"	416	100	4'-5"	461	60	203	12	146	24	128	-	-	-	3,014	8.0	6.4	21.8	36	1	101'-10 5/8"
		8-6	2	1	110'-6 1/2"	55'-3 1/4"	8	47	7"	6'-3"	8 1/2"	192	#5	6'-11"	1,385	6'-11"	416	100	4'-5"	461	66	224	16	195	-	-	16	12'-2"	130	3,172	8.0	6.4	23.7	36	1	110'-6 1/2"
		8-7	8	1	119'-2 1/4"	59'-7 1/8"	8	53	7"	6'-3"	8 1/2"	204	#5	6'-11"	1,472	6'-11"	416	100	4'-5"	461	72	244	8	97	16	86	-	-	-	3,137	8.5	6.8	25.5	42	1	119'-2 1/4"
D	9	9-1	10	4	124'-1 3/8"	62'-0 11/16"	10	56	9"	6'-7"	10 1/2"	218	#4	7'-3"	1,056	7'-3"	436	100	4'-7"	478	79	268	8	100	16	86	-	-	-	2,797	9.0	7.2	28.3	50	1	124'-1 3/8"
		9-2	10	4	124'-7 1/8"	62'-3 9/16"	10	56	9"	6'-7"	10 1/2"	218	#4	7'-3"	1,056	7'-3"	436	100	4'-7"	478	79	268	8	100	16	86	-	-	-	2,797	9.0	7.2	28.4	50	1	124'-7 1/8"
		9-3	10	4	125'-0 7/8"	62'-6 7/16"	10	56	9"	6'-7"	10 1/2"	218	#4	7'-3"	1,056	7'-3"	436	100	4'-7"	478	79	268	8	100	16	86	-	-	-	2,797	9.0	7.2	28.5	50	1	125'-0 7/8"
		9-4	10	4	125'-6 5/8"	62'-9 5/16"	10	56	9"	6'-7"	10 1/2"	218	#4	7'-3"	1,056	7'-3"	436	100	4'-7"	478	79	268	8	100	16	86	-	-	-	2,797	9.0	7.2	28.6	50	1	125'-6 5/8"
		9-5	10	4	126'-0 3/8"	63'-0 3/16"	10	56	9"	6'-7"	10 1/2"	218	#4	7'-3"	1,056	7'-3"	436	100	4'-7"	478	79	268	8	100	16	86	-	-	-	2,797	9.0	7.2	28.7	50	1	126'-0 3/8"
		9-6	10	4	126'-6 1/4"	63'-3 1/8"	10	56	9"	6'-7"	10 1/2"	218	#4	7'-3"	1,056	7'-3"	436	100	4'-7"	478	79	268	8	100	16	86	-	-	-	2,797	9.0	7.2	28.8	50	1	126'-6 1/4"
		9-7	10	4	127'-0"	63'-6"	10	56	9"	6'-7"	10 1/2"	218	#4	7'-3"	1,056	7'-3"	436	100	4'-7"	478	79	268	8	100	16	86	-	-	-	2,797	9.0	7.2	28.9	50	1	127'-0"
		9-8	10	4	127'-5 3/4"	63'-8 7/8"	10	56	9"	6'-7"	10 1/2"	218	#4	7'-3"	1,056	7'-3"	436	100	4'-7"	478	79	268	8	100	16	86	-	-	-	2,797	9.0	7.2	29.0	50	1	127'-5 3/4"

* GDR. SHT. REFERS TO GIRDER PLAN AND ELEVATION SHEETS 1 OF 12, 2 OF 12, 3 OF 12, 4 OF 12, AND 5 OF 12.

NOTE: REINF. STEEL SHOWN IS TOTAL REINFORCING STEEL FOR GIRDER INDICATED.

PROJECT NO. U-2524C
GUILFORD COUNTY
STATION: POT 407+73.35 -L-
= POT 29+32.06 -Y4-

SHEET 9 OF 12

STATE OF NORTH CAROLINA
DEPARTMENT OF TRANSPORTATION
RALEIGH

PRESTRESSED CONCRETE
MODIFIED BULB TEE
GIRDER TABLE

-LEFT LANE-

NORTH CAROLINA PROFESSIONAL SEAL 28479 ENGINEER KEVIN G. BAILEY
5-30-13

STV/ Ralph Whitehead Associates, Inc.
1000 West Morehead St., Ste. 200
Charlotte, NC 28208
NC License No. F-0991

REVISIONS								
NO.	BY:	DATE:	NO.	BY:	DATE:	SHEET NO.
1			3			S-108
2			4			TOTAL SHEETS
						836

DRAWN BY : VMW DATE : 12-12
CHECKED BY : TJT DATE : 12-12
DESIGN ENGINEER OF RECORD: T. TOWNSEND DATE : 5-13

5/30/2013 4:55:25 PM R:\ustation\Finals\PCMBT 9 of 12.dgn

GIRDER TABLE

UNIT	SPAN	GDR.	STRAND LAYOUT TYPE	* GDR. SHT.	"A"	"B"	"C"	"D"	"E"	"F"	"G"	S1 BARS NO.	S1 BARS SIZE	S1 BARS LENGTH	S1 BARS WEIGHT (LBS)	S2 BARS LENGTH	S2 BARS WEIGHT (LBS)	S6 BARS NO.	S6 BARS LENGTH	S6 BARS WEIGHT (LBS)	S9 BARS NO.	S9 BARS WEIGHT (LBS)	S11 BARS NO.	S11 BARS WEIGHT (LBS)	S12 BARS NO.	S12 BARS WEIGHT (LBS)	S13 BARS NO.	S13 BARS LENGTH	S13 BARS WEIGHT (LBS)	REINF. STEEL (LBS)	CONCRETE f'c (KSI)	CONCRETE f'ci (KSI)	CONCRETE C.Y.	0.6"Ø L.R. STRANDS NO.	NO. OF GDRS.	TOTAL LENGTH
D	10	10-1	10	5	125'-0 1/8"	62'-6 1/16"	10	56	6 1/2"	6'-4 1/2"	8"	218	#4	7'-0 1/2"	1,025	7'-0 1/2"	423	100	4'-4 1/2"	456	79	268	8	100	16	86	-	-	-	2,773	9.0	7.2	28.5	50	1	125'-0 1/8"
		10-2	10	5	125'-4 5/8"	62'-8 5/16"	10	56	6 1/2"	6'-4 1/2"	8"	218	#4	7'-0 1/2"	1,025	7'-0 1/2"	423	100	4'-4 1/2"	456	79	268	8	100	16	86	-	-	-	2,773	9.0	7.2	28.5	50	1	125'-4 5/8"
		10-3	10	5	125'-9 1/8"	62'-10 9/16"	10	56	7 1/2"	6'-5 1/2"	9"	218	#4	7'-1 1/2"	1,038	7'-1 1/2"	428	100	4'-5 1/2"	465	79	268	8	100	16	86	-	-	-	2,800	9.0	7.2	28.6	50	1	125'-9 1/8"
		10-4	10	5	126'-1 5/8"	63'-0 13/16"	10	56	7 1/2"	6'-5 1/2"	9"	218	#4	7'-1 1/2"	1,038	7'-1 1/2"	428	100	4'-5 1/2"	465	79	268	8	100	16	86	-	-	-	2,800	9.0	7.2	28.7	50	1	126'-1 5/8"
		10-5	10	5	126'-6 1/8"	63'-3 1/16"	10	56	7 1/2"	6'-5 1/2"	9"	218	#4	7'-1 1/2"	1,038	7'-1 1/2"	428	100	4'-5 1/2"	465	79	268	8	100	16	86	-	-	-	2,800	9.0	7.2	28.8	50	1	126'-6 1/8"
		10-6	10	5	126'-10 5/8"	63'-5 5/16"	10	56	8 1/2"	6'-6 1/2"	10"	218	#4	7'-2 1/2"	1,050	7'-2 1/2"	433	100	4'-6 1/2"	474	79	268	8	100	16	86	-	-	-	2,826	9.0	7.2	28.9	50	1	126'-10 5/8"
		10-7	10	5	127'-3 1/8"	63'-7 9/16"	10	56	8 1/2"	6'-6 1/2"	10"	218	#4	7'-2 1/2"	1,050	7'-2 1/2"	433	100	4'-6 1/2"	474	79	268	8	100	16	86	-	-	-	2,826	9.0	7.2	29.0	50	1	127'-3 1/8"
		10-8	10	5	127'-7 5/8"	63'-9 13/16"	10	56	9"	6'-7"	10 1/2"	218	#4	7'-3"	1,056	7'-3"	436	100	4'-7"	478	79	268	8	100	16	86	-	-	-	2,839	9.0	7.2	29.1	50	1	127'-7 5/8"
	11	11-1	10	4	126'-1 3/8"	63'-0 11/16"	10	56	9"	6'-7"	10 1/2"	218	#4	7'-3"	1,056	7'-3"	436	90	4'-7"	430	79	268	8	100	16	86	-	-	-	2,749	9.0	7.2	28.7	50	1	126'-1 3/8"
		11-2	10	4	126'-4 3/8"	63'-2 3/16"	10	56	9"	6'-7"	10 1/2"	218	#4	7'-3"	1,056	7'-3"	436	90	4'-7"	430	79	268	8	100	16	86	-	-	-	2,749	9.0	7.2	28.8	50	1	126'-4 3/8"
		11-3	10	4	126'-7 1/4"	63'-3 5/8"	10	56	9"	6'-7"	10 1/2"	218	#4	7'-3"	1,056	7'-3"	436	90	4'-7"	430	79	268	8	100	16	86	-	-	-	2,749	9.0	7.2	28.8	50	1	126'-7 1/4"
		11-4	10	4	126'-10 1/8"	63'-5 1/16"	10	56	9"	6'-7"	10 1/2"	218	#4	7'-3"	1,056	7'-3"	436	90	4'-7"	430	79	268	8	100	16	86	-	-	-	2,749	9.0	7.2	28.9	50	1	126'-10 1/8"
		11-5	10	4	127'-1 1/8"	63'-6 9/16"	10	56	9"	6'-7"	10 1/2"	218	#4	7'-3"	1,056	7'-3"	436	90	4'-7"	430	79	268	8	100	16	86	-	-	-	2,749	9.0	7.2	28.9	50	1	127'-1 1/8"
		11-6	10	4	127'-4"	63'-8"	10	56	9"	6'-7"	10 1/2"	218	#4	7'-3"	1,056	7'-3"	436	90	4'-7"	430	79	268	8	100	16	86	-	-	-	2,749	9.0	7.2	29.0	50	1	127'-4"
		11-7	10	4	127'-7"	63'-9 1/2"	10	56	9"	6'-7"	10 1/2"	218	#4	7'-3"	1,056	7'-3"	436	90	4'-7"	430	79	268	8	100	16	86	-	-	-	2,749	9.0	7.2	29.0	50	1	127'-7"
		11-8	10	4	127'-9 7/8"	63'-10 15/16"	10	56	9"	6'-7"	10 1/2"	218	#4	7'-3"	1,056	7'-3"	436	90	4'-7"	430	79	268	8	100	16	86	-	-	-	2,749	9.0	7.2	29.1	50	1	127'-9 7/8"
E	12	12-1	10	4	127'-2 3/4"	63'-7 3/8"	10	56	9"	6'-7"	10 1/2"	218	#4	7'-3"	1,056	7'-3"	436	90	4'-7"	430	79	268	8	100	16	86	-	-	-	2,749	9.0	7.2	29.0	50	1	127'-2 3/4"
		12-2	10	4	127'-4 1/8"	63'-8 1/16"	10	56	9"	6'-7"	10 1/2"	218	#4	7'-3"	1,056	7'-3"	436	90	4'-7"	430	79	268	8	100	16	86	-	-	-	2,749	9.0	7.2	29.0	50	1	127'-4 1/8"
		12-3	10	4	127'-5 3/8"	63'-8 11/16"	10	56	9"	6'-7"	10 1/2"	218	#4	7'-3"	1,056	7'-3"	436	90	4'-7"	430	79	268	8	100	16	86	-	-	-	2,749	9.0	7.2	29.0	50	1	127'-5 3/8"
		12-4	10	4	127'-6 3/4"	63'-9 3/8"	10	56	9"	6'-7"	10 1/2"	218	#4	7'-3"	1,056	7'-3"	436	90	4'-7"	430	79	268	8	100	16	86	-	-	-	2,749	9.0	7.2	29.0	50	1	127'-6 3/4"
		12-5	10	4	127'-8 1/8"	63'-10 1/16"	10	56	9"	6'-7"	10 1/2"	218	#4	7'-3"	1,056	7'-3"	436	90	4'-7"	430	79	268	8	100	16	86	-	-	-	2,749	9.0	7.2	29.1	50	1	127'-8 1/8"
		12-6	10	4	127'-9 1/2"	63'-10 3/4"	10	56	9"	6'-7"	10 1/2"	218	#4	7'-3"	1,056	7'-3"	436	90	4'-7"	430	79	268	8	100	16	86	-	-	-	2,749	9.0	7.2	29.1	50	1	127'-9 1/2"
		12-7	10	4	127'-10 3/4"	63'-11 3/8"	10	56	8"	6'-6"	9 1/2"	218	#4	7'-2"	1,044	7'-2"	431	90	4'-6"	422	79	268	8	100	16	86	-	-	-	2,724	9.0	7.2	29.1	50	1	127'-10 3/4"
		12-8	10	4	128'-0 1/8"	64'-0 1/16"	10	56	8"	6'-6"	9 1/2"	218	#4	7'-2"	1,044	7'-2"	431	90	4'-6"	422	79	268	8	100	16	86	-	-	-	2,724	9.0	7.2	29.1	50	1	128'-0 1/8"
	13	13-1	10	5	128'-1 1/4"	64'-0 5/8"	10	56	7 1/2"	6'-5 1/2"	9"	218	#4	7'-1 1/2"	1,038	7'-1 1/2"	428	100	4'-5 1/2"	465	79	268	8	100	16	86	-	-	-	2,800	9.0	7.2	29.2	50	1	128'-1 1/4"
		13-2	10	5	128'-1 3/8"	64'-0 11/16"	10	56	7 1/2"	6'-5 1/2"	9"	218	#4	7'-1 1/2"	1,038	7'-1 1/2"	428	100	4'-5 1/2"	465	79	268	8	100	16	86	-	-	-	2,800	9.0	7.2	29.2	50	1	128'-1 3/8"
		13-3	10	5	128'-1 3/8"	64'-0 11/16"	10	56	7 1/2"	6'-5 1/2"	9"	218	#4	7'-1 1/2"	1,038	7'-1 1/2"	428	100	4'-5 1/2"	465	79	268	8	100	16	86	-	-	-	2,800	9.0	7.2	29.2	50	1	128'-1 3/8"
		13-4	10	5	128'-1 1/2"	64'-0 3/4"	10	56	7 1/2"	6'-5 1/2"	9"	218	#4	7'-1 1/2"	1,038	7'-1 1/2"	428	100	4'-5 1/2"	465	79	268	8	100	16	86	-	-	-	2,800	9.0	7.2	29.2	50	1	128'-1 1/2"
		13-5	10	5	128'-1 5/8"	64'-0 13/16"	10	56	7 1/2"	6'-5 1/2"	9"	218	#4	7'-1 1/2"	1,038	7'-1 1/2"	428	100	4'-5 1/2"	465	79	268	8	100	16	86	-	-	-	2,800	9.0	7.2	29.2	50	1	128'-1 5/8"
		13-6	10	5	128'-1 3/4"	64'-0 7/8"	10	56	7 1/2"	6'-5 1/2"	9"	218	#4	7'-1 1/2"	1,038	7'-1 1/2"	428	100	4'-5 1/2"	465	79	268	8	100	16	86	-	-	-	2,800	9.0	7.2	29.2	50	1	128'-1 3/4"
		13-7	10	5	128'-1 3/4"	64'-0 7/8"	10	56	7 1/2"	6'-5 1/2"	9"	218	#4	7'-1 1/2"	1,038	7'-1 1/2"	428	100	4'-5 1/2"	465	79	268	8	100	16	86	-	-	-	2,800	9.0	7.2	29.2	50	1	128'-1 3/4"
		13-8	10	5	128'-1 7/8"	64'-0 15/16"	10	56	7 1/2"	6'-5 1/2"	9"	218	#4	7'-1 1/2"	1,038	7'-1 1/2"	428	100	4'-5 1/2"	465	79	268	8	100	16	86	-	-	-	2,800	9.0	7.2	29.2	50	1	128'-1 7/8"
	14	14-1 TO 14-8	10	4	128'-2"	64'-1"	10	56	7 1/2"	6'-5 1/2"	9"	218	#4	7'-1 1/2"	1,038	7'-1 1/2"	428	100	4'-5 1/2"	465	79	268	8	100	16	86	-	-	-	2,758	9.0	7.2	29.2	50	8	1025'-4"
	15	15-1	7	3	118'-1 3/4"	59'-0 7/8"	39	11	7 1/2"	6'-3 1/2"	9"	244	#4	6'-11 1/2"	1,134	6'-11 1/2"	418	100	4'-5 1/2"	465	92	312	8	97	16	86	-	-	-	2,831	9.0	7.2	25.3	40	1	118'-1 3/4"
		15-2	7	3	118'-0 5/8"	59'-0 5/16"	39	11	7 1/2"	6'-3 1/2"	9"	244	#4	6'-11 1/2"	1,134	6'-11 1/2"	418	100	4'-5 1/2"	465	92	312	8	97	16	86	-	-	-	2,831	9.0	7.2	25.3	40	1	118'-0 5/8"
		15-3	7	3	117'-11 5/8"	58'-11 13/16"	39	11	7 1/2"	6'-3 1/2"	9"	244	#4	6'-11 1/2"	1,134	6'-11 1/2"	418	100	4'-5 1/2"	465	92	312	8	97	16	86	-	-	-	2,831	9.0	7.2	25.3	40	1	117'-11 5/8"
		15-4	7	3	117'-10 7/8"	58'-11 7/16"	39	11	7 1/2"	6'-3 1/2"	9"	244	#4	6'-11 1/2"	1,134	6'-11 1/2"	418	100	4'-5 1/2"	465	92	312	8	97	16	86	-	-	-	2,831	9.0	7.2	25.3	40	1	117'-10 7/8"
		15-5	7	3	117'-10 1/4"	58'-11 1/8"	39	11	7 1/2"	6'-3 1/2"	9"	244	#4	6'-11 1/2"	1,134	6'-11 1/2"	418	100	4'-5 1/2"	465	92	312	8	97	16	86	-	-	-	2,831	9.0	7.2	25.3	40	1	117'-10 1/4"
		15-6	7	3	117'-9 3/4"	58'-10 7/8"	39	11	7 1/2"	6'-3 1/2"	9"	244	#4	6'-11 1/2"	1,134	6'-11 1/2"	418	100	4'-5 1/2"	465	92	312	8	97	16	86	-	-	-	2,831	9.0	7.2	25.2	40	1	117'-9 3/4"
		15-7	7	3	117'-9 3/8"	58'-10 11/16"	39	11	7 1/2"	6'-3 1/2"	9"	244	#4	6'-11 1/2"	1,134	6'-11 1/2"	418	100	4'-5 1/2"	465	92	312	8	97	16	86	-	-	-	2,831	9.0	7.2	25.2	40	1	117'-9 3/8"
		15-8	7	3	117'-9 1/4"	58'-10 5/8"	39	11	7 1/2"	6'-3 1/2"	9"	244	#4	6'-11 1/2"	1,134	6'-11 1/2"	418	100	4'-5 1/2"	465	92	312	8	97	16	86	-	-	-	2,831	9.0	7.2	25.2	40	1	117'-9 1/4"
	16	16-1	7	3	112'-10 3/4"	56'-5 3/8"	30	19	7 1/2"	6'-3 1/2"	9"	224	#4	6'-11 1/2"	1,041	6'-11 1/2"	418	100	4'-5 1/2"	465	82	278	8	97	16	86	-	-	-	2,704	9.0	7.2	24.2	40	1	112'-10 3/4"
		16-2	7	3	114'-3 1/2"	57'-1 3/4"	30	20	7 1/2"	6'-3 1/2"	9"	226	#4	6'-11 1/2"	1,050	6'-11 1/2"	418	100	4'-5 1/2"	465	83	281	8	97	16	86	-	-	-	2,716	9.0	7.2	24.5	40	1	114'-3 1/2"
		16-3	7	3	115'-9"	57'-10 1/2"	30	21	7 1/2"	6'-3 1/2"	9"	228	#4	6'-11 1/2"	1,060	6'-11 1/2"	418	100	4'-5 1/2"	465	84	285	8	97	16	86	-	-	-	2,730	9.0	7.2	24.8	40	1	115'-9"
		16-4	7	3	117'-3 3/8"	58'-7 11/16"	30	22	7 1/2"	6'-3 1/2"	9"	230	#4	6'-11 1/2"	1,069	6'-11 1/2"	418	100	4'-5 1/2"	465	85	288	8	97	16	86	-	-	-	2,742	9.0	7.2	25.1	40	1	117'-3 3/8"
		16-5	7	3	117'-10 3/4"	58'-11 3/8"	30	22	7 1/2"	6'-3 1/2"	9"	230	#4	6'-11 1/2"	1,069	6'-11 1/2"	418	100	4'-5 1/2"	465	85	288	8	97	16	86	-	-	-	2,742	9.0	7.2	25.3	40	1	117'-10 3/4"
		16-6	7	3	117'-9 1/2"	58'-10 3/4"	30	22	7 1/2"	6'-3 1/2"	9"	230	#4	6'-11 1/2"	1,069	6'-11 1/2"	418	100	4'-5 1/2"	465	85	288	8	97	16	86	-	-	-	2,742	9.0	7.2	25.2	40	1	117'-9 1/2"
		16-7 TO 16-10	7	3	117'-9 1/8"	58'-10 9/16"	30	22	7 1/2"	6'-3 1/2"	9"	230	#4	6'-11 1/2"	1,069	6'-11 1/2"	418	100	4'-5 1/2"	465	85	288	8	97	16	86	-	-	-	2,742	9.0	7.2	25.2	40	4	471'-0 1/2"
F	17	17-1 TO 17-6	9	1	119'-2"	59'-7"	20	37	6"	6'-2"	7 1/2"	220	#4	6'-10"	1,004	6'-10"	411	100	4'-4"	452	80	271	8	97	16	86	-	-	-	2,682	9.0	7.2	25.5	44	6	715'-0"
	18	18-1 TO 18-6	9	2	119'-2"	59'-7"	20	37	6"	6'-2"	7 1/2"	220	#4	6'-10"	1,004	6'-10"	411	100	4'-4"	452	80	271	8	97	16	86	-	-	-	2,724	9.0	7.2	25.5	44	6	715'-0"
	19	19-1 TO 19-6	9	2	119'-2"	59'-7"	20	37	6"	6'-2"	7 1/2"	220	#4	6'-10"	1,004	6'-10"	411	100	4'-4"	452	80	271	8	97	16	86	-	-	-	2,724	9.0	7.2	25.5	44	6	715'-0"
	20	20-1 TO 20-6	9	1	119'-2"	59'-7"	20	37	6"	6'-2"	7 1/2"	220	#4	6'-10"	1,004	6'-10"	411	90	4'-4"	407	80	271	8	97	16	86	-	-	-	2,637	9.0	7.2	25.5	44	6	715'-0"

* GDR. SHT. REFERS TO GIRDER PLAN AND ELEVATION SHEETS 1 OF 12, 2 OF 12, 3 OF 12, 4 OF 12, AND 5 OF 12.

NOTE: REINF. STEEL SHOWN IS TOTAL REINFORCING STEEL FOR GIRDER INDICATED.

PROJECT NO. U-2524C

GUILFORD COUNTY

STATION: POT 407+73.35 -L-
= POT 29+32.06 -Y4-

SHEET 10 OF 12

NORTH CAROLINA PROFESSIONAL SEAL 28479 ENGINEER KEVIN G. BAILEY 5-30-13

STATE OF NORTH CAROLINA
DEPARTMENT OF TRANSPORTATION
RALEIGH

PRESTRESSED CONCRETE MODIFIED BULB TEE GIRDER TABLE

-LEFT LANE-

STV / Ralph Whitehead Associates, Inc.
1000 West Morehead St., Ste. 200
Charlotte, NC 28208
NC License No. F-0991

REVISIONS						SHEET NO.
NO.	BY:	DATE:	NO.	BY:	DATE:	S-109
1			3			TOTAL SHEETS
2			4			836

DRAWN BY : VMW DATE : 12-12
CHECKED BY : TJT DATE : 12-12
DESIGN ENGINEER OF RECORD: T. TOWNSEND DATE : 5-13

5/30/2013 4:55:29 PM R:\ustation\Finals\PCMBT 10 of 12.dgn

GIRDER TABLE

UNIT	SPAN	GDR.	STRAND LAYOUT TYPE	* GDR. SHT.	"A"	"B"	"C"	"D"	"E"	"F"	"G"	S1 BARS NO.	S1 BARS SIZE	S1 BARS LENGTH	S1 BARS WEIGHT (LBS)	S2 BARS LENGTH	S2 BARS WEIGHT (LBS)	S6 BARS NO.	S6 BARS LENGTH	S6 BARS WEIGHT (LBS)	S9 BARS NO.	S9 BARS WEIGHT (LBS)	S11 BARS NO.	S11 BARS WEIGHT (LBS)	S12 BARS NO.	S12 BARS WEIGHT (LBS)	S13 BARS NO.	S13 BARS LENGTH	S13 BARS WEIGHT (LBS)	REINF. STEEL (LBS)	CONCRETE f'c (KSI)	CONCRETE f'ci (KSI)	CONCRETE C.Y.	0.6" Ø L.R. STRANDS NO.	NO. OF GDRS.	TOTAL LENGTH
I	27	27-1	6	1	106'-8 7/8"	53'-4 7/16"	8	45	6 1/2"	6'-2 1/2"	8"	188	#5	6'-10 1/2"	1,348	6'-10 1/2"	413	93	4'-4 1/2"	424	64	217	8	97	16	86	-	-	-	2,946	8.0	6.4	22.9	38	1	106'-8 7/8"
		27-2	6	1	106'-11"	53'-5 1/2"	8	45	6 1/2"	6'-2 1/2"	8"	188	#5	6'-10 1/2"	1,348	6'-10 1/2"	413	93	4'-4 1/2"	424	64	217	16	195	-	-	16	14'-9"	158	3,116	8.0	6.4	22.9	38	1	106'-11"
		27-3	6	1	107'-1 1/8"	53'-6 5/16"	8	45	6 1/2"	6'-2 1/2"	8"	188	#5	6'-10 1/2"	1,348	6'-10 1/2"	413	93	4'-4 1/2"	424	64	217	16	195	-	-	16	14'-10"	159	3,117	8.0	6.4	22.9	38	1	107'-1 1/8"
		27-4	6	1	107'-3 1/4"	53'-7 5/8"	8	45	6 1/2"	6'-2 1/2"	8"	188	#5	6'-10 1/2"	1,348	6'-10 1/2"	413	93	4'-4 1/2"	424	64	217	16	195	-	-	16	14'-10"	159	3,117	8.0	6.4	23.0	38	1	107'-3 1/4"
		27-5	6	1	107'-5 3/8"	53'-8 11/16"	8	45	6 1/2"	6'-2 1/2"	8"	188	#5	6'-10 1/2"	1,348	6'-10 1/2"	413	93	4'-4 1/2"	424	64	217	16	195	-	-	16	14'-11"	159	3,117	8.0	6.4	23.0	38	1	107'-5 3/8"
		27-6	6	1	107'-7 5/8"	53'-9 13/16"	8	45	6 1/2"	6'-2 1/2"	8"	188	#5	6'-10 1/2"	1,348	6'-10 1/2"	413	93	4'-4 1/2"	424	64	217	8	97	16	86	-	-	-	2,946	8.0	6.4	23.1	38	1	107'-7 5/8"
	28	28-1	6	2	99'-3 3/4"	49'-7 7/8"	8	40	6 1/2"	6'-2 1/2"	8"	178	#5	6'-10 1/2"	1,276	6'-10 1/2"	413	100	4'-4 1/2"	456	59	200	8	97	16	86	-	-	-	2,931	8.0	6.4	21.3	38	1	99'-3 3/4"
		28-2	6	2	99'-5 1/4"	49'-8 5/8"	8	40	6 1/2"	6'-2 1/2"	8"	178	#5	6'-10 1/2"	1,276	6'-10 1/2"	413	100	4'-4 1/2"	456	59	200	16	195	-	-	16	14'-2"	151	3,094	8.0	6.4	21.3	38	1	99'-5 1/4"
		28-3	6	2	99'-7"	49'-9 1/2"	8	40	6 1/2"	6'-2 1/2"	8"	178	#5	6'-10 1/2"	1,276	6'-10 1/2"	413	100	4'-4 1/2"	456	59	200	16	195	-	-	16	14'-3"	152	3,095	8.0	6.4	21.3	38	1	99'-7"
		28-4	6	2	99'-8 1/2"	49'-10 1/4"	8	40	6 1/2"	6'-2 1/2"	8"	178	#5	6'-10 1/2"	1,276	6'-10 1/2"	413	100	4'-4 1/2"	456	59	200	16	195	-	-	16	14'-3"	152	3,095	8.0	6.4	21.4	38	1	99'-8 1/2"
		28-5	6	2	99'-10 1/4"	49'-11 1/8"	8	40	6 1/2"	6'-2 1/2"	8"	178	#5	6'-10 1/2"	1,276	6'-10 1/2"	413	100	4'-4 1/2"	456	59	200	16	195	-	-	16	14'-3"	152	3,095	8.0	6.4	21.4	38	1	99'-10 1/4"
		28-6	6	2	99'-11 7/8"	49'-11 15/16"	8	40	6 1/2"	6'-2 1/2"	8"	178	#5	6'-10 1/2"	1,276	6'-10 1/2"	413	100	4'-4 1/2"	456	59	200	8	97	16	86	-	-	-	2,931	8.0	6.4	21.4	38	1	99'-11 7/8"
	29	29-1	6	2	111'-6 5/8"	55'-9 5/16"	8	48	6 1/2"	6'-2 1/2"	8"	194	#5	6'-10 1/2"	1,391	6'-10 1/2"	413	100	4'-4 1/2"	456	67	227	8	97	16	86	-	-	-	3,073	8.0	6.4	23.9	38	1	111'-6 5/8"
		29-2	6	2	111'-8 1/8"	55'-10 1/16"	8	48	6 1/2"	6'-2 1/2"	8"	194	#5	6'-10 1/2"	1,391	6'-10 1/2"	413	100	4'-4 1/2"	456	67	227	16	195	-	-	16	13'-7"	145	3,230	8.0	6.4	23.9	38	1	111'-8 1/8"
		29-3	6	2	111'-9 5/8"	55'-10 13/16"	8	48	6 1/2"	6'-2 1/2"	8"	194	#5	6'-10 1/2"	1,391	6'-10 1/2"	413	100	4'-4 1/2"	456	67	227	16	195	-	-	16	13'-7"	145	3,230	8.0	6.4	24.0	38	1	111'-9 5/8"
		29-4	6	2	111'-11 1/8"	55'-11 9/16"	8	48	6 1/2"	6'-2 1/2"	8"	194	#5	6'-10 1/2"	1,391	6'-10 1/2"	413	100	4'-4 1/2"	456	67	227	16	195	-	-	16	13'-8"	146	3,231	8.0	6.4	24.0	38	1	111'-11 1/8"
		29-5	6	2	112'-0 5/8"	56'-0 5/16"	8	48	6 1/2"	6'-2 1/2"	8"	194	#5	6'-10 1/2"	1,391	6'-10 1/2"	413	100	4'-4 1/2"	456	67	227	16	195	-	-	16	13'-8"	146	3,231	8.0	6.4	24.0	38	1	112'-0 5/8"
		29-6	6	2	112'-2 1/8"	56'-1 1/16"	8	48	6 1/2"	6'-2 1/2"	8"	194	#5	6'-10 1/2"	1,391	6'-10 1/2"	413	100	4'-4 1/2"	456	67	227	8	97	16	86	-	-	-	3,073	8.0	6.4	24.0	38	1	112'-2 1/8"
	30	30-1	6	1	111'-0 1/4"	55'-6 1/8"	8	47	6 1/2"	6'-2 1/2"	8"	192	#5	6'-10 1/2"	1,377	6'-10 1/2"	413	100	4'-4 1/2"	456	66	224	8	97	16	86	-	-	-	3,014	8.0	6.4	23.8	38	1	111'-0 1/4"
		30-2	6	1	111'-1 1/2"	55'-6 3/4"	8	47	6 1/2"	6'-2 1/2"	8"	192	#5	6'-10 1/2"	1,377	6'-10 1/2"	413	100	4'-4 1/2"	456	66	224	16	195	-	-	16	13'-0"	139	3,165	8.0	6.4	23.8	38	1	111'-1 1/2"
		30-3	6	1	111'-2 5/8"	55'-7 5/16"	8	47	6 1/2"	6'-2 1/2"	8"	192	#5	6'-10 1/2"	1,377	6'-10 1/2"	413	100	4'-4 1/2"	456	66	224	16	195	-	-	16	13'-0"	139	3,165	8.0	6.4	23.8	38	1	111'-2 5/8"
		30-4	6	1	111'-3 7/8"	55'-7 15/16"	8	47	6 1/2"	6'-2 1/2"	8"	192	#5	6'-10 1/2"	1,377	6'-10 1/2"	413	100	4'-4 1/2"	456	66	224	16	195	-	-	16	13'-1"	140	3,166	8.0	6.4	23.9	38	1	111'-3 7/8"
		30-5	6	1	111'-5 1/8"	55'-8 9/16"	8	47	6 1/2"	6'-2 1/2"	8"	192	#5	6'-10 1/2"	1,377	6'-10 1/2"	413	100	4'-4 1/2"	456	66	224	16	195	-	-	16	13'-1"	140	3,166	8.0	6.4	23.9	38	1	111'-5 1/8"
		30-6	6	1	111'-6 3/8"	55'-9 3/16"	8	47	6 1/2"	6'-2 1/2"	8"	192	#5	6'-10 1/2"	1,377	6'-10 1/2"	413	100	4'-4 1/2"	456	66	224	8	97	16	86	-	-	-	3,014	8.0	6.4	23.9	38	1	111'-6 3/8"

* GDR. SHT. REFERS TO GIRDER PLAN AND ELEVATION SHEETS 1 OF 12, 2 OF 12, 3 OF 12, 4 OF 12, AND 5 OF 12.

NOTE: REINF. STEEL SHOWN IS TOTAL REINFORCING STEEL FOR GIRDER INDICATED.

HOLD DOWN FORCE

UNIT	SPAN	GDR.	HOLD DOWN FORCE (K)
A	2	2-1 TO 2-6	40
B	3	3-1 TO 3-7	39
	4	4-1	46
C	8	8-7	46
D	9-11	1 TO 8	38
E	12-14	1 TO 8	38
	15	15-1 TO 15-8	41
	16	16-1 TO 16-10	41
F	17-20	1 TO 6	51
I	27-30	1 TO 6	39

(HOLD DOWN FORCES LESS THAN 20 KIPS NOT SHOWN)

PROJECT NO. U-2524C
GUILFORD COUNTY
STATION: POT 407+73.35 -L-
= POT 29+32.06 -Y4-
SHEET 11 OF 12

STATE OF NORTH CAROLINA
DEPARTMENT OF TRANSPORTATION
RALEIGH

PRESTRESSED CONCRETE MODIFIED BULB TEE GIRDER TABLE

-LEFT LANE-

NORTH CAROLINA PROFESSIONAL SEAL 28479 ENGINEER KEVIN G. BAILEY
5-30-13

STV / Ralph Whitehead Associates, Inc.
1000 West Morehead St., Ste. 200
Charlotte, NC 28208
NC License No. F-0991

REVISIONS						
NO.	BY:	DATE:	NO.	BY:	DATE:	
1			3			
2			4			

SHEET NO. S-110
TOTAL SHEETS 836

DRAWN BY : VMW DATE : 12-12
CHECKED BY : TJT DATE : 12-12
DESIGN ENGINEER OF RECORD: T. TOWNSEND DATE : 5-13

5/30/2013 8:59:34 PM R:\ustation\Finals\PCMBT 11 of 12.dgn

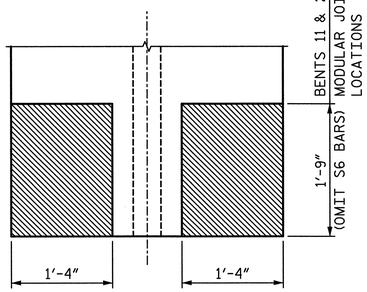

PARTIAL PLAN

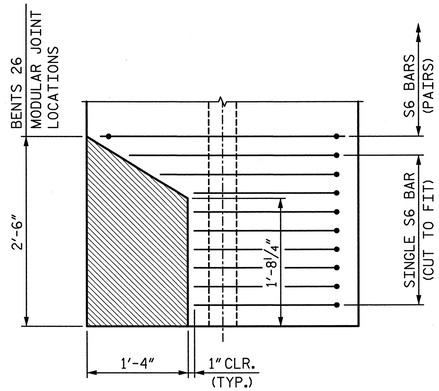

PARTIAL PLAN

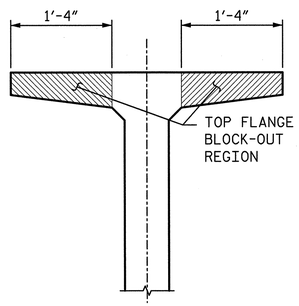

END ELEVATION

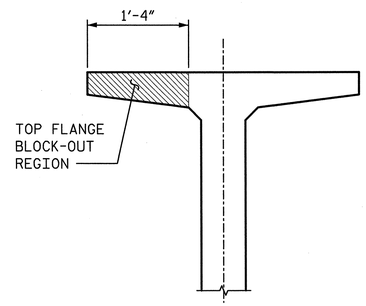

END ELEVATION

TOP FLANGE BLOCK-OUT DETAIL

FLANGE CLIP DIMENSION						
"X"	"Y"	GIRDER	"A"	"B"	"C"	"D"
4	5	5-1 TO 5-7	-	-	6"	6"
6	7	7-1 TO 7-7	8"	10"	-	-
15	RAMP B BENT 1	16-1 TO 16-2	1'-0"	2"	-	-
15	RAMP B BENT 1	16-3 TO 16-4	1'-0"	2"	1'-0"	2"
29	END BENT 2	30-1 TO 30-6	-	-	10"	5"

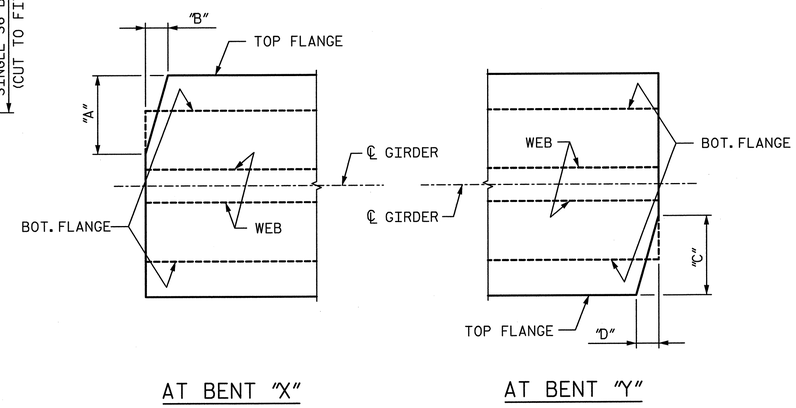

AT BENT "X"

AT BENT "Y"

FLANGE CLIP DETAIL

(CLIP FOR SPAN 5, 7, 16, 30)

NOTES

ALL PRESTRESSING STRANDS SHALL BE 7-WIRE LOW-RELAXATION GRADE 270 STRANDS AND SHALL CONFORM TO AASHTO M203 EXCEPT FOR SAMPLING REQUIREMENTS WHICH SHALL BE IN ACCORDANCE WITH THE STANDARD SPECIFICATIONS.

ALL REINFORCING STEEL SHALL BE GRADE 60.

APPLY EPOXY PROTECTIVE COATING TO END OF GIRDER SURFACES INDICATED IN ELEVATION VIEW.

EMBEDDED PLATE "B-1" SHALL BE GALVANIZED IN ACCORDANCE WITH THE STANDARD SPECIFICATIONS. BEVEL EDGES OF PLATE "B-1" TO GIVE CLOSE FIT BUT NOT TIGHT FIT TO STEEL CASTING FORM.

ANCHOR STUDS SHALL CONFORM TO AASHTO M169 GRADES 1010 THROUGH 1020 OR APPROVED EQUAL, AND SHALL MEET THE TYPE "B" REQUIREMENTS OF SUBSECTION 7.3 OF THE ANSI/AASHTO/AWS D1.5 BRIDGE WELDING CODE.

AT ENDS OF GIRDERS TO BE EMBEDDED IN CONCRETE DIAPHRAGMS OR ENDWALLS, PRESTRESSING STRANDS MAY EXTEND A MAXIMUM OF 2" BEYOND THE GIRDER ENDS. OTHERWISE PRESTRESSED STRANDS SHALL BE CUT FLUSH WITH THE GIRDER ENDS.

THE TRANSFER OF LOAD FROM THE ANCHORAGES TO THE GIRDER SHALL BE DONE WHEN CONCRETE HAS REACHED A COMPRESSIVE STRENGTH OF NOT LESS THAN THE VALUES INDICATED ON SHEETS 9 THROUGH 11 OF 12.

DEPENDING ON THE TYPE OF SYSTEM USED TO SUPPORT THE DECK SLAB FORMS, PRESET ANCHORS MAY BE NECESSARY IN THE PRESTRESSED CONCRETE GIRDER.

THE TOP SURFACE OF THE GIRDER, EXCLUDING THE OUTSIDE 4", SHALL BE RAKED TO A DEPTH OF ¼".

WHEN DRAPED STRANDS ARE DETAILED, THE LONGITUDINAL LOCATION OF THE HOLD DOWN DEVICES SHALL BE WITHIN 6" OF THE LOCATION SHOWN AND THE CENTER OF GRAVITY OF THE GROUP OF DRAPED STRANDS SHALL BE LOCATED WITHIN ½" OF THE THEORETICAL LOCATION SHOWN.

A 2" X 2" CHAMFER IS ALLOWED AT THE INTERSECTION OF THE WEB AND THE BOTTOM FLANGE.

THE CONTRACTOR HAS THE OPTION TO PROVIDE, AT NO ADDITIONAL COST TO THE DEPARTMENT, 2 ADDITIONAL STRANDS AT THE TOP OF THE GIRDER TO FACILITATE TYING OF THE REINFORCING STEEL. THESE STRANDS SHALL BE PULLED TO A LOAD OF 5,000 lbs.

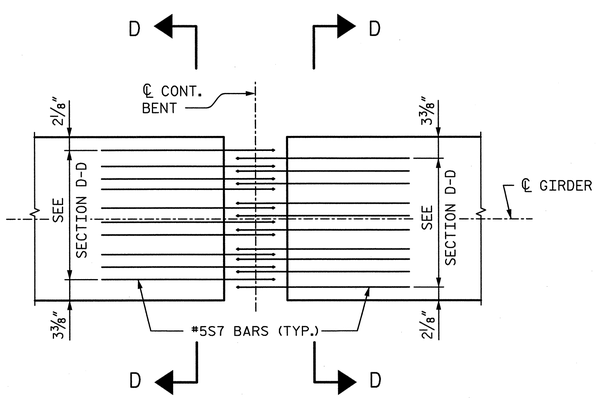

PLAN- BOTTOM FLANGE

EXTERIOR S7 BARS SHOWN, OTHERS OMITTED FOR CLARITY.

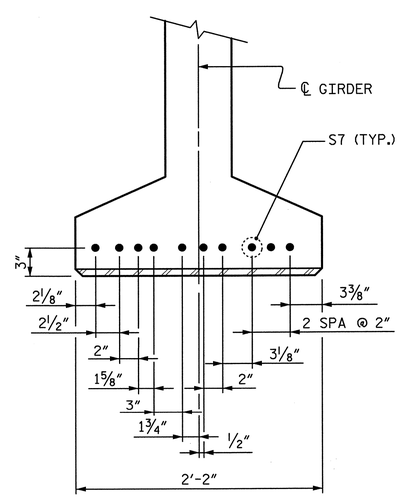

SECTION D-D

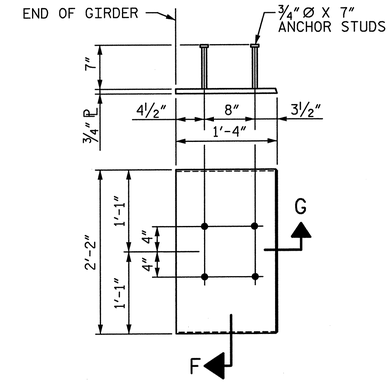

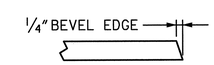

SECTION "G"

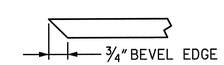

SECTION "F"

(SEE NOTES)

EMBEDDED PLATE "B-1" DETAILS FOR AASHTO 72" & 74" MODIFIED BULB TEES

(2 REQ'D. PER GIRDER)

PROJECT NO. U-2524C

GUILFORD COUNTY

STATION: POT 407+73.35 -L-
= POT 29+32.06 -Y4-

SHEET 12 OF 12

NORTH CAROLINA PROFESSIONAL SEAL 28479 ENGINEER KEVIN G. BAILEY 5-30-13

STATE OF NORTH CAROLINA
DEPARTMENT OF TRANSPORTATION
RALEIGH

PRESTRESSED CONCRETE MODIFIED BULB TEE GIRDER DETAILS

-LEFT LANE-

REVISIONS							
NO.	BY:	DATE:	NO.	BY:	DATE:		SHEET NO. S-111
1			3				TOTAL SHEETS 83
2			4				

STV / Ralph Whitehead Associates, Inc.
1000 West Morehead St., Ste. 200
Charlotte, NC 28208
NC License No. F-0991

DRAWN BY : VMW DATE : 10-12
CHECKED BY : TJT DATE : 12-12
DESIGN ENGINEER OF RECORD: T. TOWNSEND DATE : 5-13

5/30/2013 4:55:40 PM R:\ustation\Finals\PCMBT 12 of 12.dgn

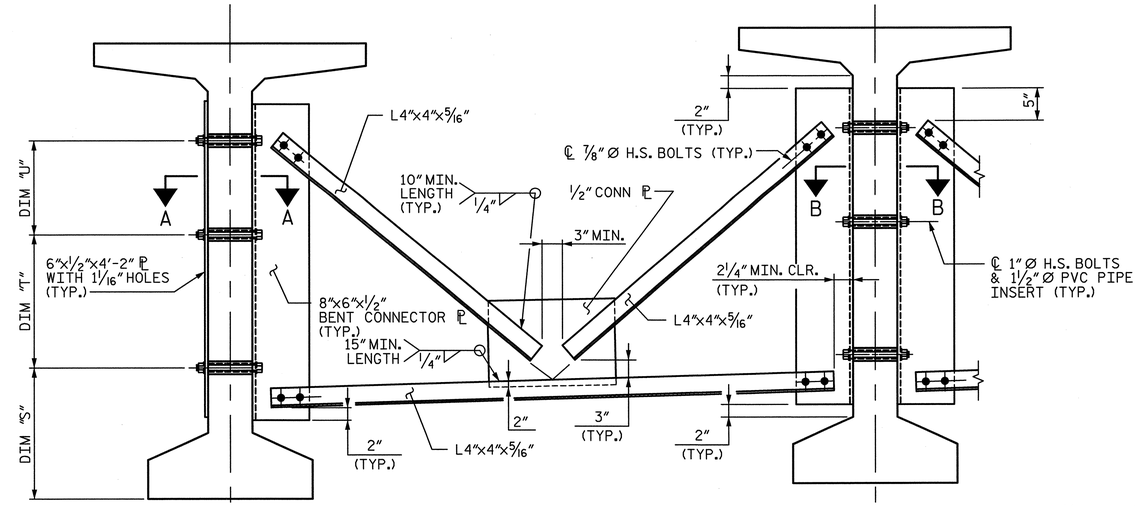

EXTERIOR GIRDER

INTERIOR GIRDER

PART SECTION AT INTERMEDIATE DIAPHRAGM

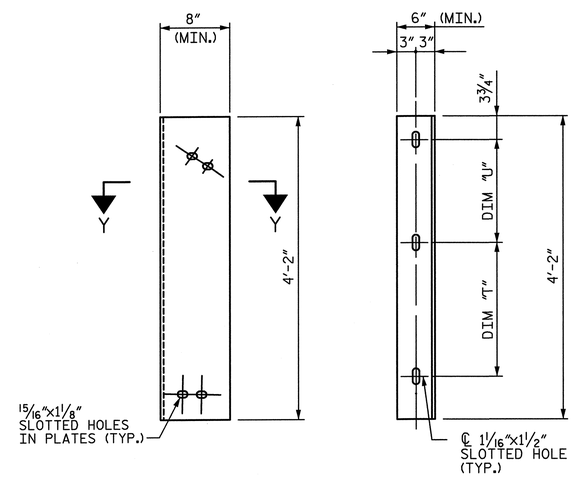

DIAPHRAGM FACE

WEB FACE

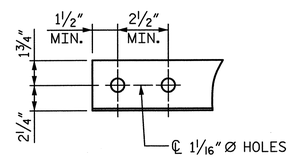

ANGLE END

(L4"x4"x5/16")

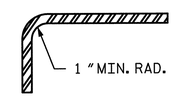

SECTION Y-Y

CONNECTOR PLATE DETAIL

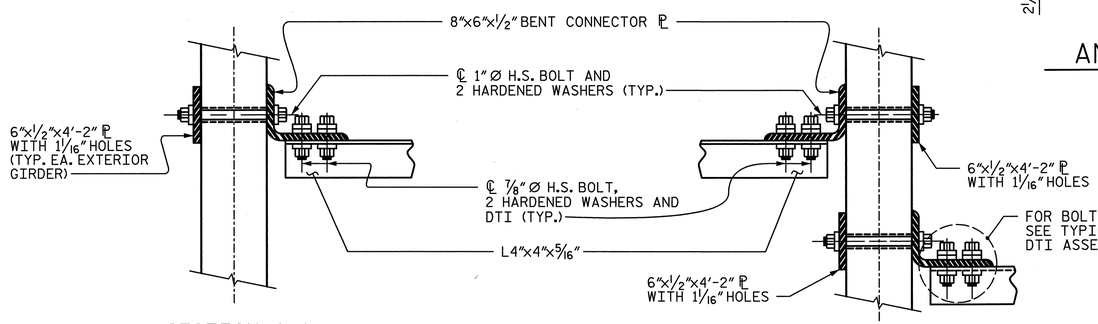

SECTION A-A

SECTION B-B

CONNECTION DETAILS

(FOR SKEW > 110° OR SKEW < 70°)

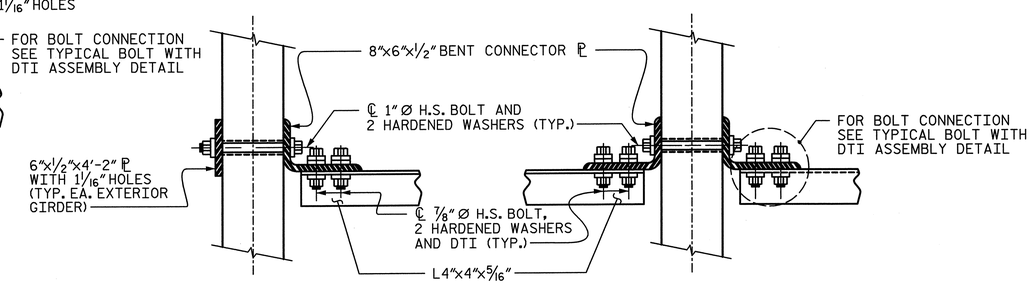

SECTION A-A

SECTION B-B

CONNECTION DETAILS

(FOR SKEW = 90°)

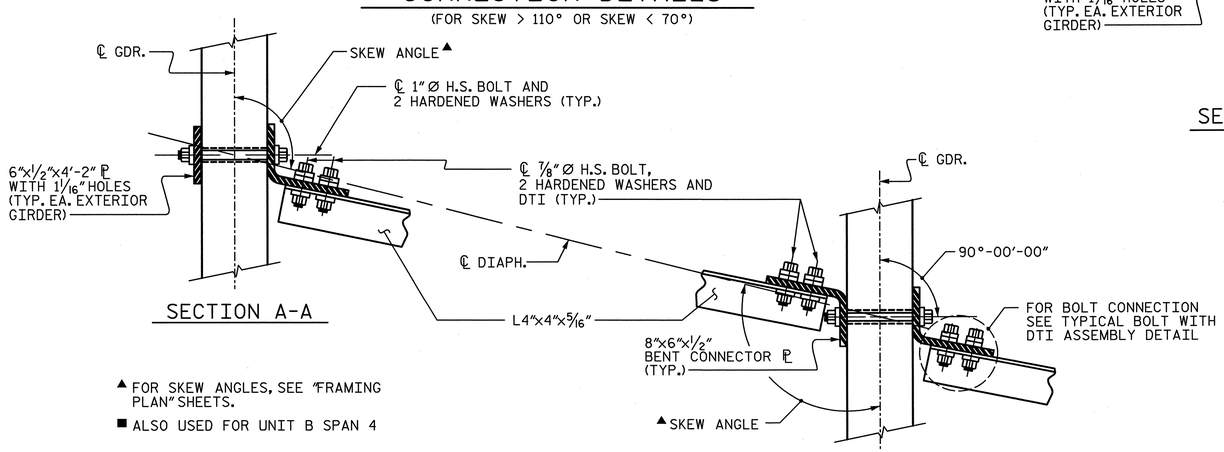

SECTION A-A

SECTION B-B

▲ FOR SKEW ANGLES, SEE "FRAMING PLAN" SHEETS.

■ ALSO USED FOR UNIT B SPAN 4

CONNECTION DETAILS

(FOR 70°< SKEW < 90° OR 90°< SKEW < 110°) ■

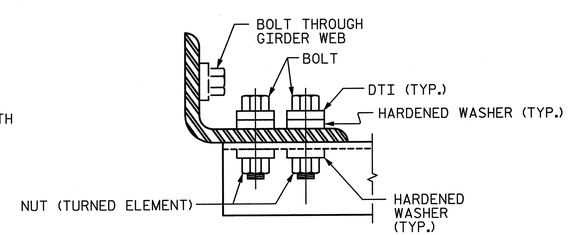

BOLT WITH DTI ASSEMBLY DETAIL

STRUCTURAL STEEL NOTES

ALL INTERMEDIATE DIAPHRAGM STEEL AND CONNECTOR PLATES SHALL BE AASHTO M270 GRADE 50 OR APPROVED EQUAL.

TENSION ON THE ASTM A325 BOLTS THROUGH THE ANGLE MEMBER SHALL BE CALIBRATED USING DIRECT TENSION INDICATOR WASHERS IN ACCORDANCE WITH THE STANDARD SPECIFICATIONS.

TENSION ON THE ASTM A449 BOLTS THROUGH THE GIRDER WEB SHALL BE SNUG TIGHTENED FOLLOWED BY AN ADDITIONAL 1/4 TURN.

THE PLATES, BENT PLATES, AND ANGLES SHALL BE GALVANIZED OR METALLIZED IN ACCORDANCE WITH THE STANDARD SPECIFICATIONS. FOR THERMAL SPRAYED COATINGS (METALLIZATION), SEE SPECIAL PROVISIONS.

FOR METALLIZATION, APPLY AN 8 MIL THICK 99.99 PERCENT ZINC (W-Zn-1) THERMAL SPRAYED COATING WITH A 0.5 MIL THICK SEAL COAT TO ALL STEEL DIAPHRAGM SURFACES IN ACCORDANCE WITH THE THERMAL SPRAYED COATINGS SPECIAL PROVISION AND SECTION 442 OF THE STANDARD SPECIFICATIONS.

GALVANIZE THE HIGH STRENGTH BOLTS, NUTS, WASHERS AND DIRECT TENSION INDICATORS IN ACCORDANCE WITH THE STANDARD SPECIFICATIONS.

USE AN ASTM F436 HARDENED WASHER WITH STANDARD AND SLOTTED HOLES UNDER EACH BOLT HEAD AND NUT.

FOR BOLTS THROUGH THE GIRDER WEB, PROVIDE SUFFICIENT LENGTH OF THREADS ON ALL BOLTS TO ACCOMMODATE WASHERS AND THE THICKNESS OF CONNECTING MEMBER PLUS AT LEAST 1/4" PROJECTION BEYOND THE NUT.

INTERMEDIATE DIAPHRAGM ASSEMBLY SHALL COMPLY WITH SECTION 1072 OF THE STANDARD SPECIFICATIONS.

SUBMIT TWO SETS OF WORKING DRAWINGS FOR THE INTERMEDIATE DIAPHRAGM ASSEMBLY FOR REVIEW, COMMENTS AND ACCEPTANCE. AFTER REVIEW, COMMENTS, AND ACCEPTANCE, SUBMIT SEVEN SETS FOR DISTRIBUTION.

IN THE EXTERIOR BAYS, PLACE TEMPORARY STRUTS BETWEEN PRESTRESSED GIRDERS ADJACENT TO THE STEEL DIAPHRAGMS. STRUTS SHALL REMAIN IN PLACE 3 DAYS AFTER CONCRETE IS PLACED.

THE COST OF THE STEEL DIAPHRAGMS AND ASSEMBLIES SHALL BE INCLUDED IN THE UNIT PRICE BID FOR PRESTRESSED CONCRETE GIRDERS.

FOR DIMENSIONS "S", "T", & "U", SEE "PRESTRESSED CONCRETE MODIFIED BULB TEE GIRDER DIAPHRAGM DETAILS" SHEET.

PROJECT NO. U-2524C

GUILFORD COUNTY

STATION: POT 407+73.35 -L-
= POT 29+32.06 -Y4-

STATE OF NORTH CAROLINA
DEPARTMENT OF TRANSPORTATION
RALEIGH

INTERMEDIATE STEEL DIAPHRAGM DETAILS FOR PRESTRESSED CONCRETE MODIFIED BULB TEE GIRDERS -LEFT LANE-

NORTH CAROLINA PROFESSIONAL SEAL 28479 ENGINEER KEVIN G. BAILEY 5-30-13

DRAWN BY : VMW	DATE : 10-12	DESIGN ENGINEER OF RECORD: T. TOWNSEND	DATE : 5-13
CHECKED BY : TJT	DATE : 1-13		

STV / Ralph Whitehead Associates, Inc.
1000 West Morehead St., Ste. 200
Charlotte, NC 28208
NC License No. F-0991

REVISIONS								SHEET NO.
NO.	BY:	DATE:	NO.	BY:	DATE:			S-112
1			3					TOTAL SHEETS
2			4					83

R:\station\Finals\Int. Steel Diaphragms.dgn 5/30/2013 4:55:44 PM

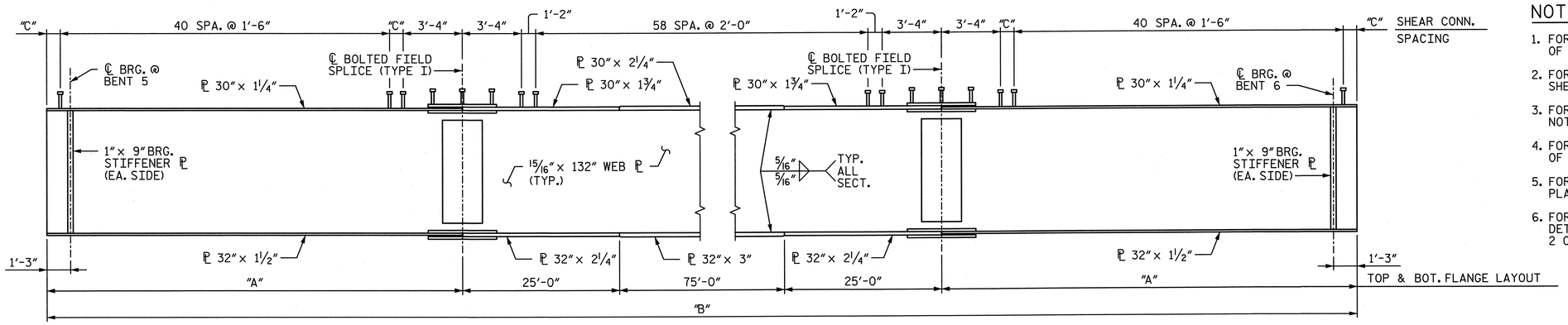

GIRDERS 1-3 ELEVATION

(CONNECTOR PLATES AND COMBINATION CONNECTOR/STIFFENER PLATES NOT SHOWN FOR CLARITY. FOR PLACEMENT, SEE FRAMING PLAN)

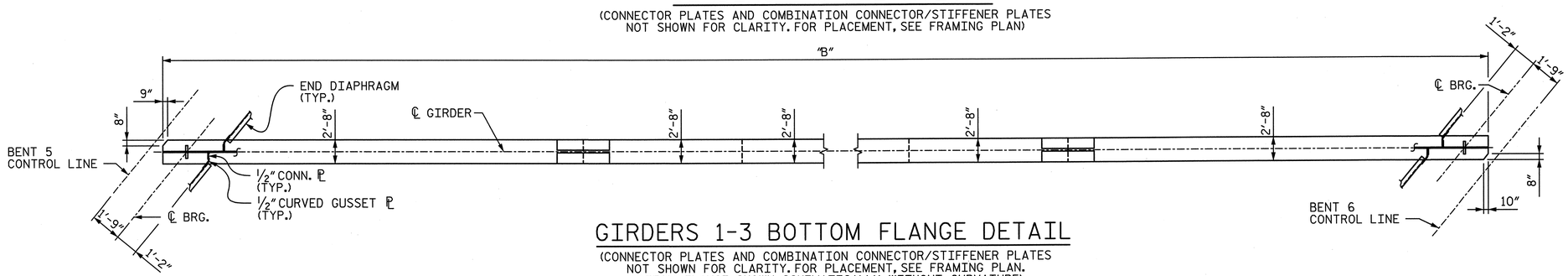

GIRDERS 1-3 BOTTOM FLANGE DETAIL

(CONNECTOR PLATES AND COMBINATION CONNECTOR/STIFFENER PLATES NOT SHOWN FOR CLARITY. FOR PLACEMENT, SEE FRAMING PLAN. BOTTOM FLANGE SHOWN SCHEMATICALLY WITHOUT CURVATURE)

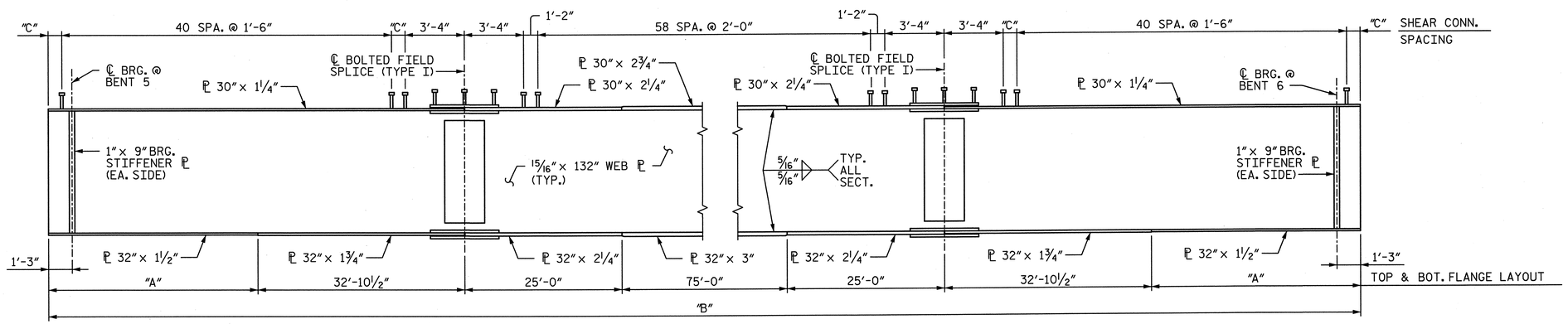

GIRDERS 4 & 5 ELEVATION

(CONNECTOR PLATES AND COMBINATION CONNECTOR/STIFFENER PLATES NOT SHOWN FOR CLARITY. FOR PLACEMENT, SEE FRAMING PLAN)

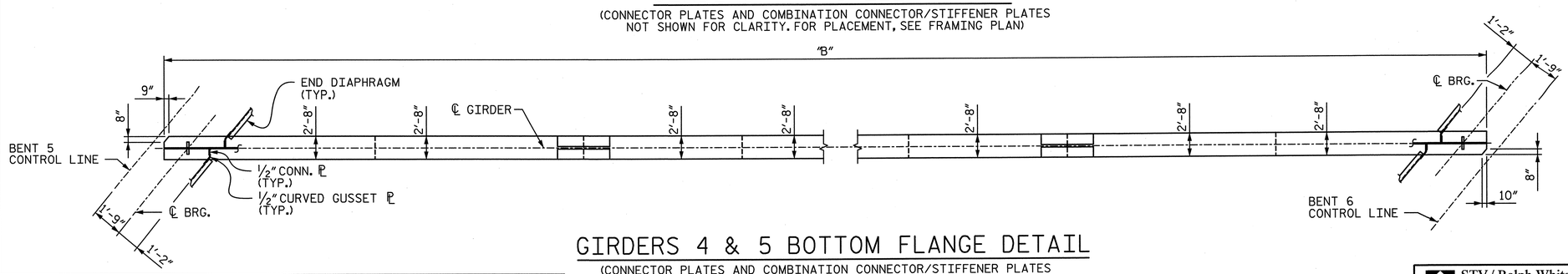

GIRDERS 4 & 5 BOTTOM FLANGE DETAIL

(CONNECTOR PLATES AND COMBINATION CONNECTOR/STIFFENER PLATES NOT SHOWN FOR CLARITY. FOR PLACEMENT, SEE FRAMING PLAN. BOTTOM FLANGE SHOWN SCHEMATICALLY WITHOUT CURVATURE)

NOTES:

1. FOR CHARPY V-NOTCH TEST, SEE ARTICLE 1072-7 OF THE STANDARD SPECIFICATIONS.
2. FOR STRUCTURAL STEEL DIAPHRAGM DETAILS, SEE SHEET 10 OF 17.
3. FOR STRUCTURAL STEEL DETAILS AND ADDITIONAL NOTES, SEE SHEETS 11 AND 12 OF 17.
4. FOR BOLTED FIELD SPLICE DETAILS, SEE SHEET 13 OF 17.
5. FOR ADDITIONAL GIRDER DETAILS, SEE "FRAMING PLAN SPAN 6".
6. FOR SHEAR CONNECTOR DETAILS, TOP FLANGE CLIP DETAILS AND GIRDER DIMENSIONS, SEE SHEET 2 OF 17.

PROJECT NO. U-2524C

GUILFORD COUNTY

STATION: POT 407+73.35 -L-
= POT 29+32.06 -Y4-

SHEET 1 OF 17

STATE OF NORTH CAROLINA
DEPARTMENT OF TRANSPORTATION
RALEIGH

STRUCTURAL STEEL GIRDER ELEVATION SPAN 6

-LEFT LANE-

NORTH CAROLINA PROFESSIONAL SEAL 28479 ENGINEER KEVIN G. BAILEY 5-30-13

REVISIONS								SHEET NO.
NO.	BY:	DATE:	NO.	BY:	DATE:			S-113
1			3					TOTAL SHEETS
2			4					836

STV / Ralph Whitehead Associates, Inc.
1000 West Morehead St., Ste. 200
Charlotte, NC 28208
NC License No. F-0991

DRAWN BY : VMW	DATE : 2-13	DESIGN ENGINEER OF RECORD: K. BAILEY	DATE : 5-13
CHECKED BY : KGB	DATE : 3-13		

R:\ustation\Finals\StructuralSteel\Girder Elevation Span 6_Sheet 1 of 17.dgn 8:59:29 PM 5/30/2013

NOTES:

1. FOR CHARPY V-NOTCH TEST, SEE ARTICLE 1072-7 OF THE STANDARD SPECIFICATIONS.
2. FOR ADDITIONAL NOTES, SEE SHEET 1 OF 17.
3. FABRICATOR SHALL ADJUST TOP FLANGE CLIPS AS NECESSARY TO PROVIDE MINIMUM CLEARANCE AS SHOWN.

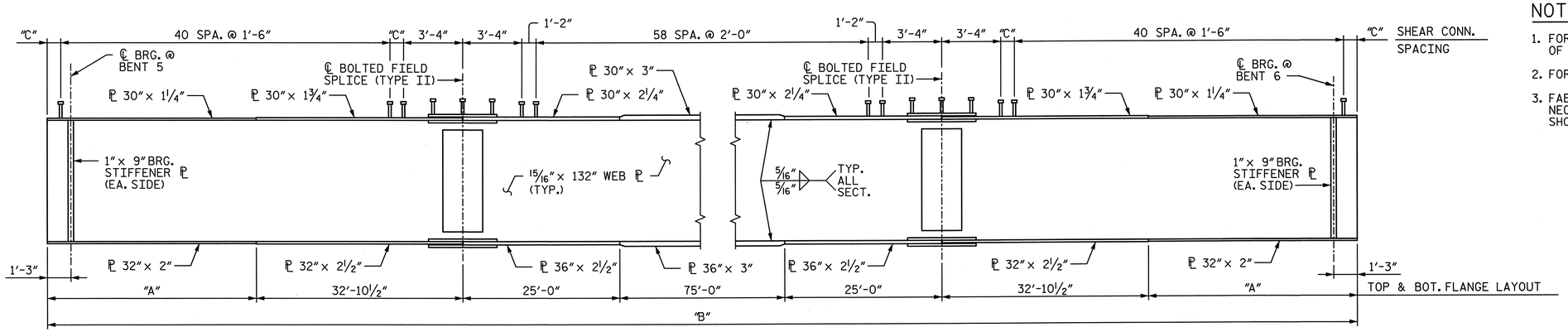

GIRDERS 6 & 7 ELEVATION

(CONNECTOR PLATES AND COMBINATION CONNECTOR/STIFFENER PLATES NOT SHOWN FOR CLARITY. FOR PLACEMENT, SEE FRAMING PLAN)

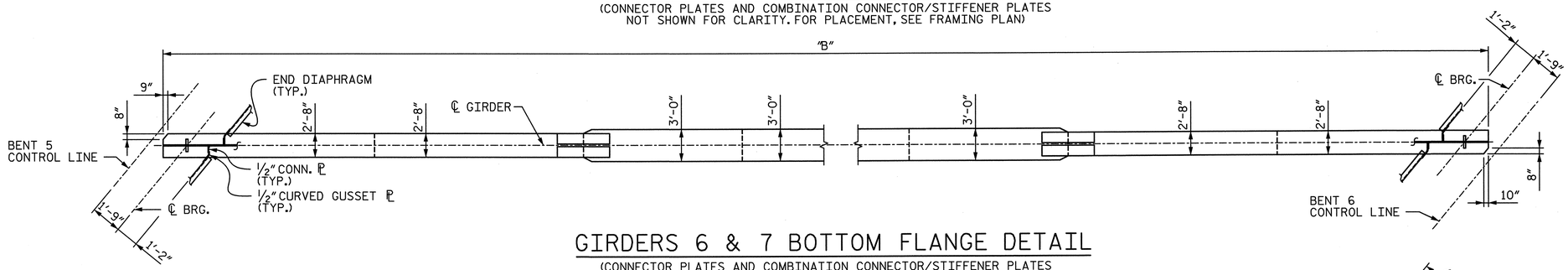

GIRDERS 6 & 7 BOTTOM FLANGE DETAIL

(CONNECTOR PLATES AND COMBINATION CONNECTOR/STIFFENER PLATES NOT SHOWN FOR CLARITY. FOR PLACEMENT, SEE FRAMING PLAN. BOTTOM FLANGE SHOWN SCHEMATICALLY WITHOUT CURVATURE)

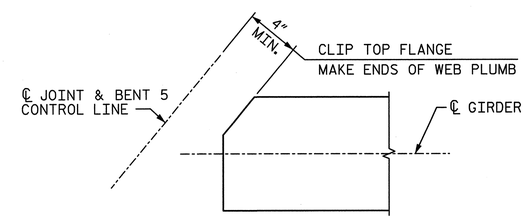

BENT 5
(TYPICAL EA. GIRDER)

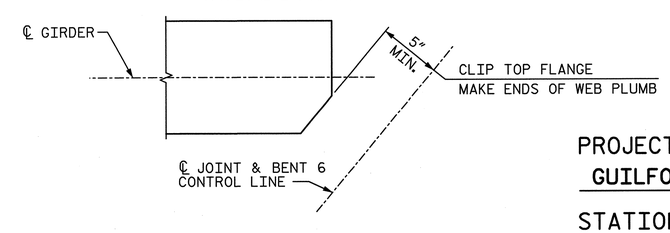

BENT 6
(TYPICAL EA. GIRDER)

TOP FLANGE CLIP DETAILS

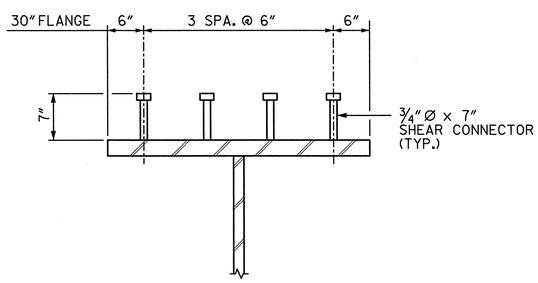

SHEAR CONNECTOR DETAIL

(TYPICAL EXCEPT @ TOP FLANGE SPLICE PLATE, SEE SPAN 6 BOLTED FIELD SPLICE)

GIRDER DIMENSIONS

GDR.	RADIUS	SPAN 6			SHEAR CONNECTORS	
		"A"	"B"	℄ F.S. TO ℄ F.S.	"C"	NO. OF SHEAR CONN.
1	2419'-0"	66'-1½"	257'-3"	125'-0"	1'-4¾"	604
2	2430'-4"	66'-1⅛"	257'-2¼"	125'-0"	1'-4 9/16"	604
3	2441'-8"	66'-1"	257'-2"	125'-0"	1'-4½"	604
4	2453'-0"	33'-2⅜"	257'-1¾"	125'-0"	1'-4 7/16"	604
5	2464'-4"	33'-2½"	257'-2"	125'-0"	1'-4½"	604
6	2475'-8"	33'-2⅝"	257'-2¼"	125'-0"	1'-4 9/16"	604
7	2487'-0"	33'-3"	257'-3"	125'-0"	1'-4¾"	604

NORTH CAROLINA PROFESSIONAL SEAL 28479 ENGINEER KEVIN G. BAILEY 5-30-13

PROJECT NO. U-2524C
GUILFORD COUNTY
STATION: POT 407+73.35 -L-
= POT 29+32.06 -Y4-
SHEET 2 OF 17

STATE OF NORTH CAROLINA
DEPARTMENT OF TRANSPORTATION
RALEIGH

STRUCTURAL STEEL GIRDER ELEVATION SPAN 6

-LEFT LANE-

STV/ Ralph Whitehead Associates, Inc.
1000 West Morehead St., Ste. 200
Charlotte, NC 28208
NC License No. F-0991

REVISIONS						SHEET NO.
NO.	BY:	DATE:	NO.	BY:	DATE:	S-114
1			3			TOTAL SHEETS
2			4			836

DRAWN BY : VMW	DATE : 2-13	DESIGN ENGINEER OF RECORD: K. BAILEY	DATE : 5-13
CHECKED BY : KGB	DATE : 3-13		

5/30/2013 4:55:52 PM R:\ustation\Finals\Structural\SteelGirder Elevation Span 6_Sheet 2 of 17.dgn

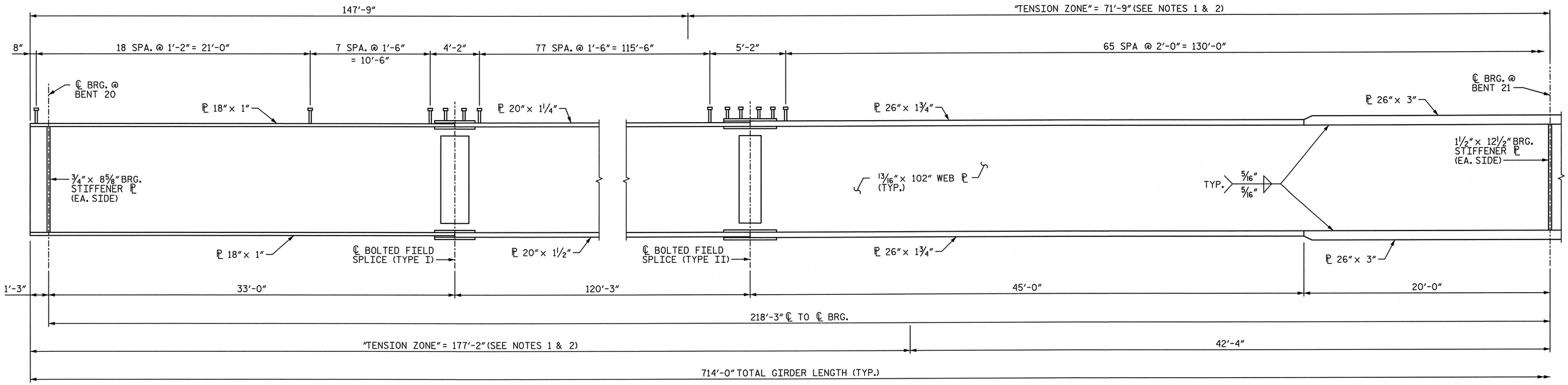

GIRDER ELEVATION

(CONNECTOR PLATES AND TRANSVERSE STIFFENERS NOT SHOWN FOR CLARITY. FOR PLACEMENT, SEE FRAMING PLAN)

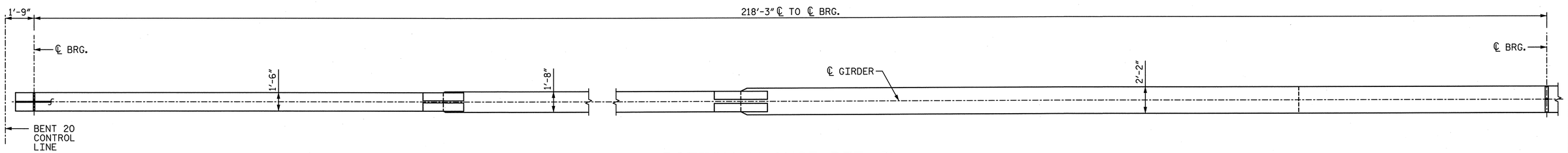

BOTTOM FLANGE DETAIL

(CONNECTOR PLATES AND TRANSVERSE STIFFENERS NOT SHOWN FOR CLARITY. FOR PLACEMENT, SEE FRAMING PLAN)

NOTES:

1. CHARPY V-NOTCH TESTS ARE REQUIRED FOR ALL TOP OR BOTTOM FLANGE PLATES WHICH FALL WITHIN THESE LIMITS, ALL WEB PLATES, AND ALL SPLICE PLATES. IF A PERMITTED SHOP FLANGE SPLICE IS NOT USED, CHARPY V-NOTCH TESTS WILL BE REQUIRED FOR THE ENTIRE FLANGE PLATE. FOR CHARPY V-NOTCH TESTS, SEE ARTICLE 1072-7 OF THE STANDARD SPECIFICATIONS.
2. NO WELDING OF FORMS OR FALSEWORK TO THE TOP FLANGE WILL BE PERMITTED IN THIS REGION.
3. FOR STRUCTURAL STEEL DIAPHRAGM DETAILS, SEE SHEET 10 OF 17.
4. FOR STRUCTURAL STEEL DETAILS AND ADDITIONAL NOTES, SEE SHEETS 11 & 12 OF 17.
5. FOR BOLTED FIELD SPLICE DETAILS, SEE SHEET 14 OF 17.
6. FOR ADDITIONAL INFORMATION, SEE "FRAMING PLAN UNIT G SPANS 21-23".

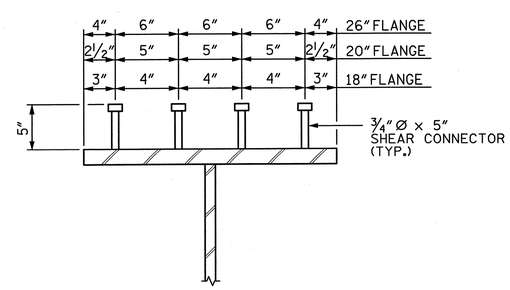

SHEAR CONNECTOR DETAIL

(TYPICAL EXCEPT @ TOP FLANGE SPLICE PLATE, SEE UNIT G BOLTED FIELD SPLICE)

NORTH CAROLINA PROFESSIONAL SEAL 28479 ENGINEER KEVIN G. BAILEY 5-30-13

PROJECT NO. U-2524C

GUILFORD COUNTY

STATION: POT 407+73.35 -L-
= POT 29+32.06 -Y4-

SHEET 3 OF 17

STATE OF NORTH CAROLINA
DEPARTMENT OF TRANSPORTATION
RALEIGH

STRUCTURAL STEEL
GIRDER ELEVATION
UNIT G
SPAN 21
-LEFT LANE-

REVISIONS						SHEET NO.
NO.	BY:	DATE:	NO.	BY:	DATE:	S-115
1			3			TOTAL SHEETS
2			4			836

STV / Ralph Whitehead Associates, Inc.
1000 West Morehead St., Ste. 200
Charlotte, NC 28208
NC License No. F-0991

DRAWN BY : KP	DATE : 9-12	DESIGN ENGINEER OF RECORD: K. BAILEY	DATE : 5-13
CHECKED BY : CJ	DATE : 9-12		

5/30/2013 8:59:25 PM R:\ustation\Finals\Structural\Steel\Girder Elevation Unit G_Sheet 3 of 17.dgn

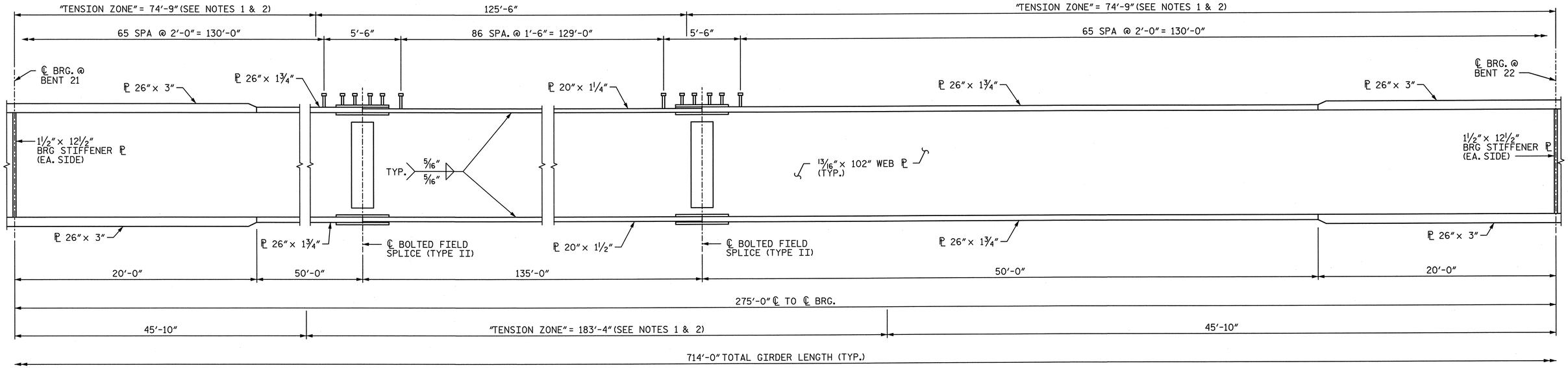

GIRDER ELEVATION

(CONNECTOR PLATES AND TRANSVERSE STIFFENERS NOT SHOWN FOR CLARITY. FOR PLACEMENT, SEE FRAMING PLAN)

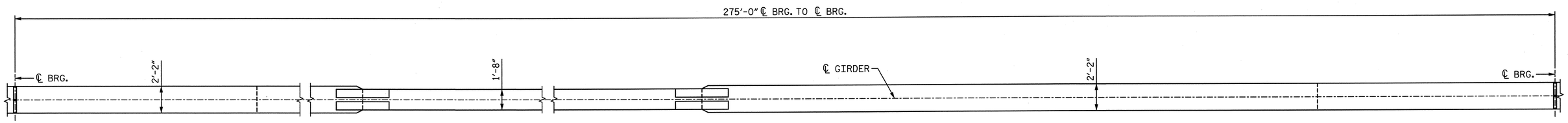

BOTTOM FLANGE DETAIL

(CONNECTOR PLATES AND TRANSVERSE STIFFENERS NOT SHOWN FOR CLARITY. FOR PLACEMENT, SEE FRAMING PLAN)

NOTES:

1. CHARPY V-NOTCH TESTS ARE REQUIRED FOR ALL TOP OR BOTTOM FLANGE PLATES WHICH FALL WITHIN THESE LIMITS, ALL WEB PLATES, AND ALL SPLICE PLATES. IF A PERMITTED SHOP FLANGE SPLICE IS NOT USED, CHARPY V-NOTCH TESTS WILL BE REQUIRED FOR THE ENTIRE FLANGE PLATE. FOR CHARPY V-NOTCH TESTS, SEE ARTICLE 1072-7 OF THE STANDARD SPECIFICATIONS.
2. NO WELDING OF FORMS OR FALSEWORK TO THE TOP FLANGE WILL BE PERMITTED IN THIS REGION.
3. SEE SHEET 3 OF 17 FOR NOTES AND ADDITIONAL INFORMATION.

PROJECT NO. U-2524C
GUILFORD COUNTY
STATION: POT 407+73.35 -L-
= POT 29+32.06 -Y4-
SHEET 4 OF 17

NORTH CAROLINA PROFESSIONAL SEAL 28479 ENGINEER KEVIN G. BAILEY
5-30-13

STATE OF NORTH CAROLINA
DEPARTMENT OF TRANSPORTATION
RALEIGH

STRUCTURAL STEEL
GIRDER ELEVATION
UNIT G
SPAN 22
-LEFT LANE-

REVISIONS						SHEET NO.
NO.	BY:	DATE:	NO.	BY:	DATE:	S-116
1			3			TOTAL SHEETS
2			4			83

STV / Ralph Whitehead Associates, Inc.
1000 West Morehead St., Ste. 200
Charlotte, NC 28208
NC License No. F-0991

DRAWN BY : KP	DATE : 9-12	DESIGN ENGINEER OF RECORD: K. BAILEY	DATE : 5-13
CHECKED BY : CJ	DATE : 9-12		

5/30/2013 8:59:21 PM R:\station\Finals\StructuralSteelGirder Elevation Unit G_Sheet 4 of 17.dgn

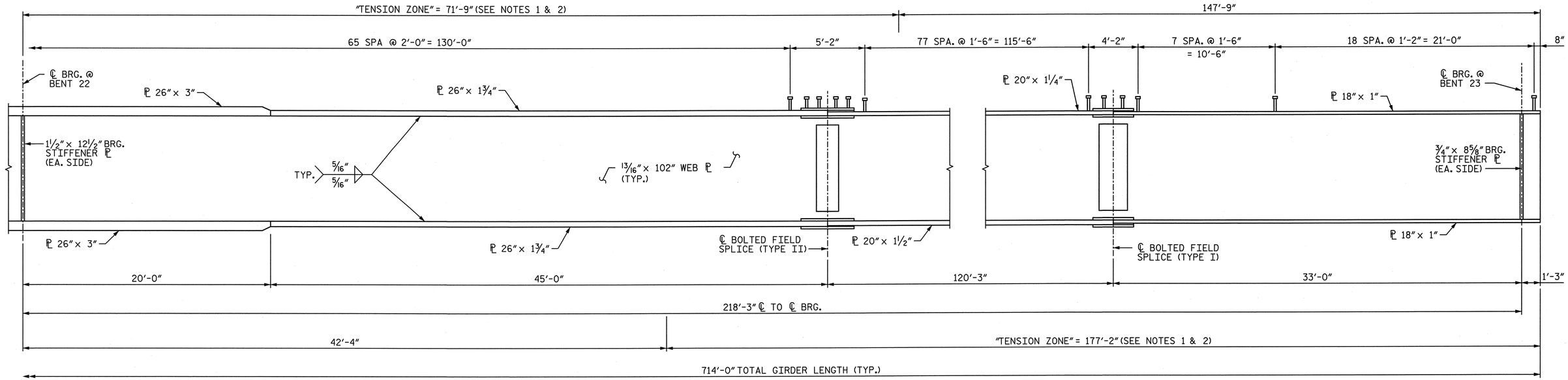

GIRDER ELEVATION

(CONNECTOR PLATES AND TRANSVERSE STIFFENERS NOT SHOWN FOR CLARITY. FOR PLACEMENT, SEE FRAMING PLAN)

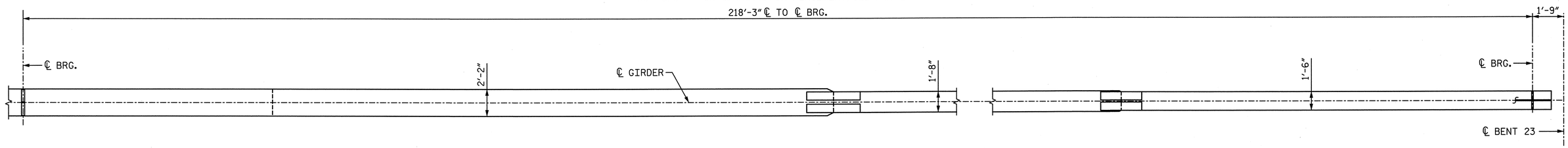

BOTTOM FLANGE DETAIL

(CONNECTOR PLATES AND TRANSVERSE STIFFENERS NOT SHOWN FOR CLARITY. FOR PLACEMENT, SEE FRAMING PLAN)

NOTES:

1. CHARPY V-NOTCH TESTS ARE REQUIRED FOR ALL TOP OR BOTTOM FLANGE PLATES WHICH FALL WITHIN THESE LIMITS, ALL WEB PLATES, AND ALL SPLICE PLATES. IF A PERMITTED SHOP FLANGE SPLICE IS NOT USED, CHARPY V-NOTCH TESTS WILL BE REQUIRED FOR THE ENTIRE FLANGE PLATE. FOR CHARPY V-NOTCH TESTS, SEE ARTICLE 1072-7 OF THE STANDARD SPECIFICATIONS.
2. NO WELDING OF FORMS OR FALSEWORK TO THE TOP FLANGE WILL BE PERMITTED IN THIS REGION.
3. SEE SHEET 3 OF 17 FOR NOTES AND ADDITIONAL INFORMATION AND NOTES.

PROJECT NO. U-2524C
GUILFORD COUNTY
STATION: POT 407+73.35 -L-
= POT 29+32.06 -Y4-
SHEET 5 OF 17

NORTH CAROLINA PROFESSIONAL SEAL 28479 ENGINEER KEVIN G. BAILEY 5-30-13

STATE OF NORTH CAROLINA
DEPARTMENT OF TRANSPORTATION
RALEIGH

STRUCTURAL STEEL
GIRDER ELEVATION
UNIT G
SPAN 23
-LEFT LANE-

DRAWN BY : KP	DATE : 9-12	DESIGN ENGINEER OF RECORD: K. BAILEY	DATE : 5-13
CHECKED BY : CJ	DATE : 9-12		

STV / Ralph Whitehead Associates, Inc.
1000 West Morehead St., Ste. 200
Charlotte, NC 28208
NC License No. F-0991

REVISIONS						SHEET NO.
NO.	BY:	DATE:	NO.	BY:	DATE:	S-117
1			3			TOTAL SHEETS
2			4			836

5/30/2013 8:59:17 PM R:\ustation\Finals\StructuralSteelGirder Elevation Unit G_Sheet 5 of 17.dgn

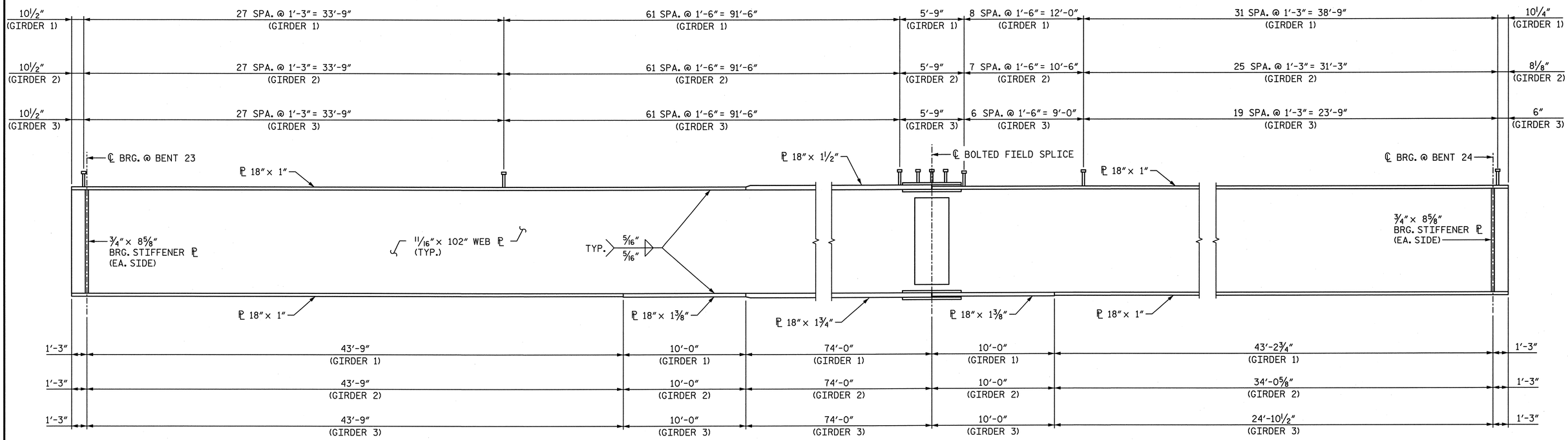

GIRDERS 1-3 ELEVATION

(CONNECTOR PLATES AND COMBINATION CONNECTOR/STIFFENER PLATES NOT SHOWN FOR CLARITY. FOR PLACEMENT, SEE FRAMING PLAN)

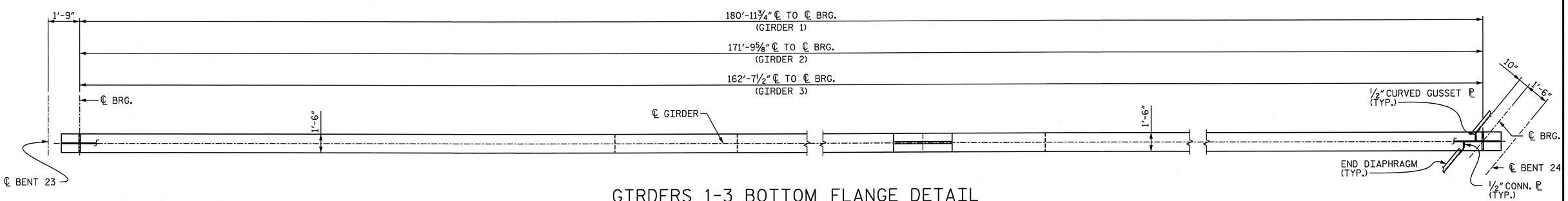

GIRDERS 1-3 BOTTOM FLANGE DETAIL

(CONNECTOR PLATES AND COMBINATION CONNECTOR/STIFFENER PLATES NOT SHOWN FOR CLARITY. FOR PLACEMENT, SEE FRAMING PLAN)

NOTES:

1. A CHARPY V-NOTCH TEST IS REQUIRED FOR WEB PLATES, BOTTOM FLANGE PLATES, BOTTOM FLANGE SPLICE PLATES AND WEB SPLICE PLATES FOR ALL GIRDERS AND IN ACCORDANCE WITH ARTICLE 1072-7 OF THE STANDARD SPECIFICATIONS.
2. FOR STRUCTURAL STEEL DIAPHRAGM DETAILS, SEE SHEET 10 OF 17.
3. FOR STRUCTURAL STEEL DETAILS AND ADDITIONAL NOTES, SEE SHEETS 11 & 12 OF 17.
4. FOR BOLTED FIELD SPLICE DETAILS, SEE SHEET 15 OF 17.
5. FOR ADDITIONAL INFORMATION, SEE "FRAMING PLAN SPAN 24".
6. FOR TOP FLANGE CLIP DETAIL, SEE SHEET 7 OF 17.

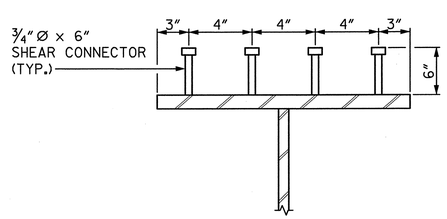

SHEAR CONNECTOR DETAIL

(TYPICAL EXCEPT @ TOP FLANGE SPLICE PLATE, SEE SPAN 24 BOLTED FIELD SPLICE)

PROJECT NO. U-2524C

GUILFORD COUNTY

STATION: POT 407+73.35 -L-
= POT 29+32.06 -Y4-

SHEET 6 OF 17

STATE OF NORTH CAROLINA
DEPARTMENT OF TRANSPORTATION
RALEIGH

STRUCTURAL STEEL GIRDER ELEVATION SPAN 24

-LEFT LANE-

NORTH CAROLINA PROFESSIONAL SEAL 28479 ENGINEER KEVIN G. BAILEY 5-30-13

DRAWN BY : KP	DATE : 10-12	DESIGN ENGINEER OF RECORD: K. BAILEY	DATE : 5-13
CHECKED BY : GK	DATE : 11-12		

STV / Ralph Whitehead Associates, Inc.
1000 West Morehead St., Ste. 200
Charlotte, NC 28208
NC License No. F-0991

REVISIONS

NO.	BY:	DATE:	NO.	BY:	DATE:
1			3		
2			4		

SHEET NO. S-118

TOTAL SHEETS 83

R:\ustation\Finals\Structural Steel Girder Elevation Span 24_Sheet 6 of 17.dgn 8:59:13 PM 5/30/2013

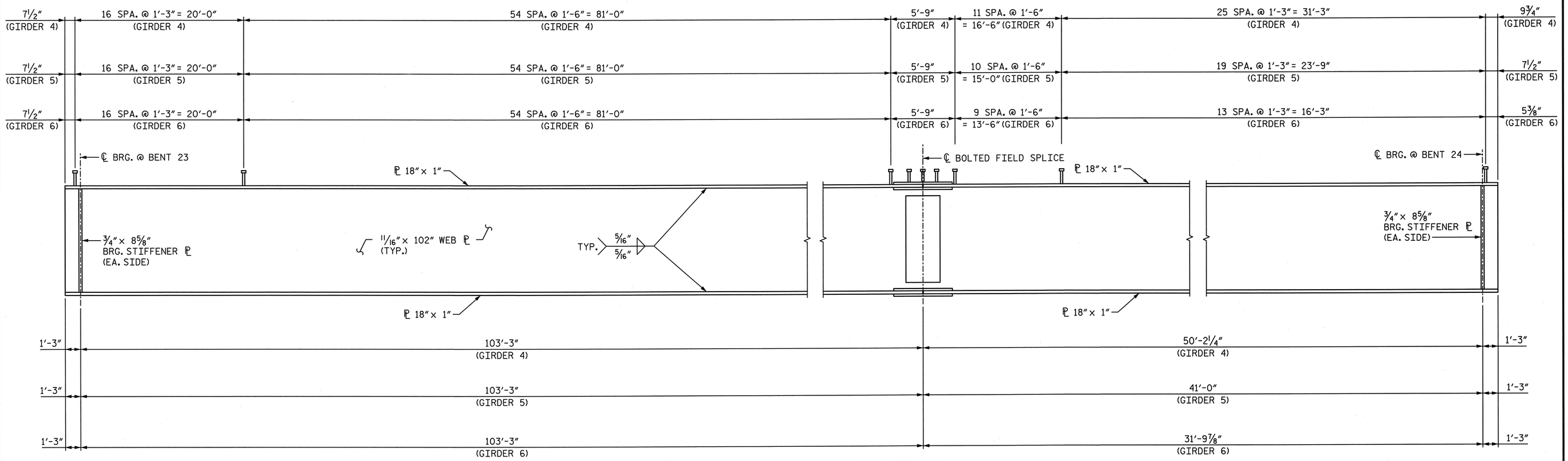

GIRDERS 4-6 ELEVATION

(CONNECTOR PLATES AND COMBINATION CONNECTOR/STIFFENER PLATES NOT SHOWN FOR CLARITY. FOR PLACEMENT, SEE FRAMING PLAN)

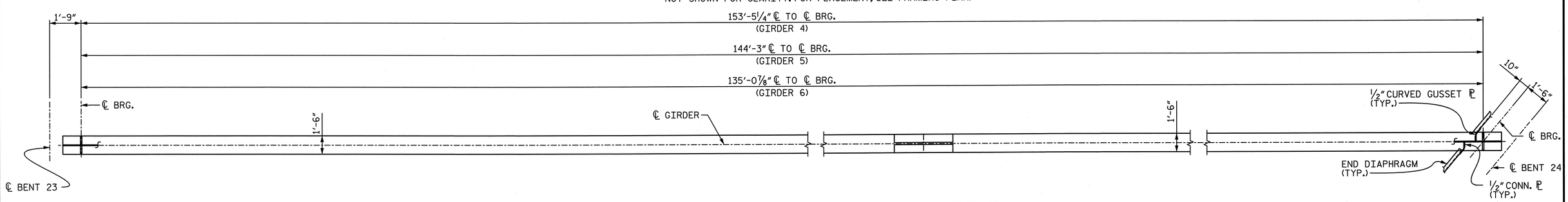

GIRDERS 4-6 BOTTOM FLANGE DETAIL

(CONNECTOR PLATES AND COMBINATION CONNECTOR/STIFFENER PLATES NOT SHOWN FOR CLARITY. FOR PLACEMENT, SEE FRAMING PLAN)

PROJECT NO. U-2524C

GUILFORD COUNTY

STATION: POT 407+73.35 -L-
= POT 29+32.06 -Y4-

SHEET 7 OF 17

NOTES:

1. SEE SHEET 6 OF 17 FOR NOTES AND ADDITIONAL DETAILS.
2. FABRICATOR SHALL ADJUST TOP FLANGE CLIPS AS NECESSARY TO PROVIDE MINIMUM CLEARANCE AS SHOWN.

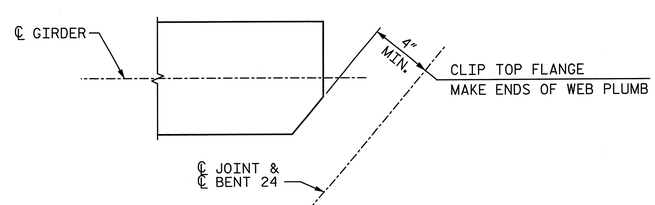

TOP FLANGE CLIP DETAIL

(TYP. EACH GIRDER)

NORTH CAROLINA PROFESSIONAL SEAL 28479 ENGINEER KEVIN G. BAILEY 5-30-13

STATE OF NORTH CAROLINA
DEPARTMENT OF TRANSPORTATION
RALEIGH

STRUCTURAL STEEL
GIRDER ELEVATION
SPAN 24

-LEFT LANE-

REVISIONS						SHEET NO.
NO.	BY:	DATE:	NO.	BY:	DATE:	S-119
1			3			TOTAL SHEETS
2			4			836

STV / Ralph Whitehead Associates, Inc.
1000 West Morehead St., Ste. 200
Charlotte, NC 28208
NC License No. F-0991

DRAWN BY : KP	DATE : 10-12	DESIGN ENGINEER OF RECORD: K. BAILEY	DATE : 5-13
CHECKED BY : GK	DATE : 11-12		

5/30/2013 4:56:14 PM R:\ustation\Finals\Structural Steel Girder Elevation Span 24_Sheet 7 of 17.dgn

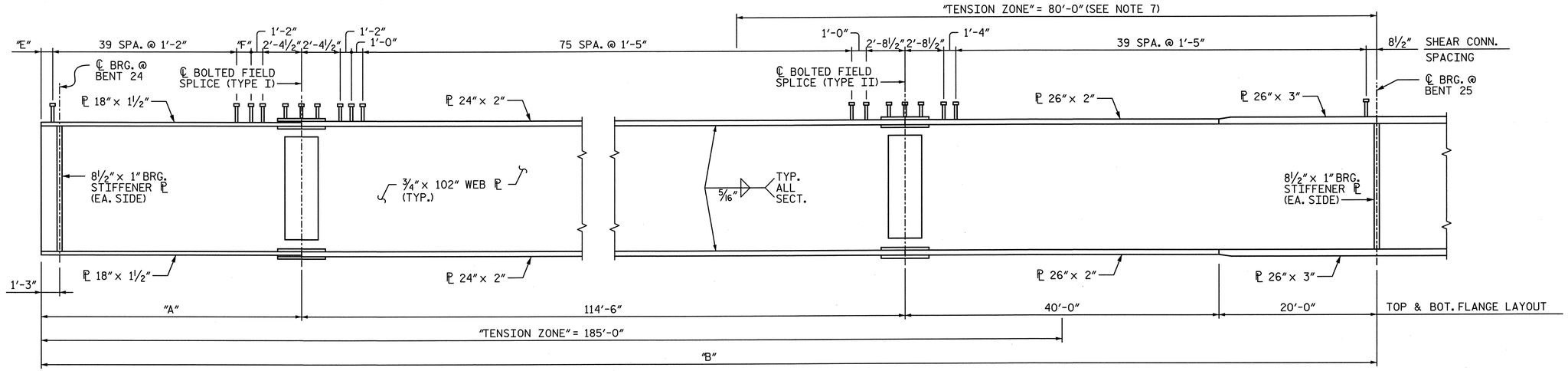

GIRDER ELEVATION

(CONNECTOR PLATES AND COMBINATION CONNECTOR/STIFFENER PLATES NOT SHOWN FOR CLARITY. FOR PLACEMENT, SEE FRAMING PLAN)

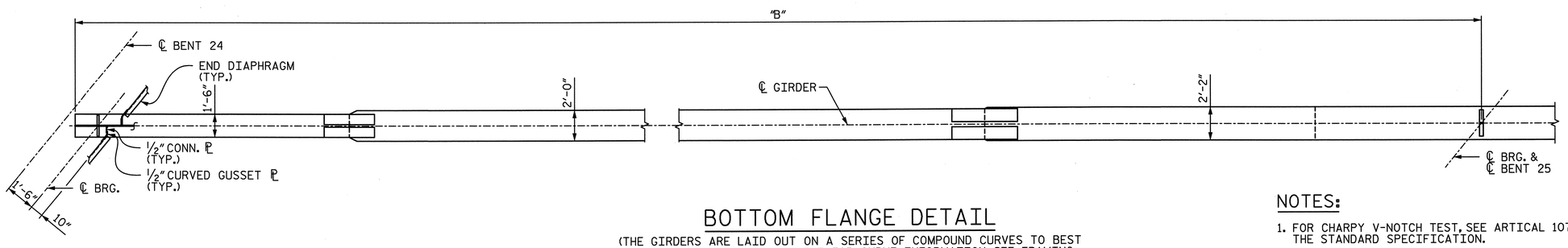

BOTTOM FLANGE DETAIL

(THE GIRDERS ARE LAID OUT ON A SERIES OF COMPOUND CURVES TO BEST FOLLOW THE SPIRAL ALIGNMENT. FOR CURVE INFORMATION, SEE FRAMING PLAN. CONNECTOR PLATES AND COMBINATION CONNECTOR/STIFFENER PLATES NOT SHOWN FOR CLARITY. FOR PLACEMENT, SEE FRAMING PLAN BOTTOM FLANGE SHOWN SCHEMATICALLY WITHOUT CURVATURE)

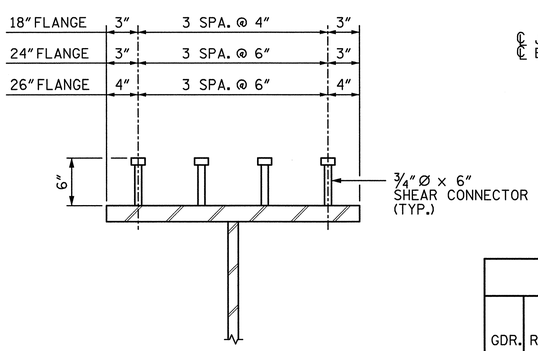

SHEAR CONNECTOR DETAIL

(TYPICAL EXCEPT @ TOP FLANGE SPLICE PLATE, SEE UNIT H BOLTED FIELD SPLICE)

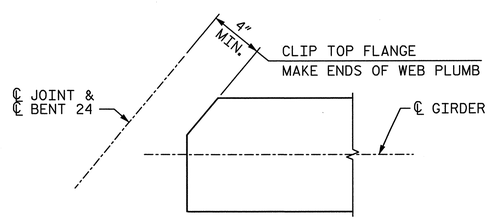

TOP FLANGE CLIP DETAIL

(TYP. EACH GIRDER)

GIRDER DIMENSIONS

GDR.	RADIUS	UNIT H "A"	UNIT H ℄ F.S TO ℄ F.S.	UNIT H ℄ F.S TO ℄ F.S. AT BT 25	UNIT H ℄ F.S. TO ℄ F.S.	UNIT H "C"	SPAN 25 "B"	SPAN 26 "D"	SHEAR CONNECTORS "E"	SHEAR CONNECTORS "F"	SHEAR CONNECTORS "G"	SHEAR CONNECTORS "H"	SHEAR CONNECTORS NO. OF SHEAR CONN.
1	▲	50'-1 7/8"	114'-6"	120'-0"	114'-6"	50'-1 13/16"	224'-7 7/8"	224'-7 13/16"	6 11/16"	6 11/16"	6 11/16"	6 5/8"	1344
2	▲	50'-4 15/16"	114'-6"	120'-0"	114'-6"	50'-7 1/16"	224'-10 15/16"	225'-1 1/16"	8 3/16"	8 1/4"	9 5/16"	9 1/4"	1344
3	▲	50'-8"	114'-6"	120'-0"	114'-6"	51'-0 5/16"	225'-2"	225'-6 5/16"	9 3/4"	9 3/4"	11 15/16"	11 7/8"	1344
4	▲	50'-11 1/16"	114'-6"	120'-0"	114'-6"	51'-5 1/2"	225'-5 1/16"	225'-11 1/2"	11 1/4"	11 5/16"	1'-2 1/2"	1'-2 1/2"	1344
5	▲	51'-2"	114'-6"	120'-0"	114'-6"	51'-10 5/8"	225'-8"	226'-4 5/8"	1'-0 3/4"	1'-0 3/4"	10 1/16"	10 1/16"	1348
6	▲	51'-4 13/16"	114'-6"	120'-0"	114'-6"	52'-3 11/16"	225'-10 13/16"	226'-9 11/16"	1'-2 1/8"	1'-2 3/16"	1'-0 5/8"	1'-0 9/16"	1348

▲ RADIUS VARIES ALONG LENGTH OF GIRDER. SEE FRAMING PLAN FOR LIMITS OF HORIZONTAL CURVES & RADII.

NOTES:

1. FOR CHARPY V-NOTCH TEST, SEE ARTICAL 1072-7 OF THE STANDARD SPECIFICATION.
2. FOR STRUCTURAL STEEL DIAPHRAGM DETAILS, SEE SHEET 10 OF 17.
3. FOR STRUCTURAL STEEL DETAILS AND ADDITIONAL NOTES, SEE SHEETS 11 & 12 OF 17.
4. FOR BOLTED FIELD SPLICE DETAILS, SEE SHEET 16 OF 17.
5. FOR ADDITIONAL INFORMATION, SEE "FRAMING PLAN UNIT H" SHEETS.
6. FABRICATOR SHALL ADJUST TOP FLANGE CLIPS AS NECESSARY TO PROVIDE MINIMUM CLEARANCE AS SHOWN.
7. NO WELDING OF FORMS OR FALSEWORK TO THE TOP FLANGE WILL BE PERMITTED IN THIS REGION.

PROJECT NO. U-2524C
GUILFORD COUNTY
STATION: POT 407+73.35 -L-
= POT 29+32.06 -Y4-

SHEET 8 OF 17

NORTH CAROLINA PROFESSIONAL SEAL 28479 ENGINEER KEVIN G. BAILEY 6-7-13

STATE OF NORTH CAROLINA
DEPARTMENT OF TRANSPORTATION
RALEIGH

STRUCTURAL STEEL
GIRDER ELEVATION
UNIT H
SPAN 25
-LEFT LANE-

REVISIONS NO.	BY:	DATE:	NO.	BY:	DATE:
1			3		
2			4		

SHEET NO. S-120
TOTAL SHEETS 836

STV / Ralph Whitehead Associates, Inc.
1000 West Morehead St. Ste. 200
Charlotte, NC 28208
NC License No. F-0991

DRAWN BY : VMW DATE : 2-13
CHECKED BY : TRL DATE : 2-13
DESIGN ENGINEER OF RECORD: K. BAILEY DATE : 5-13

6/7/2013 10:33:45 AM R:\ustation\Finals\Structural Steel\Girder Elevation Unit H_Sheet 8 of 17.dgn

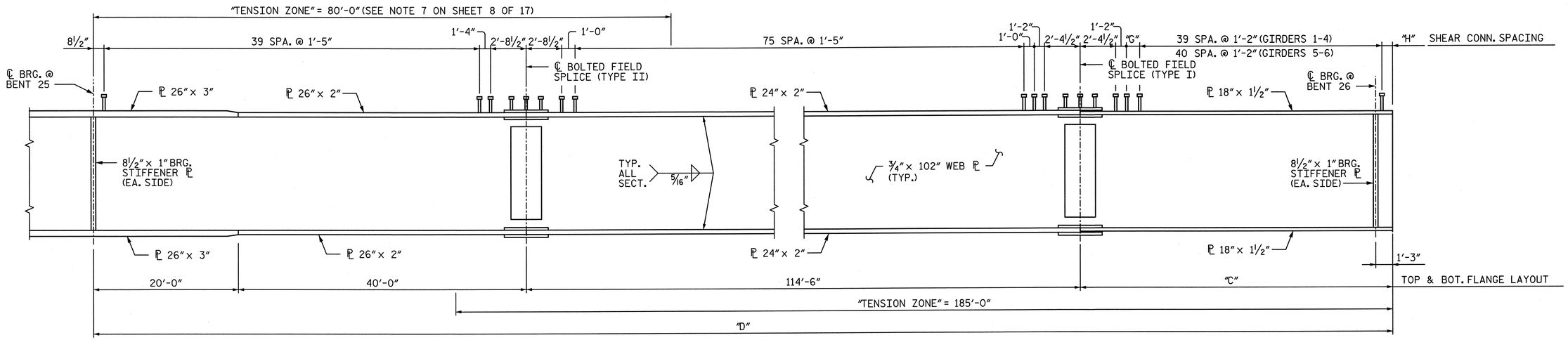

GIRDER ELEVATION

(CONNECTOR PLATES AND COMBINATION CONNECTOR/STIFFENER PLATES NOT SHOWN FOR CLARITY. FOR PLACEMENT, SEE FRAMING PLAN)

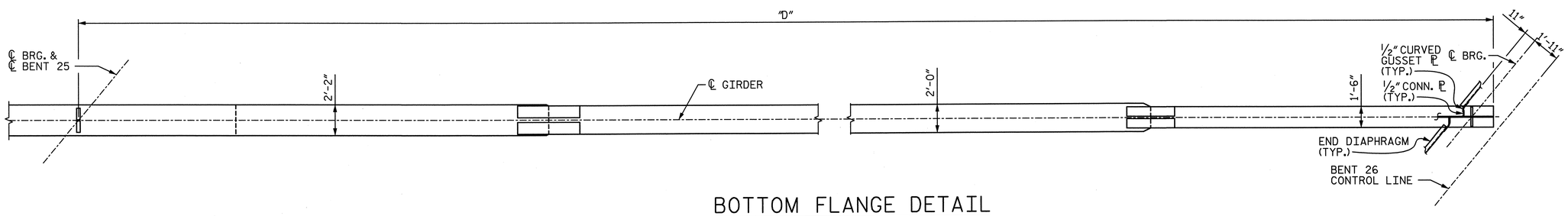

BOTTOM FLANGE DETAIL

(THE GIRDERS ARE LAID OUT ON A SERIES OF COMPOUND CURVES TO BEST FOLLOW THE SPIRAL ALIGNMENT. FOR CURVE INFORMATION, SEE FRAMING PLAN. CONNECTOR PLATES AND COMBINATION CONNECTOR/STIFFENER PLATES NOT SHOWN FOR CLARITY. FOR PLACEMENT, SEE FRAMING PLAN BOTTOM FLANGE SHOWN SCHEMATICALLY WITHOUT CURVES)

NOTES:

1. FOR CHARPY V-NOTCH TEST, SEE ARTICAL 1072-7 OF THE STANDARDS SPECIFICATION.
2. SEE SHEET 8 OF 17 FOR NOTES AND ADDITIONAL DETAILS.

PROJECT NO. U-2524C
GUILFORD COUNTY
STATION: POT 407+73.35 -L-
= POT 29+32.06 -Y4-

SHEET 9 OF 17

NORTH CAROLINA PROFESSIONAL SEAL 28479 ENGINEER KEVIN G. BAILEY 5-30-13

STATE OF NORTH CAROLINA
DEPARTMENT OF TRANSPORTATION
RALEIGH

STRUCTURAL STEEL
GIRDER ELEVATION
UNIT H
SPAN 26
-LEFT LANE-

STV/Ralph Whitehead Associates, Inc.
1000 West Morehead St., Ste. 200
Charlotte, NC 28208
NC License No. F-0991

REVISIONS						
NO.	BY:	DATE:	NO.	BY:	DATE:	
1			3			
2			4			

SHEET NO. S-121
TOTAL SHEETS 83

DRAWN BY : VMW DATE : 2-13
CHECKED BY : TRL DATE : 2-13
DESIGN ENGINEER OF RECORD: K. BAILEY DATE : 5-13

5/30/2013 4:56:21 PM R:\ustation\Finals\Structural Steel Girder Elevation Unit H.Sheet 9 of 17.dgn

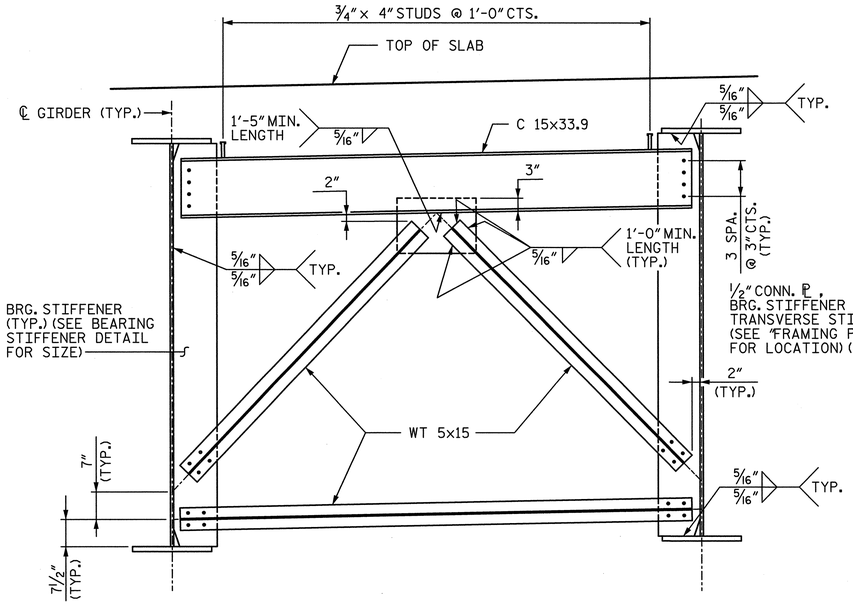

END DIAPHRAGM
(BENTS 20 & 23)

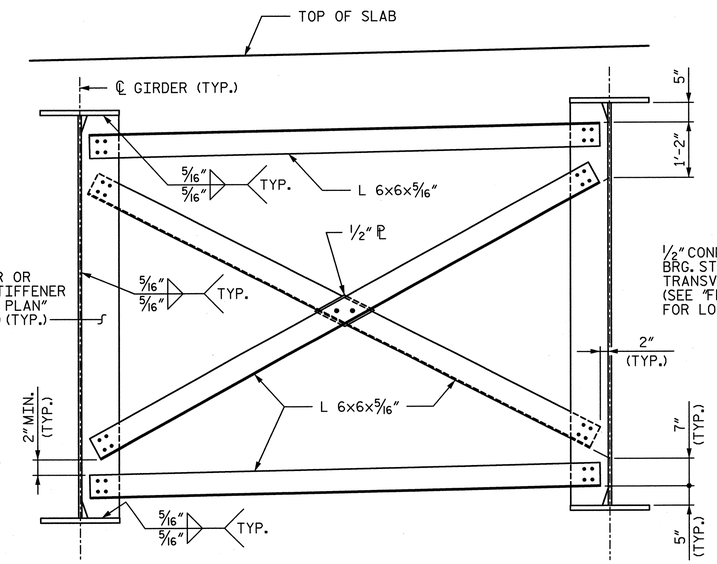

INTERMEDIATE DIAPHRAGM
(SPANS 21-24)
(CONNECTOR PLATES SHOWN, OTHERS SIMILAR)

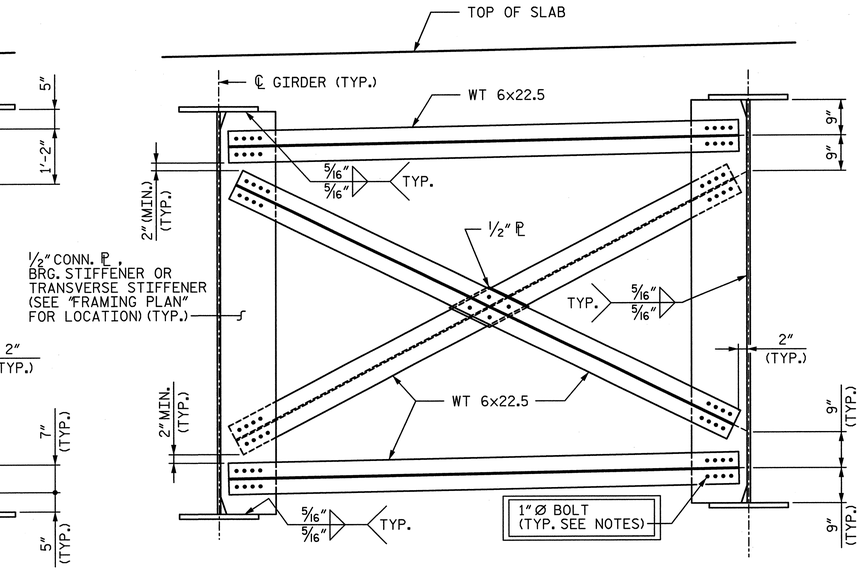

INTERMEDIATE DIAPHRAGM
(SPANS 6, 25, & 26)
(CONNECTOR PLATES SHOWN, OTHERS SIMILAR)

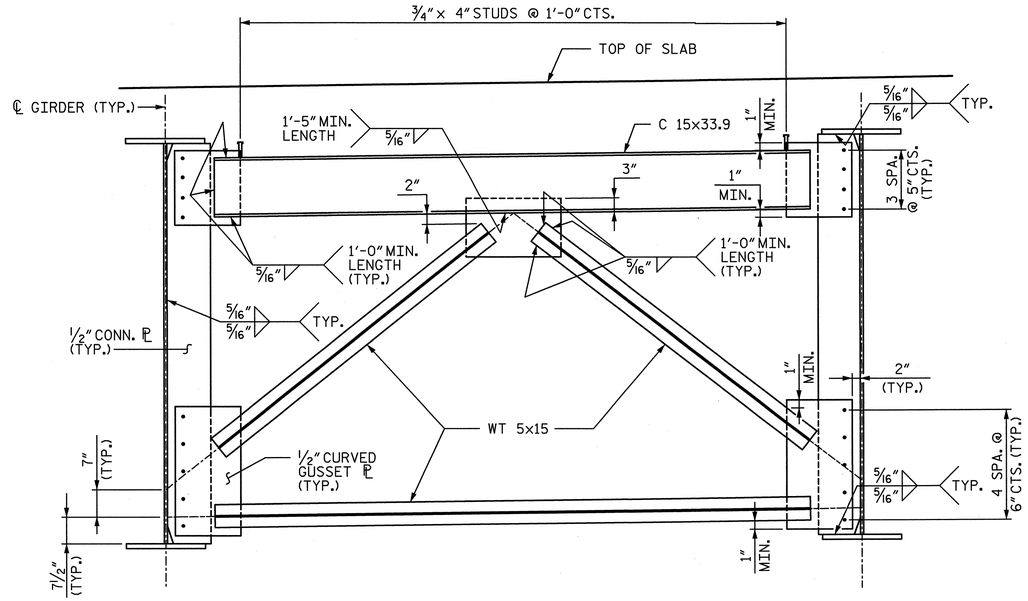

END DIAPHRAGM
(BENT 24, SPAN 24)

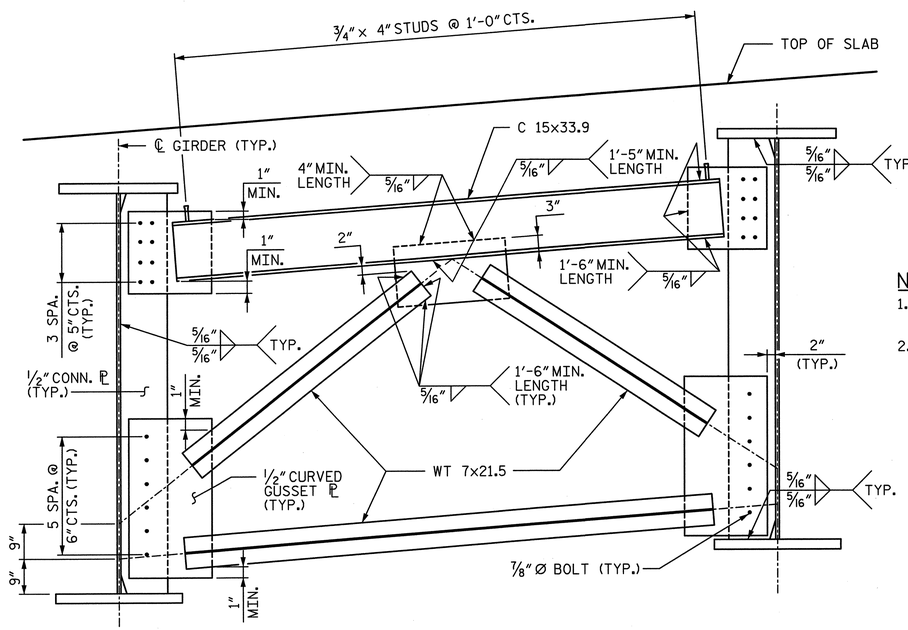

END DIAPHRAGM
(BENTS 5 & 6)
(BENT 24, SPAN 25 & BENT 26)

NOTES:

1. FOR STRUCTURAL STEEL DETAILS AND NOTES, SEE SHEETS 11 & 12 OF 17.
2. CONTRACTOR'S ATTENTION IS CALLED TO THE 1" Ø BOLT REQUIREMENT FOR SPANS 6, 25, & 26.

PROJECT NO. U-2524C
GUILFORD COUNTY
STATION: POT 407+73.35 -L-
= POT 29+32.06 -Y4-
SHEET 10 OF 17

NORTH CAROLINA PROFESSIONAL SEAL 28479 ENGINEER KEVIN G. BAILEY 5-30-13

STATE OF NORTH CAROLINA
DEPARTMENT OF TRANSPORTATION
RALEIGH

STRUCTURAL STEEL DIAPHRAGM DETAILS

-LEFT LANE-

REVISIONS						SHEET NO.
NO.	BY:	DATE:	NO.	BY:	DATE:	S-122
1			3			TOTAL SHEETS
2			4			836

STV / Ralph Whitehead Associates, Inc.
1000 West Morehead St., Ste. 200
Charlotte, NC 28208
NC License No. F-0991

DRAWN BY : VMW	DATE : 2-13	DESIGN ENGINEER OF RECORD: K. BAILEY	DATE : 5-13
CHECKED BY : TRL/KGB	DATE : 4-13		

5/30/2013 4:56:26 PM R:\station\Finals\Structural Steel Diaphram Details_Sheet 10 of 17.dgn

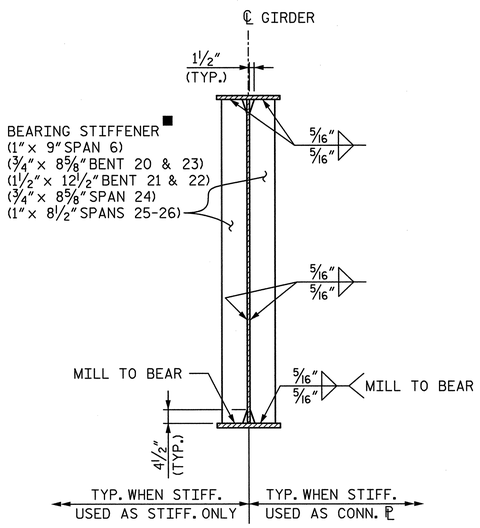

BEARING STIFFENER DETAIL

■ INCREASE BEARING STIFFENER WIDTH AS REQUIRED WHEN USED AS A CONNECTOR PLATE. INCREASE BEARING STIFFENER THICKNESS AS REQUIRED TO MAINTAIN WIDTH TO THICKNESS RATIO NO LARGER THAN 10.5.

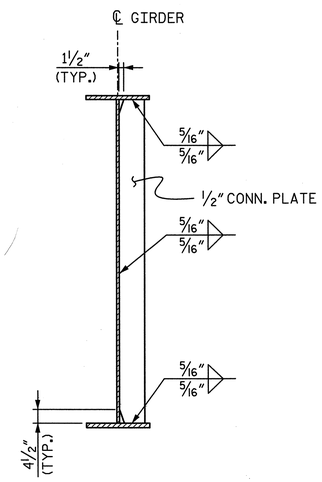

CONNECTOR PLATE DETAIL

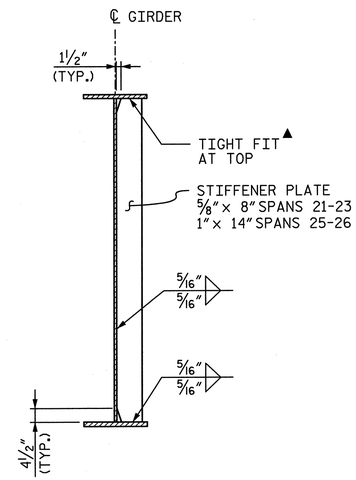

TRANSVERSE STIFFENER PLATE DETAIL

(TOP FLANGE IN TENSION)

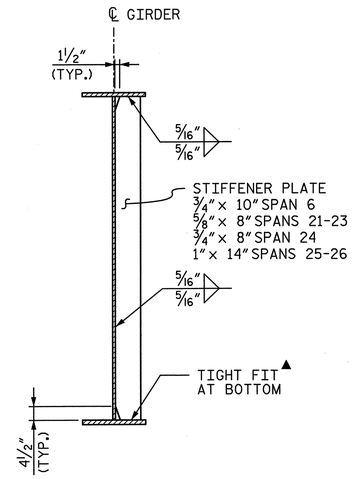

TRANSVERSE STIFFENER PLATE DETAIL

(BOTTOM FLANGE IN TENSION)

▲ IF TRANSVERSE STIFFENERS ARE USED FOR CONNECTOR PLATES, WELD TOP & BOTTOM OF STIFFENERS TO FLANGES. INCREASE STIFFENER WIDTH AS REQUIRED WHEN USED AS A CONNECTOR PLATE. INCREASE STIFFENER THICKNESS AS REQUIRED TO MAINTAIN WIDTH TO THICKNESS RATIO NO LARGER THAN 14.0.

STRUCTURAL STEEL NOTES:

1. ALL STRUCTURAL STEEL SHALL BE AASHTO M270, GRADE 50W AND PAINTED IN ACCORDANCE WITH SYSTEM 4 OF ARTICLE 442-8 OF THE STANDARD SPECIFICATIONS UNLESS OTHERWISE NOTED ON THE PLANS.
2. ALL DIMENSIONS SHOWN ARE HORIZONTAL OR VERTICAL, UNLESS OTHERWISE NOTED.
3. FIELD CONNECTIONS SHALL BE ⅞" DIA. HIGH STRENGTH BOLTS UNLESS OTHERWISE NOTED.
4. FIELD CONNECTIONS FOR INTERMEDIATE DIAPHRAGMS IN SPANS 6, 25, & 26 SHALL BE 1" DIA. HIGH STRENGTH BOLTS. ERECTION SHOP DRAWINGS SHALL CLEARLY DESIGNATE THIS REQUIREMENT.
5. STIFFENERS ARE NOT REQUIRED ON THE OUTSIDE OF EXTERIOR BEAMS.
6. BEARING STIFFENERS ARE TO BE PLACED NORMAL TO THE WEB OF THE GIRDER AND SHALL BE PLUMB.
7. PERMITTED FLANGE AND WEB SHOP SPLICES SHALL NOT BE LOCATED WITHIN 15 FEET OF MAXIMUM DEAD LOAD DEFLECTION (NOR WITHIN 15 FEET OF INTERMEDIATE BEARINGS OF CONTINUOUS UNITS). KEEP 2 FEET MINIMUM BETWEEN WEB AND FLANGE SHOP SPLICES. KEEP 6" MINIMUM BETWEEN CONNECTOR PLATE OR TRANSVERSE STIFFENER WELDS AND WEB OR FLANGE SHOP SPLICES.
8. CONNECTORS ON GIRDERS MAY BE SHIFTED UP TO 1" IF NECESSARY TO CLEAR FLANGE SPLICE WELD.
9. TENSION ON THE AASHTO M164 BOLTS SHALL BE CALIBRATED USING DIRECT TENSION INDICATOR WASHERS IN ACCORDANCE WITH ARTICLE 440-8 OF THE STANDARD SPECIFICATIONS.
10. END OF BEAMS AND GIRDERS SHALL BE PLUMB.
11. BEARING STIFFENER MAY REQUIRE COPING IF WIDER THAN BOTTOM FLANGE.
12. FABRICATORS SHALL DETAIL DIAPHRAGM MEMBERS AND CONNECTIONS FOR FULL DEAD LOAD FIT UP. GIRDERS SHALL BE PLUMB AFTER FULL AMOUNT OF DEAD LOAD IS APPLIED.
13. HEAT CURVING OF THE STEEL GIRDERS IN ACCORDANCE WITH THE STANDARD SPECIFICATIONS IS ALLOWED.

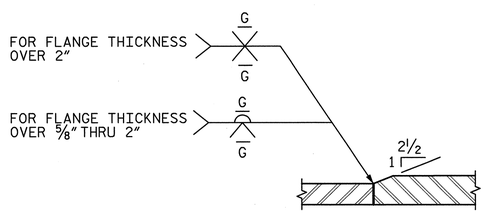

ELEVATION FLANGE

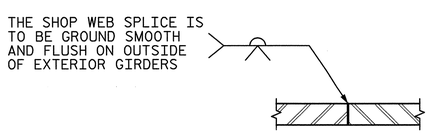

PLAN-WEB

(UNIFORM THICKNESS)

SHOP SPLICE DETAILS

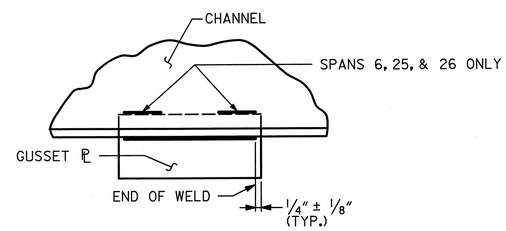

TYPICAL GUESSET PLATE CONNECTION

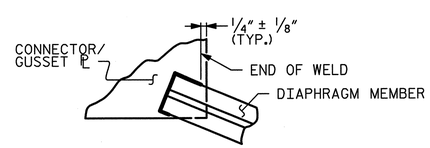

TYPICAL DIAPHRAGM MEMBER CONNECTOR/GUSSET PLATE CONNECTION

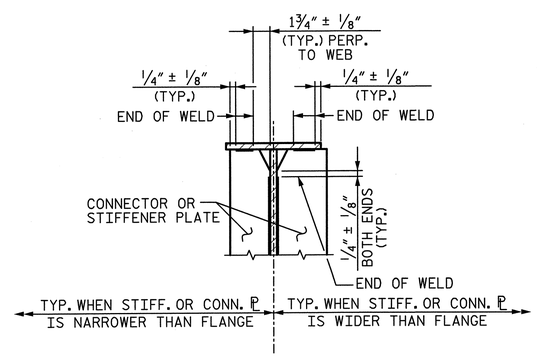

TYPICAL STIFFENER OR CONNECTOR PLATE CONNECTIONS

WELD TERMINATION DETAILS

PROJECT NO. U-2524C
GUILFORD COUNTY
STATION: POT 407+73.35 -L-
= POT 29+32.06 -Y4-
SHEET 11 OF 17

NORTH CAROLINA PROFESSIONAL SEAL 28479 ENGINEER KEVIN G. BAILEY
5-30-13

STATE OF NORTH CAROLINA
DEPARTMENT OF TRANSPORTATION
RALEIGH

STRUCTURAL STEEL DETAILS

-LEFT LANE-

REVISIONS						SHEET NO.
NO.	BY:	DATE:	NO.	BY:	DATE:	S-123
1			3			TOTAL SHEETS
2			4			836

STV / Ralph Whitehead Associates, Inc.
1000 West Morehead St., Ste. 200
Charlotte, NC 28208
NC License No. F-0991

DRAWN BY : MR DATE : 8-12
CHECKED BY : GK/TJT DATE : 4-13
DESIGN ENGINEER OF RECORD: K. BAILEY DATE : 5-13

5/30/2013 4:56:30 PM R:\station\Finals\Structural\SteelDetails_Sheet 11of 17.dgn

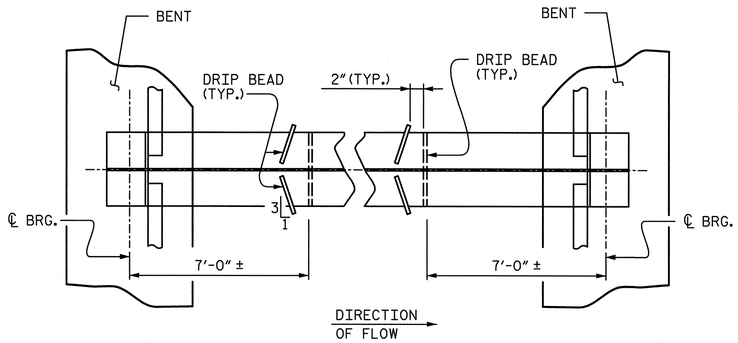

PART PLAN - BOTTOM FLANGE SCHEMATIC

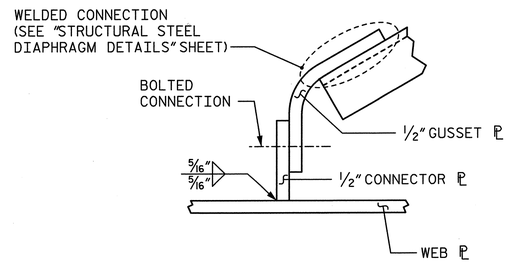

WELD DETAIL FOR CURVED GUSSET ℙ

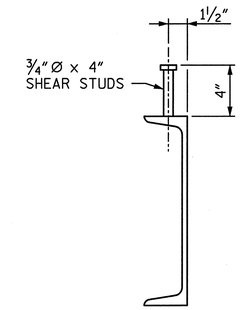

END DIAPHRAGM SHEAR STUD DETAILS

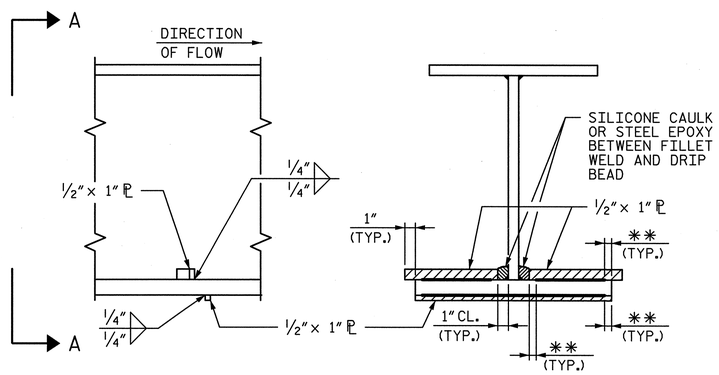

SECTION

VIEW A-A

** SEE "WELD TERMINATION DETAILS" ON SHEET 11 OF 17

DRIP BEAD DETAILS

PROJECT NO. U-2524C

GUILFORD COUNTY

STATION: POT 407+73.35 -L-
= POT 29+32.06 -Y4-

SHEET 12 OF 17

STATE OF NORTH CAROLINA
DEPARTMENT OF TRANSPORTATION
RALEIGH

STRUCTURAL STEEL DETAILS

-LEFT LANE-

NORTH CAROLINA PROFESSIONAL SEAL 28479 ENGINEER KEVIN G. BAILEY
5-30-13

STV / Ralph Whitehead Associates, Inc.
1000 West Morehead St., Ste. 200
Charlotte, NC 28208
NC License No. F-0991

REVISIONS							
NO.	BY:	DATE:	NO.	BY:	DATE:		
1			3				
2			4				

SHEET NO. S-124

TOTAL SHEETS 836

DRAWN BY : MR	DATE : 8-12	DESIGN ENGINEER OF RECORD: K. BAILEY	DATE : 5-13
CHECKED BY : GK/TJT	DATE : 4-13		

5/30/2013 8:59:08 PM R:\ustation\Finals\StructuralSteelDetails_Sheet 12 of 17.dgn

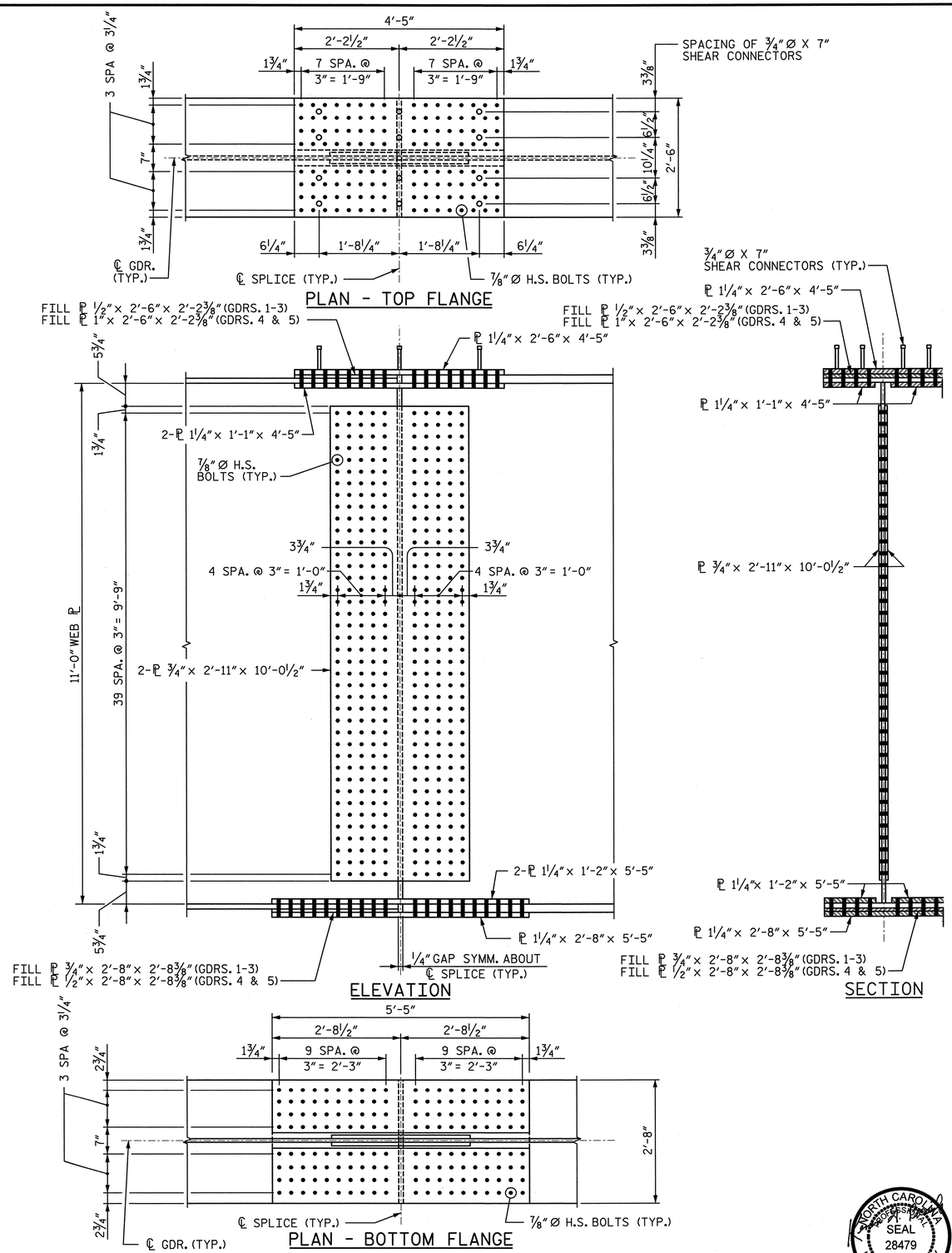

BOLTED FIELD SPLICE - TYPE I

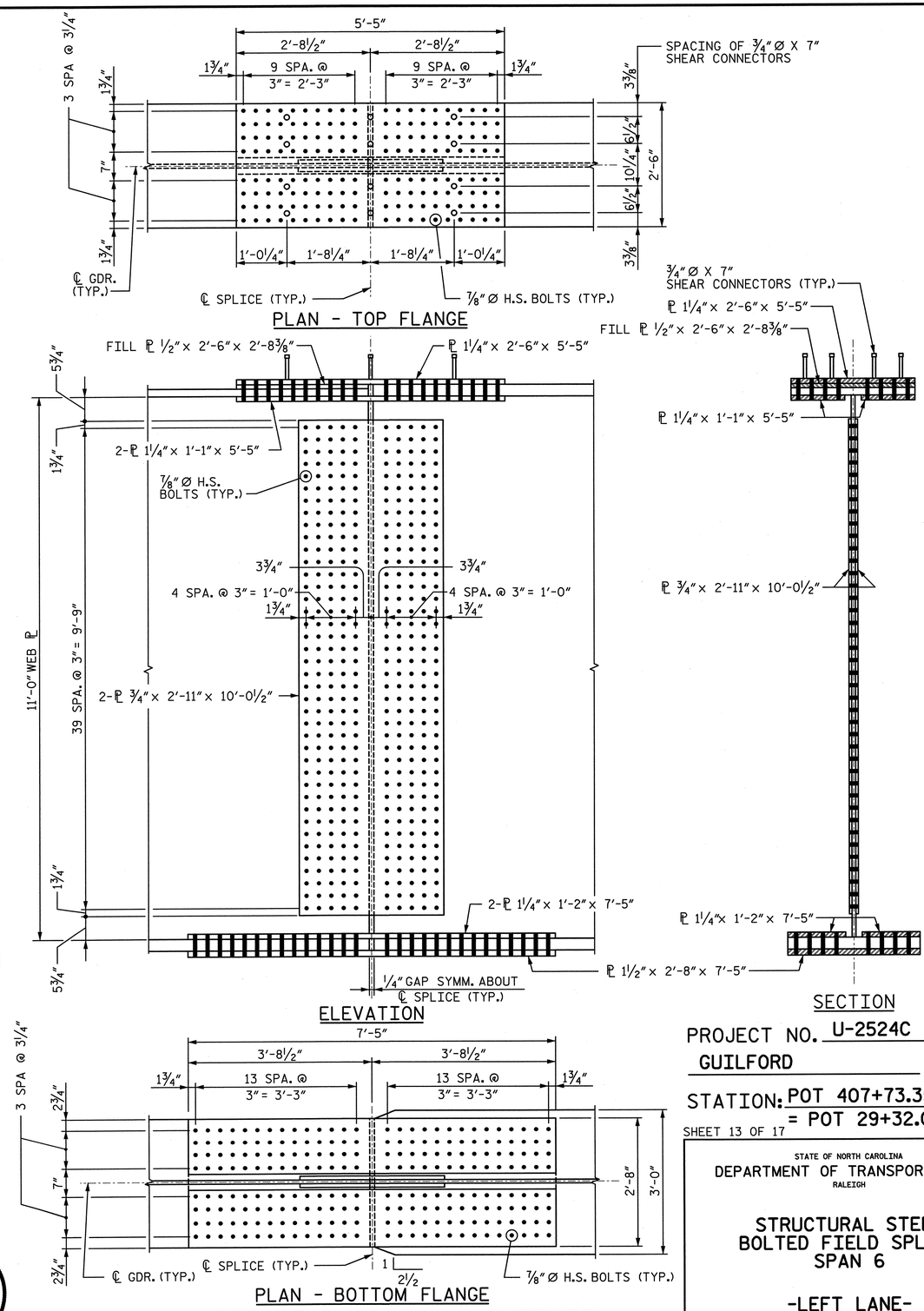

BOLTED FIELD SPLICE - TYPE II

PROJECT NO. U-2524C

GUILFORD COUNTY

STATION: POT 407+73.35 -L-
= POT 29+32.06 -Y4-

SHEET 13 OF 17

STATE OF NORTH CAROLINA
DEPARTMENT OF TRANSPORTATION
RALEIGH

STRUCTURAL STEEL
BOLTED FIELD SPLICE
SPAN 6

-LEFT LANE-

NORTH CAROLINA PROFESSIONAL SEAL 28479 ENGINEER KEVIN G. BAILEY 5-30-13

DRAWN BY : VMW	DATE : 2-13	DESIGN ENGINEER OF RECORD: K. BAILEY	DATE : 5-13
CHECKED BY : KGB	DATE : 3-13		

STV / Ralph Whitehead Associates, Inc.
1000 West Morehead St., Ste. 200
Charlotte, NC 28208
NC License No. F-0991

REVISIONS

NO.	BY:	DATE:	NO.	BY:	DATE:
1			3		
2			4		

SHEET NO. S-125

TOTAL SHEETS 836

5/30/2013 4:56:40 PM R:\station\Finals\Structural\SteelBolted Field Splice Span 6_Sheet 13 of 17.dgn

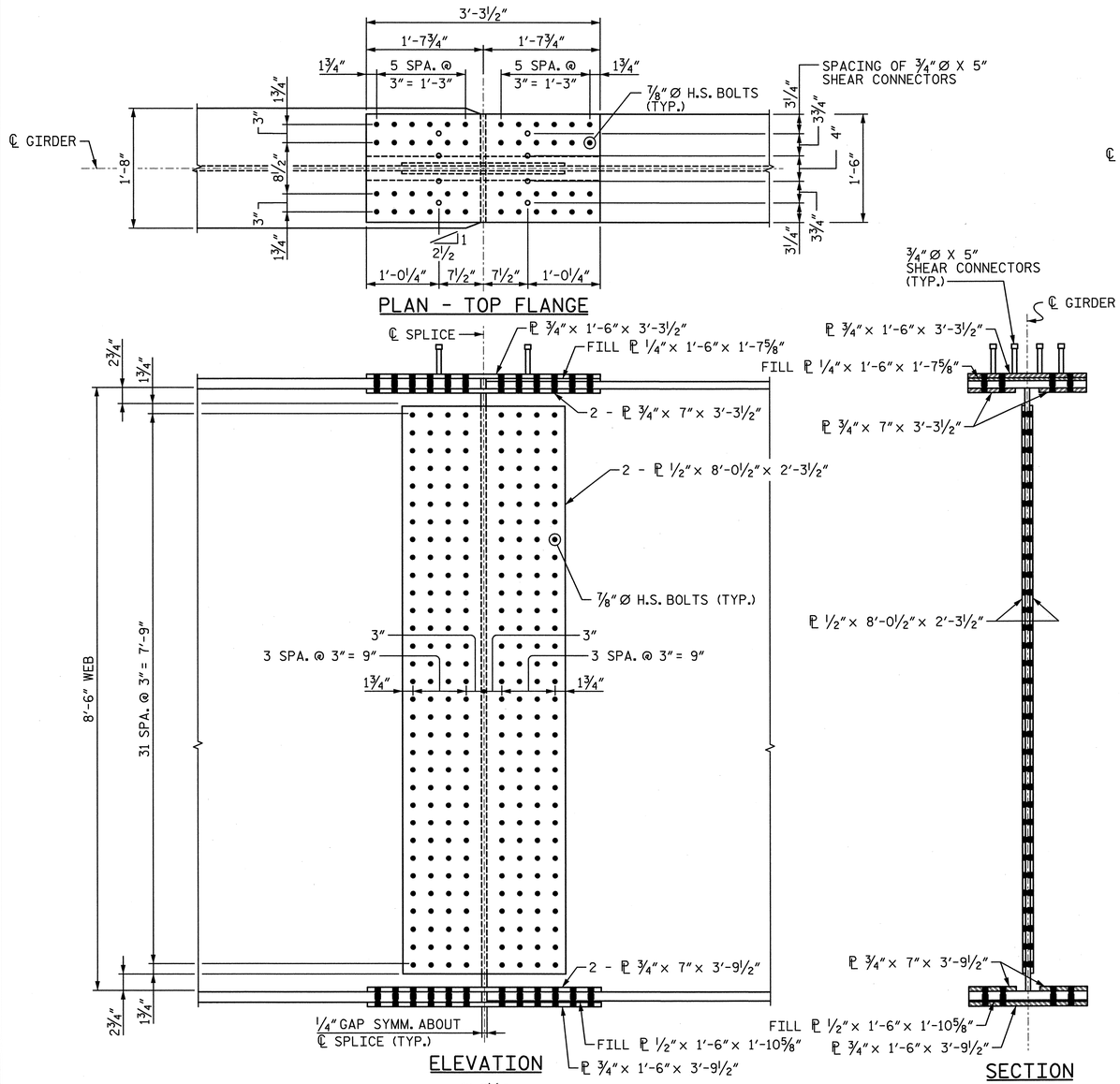

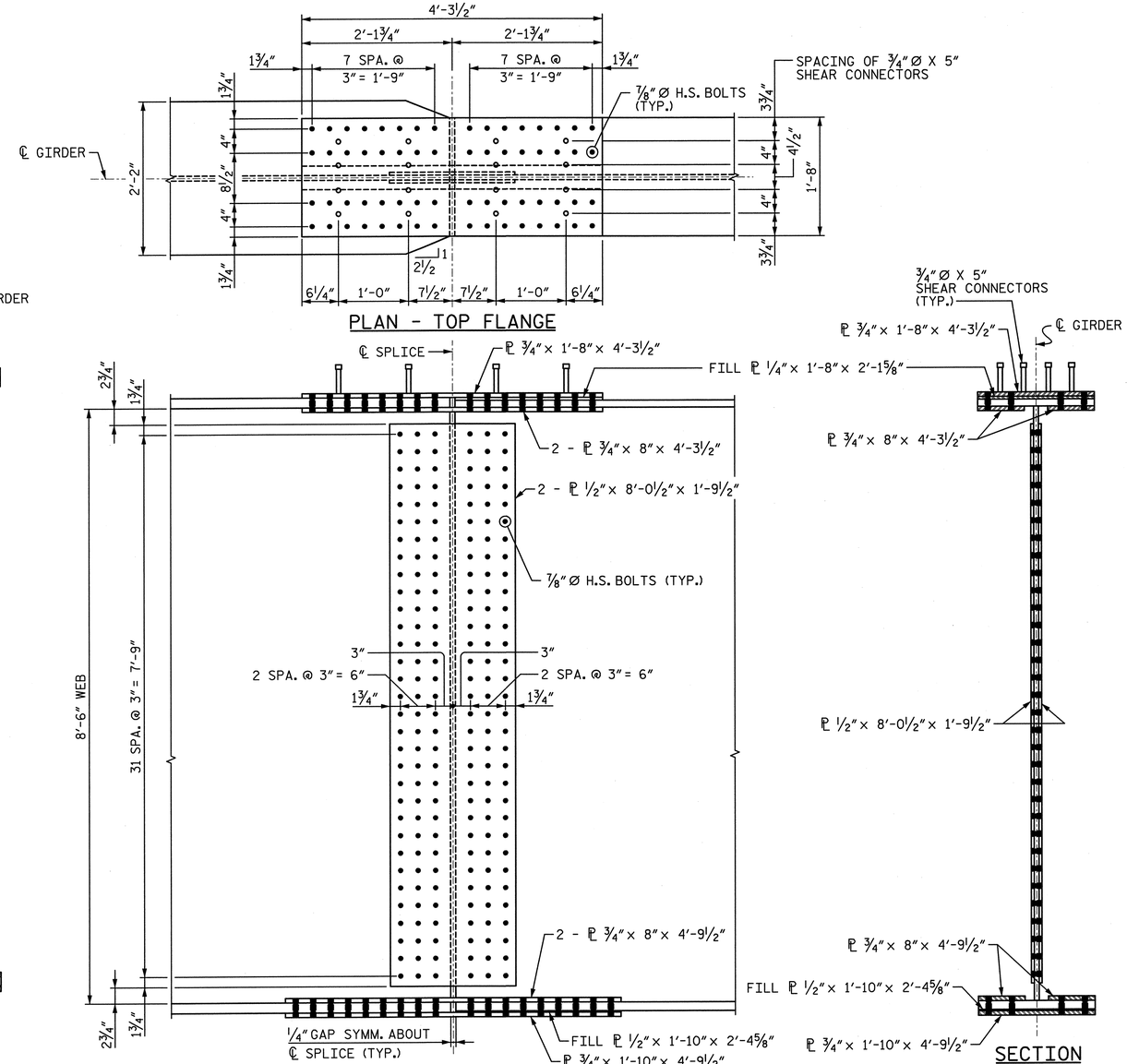

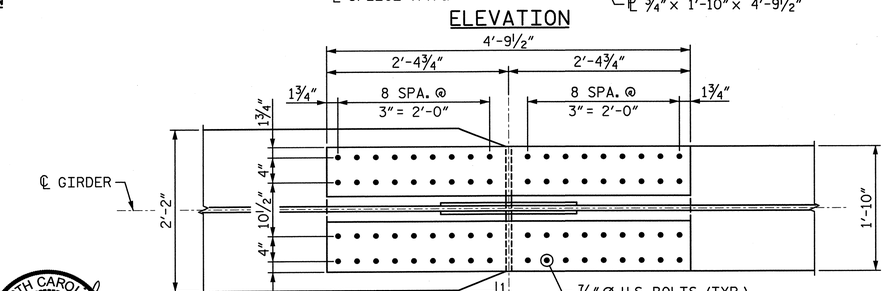

PROJECT NO. U-2524C

GUILFORD COUNTY

STATION: POT 407+73.35 -L-
= POT 29+32.06 -Y4-

SHEET 14 OF 17

STATE OF NORTH CAROLINA
DEPARTMENT OF TRANSPORTATION
RALEIGH

STRUCTURAL STEEL
BOLTED FIELD SPLICE
UNIT G
SPANS 21-23
-LEFT LANE-

NORTH CAROLINA PROFESSIONAL SEAL 28479 ENGINEER KEVIN G. BAILEY 5-30-13

DRAWN BY : KP	DATE : 09/26/2012	DESIGN ENGINEER OF RECORD: K. BAILEY	DATE : 5-13
CHECKED BY : CJ	DATE : 10/01/2012		

STV/ Ralph Whitehead Associates, Inc.
1000 West Morehead St., Ste. 200
Charlotte, NC 28208
NC License No. F-0991

REVISIONS								SHEET NO.
NO.	BY:	DATE:	NO.	BY:	DATE:			S-126
1			3					TOTAL SHEETS
2			4					836

R:\ustation\Finals\Structural\SteelBolted Field Splice Unit G_Sheet 14 of 17.dgn 4:56:45 PM 5/30/2013

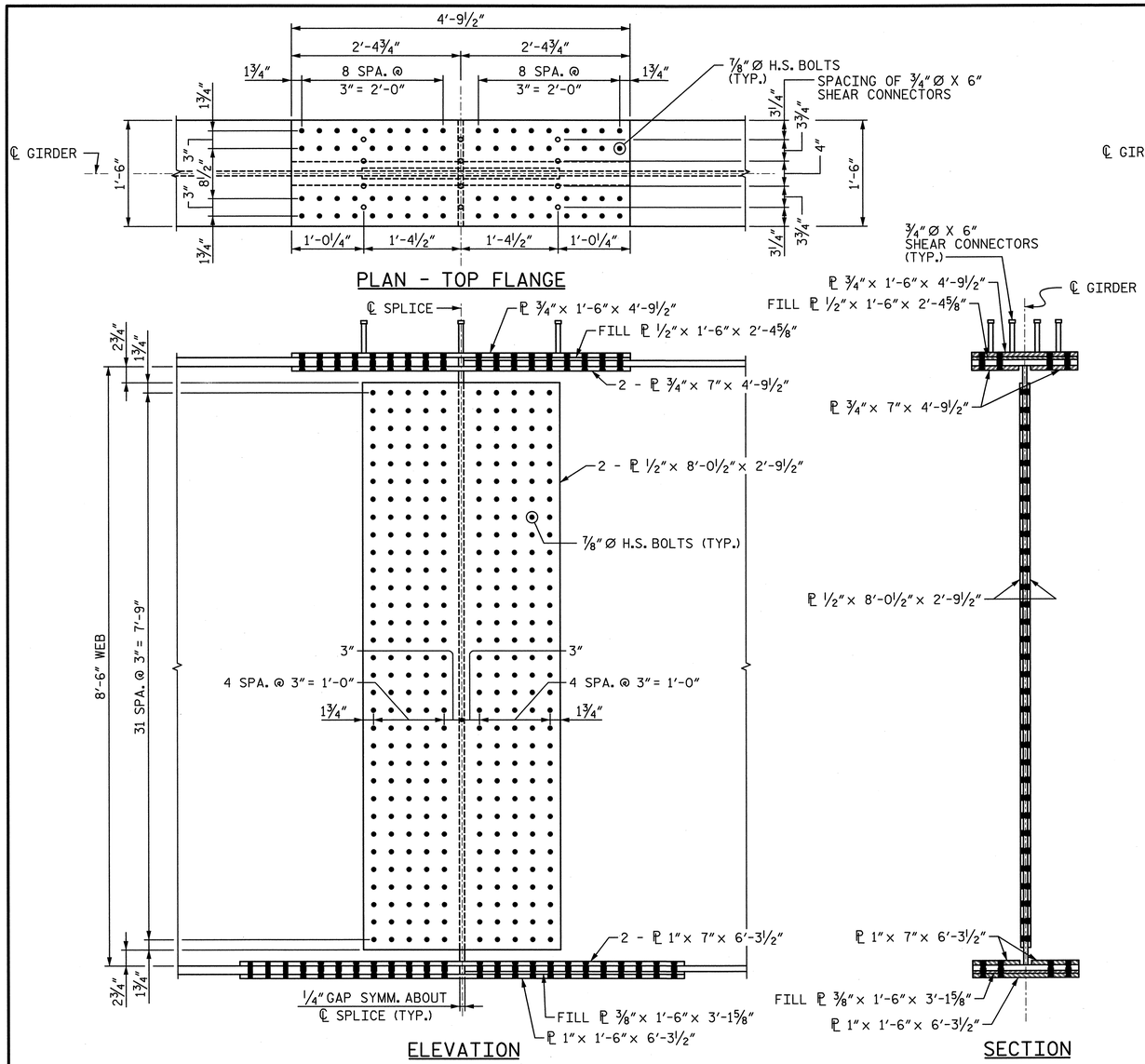

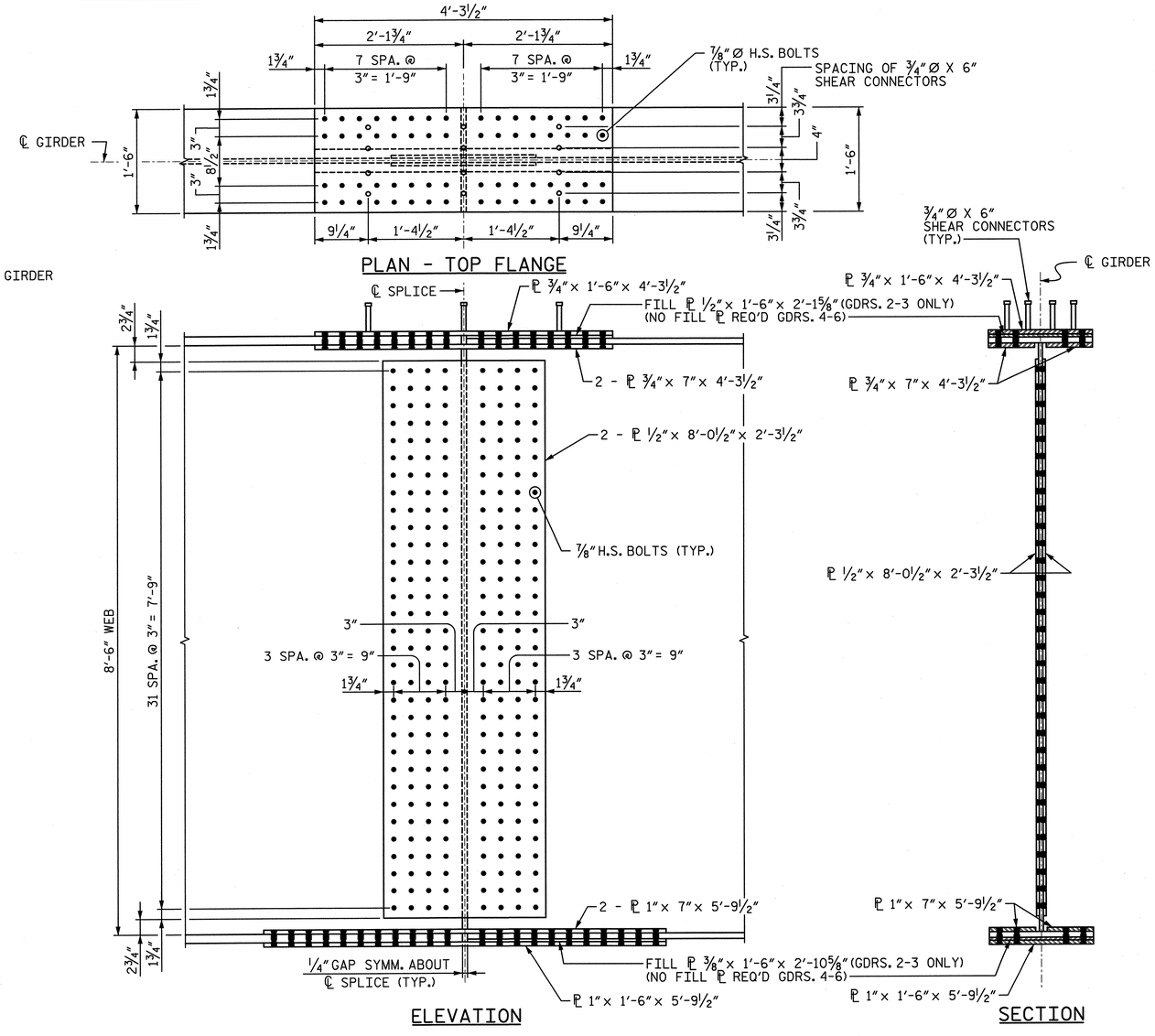

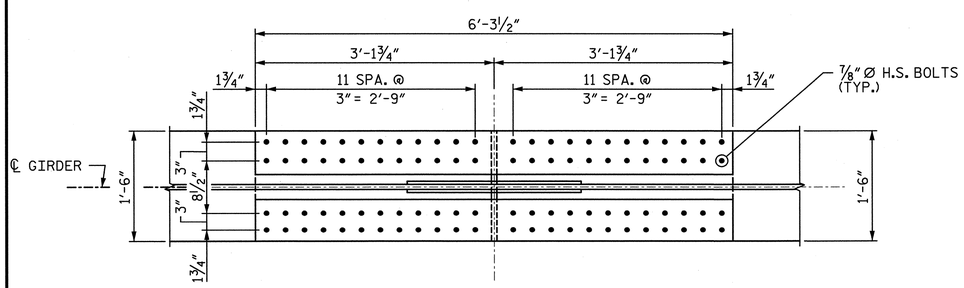

BOLTED FIELD SPLICE - SPAN 24 GIRDER 1

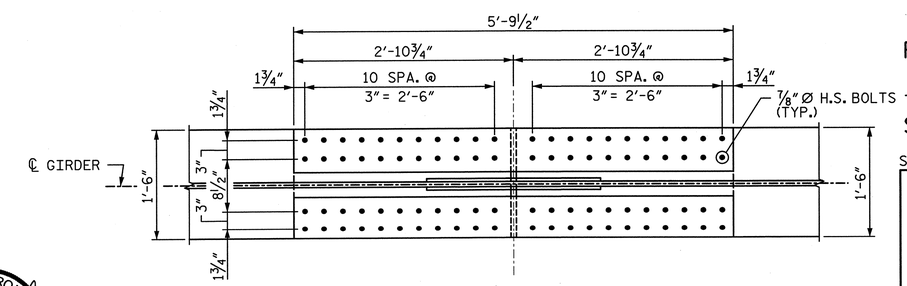

BOLTED FIELD SPLICE - SPAN 24 GIRDERS 2-6

PROJECT NO. U-2524C
GUILFORD COUNTY
STATION: POT 407+73.35 -L-
= POT 29+32.06 -Y4-
SHEET 15 OF 17

STATE OF NORTH CAROLINA
DEPARTMENT OF TRANSPORTATION
RALEIGH

STRUCTURAL STEEL
BOLTED FIELD SPLICE
SPAN 24

-LEFT LANE-

NORTH CAROLINA PROFESSIONAL SEAL 28479 ENGINEER KEVIN G. BAILEY 5-30-13

DRAWN BY : KP	DATE : 9-12	DESIGN ENGINEER OF RECORD: K. BAILEY	DATE : 5-13
CHECKED BY : CJ	DATE : 10-12		

STV / Ralph Whitehead Associates, Inc.
1000 West Morehead St., Ste. 200
Charlotte, NC 28208
NC License No. F-0991

REVISIONS							SHEET NO.
NO.	BY:	DATE:	NO.	BY:	DATE:		S-127
1			3				TOTAL SHEETS
2			4				83

R:\ustation\Finals\Structural Steel\Bolted Field Splice Span 24_Sheet 15 of 17.dgn
5/30/2013 4:56:49 PM

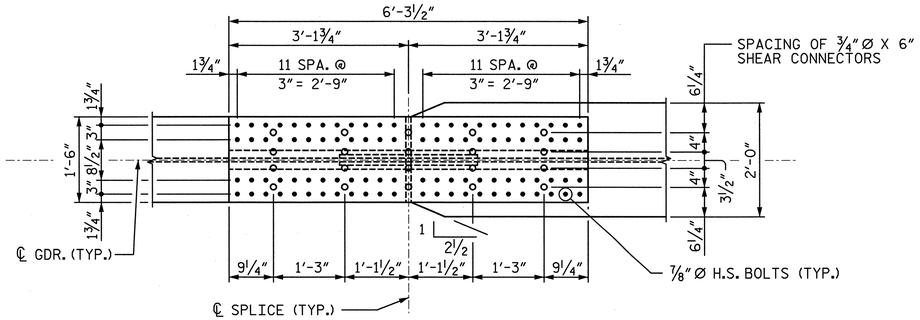

PLAN - TOP FLANGE

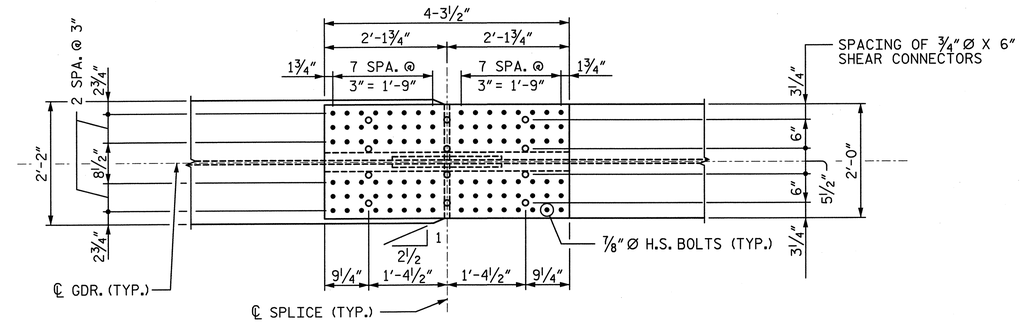

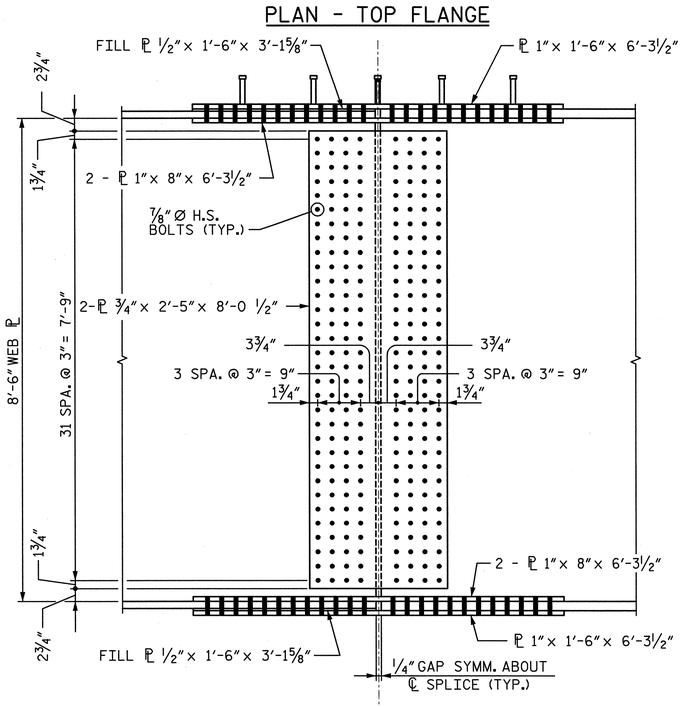

ELEVATION

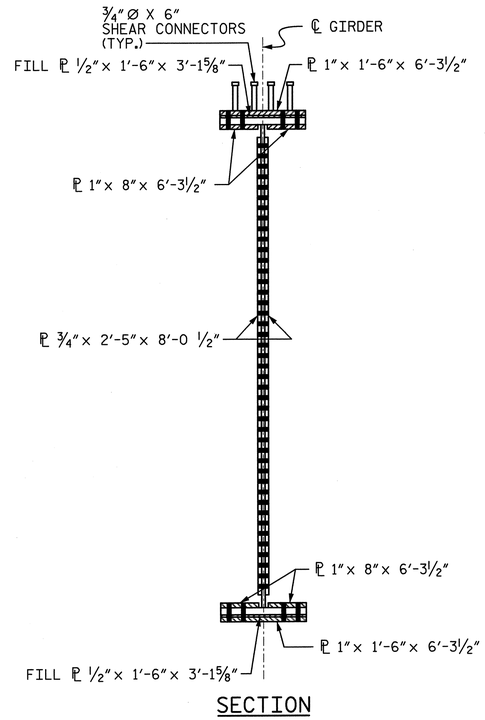

SECTION

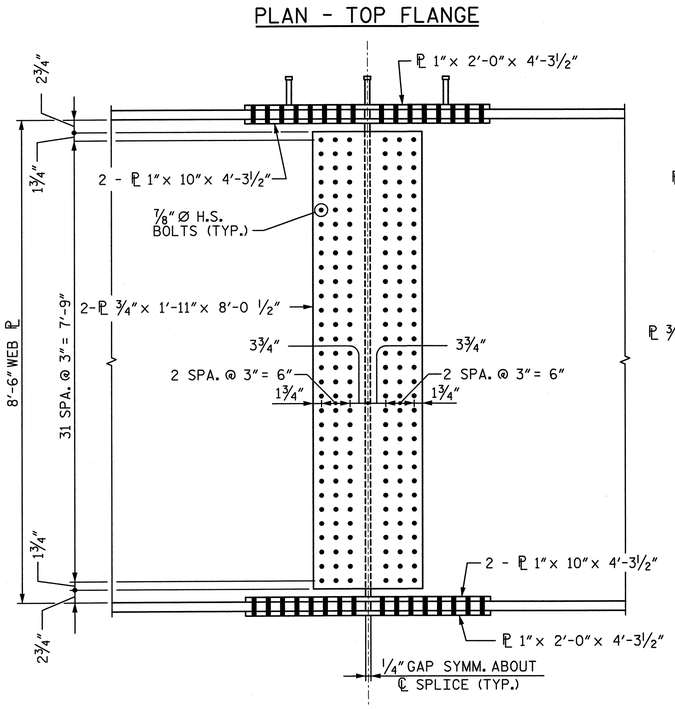

ELEVATION

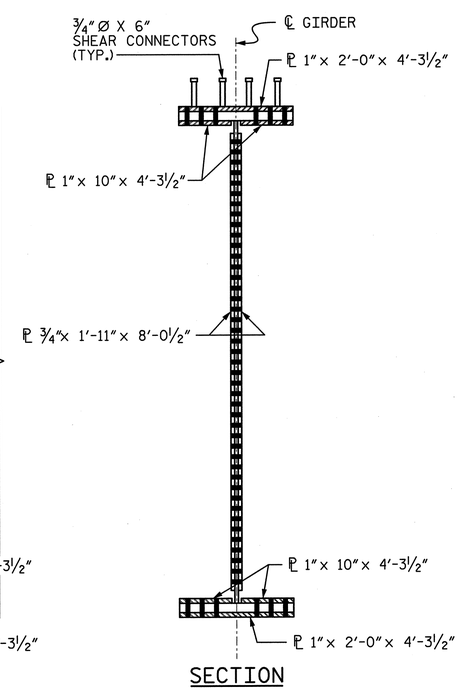

SECTION

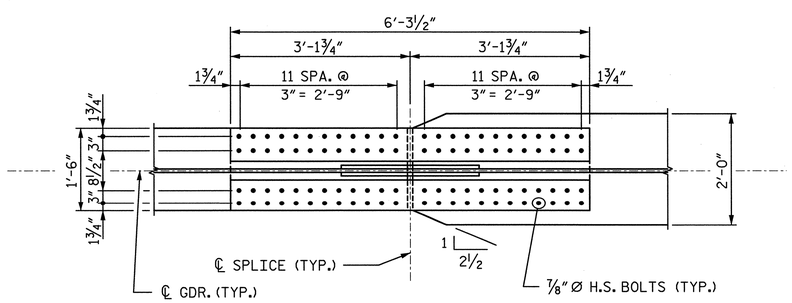

PLAN - BOTTOM FLANGE

BOLTED FIELD SPLICE - TYPE I

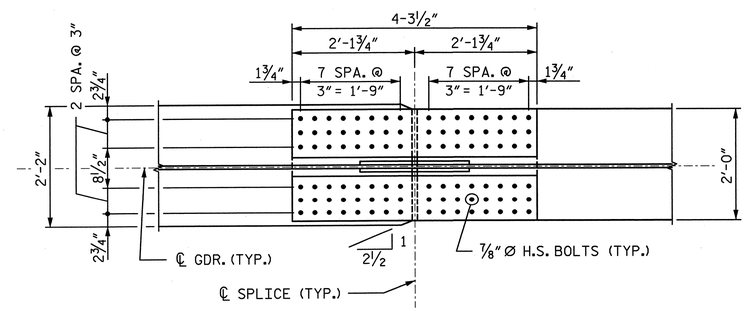

PLAN - BOTTOM FLANGE

BOLTED FIELD SPLICE - TYPE II

PROJECT NO. U-2524C

GUILFORD COUNTY

STATION: POT 407+73.35 -L-
= POT 29+32.06 -Y4-

SHEET 16 OF 17

STATE OF NORTH CAROLINA
DEPARTMENT OF TRANSPORTATION
RALEIGH

STRUCTURAL STEEL
BOLTED FIELD SPLICE
UNIT H
SPANS 25 & 26
-LEFT LANE-

NORTH CAROLINA PROFESSIONAL SEAL 28479 ENGINEER KEVIN G. BAILEY
5-30-13

DRAWN BY : TRL	DATE : 2-13	DESIGN ENGINEER OF RECORD: K. BAILEY	DATE : 5-13
CHECKED BY : MFR	DATE : 2-13		

STV / Ralph Whitehead Associates, Inc.
1000 West Morehead St., Ste. 200
Charlotte, NC 28208
NC License No. F-0991

REVISIONS							
NO.	BY:	DATE:	NO.	BY:	DATE:	SHEET NO.	S-128
1			3			TOTAL SHEETS	83
2			4				

5/30/2013 4:56:53 PM R:\ustation\Finals\Structural\SteelBolted Field Splice Unit H_Sheet 16 of 17.dgn

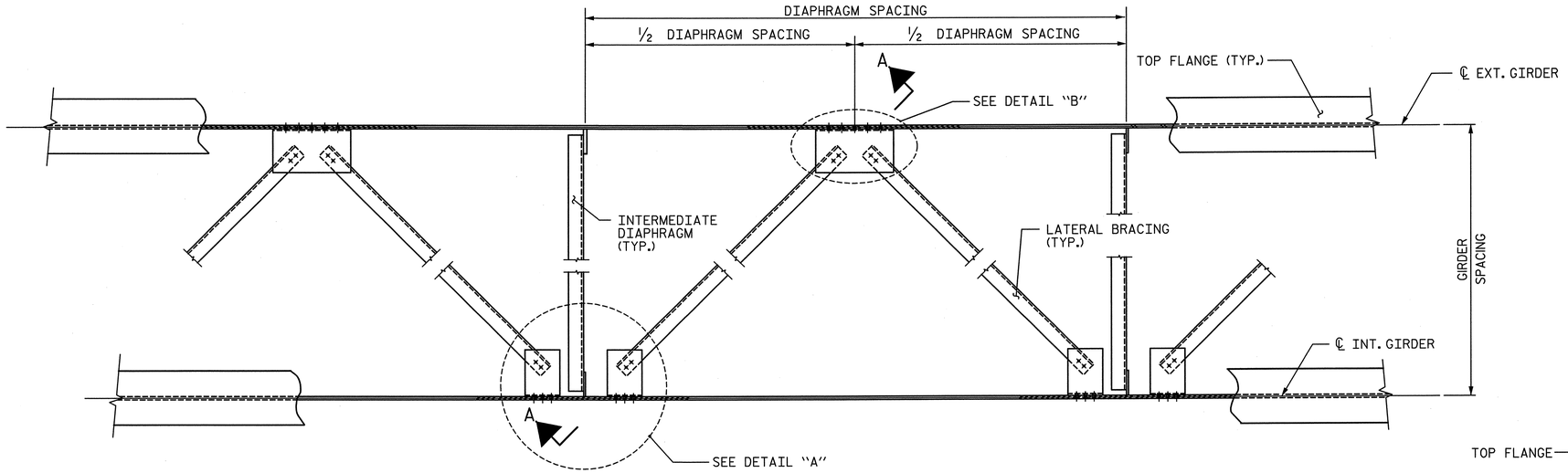

PART PLAN - NEAR TOP FLANGE LATERAL BRACING

(THROUGHOUT EXTERIOR BAYS ONLY)
(SEE FRAMING PLAN FOR LOCATION AND PLACEMENT OF LATERAL BRACING)

NOTES

LATERAL BRACING ASSEMBLY SHALL COMPLY WITH SECTION 1072 OF THE STANDARD SPECIFICATIONS.

ALL STRUCTURAL STEEL SHALL BE AASHTO M270 GRADE 50W OR APPROVED EQUAL.

TENSION ON THE ASTM A325 BOLTS SHALL BE CALIBRATED USING DIRECT TENSION INDICATOR WASHERS IN ACCORDANCE WITH THE STANDARD SPECIFICATIONS.

ALL BOLTED CONNECTIONS SHALL BE ⅞"Ø HIGH STRENGTH BOLTS.

THE CONTRACTOR HAS THE OPTION TO CLIP THE PROTRUDING CORNERS OF THE GUSSET PLATES, AT NO ADDITIONAL COST TO THE DEPARTMENT.

BENT GUSSET PLATES OR ROLLED ANGLE SHAPES MAY BE SUBSTITUTED FOR THE WELDED GUSSET PLATES DETAILED IF APPROVED BY THE ENGINEER, AT NO ADDITIONAL COST TO THE DEPARTMENT.

INSTALL THE LATERAL BRACING AFTER ERECTING THE EXTERIOR GIRDER AND THE ADJACENT INTERIOR GIRDER AND INSTALLING THE INTERMEDIATE DIAPHRAGMS.

TOP FLANGE LATERAL BRACING DETAILED IS PROVIDED TO ASSIST IN LIMITING GIRDER DISPLACEMENT DUE TO WIND FORCES DURING ERECTION. IT SHALL BE INSTALLED IMMEDIATELY AFTER ERECTION OF EACH PAIR OF GIRDER SECTIONS AT END OF SPAN/UNIT BENTS. THE DEPARTMENT ASSUMES NO LIABILITY IN THE ERECTION OR STABILIZATION OF THE GIRDERS.

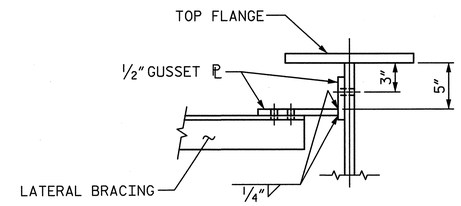

SECTION THRU CONNECTION

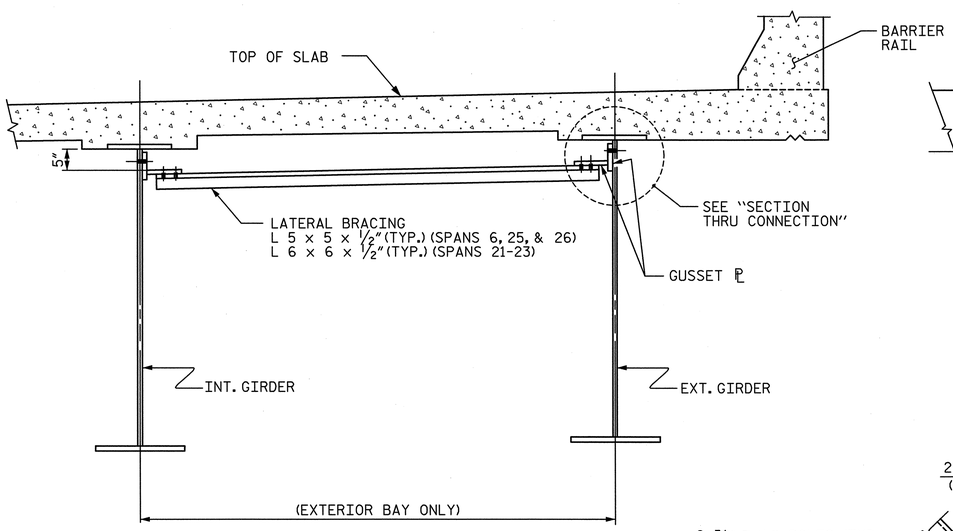

SECTION A-A

(LATERAL BRACING AT TOP FLANGE)

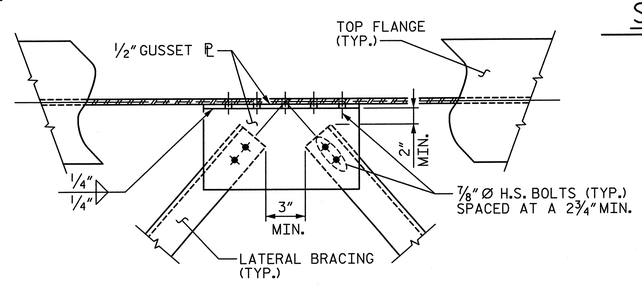

DETAIL "B"

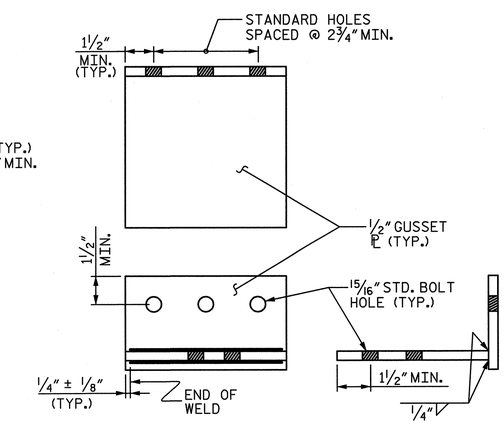

CONNECTION DETAIL

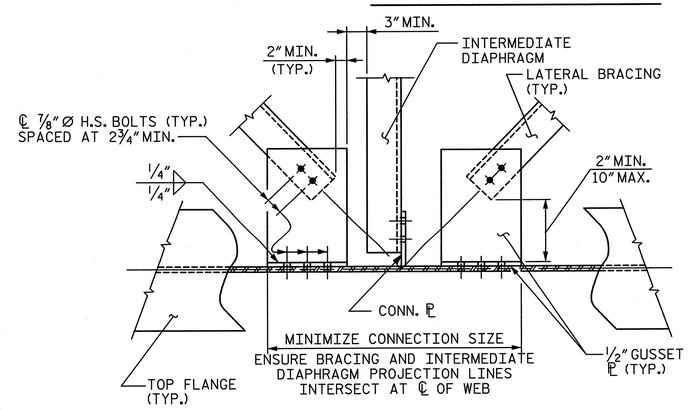

DETAIL "A"

(CONNECTOR PLATE WITH INTERMEDIATE DIAPHRAGM SHOWN, TRANSVERSE STIFFENER LOCATION SIMILAR)

PROJECT NO. U-2524C
GUILFORD COUNTY
STATION: POT 407+73.35 -L-
= POT 29+32.06 -Y4-

SHEET 17 OF 17

STATE OF NORTH CAROLINA
DEPARTMENT OF TRANSPORTATION
RALEIGH

STRUCTURAL STEEL
LATERAL BRACING

-LEFT LANE-

NORTH CAROLINA PROFESSIONAL SEAL 28479 ENGINEER KEVIN G. BAILEY 5-30-13

DRAWN BY : VMW	DATE : 2-13	DESIGN ENGINEER OF RECORD: K. BAILEY	DATE : 5-13
CHECKED BY : MFR	DATE : 2-13		

STV / Ralph Whitehead Associates, Inc.
1000 West Morehead St., Ste. 200
Charlotte, NC 28208
NC License No. F-0991

REVISIONS							
NO.	BY:	DATE:	NO.	BY:	DATE:	SHEET NO.	S-129
1			3			TOTAL SHEETS	836
2			4				

R:\ustation\Finals\Structural Steel Lateral Bracing_Sheet 17 of 17.dgn
5/30/2013 4:56:57 PM

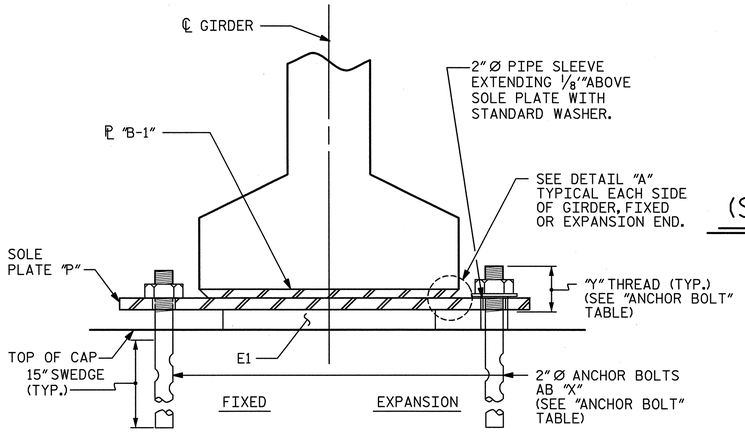

SECTION E-E

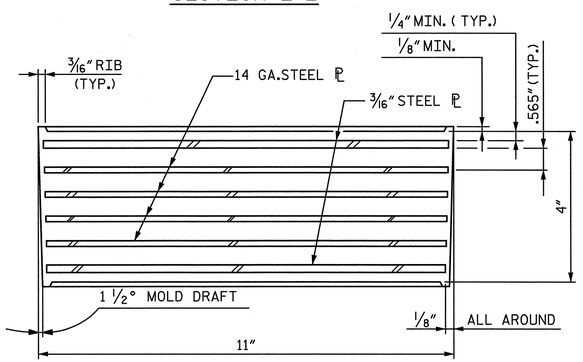

TYPICAL SECTION OF ELASTOMERIC BEARINGS

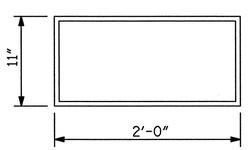

(322 REQ'D)

PLAN VIEW OF ELASTOMERIC BEARING

TYPE E1

MAXIMUM ALLOWABLE SERVICE LOADS	
	MAX.D.L.+ L.L. (NO IMPACT)
TYPE E1	303 K

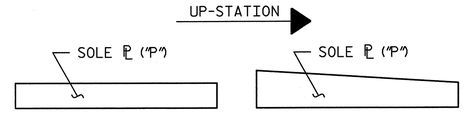

SOLE ℗ PLACEMENT DETAIL (SPAN 1-5, 7-9, 11-15, 17-20, & 27-30)

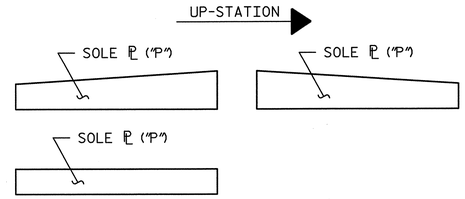

SOLE ℗ PLACEMENT DETAIL (SPAN 10)

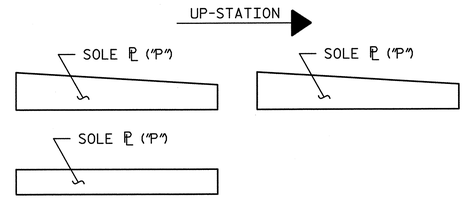

SOLE ℗ PLACEMENT DETAIL (SPAN 16)

● NO MILL FINISH REQUIRED FOR UNIFORM THICKNESS SOLE PLATES.

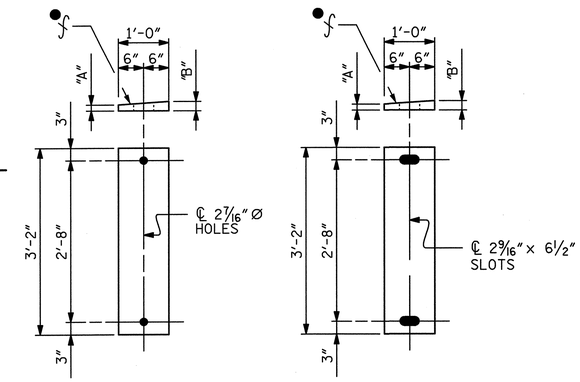

P2,P4,P6,P8, P13,P15,P20 (FIXED)

P1,P3,P5,P7,P9-P12, P14,P16-19,P21-28 (EXPANSION)

SOLE PLATE DETAILS ("P")

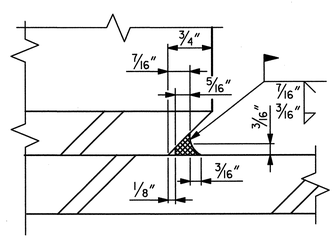

DETAIL "A"

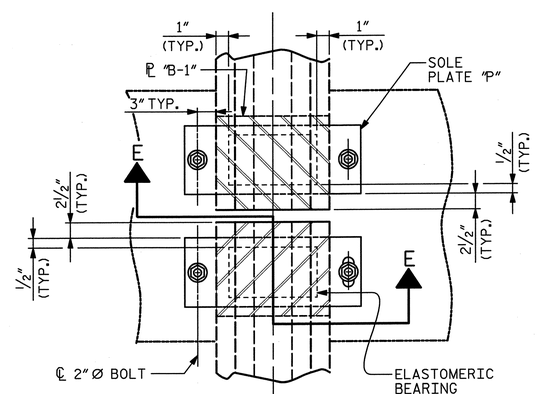

TYPICAL HALF-PLAN (SHOWING CONTINUOUS BENT)

TYPICAL HALF-PLAN (SHOWING SIMPLE SPAN BENT)

ANCHOR BOLT			
ANCHOR BOLT	TOTAL LENGTH	"Y" THREAD	# REQ'D
AB 1	26"	4"	516
AB 2	28"	5 3/4"	20
AB 3	29 1/2"	7 1/4"	14
AB 4	33"	9 3/4"	14
AB 5	29"	6"	12
AB 6	26 1/2"	4 1/4"	16
AB 7	30 1/2"	8 1/4"	16
AB 8	31 1/2"	9 1/4"	20
AB 9	28 1/2"	4"	16

NOTE: SEE SUBSTRUCTURE PLANS FOR ANCHOR BOLT PLACEMENT.

SOLE PLATE				
SOLE ℗	"A"	"B"	# REQ'D	TYPE
P1	1 1/4"	1 1/4"	35	EXP.
P2	1 1/4"	1 1/4"	100	FIX.
P3	1 1/4"	1 3/8"	45	EXP.
P4	1 1/4"	1 3/8"	67	FIX.
P5	1 1/4"	1 1/2"	1	EXP.
P6	1 5/16"	1 7/16"	36	FIX.
P7	1 1/2"	1 5/8"	1	EXP.
P8	1 1/2"	1 5/8"	1	FIX.
P9	1 11/16"	1 13/16"	1	EXP.
P10	2 1/16"	2 1/16"	3	EXP.
P11	3 9/16"	3 11/16"	1	EXP.
P12	3 3/4"	3 3/4"	8	EXP.
P13	2"	2 1/4"	2	FIX.
P14	3"	3 1/8"	1	EXP.
P15	2 1/4"	2 1/2"	1	FIX.
P16	3 3/8"	3 3/8"	1	EXP.
P17	4 1/4"	4 1/4"	1	EXP.
P18	4 11/16"	4 13/16"	1	EXP.
P19	3 7/8"	4 1/8"	1	EXP.
P20	3 1/8"	3 3/8"	1	FIX.
P21	4 11/16"	4 11/16"	1	EXP.
P22	5 13/16"	5 15/16"	1	EXP.
P23	5 7/8"	6"	1	EXP.
P24	7"	7 1/8"	1	EXP.
P25	6 5/8"	6 5/8"	1	EXP.
P26	6 1/8"	6 1/4"	1	EXP.
P27	8 1/8"	8 1/4"	1	EXP.
P28	5 3/4"	5 7/8"	1	EXP.
P29	2"	2"	5	EXP.
P30	2 3/8"	2 1/2"	1	EXP.

NOTES

AT ALL FIXED POINTS OF SUPPORT, NUTS FOR ANCHOR BOLTS ARE TO BE TIGHTENED FINGER TIGHT AND THEN BACKED OFF 1/2 TURN. THE THREAD OF THE NUT AND BOLT SHALL THEN BE BURRED WITH A SHARP POINTED TOOL.

THE 2"Ø PIPE SLEEVE SHALL BE CUT FROM SCHEDULE 40 PVC PLASTIC PIPE. THE PVC PLASTIC PIPE SHALL MEET THE REQUIREMENTS OF ASTM D1785.

STEEL SOLE PLATES, ANCHOR BOLTS, NUTS, AND WASHERS SHALL BE GALVANIZED IN ACCORDANCE WITH THE STANDARD SPECIFICATIONS.

PRIOR TO WELDING, GRIND THE GALVANIZED SURFACE OF THE PORTION OF THE EMBEDDED PLATE AND SOLE PLATE THAT ARE TO BE WELDED. AFTER WELDING, DAMAGED GALVANIZED SURFACES SHALL BE REPAIRED IN ACCORDANCE WITH THE STANDARD SPECIFICATIONS.

WHEN WELDING THE SOLE PLATE TO THE EMBEDDED PLATE IN THE GIRDER, USE TEMPERATURE INDICATING WAX PENS, OR OTHER SUITABLE MEANS, TO ENSURE THAT THE TEMPERATURE OF THE SOLE PLATE DOES NOT EXCEED 300°F. TEMPERATURES ABOVE THIS MAY DAMAGE THE ELASTOMER.

DUE TO THE THICKNESS OF THE SOLE PLATES, THE CONTRACTOR SHALL DETERMINE IF PREHEATING OF SOLE PLATES, PRIOR TO WELDING, IS REQUIRED ACCORDING TO CURRENT AWS STANDARDS. IF PREHEATING IS NECESSARY, CONTRACTOR SHALL BE PREPARED TO JACK GIRDERS TO CREATE AN AIR GAP BETWEEN THE SOLE PLATE AND THE ELASTOMERIC BEARING TO LIMIT THE BEARING TEMPERATURE TO A MAXIMUN OF 300°F. NO ADDITIONAL MEASUREMENT OR PAYMENT WILL BE MADE FOR PREHEATING SOLE PLATES OR GIRDER JACKING TO LIMIT ELASTOMERIC BEARING TEMPERATURE.

SOLE PLATE "P", BOLTS, NUTS, WASHERS, AND PIPE SLEEVE SHALL BE INCLUDED IN THE PAY ITEM FOR PRESTRESSED CONCRETE GIRDERS.

ANCHOR BOLTS SHALL MEET THE REQUIREMENTS OF ASTM A449. NUTS SHALL MEET THE REQUIREMENTS OF AASHTO M291-DH OR AASHTO M292-2H. WASHERS SHALL MEET THE REQUIREMENTS OF AASHTO M293. NO SHOP DRAWINGS ARE REQUIRED FOR ANCHOR BOLTS, NUTS AND WASHERS. SHOP INSPECTION IS REQUIRED.

ALL SURFACES OF BEARING PLATES SHALL BE SMOOTH AND STRAIGHT.

THE ELASTOMER IN THE STEEL REINFORCED BEARINGS SHALL HAVE A SHEAR MODULUS OF 0.160 ksi, IN ACCORDANCE WITH AASHTO M251.

ALL BEARING PLATES SHALL BE M270 GRADE 50.

FOR STEEL REINFORCED ELASTOMERIC BEARINGS, SEE SPECIAL PREVISIONS.

PROJECT NO. U-2524C

GUILFORD COUNTY

STATION: POT 407+73.35 -L-
= POT 29+32.06 -Y4-

STATE OF NORTH CAROLINA
DEPARTMENT OF TRANSPORTATION
RALEIGH

ELASTOMERIC BEARING DETAILS

-LEFT LANE-

REVISIONS						SHEET NO.
NO.	BY:	DATE:	NO.	BY:	DATE:	S-130
1			3			TOTAL SHEETS
2			4			836

STV / Ralph Whitehead Associates, Inc.
1000 West Morehead St., Ste. 200
Charlotte, NC 28208
NC License No. F-0991

DRAWN BY : VMW DATE : 10-12
CHECKED BY : TRL DATE : 2-13
DESIGN ENGINEER OF RECORD: T. TOWNSEND DATE : 5-13

5/30/2013 4:57:01 PM R:\ustation\Finals\Elastomeric Bearing Details.dgn

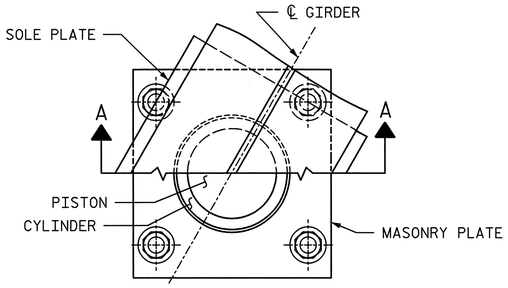

CUT-AWAY PLAN

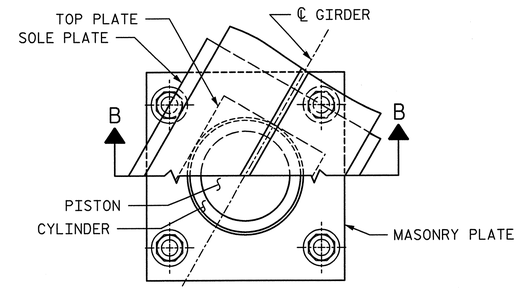

CUT-AWAY PLAN

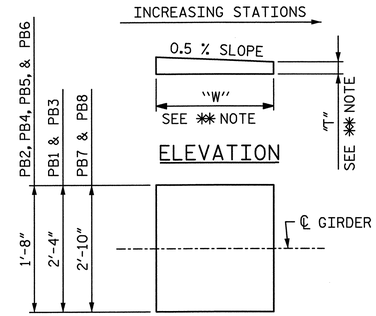

PLAN

✱✱ NOTE:
DIMENSIONS "W" AND "T" ARE TO BE DETERMINED BY THE MANUFACTURER.

SOLE PLATE DETAILS

NOTES

FOR POT BEARINGS, SEE SPECIAL PROVISIONS.

AT ALL POINTS OF SUPPORT IN SPANS 6 & 21-25, NUTS FOR ANCHOR BOLTS SHALL BE TIGHTENED FINGER TIGHT AND GIVEN AN ADDITIONAL 1/4 TURN. THE THREAD OF THE NUT AND BOLT SHALL THEN BE BURRED WITH A SHARP POINTED TOOL.

WHEN WELDING THE SOLE PLATE TO THE GIRDER, USE TEMPERATURE INDICATING WAX PENS, OR OTHER SUITABLE MEANS, TO ENSURE THAT THE TEMPERATURE OF THE BEARING DOES NOT EXCEED 250°F TEMPERATURES ABOVE THIS MAY DAMAGE THE TFE OR ELASTOMER.

AFTER BEARING ASSEMBLY IS IN PLACE AND ANCHOR BOLTS HAVE BEEN FINALLY POSITIONED. THEY SHALL BE GROUTED IN PLACE AS SHOWN.

THE CLOSURE PLATE, GROUT PIPE AND STANDARD PIPE FOR THIS ASSEMBLY NEED NOT BE GALVANIZED.

SOLE PLATES SHOULD BE WELDED TO BEAM FLANGES AND ANCHOR BOLTS SHOULD BE GROUTED BEFORE FALSEWORK IS PLACED.

ALL SURFACES OF BEARING PLATES SHALL BE SMOOTH AND STRAIGHT.

FOR THERMAL SPRAYED COATINGS (METALLIZATION), SEE SPECIAL PROVISIONS.

THE CONTRACTOR MAY SUBSTITUTE DISC BEARINGS FOR THE POT BEARINGS SHOWN. FOR OPTIONAL DISC BEARINGS, SEE SPECIAL PROVISIONS.

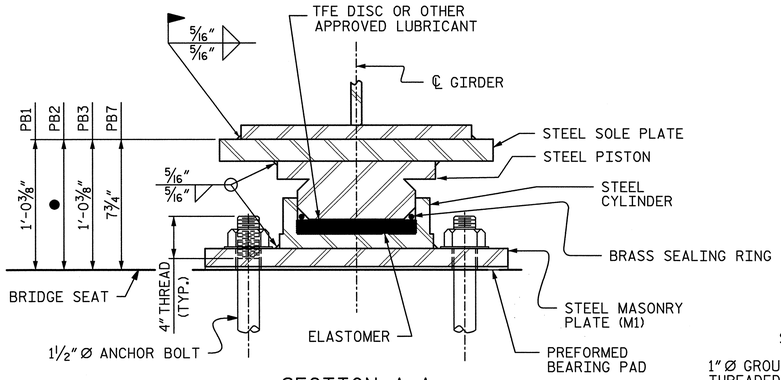

SECTION A-A
(GROUT CANS NOT SHOWN FOR CLARITY. FOR GROUT CANS, SEE SECTION B-B)

FIXED
(PB1 12 REQ'D.)
(PB2 6 REQ'D.)
(PB3 6 REQ'D.)
(PB7 7 REQ'D.)

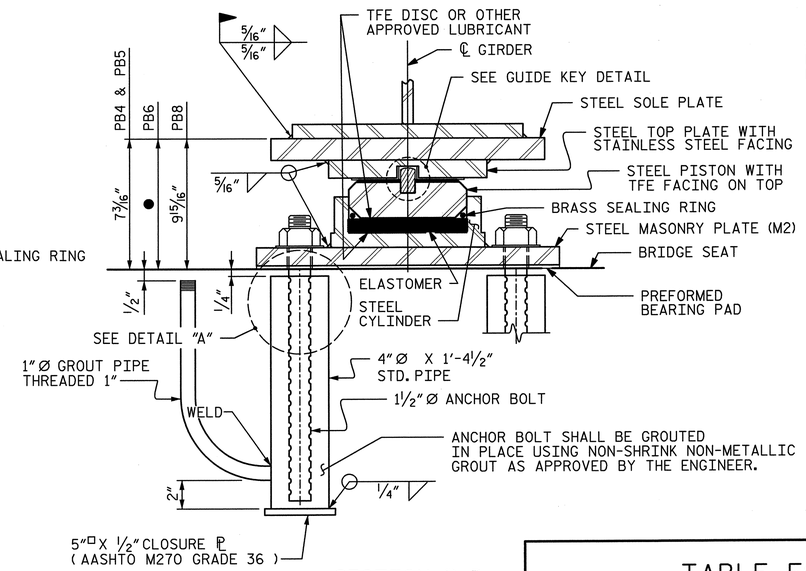

SECTION B-B

EXPANSION
(PB4 12 REQ'D.)
(PB5 6 REQ'D.)
(PB6 12 REQ'D.)
(PB8 7 REQ'D.)

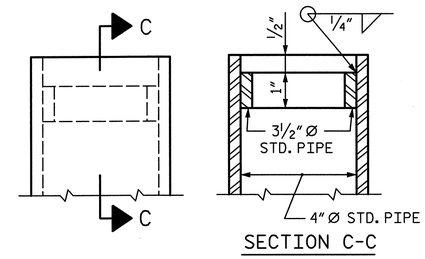

SECTION C-C

DETAIL "A"

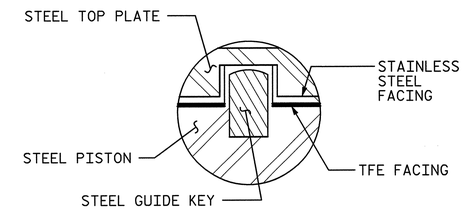

GUIDE KEY DETAIL

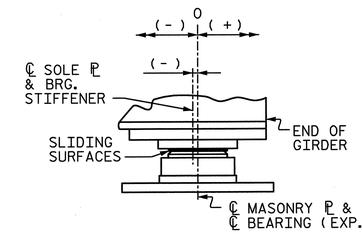

TABLE FOR BEARING

BEARING	LOCATION		●
PB2	BENT 24, SPAN 24	GDR. 1	8 9/16"
		GDR. 2	8 11/16"
		GDR. 3	8 3/4"
		GDR. 4	8 13/16"
		GDR. 5	9 11/16"
		GDR. 6	9"
PB6	BENT 24, UNIT H	GDR. 1-4 & 6	7 3/16"
		GDR. 5	8"
PB6	BENT 26, UNIT H	GDR. 1-6	7 3/16"

POT BEARING DETAILS

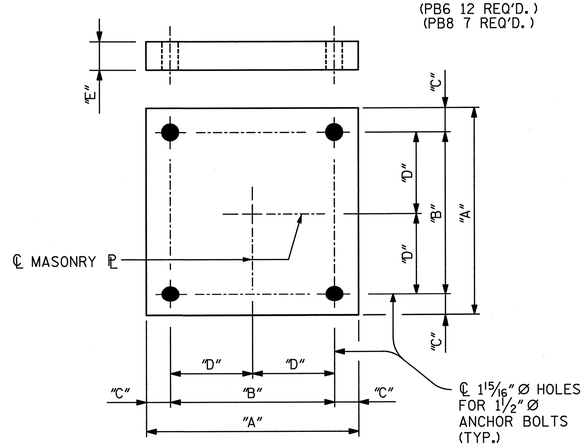

PLAN

M1 (31 REQ'D.)
(BENTS 5, 21, 22, 24, & 25)

M2 (37 REQ'D.)
(BENTS 6, 20, 23, 24, & 26)

MASONRY PLATE DETAILS

TABLE FOR MASONRY PLATE DIMENSIONS

BEARING	MASONRY PLATE	"A"	"B"	"C"	"D"	"E"
PB1	M1	3'-0"	2'-5"	3 1/2"	1-2 1/2"	2 1/4"
PB2	M1	1'-8 5/8"	1'-2 5/8"	3"	7 5/16"	1 1/8"
PB3	M1	3'-0"	2'-5"	3 1/2"	1'-2 1/2"	2 1/4"
PB4	M2	1'-8 5/8"	1'-2 5/8"	3"	7 5/16"	1 1/8"
PB5	M2	1'-8 5/8"	1'-2 5/8"	3"	7 5/16"	1 1/8"
PB6	M2	1'-8 5/8"	1'-2 5/8"	3"	7 5/16"	1 1/8"
PB7	M1	2'-2 1/2"	1'-8 1/2"	3"	10 1/4"	1 1/2"
PB8	M2	2'-6"	2'-0"	3"	1'-0"	1 5/8"

TABLE FOR LOADS AND MOVEMENT

BEARING	LOCATION	UNFACTORED VERTICAL LOAD (KIPS) DEAD DC	DW	LIVE LL+IM	TOTAL	FACTORED LATERAL LOAD (KIPS)	TOTAL MOVEMENT (INCHES)
PB1 (FIXED)	BENTS 21 & 22, UNIT G	689.0	82.9	331.0	1102.9	250	0.00
PB2 (FIXED)	BENT 24, SPAN 24	193.6	29.4	149.8	372.8	71.4	0.00
PB3 (FIXED)	BENT 25, UNIT H	678.2	142.1	287.1	1107.4	241.0	0.00
PB4 (EXP.)	BENTS 20 & 23, UNIT G	190.6	23.9	158.7	373.2	74.0	3.33"
PB5 (EXP.)	BENT 23, SPAN 24	193.6	29.4	149.8	372.8	71.4	1.72"
PB6 (EXP.)	BENTS 24 & 26, UNIT H	187.8	45.1	183.8	416.7	81.2	1.79"
PB7 (FIXED)	BENT 5, SPAN 6	354.2	86.0	176.7	616.9	135	0.00
PB8 (EXP.)	BENT 6, SPAN 6	494.4	89.0	223.3	806.7	175	2.41

TABLE FOR PLATE SETTING DATA
(EXPANSION POT BEARINGS)

TEMPERATURE AT TIME OF SETTING	45° F	60° F	90° F	✱
PB4 BENTS 20 & 23, UNIT G	-7/16"	0	13/16"	-1 1/8"
PB5 BENT 23, SPAN 24	-3/16"	0	7/16"	-1 1/8"
PB6 BENTS 24 & 26, UNIT H	-5/16"	0	9/16"	-1 5/16"
PB8 BENT 6, SPAN 6	-5/16"	0	5/8"	-2 11/16"

✱ CORRECTION FOR END ROTATION DUE TO WEIGHT OF SLAB AND COMPOSITE DEAD LOAD.

TEMPERATURE SETTING DETAIL

NORTH CAROLINA PROFESSIONAL SEAL 28479 ENGINEER KEVIN G. BAILEY 6-7-13

PROJECT NO. U-2524C
GUILFORD COUNTY
STATION: POT 407+73.35 -L-
= POT 29+32.06 -Y4-
SHEET 1 OF 2

STATE OF NORTH CAROLINA
DEPARTMENT OF TRANSPORTATION
RALEIGH

POT BEARINGS

-LEFT LANE-

DRAWN BY : TRL DATE : 1-13
CHECKED BY : TJT DATE : 2-13
DESIGN ENGINEER OF RECORD: T. TOWNSEND DATE : 5-13

STV / Ralph Whitehead Associates, Inc.
1000 West Morehead St. Ste. 200
Charlotte, NC 28208
NC License No. F-0991

REVISIONS								SHEET NO.
NO.	BY:	DATE:	NO.	BY:	DATE:			S-131
1			3					TOTAL SHEETS
2			4					836

6/7/2013 3:26:09 PM R:\ustation\Finals\Pot Bearings Sheet 1of 2.dgn

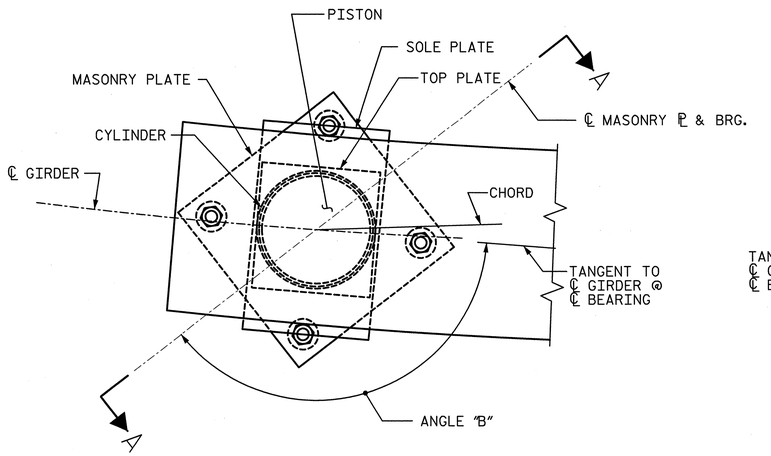

PLAN - BENTS 5

PB8

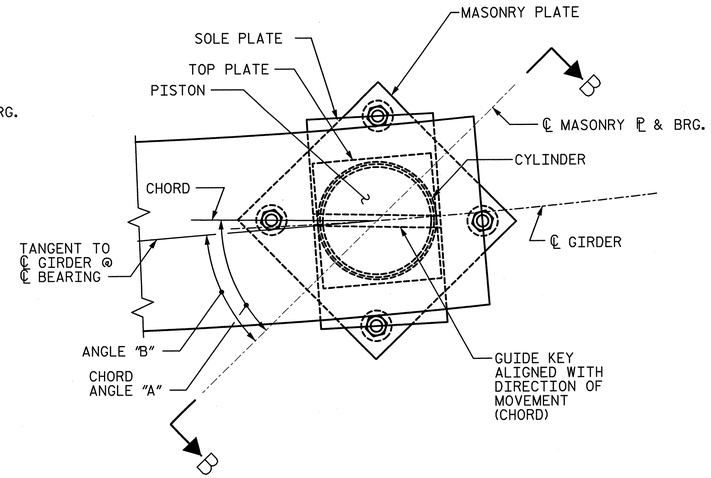

PLAN - BENT 6

PB7

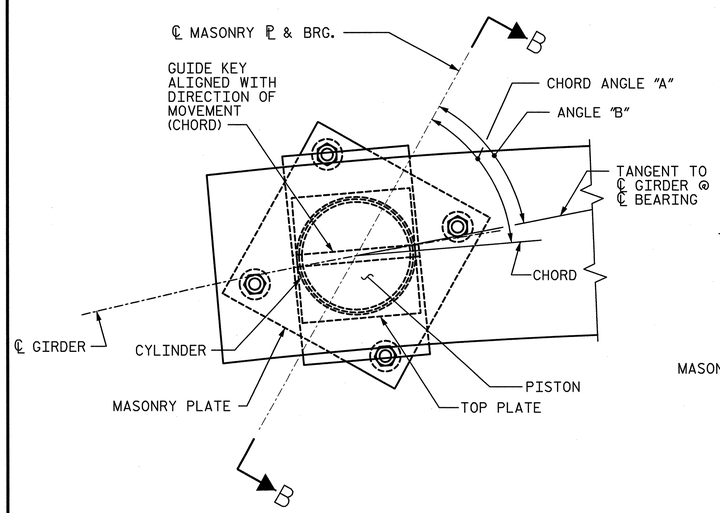

PLAN - BENT 24 SPAN 25

PB6

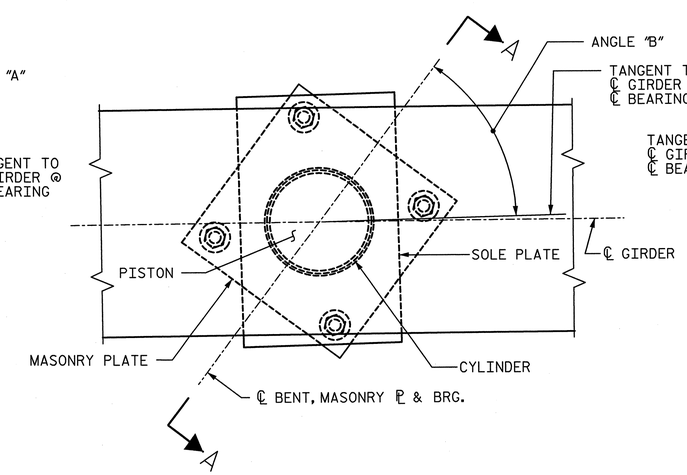

PLAN - BENT 25

PB3

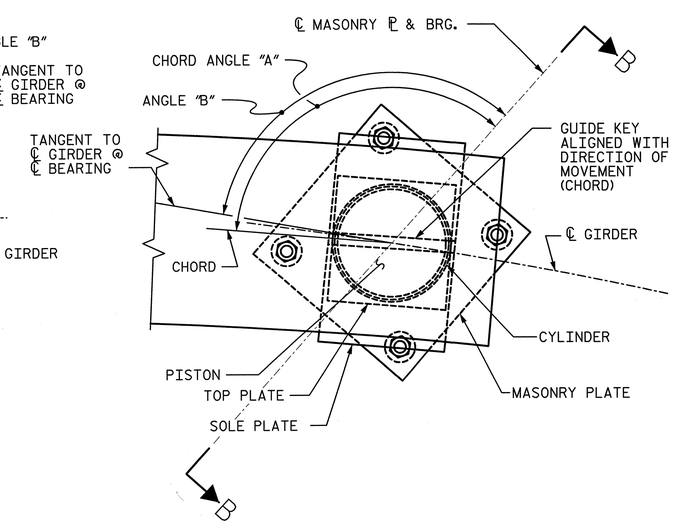

PLAN - BENT 26 SPAN 26

PB6

NOTES:

FOR SECTIONS A-A, B-B, ADDITIONAL NOTES AND ADDITIONAL DETAILS, SEE SHEET 1 OF 2.

CHORD IS FROM EXPANSION BEARING TO ADJACENT FIXED BEARING.

POT BEARING ANGLES (SPANS 6, 25, & 26)			
BEARING LOCATION		CHORD ANGLE "A"	ANGLE "B"
BENT	GIRDER		
BENT 5	1	-	138°-55′-29″
	2	-	138°-37′-09″
	3	-	138°-19′-06″
	4	-	138°-01′-18″
	5	-	137°-43′-47″
	6	-	137°-26′-31″
	7	-	137°-09′-30″
BENT 6	1	41°-28′-51″	38°-27′-50″
	2	41°-48′-05″	38°-47′-57″
	3	42°-06′-60″	39°-07′-43″
	4	42°-25′-37″	39°-27′-11″
	5	42°-43′-57″	39°-46′-19″
	6	43°-02′-00″	40°-05′-10″
	7	43°-19′-48″	40°-23′-43″
BENT 24 SPAN 25	1	51°-48′-07″	50°-45′-22″
	2	51°-43′-08″	50°-40′-14″
	3	51°-38′-09″	50°-35′-04″
	4	51°-33′-14″	50°-34′-22″
	5	51°-28′-31″	50°-34′-22″
	6	51°-23′-59″	50°-34′-22″
BENT 25	1	-	52°-53′-58″
	2	-	52°-46′-02″
	3	-	52°-41′-15″
	4	-	52°-36′-26″
	5	-	52°-31′-36″
	6	-	52°-26′-45″
BENT 26 SPAN 26	1	124°-50′-53″	122°-29′-19″
	2	125°-00′-31″	122°-38′-53″
	3	125°-10′-03″	122°-48′-33″
	4	125°-19′-25″	122°-58′-19″
	5	125°-28′-38″	123°-08′-11″
	6	125°-37′-42″	123°-18′-10″

PROJECT NO. U-2524C

GUILFORD COUNTY

STATION: POT 407+73.35 -L-
= POT 29+32.06 -Y4-

SHEET 2 OF 2

NORTH CAROLINA PROFESSIONAL SEAL 28479 ENGINEER KEVIN G. BAILEY 5-30-13

STATE OF NORTH CAROLINA
DEPARTMENT OF TRANSPORTATION
RALEIGH

POT BEARING DETAILS

-LEFT LANE-

REVISIONS							SHEET NO.
NO.	BY:	DATE:	NO.	BY:	DATE:		S-132
1			3				TOTAL SHEETS
2			4				83

STV / Ralph Whitehead Associates, Inc.
1000 West Morehead St., Ste. 200
Charlotte, NC 28208
NC License No. F-0991

DRAWN BY : TRL	DATE : 3-13	DESIGN ENGINEER OF RECORD: T. TOWNSEND	DATE : 5-13
CHECKED BY : TJT	DATE : 3-13		

5/30/2013 4:57:10 PM R:\ustation\Finals\Pot Bearings Sheet 2 of 2.dgn

UNIT A CAMBER AND DEFLECTIONS TABLE

SPAN 1 GIRDER POSITION 1-6

TENTH POINTS	0.00	0.10	0.20	0.30	0.40	0.50	0.60	0.70	0.80	0.90	1.00
CAMBER (GIRDER ALONE IN PLACE) (FT.)	0.000	0.053	0.092	0.120	0.137	0.142	0.137	0.120	0.092	0.053	0.000
DEFLECTION DUE TO SUPERIMPOSED D.L. (FT.)**	0.000	-0.020	-0.040	-0.056	-0.066	-0.069	-0.066	-0.056	-0.040	-0.020	0.000
FINAL CAMBER (IN.)	0"	3/8"	5/8"	3/4"	7/8"	7/8"	7/8"	3/4"	5/8"	3/8"	0"

SPAN 2 GIRDER POSITION 1-6

TWENTIETH POINTS	0.00	0.05	0.10	0.15	0.20	0.25	0.30	0.35	0.40	0.45	0.50	0.55	0.60	0.65	0.70	0.75	0.80	0.85	0.90	0.95	1.00
CAMBER (GIRDER ALONE IN PLACE) (FT.)	0.000	0.065	0.123	0.175	0.220	0.257	0.288	0.312	0.329	0.340	0.343	0.340	0.329	0.312	0.288	0.257	0.220	0.175	0.123	0.065	0.000
DEFLECTION DUE TO SUPERIMPOSED D.L. (FT.)**	0.000	-0.029	-0.057	-0.085	-0.111	-0.134	-0.153	-0.169	-0.181	-0.188	-0.190	-0.188	-0.181	-0.169	-0.153	-0.134	-0.111	-0.085	-0.057	-0.029	0.000
FINAL CAMBER (IN.)	0"	7/16"	13/16"	1 1/16"	1 5/16"	1 1/2"	1 5/8"	1 11/16"	1 13/16"	1 13/16"	1 13/16"	1 13/16"	1 13/16"	1 11/16"	1 5/8"	1 1/2"	1 5/16"	1 1/16"	13/16"	7/16"	0"

UNIT B CAMBER AND DEFLECTIONS TABLE

SPAN 3 GIRDER POSITION 1 & 7

TWENTIETH POINTS	0.00	0.05	0.10	0.15	0.20	0.25	0.30	0.35	0.40	0.45	0.50	0.55	0.60	0.65	0.70	0.75	0.80	0.85	0.90	0.95	1.00
CAMBER (GIRDER ALONE IN PLACE) (FT.)	0.000	0.061	0.116	0.167	0.211	0.249	0.281	0.306	0.324	0.334	0.338	0.334	0.324	0.306	0.281	0.249	0.211	0.167	0.116	0.061	0.000
DEFLECTION DUE TO SUPERIMPOSED D.L. (FT.)**	0.000	-0.029	-0.058	-0.086	-0.112	-0.135	-0.155	-0.171	-0.183	-0.190	-0.192	-0.190	-0.183	-0.171	-0.155	-0.135	-0.112	-0.086	-0.058	-0.029	0.000
FINAL CAMBER (IN.)	0"	3/8"	11/16"	1"	1 3/16"	1 3/8"	1 1/2"	1 5/8"	1 11/16"	1 3/4"	1 3/4"	1 3/4"	1 11/16"	1 5/8"	1 1/2"	1 3/8"	1 3/16"	1"	11/16"	3/8"	0"

SPAN 3 GIRDER POSITION 2-6

CAMBER (GIRDER ALONE IN PLACE) (FT.)	0.000	0.061	0.116	0.167	0.211	0.249	0.281	0.306	0.324	0.334	0.338	0.334	0.324	0.306	0.281	0.249	0.211	0.167	0.116	0.061	0.000
DEFLECTION DUE TO SUPERIMPOSED D.L. (FT.)**	0.000	-0.027	-0.053	-0.079	-0.103	-0.124	-0.143	-0.157	-0.168	-0.175	-0.177	-0.175	-0.168	-0.157	-0.143	-0.124	-0.103	-0.079	-0.053	-0.027	0.000
FINAL CAMBER (IN.)	0"	7/16"	3/4"	1 1/16"	1 5/16"	1 1/2"	1 11/16"	1 3/4"	1 7/8"	1 15/16"	1 15/16"	1 15/16"	1 7/8"	1 3/4"	1 11/16"	1 1/2"	1 5/16"	1 1/16"	3/4"	7/16"	0"

SPAN 4 GIRDER POSITION 1

CAMBER (GIRDER ALONE IN PLACE) (FT.)	0.000	0.059	0.114	0.164	0.208	0.247	0.279	0.304	0.323	0.334	0.337	0.334	0.323	0.304	0.279	0.247	0.208	0.164	0.114	0.059	0.000
DEFLECTION DUE TO SUPERIMPOSED D.L. (FT.)**	0.000	-0.028	-0.057	-0.084	-0.110	-0.133	-0.152	-0.168	-0.180	-0.187	-0.189	-0.187	-0.180	-0.168	-0.152	-0.133	-0.110	-0.084	-0.057	-0.028	0.000
FINAL CAMBER (IN.)	0"	3/8"	11/16"	15/16"	1 3/16"	1 3/8"	1 1/2"	1 5/8"	1 11/16"	1 3/4"	1 3/4"	1 3/4"	1 11/16"	1 5/8"	1 1/2"	1 3/8"	1 3/16"	15/16"	11/16"	3/8"	0"

SPAN 4 GIRDER POSITION 2

CAMBER (GIRDER ALONE IN PLACE) (FT.)	0.000	0.063	0.119	0.168	0.209	0.245	0.273	0.295	0.311	0.320	0.324	0.320	0.311	0.295	0.273	0.245	0.209	0.168	0.119	0.063	0.000
DEFLECTION DUE TO SUPERIMPOSED D.L. (FT.)**	0.000	-0.023	-0.046	-0.069	-0.090	-0.108	-0.124	-0.137	-0.147	-0.152	-0.154	-0.152	-0.147	-0.137	-0.124	-0.108	-0.090	-0.069	-0.046	-0.023	0.000
FINAL CAMBER (IN.)	0"	1/2"	7/8"	1 3/16"	1 7/16"	1 5/8"	1 13/16"	1 7/8"	2"	2"	2 1/16"	2"	2"	1 7/8"	1 13/16"	1 5/8"	1 7/16"	1 3/16"	7/8"	1/2"	0"

SPAN 4 GIRDER POSITION 3

CAMBER (GIRDER ALONE IN PLACE) (FT.)	0.000	0.059	0.111	0.157	0.197	0.231	0.258	0.279	0.294	0.303	0.306	0.303	0.294	0.279	0.258	0.231	0.197	0.157	0.111	0.059	0.000
DEFLECTION DUE TO SUPERIMPOSED D.L. (FT.)**	0.000	-0.018	-0.036	-0.054	-0.071	-0.085	-0.098	-0.108	-0.116	-0.120	-0.122	-0.120	-0.116	-0.108	-0.098	-0.085	-0.071	-0.054	-0.036	-0.018	0.000
FINAL CAMBER (IN.)	0"	1/2"	7/8"	1 1/4"	1 1/2"	1 3/4"	1 15/16"	2 1/16"	2 1/8"	2 3/16"	2 3/16"	2 3/16"	2 1/8"	2 1/16"	1 15/16"	1 3/4"	1 1/2"	1 1/4"	7/8"	1/2"	0"

SPAN 4 GIRDER POSITION 4

CAMBER (GIRDER ALONE IN PLACE) (FT.)	0.000	0.055	0.104	0.147	0.184	0.215	0.241	0.261	0.275	0.284	0.287	0.284	0.275	0.261	0.241	0.215	0.184	0.147	0.104	0.055	0.000
DEFLECTION DUE TO SUPERIMPOSED D.L. (FT.)**	0.000	-0.014	-0.028	-0.041	-0.054	-0.065	-0.074	-0.082	-0.088	-0.091	-0.092	-0.091	-0.088	-0.082	-0.074	-0.065	-0.054	-0.041	-0.028	-0.014	0.000
FINAL CAMBER (IN.)	0"	1/2"	15/16"	1 1/4"	1 9/16"	1 13/16"	2"	2 1/8"	2 1/4"	2 5/16"	2 5/16"	2 5/16"	2 1/4"	2 1/8"	2"	1 13/16"	1 9/16"	1 1/4"	15/16"	1/2"	0"

** INCLUDES FUTURE WEARING SURFACE IN SUPERIMPOSED DEAD LOAD

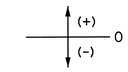

CAMBER SIGN CONVENTION

NORTH CAROLINA PROFESSIONAL SEAL 28479 ENGINEER KEVIN G. BAILEY
5-30-13

PROJECT NO. U-2524C
GUILFORD COUNTY
STATION: POT 407+73.35 -L-
= POT 29+32.06 -Y4-

SHEET 1 OF 7

STATE OF NORTH CAROLINA
DEPARTMENT OF TRANSPORTATION
RALEIGH

PRESTRESSED CONCRETE MODIFIED BULB TEE GIRDER CAMBERS

-LEFT LANE-

REVISIONS						SHEET NO.
NO.	BY:	DATE:	NO.	BY:	DATE:	S-133
1			3			TOTAL SHEETS
2			4			836

STV / Ralph Whitehead Associates, Inc.
1000 West Morehead St., Ste. 200
Charlotte, NC 28208
NC License No. F-0991

DRAWN BY : VMW DATE : 12-12
CHECKED BY : MFR DATE : 2-13
DESIGN ENGINEER OF RECORD: M. ROBBINS DATE : 5-13

5/30/2013 4:57:15 PM R:\station\Finals\PCMBT Girder Cambers Sheet 1 of 7.dgn

UNIT B CAMBER AND DEFLECTIONS TABLE

SPAN 4 GIRDER POSITION 5

TENTH POINTS	0.00	0.10	0.20	0.30	0.40	0.50	0.60	0.70	0.80	0.90	1.00
CAMBER (GIRDER ALONE IN PLACE) (FT.)	0.000	0.056	0.097	0.126	0.143	0.149	0.143	0.126	0.097	0.056	0.000
DEFLECTION DUE TO SUPERIMPOSED D.L. (FT.)**	0.000	-0.023	-0.045	-0.062	-0.073	-0.077	-0.073	-0.062	-0.045	-0.023	0.000
FINAL CAMBER (IN.)	0"	3/8"	5/8"	3/4"	13/16"	7/8"	13/16"	3/4"	5/8"	3/8"	0"

SPAN 4 GIRDER POSITION 6

CAMBER (GIRDER ALONE IN PLACE) (FT.)	0.000	0.052	0.091	0.119	0.135	0.141	0.135	0.119	0.091	0.052	0.000
DEFLECTION DUE TO SUPERIMPOSED D.L. (FT.)**	0.000	-0.018	-0.035	-0.049	-0.058	-0.061	-0.058	-0.049	-0.035	-0.018	0.000
FINAL CAMBER (IN.)	0"	7/16"	11/16"	13/16"	15/16"	15/16"	15/16"	13/16"	11/16"	7/16"	0"

SPAN 4 GIRDER POSITION 7

CAMBER (GIRDER ALONE IN PLACE) (FT.)	0.000	0.048	0.085	0.110	0.126	0.131	0.126	0.110	0.085	0.048	0.000
DEFLECTION DUE TO SUPERIMPOSED D.L. (FT.)**	0.000	-0.014	-0.027	-0.038	-0.044	-0.047	-0.044	-0.038	-0.027	-0.014	0.000
FINAL CAMBER (IN.)	0"	7/16"	11/16"	7/8"	1"	1"	1"	7/8"	11/16"	7/16"	0"

SPAN 5 GIRDER POSITION 1

TWENTIETH POINTS	0.00	0.05	0.10	0.15	0.20	0.25	0.30	0.35	0.40	0.45	0.50	0.55	0.60	0.65	0.70	0.75	0.80	0.85	0.90	0.95	1.00
CAMBER (GIRDER ALONE IN PLACE) (FT.)	0.000	0.063	0.118	0.166	0.208	0.243	0.272	0.294	0.309	0.319	0.322	0.319	0.309	0.294	0.272	0.243	0.208	0.166	0.118	0.063	0.000
DEFLECTION DUE TO SUPERIMPOSED D.L. (FT.)**	0.000	-0.023	-0.047	-0.070	-0.091	-0.110	-0.126	-0.139	-0.149	-0.154	-0.156	-0.154	-0.149	-0.139	-0.126	-0.110	-0.091	-0.070	-0.047	-0.023	0.000
FINAL CAMBER (IN.)	0"	1/2"	7/8"	1 3/16"	1 7/16"	1 5/8"	1 3/4"	1 7/8"	1 15/16"	2"	2"	2"	1 15/16"	1 7/8"	1 3/4"	1 5/8"	1 7/16"	1 3/16"	7/8"	1/2"	0"

SPAN 5 GIRDER POSITION 2

CAMBER (GIRDER ALONE IN PLACE) (FT.)	0.000	0.059	0.111	0.156	0.196	0.229	0.256	0.277	0.292	0.301	0.304	0.301	0.292	0.277	0.256	0.229	0.196	0.156	0.111	0.059	0.000
DEFLECTION DUE TO SUPERIMPOSED D.L. (FT.)**	0.000	-0.019	-0.038	-0.056	-0.073	-0.088	-0.101	-0.111	-0.119	-0.124	-0.125	-0.124	-0.119	-0.111	-0.101	-0.088	-0.073	-0.056	-0.038	-0.019	0.000
FINAL CAMBER (IN.)	0"	1/2"	7/8"	1 3/16"	1 1/2"	1 11/16"	1 7/8"	2"	2 1/16"	2 1/8"	2 1/8"	2 1/8"	2 1/16"	2"	1 7/8"	1 11/16"	1 1/2"	1 3/16"	7/8"	1/2"	0"

SPAN 5 GIRDER POSITION 3

TENTH POINTS	0.00	0.10	0.20	0.30	0.40	0.50	0.60	0.70	0.80	0.90	1.00
CAMBER (GIRDER ALONE IN PLACE) (FT.)	0.000	0.103	0.182	0.239	0.273	0.284	0.273	0.239	0.182	0.103	0.000
DEFLECTION DUE TO SUPERIMPOSED D.L. (FT.)**	0.000	-0.029	-0.057	-0.079	-0.092	-0.097	-0.092	-0.079	-0.057	-0.029	0.000
FINAL CAMBER (IN.)	0"	7/8"	1 1/2"	1 15/16"	2 3/16"	2 1/4"	2 3/16"	1 15/16"	1 1/2"	7/8"	0"

SPAN 5 GIRDER POSITION 4

CAMBER (GIRDER ALONE IN PLACE) (FT.)	0.000	0.055	0.097	0.126	0.143	0.148	0.143	0.126	0.097	0.055	0.000
DEFLECTION DUE TO SUPERIMPOSED D.L. (FT.)**	0.000	-0.022	-0.044	-0.061	-0.071	-0.075	-0.071	-0.061	-0.044	-0.022	0.000
FINAL CAMBER (IN.)	0"	3/8"	5/8"	3/4"	7/8"	7/8"	7/8"	3/4"	5/8"	3/8"	0"

SPAN 5 GIRDER POSITION 5

CAMBER (GIRDER ALONE IN PLACE) (FT.)	0.000	0.052	0.091	0.118	0.134	0.140	0.134	0.118	0.091	0.052	0.000
DEFLECTION DUE TO SUPERIMPOSED D.L. (FT.)**	0.000	-0.018	-0.035	-0.049	-0.057	-0.060	-0.057	-0.049	-0.035	-0.018	0.000
FINAL CAMBER (IN.)	0"	7/16"	11/16"	13/16"	15/16"	15/16"	15/16"	13/16"	11/16"	7/16"	0"

SPAN 5 GIRDER POSITION 6

CAMBER (GIRDER ALONE IN PLACE) (FT.)	0.000	0.048	0.084	0.109	0.125	0.130	0.125	0.109	0.084	0.048	0.000
DEFLECTION DUE TO SUPERIMPOSED D.L. (FT.)**	0.000	-0.014	-0.027	-0.038	-0.044	-0.047	-0.044	-0.038	-0.027	-0.014	0.000
FINAL CAMBER (IN.)	0"	3/8"	11/16"	7/8"	15/16"	1"	15/16"	7/8"	11/16"	3/8"	0"

SPAN 5 GIRDER POSITION 7

CAMBER (GIRDER ALONE IN PLACE) (FT.)	0.000	0.032	0.055	0.071	0.080	0.083	0.080	0.071	0.055	0.032	0.000
DEFLECTION DUE TO SUPERIMPOSED D.L. (FT.)**	0.000	-0.010	-0.020	-0.028	-0.033	-0.035	-0.033	-0.028	-0.020	-0.010	0.000
FINAL CAMBER (IN.)	0"	1/4"	7/16"	1/2"	9/16"	9/16"	9/16"	1/2"	7/16"	1/4"	0"

** INCLUDES FUTURE WEARING SURFACE IN SUPERIMPOSED DEAD LOAD

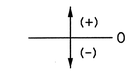

CAMBER SIGN CONVENTION

NORTH CAROLINA PROFESSIONAL SEAL 28479 ENGINEER KEVIN G. BAILEY 5-30-13

PROJECT NO. U-2524C

GUILFORD COUNTY

STATION: POT 407+73.35 -L-
= POT 29+32.06 -Y4-

SHEET 2 OF 7

STATE OF NORTH CAROLINA
DEPARTMENT OF TRANSPORTATION
RALEIGH

PRESTRESSED CONCRETE MODIFIED BULB TEE GIRDER CAMBERS

-LEFT LANE-

REVISIONS						SHEET NO.
NO.	BY:	DATE:	NO.	BY:	DATE:	S-134
1			3			TOTAL SHEETS
2			4			836

STV / Ralph Whitehead Associates, Inc.
1000 West Morehead St., Ste. 200
Charlotte, NC 28208
NC License No. F-0991

DRAWN BY : VMW DATE : 12-12
CHECKED BY : MFR DATE : 2-13

DESIGN ENGINEER OF RECORD: M. ROBBINS DATE : 5-13

5/30/2013 4:57:19 PM R:\ustation\Finals\PCMBT Girder Cambers Sheet 2 of 7.dgn

UNIT C CAMBER AND DEFLECTIONS TABLE

TENTH POINTS	0.00	0.10	0.20	0.30	0.40	0.50	0.60	0.70	0.80	0.90	1.00
SPAN 7 GIRDER POSITION 1											
CAMBER (GIRDER ALONE IN PLACE) (FT.)	0.000	0.015	0.026	0.033	0.038	0.039	0.038	0.033	0.026	0.015	0.000
DEFLECTION DUE TO SUPERIMPOSED D.L. (FT.)**	0.000	-0.003	-0.007	-0.010	-0.012	-0.012	-0.012	-0.010	-0.007	-0.003	0.000
FINAL CAMBER (IN.)	0"	1/8"	1/4"	5/16"	5/16"	5/16"	5/16"	5/16"	1/4"	1/8"	0"
SPAN 7 GIRDER POSITION 2											
CAMBER (GIRDER ALONE IN PLACE) (FT.)	0.000	0.017	0.029	0.038	0.043	0.044	0.043	0.038	0.029	0.017	0.000
DEFLECTION DUE TO SUPERIMPOSED D.L. (FT.)**	0.000	-0.005	-0.010	-0.014	-0.016	-0.017	-0.016	-0.014	-0.010	-0.005	0.000
FINAL CAMBER (IN.)	0"	1/8"	1/4"	5/16"	5/16"	5/16"	5/16"	5/16"	1/4"	1/8"	0"
SPAN 7 GIRDER POSITION 3											
CAMBER (GIRDER ALONE IN PLACE) (FT.)	0.000	0.027	0.047	0.061	0.068	0.071	0.068	0.061	0.047	0.027	0.000
DEFLECTION DUE TO SUPERIMPOSED D.L. (FT.)**	0.000	-0.007	-0.014	-0.019	-0.023	-0.024	-0.023	-0.019	-0.014	-0.007	0.000
FINAL CAMBER (IN.)	0"	1/4"	3/8"	1/2"	9/16"	9/16"	9/16"	1/2"	3/8"	1/4"	0"
SPAN 7 GIRDER POSITION 4											
CAMBER (GIRDER ALONE IN PLACE) (FT.)	0.000	0.031	0.054	0.070	0.079	0.082	0.079	0.070	0.054	0.031	0.000
DEFLECTION DUE TO SUPERIMPOSED D.L. (FT.)**	0.000	-0.009	-0.018	-0.026	-0.030	-0.032	-0.030	-0.026	-0.018	-0.009	0.000
FINAL CAMBER (IN.)	0"	1/4"	7/16"	1/2"	9/16"	5/8"	9/16"	1/2"	7/16"	1/4"	0"
SPAN 7 GIRDER POSITION 5											
CAMBER (GIRDER ALONE IN PLACE) (FT.)	0.000	0.034	0.058	0.075	0.085	0.088	0.085	0.075	0.058	0.034	0.000
DEFLECTION DUE TO SUPERIMPOSED D.L. (FT.)**	0.000	-0.013	-0.025	-0.035	-0.042	-0.044	-0.042	-0.035	-0.025	-0.013	0.000
FINAL CAMBER (IN.)	0"	1/4"	3/8"	1/2"	1/2"	1/2"	1/2"	1/2"	3/8"	1/4"	0"
SPAN 7 GIRDER POSITION 6											
CAMBER (GIRDER ALONE IN PLACE) (FT.)	0.000	0.055	0.097	0.126	0.144	0.149	0.144	0.126	0.097	0.055	0.000
DEFLECTION DUE TO SUPERIMPOSED D.L. (FT.)**	0.000	-0.017	-0.033	-0.046	-0.055	-0.058	-0.055	-0.046	-0.033	-0.017	0.000
FINAL CAMBER (IN.)	0"	7/16"	3/4"	15/16"	1 1/16"	1 1/8"	1 1/16"	15/16"	3/4"	7/16"	0"
SPAN 7 GIRDER POSITION 7											
CAMBER (GIRDER ALONE IN PLACE) (FT.)	0.000	0.060	0.105	0.135	0.154	0.160	0.154	0.135	0.105	0.060	0.000
DEFLECTION DUE TO SUPERIMPOSED D.L. (FT.)**	0.000	-0.022	-0.043	-0.059	-0.070	-0.074	-0.070	-0.059	-0.043	-0.022	0.000
FINAL CAMBER (IN.)	0"	7/16"	3/4"	15/16"	1"	1"	1"	15/16"	3/4"	7/16"	0"
SPAN 8 GIRDER POSITION 1											
CAMBER (GIRDER ALONE IN PLACE) (FT.)	0.000	0.026	0.046	0.060	0.068	0.071	0.068	0.060	0.046	0.026	0.000
DEFLECTION DUE TO SUPERIMPOSED D.L. (FT.)**	0.000	-0.006	-0.012	-0.017	-0.020	-0.021	-0.020	-0.017	-0.012	-0.006	0.000
FINAL CAMBER (IN.)	0"	1/4"	7/16"	1/2"	9/16"	9/16"	9/16"	1/2"	7/16"	1/4"	0"
SPAN 8 GIRDER POSITION 2											
CAMBER (GIRDER ALONE IN PLACE) (FT.)	0.000	0.031	0.054	0.070	0.079	0.082	0.079	0.070	0.054	0.031	0.000
DEFLECTION DUE TO SUPERIMPOSED D.L. (FT.)**	0.000	-0.010	-0.020	-0.027	-0.032	-0.034	-0.032	-0.027	-0.020	-0.010	0.000
FINAL CAMBER (IN.)	0"	1/4"	7/16"	1/2"	9/16"	9/16"	9/16"	1/2"	7/16"	1/4"	0"
SPAN 8 GIRDER POSITION 3											
CAMBER (GIRDER ALONE IN PLACE) (FT.)	0.000	0.054	0.094	0.123	0.139	0.145	0.139	0.123	0.094	0.054	0.000
DEFLECTION DUE TO SUPERIMPOSED D.L. (FT.)**	0.000	-0.015	-0.030	-0.042	-0.049	-0.052	-0.049	-0.042	-0.030	-0.015	0.000
FINAL CAMBER (IN.)	0"	7/16"	3/4"	1"	1 1/16"	1 1/8"	1 1/16"	1"	3/4"	7/16"	0"
SPAN 8 GIRDER POSITION 4											
CAMBER (GIRDER ALONE IN PLACE) (FT.)	0.000	0.061	0.106	0.137	0.156	0.162	0.156	0.137	0.106	0.061	0.000
DEFLECTION DUE TO SUPERIMPOSED D.L. (FT.)**	0.000	-0.022	-0.043	-0.060	-0.071	-0.074	-0.071	-0.060	-0.043	-0.022	0.000
FINAL CAMBER (IN.)	0"	7/16"	3/4"	15/16"	1"	1 1/16"	1"	15/16"	3/4"	7/16"	0"

** INCLUDES FUTURE WEARING SURFACE IN SUPERIMPOSED DEAD LOAD

CAMBER SIGN CONVENTION

PROJECT NO. U-2524C
GUILFORD COUNTY
STATION: POT 407+73.35 -L-
= POT 29+32.06 -Y4-

SHEET 3 OF 7

STATE OF NORTH CAROLINA
DEPARTMENT OF TRANSPORTATION
RALEIGH

PRESTRESSED CONCRETE
MODIFIED BULB TEE
GIRDER CAMBERS

-LEFT LANE-

NORTH CAROLINA PROFESSIONAL SEAL 28479 ENGINEER KEVIN G. BAILEY 5-30-13

STV / Ralph Whitehead Associates, Inc.
1000 West Morehead St., Ste. 200
Charlotte, NC 28208
NC License No. F-0991

REVISIONS						SHEET NO.
NO.	BY:	DATE:	NO.	BY:	DATE:	S-135
1			3			TOTAL SHEETS
2			4			836

DRAWN BY : VMW DATE : 12-12
CHECKED BY : MFR DATE : 2-13
DESIGN ENGINEER OF RECORD: M. ROBBINS DATE : 5-13

5/30/2013 4:57:23 PM R:\ustation\Finals\PCMBT Girder Cambers Sheet 3 of 7.dgn

UNIT C CAMBER AND DEFLECTIONS TABLE

TWENTIETH POINTS	0.00	0.05	0.10	0.15	0.20	0.25	0.30	0.35	0.40	0.45	0.50	0.55	0.60	0.65	0.70	0.75	0.80	0.85	0.90	0.95	1.00
SPAN 8 GIRDER POSITION 5																					
CAMBER (GIRDER ALONE IN PLACE) (FT.)	0.000	0.056	0.106	0.150	0.188	0.220	0.247	0.267	0.281	0.290	0.293	0.290	0.281	0.267	0.247	0.220	0.188	0.150	0.106	0.056	0.000
DEFLECTION DUE TO SUPERIMPOSED D.L. (FT.)**	0.000	-0.016	-0.032	-0.048	-0.063	-0.076	-0.087	-0.096	-0.103	-0.107	-0.108	-0.107	-0.103	-0.096	-0.087	-0.076	-0.063	-0.048	-0.032	-0.016	0.000
FINAL CAMBER (IN.)	0"	1/2"	7/8"	1 1/4"	1 1/2"	1 3/4"	1 15/16"	2 1/16"	2 1/8"	2 3/16"	2 3/16"	2 3/16"	2 1/8"	2 1/16"	1 15/16"	1 3/4"	1 1/2"	1 1/4"	7/8"	1/2"	0"
SPAN 8 GIRDER POSITION 6																					
CAMBER (GIRDER ALONE IN PLACE) (FT.)	0.000	0.062	0.117	0.166	0.207	0.242	0.270	0.292	0.308	0.317	0.320	0.317	0.308	0.292	0.270	0.242	0.207	0.166	0.117	0.062	0.000
DEFLECTION DUE TO SUPERIMPOSED D.L. (FT.)**	0.000	-0.023	-0.046	-0.068	-0.089	-0.107	-0.123	-0.136	-0.145	-0.151	-0.153	-0.151	-0.145	-0.136	-0.123	-0.107	-0.089	-0.068	-0.046	-0.023	0.000
FINAL CAMBER (IN.)	0"	1/2"	7/8"	1 3/16"	1 7/16"	1 5/8"	1 3/4"	1 7/8"	1 15/16"	2"	2"	2"	1 15/16"	1 7/8"	1 3/4"	1 5/8"	1 7/16"	1 3/16"	7/8"	1/2"	0"
SPAN 8 GIRDER POSITION 7																					
CAMBER (GIRDER ALONE IN PLACE) (FT.)	0.000	0.061	0.117	0.168	0.214	0.253	0.286	0.312	0.331	0.342	0.346	0.342	0.331	0.312	0.286	0.253	0.214	0.168	0.117	0.061	0.000
DEFLECTION DUE TO SUPERIMPOSED D.L. (FT.)**	0.000	-0.030	-0.060	-0.088	-0.115	-0.139	-0.160	-0.176	-0.188	-0.196	-0.198	-0.196	-0.188	-0.176	-0.160	-0.139	-0.115	-0.088	-0.060	-0.030	0.000
FINAL CAMBER (IN.)	0"	3/8"	11/16"	15/16"	1 3/16"	1 3/8"	1 1/2"	1 5/8"	1 11/16"	1 3/4"	1 3/4"	1 3/4"	1 11/16"	1 5/8"	1 1/2"	1 3/8"	1 3/16"	15/16"	11/16"	3/8"	0"

** INCLUDES FUTURE WEARING SURFACE IN SUPERIMPOSED DEAD LOAD

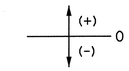

CAMBER SIGN CONVENTION

UNIT D CAMBER AND DEFLECTIONS TABLE

TWENTIETH POINTS	0.00	0.05	0.10	0.15	0.20	0.25	0.30	0.35	0.40	0.45	0.50	0.55	0.60	0.65	0.70	0.75	0.80	0.85	0.90	0.95	1.00
SPANS 9-11 GIRDER POSITION 1																					
CAMBER (GIRDER ALONE IN PLACE) (FT.)	0.000	0.078	0.149	0.213	0.268	0.315	0.354	0.384	0.406	0.419	0.424	0.419	0.406	0.384	0.354	0.315	0.268	0.213	0.149	0.078	0.000
DEFLECTION DUE TO SUPERIMPOSED D.L. (FT.)**	0.000	-0.037	-0.074	-0.110	-0.143	-0.172	-0.197	-0.217	-0.232	-0.241	-0.244	-0.241	-0.232	-0.217	-0.197	-0.172	-0.143	-0.110	-0.074	-0.037	0.000
FINAL CAMBER (IN.)	0"	1/2"	7/8"	1 1/4"	1 1/2"	1 11/16"	1 7/8"	2"	2 1/16"	2 1/8"	2 3/16"	2 1/8"	2 1/16"	2"	1 7/8"	1 11/16"	1 1/2"	1 1/4"	7/8"	1/2"	0"
SPANS 9-11 GIRDER POSITION 2, 3, 6, & 7																					
CAMBER (GIRDER ALONE IN PLACE) (FT.)	0.000	0.078	0.149	0.213	0.268	0.315	0.354	0.384	0.406	0.419	0.424	0.419	0.406	0.384	0.354	0.315	0.268	0.213	0.149	0.078	0.000
DEFLECTION DUE TO SUPERIMPOSED D.L. (FT.)**	0.000	-0.033	-0.066	-0.097	-0.126	-0.152	-0.174	-0.192	-0.205	-0.213	-0.216	-0.213	-0.205	-0.192	-0.174	-0.152	-0.126	-0.097	-0.066	-0.033	0.000
FINAL CAMBER (IN.)	0"	9/16"	1"	1 3/8"	1 11/16"	1 15/16"	2 1/8"	2 5/16"	2 7/16"	2 1/2"	2 1/2"	2 1/2"	2 7/16"	2 5/16"	2 1/8"	1 15/16"	1 11/16"	1 3/8"	1"	9/16"	0"
SPANS 9-11 GIRDER POSITION 4 & 5																					
CAMBER (GIRDER ALONE IN PLACE) (FT.)	0.000	0.078	0.149	0.213	0.268	0.315	0.354	0.384	0.406	0.419	0.424	0.419	0.406	0.384	0.354	0.315	0.268	0.213	0.149	0.078	0.000
DEFLECTION DUE TO SUPERIMPOSED D.L. (FT.)**	0.000	-0.031	-0.062	-0.091	-0.119	-0.143	-0.164	-0.181	-0.193	-0.201	-0.203	-0.201	-0.193	-0.181	-0.164	-0.143	-0.119	-0.091	-0.062	-0.031	0.000
FINAL CAMBER (IN.)	0"	9/16"	1 1/16"	1 7/16"	1 13/16"	2 1/16"	2 1/4"	2 7/16"	2 9/16"	2 5/8"	2 5/8"	2 5/8"	2 9/16"	2 7/16"	2 1/4"	2 1/16"	1 13/16"	1 7/16"	1 1/16"	9/16"	0"
SPANS 9-11 GIRDER POSITION 8																					
CAMBER (GIRDER ALONE IN PLACE) (FT.)	0.000	0.078	0.149	0.213	0.268	0.315	0.354	0.384	0.406	0.419	0.424	0.419	0.406	0.384	0.354	0.315	0.268	0.213	0.149	0.078	0.000
DEFLECTION DUE TO SUPERIMPOSED D.L. (FT.)**	0.000	-0.035	-0.071	-0.104	-0.135	-0.163	-0.187	-0.206	-0.220	-0.229	-0.231	-0.229	-0.220	-0.206	-0.187	-0.163	-0.135	-0.104	-0.071	-0.035	0.000
FINAL CAMBER (IN.)	0"	1/2"	15/16"	1 5/16"	1 9/16"	1 13/16"	2"	2 1/8"	2 1/4"	2 5/16"	2 5/16"	2 5/16"	2 1/4"	2 1/8"	2"	1 13/16"	1 9/16"	1 5/16"	15/16"	1/2"	0"

PROJECT NO. U-2524C

GUILFORD COUNTY

STATION: POT 407+73.35 -L-
= POT 29+32.06 -Y4-

SHEET 4 OF 7

NORTH CAROLINA PROFESSIONAL SEAL 28479 ENGINEER KEVIN G. BAILEY 5-30-13

STATE OF NORTH CAROLINA
DEPARTMENT OF TRANSPORTATION
RALEIGH

PRESTRESSED CONCRETE MODIFIED BULB TEE GIRDER CAMBERS

-LEFT LANE-

REVISIONS						SHEET NO.
NO.	BY:	DATE:	NO.	BY:	DATE:	S-136
1			3			TOTAL SHEETS
2			4			836

STV / Ralph Whitehead Associates, Inc.
1000 West Morehead St., Ste. 200
Charlotte, NC 28208
NC License No. F-0991

DRAWN BY : VMW DATE : 12-12
CHECKED BY : MFR DATE : 2-13

DESIGN ENGINEER OF RECORD: M. ROBBINS DATE : 5-13

5/30/2013 4:57:27 PM R:\station\Finals\PCMBT Girder Cambers Sheet 4 of 7.dgn

UNIT E CAMBER AND DEFLECTIONS TABLE

TWENTIETH POINTS	0.00	0.05	0.10	0.15	0.20	0.25	0.30	0.35	0.40	0.45	0.50	0.55	0.60	0.65	0.70	0.75	0.80	0.85	0.90	0.95	1.00
SPANS 12-14 GIRDER POSITION 1																					
CAMBER (GIRDER ALONE IN PLACE) (FT.)	0.000	0.079	0.150	0.213	0.269	0.316	0.355	0.385	0.407	0.420	0.424	0.420	0.407	0.385	0.355	0.316	0.269	0.213	0.150	0.079	0.000
DEFLECTION DUE TO SUPERIMPOSED D.L. (FT.)**	0.000	-0.036	-0.072	-0.107	-0.139	-0.167	-0.192	-0.211	-0.226	-0.235	-0.237	-0.235	-0.226	-0.211	-0.192	-0.167	-0.139	-0.107	-0.072	-0.036	0.000
FINAL CAMBER (IN.)	0"	1/2"	15/16"	1 1/4"	1 9/16"	1 3/4"	1 15/16"	2 1/16"	2 3/16"	2 1/4"	2 1/4"	2 1/4"	2 3/16"	2 1/16"	1 15/16"	1 3/4"	1 9/16"	1 1/4"	15/16"	1/2"	0"
SPANS 12-14 GIRDER POSITION 2, 3, 6, & 7																					
CAMBER (GIRDER ALONE IN PLACE) (FT.)	0.000	0.079	0.150	0.213	0.269	0.316	0.355	0.385	0.407	0.420	0.424	0.420	0.407	0.385	0.355	0.316	0.269	0.213	0.150	0.079	0.000
DEFLECTION DUE TO SUPERIMPOSED D.L. (FT.)**	0.000	-0.033	-0.065	-0.096	-0.125	-0.150	-0.172	-0.190	-0.203	-0.210	-0.213	-0.210	-0.203	-0.190	-0.172	-0.150	-0.125	-0.096	-0.065	-0.033	0.000
FINAL CAMBER (IN.)	0"	9/16"	1 1/16"	1 3/8"	1 3/4"	2"	2 3/16"	2 3/8"	2 7/16"	2 1/2"	2 9/16"	2 1/2"	2 7/16"	2 3/8"	2 3/16"	2"	1 3/4"	1 3/8"	1 1/16"	9/16"	0"
SPANS 12-14 GIRDER POSITION 4 & 5																					
CAMBER (GIRDER ALONE IN PLACE) (FT.)	0.000	0.079	0.150	0.213	0.269	0.316	0.355	0.385	0.407	0.420	0.424	0.420	0.407	0.385	0.355	0.316	0.269	0.213	0.150	0.079	0.000
DEFLECTION DUE TO SUPERIMPOSED D.L. (FT.)**	0.000	-0.031	-0.061	-0.090	-0.117	-0.141	-0.162	-0.178	-0.190	-0.198	-0.200	-0.198	-0.190	-0.178	-0.162	-0.141	-0.117	-0.090	-0.061	-0.031	0.000
FINAL CAMBER (IN.)	0"	9/16"	1 1/16"	1 1/2"	1 13/16"	2 1/8"	2 5/16"	2 1/2"	2 5/8"	2 11/16"	2 11/16"	2 11/16"	2 5/8"	2 1/2"	2 5/16"	2 1/8"	1 13/16"	1 1/2"	1 1/16"	9/16"	0"
SPANS 12-14 GIRDER POSITION 8																					
CAMBER (GIRDER ALONE IN PLACE) (FT.)	0.000	0.079	0.150	0.213	0.269	0.316	0.355	0.385	0.407	0.420	0.424	0.420	0.407	0.385	0.355	0.316	0.269	0.213	0.150	0.079	0.000
DEFLECTION DUE TO SUPERIMPOSED D.L. (FT.)**	0.000	-0.033	-0.066	-0.098	-0.127	-0.153	-0.175	-0.193	-0.206	-0.214	-0.217	-0.214	-0.206	-0.193	-0.175	-0.153	-0.127	-0.098	-0.066	-0.033	0.000
FINAL CAMBER (IN.)	0"	9/16"	1"	1 3/8"	1 11/16"	1 15/16"	2 1/8"	2 5/16"	2 7/16"	2 1/2"	2 1/2"	2 1/2"	2 7/16"	2 5/16"	2 1/8"	1 15/16"	1 11/16"	1 3/8"	1"	9/16"	0"

** INCLUDES FUTURE WEARING SURFACE IN SUPERIMPOSED DEAD LOAD

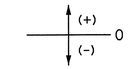

CAMBER SIGN CONVENTION

SPAN 15 CAMBER AND DEFLECTIONS TABLE

TWENTIETH POINTS	0.00	0.05	0.10	0.15	0.20	0.25	0.30	0.35	0.40	0.45	0.50	0.55	0.60	0.65	0.70	0.75	0.80	0.85	0.90	0.95	1.00
SPAN 15 GIRDER POSITION 1-3 & 6-8																					
CAMBER (GIRDER ALONE IN PLACE) (FT.)	0.000	0.061	0.116	0.166	0.211	0.249	0.280	0.305	0.323	0.334	0.337	0.334	0.323	0.305	0.280	0.249	0.211	0.166	0.116	0.061	0.000
DEFLECTION DUE TO SUPERIMPOSED D.L. (FT.)**	0.000	-0.028	-0.056	-0.083	-0.109	-0.132	-0.151	-0.167	-0.178	-0.186	-0.188	-0.186	-0.178	-0.167	-0.151	-0.132	-0.109	-0.083	-0.056	-0.028	0.000
FINAL CAMBER (IN.)	0"	3/8"	3/4"	1"	1 1/4"	1 3/8"	1 9/16"	1 11/16"	1 3/4"	1 3/4"	1 13/16"	1 3/4"	1 3/4"	1 11/16"	1 9/16"	1 3/8"	1 1/4"	1"	3/4"	3/8"	0"
SPAN 15 GIRDER POSITION 4 & 5																					
CAMBER (GIRDER ALONE IN PLACE) (FT.)	0.000	0.061	0.116	0.166	0.210	0.248	0.280	0.305	0.322	0.333	0.337	0.333	0.322	0.305	0.280	0.248	0.210	0.166	0.116	0.061	0.000
DEFLECTION DUE TO SUPERIMPOSED D.L. (FT.)**	0.000	-0.026	-0.052	-0.077	-0.100	-0.121	-0.139	-0.154	-0.165	-0.171	-0.173	-0.171	-0.165	-0.154	-0.139	-0.121	-0.100	-0.077	-0.052	-0.026	0.000
FINAL CAMBER (IN.)	0"	7/16"	3/4"	1 1/16"	1 5/16"	1 1/2"	1 11/16"	1 13/16"	1 7/8"	1 15/16"	1 15/16"	1 15/16"	1 7/8"	1 13/16"	1 11/16"	1 1/2"	1 5/16"	1 1/16"	3/4"	7/16"	0"

PROJECT NO. U-2524C

GUILFORD COUNTY

STATION: POT 407+73.35 -L-
= POT 29+32.06 -Y4-

SHEET 5 OF 7

NORTH CAROLINA PROFESSIONAL SEAL 28479 ENGINEER KEVIN G. BAILEY 5-30-13

STATE OF NORTH CAROLINA
DEPARTMENT OF TRANSPORTATION
RALEIGH

PRESTRESSED CONCRETE
MODIFIED BULB TEE
GIRDER CAMBERS

-LEFT LANE-

REVISIONS						SHEET NO.
NO.	BY:	DATE:	NO.	BY:	DATE:	S-137
1			3			TOTAL SHEETS
2			4			836

STV / Ralph Whitehead Associates, Inc.
1000 West Morehead St., Ste. 200
Charlotte, NC 28208
NC License No. F-0991

DRAWN BY : VMW DATE : 12-12
CHECKED BY : TJT DATE : 01-13
DESIGN ENGINEER OF RECORD: T. TOWNSEND DATE : 5-13

5/30/2013 4:57:31 PM R:\ustation\Finals\PCMBT Girder Cambers Sheet 5 of 7.dgn

SPAN 16 CAMBER AND DEFLECTIONS TABLE

TWENTIETH POINTS	0.00	0.05	0.10	0.15	0.20	0.25	0.30	0.35	0.40	0.45	0.50	0.55	0.60	0.65	0.70	0.75	0.80	0.85	0.90	0.95	1.00
SPAN 16 GIRDER POSITION 1																					
CAMBER (GIRDER ALONE IN PLACE) (FT.)	0.000	0.058	0.111	0.160	0.202	0.239	0.270	0.294	0.311	0.322	0.325	0.322	0.311	0.294	0.270	0.239	0.202	0.160	0.111	0.058	0.000
DEFLECTION DUE TO SUPERIMPOSED D.L. (FT.)**	0.000	-0.021	-0.043	-0.064	-0.083	-0.101	-0.116	-0.128	-0.137	-0.143	-0.144	-0.143	-0.137	-0.128	-0.116	-0.101	-0.083	-0.064	-0.043	-0.021	0.000
FINAL CAMBER (IN.)	0"	7/16"	13/16"	1 1/8"	1 7/16"	1 11/16"	1 7/8"	2"	2 1/16"	2 1/8"	2 3/16"	2 1/8"	2 1/16"	2"	1 7/8"	1 11/16"	1 7/16"	1 1/8"	13/16"	7/16"	0"
SPAN 16 GIRDER POSITION 2																					
CAMBER (GIRDER ALONE IN PLACE) (FT.)	0.000	0.059	0.113	0.162	0.205	0.242	0.273	0.297	0.314	0.325	0.329	0.325	0.314	0.297	0.273	0.242	0.205	0.162	0.113	0.059	0.000
DEFLECTION DUE TO SUPERIMPOSED D.L. (FT.)**	0.000	-0.021	-0.042	-0.063	-0.082	-0.099	-0.114	-0.126	-0.135	-0.141	-0.142	-0.141	-0.135	-0.126	-0.114	-0.099	-0.082	-0.063	-0.042	-0.021	0.000
FINAL CAMBER (IN.)	0"	7/16"	7/8"	1 3/16"	1 1/2"	1 11/16"	1 7/8"	2 1/16"	2 1/8"	2 3/16"	2 1/4"	2 3/16"	2 1/8"	2 1/16"	1 7/8"	1 11/16"	1 1/2"	1 3/16"	7/8"	7/16"	0"
SPAN 16 GIRDER POSITION 3																					
CAMBER (GIRDER ALONE IN PLACE) (FT.)	0.000	0.060	0.114	0.163	0.207	0.245	0.276	0.300	0.318	0.328	0.332	0.328	0.318	0.300	0.276	0.245	0.207	0.163	0.114	0.060	0.000
DEFLECTION DUE TO SUPERIMPOSED D.L. (FT.)**	0.000	-0.021	-0.043	-0.064	-0.084	-0.101	-0.117	-0.129	-0.138	-0.144	-0.145	-0.144	-0.138	-0.129	-0.117	-0.101	-0.084	-0.064	-0.043	-0.021	0.000
FINAL CAMBER (IN.)	0"	7/16"	7/8"	1 3/16"	1 1/2"	1 11/16"	1 15/16"	2 1/16"	2 3/16"	2 1/4"	2 1/4"	2 1/4"	2 3/16"	2 1/16"	1 15/16"	1 11/16"	1 1/2"	1 3/16"	7/8"	7/16"	0"
SPAN 16 GIRDER POSITION 4																					
CAMBER (GIRDER ALONE IN PLACE) (FT.)	0.000	0.060	0.115	0.165	0.209	0.247	0.279	0.303	0.321	0.332	0.336	0.332	0.321	0.303	0.279	0.247	0.209	0.165	0.115	0.060	0.000
DEFLECTION DUE TO SUPERIMPOSED D.L. (FT.)**	0.000	-0.024	-0.047	-0.071	-0.092	-0.112	-0.129	-0.142	-0.152	-0.158	-0.160	-0.158	-0.152	-0.142	-0.129	-0.112	-0.092	-0.071	-0.047	-0.024	0.000
FINAL CAMBER (IN.)	0"	7/16"	13/16"	1 1/8"	1 7/16"	1 5/8"	1 13/16"	1 15/16"	2"	2 1/16"	2 1/8"	2 1/16"	2"	1 15/16"	1 13/16"	1 5/8"	1 7/16"	1 1/8"	13/16"	7/16"	0"
SPAN 16 GIRDER POSITION 5																					
CAMBER (GIRDER ALONE IN PLACE) (FT.)	0.000	0.060	0.116	0.166	0.210	0.248	0.280	0.305	0.323	0.333	0.337	0.333	0.323	0.305	0.280	0.248	0.210	0.166	0.116	0.060	0.000
DEFLECTION DUE TO SUPERIMPOSED D.L. (FT.)**	0.000	-0.024	-0.048	-0.072	-0.094	-0.113	-0.130	-0.144	-0.154	-0.160	-0.162	-0.160	-0.154	-0.144	-0.130	-0.113	-0.094	-0.072	-0.048	-0.024	0.000
FINAL CAMBER (IN.)	0"	7/16"	13/16"	1 1/8"	1 3/8"	1 5/8"	1 13/16"	1 15/16"	2"	2 1/16"	2 1/8"	2 1/16"	2"	1 15/16"	1 13/16"	1 5/8"	1 3/8"	1 1/8"	13/16"	7/16"	0"
SPAN 16 GIRDER POSITION 6																					
CAMBER (GIRDER ALONE IN PLACE) (FT.)	0.000	0.060	0.116	0.166	0.210	0.248	0.280	0.304	0.322	0.333	0.337	0.333	0.322	0.304	0.280	0.248	0.210	0.166	0.116	0.060	0.000
DEFLECTION DUE TO SUPERIMPOSED D.L. (FT.)**	0.000	-0.022	-0.044	-0.065	-0.085	-0.103	-0.118	-0.131	-0.140	-0.145	-0.147	-0.145	-0.140	-0.131	-0.118	-0.103	-0.085	-0.065	-0.044	-0.022	0.000
FINAL CAMBER (IN.)	0"	7/16"	7/8"	1 3/16"	1 1/2"	1 3/4"	1 15/16"	2 1/16"	2 3/16"	2 1/4"	2 1/4"	2 1/4"	2 3/16"	2 1/16"	1 15/16"	1 3/4"	1 1/2"	1 3/16"	7/8"	7/16"	0"
SPAN 16 GIRDER POSITION 7																					
CAMBER (GIRDER ALONE IN PLACE) (FT.)	0.000	0.060	0.116	0.166	0.210	0.248	0.280	0.304	0.322	0.333	0.337	0.333	0.322	0.304	0.280	0.248	0.210	0.166	0.116	0.060	0.000
DEFLECTION DUE TO SUPERIMPOSED D.L. (FT.)**	0.000	-0.024	-0.049	-0.073	-0.095	-0.115	-0.132	-0.145	-0.156	-0.162	-0.164	-0.162	-0.156	-0.145	-0.132	-0.115	-0.095	-0.073	-0.049	-0.024	0.000
FINAL CAMBER (IN.)	0"	7/16"	13/16"	1 1/8"	1 3/8"	1 5/8"	1 3/4"	1 15/16"	2"	2 1/16"	2 1/16"	2 1/16"	2"	1 15/16"	1 3/4"	1 5/8"	1 3/8"	1 1/8"	13/16"	7/16"	0"
SPAN 16 GIRDER POSITION 8																					
CAMBER (GIRDER ALONE IN PLACE) (FT.)	0.000	0.060	0.116	0.166	0.210	0.248	0.280	0.304	0.322	0.333	0.337	0.333	0.322	0.304	0.280	0.248	0.210	0.166	0.116	0.060	0.000
DEFLECTION DUE TO SUPERIMPOSED D.L. (FT.)**	0.000	-0.028	-0.056	-0.083	-0.108	-0.131	-0.151	-0.166	-0.178	-0.185	-0.187	-0.185	-0.178	-0.166	-0.151	-0.131	-0.108	-0.083	-0.056	-0.028	0.000
FINAL CAMBER (IN.)	0"	3/8"	11/16"	1"	1 1/4"	1 3/8"	1 9/16"	1 11/16"	1 3/4"	1 3/4"	1 13/16"	1 3/4"	1 3/4"	1 11/16"	1 9/16"	1 3/8"	1 1/4"	1"	11/16"	3/8"	0"
SPAN 16 GIRDER POSITION 9																					
CAMBER (GIRDER ALONE IN PLACE) (FT.)	0.000	0.060	0.116	0.166	0.210	0.248	0.280	0.304	0.322	0.333	0.337	0.333	0.322	0.304	0.280	0.248	0.210	0.166	0.116	0.060	0.000
DEFLECTION DUE TO SUPERIMPOSED D.L. (FT.)**	0.000	-0.028	-0.057	-0.084	-0.110	-0.133	-0.153	-0.169	-0.180	-0.188	-0.190	-0.188	-0.180	-0.169	-0.153	-0.133	-0.110	-0.084	-0.057	-0.028	0.000
FINAL CAMBER (IN.)	0"	3/8"	11/16"	1"	1 3/16"	1 3/8"	1 1/2"	1 5/8"	1 11/16"	1 3/4"	1 3/4"	1 3/4"	1 11/16"	1 5/8"	1 1/2"	1 3/8"	1 3/16"	1"	11/16"	3/8"	0"
SPAN 16 GIRDER POSITION 10																					
CAMBER (GIRDER ALONE IN PLACE) (FT.)	0.000	0.060	0.116	0.166	0.210	0.248	0.280	0.304	0.322	0.333	0.337	0.333	0.322	0.304	0.280	0.248	0.210	0.166	0.116	0.060	0.000
DEFLECTION DUE TO SUPERIMPOSED D.L. (FT.)**	0.000	-0.029	-0.058	-0.086	-0.113	-0.136	-0.156	-0.173	-0.185	-0.192	-0.194	-0.192	-0.185	-0.173	-0.156	-0.136	-0.113	-0.086	-0.058	-0.029	0.000
FINAL CAMBER (IN.)	0"	3/8"	11/16"	15/16"	1 3/16"	1 3/8"	1 1/2"	1 9/16"	1 5/8"	1 11/16"	1 11/16"	1 11/16"	1 5/8"	1 9/16"	1 1/2"	1 3/8"	1 3/16"	15/16"	11/16"	3/8"	0"

** INCLUDES FUTURE WEARING SURFACE IN SUPERIMPOSED DEAD LOAD

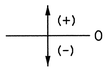

CAMBER SIGN CONVENTION

NORTH CAROLINA PROFESSIONAL SEAL 28479 ENGINEER KEVIN G. BAILEY
5-30-13

PROJECT NO. U-2524C
GUILFORD COUNTY
STATION: POT 407+73.35 -L-
= POT 29+32.06 -Y4-

SHEET 6 OF 7

STATE OF NORTH CAROLINA
DEPARTMENT OF TRANSPORTATION
RALEIGH

PRESTRESSED CONCRETE MODIFIED BULB TEE GIRDER CAMBERS

-LEFT LANE-

REVISIONS						SHEET NO.
NO.	BY:	DATE:	NO.	BY:	DATE:	S-138
1			3			TOTAL SHEETS
2			4			83

STV / Ralph Whitehead Associates, Inc.
1000 West Morehead St., Ste. 200
Charlotte, NC 28208
NC License No. F-0991

DRAWN BY : VMW DATE : 12-12
CHECKED BY : TJT DATE : 01-13
DESIGN ENGINEER OF RECORD: T. TOWNSEND DATE : 5-13

5/30/2013 4:57:36 PM R:\ustation\Finals\PCMBT Girder Cambers Sheet 6 of 7.dgn

UNIT F CAMBER AND DEFLECTIONS TABLE

SPANS 17-20 GIRDER POSITION 1-6

TWENTIETH POINTS	0.00	0.05	0.10	0.15	0.20	0.25	0.30	0.35	0.40	0.45	0.50	0.55	0.60	0.65	0.70	0.75	0.80	0.85	0.90	0.95	1.00
CAMBER (GIRDER ALONE IN PLACE) (FT.)	0.000	0.059	0.114	0.165	0.210	0.250	0.283	0.309	0.328	0.339	0.343	0.339	0.328	0.309	0.283	0.250	0.210	0.165	0.114	0.059	0.000
DEFLECTION DUE TO SUPERIMPOSED D.L. (FT.)**	0.000	-0.029	-0.058	-0.085	-0.111	-0.134	-0.153	-0.169	-0.181	-0.188"	-0.190	-0.188"	-0.181	-0.169	-0.153	-0.134	-0.111	-0.085	-0.058	-0.029	0.000
FINAL CAMBER (IN.)	0"	3/8"	11/16"	15/16"	1 3/16"	1 3/8"	1 9/16"	1 11/16"	1 3/4"	1 13/16"	1 13/16"	1 13/16"	1 3/4"	1 11/16"	1 9/16"	1 3/8"	1 3/16"	15/16"	11/16"	3/8"	0"

** INCLUDES FUTURE WEARING SURFACE IN SUPERIMPOSED DEAD LOAD

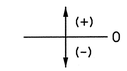

CAMBER SIGN CONVENTION

UNIT I CAMBER AND DEFLECTIONS TABLE

SPAN 27 GIRDER POSITION 1-6

TWENTIETH POINTS	0.00	0.05	0.10	0.15	0.20	0.25	0.30	0.35	0.40	0.45	0.50	0.55	0.60	0.65	0.70	0.75	0.80	0.85	0.90	0.95	1.00
CAMBER (GIRDER ALONE IN PLACE) (FT.)	0.000	0.058	0.108	0.157	0.193	0.231	0.256	0.280	0.295	0.304	0.309	0.304	0.295	0.280	0.256	0.231	0.193	0.157	0.108	0.058	0.000
DEFLECTION DUE TO SUPERIMPOSED D.L. (FT.)**	0.000	-0.022	-0.043	-0.064	-0.084	-0.101	-0.116	-0.127	-0.136	-0.141	-0.143	-0.141	-0.136	-0.127	-0.116	-0.101	-0.084	-0.064	-0.043	-0.022	0.000
FINAL CAMBER (IN.)	0"	7/16"	3/4"	1 1/8"	1 5/16"	1 9/16"	1 11/16"	1 13/16"	1 15/16"	1 15/16"	2"	1 15/16"	1 15/16"	1 13/16"	1 11/16"	1 9/16"	1 5/16"	1 1/8"	3/4"	7/16"	0"

SPAN 28 GIRDER POSITION 1-6

CAMBER (GIRDER ALONE IN PLACE) (FT.)	0.000	0.054	0.102	0.144	0.181	0.212	0.238	0.257	0.272	0.280	0.283	0.280	0.272	0.257	0.238	0.212	0.181	0.144	0.102	0.054	0.000
DEFLECTION DUE TO SUPERIMPOSED D.L. (FT.)**	0.000	-0.016	-0.032	-0.047	-0.061	-0.074	-0.085	-0.094	-0.100	-0.104	-0.105	-0.104	-0.100	-0.094	-0.085	-0.074	-0.061	-0.047	-0.032	-0.016	0.000
FINAL CAMBER (IN.)	0"	7/16"	13/16"	1 3/16"	1 7/16"	1 5/8"	1 13/16"	1 15/16"	2 1/16"	2 1/8"	2 1/8"	2 1/8"	2 1/16"	1 15/16"	1 13/16"	1 5/8"	1 7/16"	1 3/16"	13/16"	7/16"	0"

SPAN 29 GIRDER POSITION 1-6

CAMBER (GIRDER ALONE IN PLACE) (FT.)	0.000	0.060	0.115	0.162	0.204	0.239	0.267	0.290	0.306	0.315	0.318	0.315	0.306	0.290	0.267	0.239	0.204	0.162	0.115	0.060	0.000
DEFLECTION DUE TO SUPERIMPOSED D.L. (FT.)**	0.000	-0.025	-0.050	-0.075	-0.097	-0.117	-0.134	-0.148	-0.158	-0.164	-0.166	-0.164	-0.158	-0.148	-0.134	-0.117	-0.097	-0.075	-0.050	-0.025	0.000
FINAL CAMBER (IN.)	0"	7/16"	3/4"	1 1/16"	1 1/4"	1 7/16"	1 5/8"	1 11/16"	1 3/4"	1 13/16"	1 13/16"	1 13/16"	1 3/4"	1 11/16"	1 5/8"	1 7/16"	1 1/4"	1 1/16"	3/4"	7/16"	0"

SPAN 30 GIRDER POSITION 1-6

CAMBER (GIRDER ALONE IN PLACE) (FT.)	0.000	0.060	0.114	0.161	0.202	0.237	0.265	0.288	0.303	0.313	0.316	0.313	0.303	0.288	0.265	0.237	0.202	0.161	0.114	0.060	0.000
DEFLECTION DUE TO SUPERIMPOSED D.L. (FT.)**	0.000	-0.025	-0.049	-0.072	-0.094	-0.113	-0.129	-0.143	-0.152	-0.158	-0.160	-0.158	-0.152	-0.143	-0.129	-0.113	-0.094	-0.072	-0.049	-0.025	0.000
FINAL CAMBER (IN.)	0"	7/16"	3/4"	1 1/16"	1 5/16"	1 1/2"	1 5/8"	1 3/4"	1 13/16"	1 7/8"	1 7/8"	1 7/8"	1 13/16"	1 3/4"	1 5/8"	1 1/2"	1 5/16"	1 1/16"	3/4"	7/16"	0"

PROJECT NO. U-2524C

GUILFORD COUNTY

STATION: POT 407+73.35 -L-
= POT 29+32.06 -Y4-

SHEET 7 OF 7

NORTH CAROLINA PROFESSIONAL SEAL 28479 ENGINEER KEVIN G. BAILEY 5-30-13

STATE OF NORTH CAROLINA
DEPARTMENT OF TRANSPORTATION
RALEIGH

PRESTRESSED CONCRETE
MODIFIED BULB TEE
GIRDER CAMBERS

-LEFT LANE-

REVISIONS						SHEET NO.
NO.	BY:	DATE:	NO.	BY:	DATE:	S-139
1			3			TOTAL SHEETS
2			4			83

STV / Ralph Whitehead Associates, Inc.
1000 West Morehead St., Ste. 200
Charlotte, NC 28208
NC License No. F-0991

DRAWN BY : VMW DATE : 12-12
CHECKED BY : TJT DATE : 01-13

DESIGN ENGINEER OF RECORD: T. TOWNSEND DATE : 5-13

5/30/2013 4:57:41 PM R:\ustation\Finals\PCMBT Girder Cambers Sheet 7 of 7.dgn

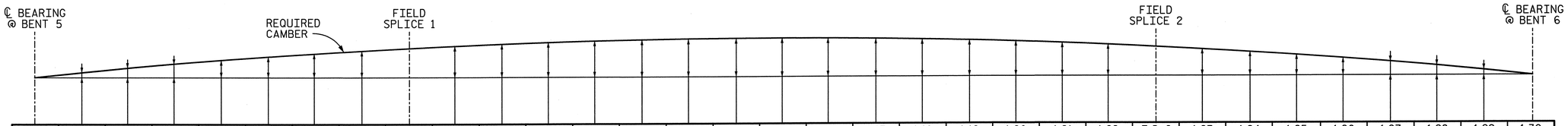

		1.00	1.01	1.02	1.03	1.04	1.05	1.06	1.07	F.S. 1	1.08	1.09	1.10	1.11	1.12	1.13	1.14	1.15	1.16	1.17	1.18	1.19	1.20	1.21	1.22	F.S. 2	1.23	1.24	1.25	1.26	1.27	1.28	1.29	1.30
GIRDER 1	DEFLECTION DUE TO WT. OF STEEL	0.000	-0.037	-0.073	-0.108	-0.142	-0.173	-0.201	-0.226	-0.240	-0.248	-0.267	-0.283	-0.296	-0.305	-0.312	-0.316	-0.318	-0.316	-0.311	-0.304	-0.293	-0.280	-0.264	-0.244	-0.236	-0.222	-0.197	-0.169	-0.138	-0.105	-0.071	-0.036	0.000
	DEFLECTION DUE TO WT. OF SLAB ▲	0.000	-0.060	-0.118	-0.174	-0.227	-0.276	-0.321	-0.361	-0.383	-0.395	-0.424	-0.449	-0.469	-0.484	-0.494	-0.500	-0.502	-0.499	-0.491	-0.479	-0.463	-0.442	-0.416	-0.386	-0.373	-0.351	-0.311	-0.266	-0.218	-0.166	-0.112	-0.057	0.000
	DEFL. DUE TO WT. OF BARRIER RAIL	0.000	-0.017	-0.033	-0.049	-0.064	-0.078	-0.091	-0.102	-0.108	-0.112	-0.120	-0.127	-0.133	-0.137	-0.140	-0.142	-0.142	-0.141	-0.139	-0.135	-0.131	-0.125	-0.117	-0.108	-0.105	-0.098	-0.087	-0.074	-0.061	-0.046	-0.031	-0.016	0.000
	TOTAL DEAD LOAD DEFLECTION	0.000	-0.114	-0.224	-0.331	-0.432	-0.527	-0.613	-0.689	-0.731	-0.755	-0.812	-0.859	-0.897	-0.926	-0.947	-0.958	-0.962	-0.956	-0.941	-0.918	-0.887	-0.846	-0.797	-0.739	-0.714	-0.671	-0.594	-0.509	-0.416	-0.317	-0.214	-0.108	0.000
	VERTICAL CURVE ORDINATE	0.000	0.000	0.000	0.000	0.000	0.000	0.000	0.000	0.000	0.000	0.000	0.000	0.000	0.000	0.000	0.000	0.000	0.000	0.000	0.000	0.000	0.000	0.000	0.000	0.000	0.000	0.000	0.000	0.000	0.000	0.000	0.000	0.000
	SUPERELEVATION ORDINATE	0.000	0.000	0.000	0.000	0.000	0.000	0.000	0.000	0.000	0.000	0.000	0.000	0.000	0.000	0.000	0.000	0.000	0.000	0.000	0.000	0.000	0.000	0.000	0.000	0.000	0.000	0.000	0.000	0.000	0.000	0.000	0.000	0.000
	REQUIRED CAMBER	0"	1 3/8"	2 11/16"	4"	5 3/16"	6 5/16"	7 3/8"	8 1/4"	8 3/4"	9 1/16"	9 3/4"	10 5/16"	10 3/4"	11 1/8"	11 3/8"	11 1/2"	11 9/16"	11 1/2"	11 5/16"	11"	10 5/8"	10 3/16"	9 9/16"	8 7/8"	8 9/16"	8 1/16"	7 1/8"	6 1/8"	5"	3 13/16"	2 9/16"	1 5/16"	0"
GIRDER 2	DEFLECTION DUE TO WT. OF STEEL	0.000	-0.036	-0.071	-0.105	-0.137	-0.167	-0.195	-0.219	-0.233	-0.241	-0.260	-0.275	-0.288	-0.298	-0.305	-0.309	-0.310	-0.308	-0.304	-0.297	-0.286	-0.274	-0.258	-0.239	-0.231	-0.217	-0.192	-0.165	-0.135	-0.103	-0.069	-0.035	0.000
	DEFLECTION DUE TO WT. OF SLAB ▲	0.000	-0.056	-0.112	-0.165	-0.216	-0.263	-0.306	-0.345	-0.366	-0.379	-0.408	-0.432	-0.451	-0.467	-0.477	-0.484	-0.486	-0.483	-0.476	-0.465	-0.449	-0.429	-0.405	-0.375	-0.363	-0.342	-0.303	-0.260	-0.212	-0.162	-0.110	-0.055	0.000
	DEFL. DUE TO WT. OF BARRIER RAIL	0.000	-0.015	-0.030	-0.045	-0.059	-0.072	-0.083	-0.094	-0.100	-0.104	-0.112	-0.119	-0.124	-0.129	-0.132	-0.134	-0.134	-0.134	-0.132	-0.129	-0.124	-0.119	-0.112	-0.104	-0.100	-0.094	-0.083	-0.071	-0.058	-0.045	-0.030	-0.015	0.000
	TOTAL DEAD LOAD DEFLECTION	0.000	-0.108	-0.212	-0.314	-0.411	-0.502	-0.584	-0.658	-0.700	-0.723	-0.779	-0.826	-0.864	-0.893	-0.914	-0.926	-0.930	-0.926	-0.912	-0.890	-0.860	-0.822	-0.774	-0.718	-0.694	-0.653	-0.579	-0.496	-0.406	-0.310	-0.209	-0.105	0.000
	VERTICAL CURVE ORDINATE	0.000	0.000	0.000	0.000	0.000	0.000	0.000	0.000	0.000	0.000	0.000	0.000	0.000	0.000	0.000	0.000	0.000	0.000	0.000	0.000	0.000	0.000	0.000	0.000	0.000	0.000	0.000	0.000	0.000	0.000	0.000	0.000	0.000
	SUPERELEVATION ORDINATE	0.000	0.000	0.000	0.000	0.000	0.000	0.000	0.000	0.000	0.000	0.000	0.000	0.000	0.000	0.000	0.000	0.000	0.000	0.000	0.000	0.000	0.000	0.000	0.000	0.000	0.000	0.000	0.000	0.000	0.000	0.000	0.000	0.000
	REQUIRED CAMBER	0"	1 5/16"	2 9/16"	3 3/4"	4 15/16"	6"	7"	7 7/8"	8 3/8"	8 11/16"	9 3/8"	9 15/16"	10 3/8"	10 11/16"	10 15/16"	11 1/8"	11 3/16"	11 1/8"	10 15/16"	10 11/16"	10 5/16"	9 7/8"	9 5/16"	8 5/8"	8 5/16"	7 13/16"	6 15/16"	5 15/16"	4 7/8"	3 11/16"	2 1/2"	1 1/4"	0"
GIRDER 3	DEFLECTION DUE TO WT. OF STEEL	0.000	-0.036	-0.071	-0.105	-0.138	-0.168	-0.195	-0.220	-0.233	-0.241	-0.259	-0.275	-0.287	-0.297	-0.304	-0.308	-0.309	-0.307	-0.302	-0.295	-0.285	-0.272	-0.256	-0.237	-0.230	-0.216	-0.191	-0.164	-0.134	-0.102	-0.069	-0.035	0.000
	DEFLECTION DUE TO WT. OF SLAB ▲	0.000	-0.056	-0.111	-0.164	-0.214	-0.260	-0.303	-0.340	-0.361	-0.373	-0.402	-0.425	-0.444	-0.459	-0.470	-0.476	-0.478	-0.475	-0.469	-0.458	-0.442	-0.423	-0.399	-0.370	-0.358	-0.337	-0.299	-0.256	-0.210	-0.160	-0.108	-0.054	0.000
	DEFL. DUE TO WT. OF BARRIER RAIL	0.000	-0.015	-0.029	-0.043	-0.056	-0.069	-0.080	-0.090	-0.096	-0.099	-0.107	-0.114	-0.119	-0.123	-0.127	-0.128	-0.129	-0.128	-0.127	-0.124	-0.119	-0.114	-0.107	-0.100	-0.096	-0.091	-0.080	-0.069	-0.056	-0.043	-0.029	-0.015	0.000
	TOTAL DEAD LOAD DEFLECTION	0.000	-0.107	-0.212	-0.312	-0.407	-0.497	-0.578	-0.651	-0.691	-0.714	-0.768	-0.814	-0.851	-0.880	-0.900	-0.912	-0.916	-0.911	-0.898	-0.876	-0.847	-0.809	-0.762	-0.707	-0.684	-0.643	-0.570	-0.488	-0.400	-0.305	-0.206	-0.103	0.000
	VERTICAL CURVE ORDINATE	0.000	0.000	0.000	0.000	0.000	0.000	0.000	0.000	0.000	0.000	0.000	0.000	0.000	0.000	0.000	0.000	0.000	0.000	0.000	0.000	0.000	0.000	0.000	0.000	0.000	0.000	0.000	0.000	0.000	0.000	0.000	0.000	0.000
	SUPERELEVATION ORDINATE	0.000	0.000	0.000	0.000	0.000	0.000	0.000	0.000	0.000	0.000	0.000	0.000	0.000	0.000	0.000	0.000	0.000	0.000	0.000	0.000	0.000	0.000	0.000	0.000	0.000	0.000	0.000	0.000	0.000	0.000	0.000	0.000	0.000
	REQUIRED CAMBER	0"	1 1/4"	2 9/16"	3 3/4"	4 7/8"	5 15/16"	6 15/16"	7 13/16"	8 5/16"	8 9/16"	9 1/4"	9 3/4"	10 3/16"	10 9/16"	10 13/16"	10 15/16"	11"	10 15/16"	10 3/4"	10 1/2"	10 3/16"	9 11/16"	9 1/8"	8 1/2"	8 3/16"	7 11/16"	6 13/16"	5 7/8"	4 13/16"	3 11/16"	2 1/2"	1 1/4"	0"
GIRDER 4	DEFLECTION DUE TO WT. OF STEEL	0.000	-0.037	-0.074	-0.109	-0.142	-0.173	-0.201	-0.226	-0.240	-0.247	-0.266	-0.281	-0.294	-0.303	-0.310	-0.314	-0.314	-0.312	-0.307	-0.299	-0.289	-0.276	-0.259	-0.240	-0.232	-0.218	-0.193	-0.166	-0.135	-0.103	-0.070	-0.035	0.000
	DEFLECTION DUE TO WT. OF SLAB ▲	0.000	-0.057	-0.112	-0.166	-0.216	-0.263	-0.306	-0.344	-0.365	-0.376	-0.405	-0.428	-0.447	-0.461	-0.472	-0.477	-0.479	-0.476	-0.469	-0.457	-0.442	-0.422	-0.398	-0.369	-0.357	-0.336	-0.298	-0.256	-0.210	-0.160	-0.108	-0.054	0.000
	DEFL. DUE TO WT. OF BARRIER RAIL	0.000	-0.015	-0.029	-0.043	-0.056	-0.068	-0.080	-0.090	-0.096	-0.099	-0.106	-0.113	-0.118	-0.122	-0.125	-0.127	-0.127	-0.126	-0.124	-0.121	-0.117	-0.112	-0.105	-0.097	-0.094	-0.088	-0.078	-0.067	-0.055	-0.042	-0.028	-0.014	0.000
	TOTAL DEAD LOAD DEFLECTION	0.000	-0.109	-0.215	-0.318	-0.414	-0.504	-0.587	-0.660	-0.700	-0.723	-0.777	-0.822	-0.859	-0.887	-0.906	-0.918	-0.920	-0.915	-0.901	-0.878	-0.848	-0.809	-0.762	-0.707	-0.684	-0.643	-0.570	-0.488	-0.400	-0.305	-0.206	-0.104	0.000
	VERTICAL CURVE ORDINATE	0.000	0.000	0.000	0.000	0.000	0.000	0.000	0.000	0.000	0.000	0.000	0.000	0.000	0.000	0.000	0.000	0.000	0.000	0.000	0.000	0.000	0.000	0.000	0.000	0.000	0.000	0.000	0.000	0.000	0.000	0.000	0.000	0.000
	SUPERELEVATION ORDINATE	0.000	0.000	0.000	0.000	0.000	0.000	0.000	0.000	0.000	0.000	0.000	0.000	0.000	0.000	0.000	0.000	0.000	0.000	0.000	0.000	0.000	0.000	0.000	0.000	0.000	0.000	0.000	0.000	0.000	0.000	0.000	0.000	0.000
	REQUIRED CAMBER	0"	1 5/16"	2 9/16"	3 13/16"	5"	6 1/16"	7 1/16"	7 15/16"	8 3/8"	8 11/16"	9 5/16"	9 7/8"	10 5/16"	10 5/8"	10 7/8"	11"	11 1/16"	11"	10 13/16"	10 9/16"	10 3/16"	9 11/16"	9 1/8"	8 1/2"	8 3/16"	7 11/16"	6 13/16"	5 7/8"	4 13/16"	3 11/16"	2 1/2"	1 1/4"	0"

SCHEMATIC CAMBER ORDINATES - SPAN 6

▲ INCLUDES SLAB, BUILDUP AND STAY-IN-PLACE FORMS

NOTES:

1. VALUES ARE SHOWN IN FEET (DECIMAL FORMAT), EXCEPT "REQUIRED CAMBER" WHICH IS GIVEN IN INCHES.
2. FOR GIRDER DESIGNATIONS, SEE FRAMING PLAN AND GIRDER DETAILS SHEETS.
3. DEFLECTIONS IN THE DOWNWARD DIRECTION ARE NEGATIVE. A REQUIRED CAMBER IN THE UPWARD DIRECTION IS POSITIVE. SIGN CONVENTION FOR DEAD LOAD DEFLECTION.

4. SLOPE FOR THE ZERO CAMBER BASE LINE VARIES.

PROJECT NO. U-2524C
GUILFORD COUNTY
STATION: POT 407+73.35 -L-
= POT 29+32.06 -Y4-

SHEET 1 OF 8

STATE OF NORTH CAROLINA
DEPARTMENT OF TRANSPORTATION
RALEIGH

STEEL GIRDER CAMBERS
SPAN 6

-LEFT LANE-

NORTH CAROLINA PROFESSIONAL SEAL 28479 ENGINEER KEVIN G. BAILEY
5-30-13

STV / Ralph Whitehead Associates, Inc.
1000 West Morehead St., Ste. 200
Charlotte, NC 28208
NC License No. F-0991

REVISIONS						SHEET NO.
NO.	BY:	DATE:	NO.	BY:	DATE:	S-140
1			3			TOTAL SHEETS
2			4			836

DRAWN BY : ACA DATE : 4-13
CHECKED BY : TJT DATE : 4-13
DESIGN ENGINEER OF RECORD: K. BAILEY DATE : 5-13

5/30/2013 4:57:45 PM R:\ustation\Finals\Span 6 - Camber Sheet 1of 2.dgn

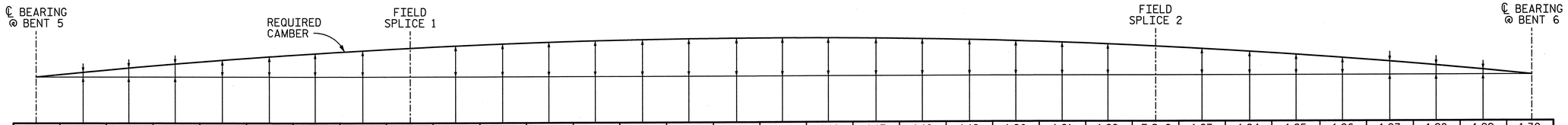

		1.00	1.01	1.02	1.03	1.04	1.05	1.06	1.07	F.S. 1	1.08	1.09	1.10	1.11	1.12	1.13	1.14	1.15	1.16	1.17	1.18	1.19	1.20	1.21	1.22	F.S. 2	1.23	1.24	1.25	1.26	1.27	1.28	1.29	1.30
GIRDER 5	DEFLECTION DUE TO WT. OF STEEL	0.000	-0.039	-0.077	-0.114	-0.149	-0.181	-0.210	-0.237	-0.251	-0.259	-0.279	-0.295	-0.308	-0.317	-0.324	-0.328	-0.328	-0.326	-0.320	-0.312	-0.300	-0.286	-0.269	-0.249	-0.240	-0.226	-0.200	-0.171	-0.140	-0.107	-0.072	-0.036	0.000
	DEFLECTION DUE TO WT. OF SLAB ▲	0.000	-0.058	-0.115	-0.170	-0.222	-0.270	-0.314	-0.353	-0.375	-0.387	-0.416	-0.440	-0.459	-0.474	-0.484	-0.490	-0.491	-0.487	-0.479	-0.467	-0.451	-0.430	-0.405	-0.375	-0.363	-0.341	-0.302	-0.259	-0.212	-0.162	-0.110	-0.055	0.000
	DEFL. DUE TO WT. OF BARRIER RAIL	0.000	-0.015	-0.030	-0.044	-0.058	-0.071	-0.082	-0.093	-0.098	-0.102	-0.110	-0.116	-0.121	-0.125	-0.128	-0.130	-0.130	-0.129	-0.127	-0.123	-0.119	-0.113	-0.106	-0.098	-0.095	-0.089	-0.079	-0.067	-0.055	-0.042	-0.028	-0.014	0.000
	TOTAL DEAD LOAD DEFLECTION	0.000	-0.113	-0.223	-0.328	-0.428	-0.522	-0.607	-0.682	-0.724	-0.748	-0.804	-0.851	-0.888	-0.917	-0.936	-0.947	-0.949	-0.942	-0.927	-0.902	-0.870	-0.829	-0.780	-0.722	-0.698	-0.656	-0.581	-0.498	-0.407	-0.311	-0.210	-0.106	0.000
	VERTICAL CURVE ORDINATE	0.000	0.000	0.000	0.000	0.000	0.000	0.000	0.000	0.000	0.000	0.000	0.000	0.000	0.000	0.000	0.000	0.000	0.000	0.000	0.000	0.000	0.000	0.000	0.000	0.000	0.000	0.000	0.000	0.000	0.000	0.000	0.000	0.000
	SUPERELEVATION ORDINATE	0.000	0.000	0.000	0.000	0.000	0.000	0.000	0.000	0.000	0.000	0.000	0.000	0.000	0.000	0.000	0.000	0.000	0.000	0.000	0.000	0.000	0.000	0.000	0.000	0.000	0.000	0.000	0.000	0.000	0.000	0.000	0.000	0.000
	REQUIRED CAMBER	0"	1 3/8"	2 11/16"	3 15/16"	5 1/8"	6 1/4"	7 5/16"	8 3/16"	8 11/16"	9"	9 5/8"	10 3/16"	10 5/8"	11"	11 1/4"	11 3/8"	11 3/8"	11 5/16"	11 1/8"	10 13/16"	10 7/16"	9 15/16"	9 3/8"	8 11/16"	8 3/8"	7 7/8"	7"	6"	4 7/8"	3 3/4"	2 1/2"	1 1/4"	0"
GIRDER 6	DEFLECTION DUE TO WT. OF STEEL	0.000	-0.041	-0.081	-0.120	-0.156	-0.190	-0.222	-0.250	-0.266	-0.274	-0.296	-0.314	-0.328	-0.339	-0.346	-0.351	-0.351	-0.349	-0.343	-0.334	-0.322	-0.306	-0.287	-0.265	-0.256	-0.240	-0.212	-0.181	-0.148	-0.113	-0.076	-0.038	0.000
	DEFLECTION DUE TO WT. OF SLAB ▲	0.000	-0.061	-0.119	-0.176	-0.229	-0.279	-0.325	-0.366	-0.389	-0.402	-0.433	-0.459	-0.480	-0.496	-0.507	-0.513	-0.515	-0.511	-0.503	-0.490	-0.472	-0.450	-0.423	-0.391	-0.378	-0.354	-0.313	-0.268	-0.219	-0.167	-0.113	-0.057	0.000
	DEFL. DUE TO WT. OF BARRIER RAIL	0.000	-0.016	-0.031	-0.046	-0.061	-0.074	-0.086	-0.097	-0.103	-0.107	-0.115	-0.122	-0.128	-0.132	-0.135	-0.137	-0.138	-0.137	-0.134	-0.131	-0.126	-0.120	-0.112	-0.103	-0.100	-0.093	-0.082	-0.070	-0.057	-0.044	-0.029	-0.015	0.000
	TOTAL DEAD LOAD DEFLECTION	0.000	-0.118	-0.232	-0.342	-0.446	-0.544	-0.633	-0.713	-0.758	-0.783	-0.844	-0.895	-0.936	-0.967	-0.989	1.001	1.004	-0.997	-0.980	-0.955	-0.920	-0.876	-0.823	-0.760	-0.734	-0.688	-0.608	-0.520	-0.424	-0.324	-0.218	-0.110	0.000
	VERTICAL CURVE ORDINATE	0.000	0.000	0.000	0.000	0.000	0.000	0.000	0.000	0.000	0.000	0.000	0.000	0.000	0.000	0.000	0.000	0.000	0.000	0.000	0.000	0.000	0.000	0.000	0.000	0.000	0.000	0.000	0.000	0.000	0.000	0.000	0.000	0.000
	SUPERELEVATION ORDINATE	0.000	0.000	0.000	0.000	0.000	0.000	0.000	0.000	0.000	0.000	0.000	0.000	0.000	0.000	0.000	0.000	0.000	0.000	0.000	0.000	0.000	0.000	0.000	0.000	0.000	0.000	0.000	0.000	0.000	0.000	0.000	0.000	0.000
	REQUIRED CAMBER	0"	1 7/16"	2 13/16"	4 1/8"	5 3/8"	6 1/2"	7 9/16"	8 9/16"	9 1/8"	9 3/8"	10 1/8"	10 3/4"	11 1/4"	11 5/8"	11 7/8"	1'-0"	1'-0 1/16"	11 15/16"	11 3/4"	11 7/16"	11 1/16"	10 1/2"	9 7/8"	9 1/8"	8 13/16"	8 1/4"	7 5/16"	6 1/4"	5 1/16"	3 7/8"	2 5/8"	1 5/16"	0"
GIRDER 7	DEFLECTION DUE TO WT. OF STEEL	0.000	-0.043	-0.085	-0.126	-0.165	-0.201	-0.235	-0.265	-0.282	-0.292	-0.316	-0.336	-0.352	-0.365	-0.374	-0.380	-0.382	-0.381	-0.375	-0.367	-0.354	-0.338	-0.319	-0.295	-0.286	-0.268	-0.238	-0.204	-0.167	-0.128	-0.086	-0.044	0.000
	DEFLECTION DUE TO WT. OF SLAB ▲	0.000	-0.063	-0.124	-0.183	-0.239	-0.292	-0.340	-0.384	-0.408	-0.423	-0.456	-0.485	-0.508	-0.526	-0.539	-0.547	-0.549	-0.547	-0.539	-0.527	-0.509	-0.486	-0.458	-0.425	-0.411	-0.386	-0.342	-0.293	-0.240	-0.184	-0.124	-0.063	0.000
	DEFL. DUE TO WT. OF BARRIER RAIL	0.000	-0.017	-0.033	-0.049	-0.064	-0.078	-0.091	-0.103	-0.109	-0.113	-0.123	-0.130	-0.137	-0.142	-0.145	-0.148	-0.148	-0.148	-0.146	-0.142	-0.137	-0.131	-0.123	-0.114	-0.110	-0.103	-0.091	-0.078	-0.064	-0.049	-0.033	-0.017	0.000
	TOTAL DEAD LOAD DEFLECTION	0.000	-0.123	-0.242	-0.358	-0.468	-0.570	-0.666	-0.752	-0.800	-0.828	-0.895	-0.951	-0.997	1.033	1.059	1.074	1.080	1.075	1.060	1.035	1.000	-0.956	-0.900	-0.834	-0.806	-0.757	-0.671	-0.575	-0.471	-0.361	-0.244	-0.123	0.000
	VERTICAL CURVE ORDINATE	0.000	0.000	0.000	0.000	0.000	0.000	0.000	0.000	0.000	0.000	0.000	0.000	0.000	0.000	0.000	0.000	0.000	0.000	0.000	0.000	0.000	0.000	0.000	0.000	0.000	0.000	0.000	0.000	0.000	0.000	0.000	0.000	0.000
	SUPERELEVATION ORDINATE	0.000	0.000	0.000	0.000	0.000	0.000	0.000	0.000	0.000	0.000	0.000	0.000	0.000	0.000	0.000	0.000	0.000	0.000	0.000	0.000	0.000	0.000	0.000	0.000	0.000	0.000	0.000	0.000	0.000	0.000	0.000	0.000	0.000
	REQUIRED CAMBER	0"	1 1/2"	2 7/8"	4 5/16"	5 5/8"	6 7/8"	8"	9"	9 5/8"	9 15/16"	10 3/4"	11 7/16"	11 15/16"	1'-0 3/8"	1'-0 11/16"	1'-0 7/8"	1'-0 15/16"	1'-0 7/8"	1'-0 3/4"	1'-0 7/16"	1'-0"	11 7/16"	10 13/16"	10"	9 11/16"	9 1/16"	8 1/16"	6 7/8"	5 5/8"	4 5/16"	2 15/16"	1 1/2"	0"

SCHEMATIC CAMBER ORDINATES - SPAN 6

▲ INCLUDES SLAB, BUILDUP AND STAY-IN-PLACE FORMS

NOTES:

1. VALUES ARE SHOWN IN FEET (DECIMAL FORMAT), EXCEPT "REQUIRED CAMBER" WHICH IS GIVEN IN INCHES.
2. FOR GIRDER DESIGNATIONS, SEE FRAMING PLAN AND GIRDER DETAILS SHEETS.
3. DEFLECTIONS IN THE DOWNWARD DIRECTION ARE NEGATIVE. A REQUIRED CAMBER IN THE UPWARD DIRECTION IS POSITIVE. SIGN CONVENTION FOR DEAD LOAD DEFLECTION.

4. SLOPE FOR THE ZERO CAMBER BASE LINE VARIES.

NORTH CAROLINA PROFESSIONAL SEAL 28479 ENGINEER KEVIN G. BAILEY
5-30-13

STV / Ralph Whitehead Associates, Inc.
1000 West Morehead St., Ste. 200
Charlotte, NC 28208
NC License No. F-0991

PROJECT NO. U-2524C
GUILFORD COUNTY
STATION: POT 407+73.35 -L-
= POT 29+32.06 -Y4-
SHEET 2 OF 8

STATE OF NORTH CAROLINA
DEPARTMENT OF TRANSPORTATION
RALEIGH

STEEL GIRDER CAMBERS
SPAN 6

-LEFT LANE-

REVISIONS						SHEET NO.
NO.	BY:	DATE:	NO.	BY:	DATE:	S-141
1			3			TOTAL SHEETS
2			4			836

DRAWN BY : ACA DATE : 4-13
CHECKED BY : TJT DATE : 4-13
DESIGN ENGINEER OF RECORD: T. TOWNSEND DATE : 5-13

5/30/2013 4:57:49 PM R:\ustation\Finals\Span 6 - Camber Sheet 2 of 2.dgn

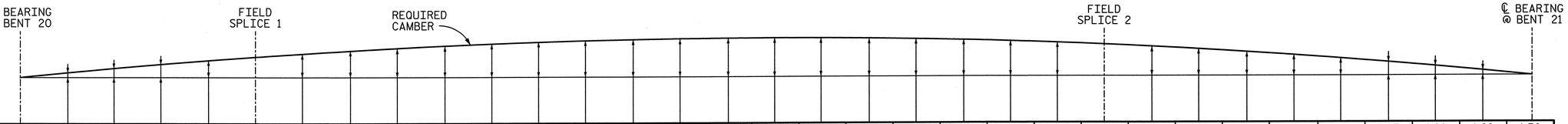

		1.00	1.01	1.02	1.03	1.04	F.S. 1	1.05	1.06	1.07	1.08	1.09	1.10	1.11	1.12	1.13	1.14	1.15	1.16	1.17	1.18	1.19	1.20	1.21	F.S. 2	1.22	1.23	1.24	1.25	1.26	1.27	1.28	1.29	1.30
GIRDER 1	DEFLECTION DUE TO WT. OF STEEL	0.000	-0.016	-0.031	-0.047	-0.059	-0.066	-0.071	-0.084	-0.092	-0.100	-0.108	-0.110	-0.113	-0.116	-0.114	-0.111	-0.109	-0.102	-0.095	-0.088	-0.079	-0.069	-0.059	-0.059	-0.050	-0.040	-0.030	-0.023	-0.015	-0.008	-0.005	-0.003	0.000
	DEFLECTION DUE TO WT. OF SLAB ▲	0.000	-0.043	-0.086	-0.129	-0.163	-0.181	-0.197	-0.231	-0.253	-0.275	-0.296	-0.304	-0.312	-0.319	-0.312	-0.306	-0.299	-0.280	-0.262	-0.243	-0.217	-0.191	-0.165	-0.163	-0.138	-0.112	-0.085	-0.065	-0.045	-0.024	-0.016	-0.008	0.000
	DEFL. DUE TO WT. OF BARRIER RAIL	0.000	-0.013	-0.026	-0.038	-0.049	-0.054	-0.059	-0.069	-0.076	-0.083	-0.090	-0.092	-0.095	-0.097	-0.096	-0.094	-0.092	-0.087	-0.081	-0.076	-0.068	-0.060	-0.052	-0.051	-0.043	-0.035	-0.026	-0.019	-0.013	-0.006	-0.004	-0.002	0.000
	TOTAL DEAD LOAD DEFLECTION	0.000	-0.071	-0.143	-0.214	-0.271	-0.301	-0.327	-0.384	-0.421	-0.457	-0.494	-0.507	-0.520	-0.533	-0.522	-0.511	-0.500	-0.469	-0.438	-0.407	-0.363	-0.320	-0.276	-0.273	-0.231	-0.186	-0.141	-0.107	-0.073	-0.039	-0.026	-0.013	0.000
	VERTICAL CURVE ORDINATE	0.000	0.000	0.000	0.000	0.000	0.000	0.000	0.000	0.000	0.000	0.000	0.000	0.000	0.000	0.000	0.000	0.000	0.000	0.000	0.000	0.000	0.000	0.000	0.000	0.000	0.000	0.000	0.000	0.000	0.000	0.000	0.000	0.000
	REQUIRED CAMBER	0"	7/8"	11 11/16"	2 9/16"	3 1/4"	3 5/8"	3 15/16"	4 5/8"	5 1/16"	5 1/2"	5 15/16"	6 1/16"	6 1/4"	6 3/8"	6 1/4"	6 1/8"	6"	5 5/8"	5 1/4"	4 7/8"	4 3/8"	3 13/16"	3 5/16"	3 1/4"	2 3/4"	2 1/4"	1 11/16"	1 5/16"	7/8"	7/16"	5/16"	1/8"	0"
GIRDER 2	DEFLECTION DUE TO WT. OF STEEL	0.000	-0.016	-0.033	-0.049	-0.062	-0.069	-0.075	-0.088	-0.096	-0.104	-0.113	-0.115	-0.118	-0.121	-0.119	-0.116	-0.114	-0.106	-0.099	-0.092	-0.082	-0.072	-0.062	-0.061	-0.052	-0.042	-0.031	-0.024	-0.016	-0.008	-0.006	-0.003	0.000
	DEFLECTION DUE TO WT. OF SLAB ▲	0.000	-0.043	-0.086	-0.129	-0.163	-0.181	-0.197	-0.231	-0.253	-0.275	-0.296	-0.304	-0.312	-0.319	-0.312	-0.306	-0.299	-0.280	-0.262	-0.243	-0.217	-0.191	-0.165	-0.163	-0.138	-0.112	-0.085	-0.065	-0.045	-0.024	-0.016	-0.008	0.000
	DEFL. DUE TO WT. OF BARRIER RAIL	0.000	-0.011	-0.022	-0.032	-0.041	-0.046	-0.050	-0.058	-0.064	-0.070	-0.076	-0.078	-0.080	-0.082	-0.081	-0.079	-0.078	-0.073	-0.069	-0.064	-0.057	-0.051	-0.044	-0.043	-0.037	-0.029	-0.022	-0.016	-0.011	-0.005	-0.004	-0.002	0.000
	TOTAL DEAD LOAD DEFLECTION	0.000	-0.070	-0.140	-0.210	-0.266	-0.295	-0.321	-0.377	-0.413	-0.449	-0.485	-0.497	-0.510	-0.523	-0.512	-0.501	-0.490	-0.460	-0.430	-0.399	-0.356	-0.314	-0.271	-0.268	-0.227	-0.182	-0.138	-0.105	-0.071	-0.038	-0.025	-0.013	0.000
	VERTICAL CURVE ORDINATE	0.000	0.000	0.000	0.000	0.000	0.000	0.000	0.000	0.000	0.000	0.000	0.000	0.000	0.000	0.000	0.000	0.000	0.000	0.000	0.000	0.000	0.000	0.000	0.000	0.000	0.000	0.000	0.000	0.000	0.000	0.000	0.000	0.000
	REQUIRED CAMBER	0"	13/16"	11 11/16"	2 1/2"	3 3/16"	3 9/16"	3 7/8"	4 1/2"	4 15/16"	5 3/8"	5 13/16"	5 15/16"	6 1/8"	6 1/4"	6 1/8"	6"	5 7/8"	5 1/2"	5 1/8"	4 13/16"	4 1/4"	3 3/4"	3 1/4"	3 3/16"	2 3/4"	2 3/16"	1 11/16"	1 1/4"	7/8"	7/16"	5/16"	1/8"	0"
GIRDER 3	DEFLECTION DUE TO WT. OF STEEL	0.000	-0.016	-0.033	-0.049	-0.062	-0.069	-0.075	-0.088	-0.096	-0.104	-0.113	-0.115	-0.118	-0.121	-0.119	-0.116	-0.114	-0.106	-0.099	-0.092	-0.082	-0.072	-0.062	-0.061	-0.052	-0.042	-0.031	-0.024	-0.016	-0.008	-0.006	-0.003	0.000
	DEFLECTION DUE TO WT. OF SLAB ▲	0.000	-0.043	-0.086	-0.129	-0.163	-0.181	-0.197	-0.231	-0.253	-0.275	-0.296	-0.304	-0.312	-0.319	-0.312	-0.306	-0.299	-0.280	-0.262	-0.243	-0.217	-0.191	-0.165	-0.163	-0.138	-0.112	-0.085	-0.065	-0.045	-0.024	-0.016	-0.008	0.000
	DEFL. DUE TO WT. OF BARRIER RAIL	0.000	-0.009	-0.019	-0.028	-0.036	-0.040	-0.043	-0.051	-0.056	-0.061	-0.066	-0.068	-0.070	-0.071	-0.070	-0.069	-0.068	-0.064	-0.060	-0.056	-0.050	-0.044	-0.038	-0.038	-0.032	-0.025	-0.019	-0.014	-0.009	-0.005	-0.003	-0.002	0.000
	TOTAL DEAD LOAD DEFLECTION	0.000	-0.069	-0.137	-0.206	-0.260	-0.289	-0.315	-0.369	-0.404	-0.440	-0.475	-0.487	-0.499	-0.512	-0.501	-0.491	-0.480	-0.450	-0.421	-0.391	-0.349	-0.307	-0.265	-0.262	-0.222	-0.179	-0.135	-0.103	-0.070	-0.037	-0.025	-0.016	0.000
	VERTICAL CURVE ORDINATE	0.000	0.000	0.000	0.000	0.000	0.000	0.000	0.000	0.000	0.000	0.000	0.000	0.000	0.000	0.000	0.000	0.000	0.000	0.000	0.000	0.000	0.000	0.000	0.000	0.000	0.000	0.000	0.000	0.000	0.000	0.000	0.000	0.000
	REQUIRED CAMBER	0"	13/16"	1 5/8"	2 1/2"	3 1/8"	3 1/2"	3 3/4"	4 7/16"	4 7/8"	5 1/4"	5 11/16"	5 7/8"	6"	6 1/8"	6"	5 7/8"	5 3/4"	5 3/8"	5 1/16"	4 11/16"	4 3/16"	3 11/16"	3 3/16"	3 1/8"	2 11/16"	2 1/8"	1 5/8"	1 1/4"	13/16"	7/16"	5/16"	1/8"	0"
GIRDER 4	DEFLECTION DUE TO WT. OF STEEL	0.000	-0.016	-0.033	-0.049	-0.062	-0.069	-0.075	-0.088	-0.096	-0.104	-0.113	-0.115	-0.118	-0.121	-0.119	-0.116	-0.114	-0.106	-0.099	-0.092	-0.082	-0.072	-0.062	-0.061	-0.052	-0.042	-0.031	-0.024	-0.016	-0.008	-0.006	-0.003	0.000
	DEFLECTION DUE TO WT. OF SLAB ▲	0.000	-0.043	-0.086	-0.129	-0.163	-0.181	-0.197	-0.231	-0.253	-0.275	-0.296	-0.304	-0.312	-0.319	-0.312	-0.306	-0.299	-0.280	-0.262	-0.243	-0.217	-0.191	-0.165	-0.163	-0.138	-0.112	-0.085	-0.065	-0.045	-0.024	-0.016	-0.008	0.000
	DEFL. DUE TO WT. OF BARRIER RAIL	0.000	-0.009	-0.019	-0.028	-0.036	-0.040	-0.043	-0.051	-0.056	-0.061	-0.066	-0.068	-0.070	-0.071	-0.070	-0.069	-0.068	-0.064	-0.060	-0.056	-0.050	-0.044	-0.038	-0.038	-0.032	-0.025	-0.019	-0.014	-0.009	-0.005	-0.003	-0.002	0.000
	TOTAL DEAD LOAD DEFLECTION	0.000	-0.069	-0.137	-0.206	-0.260	-0.289	-0.315	-0.369	-0.404	-0.440	-0.475	-0.487	-0.499	-0.512	-0.501	-0.491	-0.480	-0.450	-0.421	-0.391	-0.349	-0.307	-0.265	-0.262	-0.222	-0.179	-0.135	-0.103	-0.070	-0.037	-0.025	-0.016	0.000
	VERTICAL CURVE ORDINATE	0.000	0.000	0.000	0.000	0.000	0.000	0.000	0.000	0.000	0.000	0.000	0.000	0.000	0.000	0.000	0.000	0.000	0.000	0.000	0.000	0.000	0.000	0.000	0.000	0.000	0.000	0.000	0.000	0.000	0.000	0.000	0.000	0.000
	REQUIRED CAMBER	0"	13/16"	1 5/8"	2 1/2"	3 1/8"	3 1/2"	3 3/4"	4 7/16"	4 7/8"	5 1/4"	5 11/16"	5 7/8"	6"	6 1/8"	6"	5 7/8"	5 3/4"	5 3/8"	5 1/16"	4 11/16"	4 3/16"	3 11/16"	3 3/16"	3 1/8"	2 11/16"	2 1/8"	1 5/8"	1 1/4"	13/16"	7/16"	5/16"	1/8"	0"
GIRDER 5	DEFLECTION DUE TO WT. OF STEEL	0.000	-0.016	-0.033	-0.049	-0.062	-0.069	-0.075	-0.088	-0.096	-0.104	-0.113	-0.115	-0.118	-0.121	-0.119	-0.116	-0.114	-0.106	-0.099	-0.092	-0.082	-0.072	-0.062	-0.061	-0.052	-0.042	-0.031	-0.024	-0.016	-0.008	-0.006	-0.003	0.000
	DEFLECTION DUE TO WT. OF SLAB ▲	0.000	-0.043	-0.086	-0.129	-0.163	-0.181	-0.197	-0.231	-0.253	-0.275	-0.296	-0.304	-0.312	-0.319	-0.312	-0.306	-0.299	-0.280	-0.262	-0.243	-0.217	-0.191	-0.165	-0.163	-0.138	-0.112	-0.085	-0.065	-0.045	-0.024	-0.016	-0.008	0.000
	DEFL. DUE TO WT. OF BARRIER RAIL	0.000	-0.011	-0.022	-0.032	-0.041	-0.046	-0.050	-0.058	-0.064	-0.070	-0.076	-0.078	-0.080	-0.082	-0.081	-0.079	-0.078	-0.073	-0.069	-0.064	-0.057	-0.051	-0.044	-0.043	-0.037	-0.029	-0.022	-0.016	-0.011	-0.005	-0.004	-0.002	0.000
	TOTAL DEAD LOAD DEFLECTION	0.000	-0.070	-0.140	-0.210	-0.266	-0.295	-0.321	-0.377	-0.413	-0.449	-0.485	-0.497	-0.510	-0.523	-0.512	-0.501	-0.490	-0.460	-0.430	-0.399	-0.356	-0.314	-0.271	-0.268	-0.227	-0.182	-0.138	-0.105	-0.071	-0.038	-0.025	-0.013	0.000
	VERTICAL CURVE ORDINATE	0.000	0.000	0.000	0.000	0.000	0.000	0.000	0.000	0.000	0.000	0.000	0.000	0.000	0.000	0.000	0.000	0.000	0.000	0.000	0.000	0.000	0.000	0.000	0.000	0.000	0.000	0.000	0.000	0.000	0.000	0.000	0.000	0.000
	REQUIRED CAMBER	0"	13/16"	11 11/16"	2 1/2"	3 3/16"	3 9/16"	3 7/8"	4 1/2"	4 15/16"	5 3/8"	5 13/16"	5 15/16"	6 1/8"	6 1/4"	6 1/8"	6"	5 7/8"	5 1/2"	5 1/8"	4 13/16"	4 1/4"	3 3/4"	3 1/4"	3 3/16"	2 3/4"	2 3/16"	1 11/16"	1 1/4"	7/8"	7/16"	5/16"	1/8"	0"
GIRDER 6	DEFLECTION DUE TO WT. OF STEEL	0.000	-0.016	-0.031	-0.047	-0.059	-0.066	-0.071	-0.084	-0.092	-0.100	-0.108	-0.110	-0.113	-0.116	-0.114	-0.111	-0.109	-0.102	-0.095	-0.088	-0.079	-0.069	-0.059	-0.059	-0.050	-0.040	-0.030	-0.023	-0.015	-0.008	-0.005	-0.003	0.000
	DEFLECTION DUE TO WT. OF SLAB ▲	0.000	-0.043	-0.086	-0.129	-0.163	-0.181	-0.197	-0.231	-0.253	-0.275	-0.296	-0.304	-0.312	-0.319	-0.312	-0.306	-0.299	-0.280	-0.262	-0.243	-0.217	-0.191	-0.165	-0.163	-0.138	-0.112	-0.085	-0.065	-0.045	-0.024	-0.016	-0.008	0.000
	DEFL. DUE TO WT. OF BARRIER RAIL	0.000	-0.013	-0.026	-0.038	-0.049	-0.054	-0.059	-0.069	-0.076	-0.083	-0.090	-0.092	-0.095	-0.097	-0.096	-0.094	-0.092	-0.087	-0.081	-0.076	-0.068	-0.060	-0.052	-0.051	-0.043	-0.035	-0.026	-0.019	-0.013	-0.006	-0.004	-0.002	0.000
	TOTAL DEAD LOAD DEFLECTION	0.000	-0.071	-0.143	-0.214	-0.271	-0.301	-0.327	-0.384	-0.421	-0.457	-0.494	-0.507	-0.520	-0.533	-0.522	-0.511	-0.500	-0.469	-0.438	-0.407	-0.363	-0.320	-0.276	-0.273	-0.231	-0.186	-0.141	-0.107	-0.073	-0.039	-0.026	-0.013	0.000
	VERTICAL CURVE ORDINATE	0.000	0.000	0.000	0.000	0.000	0.000	0.000	0.000	0.000	0.000	0.000	0.000	0.000	0.000	0.000	0.000	0.000	0.000	0.000	0.000	0.000	0.000	0.000	0.000	0.000	0.000	0.000	0.000	0.000	0.000	0.000	0.000	0.000
	REQUIRED CAMBER	0"	7/8"	1 11/16"	2 9/16"	3 1/4"	3 5/8"	3 15/16"	4 5/8"	5 1/16"	5 1/2"	5 15/16"	6 1/16"	6 1/4"	6 3/8"	6 1/4"	6 1/8"	6"	5 5/8"	5 1/4"	4 7/8"	4 3/8"	3 13/16"	3 5/16"	3 1/4"	2 3/4"	2 1/4"	1 11/16"	1 5/16"	7/8"	7/16"	5/16"	1/8"	0"

SCHEMATIC CAMBER ORDINATES - SPAN 21

▲ INCLUDES SLAB, BUILDUP AND STAY-IN-PLACE FORMS

NOTES:

1. VALUES ARE SHOWN IN FEET (DECIMAL FORMAT), EXCEPT "REQUIRED CAMBER" WHICH IS GIVEN IN INCHES.
2. FOR GIRDER DESIGNATIONS, SEE FRAMING PLAN AND GIRDER DETAILS SHEETS.
3. DEFLECTIONS IN THE DOWNWARD DIRECTION ARE NEGATIVE. A REQUIRED CAMBER IN THE UPWARD DIRECTION IS POSITIVE. SIGN CONVENTION FOR DEAD LOAD DEFLECTION.

4. SLOPE FOR THE ZERO CAMBER BASE LINE VARIES.

PROJECT NO. U-2524C

GUILFORD COUNTY

STATION: POT 407+73.35 -L-
= POT 29+32.06 -Y4-

SHEET 3 OF 8

NORTH CAROLINA PROFESSIONAL SEAL 28479 ENGINEER KEVIN G. BAILEY
5-30-13

STATE OF NORTH CAROLINA
DEPARTMENT OF TRANSPORTATION
RALEIGH

STEEL GIRDER CAMBERS
UNIT G
SPAN 21

-LEFT LANE-

REVISIONS						SHEET NO.
NO.	BY:	DATE:	NO.	BY:	DATE:	S-142
1			3			TOTAL SHEETS
2			4			836

STV / Ralph Whitehead Associates, Inc.
1000 West Morehead St., Ste. 200
Charlotte, NC 28208
NC License No. F-0991

DRAWN BY : MR DATE : 10-12
CHECKED BY : KP DATE : 10-12
DESIGN ENGINEER OF RECORD: K. BAILEY DATE : 5-13

5/30/2013 4:57:53 PM R:\ustation\Finals\Unit G - Camber Span 21.dgn

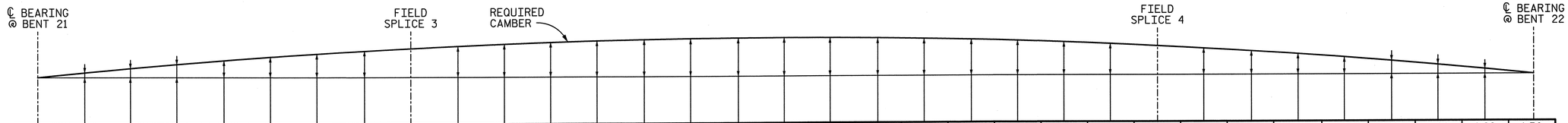

		1.00	1.01	1.02	1.03	1.04	1.05	1.06	1.07	F.S. 3	1.08	1.09	1.10	1.11	1.12	1.13	1.14	1.15	1.16	1.17	1.18	1.19	1.20	1.21	1.22	F.S. 4	1.23	1.24	1.25	1.26	1.27	1.28	1.29	1.30
GIRDER 1	DEFLECTION DUE TO WT. OF STEEL	0.000	-0.004	-0.008	-0.013	-0.023	-0.034	-0.045	-0.058	-0.066	-0.071	-0.084	-0.094	-0.103	-0.113	-0.117	-0.121	-0.124	-0.121	-0.117	-0.113	-0.103	-0.094	-0.084	-0.071	-0.066	-0.058	-0.045	-0.034	-0.023	-0.013	-0.008	-0.004	0.000
	DEFLECTION DUE TO WT. OF SLAB ▲	0.000	-0.009	-0.018	-0.027	-0.053	-0.080	-0.106	-0.138	-0.159	-0.171	-0.203	-0.228	-0.253	-0.279	-0.288	-0.298	-0.307	-0.298	-0.288	-0.279	-0.253	-0.228	-0.203	-0.171	-0.159	-0.138	-0.106	-0.080	-0.053	-0.027	-0.018	-0.009	0.000
	DEFL. DUE TO WT. OF BARRIER RAIL	0.000	-0.005	-0.009	-0.014	-0.025	-0.036	-0.047	-0.059	-0.066	-0.071	-0.083	-0.092	-0.101	-0.109	-0.113	-0.116	-0.119	-0.116	-0.113	-0.109	-0.101	-0.092	-0.083	-0.071	-0.066	-0.059	-0.047	-0.036	-0.025	-0.014	-0.009	-0.005	0.000
	TOTAL DEAD LOAD DEFLECTION	0.000	-0.018	-0.035	-0.053	-0.101	-0.150	-0.198	-0.255	-0.291	-0.312	-0.369	-0.413	-0.457	-0.501	-0.518	-0.534	-0.550	-0.534	-0.518	-0.501	-0.457	-0.413	-0.369	-0.312	-0.291	-0.255	-0.198	-0.150	-0.101	-0.053	-0.035	-0.018	0.000
	VERTICAL CURVE ORDINATE	0.000	0.000	0.000	0.000	0.000	0.000	0.000	0.000	0.000	0.000	0.000	0.000	0.000	0.000	0.000	0.000	0.000	0.000	0.000	0.000	0.000	0.000	0.000	0.000	0.000	0.000	0.000	0.000	0.000	0.000	0.000	0.000	0.000
	REQUIRED CAMBER	0"	3/16"	7/16"	5/8"	1 3/16"	1 13/16"	2 3/8"	3 1/16"	3 1/2"	3 3/4"	4 7/16"	4 15/16"	5 1/2"	6"	6 3/16"	6 7/16"	6 5/8"	6 7/16"	6 3/16"	6"	5 1/2"	4 15/16"	4 7/16"	3 3/4"	3 1/2"	3 1/16"	2 3/8"	1 13/16"	1 3/16"	5/8"	7/16"	3/16"	0"
GIRDER 2	DEFLECTION DUE TO WT. OF STEEL	0.000	-0.004	-0.009	-0.013	-0.024	-0.036	-0.047	-0.061	-0.069	-0.074	-0.087	-0.098	-0.108	-0.118	-0.122	-0.126	-0.130	-0.126	-0.122	-0.118	-0.108	-0.098	-0.087	-0.074	-0.069	-0.061	-0.047	-0.036	-0.024	-0.013	-0.009	-0.004	0.000
	DEFLECTION DUE TO WT. OF SLAB ▲	0.000	-0.009	-0.018	-0.027	-0.053	-0.080	-0.106	-0.138	-0.159	-0.171	-0.203	-0.228	-0.253	-0.279	-0.288	-0.298	-0.307	-0.298	-0.288	-0.279	-0.253	-0.228	-0.203	-0.171	-0.159	-0.138	-0.106	-0.080	-0.053	-0.027	-0.018	-0.009	0.000
	DEFL. DUE TO WT. OF BARRIER RAIL	0.000	-0.004	-0.008	-0.012	-0.022	-0.031	-0.041	-0.051	-0.058	-0.062	-0.072	-0.080	-0.087	-0.095	-0.097	-0.100	-0.103	-0.100	-0.097	-0.095	-0.087	-0.080	-0.072	-0.062	-0.058	-0.051	-0.041	-0.031	-0.022	-0.012	-0.008	-0.004	0.000
	TOTAL DEAD LOAD DEFLECTION	0.000	-0.017	-0.035	-0.052	-0.099	-0.147	-0.194	-0.250	-0.286	-0.306	-0.362	-0.405	-0.449	-0.492	-0.508	-0.524	-0.540	-0.524	-0.508	-0.492	-0.449	-0.405	-0.362	-0.306	-0.286	-0.250	-0.194	-0.147	-0.099	-0.052	-0.035	-0.017	0.000
	VERTICAL CURVE ORDINATE	0.000	0.000	0.000	0.000	0.000	0.000	0.000	0.000	0.000	0.000	0.000	0.000	0.000	0.000	0.000	0.000	0.000	0.000	0.000	0.000	0.000	0.000	0.000	0.000	0.000	0.000	0.000	0.000	0.000	0.000	0.000	0.000	0.000
	REQUIRED CAMBER	0"	3/16"	7/16"	5/8"	1 3/16"	1 3/4"	2 5/16"	3"	3 7/16"	3 11/16"	4 3/8"	4 7/8"	5 3/8"	5 7/8"	6 1/16"	6 5/16"	6 1/2"	6 5/16"	6 1/16"	5 7/8"	5 3/8"	4 7/8"	4 3/8"	3 11/16"	3 7/16"	3"	2 5/16"	1 3/4"	1 3/16"	5/8"	7/16"	3/16"	0"
GIRDER 3	DEFLECTION DUE TO WT. OF STEEL	0.000	-0.004	-0.009	-0.013	-0.024	-0.036	-0.047	-0.061	-0.069	-0.074	-0.087	-0.098	-0.108	-0.118	-0.122	-0.126	-0.130	-0.126	-0.122	-0.118	-0.108	-0.098	-0.087	-0.074	-0.069	-0.061	-0.047	-0.036	-0.024	-0.013	-0.009	-0.004	0.000
	DEFLECTION DUE TO WT. OF SLAB ▲	0.000	-0.009	-0.018	-0.027	-0.053	-0.080	-0.106	-0.138	-0.159	-0.171	-0.203	-0.228	-0.253	-0.279	-0.288	-0.298	-0.307	-0.298	-0.288	-0.279	-0.253	-0.228	-0.203	-0.171	-0.159	-0.138	-0.106	-0.080	-0.053	-0.027	-0.018	-0.009	0.000
	DEFL. DUE TO WT. OF BARRIER RAIL	0.000	-0.004	-0.007	-0.011	-0.019	-0.027	-0.036	-0.045	-0.050	-0.054	-0.063	-0.069	-0.076	-0.082	-0.085	-0.087	-0.090	-0.087	-0.085	-0.082	-0.076	-0.069	-0.063	-0.054	-0.050	-0.045	-0.036	-0.027	-0.019	-0.011	-0.007	-0.004	0.000
	TOTAL DEAD LOAD DEFLECTION	0.000	-0.017	-0.034	-0.050	-0.097	-0.143	-0.189	-0.244	-0.278	-0.298	-0.353	-0.395	-0.437	-0.480	-0.495	-0.511	-0.527	-0.511	-0.495	-0.480	-0.437	-0.395	-0.353	-0.298	-0.278	-0.244	-0.189	-0.143	-0.097	-0.050	-0.034	-0.017	0.000
	VERTICAL CURVE ORDINATE	0.000	0.000	0.000	0.000	0.000	0.000	0.000	0.000	0.000	0.000	0.000	0.000	0.000	0.000	0.000	0.000	0.000	0.000	0.000	0.000	0.000	0.000	0.000	0.000	0.000	0.000	0.000	0.000	0.000	0.000	0.000	0.000	0.000
	REQUIRED CAMBER	0"	3/16"	3/8"	5/8"	1 3/16"	1 11/16"	2 1/4"	2 15/16"	3 5/16"	3 9/16"	4 1/4"	4 3/4"	5 1/4"	5 3/4"	5 15/16"	6 1/8"	6 5/16"	6 1/8"	5 15/16"	5 3/4"	5 1/4"	4 3/4"	4 1/4"	3 9/16"	3 5/16"	2 15/16"	2 1/4"	1 11/16"	1 3/16"	5/8"	3/8"	3/16"	0"
GIRDER 4	DEFLECTION DUE TO WT. OF STEEL	0.000	-0.004	-0.009	-0.013	-0.024	-0.036	-0.047	-0.061	-0.069	-0.074	-0.087	-0.098	-0.108	-0.118	-0.122	-0.126	-0.130	-0.126	-0.122	-0.118	-0.108	-0.098	-0.087	-0.074	-0.069	-0.061	-0.047	-0.036	-0.024	-0.013	-0.009	-0.004	0.000
	DEFLECTION DUE TO WT. OF SLAB ▲	0.000	-0.009	-0.018	-0.027	-0.053	-0.080	-0.106	-0.138	-0.159	-0.171	-0.203	-0.228	-0.253	-0.279	-0.288	-0.298	-0.307	-0.298	-0.288	-0.279	-0.253	-0.228	-0.203	-0.171	-0.159	-0.138	-0.106	-0.080	-0.053	-0.027	-0.018	-0.009	0.000
	DEFL. DUE TO WT. OF BARRIER RAIL	0.000	-0.004	-0.007	-0.011	-0.019	-0.027	-0.036	-0.045	-0.050	-0.054	-0.063	-0.069	-0.076	-0.082	-0.085	-0.087	-0.090	-0.087	-0.085	-0.082	-0.076	-0.069	-0.063	-0.054	-0.050	-0.045	-0.036	-0.027	-0.019	-0.011	-0.007	-0.004	0.000
	TOTAL DEAD LOAD DEFLECTION	0.000	-0.017	-0.034	-0.050	-0.097	-0.143	-0.189	-0.244	-0.278	-0.298	-0.353	-0.395	-0.437	-0.480	-0.495	-0.511	-0.527	-0.511	-0.495	-0.480	-0.437	-0.395	-0.353	-0.298	-0.278	-0.244	-0.189	-0.143	-0.097	-0.050	-0.034	-0.017	0.000
	VERTICAL CURVE ORDINATE	0.000	0.000	0.000	0.000	0.000	0.000	0.000	0.000	0.000	0.000	0.000	0.000	0.000	0.000	0.000	0.000	0.000	0.000	0.000	0.000	0.000	0.000	0.000	0.000	0.000	0.000	0.000	0.000	0.000	0.000	0.000	0.000	0.000
	REQUIRED CAMBER	0"	3/16"	3/8"	5/8"	1 3/16"	1 11/16"	2 1/4"	2 15/16"	3 5/16"	3 9/16"	4 1/4"	4 3/4"	5 1/4"	5 3/4"	5 15/16"	6 1/8"	6 5/16"	6 1/8"	5 15/16"	5 3/4"	5 1/4"	4 3/4"	4 1/4"	3 9/16"	3 5/16"	2 15/16"	2 1/4"	1 11/16"	1 3/16"	5/8"	3/8"	3/16"	0"
GIRDER 5	DEFLECTION DUE TO WT. OF STEEL	0.000	-0.004	-0.009	-0.013	-0.024	-0.036	-0.047	-0.061	-0.069	-0.074	-0.087	-0.098	-0.108	-0.118	-0.122	-0.126	-0.130	-0.126	-0.122	-0.118	-0.108	-0.098	-0.087	-0.074	-0.069	-0.061	-0.047	-0.036	-0.024	-0.013	-0.009	-0.004	0.000
	DEFLECTION DUE TO WT. OF SLAB ▲	0.000	-0.009	-0.018	-0.027	-0.053	-0.080	-0.106	-0.138	-0.159	-0.171	-0.203	-0.228	-0.253	-0.279	-0.288	-0.298	-0.307	-0.298	-0.288	-0.279	-0.253	-0.228	-0.203	-0.171	-0.159	-0.138	-0.106	-0.080	-0.053	-0.027	-0.018	-0.009	0.000
	DEFL. DUE TO WT. OF BARRIER RAIL	0.000	-0.004	-0.008	-0.012	-0.022	-0.031	-0.041	-0.051	-0.058	-0.062	-0.072	-0.080	-0.087	-0.095	-0.097	-0.100	-0.103	-0.100	-0.097	-0.095	-0.087	-0.080	-0.072	-0.062	-0.058	-0.051	-0.041	-0.031	-0.022	-0.012	-0.008	-0.004	0.000
	TOTAL DEAD LOAD DEFLECTION	0.000	-0.017	-0.035	-0.052	-0.099	-0.147	-0.194	-0.250	-0.286	-0.306	-0.362	-0.405	-0.449	-0.492	-0.508	-0.524	-0.540	-0.524	-0.508	-0.492	-0.449	-0.405	-0.362	-0.306	-0.286	-0.250	-0.194	-0.147	-0.099	-0.052	-0.035	-0.017	0.000
	VERTICAL CURVE ORDINATE	0.000	0.000	0.000	0.000	0.000	0.000	0.000	0.000	0.000	0.000	0.000	0.000	0.000	0.000	0.000	0.000	0.000	0.000	0.000	0.000	0.000	0.000	0.000	0.000	0.000	0.000	0.000	0.000	0.000	0.000	0.000	0.000	0.000
	REQUIRED CAMBER	0"	3/16"	7/16"	5/8"	1 3/16"	1 3/4"	2 5/16"	3"	3 7/16"	3 11/16"	4 3/8"	4 7/8"	5 3/8"	5 7/8"	6 1/16"	6 5/16"	6 1/2"	6 5/16"	6 1/16"	5 7/8"	5 3/8"	4 7/8"	4 3/8"	3 11/16"	3 7/16"	3"	2 5/16"	1 3/4"	1 3/16"	5/8"	7/16"	3/16"	0"
GIRDER 6	DEFLECTION DUE TO WT. OF STEEL	0.000	-0.004	-0.008	-0.013	-0.023	-0.034	-0.045	-0.058	-0.066	-0.071	-0.084	-0.094	-0.103	-0.113	-0.117	-0.121	-0.124	-0.121	-0.117	-0.113	-0.103	-0.094	-0.084	-0.071	-0.066	-0.058	-0.045	-0.034	-0.023	-0.013	-0.008	-0.004	0.000
	DEFLECTION DUE TO WT. OF SLAB ▲	0.000	-0.009	-0.018	-0.027	-0.053	-0.080	-0.106	-0.138	-0.159	-0.171	-0.203	-0.228	-0.253	-0.279	-0.288	-0.298	-0.307	-0.298	-0.288	-0.279	-0.253	-0.228	-0.203	-0.171	-0.159	-0.138	-0.106	-0.080	-0.053	-0.027	-0.018	-0.009	0.000
	DEFL. DUE TO WT. OF BARRIER RAIL	0.000	-0.005	-0.009	-0.014	-0.025	-0.036	-0.047	-0.059	-0.066	-0.071	-0.083	-0.092	-0.101	-0.109	-0.113	-0.116	-0.119	-0.116	-0.113	-0.109	-0.101	-0.092	-0.083	-0.071	-0.066	-0.059	-0.047	-0.036	-0.025	-0.014	-0.009	-0.005	0.000
	TOTAL DEAD LOAD DEFLECTION	0.000	-0.018	-0.035	-0.053	-0.101	-0.150	-0.198	-0.255	-0.291	-0.312	-0.369	-0.413	-0.457	-0.501	-0.518	-0.534	-0.550	-0.534	-0.518	-0.501	-0.457	-0.413	-0.369	-0.312	-0.291	-0.255	-0.198	-0.150	-0.101	-0.053	-0.035	-0.018	0.000
	VERTICAL CURVE ORDINATE	0.000	0.000	0.000	0.000	0.000	0.000	0.000	0.000	0.000	0.000	0.000	0.000	0.000	0.000	0.000	0.000	0.000	0.000	0.000	0.000	0.000	0.000	0.000	0.000	0.000	0.000	0.000	0.000	0.000	0.000	0.000	0.000	0.000
	REQUIRED CAMBER	0"	3/16"	7/16"	5/8"	1 3/16"	1 13/16"	2 3/8"	3 1/16"	3 1/2"	3 3/4"	4 7/16"	4 15/16"	5 1/2"	6"	6 3/16"	6 7/16"	6 5/8"	6 7/16"	6 3/16"	6"	5 1/2"	4 15/16"	4 7/16"	3 3/4"	3 1/2"	3 1/16"	2 3/8"	1 13/16"	1 3/16"	5/8"	7/16"	3/16"	0"

SCHEMATIC CAMBER ORDINATES - SPAN 22

▲ INCLUDES SLAB, BUILDUP AND STAY-IN-PLACE FORMS

NOTES:

1. VALUES ARE SHOWN IN FEET (DECIMAL FORMAT), EXCEPT "REQUIRED CAMBER" WHICH IS GIVEN IN INCHES.
2. FOR GIRDER DESIGNATIONS, SEE FRAMING PLAN AND GIRDER DETAILS SHEETS.
3. DEFLECTIONS IN THE DOWNWARD DIRECTION ARE NEGATIVE. A REQUIRED CAMBER IN THE UPWARD DIRECTION IS POSITIVE. SIGN CONVENTION FOR DEAD LOAD DEFLECTION.

4. SLOPE FOR THE ZERO CAMBER BASE LINE VARIES.

PROJECT NO. U-2524C
GUILFORD COUNTY
STATION: POT 407+73.35 -L-
= POT 29+32.06 -Y4-

SHEET 4 OF 8

STATE OF NORTH CAROLINA
DEPARTMENT OF TRANSPORTATION
RALEIGH

STEEL GIRDER CAMBERS
UNIT G
SPAN 22

-LEFT LANE-

NORTH CAROLINA PROFESSIONAL SEAL 28479 ENGINEER KEVIN G. BAILEY 5-30-13

STV / Ralph Whitehead Associates, Inc.
1000 West Morehead St., Ste. 200
Charlotte, NC 28208
NC License No. F-0991

REVISIONS						SHEET NO.
NO.	BY:	DATE:	NO.	BY:	DATE:	S-143
1			3			TOTAL SHEETS
2			4			336

DRAWN BY : MR DATE : 10-12
CHECKED BY : KP DATE : 10-12
DESIGN ENGINEER OF RECORD: K. BAILEY DATE : 5-13

5/30/2013 4:57:58 PM R:\ustation\Finals\Unit G - Camber Span 22.dgn

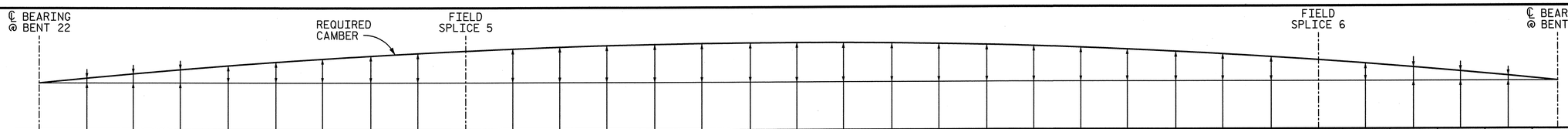

		1.00	1.01	1.02	1.03	1.04	1.05	1.06	1.07	1.08	F.S. 5	1.09	1.10	1.11	1.12	1.13	1.14	1.15	1.16	1.17	1.18	1.19	1.20	1.21	1.22	1.23	1.24	1.25	F.S. 6	1.26	1.27	1.28	1.29	1.30
GIRDER 1	DEFLECTION DUE TO WT. OF STEEL	0.000	-0.003	-0.005	-0.008	-0.015	-0.023	-0.030	-0.040	-0.050	-0.059	-0.059	-0.069	-0.079	-0.088	-0.095	-0.102	-0.109	-0.111	-0.114	-0.116	-0.113	-0.110	-0.108	-0.100	-0.092	-0.084	-0.071	-0.066	-0.059	-0.047	-0.031	-0.016	0.000
	DEFLECTION DUE TO WT. OF SLAB ▲	0.000	-0.008	-0.016	-0.024	-0.045	-0.065	-0.085	-0.112	-0.138	-0.163	-0.165	-0.191	-0.217	-0.243	-0.262	-0.280	-0.299	-0.306	-0.312	-0.319	-0.312	-0.304	-0.296	-0.275	-0.253	-0.231	-0.197	-0.181	-0.163	-0.129	-0.086	-0.043	0.000
	DEFL. DUE TO WT. OF BARRIER RAIL	0.000	-0.002	-0.004	-0.006	-0.013	-0.019	-0.026	-0.035	-0.043	-0.051	-0.052	-0.060	-0.068	-0.076	-0.081	-0.087	-0.092	-0.094	-0.096	-0.097	-0.095	-0.092	-0.090	-0.083	-0.076	-0.069	-0.059	-0.054	-0.049	-0.038	-0.026	-0.013	0.000
	TOTAL DEAD LOAD DEFLECTION	0.000	-0.013	-0.026	-0.039	-0.073	-0.107	-0.141	-0.186	-0.231	-0.273	-0.276	-0.320	-0.363	-0.407	-0.438	-0.469	-0.500	-0.511	-0.522	-0.533	-0.520	-0.507	-0.494	-0.457	-0.421	-0.384	-0.327	-0.301	-0.271	-0.214	-0.143	-0.071	0.000
	VERTICAL CURVE ORDINATE	0.000	0.000	0.000	0.000	0.000	0.000	0.000	0.000	0.000	0.000	0.000	0.000	0.000	0.000	0.000	0.000	0.000	0.000	0.000	0.000	0.000	0.000	0.000	0.000	0.000	0.000	0.000	0.000	0.000	0.000	0.000	0.000	0.000
	SUPERELEVATION ORDINATE	0.000	-0.009	-0.018	-0.028	-0.037	-0.046	-0.055	-0.064	-0.073	-0.082	-0.083	-0.092	-0.101	-0.110	-0.119	-0.128	-0.138	-0.147	-0.156	-0.165	-0.174	-0.183	-0.193	-0.202	-0.211	-0.220	-0.229	-0.209	-0.186	-0.140	-0.093	-0.047	0.000
	REQUIRED CAMBER	0"	1/16"	1/16"	1/8"	7/16"	3/4"	1"	1 7/16"	1 7/8"	2 5/16"	2 5/16"	2 3/4"	3 1/8"	3 9/16"	3 13/16"	4 1/16"	4 5/16"	4 3/8"	4 3/8"	4 7/16"	4 1/8"	3 7/8"	3 5/8"	3 1/16"	2 1/2"	1 15/16"	1 5/8"	1 7/16"	1 1/4"	7/8"	9/16"	5/16"	0"
GIRDER 2	DEFLECTION DUE TO WT. OF STEEL	0.000	-0.003	-0.006	-0.008	-0.016	-0.024	-0.031	-0.042	-0.052	-0.061	-0.062	-0.072	-0.082	-0.092	-0.099	-0.106	-0.114	-0.116	-0.119	-0.121	-0.118	-0.115	-0.113	-0.104	-0.096	-0.088	-0.075	-0.069	-0.062	-0.049	-0.033	-0.016	0.000
	DEFLECTION DUE TO WT. OF SLAB ▲	0.000	-0.008	-0.016	-0.024	-0.045	-0.065	-0.085	-0.112	-0.138	-0.163	-0.165	-0.191	-0.217	-0.243	-0.262	-0.280	-0.299	-0.306	-0.312	-0.319	-0.312	-0.304	-0.296	-0.275	-0.253	-0.231	-0.197	-0.181	-0.163	-0.129	-0.086	-0.043	0.000
	DEFL. DUE TO WT. OF BARRIER RAIL	0.000	-0.002	-0.004	-0.005	-0.011	-0.016	-0.022	-0.029	-0.037	-0.043	-0.044	-0.051	-0.057	-0.064	-0.069	-0.073	-0.078	-0.079	-0.081	-0.082	-0.080	-0.078	-0.076	-0.070	-0.064	-0.058	-0.050	-0.046	-0.041	-0.032	-0.022	-0.011	0.000
	TOTAL DEAD LOAD DEFLECTION	0.000	-0.013	-0.025	-0.038	-0.071	-0.105	-0.138	-0.182	-0.227	-0.268	-0.271	-0.314	-0.356	-0.399	-0.430	-0.460	-0.490	-0.501	-0.512	-0.523	-0.510	-0.497	-0.485	-0.449	-0.413	-0.377	-0.321	-0.295	-0.266	-0.210	-0.140	-0.070	0.000
	VERTICAL CURVE ORDINATE	0.000	0.000	0.000	0.000	0.000	0.000	0.000	0.000	0.000	0.000	0.000	0.000	0.000	0.000	0.000	0.000	0.000	0.000	0.000	0.000	0.000	0.000	0.000	0.000	0.000	0.000	0.000	0.000	0.000	0.000	0.000	0.000	0.000
	SUPERELEVATION ORDINATE	0.000	-0.007	-0.014	-0.021	-0.028	-0.035	-0.042	-0.049	-0.056	-0.062	-0.062	-0.069	-0.076	-0.083	-0.090	-0.097	-0.104	-0.111	-0.118	-0.125	-0.132	-0.139	-0.146	-0.153	-0.160	-0.167	-0.174	-0.159	-0.141	-0.106	-0.070	-0.035	0.000
	REQUIRED CAMBER	0"	1/16"	1/8"	3/16"	1/2"	13/16"	1 1/8"	1 5/8"	2 1/16"	2 1/2"	2 1/2"	2 15/16"	3 3/8"	3 13/16"	4 1/16"	4 3/8"	4 5/8"	4 11/16"	4 3/8"	4 3/8"	4 9/16"	4 5/16"	4 1/16"	3 9/16"	3 1/16"	2 1/2"	2 1/8"	1 7/8"	1 11/16"	1 1/4"	13/16"	7/16"	0"
GIRDER 3	DEFLECTION DUE TO WT. OF STEEL	0.000	-0.003	-0.006	-0.008	-0.016	-0.024	-0.031	-0.042	-0.052	-0.061	-0.062	-0.072	-0.082	-0.092	-0.099	-0.106	-0.114	-0.116	-0.119	-0.121	-0.118	-0.115	-0.113	-0.104	-0.096	-0.088	-0.075	-0.069	-0.062	-0.049	-0.033	-0.016	0.000
	DEFLECTION DUE TO WT. OF SLAB ▲	0.000	-0.008	-0.016	-0.024	-0.045	-0.065	-0.085	-0.112	-0.138	-0.163	-0.165	-0.191	-0.217	-0.243	-0.262	-0.280	-0.299	-0.306	-0.312	-0.319	-0.312	-0.304	-0.296	-0.275	-0.253	-0.231	-0.197	-0.181	-0.163	-0.129	-0.086	-0.043	0.000
	DEFL. DUE TO WT. OF BARRIER RAIL	0.000	-0.002	-0.003	-0.005	-0.009	-0.014	-0.019	-0.025	-0.032	-0.038	-0.038	-0.044	-0.050	-0.056	-0.060	-0.064	-0.068	-0.069	-0.070	-0.071	-0.070	-0.068	-0.066	-0.061	-0.056	-0.051	-0.043	-0.040	-0.036	-0.028	-0.019	-0.009	0.000
	TOTAL DEAD LOAD DEFLECTION	0.000	-0.012	-0.025	-0.037	-0.070	-0.103	-0.135	-0.179	-0.222	-0.262	-0.265	-0.307	-0.349	-0.391	-0.421	-0.450	-0.480	-0.491	-0.501	-0.512	-0.499	-0.487	-0.475	-0.440	-0.404	-0.369	-0.315	-0.289	-0.260	-0.206	-0.137	-0.069	0.000
	VERTICAL CURVE ORDINATE	0.000	0.000	0.000	0.000	0.000	0.000	0.000	0.000	0.000	0.000	0.000	0.000	0.000	0.000	0.000	0.000	0.000	0.000	0.000	0.000	0.000	0.000	0.000	0.000	0.000	0.000	0.000	0.000	0.000	0.000	0.000	0.000	0.000
	SUPERELEVATION ORDINATE	0.000	-0.005	-0.009	-0.014	-0.019	-0.024	-0.028	-0.033	-0.038	-0.042	-0.042	-0.047	-0.052	-0.057	-0.061	-0.066	-0.071	-0.075	-0.080	-0.085	-0.090	-0.094	-0.099	-0.104	-0.108	-0.113	-0.118	-0.108	-0.096	-0.072	-0.048	-0.024	0.000
	REQUIRED CAMBER	0"	1/16"	3/16"	1/4"	5/8"	15/16"	1 5/16"	1 3/4"	2 3/16"	2 5/8"	2 11/16"	3 1/8"	3 9/16"	4"	4 5/16"	4 5/8"	4 15/16"	5"	5 1/16"	5 1/8"	4 15/16"	4 11/16"	4 1/2"	4"	3 9/16"	3 1/16"	2 9/16"	2 3/8"	2 1/8"	1 5/8"	1 1/16"	9/16"	0"
GIRDER 4	DEFLECTION DUE TO WT. OF STEEL	0.000	-0.003	-0.006	-0.008	-0.016	-0.024	-0.031	-0.042	-0.052	-0.061	-0.062	-0.072	-0.082	-0.092	-0.099	-0.106	-0.114	-0.116	-0.119	-0.121	-0.118	-0.115	-0.113	-0.104	-0.096	-0.088	-0.075	-0.069	-0.062	-0.049	-0.033	-0.016	0.000
	DEFLECTION DUE TO WT. OF SLAB ▲	0.000	-0.008	-0.016	-0.024	-0.045	-0.065	-0.085	-0.112	-0.138	-0.163	-0.165	-0.191	-0.217	-0.243	-0.262	-0.280	-0.299	-0.306	-0.312	-0.319	-0.312	-0.304	-0.296	-0.275	-0.253	-0.231	-0.197	-0.181	-0.163	-0.129	-0.086	-0.043	0.000
	DEFL. DUE TO WT. OF BARRIER RAIL	0.000	-0.002	-0.003	-0.005	-0.009	-0.014	-0.019	-0.025	-0.032	-0.038	-0.038	-0.044	-0.050	-0.056	-0.060	-0.064	-0.068	-0.069	-0.070	-0.071	-0.070	-0.068	-0.066	-0.061	-0.056	-0.051	-0.043	-0.040	-0.036	-0.028	-0.019	-0.009	0.000
	TOTAL DEAD LOAD DEFLECTION	0.000	-0.012	-0.025	-0.037	-0.070	-0.103	-0.135	-0.179	-0.222	-0.262	-0.265	-0.307	-0.349	-0.391	-0.421	-0.450	-0.480	-0.491	-0.501	-0.512	-0.499	-0.487	-0.475	-0.440	-0.404	-0.369	-0.315	-0.289	-0.260	-0.206	-0.137	-0.069	0.000
	VERTICAL CURVE ORDINATE	0.000	0.000	0.000	0.000	0.000	0.000	0.000	0.000	0.000	0.000	0.000	0.000	0.000	0.000	0.000	0.000	0.000	0.000	0.000	0.000	0.000	0.000	0.000	0.000	0.000	0.000	0.000	0.000	0.000	0.000	0.000	0.000	0.000
	SUPERELEVATION ORDINATE	0.000	-0.002	-0.005	-0.007	-0.010	-0.012	-0.015	-0.017	-0.020	-0.022	-0.022	-0.025	-0.027	-0.030	-0.032	-0.035	-0.037	-0.040	-0.042	-0.045	-0.047	-0.050	-0.052	-0.055	-0.057	-0.060	-0.062	-0.056	-0.050	-0.038	-0.025	-0.013	0.000
	REQUIRED CAMBER	0"	1/8"	1/4"	3/8"	3/4"	1 1/16"	1 7/16"	1 15/16"	2 7/16"	2 7/8"	2 15/16"	3 3/8"	3 7/8"	4 5/16"	4 11/16"	5"	5 5/16"	5 7/16"	5 1/2"	5 5/8"	5 7/16"	5 1/4"	5 1/16"	4 5/8"	4 3/16"	3 11/16"	3 1/8"	2 7/8"	2 9/16"	2"	1 5/16"	11/16"	0"
GIRDER 5	DEFLECTION DUE TO WT. OF STEEL	0.000	-0.003	-0.006	-0.008	-0.016	-0.024	-0.031	-0.042	-0.052	-0.061	-0.062	-0.072	-0.082	-0.092	-0.099	-0.106	-0.114	-0.116	-0.119	-0.121	-0.118	-0.115	-0.113	-0.104	-0.096	-0.088	-0.075	-0.069	-0.062	-0.049	-0.033	-0.016	0.000
	DEFLECTION DUE TO WT. OF SLAB ▲	0.000	-0.008	-0.016	-0.024	-0.045	-0.065	-0.085	-0.112	-0.138	-0.163	-0.165	-0.191	-0.217	-0.243	-0.262	-0.280	-0.299	-0.306	-0.312	-0.319	-0.312	-0.304	-0.296	-0.275	-0.253	-0.231	-0.197	-0.181	-0.163	-0.129	-0.086	-0.043	0.000
	DEFL. DUE TO WT. OF BARRIER RAIL	0.000	-0.002	-0.004	-0.005	-0.011	-0.016	-0.022	-0.029	-0.037	-0.043	-0.044	-0.051	-0.057	-0.064	-0.069	-0.073	-0.078	-0.079	-0.081	-0.082	-0.080	-0.078	-0.076	-0.070	-0.064	-0.058	-0.050	-0.046	-0.041	-0.032	-0.022	-0.011	0.000
	TOTAL DEAD LOAD DEFLECTION	0.000	-0.013	-0.025	-0.038	-0.071	-0.105	-0.138	-0.182	-0.227	-0.268	-0.271	-0.314	-0.356	-0.399	-0.430	-0.460	-0.490	-0.501	-0.512	-0.523	-0.510	-0.497	-0.485	-0.449	-0.413	-0.377	-0.321	-0.295	-0.266	-0.210	-0.140	-0.070	0.000
	VERTICAL CURVE ORDINATE	0.000	0.000	0.000	0.000	0.000	0.000	0.000	0.000	0.000	0.000	0.000	0.000	0.000	0.000	0.000	0.000	0.000	0.000	0.000	0.000	0.000	0.000	0.000	0.000	0.000	0.000	0.000	0.000	0.000	0.000	0.000	0.000	0.000
	SUPERELEVATION ORDINATE	0.000	0.000	0.000	-0.001	-0.001	-0.001	-0.001	-0.002	-0.002	-0.002	-0.002	-0.002	-0.003	-0.003	-0.003	-0.003	-0.004	-0.004	-0.004	-0.004	-0.005	-0.005	-0.005	-0.005	-0.006	-0.006	-0.006	-0.006	-0.005	-0.004	-0.003	-0.001	0.000
	REQUIRED CAMBER	0"	1/8"	5/16"	7/16"	7/8"	1 1/4"	1 5/8"	2 3/16"	2 11/16"	3 3/16"	3 1/4"	3 3/4"	4 1/4"	4 3/4"	5 1/8"	5 1/2"	5 13/16"	5 15/16"	6 1/16"	6 1/4"	6 1/16"	5 15/16"	5 3/4"	5 5/16"	4 7/8"	4 7/16"	3 13/16"	3 1/2"	3 1/8"	2 1/2"	1 5/8"	13/16"	0"
GIRDER 6	DEFLECTION DUE TO WT. OF STEEL	0.000	-0.003	-0.005	-0.008	-0.015	-0.023	-0.030	-0.040	-0.050	-0.059	-0.059	-0.069	-0.079	-0.088	-0.095	-0.102	-0.109	-0.111	-0.114	-0.116	-0.113	-0.110	-0.108	-0.100	-0.092	-0.084	-0.071	-0.066	-0.059	-0.047	-0.031	-0.016	0.000
	DEFLECTION DUE TO WT. OF SLAB ▲	0.000	-0.008	-0.016	-0.024	-0.045	-0.065	-0.085	-0.112	-0.138	-0.163	-0.165	-0.191	-0.217	-0.243	-0.262	-0.280	-0.299	-0.306	-0.312	-0.319	-0.312	-0.304	-0.296	-0.275	-0.253	-0.231	-0.197	-0.181	-0.163	-0.129	-0.086	-0.043	0.000
	DEFL. DUE TO WT. OF BARRIER RAIL	0.000	-0.002	-0.004	-0.006	-0.013	-0.019	-0.026	-0.035	-0.043	-0.051	-0.052	-0.060	-0.068	-0.076	-0.081	-0.087	-0.092	-0.094	-0.096	-0.097	-0.095	-0.092	-0.090	-0.083	-0.076	-0.069	-0.059	-0.054	-0.049	-0.038	-0.026	-0.013	0.000
	TOTAL DEAD LOAD DEFLECTION	0.000	-0.013	-0.026	-0.039	-0.073	-0.107	-0.141	-0.186	-0.231	-0.273	-0.276	-0.320	-0.363	-0.407	-0.438	-0.469	-0.500	-0.511	-0.522	-0.533	-0.520	-0.507	-0.494	-0.457	-0.421	-0.384	-0.327	-0.301	-0.271	-0.214	-0.143	-0.071	0.000
	VERTICAL CURVE ORDINATE	0.000	0.000	0.000	0.000	0.000	0.000	0.000	0.000	0.000	0.000	0.000	0.000	0.000	0.000	0.000	0.000	0.000	0.000	0.000	0.000	0.000	0.000	0.000	0.000	0.000	0.000	0.000	0.000	0.000	0.000	0.000	0.000	0.000
	SUPERELEVATION ORDINATE	0.000	0.002	0.004	0.006	0.008	0.010	0.012	0.014	0.016	0.018	0.018	0.020	0.022	0.024	0.026	0.028	0.030	0.032	0.034	0.036	0.038	0.040	0.042	0.044	0.046	0.048	0.050	0.045	0.040	0.030	0.020	0.010	0.000
	REQUIRED CAMBER	0"	3/16"	3/8"	9/16"	1"	1 3/8"	1 13/16"	2 3/8"	2 15/16"	3 1/2"	3 1/2"	4 1/16"	4 5/8"	5 3/16"	5 9/16"	5 15/16"	6 3/8"	6 1/2"	6 11/16"	6 13/16"	6 11/16"	6 9/16"	6 7/16"	6"	5 5/8"	5 3/16"	4 7/16"	4 1/16"	3 11/16"	2 15/16"	1 15/16"	1"	0"

SCHEMATIC CAMBER ORDINATES - SPAN 23

▲ INCLUDES SLAB, BUILDUP AND STAY-IN-PLACE FORMS

NOTES:

1. VALUES ARE SHOWN IN FEET (DECIMAL FORMAT), EXCEPT "REQUIRED CAMBER" WHICH IS GIVEN IN INCHES.
2. FOR GIRDER DESIGNATIONS, SEE FRAMING PLAN AND GIRDER DETAILS SHEETS.
3. DEFLECTIONS IN THE DOWNWARD DIRECTION ARE NEGATIVE. A REQUIRED CAMBER IN THE UPWARD DIRECTION IS POSITIVE. SIGN CONVENTION FOR DEAD LOAD DEFLECTION.

(+)
0
(−)

4. SLOPE FOR THE ZERO CAMBER BASE LINE VARIES.

PROJECT NO. U-2524C
GUILFORD COUNTY
STATION: POT 407+73.35 -L-
= POT 29+32.06 -Y4-

SHEET 5 OF 8

NORTH CAROLINA PROFESSIONAL SEAL 28479 ENGINEER KEVIN G. BAILEY
5-30-13

STATE OF NORTH CAROLINA
DEPARTMENT OF TRANSPORTATION
RALEIGH

STEEL GIRDER CAMBERS
UNIT G
SPAN 23

-LEFT LANE-

STV / Ralph Whitehead Associates, Inc.
1000 West Morehead St., Ste. 200
Charlotte, NC 28208
NC License No. F-0991

REVISIONS								SHEET NO.
NO.	BY:	DATE:	NO.	BY:	DATE:			S-144
1			3					TOTAL SHEETS
2			4					836

DRAWN BY : MR DATE : 10-12
CHECKED BY : KP DATE : 10-12
DESIGN ENGINEER OF RECORD: K. BAILEY DATE : 5-13

5/30/2013 4:58:02 PM R:\Ustation\Finals\Unit G - Camber Span 23.dgn

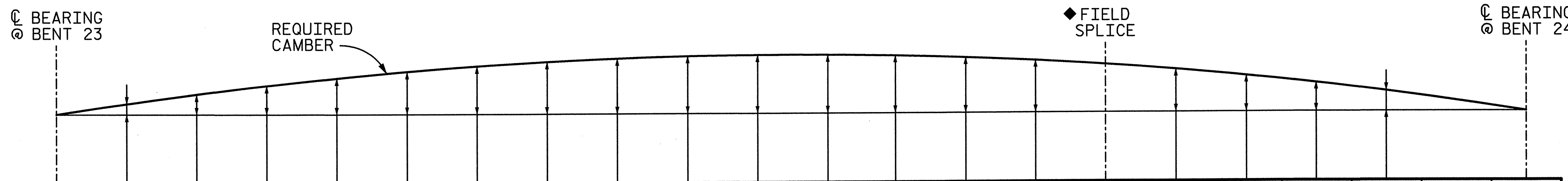

GIRDER 1	1.00	1.01	1.02	1.03	1.04	1.05	1.06	1.07	1.08	1.09	1.10	1.11	1.12	1.13	1.14	F.S.	1.15	1.16	1.17	1.18	1.19	1.20
DEFLECTION DUE TO WT. OF STEEL	0.000	-0.025	-0.050	-0.073	-0.093	-0.110	-0.125	-0.136	-0.144	-0.149	-0.150	-0.149	-0.144	-0.136	-0.125	-0.121	-0.110	-0.093	-0.073	-0.050	-0.025	0.000
DEFLECTION DUE TO WT. OF SLAB ▲	0.000	-0.061	-0.141	-0.216	-0.288	-0.341	-0.388	-0.424	-0.451	-0.467	-0.473	-0.467	-0.451	-0.424	-0.388	-0.376	-0.341	-0.283	-0.216	-0.141	-0.061	0.000
DEFL. DUE TO WT. OF BARRIER RAIL	0.000	-0.022	-0.043	-0.062	-0.080	-0.095	-0.108	-0.117	-0.124	-0.129	-0.130	-0.129	-0.124	-0.117	-0.108	-0.104	-0.095	-0.080	-0.062	-0.043	-0.022	0.000
TOTAL DEAD LOAD DEFLECTION	0.000	-0.108	-0.233	-0.351	-0.456	-0.546	-0.620	-0.677	-0.719	-0.745	-0.753	-0.745	-0.719	-0.677	-0.620	-0.601	-0.546	-0.456	-0.351	-0.233	-0.108	0.000
VERTICAL CURVE ORDINATE	0.000	0.000	0.000	0.000	0.000	0.000	0.000	0.000	0.000	0.000	0.000	0.000	0.000	0.000	0.000	0.000	0.000	0.000	0.000	0.000	0.000	0.000
SUPERELEVATION ORDINATE	0.000	-0.001	-0.001	-0.001	0.000	-0.001	-0.001	-0.001	-0.001	-0.002	-0.001	-0.001	-0.001	-0.001	-0.002	-0.002	-0.002	-0.002	-0.001	-0.001	-0.001	0.000
REQUIRED CAMBER	0"	1 1/4"	2 13/16"	4 3/16"	5 1/2"	6 9/16"	7 7/16"	8 1/8"	8 5/8"	8 15/16"	9"	8 15/16"	8 5/8"	8 1/8"	7 7/16"	7 3/16"	6 1/2"	5 7/16"	4 3/16"	2 13/16"	1 1/4"	0"

GIRDER 2	1.00	1.01	1.02	1.03	1.04	1.05	1.06	1.07	1.08	1.09	1.10	1.11	1.12	1.13	1.14	1.15	F.S.	1.16	1.17	1.18	1.19	1.20
DEFLECTION DUE TO WT. OF STEEL	0.000	-0.022	-0.043	-0.063	-0.080	-0.095	-0.108	-0.117	-0.123	-0.127	-0.128	-0.127	-0.123	-0.117	-0.108	-0.095	-0.095	-0.080	-0.063	-0.043	-0.022	0.000
DEFLECTION DUE TO WT. OF SLAB ▲	0.000	-0.078	-0.153	-0.223	-0.286	-0.340	-0.383	-0.416	-0.439	-0.453	-0.457	-0.453	-0.439	-0.416	-0.383	-0.340	-0.339	-0.286	-0.223	-0.153	-0.078	0.000
DEFL. DUE TO WT. OF BARRIER RAIL	0.000	-0.016	-0.031	-0.045	-0.058	-0.069	-0.078	-0.085	-0.090	-0.093	-0.093	-0.093	-0.090	-0.085	-0.078	-0.069	-0.068	-0.058	-0.045	-0.031	-0.016	0.000
TOTAL DEAD LOAD DEFLECTION	0.000	-0.115	-0.226	-0.330	-0.423	-0.503	-0.568	-0.617	-0.652	-0.673	-0.679	-0.673	-0.652	-0.617	-0.568	-0.503	-0.502	-0.423	-0.330	-0.226	-0.115	0.000
VERTICAL CURVE ORDINATE	0.000	0.000	0.000	0.000	0.000	0.000	0.000	0.000	0.000	0.000	0.000	0.000	0.000	0.000	0.000	0.000	0.000	0.000	0.000	0.000	0.000	0.000
SUPERELEVATION ORDINATE	0.000	0.000	0.000	0.000	-0.001	-0.001	-0.001	-0.001	-0.001	-0.001	-0.001	-0.001	-0.002	-0.002	-0.002	-0.001	-0.001	-0.001	-0.001	-0.001	-0.001	0.000
REQUIRED CAMBER	0"	1 3/8"	2 11/16"	3 15/16"	5 1/16"	6"	6 13/16"	7 3/8"	7 13/16"	8 1/16"	8 1/8"	8 1/16"	7 13/16"	7 3/8"	6 13/16"	6"	6"	5 1/16"	3 15/16"	2 11/16"	1 3/8"	0"

GIRDER 3	1.00	1.01	1.02	1.03	1.04	1.05	1.06	1.07	1.08	1.09	1.10	1.11	1.12	1.13	1.14	1.15	F.S.	1.16	1.17	1.18	1.19	1.20
DEFLECTION DUE TO WT. OF STEEL	0.000	-0.018	-0.035	-0.051	-0.065	-0.077	-0.087	-0.094	-0.100	-0.102	-0.103	-0.102	-0.100	-0.094	-0.087	-0.077	-0.066	-0.065	-0.051	-0.035	-0.018	0.000
DEFLECTION DUE TO WT. OF SLAB ▲	0.000	-0.063	-0.123	-0.179	-0.230	-0.274	-0.309	-0.335	-0.353	-0.363	-0.366	-0.363	-0.353	-0.335	-0.309	-0.274	-0.236	-0.230	-0.179	-0.123	-0.063	0.000
DEFL. DUE TO WT. OF BARRIER RAIL	0.000	-0.011	-0.022	-0.031	-0.040	-0.048	-0.054	-0.059	-0.063	-0.065	-0.065	-0.065	-0.063	-0.059	-0.054	-0.048	-0.041	-0.040	-0.031	-0.022	-0.011	0.000
TOTAL DEAD LOAD DEFLECTION	0.000	-0.091	-0.179	-0.261	-0.335	-0.399	-0.450	-0.488	-0.515	-0.530	-0.534	-0.530	-0.515	-0.488	-0.450	-0.399	-0.344	-0.335	-0.179	-0.179	-0.091	0.000
VERTICAL CURVE ORDINATE	0.000	0.000	0.000	0.000	0.000	0.000	0.000	0.000	0.000	0.000	0.000	0.000	0.000	0.000	0.000	0.000	0.000	0.000	0.000	0.000	0.000	0.000
SUPERELEVATION ORDINATE	0.000	0.000	-0.001	0.000	0.000	-0.001	0.000	-0.001	-0.001	0.000	-0.001	-0.001	0.000	-0.001	-0.001	-0.001	-0.001	-0.001	0.000	-0.001	0.000	0.000
REQUIRED CAMBER	0"	1 1/16"	2 1/8"	3 1/8"	4"	4 3/4"	5 3/8"	5 7/8"	6 3/16"	6 3/8"	6 3/8"	6 3/8"	6 3/16"	5 7/8"	5 3/8"	4 3/4"	4 1/8"	4"	3 1/8"	2 1/8"	1 1/16"	0"

GIRDER 4	1.00	1.01	1.02	1.03	1.04	1.05	1.06	1.07	1.08	1.09	1.10	1.11	1.12	1.13	F.S.	1.14	1.15	1.16	1.17	1.18	1.19	1.20
DEFLECTION DUE TO WT. OF STEEL	0.000	-0.015	-0.030	-0.044	-0.057	-0.068	-0.077	-0.085	-0.091	-0.094	-0.095	-0.094	-0.091	-0.085	-0.083	-0.077	-0.068	-0.057	-0.044	-0.030	-0.015	0.000
DEFLECTION DUE TO WT. OF SLAB ▲	0.000	-0.059	-0.116	-0.170	-0.220	-0.264	-0.301	-0.331	-0.353	-0.366	-0.370	-0.366	-0.353	-0.331	-0.324	-0.301	-0.264	-0.220	-0.170	-0.116	-0.059	0.000
DEFL. DUE TO WT. OF BARRIER RAIL	0.000	-0.010	-0.020	-0.029	-0.037	-0.044	-0.051	-0.056	-0.059	-0.061	-0.062	-0.061	-0.059	-0.056	-0.054	-0.051	-0.044	-0.037	-0.029	-0.020	-0.010	0.000
TOTAL DEAD LOAD DEFLECTION	0.000	-0.084	-0.166	-0.243	-0.314	-0.376	-0.429	-0.472	-0.503	-0.521	-0.528	-0.521	-0.503	-0.472	-0.462	-0.429	-0.376	-0.314	-0.243	-0.166	-0.084	0.000
VERTICAL CURVE ORDINATE	0.000	0.000	0.000	0.000	0.000	0.000	0.000	0.000	0.000	0.000	0.000	0.000	0.000	0.000	0.000	0.000	0.000	0.000	0.000	0.000	0.000	0.000
SUPERELEVATION ORDINATE	0.000	-0.001	0.000	-0.001	-0.001	0.000	-0.001	-0.001	0.000	-0.001	-0.001	0.000	-0.001	-0.001	-0.001	0.000	-0.001	-0.001	0.000	-0.001	-0.001	0.000
REQUIRED CAMBER	0"	1"	2"	2 7/8"	3 3/4"	4 1/2"	5 1/8"	5 5/8"	6"	6 1/4"	6 5/16"	6 1/4"	6"	5 5/8"	5 9/16"	5 1/8"	4 1/2"	3 3/4"	2 15/16"	2"	1"	0"

GIRDER 5	1.00	1.01	1.02	1.03	1.04	1.05	1.06	1.07	1.08	1.09	1.10	1.11	1.12	1.13	F.S.	1.14	1.15	1.16	1.17	1.18	1.19	1.20
DEFLECTION DUE TO WT. OF STEEL	0.000	-0.012	-0.023	-0.034	-0.044	-0.053	-0.061	-0.067	-0.071	-0.074	-0.074	-0.074	-0.071	-0.067	-0.061	-0.060	-0.053	-0.044	-0.034	-0.023	-0.012	0.000
DEFLECTION DUE TO WT. OF SLAB ▲	0.000	-0.046	-0.091	-0.133	-0.172	-0.206	-0.235	-0.259	-0.276	-0.286	-0.289	-0.286	-0.276	-0.259	-0.235	-0.233	-0.206	-0.172	-0.133	-0.091	-0.046	0.000
DEFL. DUE TO WT. OF BARRIER RAIL	0.000	-0.009	-0.018	-0.026	-0.033	-0.040	-0.045	-0.050	-0.053	-0.055	-0.056	-0.055	-0.053	-0.050	-0.045	-0.045	-0.040	-0.033	-0.026	-0.018	-0.009	0.000
TOTAL DEAD LOAD DEFLECTION	0.000	-0.067	-0.132	-0.193	-0.249	-0.299	-0.341	-0.375	-0.400	-0.415	-0.420	-0.415	-0.400	-0.375	-0.341	-0.338	-0.299	-0.249	-0.193	-0.132	-0.067	0.000
VERTICAL CURVE ORDINATE	0.000	0.000	0.000	0.000	0.000	0.000	0.000	0.000	0.000	0.000	0.000	0.000	0.000	0.000	0.000	0.000	0.000	0.000	0.000	0.000	0.000	0.000
SUPERELEVATION ORDINATE	0.000	0.000	-0.001	-0.001	-0.001	-0.001	0.000	0.000	0.000	0.000	0.000	0.000	0.000	0.000	0.000	0.000	0.000	0.000	-0.001	0.000	0.000	0.000
REQUIRED CAMBER	0"	13/16"	1 9/16"	2 5/16"	3"	3 9/16"	4 1/16"	4 1/2"	4 13/16"	5"	5 1/16"	5"	4 13/16"	4 1/2"	4 1/8"	4 1/16"	3 9/16"	3"	2 5/16"	1 9/16"	13/16"	0"

GIRDER 6	1.00	1.01	1.02	1.03	1.04	1.05	1.06	1.07	1.08	1.09	1.10	1.11	1.12	1.13	1.14	1.15	F.S.	1.16	1.17	1.18	1.19	1.20
DEFLECTION DUE TO WT. OF STEEL	0.000	-0.009	-0.017	-0.025	-0.033	-0.039	-0.045	-0.049	-0.052	-0.054	-0.055	-0.054	-0.052	-0.049	-0.045	-0.039	-0.039	-0.033	-0.025	-0.017	-0.009	0.000
DEFLECTION DUE TO WT. OF SLAB ▲	0.000	-0.009	-0.040	-0.068	-0.095	-0.118	-0.138	-0.154	-0.166	-0.173	-0.175	-0.173	-0.166	-0.154	-0.138	-0.118	-0.118	-0.095	-0.068	-0.040	-0.009	0.000
DEFL. DUE TO WT. OF BARRIER RAIL	0.000	-0.008	-0.016	-0.024	-0.031	-0.037	-0.042	-0.046	-0.049	-0.051	-0.052	-0.051	-0.049	-0.046	-0.042	-0.037	-0.037	-0.031	-0.024	-0.016	-0.008	0.000
TOTAL DEAD LOAD DEFLECTION	0.000	-0.026	-0.073	-0.117	-0.158	-0.194	-0.224	-0.249	-0.267	-0.278	-0.281	-0.278	-0.267	-0.249	-0.224	-0.194	-0.193	-0.158	-0.117	-0.073	-0.026	0.000
VERTICAL CURVE ORDINATE	0.000	0.000	0.000	0.000	0.000	0.000	0.000	0.000	0.000	0.000	0.000	0.000	0.000	0.000	0.000	0.000	0.000	0.000	0.000	0.000	0.000	0.000
SUPERELEVATION ORDINATE	0.000	0.000	0.000	-0.001	-0.001	0.000	0.000	0.000	-0.001	0.000	0.000	0.000	0.000	0.000	0.000	0.000	0.000	0.000	0.000	0.000	0.000	0.000
REQUIRED CAMBER	0"	5/16"	7/8"	1 3/8"	1 7/8"	2 5/16"	2 11/16"	3"	3 3/16"	3 5/16"	3 3/8"	3 5/16"	3 3/16"	3"	2 11/16"	2 5/16"	2 5/16"	1 7/8"	1 3/8"	7/8"	5/16"	0"

SCHEMATIC CAMBER ORDINATES - SPAN 24

▲ INCLUDES SLAB, BUILDUP AND STAY-IN-PLACE FORMS

◆ FOR GIRDERS 1 & 5, FIELD SPLICE IS LOCATED BETWEEN POINTS 1.14 AND 1.15.

FOR GIRDERS 2, 3 & 6, FIELD SPLICE IS LOCATED BETWEEN POINTS 1.15 AND 1.16.

FOR GIRDER 4, FIELD SPLICE IS LOCATED BETWEEN POINTS 1.13 AND 1.14.

NOTES:

1. VALUES ARE SHOWN IN FEET (DECIMAL FORMAT), EXCEPT "REQUIRED CAMBER" WHICH IS GIVEN IN INCHES.
2. FOR GIRDER DESIGNATIONS, SEE FRAMING PLAN AND GIRDER DETAILS SHEETS.
3. DEFLECTIONS IN THE DOWNWARD DIRECTION ARE NEGATIVE. A REQUIRED CAMBER IN THE UPWARD DIRECTION IS POSITIVE. SIGN CONVENTION FOR DEAD LOAD DEFLECTION.

(+) 0 (-)

4. SLOPE FOR THE ZERO CAMBER BASE LINE VARIES.

PROJECT NO. U-2524C

GUILFORD COUNTY

STATION: POT 407+73.35 -L- = POT 29+32.06 -Y4-

SHEET 6 OF 8

STATE OF NORTH CAROLINA
DEPARTMENT OF TRANSPORTATION
RALEIGH

STEEL GIRDER CAMBERS
SPAN 24

-LEFT LANE-

NORTH CAROLINA PROFESSIONAL SEAL 28479 ENGINEER KEVIN G. BAILEY
5-30-13

STV / Ralph Whitehead Associates, Inc.
1000 West Morehead St., Ste. 200
Charlotte, NC 28208
NC License No. F-0991

REVISIONS					
NO.	BY:	DATE:	NO.	BY:	DATE:
1			3		
2			4		

SHEET NO. S-145
TOTAL SHEETS 836

DRAWN BY : MR DATE : 10-12
CHECKED BY : KP DATE : 10-12
DESIGN ENGINEER OF RECORD: K. BAILEY DATE : 5-13

5/30/2013 4:58:07 PM R:\ustation\Finals\Span 24 - Camber(Updated G1).dgn

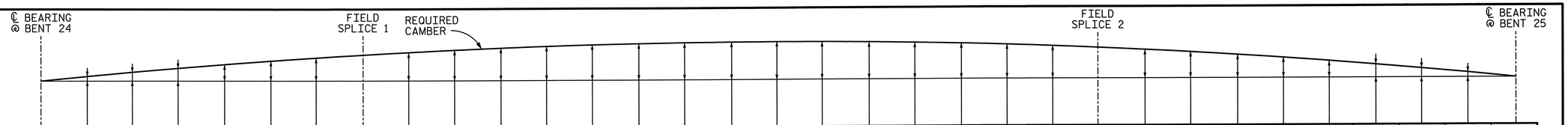

		1.00	1.01	1.02	1.03	1.04	1.05	1.06	F.S. 1	1.07	1.08	1.09	1.10	1.11	1.12	1.13	1.14	1.15	1.16	1.17	1.18	1.19	1.20	1.21	F.S. 2	1.22	1.23	1.24	1.25	1.26	1.27	1.28	1.29	1.30
GIRDER 1	DEFLECTION DUE TO WT. OF STEEL	0.000	-0.018	-0.035	-0.051	-0.066	-0.079	-0.091	-0.097	-0.101	-0.109	-0.115	-0.119	-0.121	-0.122	-0.120	-0.117	-0.113	-0.106	-0.099	-0.090	-0.081	-0.071	-0.060	-0.050	-0.049	-0.039	-0.029	-0.019	-0.011	-0.005	-0.001	0.000	0.000
	DEFLECTION DUE TO WT. OF SLAB ▲	0.000	-0.042	-0.081	-0.118	-0.151	-0.180	-0.206	-0.219	-0.227	-0.245	-0.258	-0.266	-0.271	-0.271	-0.268	-0.260	-0.249	-0.235	-0.218	-0.199	-0.177	-0.154	-0.130	-0.108	-0.106	-0.083	-0.061	-0.040	-0.023	-0.009	-0.001	-0.001	0.000
	DEFL. DUE TO WT. OF BARRIER RAIL	0.000	-0.006	-0.011	-0.016	-0.020	-0.024	-0.028	-0.030	-0.031	-0.034	-0.036	-0.037	-0.038	-0.038	-0.038	-0.037	-0.036	-0.034	-0.032	-0.029	-0.026	-0.023	-0.020	-0.017	-0.017	-0.013	-0.010	-0.007	-0.004	-0.002	-0.001	0.000	0.000
	TOTAL DEAD LOAD DEFLECTION	0.000	-0.065	-0.127	-0.185	-0.237	-0.284	-0.325	-0.345	-0.359	-0.387	-0.408	-0.422	-0.430	-0.431	-0.426	-0.415	-0.398	-0.376	-0.349	-0.318	-0.284	-0.248	-0.211	-0.175	-0.172	-0.135	-0.099	-0.067	-0.039	-0.017	-0.002	-0.001	0.000
	VERTICAL CURVE ORDINATE	0.000	0.000	0.000	0.000	0.000	0.000	0.000	0.000	0.000	0.000	0.000	0.000	0.000	0.000	0.000	0.000	0.000	0.000	0.000	0.000	0.000	0.000	0.000	0.000	0.000	0.000	0.000	0.000	0.000	0.000	0.000	0.000	0.000
	SUPERELEVATION ORDINATE	0.000	0.000	0.000	0.000	0.000	0.000	0.000	0.000	0.000	0.000	0.000	0.000	0.000	0.000	0.000	0.000	0.000	0.000	0.000	0.000	0.000	0.000	0.000	0.000	0.000	0.000	0.000	0.000	0.000	0.000	0.000	0.000	0.000
	REQUIRED CAMBER	0"	13/16"	1 1/2"	2 3/16"	2 7/8"	3 3/8"	3 7/8"	4 1/8"	4 5/16"	4 5/8"	4 7/8"	5 1/16"	5 3/16"	5 3/16"	5 1/8"	5"	4 3/4"	4 1/2"	4 3/16"	3 13/16"	3 7/16"	3"	2 1/2"	2 1/8"	2 1/16"	1 5/8"	1 3/16"	13/16"	7/16"	3/16"	0"	0"	0"
GIRDER 2	DEFLECTION DUE TO WT. OF STEEL	0.000	-0.018	-0.034	-0.050	-0.064	-0.077	-0.089	-0.095	-0.099	-0.107	-0.113	-0.118	-0.120	-0.121	-0.120	-0.118	-0.113	-0.108	-0.101	-0.092	-0.083	-0.073	-0.063	-0.053	-0.052	-0.042	-0.032	-0.022	-0.014	-0.007	-0.002	0.000	0.000
	DEFLECTION DUE TO WT. OF SLAB ▲	0.000	-0.041	-0.080	-0.116	-0.149	-0.178	-0.204	-0.218	-0.226	-0.244	-0.258	-0.267	-0.273	-0.274	-0.271	-0.265	-0.255	-0.241	-0.225	-0.206	-0.186	-0.163	-0.140	-0.117	-0.116	-0.092	-0.069	-0.048	-0.030	-0.015	-0.004	0.001	0.000
	DEFL. DUE TO WT. OF BARRIER RAIL	0.000	-0.005	-0.009	-0.014	-0.018	-0.021	-0.025	-0.026	-0.027	-0.030	-0.032	-0.033	-0.034	-0.035	-0.035	-0.034	-0.033	-0.032	-0.030	-0.028	-0.025	-0.022	-0.019	-0.017	-0.016	-0.013	-0.010	-0.008	-0.005	-0.003	-0.001	0.000	0.000
	TOTAL DEAD LOAD DEFLECTION	0.000	-0.063	-0.123	-0.179	-0.231	-0.277	-0.318	-0.339	-0.352	-0.381	-0.403	-0.418	-0.427	-0.430	-0.426	-0.417	-0.401	-0.381	-0.356	-0.327	-0.294	-0.259	-0.222	-0.186	-0.184	-0.147	-0.111	-0.078	-0.049	-0.025	-0.008	0.001	0.000
	VERTICAL CURVE ORDINATE	0.000	0.000	0.000	0.000	0.000	0.000	0.000	0.000	0.000	0.000	0.000	0.000	0.000	0.000	0.000	0.000	0.000	0.000	0.000	0.000	0.000	0.000	0.000	0.000	0.000	0.000	0.000	0.000	0.000	0.000	0.000	0.000	0.000
	SUPERELEVATION ORDINATE	0.000	0.000	0.000	0.000	0.000	0.000	0.000	0.000	0.000	0.000	0.000	0.000	0.000	0.000	0.000	0.000	0.000	0.000	0.000	0.000	0.000	0.000	0.000	0.000	0.000	0.000	0.000	0.000	0.000	0.000	0.000	0.000	0.000
	REQUIRED CAMBER	0"	3/4"	1 1/2"	2 1/8"	2 3/4"	3 5/16"	3 13/16"	4 1/16"	4 1/4"	4 9/16"	4 13/16"	5"	5 1/8"	5 3/16"	5 1/8"	5"	4 13/16"	4 9/16"	4 1/4"	3 15/16"	3 1/2"	3 1/8"	2 11/16"	2 1/4"	2 3/16"	1 3/4"	1 5/16"	15/16"	9/16"	5/16"	1/8"	0"	0"
GIRDER 3	DEFLECTION DUE TO WT. OF STEEL	0.000	-0.018	-0.034	-0.050	-0.065	-0.078	-0.089	-0.096	-0.099	-0.107	-0.114	-0.119	-0.121	-0.122	-0.122	-0.119	-0.115	-0.110	-0.103	-0.095	-0.086	-0.076	-0.066	-0.056	-0.055	-0.045	-0.034	-0.025	-0.016	-0.009	-0.004	0.000	0.000
	DEFLECTION DUE TO WT. OF SLAB ▲	0.000	-0.041	-0.080	-0.117	-0.150	-0.180	-0.206	-0.221	-0.229	-0.247	-0.262	-0.272	-0.278	-0.280	-0.277	-0.271	-0.262	-0.249	-0.233	-0.215	-0.194	-0.172	-0.148	-0.125	-0.124	-0.100	-0.077	-0.055	-0.036	-0.020	-0.008	-0.001	0.000
	DEFL. DUE TO WT. OF BARRIER RAIL	0.000	-0.004	-0.008	-0.012	-0.016	-0.019	-0.023	-0.024	-0.025	-0.027	-0.029	-0.031	-0.032	-0.032	-0.032	-0.032	-0.031	-0.030	-0.028	-0.026	-0.024	-0.021	-0.018	-0.016	-0.016	-0.013	-0.010	-0.007	-0.005	-0.003	-0.001	0.000	0.000
	TOTAL DEAD LOAD DEFLECTION	0.000	-0.063	-0.123	-0.179	-0.231	-0.277	-0.318	-0.341	-0.353	-0.382	-0.405	-0.421	-0.431	-0.434	-0.431	-0.423	-0.408	-0.388	-0.364	-0.336	-0.304	-0.269	-0.232	-0.196	-0.195	-0.157	-0.121	-0.087	-0.057	-0.032	-0.013	-0.002	0.000
	VERTICAL CURVE ORDINATE	0.000	0.000	0.000	0.000	0.000	0.000	0.000	0.000	0.000	0.000	0.000	0.000	0.000	0.000	0.000	0.000	0.000	0.000	0.000	0.000	0.000	0.000	0.000	0.000	0.000	0.000	0.000	0.000	0.000	0.000	0.000	0.000	0.000
	SUPERELEVATION ORDINATE	0.000	0.000	0.000	0.000	0.000	0.000	0.000	0.000	0.000	0.000	0.000	0.000	0.000	0.000	0.000	0.000	0.000	0.000	0.000	0.000	0.000	0.000	0.000	0.000	0.000	0.000	0.000	0.000	0.000	0.000	0.000	0.000	0.000
	REQUIRED CAMBER	0"	3/4"	1 1/2"	2 1/8"	2 3/4"	3 5/16"	3 13/16"	4 1/16"	4 1/4"	4 9/16"	4 7/8"	5 1/16"	5 3/16"	5 3/16"	5 3/16"	5 1/16"	4 7/8"	4 11/16"	4 3/8"	4"	3 5/8"	3 1/4"	2 13/16"	2 3/8"	2 5/16"	1 7/8"	1 7/16"	1 1/16"	11/16"	3/8"	1/8"	0"	0"
GIRDER 4	DEFLECTION DUE TO WT. OF STEEL	0.000	-0.018	-0.035	-0.051	-0.066	-0.080	-0.091	-0.098	-0.102	-0.110	-0.117	-0.122	-0.125	-0.126	-0.125	-0.123	-0.119	-0.113	-0.107	-0.099	-0.090	-0.080	-0.069	-0.059	-0.058	-0.048	-0.037	-0.027	-0.018	-0.011	-0.005	-0.001	0.000
	DEFLECTION DUE TO WT. OF SLAB ▲	0.000	-0.042	-0.082	-0.119	-0.153	-0.184	-0.211	-0.226	-0.234	-0.253	-0.268	-0.279	-0.285	-0.287	-0.286	-0.280	-0.271	-0.258	-0.242	-0.224	-0.203	-0.181	-0.157	-0.133	-0.132	-0.108	-0.084	-0.061	-0.041	-0.024	-0.011	-0.003	0.000
	DEFL. DUE TO WT. OF BARRIER RAIL	0.000	-0.004	-0.008	-0.012	-0.016	-0.019	-0.022	-0.023	-0.024	-0.026	-0.028	-0.029	-0.030	-0.031	-0.031	-0.030	-0.030	-0.028	-0.027	-0.025	-0.023	-0.020	-0.018	-0.015	-0.015	-0.013	-0.010	-0.007	-0.005	-0.003	-0.002	0.000	0.000
	TOTAL DEAD LOAD DEFLECTION	0.000	-0.064	-0.125	-0.183	-0.235	-0.282	-0.324	-0.348	-0.360	-0.390	-0.413	-0.430	-0.440	-0.444	-0.442	-0.433	-0.419	-0.400	-0.376	-0.347	-0.315	-0.281	-0.244	-0.207	-0.206	-0.168	-0.131	-0.096	-0.065	-0.038	-0.017	-0.004	0.000
	VERTICAL CURVE ORDINATE	0.000	0.000	0.000	0.000	0.000	0.000	0.000	0.000	0.000	0.000	0.000	0.000	0.000	0.000	0.000	0.000	0.000	0.000	0.000	0.000	0.000	0.000	0.000	0.000	0.000	0.000	0.000	0.000	0.000	0.000	0.000	0.000	0.000
	SUPERELEVATION ORDINATE	0.000	0.000	0.000	0.000	0.000	0.000	0.000	0.000	0.000	0.000	0.000	0.000	0.000	0.000	0.000	0.000	0.000	0.000	0.000	0.000	0.000	0.000	0.000	0.000	0.000	0.000	0.000	0.000	0.000	0.000	0.000	0.000	0.000
	REQUIRED CAMBER	0"	3/4"	1 1/2"	2 3/16"	2 13/16"	3 3/8"	3 7/8"	4 3/16"	4 5/16"	4 11/16"	4 15/16"	5 3/16"	5 1/4"	5 5/16"	5 5/16"	5 3/16"	5"	4 13/16"	4 1/2"	4 3/16"	3 13/16"	3 3/8"	2 15/16"	2 1/2"	2 1/2"	2"	1 9/16"	1 1/8"	3/4"	7/16"	3/16"	1/16"	0"
GIRDER 5	DEFLECTION DUE TO WT. OF STEEL	0.000	-0.019	-0.036	-0.053	-0.068	-0.082	-0.095	-0.102	-0.105	-0.114	-0.121	-0.126	-0.130	-0.131	-0.131	-0.128	-0.124	-0.119	-0.112	-0.104	-0.094	-0.084	-0.074	-0.063	-0.062	-0.051	-0.040	-0.030	-0.020	-0.012	-0.006	-0.002	0.000
	DEFLECTION DUE TO WT. OF SLAB ▲	0.000	-0.043	-0.084	-0.123	-0.158	-0.189	-0.217	-0.234	-0.241	-0.261	-0.277	-0.288	-0.295	-0.298	-0.296	-0.291	-0.282	-0.269	-0.253	-0.235	-0.213	-0.191	-0.166	-0.141	-0.141	-0.116	-0.091	-0.068	-0.046	-0.028	-0.013	-0.004	0.000
	DEFL. DUE TO WT. OF BARRIER RAIL	0.000	-0.004	-0.008	-0.012	-0.016	-0.019	-0.022	-0.024	-0.024	-0.027	-0.028	-0.030	-0.030	-0.031	-0.031	-0.030	-0.029	-0.028	-0.027	-0.025	-0.023	-0.020	-0.018	-0.015	-0.015	-0.013	-0.010	-0.008	-0.005	-0.003	-0.002	0.000	0.000
	TOTAL DEAD LOAD DEFLECTION	0.000	-0.066	-0.129	-0.188	-0.242	-0.291	-0.334	-0.360	-0.371	-0.402	-0.426	-0.444	-0.455	-0.460	-0.458	-0.450	-0.436	-0.416	-0.392	-0.363	-0.331	-0.295	-0.258	-0.219	-0.219	-0.180	-0.141	-0.105	-0.072	-0.043	-0.021	-0.006	0.000
	VERTICAL CURVE ORDINATE	0.000	0.000	0.000	0.000	0.000	0.000	0.000	0.000	0.000	0.000	0.000	0.000	0.000	0.000	0.000	0.000	0.000	0.000	0.000	0.000	0.000	0.000	0.000	0.000	0.000	0.000	0.000	0.000	0.000	0.000	0.000	0.000	0.000
	SUPERELEVATION ORDINATE	0.000	0.000	0.000	0.000	0.000	0.000	0.000	0.000	0.000	0.000	0.000	0.000	0.000	0.000	0.000	0.000	0.000	0.000	0.000	0.000	0.000	0.000	0.000	0.000	0.000	0.000	0.000	0.000	0.000	0.000	0.000	0.000	0.000
	REQUIRED CAMBER	0"	13/16"	1 9/16"	2 1/4"	2 7/8"	3 1/2"	4"	4 5/16"	4 7/16"	4 13/16"	5 1/8"	5 5/16"	5 7/16"	5 1/2"	5 1/2"	5 3/8"	5 1/4"	5"	4 11/16"	4 3/8"	3 15/16"	3 9/16"	3 1/16"	2 5/8"	2 5/8"	2 1/8"	1 11/16"	1 1/4"	7/8"	1/2"	1/4"	1/16"	0"
GIRDER 6	DEFLECTION DUE TO WT. OF STEEL	0.000	-0.019	-0.038	-0.055	-0.071	-0.086	-0.099	-0.106	-0.110	-0.120	-0.127	-0.133	-0.136	-0.138	-0.138	-0.136	-0.132	-0.126	-0.119	-0.111	-0.101	-0.091	-0.079	-0.068	-0.068	-0.056	-0.044	-0.033	-0.023	-0.014	-0.007	-0.002	0.000
	DEFLECTION DUE TO WT. OF SLAB ▲	0.000	-0.045	-0.087	-0.127	-0.163	-0.196	-0.225	-0.241	-0.251	-0.272	-0.288	-0.300	-0.308	-0.311	-0.310	-0.305	-0.296	-0.283	-0.267	-0.248	-0.226	-0.203	-0.177	-0.151	-0.151	-0.125	-0.099	-0.074	-0.052	-0.032	-0.016	-0.005	0.000
	DEFL. DUE TO WT. OF BARRIER RAIL	0.000	-0.004	-0.009	-0.013	-0.016	-0.020	-0.023	-0.024	-0.025	-0.027	-0.029	-0.030	-0.031	-0.032	-0.032	-0.031	-0.030	-0.029	-0.028	-0.026	-0.023	-0.021	-0.018	-0.016	-0.016	-0.013	-0.010	-0.008	-0.005	-0.003	-0.002	-0.001	0.000
	TOTAL DEAD LOAD DEFLECTION	0.000	-0.068	-0.134	-0.195	-0.251	-0.302	-0.347	-0.371	-0.386	-0.419	-0.445	-0.464	-0.476	-0.481	-0.480	-0.472	-0.458	-0.438	-0.414	-0.384	-0.351	-0.314	-0.275	-0.235	-0.235	-0.194	-0.153	-0.115	-0.080	-0.050	-0.025	-0.008	0.000
	VERTICAL CURVE ORDINATE	0.000	0.000	0.000	0.000	0.000	0.000	0.000	0.000	0.000	0.000	0.000	0.000	0.000	0.000	0.000	0.000	0.000	0.000	0.000	0.000	0.000	0.000	0.000	0.000	0.000	0.000	0.000	0.000	0.000	0.000	0.000	0.000	0.000
	SUPERELEVATION ORDINATE	0.000	0.000	0.000	0.000	0.000	0.000	0.000	0.000	0.000	0.000	0.000	0.000	0.000	0.000	0.000	0.000	0.000	0.000	0.000	0.000	0.000	0.000	0.000	0.000	0.000	0.000	0.000	0.000	0.000	0.000	0.000	0.000	0.000
	REQUIRED CAMBER	0"	13/16"	1 5/8"	2 5/16"	3"	3 5/8"	4 3/16"	4 7/16"	4 5/8"	5"	5 5/16"	5 9/16"	5 11/16"	5 3/4"	5 3/4"	5 11/16"	5 1/2"	5 1/4"	4 15/16"	4 5/8"	4 3/16"	3 3/4"	3 5/16"	2 13/16"	2 13/16"	2 5/16"	1 13/16"	1 3/8"	15/16"	5/8"	5/16"	1/8"	0"

SCHEMATIC CAMBER ORDINATES - SPAN 25

▲ INCLUDES SLAB, BUILDUP AND STAY-IN-PLACE FORMS

NOTES:

1. VALUES ARE SHOWN IN FEET (DECIMAL FORMAT), EXCEPT "REQUIRED CAMBER" WHICH IS GIVEN IN INCHES.
2. FOR GIRDER DESIGNATIONS, SEE FRAMING PLAN AND GIRDER DETAILS SHEETS.
3. DEFLECTIONS IN THE DOWNWARD DIRECTION ARE NEGATIVE. A REQUIRED CAMBER IN THE UPWARD DIRECTION IS POSITIVE. SIGN CONVENTION FOR DEAD LOAD DEFLECTION.

(+) 0 (-)

4. SLOPE FOR THE ZERO CAMBER BASE LINE VARIES.

PROJECT NO. U-2524C
GUILFORD COUNTY
STATION: POT 407+73.35 -L-
= POT 29+32.06 -Y4-

SHEET 7 OF 8

STATE OF NORTH CAROLINA
DEPARTMENT OF TRANSPORTATION
RALEIGH

STEEL GIRDER CAMBERS
UNIT H
SPAN 25

-LEFT LANE-

NORTH CAROLINA PROFESSIONAL SEAL 28479 ENGINEER KEVIN G. BAILEY 5-30-13

STV / Ralph Whitehead Associates, Inc.
1000 West Morehead St., Ste. 200
Charlotte, NC 28208
NC License No. F-0991

REVISIONS								
NO.	BY:	DATE:	NO.	BY:	DATE:		SHEET NO.	S-146
1			3				TOTAL SHEETS	836
2			4					

DRAWN BY : TRL DATE : 2-13
CHECKED BY : MFR DATE : 2-13
DESIGN ENGINEER OF RECORD: M. ROBBINS DATE : 5-13

5/30/2013 4:58:12 PM R:\ustation\Finals\Unit H - Camber Span 25.dgn

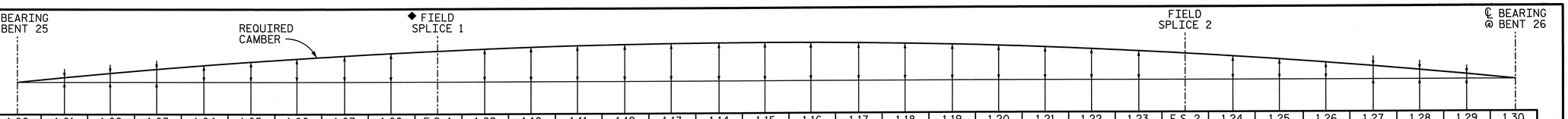

GIRDER 1	1.00	1.01	1.02	1.03	1.04	1.05	1.06	1.07	1.08	F.S. 1	1.09	1.10	1.11	1.12	1.13	1.14	1.15	1.16	1.17	1.18	1.19	1.20	1.21	1.22	1.23	F.S. 2	1.24	1.25	1.26	1.27	1.28	1.29	1.30
DEFLECTION DUE TO WT. OF STEEL	0.000	-0.003	-0.008	-0.016	-0.026	-0.037	-0.049	-0.061	-0.074	-0.075	-0.087	-0.099	-0.110	-0.120	-0.130	-0.137	-0.143	-0.147	-0.149	-0.150	-0.148	-0.144	-0.138	-0.130	-0.119	-0.114	-0.107	-0.093	-0.077	-0.060	-0.041	-0.021	0.000
DEFLECTION DUE TO WT. OF SLAB ▲	0.000	-0.006	-0.019	-0.036	-0.058	-0.083	-0.109	-0.138	-0.166	-0.168	-0.194	-0.222	-0.247	-0.271	-0.291	-0.308	-0.322	-0.332	-0.337	-0.338	-0.334	-0.326	-0.312	-0.294	-0.272	-0.260	-0.244	-0.213	-0.177	-0.137	-0.094	-0.048	0.000
DEFL. DUE TO WT. OF BARRIER RAIL	0.000	-0.001	-0.003	-0.005	-0.009	-0.012	-0.016	-0.020	-0.023	-0.024	-0.027	-0.031	-0.034	-0.037	-0.040	-0.042	-0.044	-0.045	-0.045	-0.045	-0.044	-0.043	-0.041	-0.038	-0.035	-0.034	-0.032	-0.027	-0.022	-0.017	-0.012	-0.006	0.000
TOTAL DEAD LOAD DEFLECTION	0.000	-0.010	-0.030	-0.058	-0.092	-0.131	-0.174	-0.219	-0.264	-0.266	-0.308	-0.351	-0.392	-0.428	-0.460	-0.487	-0.509	-0.524	-0.532	-0.533	-0.526	-0.513	-0.491	-0.462	-0.426	-0.408	-0.383	-0.333	-0.277	-0.214	-0.147	-0.075	0.000
VERTICAL CURVE ORDINATE	0.000	0.000	0.000	0.000	0.000	0.000	0.000	0.000	0.000	0.000	0.000	0.000	0.000	0.000	0.000	0.000	0.000	0.000	0.000	0.000	0.000	0.000	0.000	0.000	0.000	0.000	0.000	0.000	0.000	0.000	0.000	0.000	0.000
SUPERELEVATION ORDINATE	0.000	0.049	0.096	0.144	0.191	0.230	0.221	0.212	0.202	0.202	0.194	0.185	0.175	0.166	0.157	0.146	0.137	0.128	0.118	0.109	0.100	0.090	0.081	0.072	0.063	0.059	0.054	0.045	0.036	0.027	0.019	0.009	0.000
REQUIRED CAMBER	0"	11/16"	1 1/2"	2 7/16"	3 3/8"	4 5/16"	4 3/4"	5 3/16"	5 9/16"	5 5/8"	6"	6 7/16"	6 13/16"	7 1/8"	7 3/8"	7 5/8"	7 3/4"	7 13/16"	7 13/16"	7 11/16"	7 1/2"	7 1/4"	6 7/8"	6 7/16"	5 7/8"	5 5/8"	5 1/4"	4 9/16"	3 3/4"	2 7/8"	2"	1"	0"

GIRDER 2	1.00	1.01	1.02	1.03	1.04	1.05	1.06	1.07	1.08	F.S. 1	1.09	1.10	1.11	1.12	1.13	1.14	1.15	1.16	1.17	1.18	1.19	1.20	1.21	1.22	1.23	F.S. 2	1.24	1.25	1.26	1.27	1.28	1.29	1.30
DEFLECTION DUE TO WT. OF STEEL	0.000	-0.002	-0.007	-0.014	-0.022	-0.032	-0.044	-0.055	-0.067	-0.068	-0.079	-0.091	-0.101	-0.111	-0.120	-0.127	-0.133	-0.137	-0.140	-0.140	-0.139	-0.135	-0.130	-0.123	-0.113	-0.109	-0.102	-0.089	-0.074	-0.057	-0.039	-0.020	0.000
DEFLECTION DUE TO WT. OF SLAB ▲	0.000	-0.005	-0.016	-0.032	-0.051	-0.074	-0.099	-0.126	-0.153	-0.154	-0.180	-0.206	-0.230	-0.253	-0.273	-0.290	-0.303	-0.313	-0.319	-0.320	-0.317	-0.310	-0.298	-0.281	-0.260	-0.250	-0.234	-0.204	-0.170	-0.132	-0.091	-0.047	0.000
DEFL. DUE TO WT. OF BARRIER RAIL	0.000	-0.001	-0.002	-0.004	-0.007	-0.009	-0.013	-0.016	-0.019	-0.020	-0.023	-0.026	-0.029	-0.032	-0.034	-0.036	-0.038	-0.039	-0.040	-0.040	-0.039	-0.038	-0.037	-0.034	-0.032	-0.030	-0.028	-0.025	-0.021	-0.016	-0.011	-0.006	0.000
TOTAL DEAD LOAD DEFLECTION	0.000	-0.007	-0.024	-0.049	-0.080	-0.116	-0.156	-0.197	-0.240	-0.241	-0.282	-0.322	-0.361	-0.396	-0.427	-0.453	-0.474	-0.489	-0.498	-0.500	-0.495	-0.484	-0.464	-0.438	-0.405	-0.389	-0.364	-0.317	-0.264	-0.205	-0.141	-0.072	0.000
VERTICAL CURVE ORDINATE	0.000	0.000	0.000	0.000	0.000	0.000	0.000	0.000	0.000	0.000	0.000	0.000	0.000	0.000	0.000	0.000	0.000	0.000	0.000	0.000	0.000	0.000	0.000	0.000	0.000	0.000	0.000	0.000	0.000	0.000	0.000	0.000	0.000
SUPERELEVATION ORDINATE	0.000	0.035	0.070	0.106	0.141	0.175	0.208	0.199	0.190	0.191	0.182	0.173	0.164	0.156	0.147	0.138	0.129	0.121	0.111	0.103	0.094	0.084	0.076	0.068	0.059	0.056	0.051	0.042	0.034	0.025	0.017	0.008	0.000
REQUIRED CAMBER	0"	1/2"	1 1/8"	1 7/8"	2 5/8"	3 1/2"	4 3/8"	4 3/4"	5 3/16"	5 3/16"	5 9/16"	5 15/16"	6 5/16"	6 5/8"	6 7/8"	7 1/8"	7 1/4"	7 5/16"	7 5/16"	7 1/4"	7 1/16"	6 13/16"	6 1/2"	6 1/16"	5 9/16"	5 5/16"	5"	4 5/16"	3 9/16"	2 3/4"	1 7/8"	15/16"	0"

GIRDER 3	1.00	1.01	1.02	1.03	1.04	1.05	1.06	1.07	1.08	F.S. 1	1.09	1.10	1.11	1.12	1.13	1.14	1.15	1.16	1.17	1.18	1.19	1.20	1.21	1.22	1.23	F.S. 2	1.24	1.25	1.26	1.27	1.28	1.29	1.30
DEFLECTION DUE TO WT. OF STEEL	0.000	-0.001	-0.006	-0.012	-0.020	-0.030	-0.040	-0.051	-0.062	-0.062	-0.073	-0.084	-0.095	-0.104	-0.113	-0.120	-0.126	-0.130	-0.133	-0.134	-0.133	-0.130	-0.125	-0.118	-0.109	-0.106	-0.099	-0.086	-0.072	-0.056	-0.039	-0.020	0.000
DEFLECTION DUE TO WT. OF SLAB ▲	0.000	-0.004	-0.013	-0.028	-0.046	-0.067	-0.091	-0.116	-0.141	-0.142	-0.167	-0.192	-0.215	-0.237	-0.257	-0.273	-0.287	-0.297	-0.304	-0.306	-0.304	-0.298	-0.288	-0.272	-0.253	-0.245	-0.229	-0.200	-0.167	-0.131	-0.090	-0.046	0.000
DEFL. DUE TO WT. OF BARRIER RAIL	0.000	0.000	-0.002	-0.003	-0.005	-0.008	-0.011	-0.014	-0.017	-0.017	-0.020	-0.022	-0.025	-0.028	-0.030	-0.032	-0.033	-0.035	-0.035	-0.035	-0.035	-0.034	-0.033	-0.031	-0.029	-0.028	-0.026	-0.023	-0.019	-0.015	-0.011	-0.006	0.000
TOTAL DEAD LOAD DEFLECTION	0.000	-0.005	-0.020	-0.043	-0.072	-0.105	-0.142	-0.180	-0.220	-0.221	-0.260	-0.298	-0.335	-0.369	-0.399	-0.425	-0.446	-0.462	-0.472	-0.475	-0.472	-0.462	-0.446	-0.422	-0.391	-0.379	-0.354	-0.309	-0.259	-0.202	-0.139	-0.071	0.000
VERTICAL CURVE ORDINATE	0.000	0.000	0.000	0.000	0.000	0.000	0.000	0.000	0.000	0.000	0.000	0.000	0.000	0.000	0.000	0.000	0.000	0.000	0.000	0.000	0.000	0.000	0.000	0.000	0.000	0.000	0.000	0.000	0.000	0.000	0.000	0.000	0.000
SUPERELEVATION ORDINATE	0.000	0.023	0.047	0.070	0.093	0.116	0.139	0.161	0.155	0.156	0.150	0.142	0.135	0.128	0.120	0.114	0.106	0.099	0.091	0.084	0.077	0.069	0.062	0.056	0.048	0.045	0.041	0.034	0.028	0.021	0.013	0.007	0.000
REQUIRED CAMBER	0"	5/16"	13/16"	1 3/8"	2"	2 5/8"	3 3/8"	4 1/8"	4 1/2"	4 1/2"	4 15/16"	5 5/16"	5 5/8"	5 15/16"	6 1/4"	6 7/16"	6 5/8"	6 3/4"	6 3/4"	6 11/16"	6 9/16"	6 3/8"	6 1/16"	5 3/4"	5 1/4"	5 1/8"	4 3/4"	4 1/8"	3 7/16"	2 11/16"	1 13/16"	15/16"	0"

GIRDER 4	1.00	1.01	1.02	1.03	1.04	1.05	1.06	1.07	1.08	F.S. 1	1.09	1.10	1.11	1.12	1.13	1.14	1.15	1.16	1.17	1.18	1.19	1.20	1.21	1.22	1.23	F.S. 2	1.24	1.25	1.26	1.27	1.28	1.29	1.30
DEFLECTION DUE TO WT. OF STEEL	0.000	-0.001	-0.004	-0.010	-0.018	-0.027	-0.036	-0.047	-0.058	-0.058	-0.069	-0.080	-0.090	-0.099	-0.107	-0.114	-0.120	-0.124	-0.127	-0.127	-0.126	-0.124	-0.119	-0.112	-0.104	-0.101	-0.093	-0.081	-0.068	-0.053	-0.036	-0.018	0.000
DEFLECTION DUE TO WT. OF SLAB ▲	0.000	-0.001	-0.009	-0.022	-0.039	-0.060	-0.082	-0.106	-0.131	-0.131	-0.156	-0.180	-0.203	-0.225	-0.244	-0.260	-0.273	-0.283	-0.289	-0.292	-0.290	-0.284	-0.274	-0.259	-0.240	-0.233	-0.217	-0.189	-0.158	-0.123	-0.085	-0.044	0.000
DEFL. DUE TO WT. OF BARRIER RAIL	0.000	0.000	-0.001	-0.003	-0.004	-0.007	-0.009	-0.012	-0.015	-0.015	-0.017	-0.020	-0.022	-0.025	-0.027	-0.028	-0.030	-0.031	-0.031	-0.031	-0.031	-0.030	-0.029	-0.027	-0.025	-0.024	-0.023	-0.020	-0.016	-0.013	-0.009	-0.004	0.000
TOTAL DEAD LOAD DEFLECTION	0.000	-0.002	-0.014	-0.035	-0.061	-0.093	-0.128	-0.165	-0.204	-0.204	-0.242	-0.280	-0.315	-0.348	-0.377	-0.403	-0.423	-0.438	-0.447	-0.450	-0.447	-0.438	-0.421	-0.398	-0.369	-0.359	-0.333	-0.290	-0.242	-0.188	-0.130	-0.066	0.000
VERTICAL CURVE ORDINATE	0.000	0.000	0.000	0.000	0.000	0.000	0.000	0.000	0.000	0.000	0.000	0.000	0.000	0.000	0.000	0.000	0.000	0.000	0.000	0.000	0.000	0.000	0.000	0.000	0.000	0.000	0.000	0.000	0.000	0.000	0.000	0.000	0.000
SUPERELEVATION ORDINATE	0.000	0.012	0.023	0.036	0.048	0.061	0.073	0.085	0.096	0.097	0.094	0.090	0.086	0.082	0.077	0.073	0.068	0.063	0.059	0.054	0.049	0.044	0.040	0.035	0.030	0.029	0.029	0.022	0.017	0.013	0.009	0.004	0.000
REQUIRED CAMBER	0"	3/16"	7/16"	7/8"	1 5/16"	1 13/16"	2 3/8"	3"	3 5/8"	3 5/8"	4 1/16"	4 7/16"	4 13/16"	5 3/16"	5 7/16"	5 11/16"	5 7/8"	6"	6 1/16"	6 1/16"	5 15/16"	5 13/16"	5 1/2"	5 3/16"	4 13/16"	4 5/8"	4 5/16"	3 3/4"	3 1/8"	2 7/16"	1 11/16"	0 7/8"	0"

GIRDER 5	1.00	1.01	1.02	1.03	1.04	1.05	1.06	1.07	F.S. 1	1.08	1.09	1.10	1.11	1.12	1.13	1.14	1.15	1.16	1.17	1.18	1.19	1.20	1.21	1.22	1.23	F.S. 2	1.24	1.25	1.26	1.27	1.28	1.29	1.30
DEFLECTION DUE TO WT. OF STEEL	0.000	0.000	-0.003	-0.008	-0.015	-0.024	-0.034	-0.044	-0.054	-0.054	-0.065	-0.076	-0.085	-0.095	-0.103	-0.110	-0.115	-0.120	-0.122	-0.123	-0.122	-0.119	-0.115	-0.108	-0.100	-0.098	-0.090	-0.079	-0.066	-0.051	-0.035	-0.018	0.000
DEFLECTION DUE TO WT. OF SLAB ▲	0.000	-0.001	-0.007	-0.018	-0.034	-0.053	-0.074	-0.097	-0.121	-0.121	-0.145	-0.169	-0.191	-0.212	-0.231	-0.247	-0.260	-0.270	-0.277	-0.279	-0.278	-0.272	-0.263	-0.249	-0.230	-0.225	-0.208	-0.182	-0.152	-0.118	-0.082	-0.042	0.000
DEFL. DUE TO WT. OF BARRIER RAIL	0.000	0.000	-0.001	-0.002	-0.004	-0.006	-0.008	-0.011	-0.013	-0.013	-0.016	-0.018	-0.021	-0.023	-0.025	-0.026	-0.027	-0.028	-0.029	-0.029	-0.028	-0.028	-0.027	-0.025	-0.023	-0.022	-0.021	-0.018	-0.015	-0.012	-0.008	-0.004	0.000
TOTAL DEAD LOAD DEFLECTION	0.000	-0.001	-0.011	-0.029	-0.053	-0.083	-0.116	-0.152	-0.189	-0.189	-0.226	-0.263	-0.297	-0.329	-0.358	-0.383	-0.403	-0.418	-0.428	-0.431	-0.428	-0.419	-0.404	-0.382	-0.354	-0.346	-0.319	-0.279	-0.232	-0.181	-0.124	-0.064	0.000
VERTICAL CURVE ORDINATE	0.000	0.000	0.000	0.000	0.000	0.000	0.000	0.000	0.000	0.000	0.000	0.000	0.000	0.000	0.000	0.000	0.000	0.000	0.000	0.000	0.000	0.000	0.000	0.000	0.000	0.000	0.000	0.000	0.000	0.000	0.000	0.000	0.000
SUPERELEVATION ORDINATE	0.000	0.002	0.003	0.005	0.007	0.010	0.011	0.014	0.015	0.016	0.017	0.017	0.017	0.016	0.016	0.014	0.013	0.013	0.012	0.010	0.009	0.008	0.007	0.006	0.005	0.005	0.004	0.003	0.003	0.002	0.002	0.001	0.000
REQUIRED CAMBER	0"	1/16"	3/16"	3/8"	3/4"	1 1/8"	1 1/2"	2"	2 7/16"	2 7/16"	2 15/16"	3 3/8"	3 3/4"	4 1/8"	4 1/2"	4 3/4"	5"	5 3/16"	5 1/4"	5 5/16"	5 1/4"	5 1/8"	4 15/16"	4 11/16"	4 5/16"	4 3/16"	3 7/8"	3 3/8"	2 13/16"	2 3/16"	1 1/2"	13/16"	0"

GIRDER 6	1.00	1.01	1.02	1.03	1.04	1.05	1.06	1.07	F.S. 1	1.08	1.09	1.10	1.11	1.12	1.13	1.14	1.15	1.16	1.17	1.18	1.19	1.20	1.21	1.22	1.23	F.S. 2	1.24	1.25	1.26	1.27	1.28	1.29	1.30
DEFLECTION DUE TO WT. OF STEEL	0.000	0.000	-0.002	-0.007	-0.013	-0.021	-0.030	-0.041	-0.051	-0.051	-0.062	-0.072	-0.082	-0.091	-0.099	-0.106	-0.112	-0.116	-0.119	-0.120	-0.119	-0.117	-0.113	-0.107	-0.099	-0.097	-0.089	-0.078	-0.065	-0.050	-0.035	-0.018	0.000
DEFLECTION DUE TO WT. OF SLAB ▲	0.000	0.001	-0.003	-0.013	-0.027	-0.045	-0.065	-0.088	-0.110	-0.111	-0.134	-0.158	-0.180	-0.201	-0.219	-0.236	-0.249	-0.259	-0.266	-0.269	-0.268	-0.263	-0.254	-0.241	-0.223	-0.219	-0.202	-0.177	-0.148	-0.115	-0.079	-0.041	0.000
DEFL. DUE TO WT. OF BARRIER RAIL	0.000	0.000	-0.001	-0.002	-0.004	-0.006	-0.008	-0.010	-0.013	-0.013	-0.015	-0.017	-0.020	-0.022	-0.023	-0.025	-0.026	-0.027	-0.027	-0.027	-0.027	-0.026	-0.025	-0.024	-0.022	-0.021	-0.019	-0.017	-0.014	-0.011	-0.007	-0.004	0.000
TOTAL DEAD LOAD DEFLECTION	0.000	0.001	-0.006	-0.022	-0.044	-0.072	-0.104	-0.138	-0.174	-0.175	-0.211	-0.247	-0.281	-0.313	-0.342	-0.367	-0.387	-0.402	-0.412	-0.416	-0.414	-0.406	-0.392	-0.371	-0.344	-0.337	-0.310	-0.271	-0.226	-0.176	-0.121	-0.062	0.000
VERTICAL CURVE ORDINATE	0.000	0.000	0.000	0.000	0.000	0.000	0.000	0.000	0.000	0.000	0.000	0.000	0.000	0.000	0.000	0.000	0.000	0.000	0.000	0.000	0.000	0.000	0.000	0.000	0.000	0.000	0.000	0.000	0.000	0.000	0.000	0.000	0.000
SUPERELEVATION ORDINATE	0.000	-0.009	-0.016	-0.024	-0.031	-0.038	-0.045	-0.052	-0.059	-0.059	-0.067	-0.075	-0.074	-0.070	-0.065	-0.062	-0.058	-0.054	-0.050	-0.046	-0.043	-0.039	-0.036	-0.032	-0.029	-0.027	-0.025	-0.020	-0.017	-0.013	-0.009	-0.005	0.000
REQUIRED CAMBER	0"	1/16"	1/8"	0"	3/16"	3/8"	11/16"	1 1/16"	1 3/8"	1 3/8"	1 3/4"	2 1/16"	2 1/2"	2 15/16"	3 5/16"	3 11/16"	3 15/16"	4 3/16"	4 3/8"	4 7/16"	4 7/16"	4 7/16"	4 1/4"	4 1/16"	3 3/4"	3 3/4"	3 7/16"	3"	2 1/2"	1 15/16"	1 3/8"	11/16"	0"

SCHEMATIC CAMBER ORDINATES - SPAN 26

▲ INCLUDES SLAB, BUILDUP AND STAY-IN-PLACE FORMS

◆ FOR GIRDERS 1-4, FIELD SPLICE IS LOCATED BETWEEN POINTS 1.08 AND 1.09.

FOR GIRDERS 5 & 6, FIELD SPLICE IS LOCATED BETWEEN POINTS 1.07 AND 1.08.

NOTES:

1. VALUES ARE SHOWN IN FEET (DECIMAL FORMAT), EXCEPT "REQUIRED CAMBER" WHICH IS GIVEN IN INCHES.
2. FOR GIRDER DESIGNATIONS, SEE FRAMING PLAN AND GIRDER DETAILS SHEETS.
3. DEFLECTIONS IN THE DOWNWARD DIRECTION ARE NEGATIVE. A REQUIRED CAMBER IN THE UPWARD DIRECTION IS POSITIVE. SIGN CONVENTION FOR DEAD LOAD DEFLECTION.

(+) 0 (-)

4. SLOPE FOR ZERO CAMBER BASE VARIES.

PROJECT NO. U-2524C

GUILFORD COUNTY

STATION: POT 407+73.35 -L-
= POT 29+32.06 -Y4-

SHEET 8 OF 8

NORTH CAROLINA PROFESSIONAL SEAL 28479 ENGINEER KEVIN G. BAILEY 5-30-13

STATE OF NORTH CAROLINA
DEPARTMENT OF TRANSPORTATION
RALEIGH

STEEL GIRDER CAMBERS
UNIT H
SPAN 26

-LEFT LANE-

REVISIONS						SHEET NO.
NO.	BY:	DATE:	NO.	BY:	DATE:	S-147
1			3			TOTAL SHEETS
2			4			836

STV / Ralph Whitehead Associates, Inc.
1000 West Morehead St., Ste. 200
Charlotte, NC 28208
NC License No. F-0991

DRAWN BY : TRL DATE : 2-13
CHECKED BY : MFR DATE : 2-13
DESIGN ENGINEER OF RECORD: K. BAILEY DATE : 5-13

5/30/2013 4:58:17 PM R:\ustation\Finals\Unit H - Camber Span 26.dgn

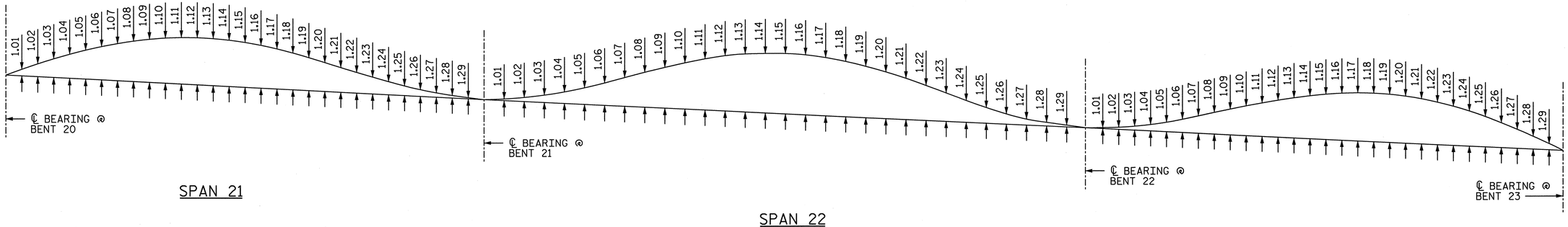

SPAN 21

SPAN 22

SPAN 23

UNIT G GIRDERS 1-6 SCHEMATIC CAMBER ORDINATES

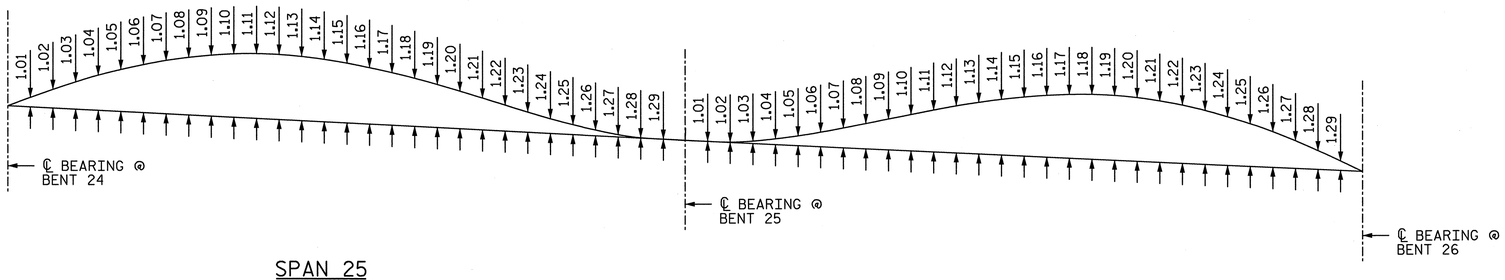

SPAN 25

SPAN 26

UNIT H GIRDERS 1-6 SCHEMATIC CAMBER ORDINATES

NOTE:
FOR ACTUAL GIRDER CAMBERS, SEE CORRESPONDING GIRDER CAMBERS SHEET.

PROJECT NO. U-2524C
GUILFORD COUNTY
STATION: POT 407+73.35 -L-
= POT 29+32.06 -Y4-

NORTH CAROLINA PROFESSIONAL SEAL 28479 ENGINEER KEVIN G. BAILEY
5-30-13

STATE OF NORTH CAROLINA
DEPARTMENT OF TRANSPORTATION
RALEIGH

STEEL GIRDER CAMBERS
SCHEMATIC CAMBER ORDINATES
UNITS G & H

-LEFT LANE-

REVISIONS							
NO.	BY:	DATE:	NO.	BY:	DATE:		
1			3				
2			4				

SHEET NO. S-148
TOTAL SHEETS 83

STV / Ralph Whitehead Associates, Inc.
1000 West Morehead St., Ste. 200
Charlotte, NC 28208
NC License No. F-0991

DRAWN BY : VMW	DATE : 2-13	DESIGN ENGINEER OF RECORD: M. ROBBINS	DATE : 5-13
CHECKED BY : MFR	DATE : 2-13		

5/30/2013 4:58:21 PM R:\ustation\Finals\Unit G & H - Schematic Camber Ordinates.dgn

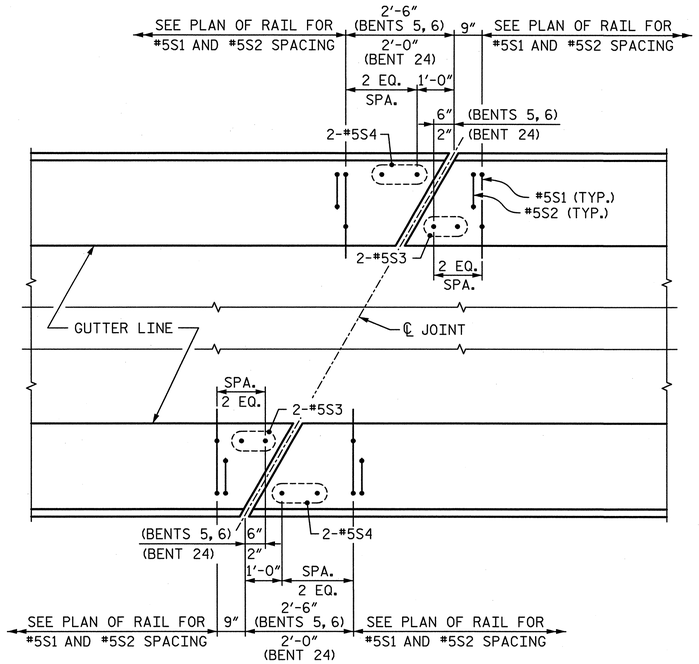

PLAN AT JOINTS, BENTS 5, 6 & 24

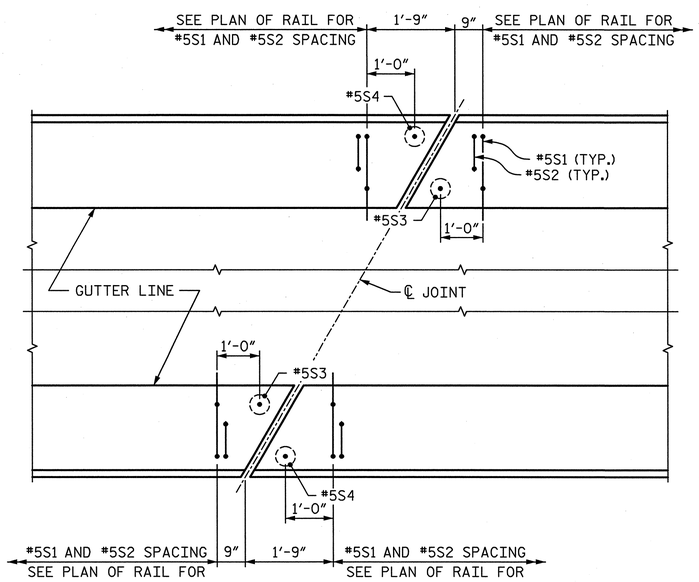

PLAN AT JOINTS, BENT 26 & END BENT 2

(BENT 26 SHOWN, END BENT 2 SIMILAR)

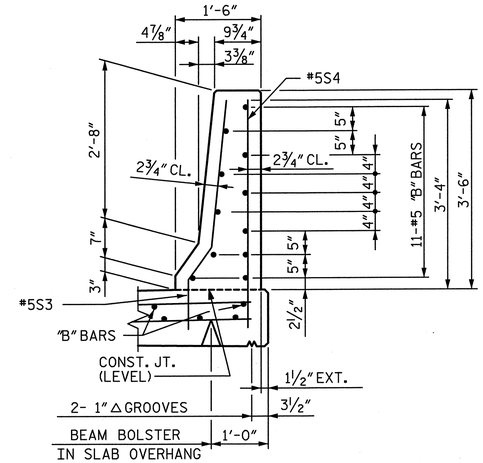

TYPICAL SECTION AT JOINT

(AT BENTS 5, 6, 24, 26 AND END BENT 2)

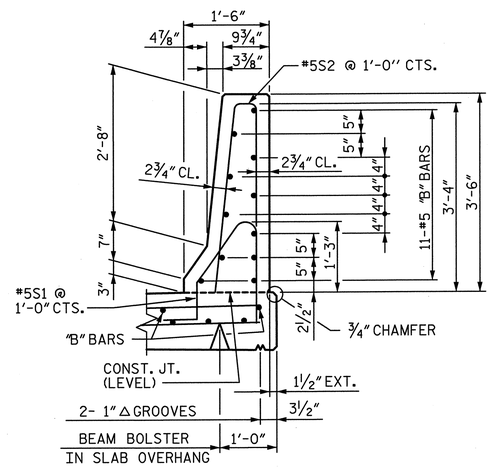

TYPICAL SECTION THRU RAIL

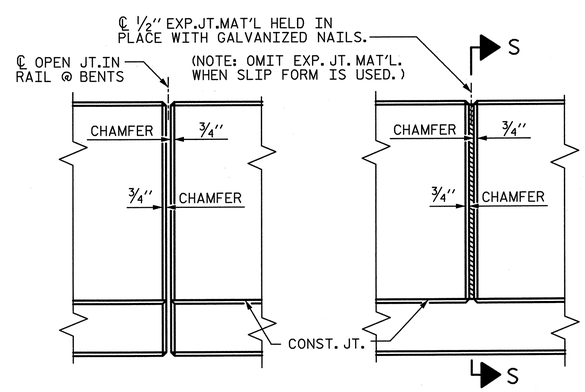

ELEVATION AT EXPANSION JOINTS

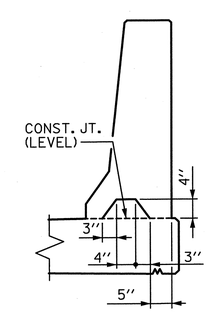

SECTION S-S

AT DAM IN OPEN JOINT (THIS IS TO BE USED ONLY WHEN SLIP FORM IS USED)

BARRIER RAIL DETAILS

NOTES

THE BARRIER RAIL IN EACH SPAN SHALL NOT BE CAST UNTIL ALL SLAB CONCRETE IN THAT SPAN HAS BEEN CAST AND HAS REACHED A MINIMUM COMPRESSIVE STRENGTH OF 3,000 PSI.

ALL REINFORCING STEEL IN BARRIER RAILS SHALL BE EPOXY COATED.

GROOVED CONTRACTION JOINTS, ½" IN DEPTH, SHALL BE TOOLED IN ALL EXPOSED FACES OF THE BARRIER RAIL AND IN ACCORDANCE WITH ARTICLE 825-10(B) OF THE STANDARD SPECIFICATIONS. THE CONTRACTION JOINT SHALL BE LOCATED AT EACH THIRD POINT BETWEEN BARRIER RAIL EXPANSION JOINTS. ONLY ONE CONTRACTION JOINT IS REQUIRED AT MIDPOINT OF BARRIER RAIL SEGMENTS LESS THAN 20 FEET IN LENGTH AND NO CONTRACTION JOINTS ARE REQUIRED FOR THOSE SEGMENTS LESS THAN 10 FEET IN LENGTH.

TRANSITION ZONE BARRIER RAIL LENGTH AND QUANTITIES NOT INCLUDED. SEE SHEET 8 OF 8 FOR TRANSITION ZONE BARRIER RAIL.

CONCRETE BARRIER RAIL ON APPROACH SLABS, LENGTH AND QUANTITIES, NOT INCLUDED. SEE "BRIDGE APPROACH SLAB" SHEETS.

THE #5S3 & #5S4 BARS SHALL BE INSTALLED, USING AN ADHESIVE ANCHORING SYSTEM. THE YIELD LOAD FOR THE #5S3 & #5S4 BARS IS 18.6 KIPS. FIELD TESTING FOR THE ADHESIVE BONDING SYSTEM IS NOT REQUIRED.

BAR TYPES

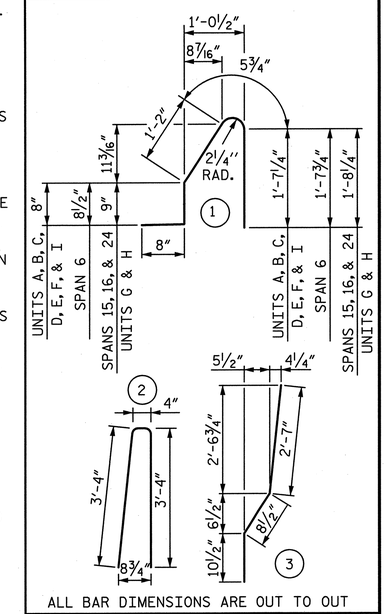

ALL BAR DIMENSIONS ARE OUT TO OUT

BILL OF MATERIAL

FOR CONCRETE BARRIER RAIL ONLY

	BAR	NO.	SIZE	TYPE	LENGTH	WEIGHT
	✱ B1	1,155	#5	STR	29'-6"	35,538
	✱ B2	528	#5	STR	27'-6"	15,144
	✱ B3	440	#5	STR	25'-6"	11,702
	✱ B4	88	#5	STR	23'-6"	2,157
	✱ B5	44	#5	STR	22'-1"	1,013
	✱ B6	22	#5	STR	20'-10"	478
	✱ B7	462	#5	STR	16'-5"	7,911
	✱ B8	352	#5	STR	15'-3"	5,599
	✱ B9	990	#5	STR	14'-5"	14,886
	✱ B10	286	#5	STR	13'-3"	3,952
	✱ B11	88	#5	STR	12'-3"	1,124
UNITS A, B, C, D, E, F, & I	✱ S1	4,749	#5	1	4'-7"	22,702
SPAN 6	✱ S1	516	#5	1	4'-8"	2,512
SPANS 15, 16, & 24, UNITS G & H	✱ S1	3,127	#5	1	4'-9"	15,492
	✱ S2	8,392	#5	2	7'-0"	61,270
	✱ S3	15	#5	3	4'-2"	65
	✱ S4	15	#5	STR.	4'-0"	63
	✱ EPOXY COATED REINFORCING STEEL					201,608 LBS.
	CLASS AA CONCRETE					1,142 CU. YDS.
	CONCRETE BARRIER RAIL					8,401.0 LIN. FT.

PROJECT NO. U-2524C

GUILFORD COUNTY

STATION: POT 407+73.35 -L-
= POT 29+32.06 -Y4-

SHEET 1 OF 8

STATE OF NORTH CAROLINA
DEPARTMENT OF TRANSPORTATION
RALEIGH

CONCRETE BARRIER RAIL

-LEFT LANE-

NORTH CAROLINA PROFESSIONAL SEAL 28479 ENGINEER KEVIN G. BAILEY 5-30-13

DRAWN BY : KMG	DATE : 12-12	DESIGN ENGINEER OF RECORD: T. TOWNSEND	DATE : 5-13
CHECKED BY : AC	DATE : 12-12		

STV / Ralph Whitehead Associates, Inc.
1000 West Morehead St., Ste. 200
Charlotte, NC 28208
NC License No. F-0991

REVISIONS

NO.	BY:	DATE:	NO.	BY:	DATE:
1			3		
2			4		

SHEET NO. S-149

TOTAL SHEETS 836

5/30/2013 10:34:28 PM R:\ustation\Finals\Plan of Rails Sheet 1 of 8.dgn

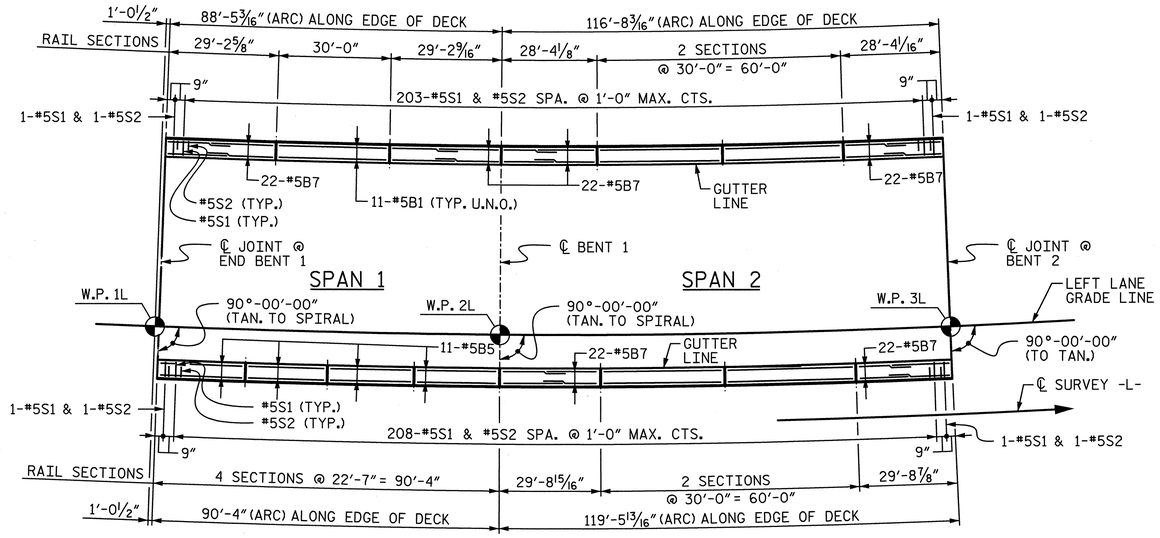

PLAN - UNIT A

(SPANS 1 & 2)

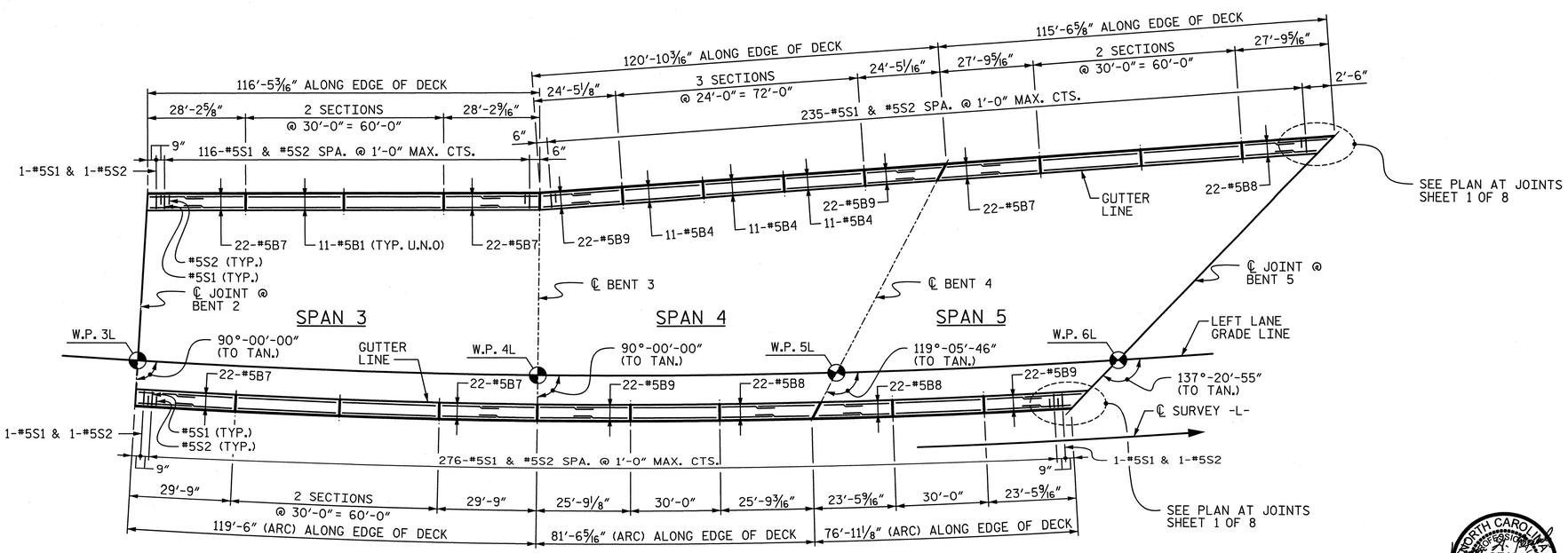

PLAN - UNIT B

(SPANS 3, 4 & 5)

PROJECT NO. U-2524C

GUILFORD COUNTY

STATION: POT 407+73.35 -L-
= POT 29+32.06 -Y4-

SHEET 2 OF 8

STATE OF NORTH CAROLINA
DEPARTMENT OF TRANSPORTATION
RALEIGH

PLAN OF RAILS CONCRETE BARRIER RAIL UNITS A & B

-LEFT LANE-

NORTH CAROLINA PROFESSIONAL SEAL 28479 ENGINEER KEVIN G. BAILEY 5-30-13

REVISIONS							SHEET NO.
NO.	BY:	DATE:	NO.	BY:	DATE:		S-150
1			3				TOTAL SHEETS
2			4				836

STV / Ralph Whitehead Associates, Inc.
1000 West Morehead St., Ste. 200
Charlotte, NC 28208
NC License No. F-0991

DRAWN BY : KMG DATE : 12-12
CHECKED BY : AC DATE : 12-12

DESIGN ENGINEER OF RECORD: T. TOWNSEND DATE : 5-13

5/30/2013 4:58:30 PM R:\ustation\Finals\Plan of Rails Sheet 2 of 8.dgn

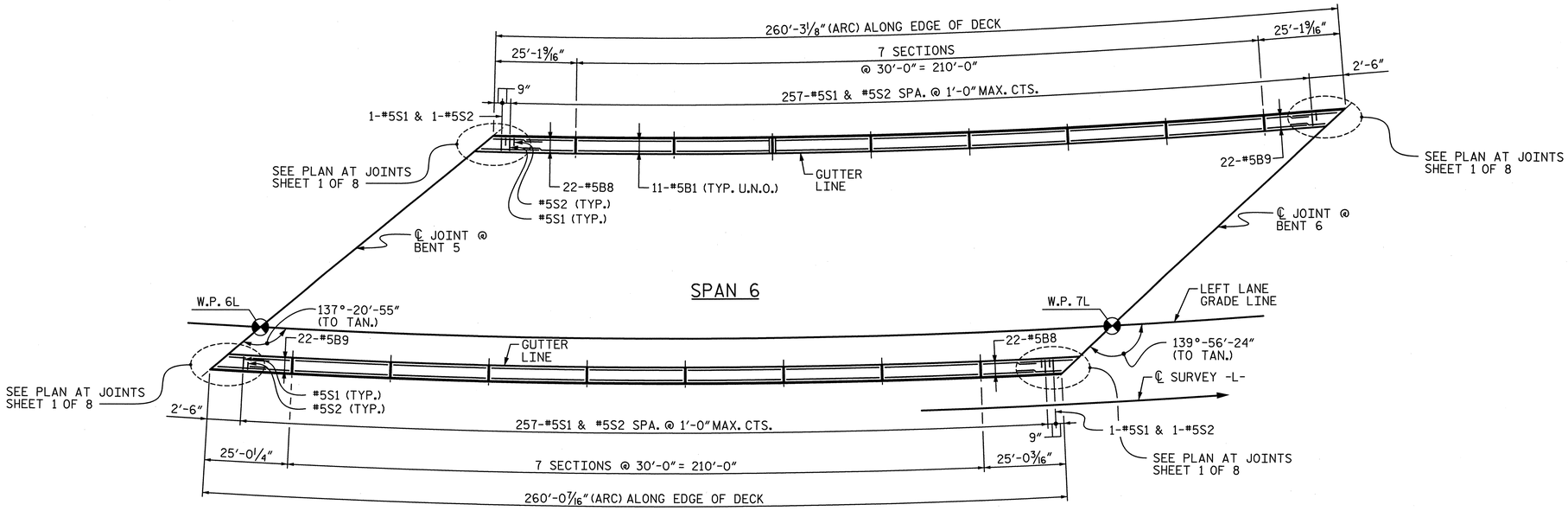

PLAN - SPAN 6

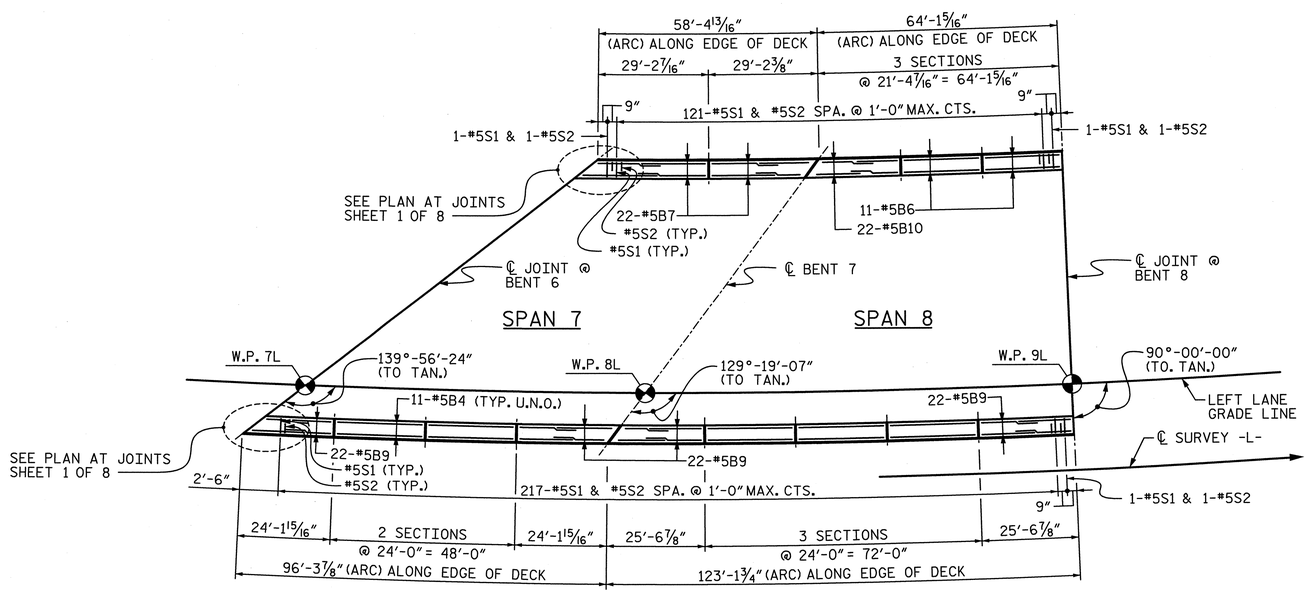

PLAN - UNIT C

(SPANS 7 & 8)

PROJECT NO. U-2524C

GUILFORD COUNTY

STATION: POT 407+73.35 -L-

= POT 29+32.06 -Y4-

SHEET 3 OF 8

STATE OF NORTH CAROLINA
DEPARTMENT OF TRANSPORTATION
RALEIGH

PLAN OF RAILS
CONCRETE BARRIER RAIL
SPAN 6 & UNIT C

-LEFT LANE-

NORTH CAROLINA PROFESSIONAL SEAL 28479 ENGINEER KEVIN G. BAILEY
5-30-13

REVISIONS								SHEET NO.
NO.	BY:	DATE:	NO.	BY:	DATE:			S-151
1			3					TOTAL SHEETS
2			4					336

STV / Ralph Whitehead Associates, Inc.
1000 West Morehead St., Ste. 200
Charlotte, NC 28208
NC License No. F-0991

DRAWN BY : KMG DATE : 12-12
CHECKED BY : AC DATE : 12-12

DESIGN ENGINEER OF RECORD: T. TOWNSEND DATE : 5-13

5/30/2013 4:58:33 PM R:\ustation\Finals\Plan of Rails Sheet 3 of 8.dgn

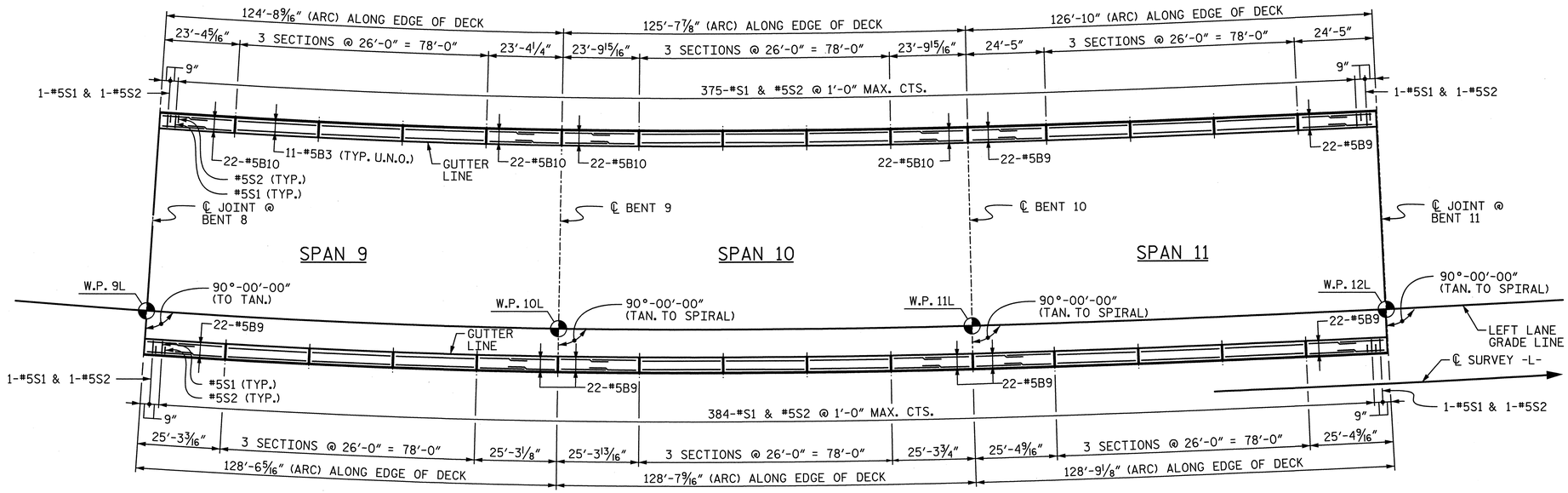

PLAN - UNIT D

(SPANS 9, 10 & 11)

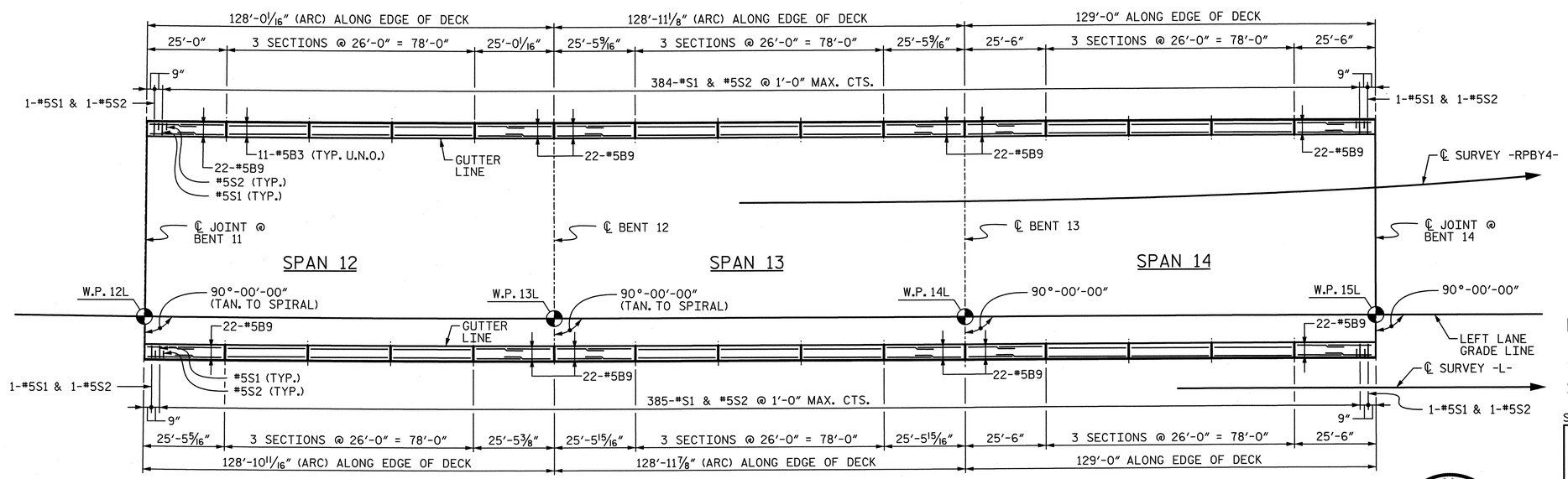

PLAN - UNIT E

(SPANS 12, 13 & 14)

NORTH CAROLINA PROFESSIONAL SEAL 28479 ENGINEER KEVIN G. BAILEY 5-30-13

PROJECT NO. U-2524C
GUILFORD COUNTY
STATION: POT 407+73.35 -L-
= POT 29+32.06 -Y4-

SHEET 4 OF 8

STATE OF NORTH CAROLINA
DEPARTMENT OF TRANSPORTATION
RALEIGH

PLAN OF RAILS
CONCRETE BARRIER RAIL
UNIT D & E

-LEFT LANE-

REVISIONS							SHEET NO.
NO.	BY:	DATE:	NO.	BY:	DATE:		S-152
1			3				TOTAL SHEETS
2			4				836

STV / Ralph Whitehead Associates, Inc.
1000 West Morehead St., Ste. 200
Charlotte, NC 28208
NC License No. F-0991

DRAWN BY : KMG	DATE : 12-12	DESIGN ENGINEER OF RECORD: T. TOWNSEND	DATE : 5-13
CHECKED BY : AC	DATE : 12-12		

5/30/2013 4:58:39 PM R:\ustation\Finals\Plan of Rails Sheet 4 of 8.dgn

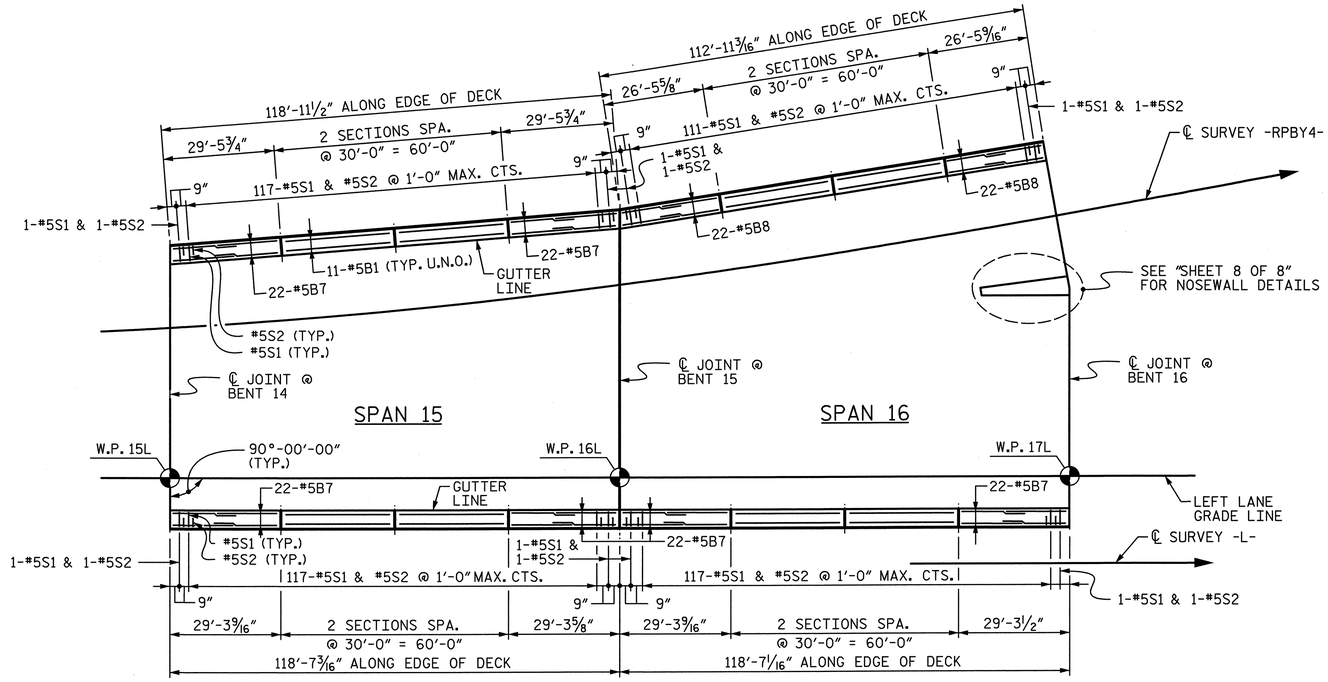

PLAN - SPANS 15 & 16

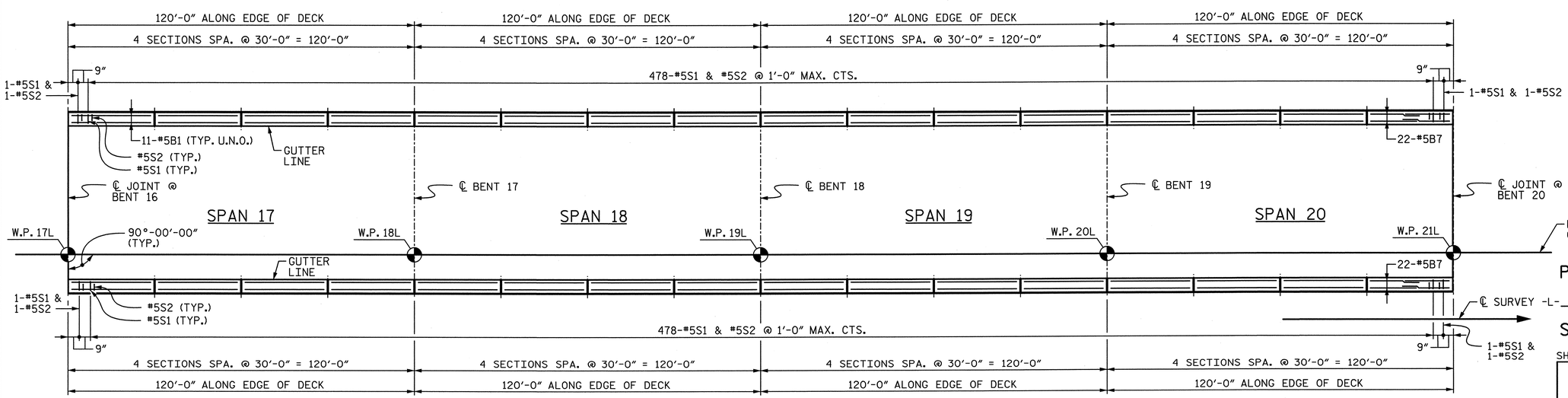

PLAN - UNIT F

(SPANS 17, 18, 19 & 20)

PROJECT NO. U-2524C

GUILFORD COUNTY

STATION: POT 407+73.35 -L-
= POT 29+32.06 -Y4-

SHEET 5 OF 8

STATE OF NORTH CAROLINA
DEPARTMENT OF TRANSPORTATION
RALEIGH

PLAN OF RAILS CONCRETE BARRIER RAIL SPANS 15, 16 & UNIT F

-LEFT LANE-

NORTH CAROLINA PROFESSIONAL SEAL 28479 ENGINEER KEVIN G. BAILEY 5-30-13

DRAWN BY : KMG	DATE : 12-12	DESIGN ENGINEER OF RECORD: T. TOWNSEND	DATE : 5-13
CHECKED BY : AC	DATE : 12-12		

STV / Ralph Whitehead Associates, Inc.
1000 West Morehead St., Ste. 200
Charlotte, NC 28208
NC License No. F-0991

REVISIONS

NO.	BY:	DATE:	NO.	BY:	DATE:
1			3		
2			4		

SHEET NO. S-153

TOTAL SHEETS 83

5/30/2013 4:58:43 PM R:\ustation\Finals\Plan of Rails Sheet 5 of 8.dgn

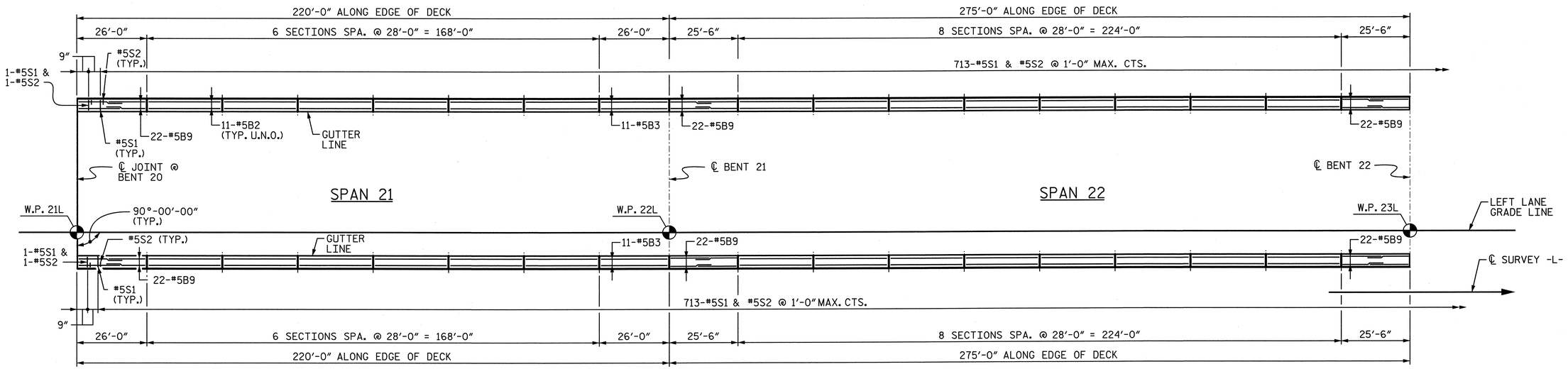

PLAN - UNIT G

(SPANS 21 & 22)

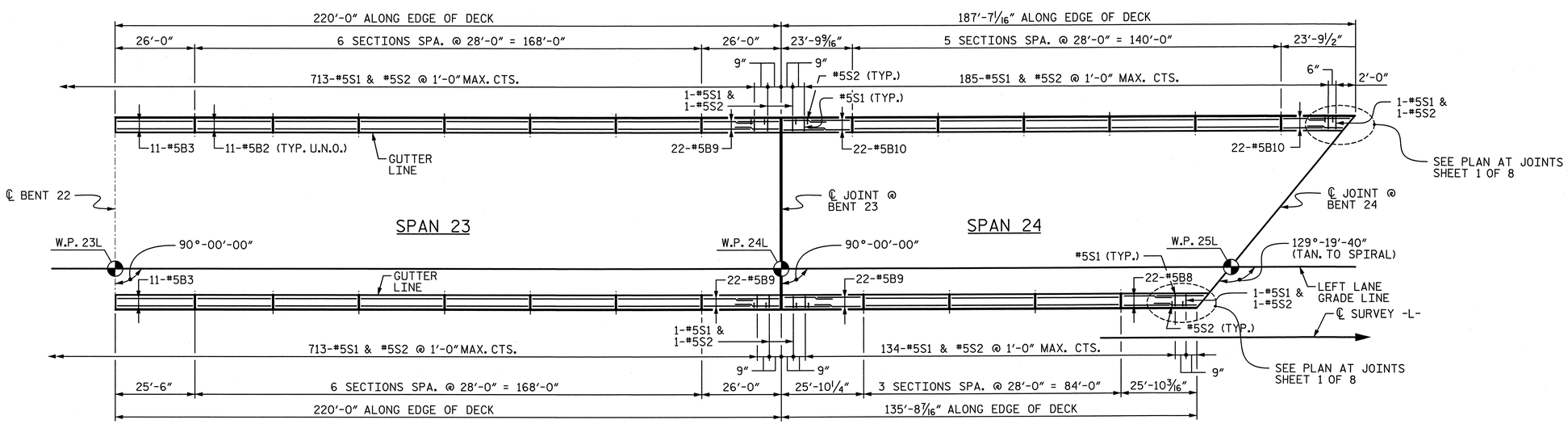

PLAN - UNIT G & SPAN 24

(SPANS 23 & 24)

PROJECT NO. U-2524C

GUILFORD COUNTY

STATION: POT 407+73.35 -L-
= POT 29+32.06 -Y4-

SHEET 6 OF 8

NORTH CAROLINA PROFESSIONAL SEAL 28479 ENGINEER KEVIN G. BAILEY 5-30-13

STATE OF NORTH CAROLINA
DEPARTMENT OF TRANSPORTATION
RALEIGH

PLAN OF RAILS
CONCRETE BARRIER RAIL
UNIT G & SPAN 24

-LEFT LANE-

REVISIONS								SHEET NO.
NO.	BY:	DATE:	NO.	BY:	DATE:			S-154
1			3					TOTAL SHEETS
2			4					836

STV / Ralph Whitehead Associates, Inc.
1000 West Morehead St., Ste. 200
Charlotte, NC 28208
NC License No. F-0991

DRAWN BY : KMG	DATE : 12-12	DESIGN ENGINEER OF RECORD: T. TOWNSEND	DATE : 5-13
CHECKED BY : AC	DATE : 12-12		

5/30/2013 4:58:47 PM R:\ustation\Finals\Plan of Rails Sheet 6 of 8.dgn

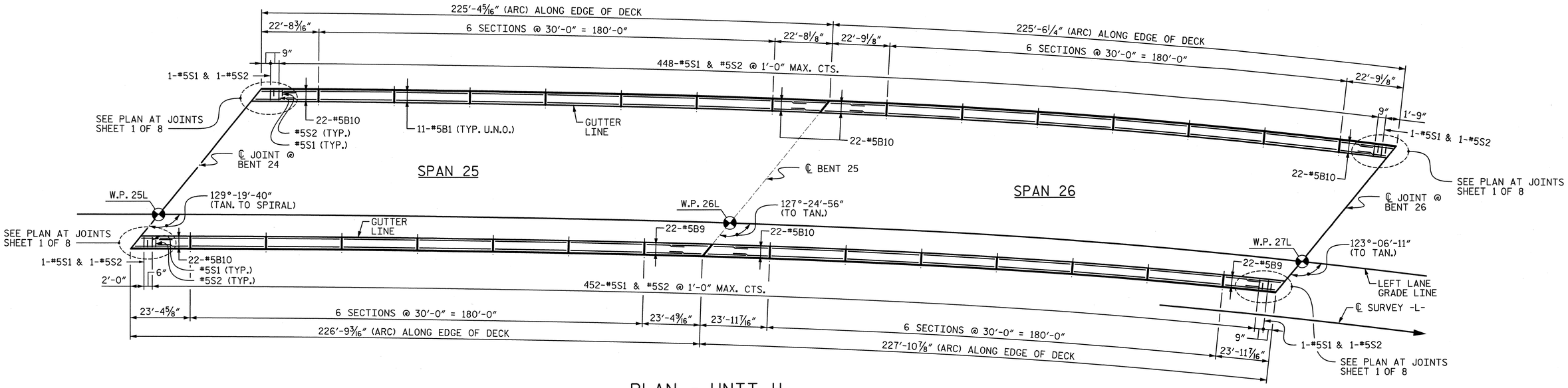

PLAN - UNIT H

(SPANS 25 & 26)

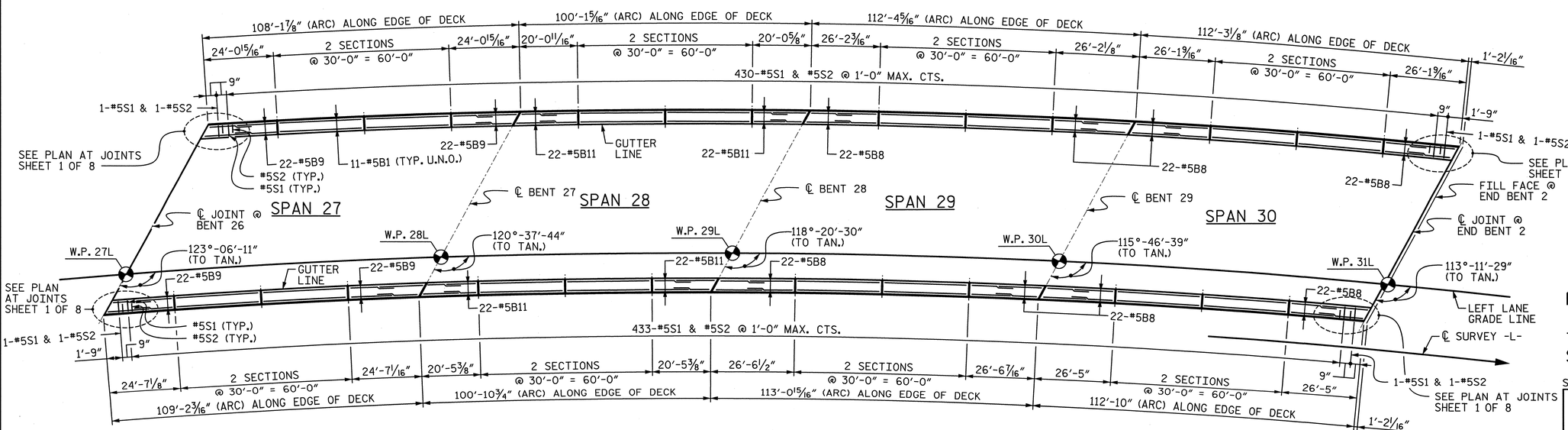

PLAN - UNIT I

(SPANS 27, 28, 29 & 30)

NORTH CAROLINA PROFESSIONAL SEAL 28479 ENGINEER KEVIN G. BAILEY 5-30-13

PROJECT NO. U-2524C

GUILFORD COUNTY

STATION: POT 407+73.35 -L-
= POT 29+32.06 -Y4-

SHEET 7 OF 8

STATE OF NORTH CAROLINA
DEPARTMENT OF TRANSPORTATION
RALEIGH

PLAN OF RAILS
CONCRETE BARRIER RAIL
UNITS H & I

-LEFT LANE-

REVISIONS							SHEET NO.
NO.	BY:	DATE:	NO.	BY:	DATE:		S-155
1			3				TOTAL SHEETS
2			4				836

STV / Ralph Whitehead Associates, Inc.
1000 West Morehead St., Ste. 200
Charlotte, NC 28208
NC License No. F-0991

DRAWN BY : KMG	DATE : 12-12	DESIGN ENGINEER OF RECORD: T. TOWNSEND	DATE : 5-13
CHECKED BY : AC	DATE : 12-12		

R:\ustation\Finals\Plan of Rails Sheet 7 of 8.dgn 4:58:51 PM 5/30/2013

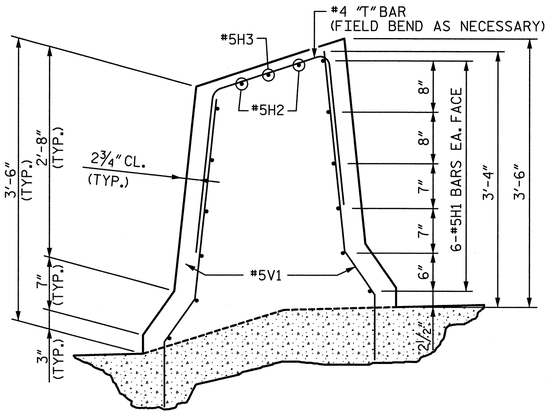

SECTION A-A

(SEE SHEET 1 OF 8 FOR ADDITONAL DETAILS)

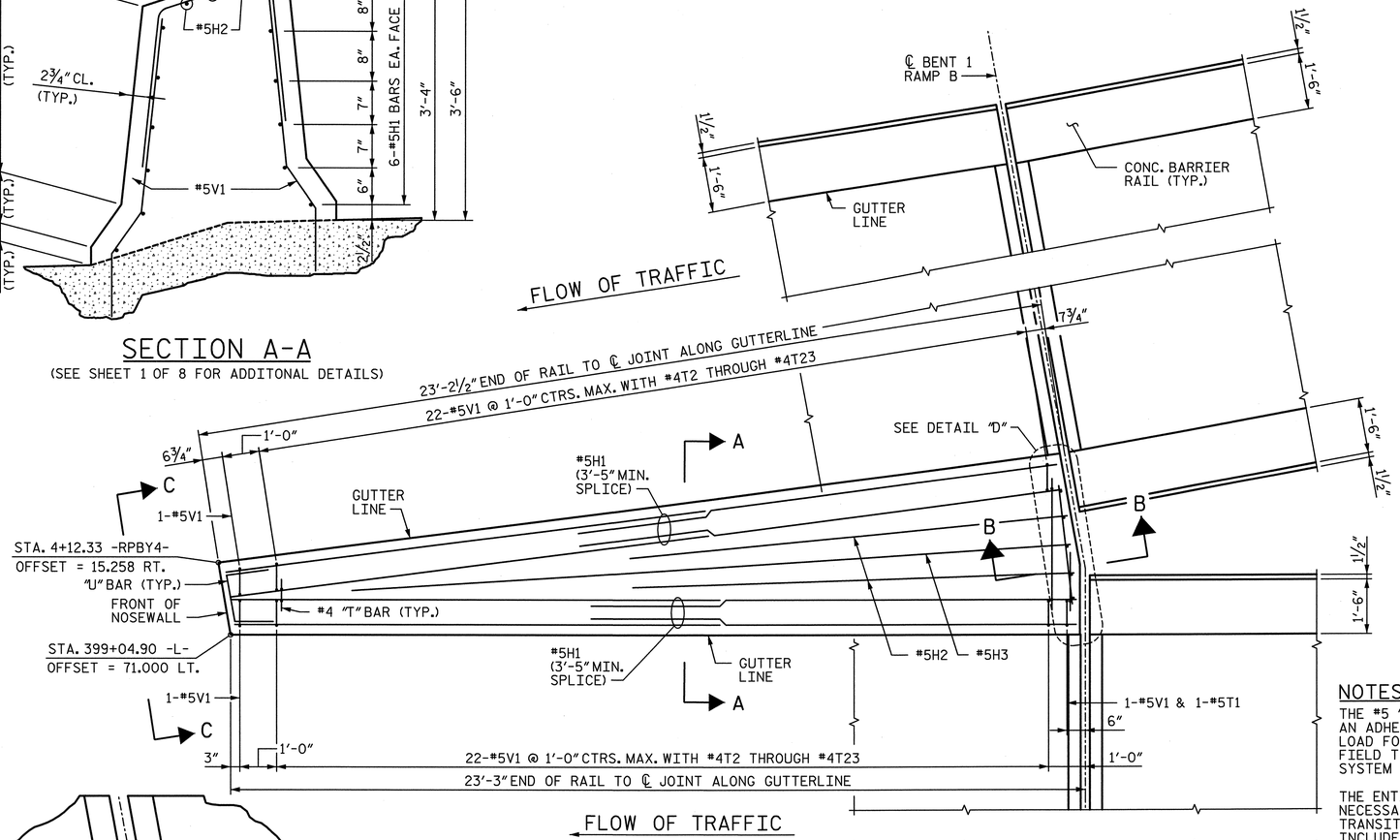

BARRIER RAIL PLAN AT TRANSITION ZONE

NOTES:

THE #5 "V" BARS SHALL BE INSTALLED USING AN ADHESIVE ANCHORING SYSTEM. THE YIELD LOAD FOR THE #5 "V" BARS IS 18.6 KIPS. FIELD TESTING FOR THE ADHESIVE BONDING SYSTEM IS NOT REQUIRED.

THE ENTIRE COST FOR LABOR AND MATERIALS NECESSARY TO FABRICATE AND INSTALL TRANSITION ZONE BARRIER RAIL SHALL BE INCLUDED IN THE LIN. FT. PRICE BID FOR CONCRETE BARRIER RAIL. NO SEPARATE MEASUREMENT OR PAYMENT WILL BE MADE.

BAR TYPES

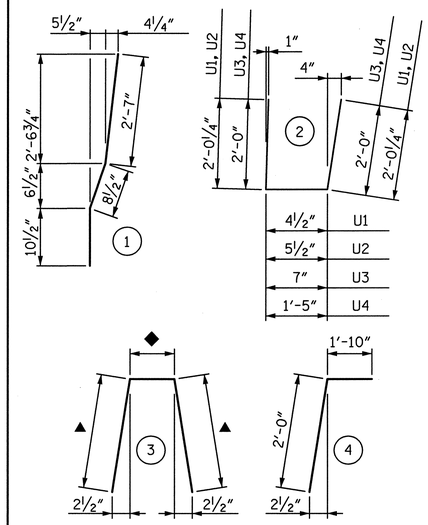

"T" BAR TABLE		
BAR	◆	▲
T2	4"	2'-0"
T3	6"	2'-0"
T4	7½"	2'-0¼"
T5	9"	2'-0"
T6	10½"	2'-0¼"
T7	1'-0"	2'-0"
T8	1'-1½"	2'-0¼"
T9	1'-3"	2'-0"
T10	1'-4½"	2'-0¼"
T11	1'-6"	2'-0"
T12	1'-7½"	2'-0¼"
T13	1'-9"	2'-0"
T14	1'-10½"	2'-0¼"
T15	2'-0"	2'-0"
T16	2'-1½"	2'-0¼"
T17	2'-3½"	2'-0¼"
T18	2'-5"	2'-0"
T19	2'-6½"	2'-0¼"
T20	2'-8"	2'-0"
T21	2'-9½"	2'-0¼"
T22	2'-11"	2'-0"
T23	3'-0½"	2'-0¼"

BILL OF MATERIAL

FOR TRANSITION ZONE ONLY

BAR	NO.	SIZE	TYPE	LENGTH	WEIGHT
✳ H1	24	#5	STR	13'-3"	332
✳ H2	2	#5	STR	13'-0"	27
✳ H3	1	#5	STR	19'-6"	20
✳ H4	5	#5	STR	3'-2"	17
✳ T1	1	#4	4	3'-10"	3
✳ T2	1	#4	3	4'-4"	3
✳ T3	1	#4	3	4'-6"	3
✳ T4	1	#4	3	4'-8"	3
✳ T5	1	#4	3	4'-9"	3
✳ T6	1	#4	3	4'-11"	3
✳ T7	1	#4	3	5'-0"	3
✳ T8	1	#4	3	5'-2"	4
✳ T9	1	#4	3	5'-3"	4
✳ T10	1	#4	3	5'-5"	4
✳ T11	1	#4	3	5'-6"	4
✳ T12	1	#4	3	5'-8"	4
✳ T13	1	#4	3	5'-9"	4
✳ T14	1	#4	3	5'-11"	4
✳ T15	1	#4	3	6'-0"	4
✳ T16	1	#4	3	6'-2"	4
✳ T17	1	#4	3	6'-4"	4
✳ T18	1	#4	3	6'-5"	4
✳ T19	1	#4	3	6'-7"	4
✳ T20	1	#4	3	6'-8"	5
✳ T21	1	#4	3	6'-10"	5
✳ T22	1	#4	3	6'-11"	5
✳ T23	1	#4	3	7'-1"	5
✳ U1	1	#5	2	4'-5"	5
✳ U2	1	#5	2	4'-6"	5
✳ U3	1	#5	2	4'-7"	5
✳ U4	1	#5	2	5'-5"	6
✳ V1	47	#5	1	4'-2"	204
✳ V2	5	#5	STR	4'-0"	21
✳ EPOXY COATED REINFORCING STEEL					731 LBS.
CLASS AA CONCRETE					7.8 CU. YDS.
CONCRETE BARRIER RAIL					23.3 LIN. FT.

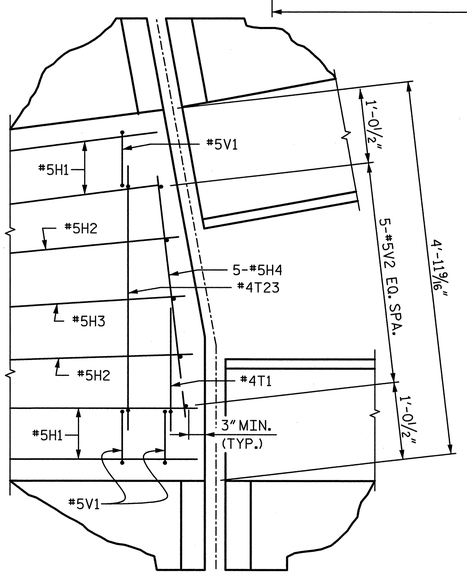

DETAIL "D"

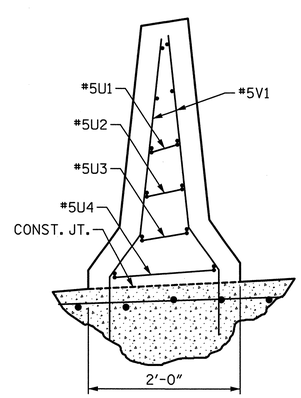

VIEW C-C

("H" BARS NOT LABELED FOR CLARITY, SEE SECTION A-A)

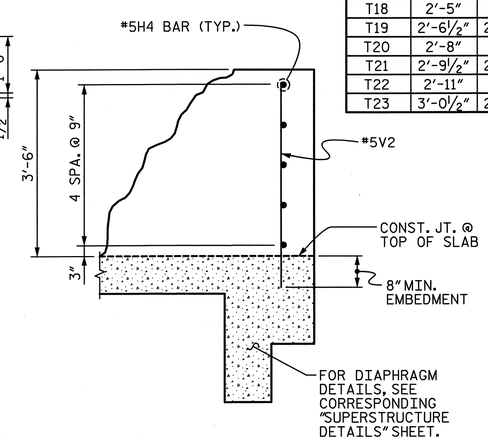

SECTION B-B

NORTH CAROLINA PROFESSIONAL SEAL 28479 ENGINEER KEVIN G. BAILEY 5-30-13

PROJECT NO. U-2524C

GUILFORD COUNTY

STATION: POT 407+73.35 -L-
= POT 29+32.06 -Y4-

SHEET 8 OF 8

STATE OF NORTH CAROLINA
DEPARTMENT OF TRANSPORTATION
RALEIGH

PLAN OF RAILS CONCRETE BARRIER RAIL TRANSITION ZONE DETAILS

-LEFT LANE-

DRAWN BY : TJT DATE : 4-13
CHECKED BY : PEK DATE : 4-13

DESIGN ENGINEER OF RECORD: T. TOWNSEND DATE : 5-13

STV / Ralph Whitehead Associates, Inc.
1000 West Morehead St., Ste. 200
Charlotte, NC 28208
NC License No. F-0991

REVISIONS							SHEET NO.
NO.	BY:	DATE:	NO.	BY:	DATE:		S-156
1			3				TOTAL SHEETS
2			4				83

R:\ustation\Finals\Plan of Rails Sheet 8 of 8.dgn 4:58:56 PM 5/30/2013

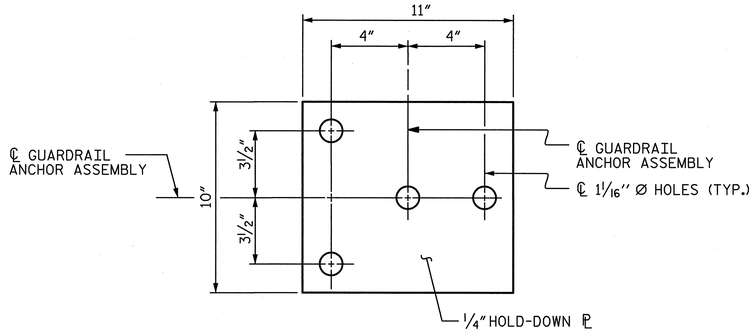

PLAN

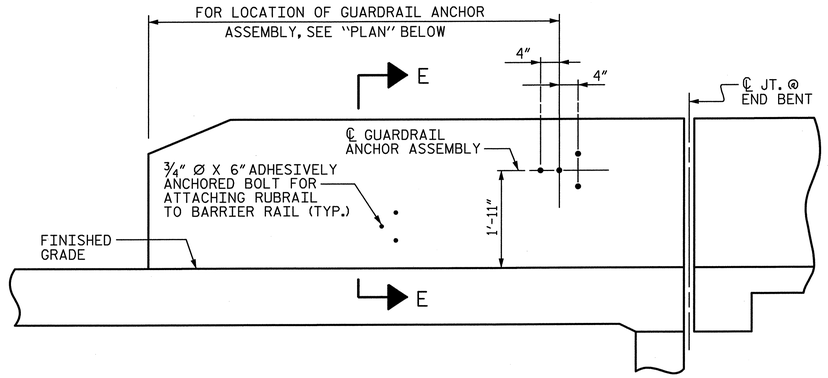

ELEVATION

(END BENT 1 SHOWN, END BENT 2 SIMILAR)

NOTES

THE GUARDRAIL ANCHOR ASSEMBLY SHALL CONSIST OF A 1/4" HOLD-DOWN PLATE AND 4 - 7/8" Ø BOLTS WITH NUTS AND WASHERS, RUBRAIL, AND ADHESIVELY ANCHORED BOLTS.

THE HOLD-DOWN PLATE SHALL CONFORM TO AASHTO M270 GRADE 36. AFTER FABRICATION, THE HOLD-DOWN PLATE SHALL BE HOT-DIP GALVANIZED IN ACCORDANCE WITH AASHTO M111.

BOLTS SHALL CONFORM TO THE REQUIREMENTS OF ASTM A307 AND NUTS SHALL CONFORM TO THE REQUIREMENTS OF AASHTO M291. BOLTS, NUTS AND WASHERS SHALL BE GALVANIZED. (AT THE CONTRACTOR'S OPTION, STAINLESS STEEL BOLTS, NUTS AND WASHERS MAY BE USED AS AN ALTERNATE FOR THE 7/8" Ø GALVANIZED BOLTS, NUTS AND WASHERS. THEY SHALL CONFORM TO OR EXCEED THE MECHANICAL REQUIREMENTS OF ASTM A307. THE USE OF THIS ALTERNATE SHALL BE APPROVED BY THE ENGINEER.)

THE GUARDRAIL ANCHOR ASSEMBLY IS REQUIRED AT ALL POINTS WHERE APPROACH GUARDRAIL IS TO BE ATTACHED TO THE END OF BARRIER RAIL. FOR POINTS OF ATTACHMENT, SEE SKETCH.

AFTER INSTALLATION, THE EXPOSED THREAD OF THE BOLT SHALL BE BURRED WITH A SHARP POINTED TOOL.

THE COST OF THE GUARDRAIL ANCHOR ASSEMBLY SHALL BE INCLUDED IN THE UNIT CONTRACT PRICE BID FOR CONCRETE BARRIER RAIL.

THE 1 1/4" Ø HOLES SHALL BE FORMED OR DRILLED WITH A CORE BIT. IMPACT TOOLS WILL NOT BE PERMITTED. ANY CONCRETE DAMAGED BY THIS WORK SHALL BE REPAIRED TO THE SATISFACTION OF THE ENGINEER.

THE C6 X 8.2 RUBRAIL IS TO BE ADHESIVELY ANCHORED TO THE RAIL USING THREE 3/4" Ø X 6" BOLTS WITH WASHERS. LEVEL ONE FIELD TESTING IS REQUIRED, AND THE YIELD LOAD OF THE 3/4" Ø BOLT IS 12 KIPS. FOR ADHESIVELY ANCHORED ANCHOR BOLTS OR DOWELS, SEE STANDARD SPECIFICATIONS. SEE ROADWAY STANDARD 862.03 FOR DETAILS AND LOCATION OF THE RUBRAIL.

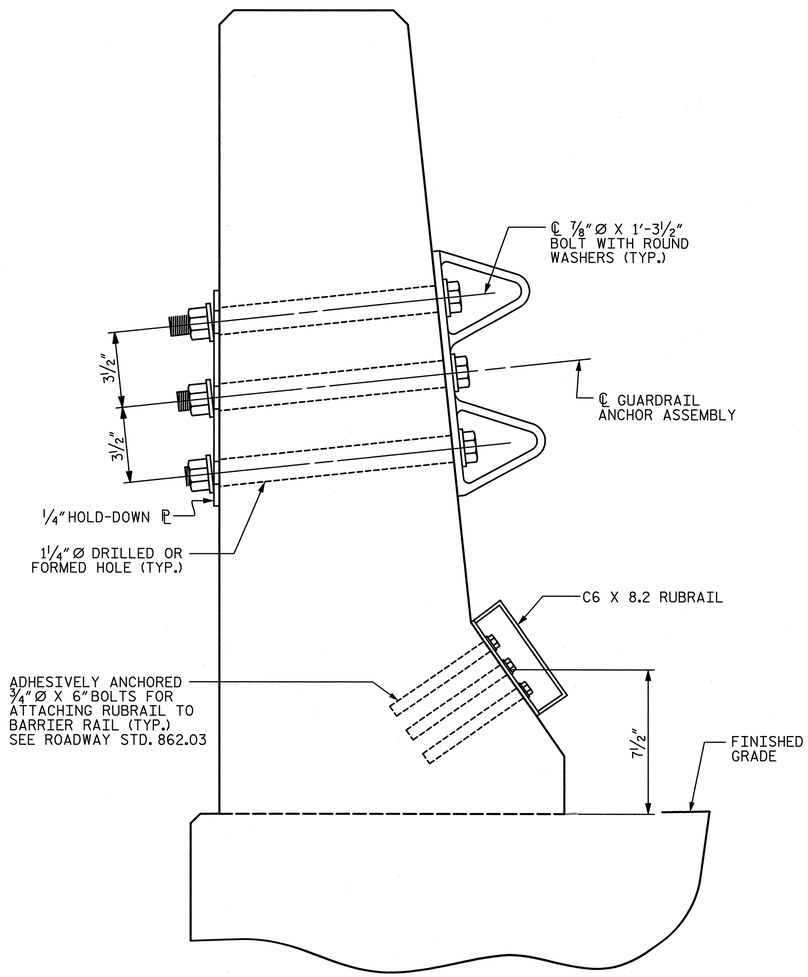

SECTION E-E

GUARDRAIL ANCHOR ASSEMBLY DETAILS

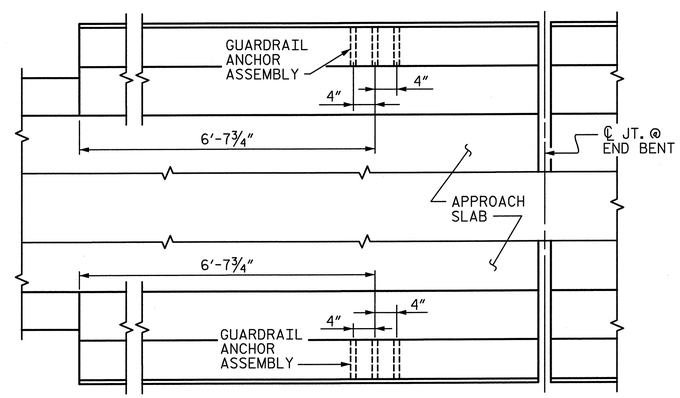

PLAN END BENT 1

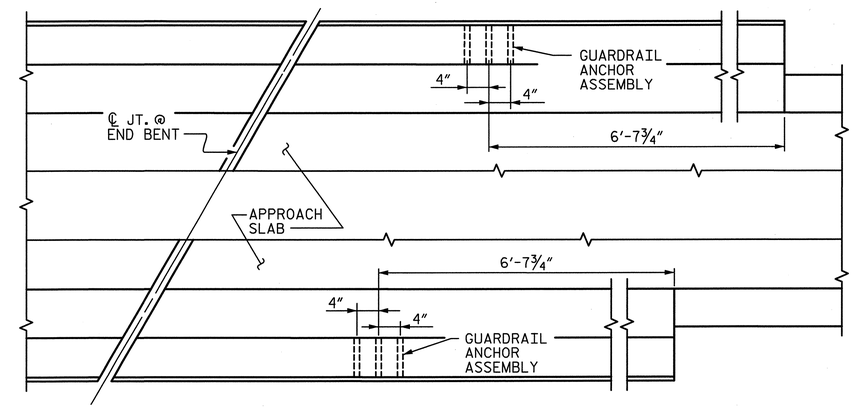

PLAN END BENT 2

LOCATION OF ANCHORS FOR GUARDRAIL

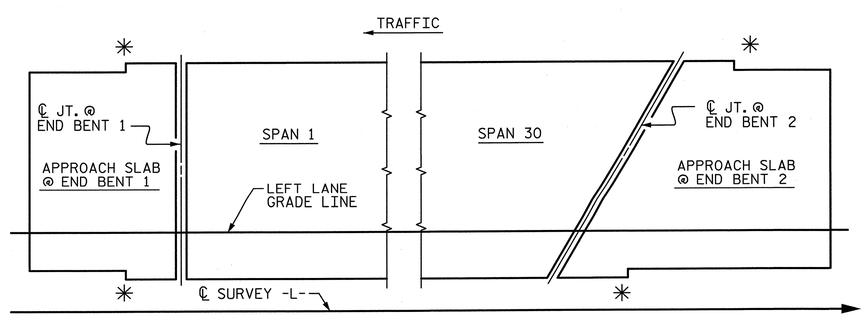

SKETCH SHOWING POINTS OF ATTACHMENTS

✳ DENOTES GUARDRAIL ANCHOR ASSEMBLY

PROJECT NO. U-2524C

GUILFORD COUNTY

STATION: POT 407+73.35 -L-
= POT 29+32.06 -Y4-

STATE OF NORTH CAROLINA
DEPARTMENT OF TRANSPORTATION
RALEIGH

GUARDRAIL ANCHORAGE FOR BARRIER RAIL

-LEFT LANE-

NORTH CAROLINA PROFESSIONAL SEAL 28479 ENGINEER KEVIN G. BAILEY 5-30-13

STV / Ralph Whitehead Associates, Inc.
1000 West Morehead St., Ste. 200
Charlotte, NC 28208
NC License No. F-0991

REVISIONS								SHEET NO.
NO.	BY:	DATE:	NO.	BY:	DATE:			S-157
1			3					TOTAL SHEETS
2			4					83

DRAWN BY : KMG	DATE : 12-12	DESIGN ENGINEER OF RECORD: P. KELLY	DATE : 5-13
CHECKED BY : AR	DATE : 12-12		

5/30/2013 4:59:00 PM R:\ustation\Finals\Guardrail Attachment.dgn

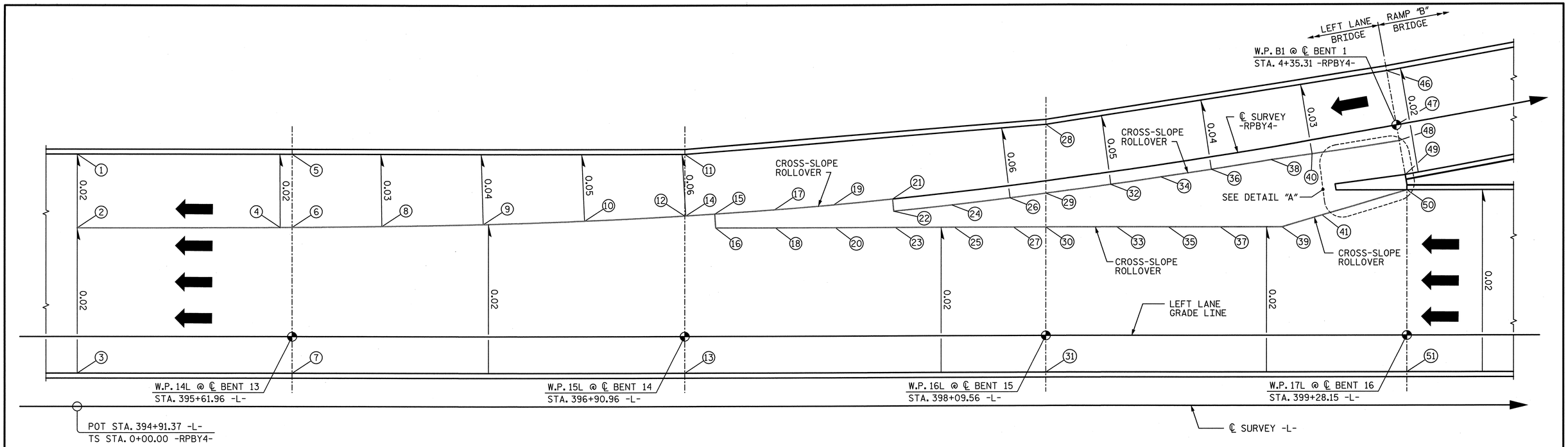

PLAN

POINT	GRADE LINE	STATION	OFFSET* (FT)	TOP OF SLAB ELEVATION (FT)
1	-RPBY4-	0+00.00	24.000 LT.	794.020
2	-RPBY4-	0+00.00	0.000	794.500
3	-L-	394+91.37	12.000 RT.	795.463
4	-RPBY4-	0+66.66	0.000	794.167
5	-RPBY4-	0+70.77	23.830 LT.	793.636
6	-RPBY4-	0+70.59	0.000	794.143
7	-L-	395+61.96	12.000 RT.	795.110
8	-RPBY4-	1+00.06	0.000	793.990
9	-RPBY4-	1+33.39	0.000	793.816
10	-RPBY4-	1+66.70	0.000	793.640
11	-RPBY4-	2+00.85	20.060 LT.	792.248
12	-RPBY4-	1+96.66	0.000	793.462
13	-L-	396+90.96	12.000 RT.	794.465
14	-RPBY4-	2+00.00	0.000	793.460
15	-RPBY4-	2+09.54	0.000	793.367
16	-L-	397+01.11	36.000 LT.	793.454
17	-RPBY4-	2+29.10	0.000	793.175
18	-L-	397+20.77	36.000 LT.	793.356
19	-RPBY4-	2+48.62	0.000	792.984
20	-L-	397+40.44	36.000 LT.	793.258
21	-RPBY4-	2+68.10	0.000	792.812
22	-RPBY4-	2+68.10	4.000 RT.	793.052
23	-L-	397+60.11	36.000 LT.	793.159
24	-RPBY4-	2+87.29	4.000 RT.	792.860
25	-L-	397+79.52	36.000 LT.	793.062
26	-RPBY4-	3+06.44	4.000 RT.	792.644
27	-L-	397+98.93	36.000 LT.	792.965

* OFFSET FROM GRADE LINE

POINT	GRADE LINE	STATION	OFFSET* (FT)	TOP OF SLAB ELEVATION (FT)
28	-RPBY4-	3+21.16	18.052 LT.	791.219
29	-RPBY4-	3+18.29	4.000 RT.	792.485
30	-L-	398+09.56	36.000 LT.	792.912
31	-L-	398+09.56	12.000 RT.	793.872
32	-RPBY4-	3+39.76	4.000 RT.	792.171
33	-L-	398+32.83	36.000 LT.	792.796
34	-RPBY4-	3+56.44	4.000 RT.	791.906
35	-L-	398+49.83	36.000 LT.	792.711
36	-RPBY4-	3+73.09	4.000 RT.	791.623
37	-L-	398+66.83	36.000 LT.	792.626
38	-RPBY4-	3+92.99	4.000 RT.	791.261
39	-L-	398+87.15	36.000 LT.	792.524
40	-RPBY4-	4+06.47	4.356 RT.	791.012
41	-L-	399+00.29	39.850 LT.	792.382
42A	-RPBY4-	4+09.63	4.440 RT.	790.951
42B	-RPBY4-	4+10.08	4.452 RT.	790.943
42C	-RPBY4-	4+15.26	4.590 RT.	790.842
42D	-RPBY4-	4+20.45	4.728 RT.	790.738
42E	-RPBY4-	4+25.64	4.867 RT.	790.632
42F	-RPBY4-	4+30.83	5.005 RT.	790.524
43A	-RPBY4-	4+09.63	15.150 RT.	791.708
43B	-RPBY4-	4+10.08	15.169 RT.	791.691
43C	-RPBY4-	4+15.26	15.375 RT.	791.487
43D	-RPBY4-	4+20.45	15.587 RT.	791.280
43E	-RPBY4-	4+25.64	15.807 RT.	791.069
43F	-RPBY4-	4+30.83	16.028 RT.	790.853
44A	-L-	399+02.13	48.138 LT.	791.818

* OFFSET FROM GRADE LINE

POINT	GRADE LINE	STATION	OFFSET* (FT)	TOP OF SLAB ELEVATION (FT)
44B	-L-	399+02.58	48.162 LT.	791.828
44C	-L-	399+07.81	48.436 LT.	791.919
44D	-L-	399+13.05	48.711 LT.	791.987
44E	-L-	399+18.30	48.986 LT.	792.030
44F	-L-	399+23.54	49.260 LT.	792.049
45A	-L-	399+03.37	40.747 LT.	792.348
45B	-L-	399+03.80	40.874 LT.	792.344
45C	-L-	399+08.85	42.350 LT.	792.289
45D	-L-	399+13.89	43.827 LT.	792.234
45E	-L-	399+18.93	45.302 LT.	792.179
45F	-L-	399+23.97	46.777 LT.	792.124
46	-RPBY4-	4+35.17	18.011 LT.	789.937
47	-RPBY4-	4+35.31	0.000	790.319
48	-RPBY4-	4+35.34	5.126 RT.	790.427
49	-RPBY4-	4+35.43	16.239 RT.	790.662
50	-L-	399+28.15	48.000 LT.	792.079
51	-L-	399+28.15	12.000 RT.	793.279

* OFFSET FROM GRADE LINE

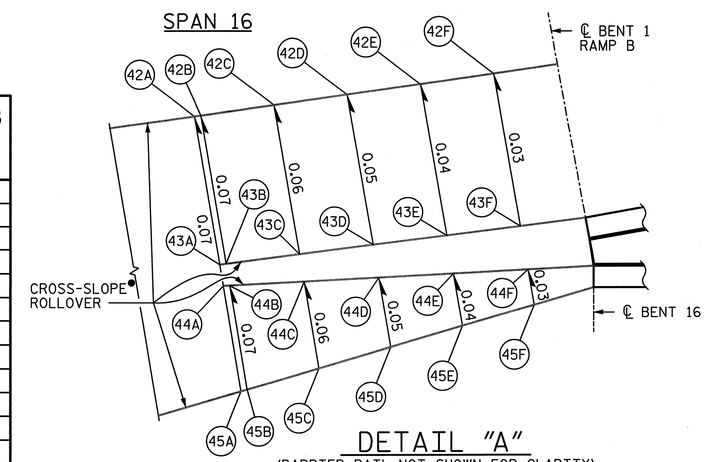

DETAIL "A"

(BARRIER RAIL NOT SHOWN FOR CLARITY)

• CROSS-SLOPE ROLLOVER OCCURS UNDER THE BARRIER RAIL. SEE NOTE 1 FOR ADDITIONAL BARRIER RAIL DETAILS.

NOTES:

1. FOR CONCRETE BARRIER RAIL, SEE "PLAN OF RAILS CONCRETE BARRIER RAIL TRANSITION ZONE DETAILS" SHEET.

PROJECT NO. U-2524C
GUILFORD COUNTY
STATION: POT 407+73.35 -L-
= POT 29+32.06 -Y4-

SHEET 1 OF 2

NORTH CAROLINA PROFESSIONAL SEAL 28479 ENGINEER KEVIN G. BAILEY 5-30-13

STATE OF NORTH CAROLINA
DEPARTMENT OF TRANSPORTATION
RALEIGH

TRANSITION ZONE DETAILS

-LEFT LANE-

STV / Ralph Whitehead Associates, Inc.
1000 West Morehead St., Ste. 200
Charlotte, NC 28208
NC License No. F-0991

REVISIONS							SHEET NO.
NO.	BY:	DATE:	NO.	BY:	DATE:		S-158
1			3				TOTAL SHEETS
2			4				83

DRAWN BY : VMW DATE : 8-12
CHECKED BY : TJT DATE : 2-13
DESIGN ENGINEER OF RECORD: T. TOWNSEND DATE : 5-13

5/30/2013 4:59:05 PM R:\ustation\Finals\Transition Zone Details Sheet 1 of 2.dgn

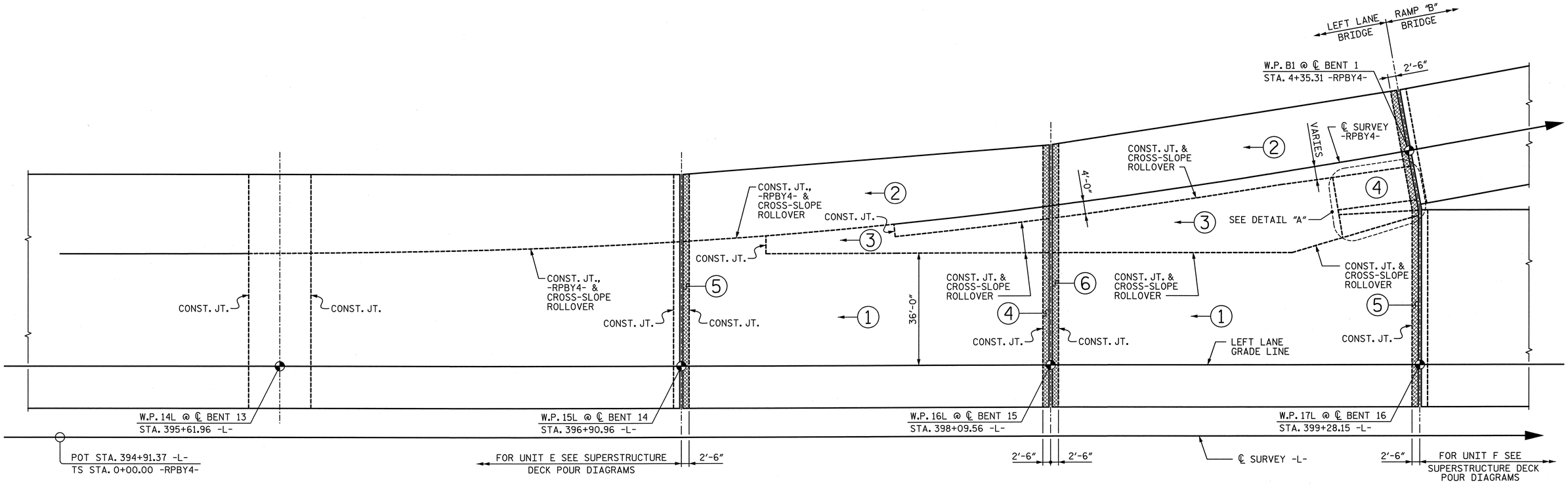

DECK POUR SEQUENCE PLAN

(BARRIER RAIL NOT SHOWN FOR CLARITY)

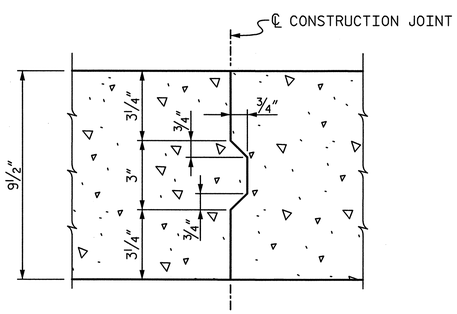

NOTE: REINFORCING STEEL IN SLAB NOT SHOWN. LONGITUDINAL REINFORCING STEEL SHALL BE CONTINUOUS THROUGH JOINT.

CONSTRUCTION JOINT DETAIL

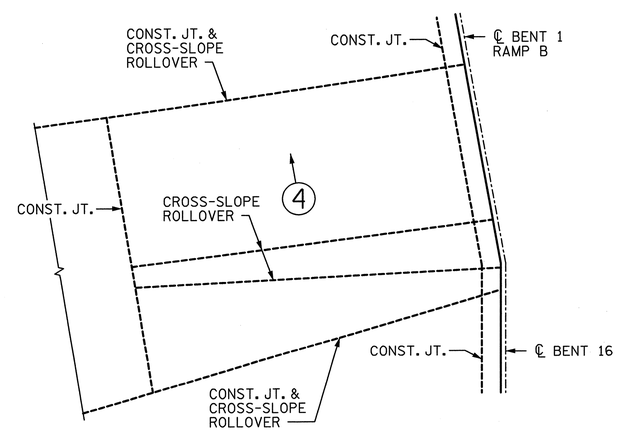

DETAIL "A"

NOTES:

1. FOR NOTES AND POUR CONCRETE QUANTITIES, SEE "SUPERSTRUCTURE DECK POUR DIAGRAMS" SHEETS.
2. SPAN 16 POUR 4 SHALL BE HAND SCREEDED.

LEGEND:

DECK CLOSURE POUR AT JOINTS

POUR NUMBER

DIRECTION OF POUR

PROJECT NO. U-2524C

GUILFORD COUNTY

STATION: POT 407+73.35 -L-
= POT 29+32.06 -Y4-

SHEET 2 OF 2

STATE OF NORTH CAROLINA
DEPARTMENT OF TRANSPORTATION
RALEIGH

TRANSITION ZONE DETAILS

-LEFT LANE-

NORTH CAROLINA PROFESSIONAL SEAL 28479 ENGINEER KEVIN G. BAILEY 5-30-13

DRAWN BY : VMW	DATE : 8-12	DESIGN ENGINEER OF RECORD: T. TOWNSEND	DATE : 5-13
CHECKED BY : TJT	DATE : 2-13		

STV/ Ralph Whitehead Associates, Inc.
1000 West Morehead St., Ste. 200
Charlotte, NC 28208
NC License No. F-0991

REVISIONS										SHEET NO.
NO.	BY:	DATE:	NO.	BY:	DATE:	NO.	BY:	DATE:	NO.	S-159
1			3							TOTAL SHEETS
2			4							836

5/30/2013 4:59:10 PM R:\ustation\Finals\Transition Zone Details Sheet 2 of 2.dgn

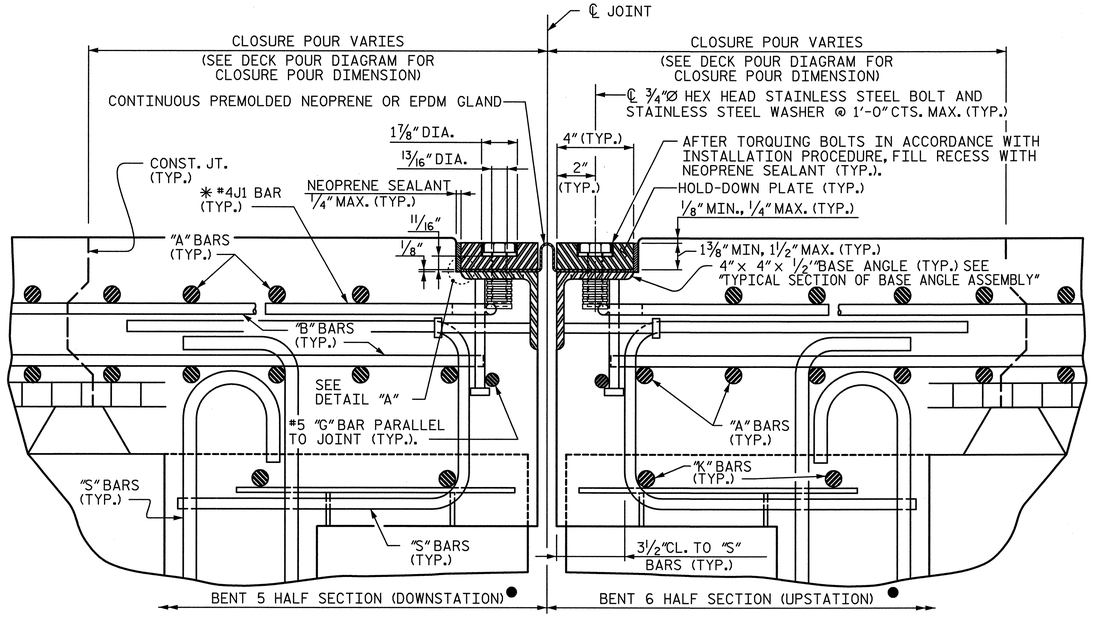

EXPANSION JOINT DETAILS

(DETAILS SHOWN FOR END BENT 1, BENTS 2, 8, 14, 15, 16 AND END BENT 2)
(SECTION NORMAL TO JOINT -- PRESTRESSED GIRDER SUPERSTRUCTURE)

* THE QUANTITY OF #4 J1 BARS ON THE BILL OF MATERIAL IS BASED ON 1'-0" CENTERS. J1 BARS SHALL BE PLACED AT EACH VERTICAL STUD ANCHOR BOLT. IN THE EVENT THAT THE NUMBER OF VERTICAL STUD ANCHORS EXCEEDS THE NUMBER OF J1 BARS SPECIFIED, ADDITIONAL J1 BARS WILL NOT BE REQUIRED.

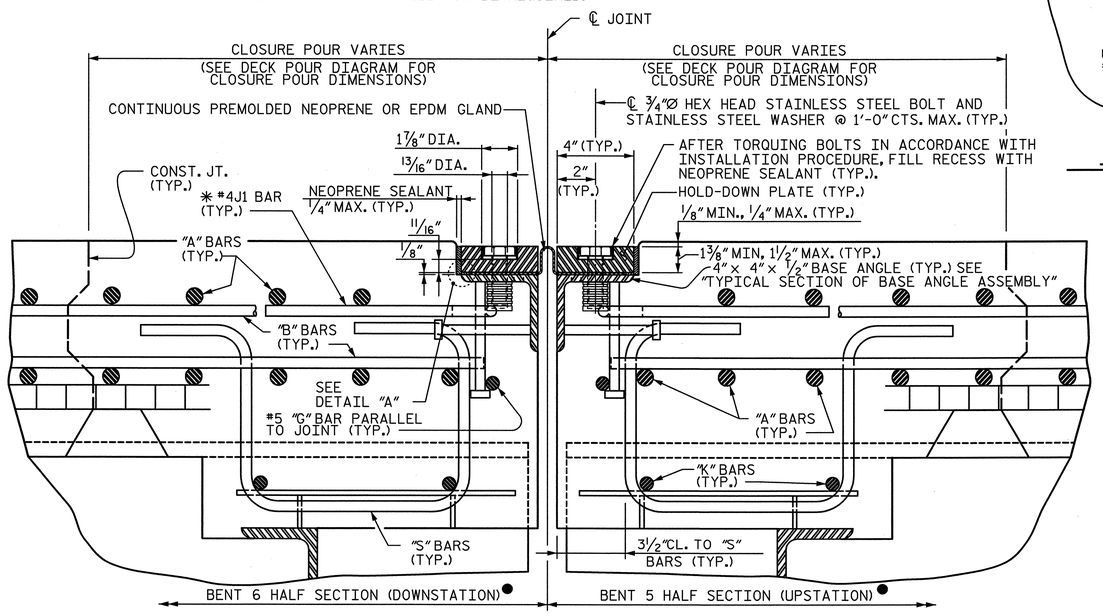

EXPANSION JOINT DETAILS

(DETAILS SHOWN FOR BENT 24)
(SECTION NORMAL TO JOINT -- STEEL SUPERSTRUCTURE)

* THE QUANTITY OF #4 J1 BARS ON THE BILL OF MATERIAL IS BASED ON 1'-0" CENTERS. J1 BARS SHALL BE PLACED AT EACH VERTICAL STUD ANCHOR BOLT. IN THE EVENT THAT THE NUMBER OF VERTICAL STUD ANCHORS EXCEEDS THE NUMBER OF J1 BARS SPECIFIED, ADDITIONAL J1 BARS WILL NOT BE REQUIRED.

● AT BENTS 5 AND 6, A COMBINATION OF THE PRESTRESSED GIRDER SUPERSTRUCTURE AND STEEL SUPERSTRUCTURE WILL BE USED.

INSTALLATION PROCEDURE

1. A TEMPLATE OR OTHER SUITABLE DEVICE SHALL BE USED TO FORM THE TOP OF THE EXPANSION JOINT SEAL BLOCKOUT TO THE PROPER DEPTH AND WIDTH. THE TEMPLATE SHALL BE 4⅛" TO 4¼" WIDE AND OF SUCH THICKNESS AS TO PROVIDE FOR CORRECT FINAL ELEVATION OF TOP OF HOLD-DOWN PLATES. THE TEMPLATE SHALL BE ATTACHED TO THE BASE ANGLE ASSEMBLY WITH THE ¾"Ø HEX HEAD BOLTS PROVIDED FOR THE HOLD-DOWN PLATES. A 1"Ø HOLE SHALL BE PROVIDED IN THE TEMPLATE CENTERED OVER EACH WEEP HOLE IN THE 4" X 4" X ½" BASE ANGLE. OTHER METHODS OF INSURING DRAINAGE THROUGH WEEP HOLES MAY BE EMPLOYED SUBJECT TO ENGINEER'S APPROVAL.
2. AFTER THE CONCRETE HAS BEEN CAST ON BOTH SIDES OF THE JOINT, REMOVE THE TEMPLATE. THOROUGHLY CLEAN THE BOLT HOLES AND THE ANGLE PLATE. REMOVE ANY EXCESS CONCRETE THAT COMES OUT OF THE WEEP HOLES. ANY DAMAGED STEEL SHALL BE COATED WITH A MINIMUM THICKNESS OF 4 DRY MILS OF ZINC-RICH PAINT IN ACCORDANCE WITH THE STANDARD SPECIFICATIONS.
3. LAY THE GLAND ON THE BASE ANGLE AND FIELD MARK THE GLAND FOR THE BOLT HOLES. HOLES IN THE GLAND SHALL BE PUNCHED ⅞" IN DIAMETER WITH A HAND PUNCH.
4. IN ORDER TO CHECK FOR PROPER ALIGNMENT, PLACE THE GLAND AND HOLD-DOWN PLATES ON THE BASE ANGLE. DO NOT APPLY NEOPRENE SEALANT. BOLT THE HOLD-DOWN PLATES TO THE BASE ANGLE BUT DO NOT TIGHTEN. THE ENGINEER SHALL INSPECT THE JOINT SEAL DEVICE FOR PROPER ALIGNMENT.
5. AFTER INSPECTION, REMOVE THE HOLD-DOWN PLATES AND GLAND. APPLY NEOPRENE SEALANT TO THE BASE ANGLE IN ACCORDANCE WITH THE "INSTALLATION SKETCH". PLACE GLAND AND HOLD-DOWN PLATES ON THE BASE ANGLE. BOLT THE HOLD-DOWN PLATES TO THE BASE ANGLE ASSEMBLY AND TORQUE THE BOLTS TO 88 FT-LBS WITH A TORQUE WRENCH. CHECK THE TORQUE AFTER THREE (3) HOURS AND, IF NECESSARY, RETIGHTEN TO 88 FT-LBS. A FINAL CHECK SHALL BE MADE AT SEVEN (7) DAYS. TORQUE SHALL NOT BE LESS THAN 80 FT-LBS AFTER SEVEN (7) DAYS.
6. AFTER PROPER TORQUING, CLEAN THE BOLT HOLE RECESSES AND THE RECESS BETWEEN THE JOINT SEAL DEVICE AND CONCRETE, COMPLETELY FILL THESE RECESSES WITH NEOPRENE SEALANT.

NOTES:

1. FOR EXPANSION JOINT SEALS, SEE SPECIAL PROVISIONS.
2. ALL PLATES AND ANGLES SHALL CONFORM TO AASHTO M270 GRADE 36 STEEL OR APPROVED EQUAL. ALL HOLD-DOWN BOLTS SHALL CONFORM TO ASTM F593 ALLOY 304 STAINLESS STEEL AND WASHERS SHALL CONFORM TO ASTM F844 EXCEPT THEY SHALL BE MADE FROM ALLOY 304 STAINLESS STEEL. ALL STUD ANCHORS SHALL CONFORM TO AASHTO M169, GRADES 1010 THRU 1020 OR APPROVED EQUAL. ALL CONCRETE INSERTS SHALL BE CLOSED END AND SHALL CONFORM TO AASHTO M169, GRADE 12L14. TENSILE CAPACITY SHALL BE 3000 LBS. MIN.
3. A PREMOLDED CORRUGATED OR NON-CORRUGATED GLAND SHALL BE USED FOR JOINTS SKEWED BETWEEN 50° THRU 130°. FOR JOINTS SKEWED LESS THAN 50° OR MORE THAN 130°, ONLY A CORRUGATED GLAND SHALL BE USED.
4. CLOSED END FERRULES AND STUD ANCHORS SHALL BE SHOP WELDED AND ALL HOLES SHALL BE SHOP DRILLED AS SHOWN ON PLANS. STUD ANCHORS SHALL BE ELECTRIC ARC END WELDED WITH COMPLETE FUSION.
5. SURFACES COMING IN CONTACT WITH NEOPRENE SHALL BE GROUND SMOOTH PRIOR TO METALLIZING.
6. UPON COMPLETION OF SHOP FABRICATION, THE HOLD DOWN PLATE AND BASE ANGLE ASSEMBLY, AS SHOWN IN THE "TYPICAL SECTION OF BASE ANGLE ASSEMBLY", SHALL BE METALLIZED. SEE SPECIAL PROVISION FOR THERMAL SPRAYED COATINGS (METALLIZATION).
7. BASE ANGLE ASSEMBLY SHALL BE CONTINUOUS FOR THE LENGTH OF THE JOINT. AT CROWN BREAKS, THE ENDS OF THE BASE ANGLE ASSEMBLY SHALL BE CUT PARALLEL TO THE BRIDGE CENTERLINE FOR SKEWS LESS THAN 80° AND GREATER THAN 100°. FINISHED WELD SHALL BE GROUND SMOOTH AND COATED WITH A MINIMUM THICKNESS OF 4 DRY MILS OF ZINC-RICH PAINT IN ACCORDANCE WITH THE STANDARD SPECIFICATIONS.
8. FIELD SPLICES OF HOLD-DOWN PLATES SHALL BE KEPT TO A MINIMUM. CONTRACTOR SHALL FURNISH DETAILED PLANS SHOWING PROPOSED SPLICE LOCATIONS FOR APPROVAL. HOLD-DOWN PLATES SHALL NOT EXCEED 20' LENGTHS UNLESS APPROVED BY THE ENGINEER.
9. NO ALTERNATE JOINT DETAILS SHALL BE PERMITTED IN LIEU OF THOSE SHOWN ON THESE PLANS.
10. THE CONTRACTOR MAY, AT HIS OPTION, USE ADHESIVELY ANCHORED ANCHOR BOLTS IN PLACE OF CONCRETE INSERTS FOR COVER PLATES. THE YIELD LOAD OF THE ¾"Ø BOLT IS 10 KIPS. FIELD TESTING OF THE ADHESIVE BONDING SYSTEM IS NOT REQUIRED.

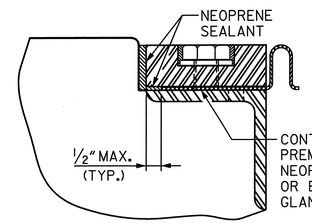

DETAIL "A"

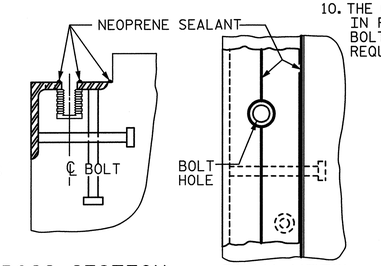

INSTALLATION SKETCH

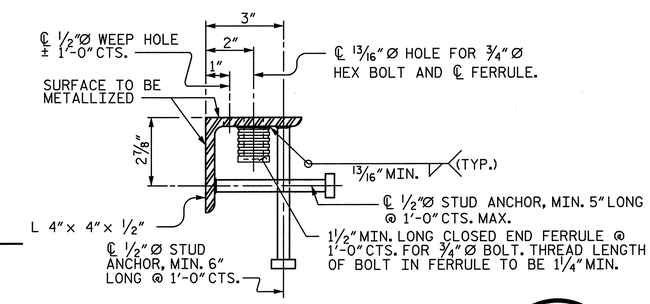

TYPICAL SECTION OF BASE ANGLE ASSEMBLY

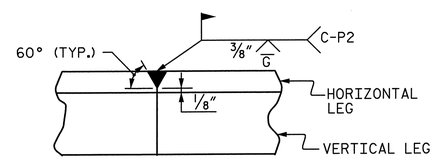

DETAIL- FIELD WELD SPLICE OF BASE ANGLE

NORTH CAROLINA PROFESSIONAL SEAL 28479 ENGINEER KEVIN G. BAILEY
5-30-13

MOVEMENT AND SETTING AT JOINT

BENT NO.	SKEW ANGLE	TOTAL MOVEMENT (ALONG ℄ RDWY.)	PERPENDICULAR JOINT OPENING AT 45°F	PERPENDICULAR JOINT OPENING AT 60°F	PERPENDICULAR JOINT OPENING AT 90°F
EB1	90°-00'-00"	⅝"	1⅜"	1 5/16"	1⅛"
B2	90°-00'-00"	1 11/16"	2"	1¾"	1¼"
B5	137°-20'-55"	¾"	1 7/16"	1 5/16"	1⅛"
B6	139°-56'-24"	1 13/16"	2⅛"	1⅞"	1 5/16"
B8	90°-00'-00"	1 13/16"	2⅛"	1 13/16"	1¼"
B14	90°-00'-00"	1 3/16"	1 11/16"	1 9/16"	1 3/16"
B15	90°-00'-00"	1 7/16"	1⅞"	1⅝"	1 3/16"
B16	90°-00'-00"	1½"	1⅞"	1 11/16"	1¼"
B24	129°-19'-40"	1⅜"	1⅞"	1 11/16"	1¼"
EB2	113°-11'-29"	1 3/16"	1¾"	1 9/16"	1 3/16"

PROJECT NO. U-2524C
GUILFORD COUNTY
STATION: POT 407+73.35 -L-
= POT 29+32.06 -Y4-

SHEET 1 OF 2

STATE OF NORTH CAROLINA
DEPARTMENT OF TRANSPORTATION
RALEIGH

EXPANSION JOINT SEAL DETAILS

-LEFT LANE-

REVISIONS						SHEET NO.
NO.	BY:	DATE:	NO.	BY:	DATE:	S-160
1			3			TOTAL SHEETS
2			4			836

STV / Ralph Whitehead Associates, Inc.
1000 West Morehead St., Ste. 200
Charlotte, NC 28208
NC License No. F-0991

DRAWN BY : VMW DATE : 5-13
CHECKED BY : TRL DATE : 5-13
DESIGN ENGINEER OF RECORD: K. BAILEY DATE : 5-13

5/30/2013 4:59:17 PM R:\ustation\Finals\Expansion Joint Details 1of 2.dgn

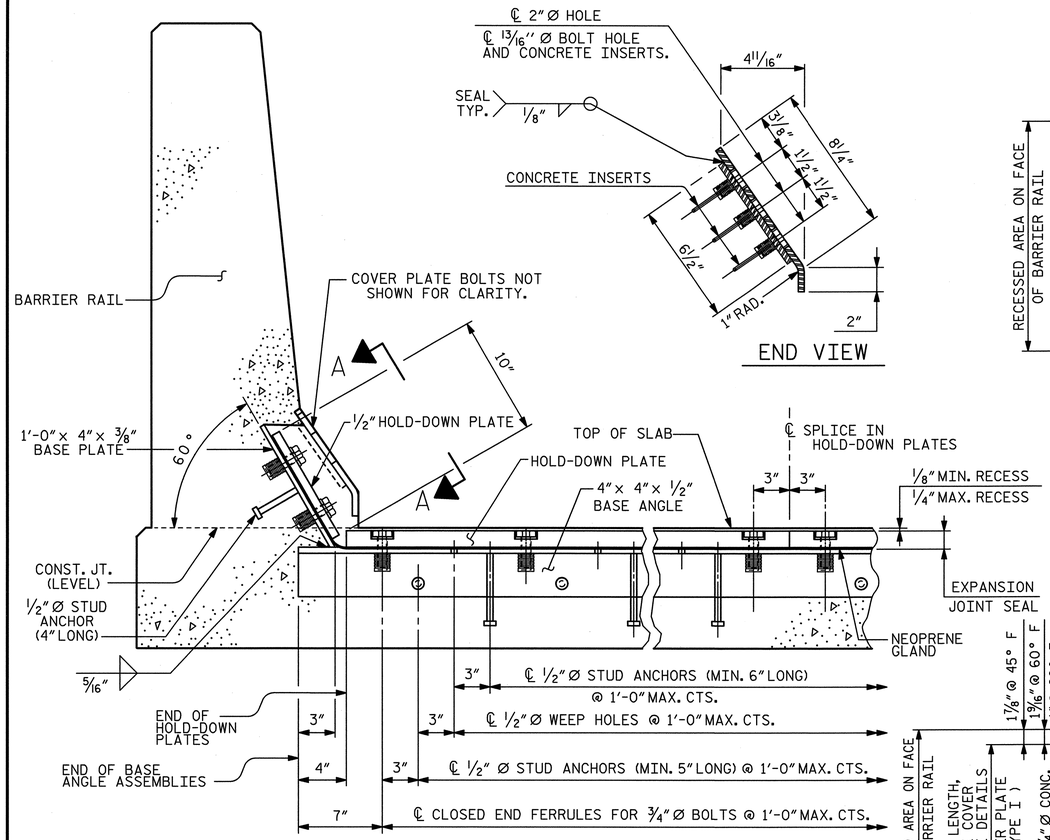

SECTION THRU RAIL NORMAL TO JOINT

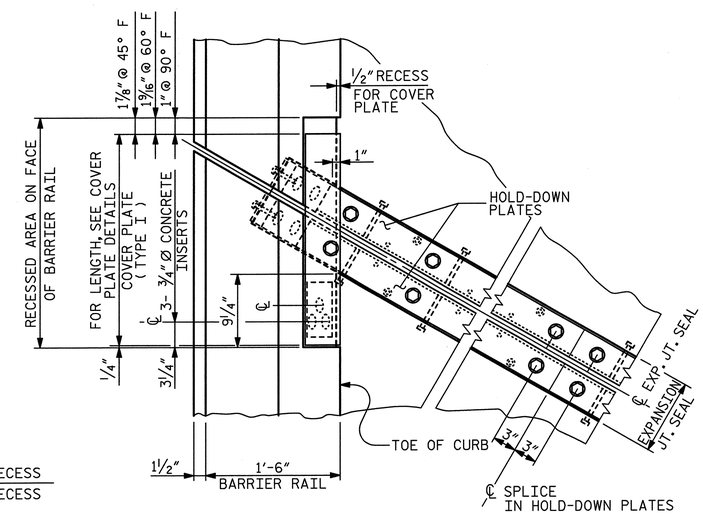

LEFT SIDE

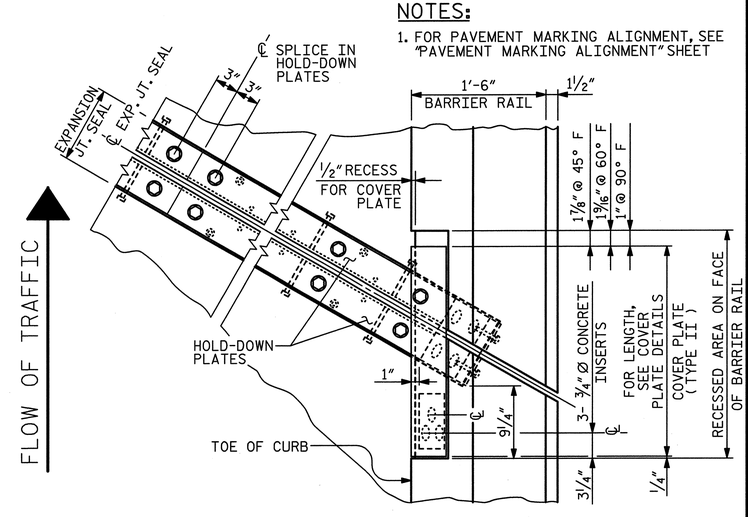

RIGHT SIDE

PLAN OF EXPANSION JOINT SEAL - BENT 6

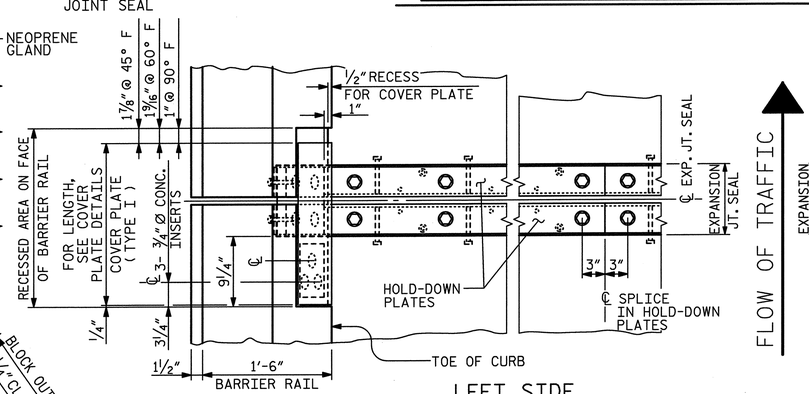

LEFT SIDE

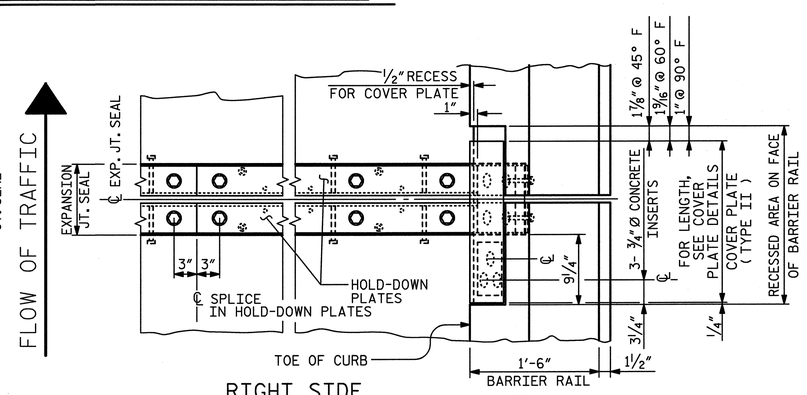

RIGHT SIDE

PLAN OF EXPANSION JOINT SEAL - BENT 8

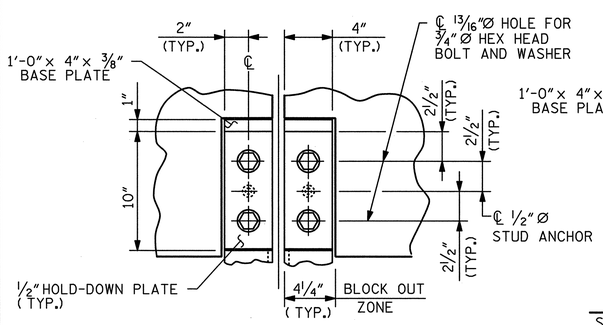

SECTION A - A

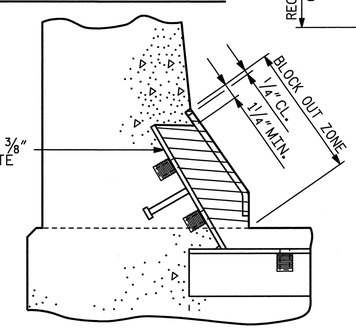

BLOCK OUT DETAIL

SEE "SECTION A - A" FOR OTHER DETAILS.

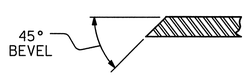

SECTION B - B

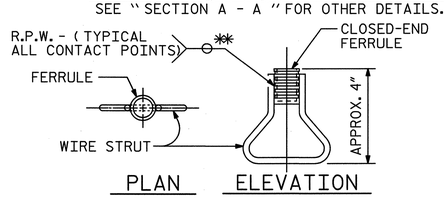

CONCRETE INSERT

** EACH WELDED ATTACHMENT OF WIRE TO FERRULE SHALL DEVELOP THE TENSILE STRENGTH OF THE WIRE.

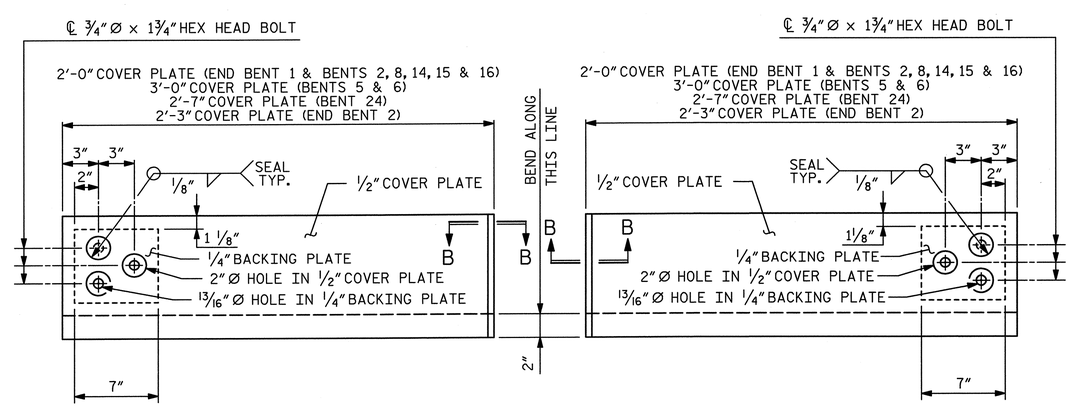

TYPE I - ELEVATION VIEW

TYPE II - ELEVATION VIEW

COVER PLATE DETAILS

NORTH CAROLINA PROFESSIONAL SEAL 28479 ENGINEER KEVIN G. BAILEY 5-30-13

PROJECT NO. U-2524C

GUILFORD COUNTY

STATION: POT 407+73.35 -L-
= POT 29+32.06 -Y4-

SHEET 2 OF 2

STATE OF NORTH CAROLINA
DEPARTMENT OF TRANSPORTATION
RALEIGH

EXPANSION JOINT SEAL DETAILS FOR BARRIER RAIL

-LEFT LANE-

REVISIONS							
NO.	BY:	DATE:	NO.	BY:	DATE:		
1			3				
2			4				

SHEET NO. S-161

TOTAL SHEETS 83

STV / Ralph Whitehead Associates, Inc.
1000 West Morehead St., Ste. 200
Charlotte, NC 28208
NC License No. F-0991

DRAWN BY : KMG DATE : 12-12
CHECKED BY : AR DATE : 12-12
DESIGN ENGINEER OF RECORD: K. BAILEY DATE : 5-13

5/30/2013 4:59:24 PM R:\ustation\Finals\Expansion Joint Details 2 of 2.dgn

MOVEMENT AND SETTING AT JOINT

BENT NO.	*SKEW ANGLE	TOTAL MOVEMENT (ALONG ℄ RDWY.)	PERPENDICULAR JOINT OPENING AT 45°F ("A")	PERPENDICULAR JOINT OPENING AT 60°F ("B")	PERPENDICULAR JOINT OPENING AT 90°F ("C")	COVER PLATE OPENING AT 45°F ("D")	COVER PLATE OPENING AT 60°F ("E")	COVER PLATE OPENING AT 90°F ("F")
B11	90°-00'-00"	2 3/8"	8 9/16"	8 1/8"	7 5/16"	3 9/16"	3 1/8"	2 5/16"
B20	90°-00'-00"	4 1/4"	8 13/16"	8 1/8"	6 3/4"	3 13/16"	3 1/8"	1 3/4"
B23	90°-00'-00"	4 1/4"	8 3/4"	8 1/8"	6 7/8"	3 3/4"	3 1/8"	1 7/8"
B26	123°-06'-11"	2 9/16"	8 9/16"	8 1/8"	7 5/16"	3 5/8"	3 1/8"	2 1/8"

* SKEW ANGLE AT BENTS IN HORIZONTAL CURVES ARE GIVEN TANGENT TO THE CURVE

NOTES:

1. FOR MODULAR EXPANSION JOINT SEALS, SEE SPECIAL PROVISIONS.
2. THE STEEL PLATES SHALL CONFORM TO AASHTO M270 GRADE 36 OR APPROVED EQUAL AND BE PAINTED IN ACCORDANCE WITH THE STANDARD SPECIFICATIONS. AT THE CONTRACTOR'S OPTION, THE PLATES MAY BE METALLIZED AFTER FABRICATION. SEE SPECIAL PROVISIONS FOR THERMAL SPRAYED COATINGS (METALLIZATION).
3. THE 3/4" Ø HEX HEAD BOLTS SHALL CONFORM TO ASTM F593 ALLOY 304 STAINLESS STEEL.
4. THE 3/4" CONCRETE INSERTS SHALL BE CLOSED-END FERRULES WITH LOOPED WIRE STRUTS ATTACHED TO THEM. THE INSERTS SHALL CONFORM TO AASHTO M169, GRADE 12L14 AND SHALL HAVE A TENSILE WORKING LOAD CAPACITY OF 3000 LBS.
5. NO SEPARATE PAYMENT WILL BE MADE FOR FURNISHING AND INSTALLING THE COVER PLATE. THE ENTIRE COST OF THIS WORK SHALL BE INCLUDED IN THE LUMP SUM PRICE FOR "MODULAR EXPANSION JOINT SEALS".
6. COVER PLATE LENGTH IS BASED A BLOCKOUT WIDTH OF 1'-3". CONTRACTOR SHALL ADJUST PLATE LENGTH FOR ACTUAL BLOCKOUT LENGTH USED.

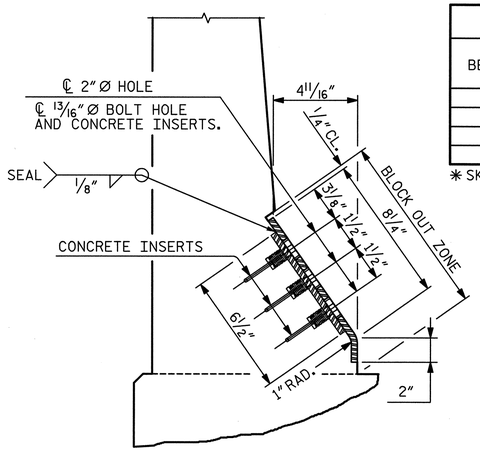

END VIEW

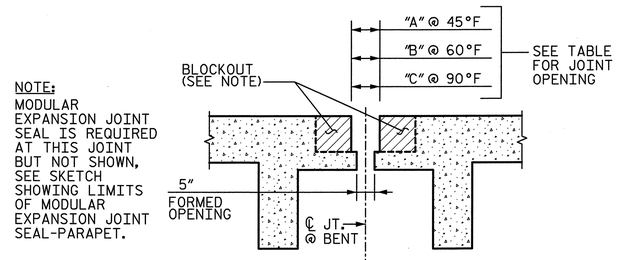

NOTE:
MODULAR EXPANSION JOINT SEAL IS REQUIRED AT THIS JOINT BUT NOT SHOWN, SEE SKETCH SHOWING LIMITS OF MODULAR EXPANSION JOINT SEAL-PARAPET.

SECTION THRU SLAB
(NORMAL TO JOINT)

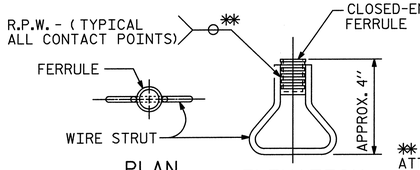

CONCRETE INSERT

** EACH WELDED ATTACHMENT OF WIRE TO FERRULE SHALL DEVELOP THE TENSILE STRENGTH OF THE WIRE.

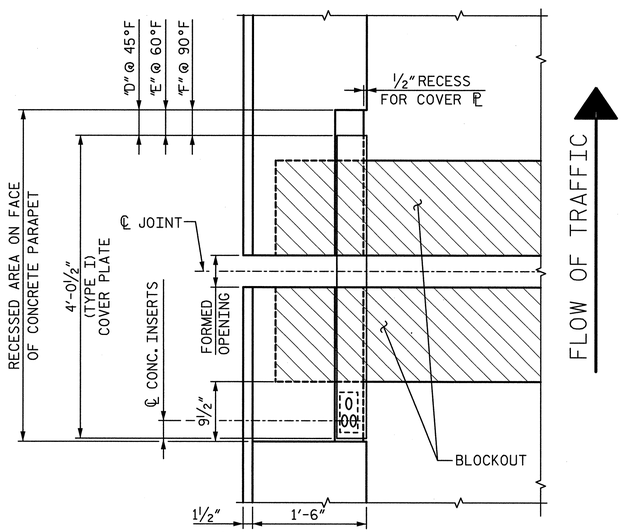

LEFT SIDE

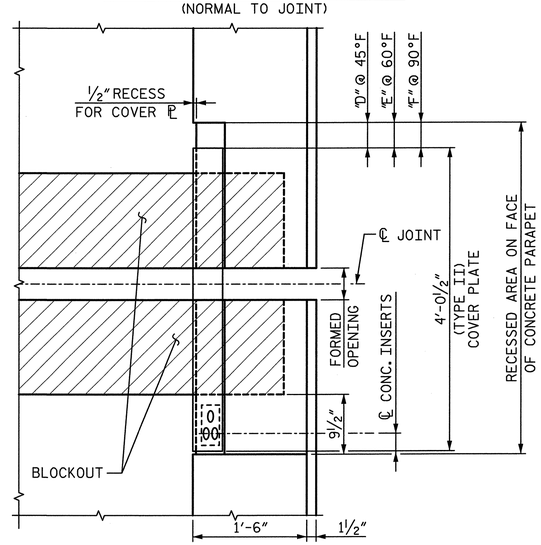

RIGHT SIDE

PLAN OF MODULAR EXPANSION JOINT SEAL - BENTS 11, 20, & 23

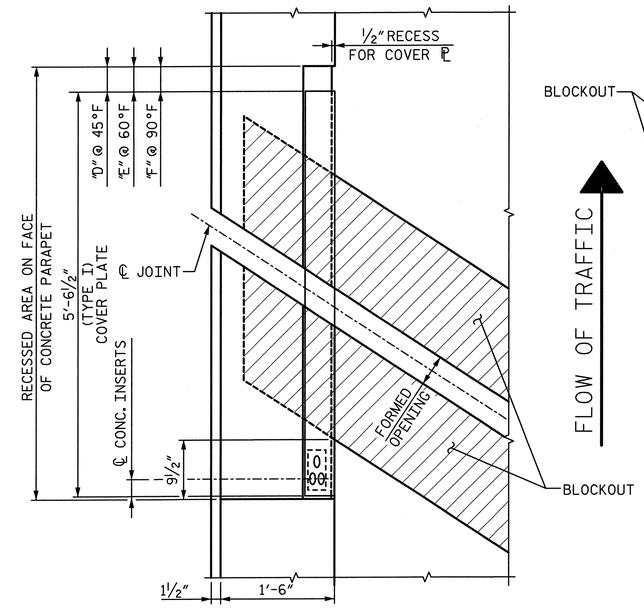

LEFT SIDE

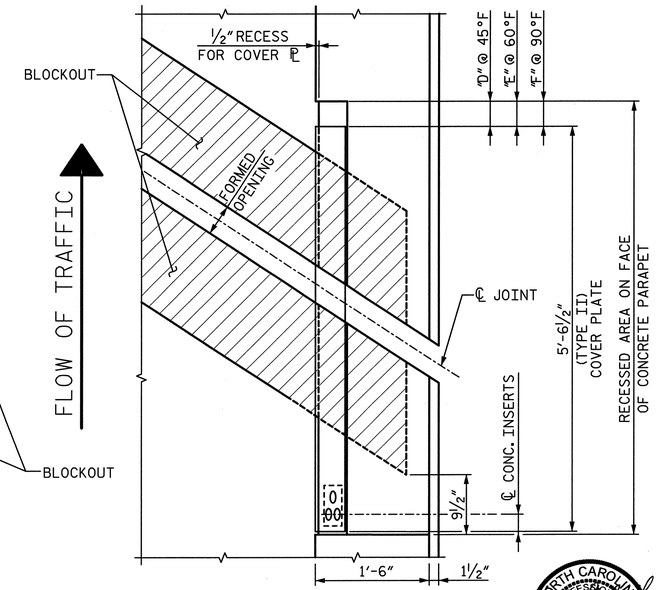

RIGHT SIDE

PLAN OF MODULAR EXPANSION JOINT SEAL - BENT 26

NORTH CAROLINA PROFESSIONAL ENGINEER SEAL 28479 KEVIN G. BAILEY 5-30-13

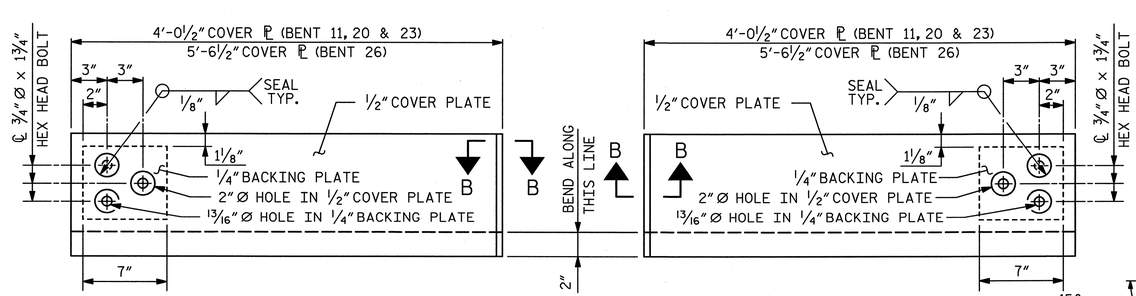

TYPE I - ELEVATION VIEW

TYPE II - ELEVATION VIEW

COVER PLATE DETAILS

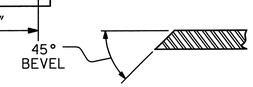

SECTION B-B

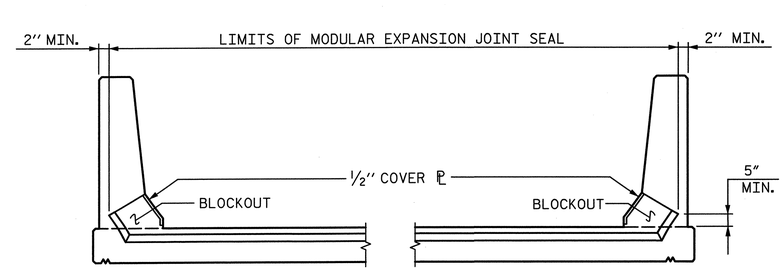

SKETCH SHOWING LIMITS OF MODULAR EXPANSION JOINT SEAL-BARRIER RAIL

PROJECT NO. U-2524C
GUILFORD COUNTY
STATION: POT 407+73.35 -L-
= POT 29+32.06 -Y4-

STATE OF NORTH CAROLINA
DEPARTMENT OF TRANSPORTATION
RALEIGH

MODULAR EXPANSION JOINT SEAL DETAILS FOR BARRIER RAIL

-LEFT LANE-

REVISIONS								SHEET NO.
NO.	BY:	DATE:	NO.	BY:	DATE:			S-162
1			3					TOTAL SHEETS
2			4					83

DRAWN BY : KMG DATE : 12-12
CHECKED BY : AR DATE : 12-12
DESIGN ENGINEER OF RECORD: K. BAILEY DATE : 5-13

STV / Ralph Whitehead Associates, Inc.
1000 West Morehead St., Ste. 200
Charlotte, NC 28208
NC License No. F-0991

R:\ustation\Finals\Modular Joint Details.dgn 4:59:29 PM 5/30/2013

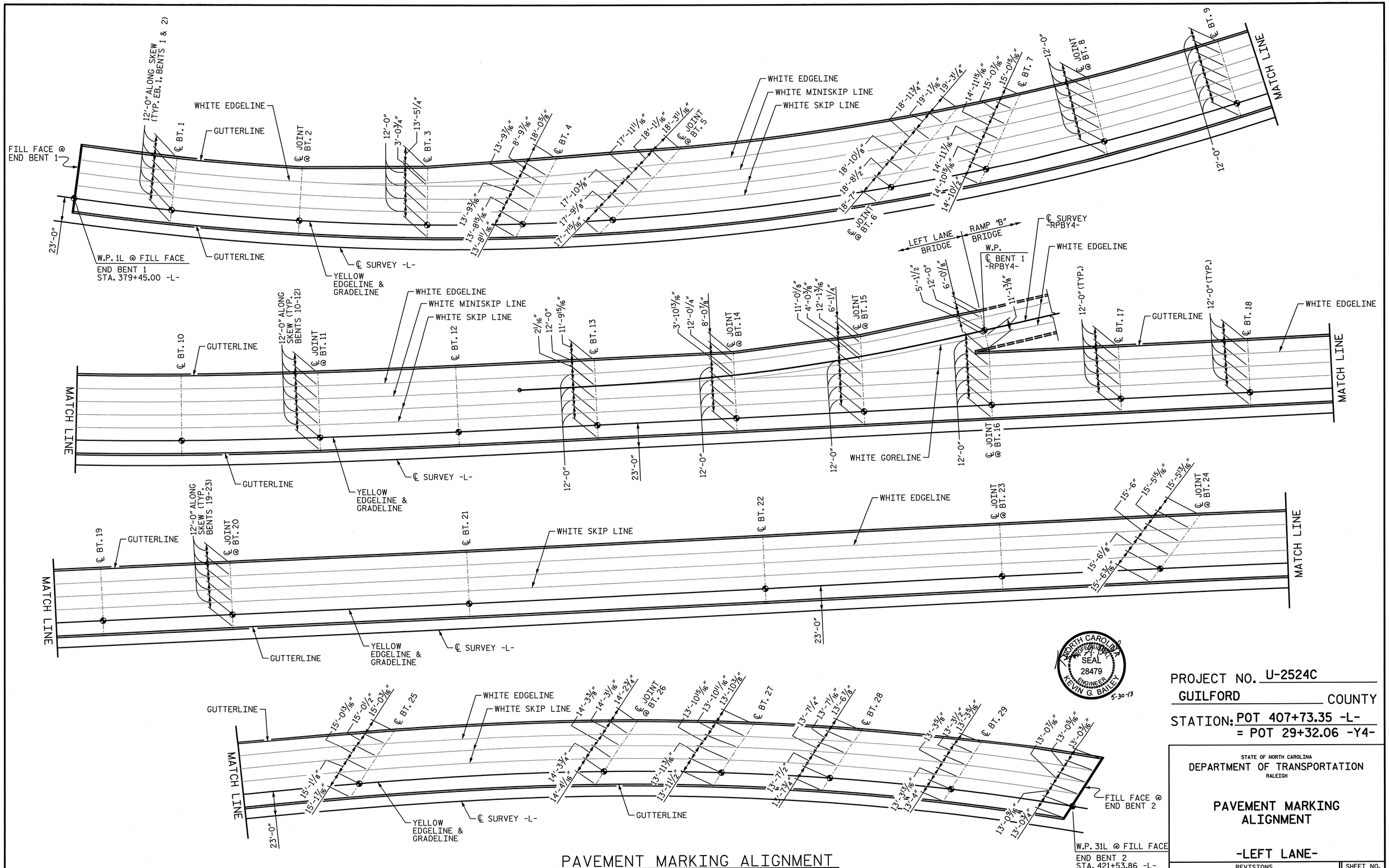

PAVEMENT MARKING ALIGNMENT

NORTH CAROLINA PROFESSIONAL SEAL 28479 ENGINEER KEVIN G. BAILEY 5-30-13

PROJECT NO. U-2524C

GUILFORD COUNTY

STATION: POT 407+73.35 -L-
= POT 29+32.06 -Y4-

STATE OF NORTH CAROLINA
DEPARTMENT OF TRANSPORTATION
RALEIGH

PAVEMENT MARKING ALIGNMENT

-LEFT LANE-

REVISIONS						SHEET NO.
NO.	BY:	DATE:	NO.	BY:	DATE:	S-163
1			3			TOTAL SHEETS
2			4			83

STV / Ralph Whitehead Associates, Inc.
1000 West Morehead St., Ste. 200
Charlotte, NC 28208
NC License No. F-0991

DRAWN BY : KMG	DATE : 12-12	DESIGN ENGINEER OF RECORD: K. BAILEY	DATE : 5-13
CHECKED BY : AR	DATE : 12-12		

5/30/2013 4:59:33 PM R:\ustation\Finals\Pavement Marking Alignment.dgn

REINFORCING BAR SCHEDULE
UNIT A - SPANS 1 & 2

MARK	NO.	SIZE	TYPE	LENGTH	WEIGHT
✳ A1-A	387	#5	STR.	43′-9″	17,659
✳ A2-A	387	#5	STR.	21′-10″	8,813
A301-A	387	#5	STR.	43′-6″	17,558
A302-A	387	#5	STR.	21′-9″	8,779
✳ B1-A	44	#5	STR.	52′-10″	2,425
✳ B2-A	44	#7	STR.	60′-0″	5,396
✳ B3-A	88	#5	STR.	52′-4″	4,803
✳ B10-A	41	#7	STR.	35′-0″	2,933
✳ B11-A	41	#7	STR.	30′-0″	2,514
B101-A	130	#5	STR.	35′-2″	4,768
B102-A	65	#6	STR.	50′-0″	4,882
B103-A	130	#5	STR.	49′-9″	6,746
B110-A	10	#7	STR.	30′-0″	613
✳ G2-A	4	#5	STR.	32′-9″	137
✳ J1-A	128	#4	12	1′-5″	121
✳ K1-A	16	#8	1	25′-3″	1,079
✳ K3-A	8	#8	2	16′-3″	347
✳ K5-A	20	#6	STR.	7′-0″	210
K100-A	7	#4	STR.	54′-6″	255
K120-A	20	#4	STR.	7′-0″	94
K121-A	50	#4	STR.	10′-0″	334
✳ S1-A	80	#5	3	6′-0″	501
✳ S2-A	80	#4	4	2′-7″	138
S4-A	280	#4	5	2′-9″	514
✳ S10-A	612	#5	11	5′-5″	3,458
U1-A	40	#4	9	16′-10″	450
U2-A	10	#4	4	11′-0″	73
✳ EPOXY COATED REINF. STEEL (LBS.)					50,534
REINF. STEEL (LBS.)					45,066

REINFORCING BAR SCHEDULE
UNIT B - SPANS 3-5

MARK	NO.	SIZE	TYPE	LENGTH	WEIGHT	MARK	NO.	SIZE	TYPE	LENGTH	WEIGHT
✳ A1-B	220	#5	STR.	46′-7″	10,689	A301-B	220	#5	STR.	46′-3″	10,613
✳ A2-B	220	#5	STR.	23′-4″	5,354	A302-B	220	#5	STR.	23′-4″	5,354
✳ A3-B	291	#5	STR.	51′-8″	15,682	A303-B	291	#5	STR.	51′-4″	15,580
✳ A4-B	291	#5	STR.	25′-10″	7,841	A304-B	291	#5	STR.	25′-10″	7,841
✳ A100-B	18	#5	STR.	38′-7″	724	A400-B	18	#5	STR.	38′-4″	720
✳ A101-B	18	#5	STR.	36′-4″	682	A401-B	18	#5	STR.	36′-2″	679
✳ A102-B	18	#5	STR.	34′-2″	641	A402-B	18	#5	STR.	33′-11″	637
✳ A103-B	18	#5	STR.	31′-10″	598	A403-B	18	#5	STR.	31′-9″	596
✳ A104-B	18	#5	STR.	29′-8″	557	A404-B	18	#5	STR.	29′-6″	554
✳ A105-B	18	#5	STR.	27′-6″	516	A405-B	18	#5	STR.	27′-4″	513
✳ A106-B	18	#5	STR.	25′-4″	476	A406-B	18	#5	STR.	25′-2″	472
✳ A107-B	18	#5	STR.	22′-1″	415	A407-B	18	#5	STR.	22′-11″	430
✳ A108-B	18	#5	STR.	20′-11″	393	A408-B	18	#5	STR.	20′-9″	390
✳ A109-B	18	#5	STR.	18′-9″	352	A409-B	18	#5	STR.	18′-7″	349
✳ A110-B	18	#5	STR.	16′-7″	311	A410-B	18	#5	STR.	16′-5″	308
✳ A111-B	18	#5	STR.	14′-6″	272	A411-B	18	#5	STR.	14′-4″	269
✳ A112-B	18	#5	STR.	12′-4″	232	A412-B	18	#5	STR.	12′-2″	228
✳ A113-B	1	#5	STR.	15′-5″	16	A413-B	1	#5	STR.	17′-5″	18
✳ A114-B	1	#5	STR.	14′-11″	16	A414-B	1	#5	STR.	16′-11″	18
✳ A115-B	1	#5	STR.	14′-5″	15	A415-B	1	#5	STR.	16′-5″	17
✳ A116-B	1	#5	STR.	13′-11″	15	A416-B	1	#5	STR.	15′-11″	17
✳ A117-B	1	#5	STR.	13′-5″	14	A417-B	1	#5	STR.	15′-5″	16
✳ A118-B	1	#5	STR.	12′-11″	13	A418-B	1	#5	STR.	14′-11″	16
✳ A119-B	1	#5	STR.	12′-5″	13	A419-B	1	#5	STR.	14′-5″	15
✳ A120-B	1	#5	STR.	11′-11″	12	A420-B	1	#5	STR.	13′-11″	15
✳ A121-B	1	#5	STR.	11′-5″	12	A421-B	1	#5	STR.	13′-5″	14
✳ A122-B	1	#5	STR.	10′-11″	11	A422-B	1	#5	STR.	12′-11″	13
✳ A123-B	1	#5	STR.	10′-5″	11	A423-B	1	#5	STR.	12′-5″	13
✳ A124-B	1	#5	STR.	10′-0″	10	A424-B	1	#5	STR.	12′-0″	13
✳ A125-B	1	#5	STR.	9′-6″	10	A425-B	1	#5	STR.	11′-6″	12
✳ A126-B	1	#5	STR.	9′-0″	9	A426-B	1	#5	STR.	11′-0″	11
✳ A127-B	1	#5	STR.	8′-6″	9	A427-B	1	#5	STR.	10′-6″	11
✳ A128-B	1	#5	STR.	8′-0″	8	A428-B	1	#5	STR.	10′-0″	10
✳ A129-B	1	#5	STR.	7′-6″	8	A429-B	1	#5	STR.	9′-6″	10
✳ A130-B	1	#5	STR.	7′-0″	7	A430-B	1	#5	STR.	9′-0″	9
✳ A131-B	1	#5	STR.	6′-6″	7	A431-B	1	#5	STR.	8′-6″	9
✳ A132-B	1	#5	STR.	6′-0″	6	A432-B	1	#5	STR.	8′-0″	8
✳ A133-B	1	#5	STR.	5′-6″	6	A433-B	1	#5	STR.	7′-6″	8
✳ A134-B	1	#5	STR.	5′-0″	5	A434-B	1	#5	STR.	7′-0″	7
✳ A135-B	1	#5	STR.	4′-6″	5	A435-B	1	#5	STR.	6′-6″	7
✳ A136-B	8	#5	STR.	4′-0″	33	A436-B	12	#5	STR.	6′-0″	75
✳ A137-B	1	#6	STR.	23′-8″	36						
✳ A138-B	1	#6	STR.	24′-8″	37						
✳ A139-B	1	#6	STR.	25′-8″	39						

MARK	NO.	SIZE	TYPE	LENGTH	WEIGHT
✳ B1-B	110	#5	STR.	47′-6″	5,450
✳ B2-B	110	#6	STR.	60′-0″	9,913
✳ B3-B	22	#5	STR.	34′-8″	795
✳ B4-B	8	#5	STR.	57′-6″	480
✳ B5-B	8	#5	STR.	51′-10″	432
✳ B6-B	8	#5	STR.	46′-0″	384
✳ B7-B	8	#5	STR.	40′-4″	337
✳ B8-B	12	#5	STR.	34′-8″	434
✳ B9-B	22	#5	STR.	45′-6″	1,044
✳ B10-B	16	#5	STR.	41′-0″	684
✳ B11-B	16	#5	STR.	38′-0″	634
✳ B12-B	16	#5	STR.	35′-2″	587
✳ B13-B	16	#5	STR.	32′-4″	540
✳ B14-B	12	#5	STR.	57′-0″	713
✳ B20-B	108	#7	STR.	40′-0″	8,830
✳ B21-B	108	#7	STR.	30′-0″	6,623
B101-B	152	#5	STR.	47′-2″	7,478
B102-B	152	#6	STR.	60′-0″	13,698
B103-B	32	#5	STR.	33′-8″	1,124
B104-B	11	#5	STR.	55′-10″	641
B105-B	11	#5	STR.	50′-1″	575
B106-B	11	#5	STR.	44′-3″	508
B107-B	11	#5	STR.	38′-5″	441
B108-B	16	#5	STR.	32′-9″	547
B109-B	32	#5	STR.	44′-11″	1,499
B110-B	22	#5	STR.	40′-5″	927
B111-B	22	#5	STR.	37′-8″	864
B112-B	22	#5	STR.	34′-10″	799
B113-B	22	#5	STR.	32′-0″	734
B114-B	16	#5	STR.	56′-0″	935
B120-B	16	#7	STR.	60′-0″	1,962
B121-B	16	#7	STR.	23′-6″	769
✳ G2-B	2	#5	STR.	32′-11″	69
✳ G3-B	2	#5	STR.	57′-9″	120
✳ J1-B	177	#4	12	1′-5″	168

MARK	NO.	SIZE	TYPE	LENGTH	WEIGHT
✳ K1-B	10	#8	1	21′-5″	572
✳ K2-B	10	#8	1	35′-9″	955
✳ K3-B	4	#8	2	14′-5″	154
✳ K4-B	4	#8	2	23′-2″	247
✳ K5-B	12	#6	STR.	5′-2″	93
✳ K6-B	6	#6	STR.	12′-4″	111
✳ K7-B	6	#6	STR.	13′-9″	124
✳ K8-B	6	#6	STR.	15′-1″	136
K100-B	7	#4	STR.	59′-0″	276
K101-B	35	#4	8	15′-6″	362
K102-B	14	#4	10	7′-9″	72
K120-B	24	#4	STR.	5′-10″	94
K121-B	60	#4	STR.	8′-10″	354
K122-B	24	#4	STR.	8′-0″	128
K123-B	60	#4	STR.	11′-5″	458
✳ S1-B	108	#5	3	6′-0″	676
✳ S2-B	36	#4	4	2′-6″	60
✳ S3-B	72	#4	4	4′-6″	216
S4-B	300	#4	5	2′-9″	551
S5-B	336	#4	5	3′-5″	767
U1-B	42	#4	9	16′-8″	468
U2-B	48	#4	9	17′-4″	556
U3-B	12	#4	4	11′-0″	88
U4-B	12	#4	4	11′-8″	94
✳ EPOXY COATED REINF. STEEL (LBS.)					87,699
REINF. STEEL (LBS.)					83,664

PROJECT NO. U-2524C

GUILFORD COUNTY

STATION: POT 407+73.35 -L-
= POT 29+32.06 -Y4-

SHEET 1 OF 8

NORTH CAROLINA PROFESSIONAL SEAL 28479 ENGINEER KEVIN G. BAILEY
5-30-13

STATE OF NORTH CAROLINA
DEPARTMENT OF TRANSPORTATION
RALEIGH

SUPERSTRUCTURE BILL OF MATERIALS

-LEFT LANE-

REVISIONS						SHEET NO.
NO.	BY:	DATE:	NO.	BY:	DATE:	S-164
1			3			TOTAL SHEETS
2			4			836

STV / Ralph Whitehead Associates, Inc.
1000 West Morehead St., Ste. 200
Charlotte, NC 28208
NC License No. F-0991

DRAWN BY : ACA DATE : 1-13
CHECKED BY : AJP DATE : 2-13
DESIGN ENGINEER OF RECORD: A. PETER DATE : 5-13

5/30/2013 4:59:37 PM R:\ustation\Finals\Super Bill of Mats Sheet 1 of 8.dgn

REINFORCING BAR SCHEDULE
SPAN 6

MARK	NO.	SIZE	TYPE	LENGTH	WEIGHT
✳ A1-6	379	#5	STR.	50′-0″	19,765
✳ A2-6	379	#5	STR.	27′-6″	10,871
✳ A101-6	14	#5	STR.	38′-7″	563
✳ A102-6	14	#5	STR.	37′-3″	544
✳ A103-6	14	#5	STR.	35′-10″	523
✳ A104-6	14	#5	STR.	34′-5″	503
✳ A105-6	14	#5	STR.	33′-0″	482
✳ A106-6	14	#5	STR.	31′-7″	461
✳ A107-6	14	#5	STR.	30′-2″	440
✳ A108-6	14	#5	STR.	28′-10″	421
✳ A109-6	14	#5	STR.	27′-5″	400
✳ A110-6	14	#5	STR.	26′-0″	380
✳ A111-6	14	#5	STR.	24′-7″	359
✳ A112-6	14	#5	STR.	23′-2″	338
✳ A113-6	14	#5	STR.	21′-9″	318
✳ A114-6	14	#5	STR.	20′-4″	297
✳ A115-6	14	#5	STR.	18′-11″	276
✳ A116-6	14	#5	STR.	17′-5″	254
✳ A117-6	14	#5	STR.	16′-0″	234
✳ A118-6	14	#5	STR.	14′-7″	213
✳ A119-6	14	#5	STR.	13′-2″	192
✳ A120-6	14	#5	STR.	11′-9″	172
✳ A121-6	14	#5	STR.	10′-4″	151
✳ A122-6	1	#5	STR.	13′-7″	14
✳ A123-6	1	#5	STR.	13′-2″	14
✳ A124-6	1	#5	STR.	12′-9″	13
✳ A125-6	1	#5	STR.	12′-4″	13
✳ A126-6	1	#5	STR.	11′-11″	12
✳ A127-6	1	#5	STR.	11′-6″	12
✳ A128-6	1	#5	STR.	11′-1″	12
✳ A129-6	1	#5	STR.	10′-8″	11
✳ A130-6	1	#5	STR.	10′-3″	11
✳ A131-6	1	#5	STR.	9′-11″	10
✳ A132-6	1	#5	STR.	9′-6″	10
✳ A133-6	1	#5	STR.	9′-1″	9
✳ A134-6	1	#5	STR.	8′-8″	9
✳ A135-6	1	#5	STR.	8′-3″	9
✳ A136-6	1	#5	STR.	7′-10″	8
✳ A137-6	1	#5	STR.	7′-5″	8
✳ A138-6	1	#5	STR.	7′-0″	7
✳ A139-6	1	#5	STR.	6′-7″	7
✳ A140-6	1	#5	STR.	6′-2″	6
✳ A141-6	1	#5	STR.	5′-9″	6
✳ A142-6	1	#5	STR.	5′-4″	6
✳ A143-6	1	#5	STR.	4′-11″	5
✳ A144-6	1	#5	STR.	4′-6″	5
✳ A145-6	5	#5	STR.	4′-0″	21
✳ A146-6	5	#5	STR.	3′-0″	16
✳ A147-6	1	#6	STR.	22′-0″	33
✳ A148-6	1	#6	STR.	23′-0″	35
✳ A149-6	1	#6	STR.	24′-0″	36

MARK	NO.	SIZE	TYPE	LENGTH	WEIGHT
✳ A150-6	14	#5	STR.	38′-8″	565
✳ A151-6	14	#5	STR.	36′-11″	539
✳ A152-6	14	#5	STR.	35′-11″	524
✳ A153-6	14	#5	STR.	34′-7″	505
✳ A154-6	14	#5	STR.	33′-3″	486
✳ A155-6	14	#5	STR.	31′-10″	465
✳ A156-6	14	#5	STR.	30′-6″	445
✳ A157-6	14	#5	STR.	29′-2″	426
✳ A158-6	14	#5	STR.	27′-10″	406
✳ A159-6	14	#5	STR.	26′-5″	386
✳ A160-6	14	#5	STR.	25′-1″	366
✳ A161-6	14	#5	STR.	23′-9″	347
✳ A162-6	14	#5	STR.	22′-5″	327
✳ A163-6	14	#5	STR.	21′-1″	308
✳ A164-6	14	#5	STR.	19′-9″	288
✳ A165-6	14	#5	STR.	18′-5″	269
✳ A166-6	14	#5	STR.	17′-1″	249
✳ A167-6	14	#5	STR.	15′-9″	230
✳ A168-6	14	#5	STR.	14′-5″	211
✳ A169-6	14	#5	STR.	13′-1″	191
✳ A170-6	14	#5	STR.	11′-9″	172
✳ A171-6	14	#5	STR.	10′-5″	152
✳ A172-6	1	#5	STR.	14′-2″	15
✳ A173-6	1	#5	STR.	13′-9″	14
✳ A174-6	1	#5	STR.	13′-5″	14
✳ A175-6	1	#5	STR.	13′-0″	14
✳ A176-6	1	#5	STR.	12′-8″	13
✳ A177-6	1	#5	STR.	12′-3″	13
✳ A178-6	1	#5	STR.	11′-11″	12
✳ A179-6	1	#5	STR.	11′-6″	12
✳ A180-6	1	#5	STR.	11′-2″	12
✳ A181-6	1	#5	STR.	10′-9″	11
✳ A182-6	1	#5	STR.	10′-5″	11
✳ A183-6	1	#5	STR.	10′-0″	10
✳ A184-6	1	#5	STR.	9′-8″	10
✳ A185-6	1	#5	STR.	9′-3″	10
✳ A186-6	1	#5	STR.	8′-11″	9
✳ A187-6	1	#5	STR.	8′-6″	9
✳ A188-6	1	#5	STR.	8′-2″	9
✳ A189-6	1	#5	STR.	7′-9″	8
✳ A190-6	1	#5	STR.	7′-5″	8
✳ A191-6	1	#5	STR.	7′-0″	7
✳ A192-6	1	#5	STR.	6′-8″	7
✳ A193-6	1	#5	STR.	6′-3″	7
✳ A194-6	1	#5	STR.	5′-11″	6
✳ A195-6	1	#5	STR.	5′-6″	6
✳ A196-6	1	#5	STR.	5′-2″	5
✳ A197-6	1	#5	STR.	4′-9″	5
✳ A198-6	6	#5	STR.	4′-3″	27
✳ A199-6	5	#5	STR.	3′-0″	16
✳ A200-6	1	#6	STR.	24′-0″	36
✳ A201-6	1	#6	STR.	25′-0″	38
✳ A202-6	1	#6	STR.	26′-0″	39

MARK	NO.	SIZE	TYPE	LENGTH	WEIGHT
A301-6	379	#5	STR.	50′-0″	19,765
A302-6	379	#5	STR.	27′-2″	10,739
A401-6	14	#5	STR.	38′-9″	566
A402-6	14	#5	STR.	37′-5″	546
A403-6	14	#5	STR.	36′-0″	526
A404-6	14	#5	STR.	34′-7″	505
A405-6	14	#5	STR.	33′-2″	484
A406-6	14	#5	STR.	31′-9″	464
A407-6	14	#5	STR.	30′-4″	443
A408-6	14	#5	STR.	29′-0″	423
A409-6	14	#5	STR.	27′-7″	403
A410-6	14	#5	STR.	26′-2″	382
A411-6	14	#5	STR.	24′-9″	361
A412-6	14	#5	STR.	23′-4″	341
A413-6	14	#5	STR.	21′-11″	320
A414-6	14	#5	STR.	20′-6″	299
A415-6	14	#5	STR.	19′-1″	279
A416-6	14	#5	STR.	17′-7″	257
A417-6	14	#5	STR.	16′-2″	236
A418-6	14	#5	STR.	14′-9″	215
A419-6	14	#5	STR.	13′-4″	195
A420-6	14	#5	STR.	11′-11″	174
A421-6	14	#5	STR.	10′-6″	153
A422-6	1	#5	STR.	15′-7″	16
A423-6	1	#5	STR.	15′-2″	16
A424-6	1	#5	STR.	14′-9″	15
A425-6	1	#5	STR.	14′-4″	15
A426-6	1	#5	STR.	13′-11″	15
A427-6	1	#5	STR.	13′-6″	14
A428-6	1	#5	STR.	13′-1″	14
A429-6	1	#5	STR.	12′-8″	13
A430-6	1	#5	STR.	12′-3″	13
A431-6	1	#5	STR.	11′-11″	12
A432-6	1	#5	STR.	11′-6″	12
A433-6	1	#5	STR.	11′-1″	12
A434-6	1	#5	STR.	10′-8″	11
A435-6	1	#5	STR.	10′-3″	11
A436-6	1	#5	STR.	9′-10″	10
A437-6	1	#5	STR.	9′-5″	10
A438-6	1	#5	STR.	9′-0″	9
A439-6	1	#5	STR.	8′-7″	9
A440-6	1	#5	STR.	8′-2″	9
A441-6	1	#5	STR.	7′-9″	8
A442-6	1	#5	STR.	7′-4″	8
A443-6	1	#5	STR.	6′-11″	7
A444-6	1	#5	STR.	6′-6″	7
A445-6	8	#5	STR.	6′-0″	50
A446-6	8	#5	STR.	4′-0″	33

MARK	NO.	SIZE	TYPE	LENGTH	WEIGHT
A450-6	14	#5	STR.	38′-10″	567
A451-6	14	#5	STR.	37′-1″	541
A452-6	14	#5	STR.	36′-1″	527
A453-6	14	#5	STR.	34′-9″	507
A454-6	14	#5	STR.	33′-5″	488
A455-6	14	#5	STR.	32′-0″	467
A456-6	14	#5	STR.	30′-8″	448
A457-6	14	#5	STR.	29′-4″	428
A458-6	14	#5	STR.	28′-0″	409
A459-6	14	#5	STR.	26′-7″	388
A460-6	14	#5	STR.	25′-3″	369
A461-6	14	#5	STR.	23′-11″	349
A462-6	14	#5	STR.	22′-7″	330
A463-6	14	#5	STR.	21′-3″	310
A464-6	14	#5	STR.	19′-11″	291
A465-6	14	#5	STR.	18′-7″	271
A466-6	14	#5	STR.	17′-3″	252
A467-6	14	#5	STR.	15′-11″	232
A468-6	14	#5	STR.	14′-7″	213
A469-6	14	#5	STR.	13′-3″	193
A470-6	14	#5	STR.	11′-11″	174
A471-6	14	#5	STR.	10′-7″	155
A472-6	1	#5	STR.	16′-2″	17
A473-6	1	#5	STR.	15′-9″	16
A474-6	1	#5	STR.	15′-5″	16
A475-6	1	#5	STR.	15′-0″	16
A476-6	1	#5	STR.	14′-8″	15
A477-6	1	#5	STR.	14′-3″	15
A478-6	1	#5	STR.	13′-11″	15
A479-6	1	#5	STR.	13′-6″	14
A480-6	1	#5	STR.	13′-2″	14
A481-6	1	#5	STR.	12′-9″	13
A482-6	1	#5	STR.	12′-5″	13
A483-6	1	#5	STR.	12′-0″	13
A484-6	1	#5	STR.	11′-8″	12
A485-6	1	#5	STR.	11′-3″	12
A486-6	1	#5	STR.	10′-11″	11
A487-6	1	#5	STR.	10′-6″	11
A488-6	1	#5	STR.	10′-2″	11
A489-6	1	#5	STR.	9′-9″	10
A490-6	1	#5	STR.	9′-5″	10
A491-6	1	#5	STR.	9′-0″	9
A492-6	1	#5	STR.	8′-8″	9
A493-6	1	#5	STR.	8′-3″	9
A494-6	1	#5	STR.	7′-11″	8
A495-6	1	#5	STR.	7′-6″	8
A496-6	1	#5	STR.	7′-2″	7
A497-6	1	#5	STR.	6′-9″	7
A498-6	9	#5	STR.	6′-3″	59
A499-6	8	#5	STR.	4′-3″	35
✳ B1-6	260	#5	STR.	54′-0″	14,644
B101-6	470	#5	STR.	54′-0″	26,471
✳ G2-6	2	#5	STR.	57′-9″	120
✳ G3-6	3	#5	STR.	41′-3″	129
✳ J1-6	233	#4	12	1′-5″	220
✳ K1-6	30	#5	1	23′-7″	738
✳ K3-6	12	#5	2	16′-5″	205
✳ S6-6	156	#5	6	6′-11″	1,125
✳ EPOXY COATED REINF. STEEL (LBS.)					63,966
REINF. STEEL (LBS.)					73,226

PROJECT NO. U-2524C

GUILFORD COUNTY

STATION: POT 407+73.35 -L-
= POT 29+32.06 -Y4-

SHEET 2 OF 8

NORTH CAROLINA PROFESSIONAL SEAL 28479 ENGINEER KEVIN G. BAILEY
5-30-13

STATE OF NORTH CAROLINA
DEPARTMENT OF TRANSPORTATION
RALEIGH

SUPERSTRUCTURE
BILL OF MATERIALS

-LEFT LANE-

STV / Ralph Whitehead Associates, Inc.
1000 West Morehead St., Ste. 200
Charlotte, NC 28208
NC License No. F-0991

REVISIONS						SHEET NO.
NO.	BY:	DATE:	NO.	BY:	DATE:	S-165
1			3			TOTAL SHEETS
2			4			836

DRAWN BY : ACA DATE : 1-13
CHECKED BY : AJP DATE : 2-13

DESIGN ENGINEER OF RECORD: A. PETER DATE : 5-13

5/30/2013 4:59:43 PM R:\Ustation\Finals\Super Bill of Mats Sheet 2 of 8.dgn

REINFORCING BAR SCHEDULE
UNIT C - SPANS 7 & 8

MARK	NO.	SIZE	TYPE	LENGTH	WEIGHT
✳ A1-C	233	#5	STR.	51'-9"	12,576
✳ A2-C	233	#5	STR.	25'-10"	6,278
✳ A100-C	12	#5	STR.	38'-2"	478
✳ A101-C	12	#5	STR.	36'-11"	462
✳ A102-C	12	#5	STR.	35'-8"	446
✳ A103-C	12	#5	STR.	34'-5"	431
✳ A104-C	12	#5	STR.	33'-2"	415
✳ A105-C	12	#5	STR.	31'-11"	399
✳ A106-C	12	#5	STR.	30'-8"	384
✳ A107-C	12	#5	STR.	29'-4"	367
✳ A108-C	12	#5	STR.	28'-1"	351
✳ A109-C	12	#5	STR.	26'-10"	336
✳ A110-C	12	#5	STR.	25'-6"	319
✳ A111-C	12	#5	STR.	24'-0"	300
✳ A112-C	12	#5	STR.	22'-8"	284
✳ A113-C	12	#5	STR.	21'-5"	268
✳ A114-C	12	#5	STR.	20'-1"	251
✳ A115-C	12	#5	STR.	18'-9"	235
✳ A116-C	12	#5	STR.	17'-8"	221
✳ A117-C	12	#5	STR.	16'-4"	204
✳ A118-C	12	#5	STR.	15'-0"	188
✳ A119-C	12	#5	STR.	13'-9"	172
✳ A120-C	12	#5	STR.	12'-4"	154
✳ A121-C	12	#5	STR.	11'-0"	138
✳ A122-C	12	#5	STR.	8'-10"	111
✳ A123-C	1	#5	STR.	12'-4"	13
✳ A124-C	1	#5	STR.	11'-11"	12
✳ A125-C	1	#5	STR.	11'-6"	12
✳ A126-C	1	#5	STR.	11'-0"	11
✳ A127-C	1	#5	STR.	10'-7"	11
✳ A128-C	1	#5	STR.	10'-2"	11
✳ A129-C	1	#5	STR.	9'-9"	10
✳ A130-C	1	#5	STR.	9'-3"	10
✳ A131-C	1	#5	STR.	8'-10"	9
✳ A132-C	1	#5	STR.	8'-4"	9
✳ A133-C	1	#5	STR.	7'-11"	8
✳ A134-C	1	#5	STR.	7'-6"	8
✳ A135-C	1	#5	STR.	7'-0"	7
✳ A136-C	1	#5	STR.	6'-7"	7
✳ A137-C	1	#5	STR.	6'-2"	6
✳ A138-C	1	#5	STR.	5'-8"	6
✳ A139-C	1	#5	STR.	5'-3"	5
✳ A140-C	1	#5	STR.	4'-10"	5
✳ A141-C	1	#5	STR.	4'-4"	5
✳ A142-C	1	#5	STR.	3'-11"	4
✳ A143-C	1	#5	STR.	3'-6"	4
✳ A144-C	8	#5	STR.	3'-0"	25
✳ A145-C	1	#6	STR.	24'-0"	36
✳ A146-C	1	#6	STR.	25'-0"	38
✳ A147-C	1	#6	STR.	26'-0"	39

MARK	NO.	SIZE	TYPE	LENGTH	WEIGHT
A301-C	233	#5	STR.	51'-9"	12,576
A302-C	233	#5	STR.	25'-6"	6,197
A400-C	12	#5	STR.	38'-3"	479
A401-C	12	#5	STR.	37'-0"	463
A402-C	12	#5	STR.	35'-9"	447
A403-C	12	#5	STR.	34'-6"	432
A404-C	12	#5	STR.	33'-3"	416
A405-C	12	#5	STR.	32'-0"	401
A406-C	12	#5	STR.	30'-9"	385
A407-C	12	#5	STR.	29'-5"	368
A408-C	12	#5	STR.	28'-2"	353
A409-C	12	#5	STR.	26'-11"	337
A410-C	12	#5	STR.	25'-7"	320
A411-C	12	#5	STR.	24'-1"	301
A412-C	12	#5	STR.	22'-9"	285
A413-C	12	#5	STR.	21'-6"	269
A414-C	12	#5	STR.	20'-2"	252
A415-C	12	#5	STR.	18'-10"	236
A416-C	12	#5	STR.	17'-9"	222
A417-C	12	#5	STR.	16'-5"	205
A418-C	12	#5	STR.	15'-1"	189
A419-C	12	#5	STR.	13'-9"	172
A420-C	12	#5	STR.	12'-5"	155
A421-C	12	#5	STR.	11'-1"	139
A422-C	12	#5	STR.	9'-9"	122
A423-C	1	#5	STR.	14'-1"	15
A424-C	1	#5	STR.	13'-8"	14
A425-C	1	#5	STR.	13'-3"	14
A426-C	1	#5	STR.	12'-9"	13
A427-C	1	#5	STR.	12'-4"	13
A428-C	1	#5	STR.	11'-11"	12
A429-C	1	#5	STR.	11'-6"	12
A430-C	1	#5	STR.	11'-0"	11
A431-C	1	#5	STR.	10'-7"	11
A432-C	1	#5	STR.	10'-1"	11
A433-C	1	#5	STR.	9'-8"	10
A434-C	1	#5	STR.	9'-3"	10
A435-C	1	#5	STR.	8'-9"	9
A436-C	1	#5	STR.	8'-4"	9
A437-C	1	#5	STR.	7'-11"	8
A438-C	1	#5	STR.	7'-5"	8
A439-C	1	#5	STR.	7'-0"	7
A440-C	1	#5	STR.	6'-7"	7
A441-C	1	#5	STR.	6'-1"	6
A442-C	1	#5	STR.	5'-8"	6
A443-C	1	#5	STR.	5'-3"	5
A444-C	11	#5	STR.	4'-6"	52

MARK	NO.	SIZE	TYPE	LENGTH	WEIGHT
✳ B1-C	6	#5	STR.	23'-8"	148
✳ B2-C	5	#5	STR.	27'-6"	143
✳ B3-C	5	#5	STR.	31'-5"	164
✳ B4-C	5	#5	STR.	35'-6"	185
✳ B5-C	5	#5	STR.	39'-6"	206
✳ B6-C	5	#5	STR.	42'-10"	223
✳ B7-C	5	#5	STR.	46'-8"	243
✳ B8-C	5	#5	STR.	50'-6"	263
✳ B9-C	5	#5	STR.	53'-11"	281
✳ B10-C	6	#5	STR.	57'-9"	361
✳ B11-C	6	#5	STR.	51'-9"	324
✳ B12-C	5	#5	STR.	57'-8"	301
✳ B13-C	10	#5	STR.	33'-1"	345
✳ B14-C	10	#5	STR.	36'-1"	376
✳ B15-C	10	#5	STR.	39'-1"	408
✳ B16-C	10	#5	STR.	41'-11"	437
✳ B17-C	10	#5	STR.	44'-10"	468
✳ B18-C	10	#5	STR.	47'-10"	499
✳ B19-C	10	#5	STR.	50'-9"	529
✳ B20-C	12	#5	STR.	53'-10"	674
✳ B21-C	52	#6	STR.	60'-0"	4,686
✳ B22-C	49	#7	STR.	60'-0"	6,009
✳ B23-C	49	#7	STR.	50'-0"	5,008
B100-C	4	#5	STR.	34'-6"	144
B101-C	11	#5	STR.	40'-2"	461
B102-C	11	#5	STR.	45'-10"	526
B103-C	11	#5	STR.	51'-6"	591
B104-C	11	#5	STR.	57'-0"	654
B105-C	22	#5	STR.	32'-4"	742
B106-C	22	#5	STR.	35'-0"	803
B107-C	8	#5	STR.	36'-4"	303
B110-C	4	#5	STR.	41'-1"	171
B111-C	11	#5	STR.	49'-10"	572
B112-C	11	#5	STR.	58'-6"	671
B113-C	22	#5	STR.	34'-9"	797
B114-C	22	#5	STR.	39'-1"	897
B115-C	22	#5	STR.	43'-5"	996
B116-C	22	#5	STR.	47'-8"	1,094
B117-C	8	#5	STR.	49'-10"	416
B121-C	74	#6	STR.	55'-6"	6,169
B122-C	10	#7	STR.	30'-0"	613

MARK	NO.	SIZE	TYPE	LENGTH	WEIGHT
✳ G2-C	3	#5	STR.	41'-1"	129
✳ G3-C	2	#5	STR.	38'-9"	81
✳ J1-C	196	#4	(12)	1'-5"	185
✳ K1-C	10	#8	(1)	37'-1"	990
✳ K2-C	10	#8	(1)	25'-6"	681
✳ K3-C	2	#8	(2)	25'-9"	138
✳ K4-C	4	#8	(2)	16'-7"	177
✳ K5-C	2	#8	(2)	24'-7"	131
✳ K6-C	6	#6	STR.	15'-0"	135
✳ K7-C	6	#6	STR.	14'-0"	126
✳ K8-C	6	#6	STR.	13'-0"	117
✳ K9-C	12	#6	STR.	7'-0"	126
K100-C	35	#4	(8)	17'-4"	405
K101-C	14	#4	(10)	8'-8"	81
K120-C	24	#4	STR.	8'-9"	140
K121-C	60	#4	STR.	12'-7"	504
✳ S1-C	120	#5	(3)	6'-0"	751
✳ S2-C	72	#4	(4)	4'-4"	208
✳ S3-C	48	#4	(4)	2'-6"	80
S4-C	336	#4	(5)	3'-9"	842
✳ S10-C	302	#5	(11)	5'-5"	1,706
U1-C	48	#4	(9)	17'-8"	566
U2-C	12	#4	(4)	12'-0"	96
✳ EPOXY COATED REINF. STEEL (LBS.)					52,372
REINF. STEEL (LBS.)					45,116

REINFORCING BAR SCHEDULE
UNIT D - SPANS 9-11

MARK	NO.	SIZE	TYPE	LENGTH	WEIGHT
✳ A1-D	617	#5	STR.	60'-0"	38,612
✳ A2-D	617	#5	STR.	17'-5"	11,208
A301-D	617	#5	STR.	60'-0"	38,612
A302-D	617	#5	STR.	17'-1"	10,994
✳ B1-D	208	#5	STR.	56'-11"	12,348
✳ B2-D	104	#7	STR.	60'-0"	12,755
✳ B3-D	52	#5	STR.	53'-8"	2,911
✳ B10-D	98	#7	STR.	50'-0"	10,016
✳ B11-D	98	#7	STR.	40'-0"	8,012
B101-D	272	#5	STR.	51'-4"	14,563
B102-D	136	#7	STR.	60'-0"	16,679
B103-D	136	#5	STR.	37'-7"	5,331
B110-D	56	#7	STR.	40'-0"	4,579
✳ G1-D	23	#5	(7)	3'-8"	88
✳ G2-D	2	#5	STR.	38'-9"	81
✳ J1-D	76	#4	(12)	1'-5"	72
✳ K1-D	12	#8	(1)	22'-7"	724
✳ K2-D	12	#8	(1)	20'-10"	667
✳ K3-D	4	#8	(2)	15'-1"	161
✳ K4-D	4	#8	(2)	14'-3"	152
✳ K5-D	14	#6	STR.	5'-7"	117
✳ K6-D	21	#6	STR.	8'-1"	255
✳ K7-D	3	#6	STR.	3'-10"	17
✳ K8-D	3	#6	STR.	3'-1"	14
K100-D	28	#4	STR.	34'-3"	641
K120-D	56	#4	STR.	5'-7"	209
K121-D	140	#4	STR.	8'-7"	803
✳ S1-D	98	#5	(3)	6'-0"	613
✳ S2-D	42	#4	(4)	2'-9"	77
✳ S3-D	75	#4	(4)	4'-5"	221
S4-D	616	#4	(5)	2'-9"	1,132
✳ S10-D	1,488	#5	(11)	5'-5"	8,407
U1-D	84	#4	(9)	17'-4"	973
U2-D	28	#4	(4)	11'-0"	206
✳ EPOXY COATED REINF. STEEL (LBS.)					107,528
REINF. STEEL (LBS.)					94,722

REINFORCING BAR SCHEDULE
UNIT E - SPANS 12-14

MARK	NO.	SIZE	TYPE	LENGTH	WEIGHT
✳ A1-E	619	#5	STR.	60'-0"	38,737
✳ A2-E	619	#5	STR.	17'-5"	11,244
A301-E	619	#5	STR.	60'-0"	38,737
A302-E	619	#5	STR.	17'-1"	11,029
✳ B1-E	208	#5	STR.	57'-0"	12,366
✳ B2-E	104	#7	STR.	60'-0"	12,755
✳ B3-E	52	#5	STR.	55'-0"	2,983
✳ B10-E	98	#7	STR.	50'-0"	10,016
✳ B11-E	98	#7	STR.	40'-0"	8,012
B101-E	272	#5	STR.	52'-0"	14,752
B102-E	136	#7	STR.	60'-0"	16,679
B103-E	136	#5	STR.	37'-9"	5,355
B110-E	56	#7	STR.	60'-0"	6,868
✳ G1-E	23	#5	(7)	3'-8"	88
✳ G2-E	2	#5	STR.	38'-9"	81
✳ J1-E	76	#4	(12)	1'-5"	72
✳ K1-E	12	#8	(1)	22'-7"	724
✳ K2-E	12	#8	(1)	20'-10"	667
✳ K3-E	4	#8	(2)	15'-1"	161
✳ K4-E	4	#8	(2)	14'-3"	152
✳ K5-E	14	#6	STR.	5'-7"	117
✳ K6-E	21	#6	STR.	8'-3"	260
✳ K7-E	3	#6	STR.	3'-11"	18
✳ K8-E	3	#6	STR.	3'-2"	14
K100-E	28	#4	STR.	34'-3"	641
K120-E	56	#4	STR.	5'-7"	209
K121-E	140	#4	STR.	8'-7"	803
✳ S1-E	98	#5	(3)	6'-0"	613
✳ S2-E	42	#4	(4)	2'-9"	77
✳ S3-E	75	#4	(4)	4'-5"	221
S4-E	616	#4	(5)	2'-9"	1,132
U1-E	84	#4	(9)	17'-0"	954
U2-E	28	#4	(4)	11'-0"	206
✳ EPOXY COATED REINF. STEEL (LBS.)					99,378
REINF. STEEL (LBS.)					97,365

PROJECT NO. U-2524C

GUILFORD COUNTY

STATION: POT 407+73.35 -L-
= POT 29+32.06 -Y4-

SHEET 3 OF 8

NORTH CAROLINA PROFESSIONAL SEAL 28479 ENGINEER KEVIN G. BAILEY
5-30-13

STATE OF NORTH CAROLINA
DEPARTMENT OF TRANSPORTATION
RALEIGH

SUPERSTRUCTURE BILL OF MATERIALS

-LEFT LANE-

STV/ Ralph Whitehead Associates, Inc.
1000 West Morehead St., Ste. 200
Charlotte, NC 28208
NC License No. F-0991

REVISIONS								SHEET NO.
NO.	BY:	DATE:	NO.	BY:	DATE:			S-166
1			3					TOTAL SHEETS
2			4					836

DRAWN BY : ACA	DATE : 1-13	DESIGN ENGINEER OF RECORD: A. PETER	DATE : 5-13
CHECKED BY : AJP	DATE : 2-13		

5/30/2013 4:59:47 PM R:\station\Finals\Super Bill of Mats Sheet 3 of 8.dgn

REINFORCING BAR SCHEDULE
SPAN 15

MARK	NO.	SIZE	TYPE	LENGTH	WEIGHT
✳ A1-15	218	#5	STR.	60'-0"	13,642
✳ A2-15	54	#5	STR.	19'-9"	1,112
✳ A3-15	55	#5	STR.	22'-0"	1,262
✳ A4-15	55	#5	STR.	24'-4"	1,396
✳ A5-15	54	#5	STR.	26'-8"	1,502
A301-15	218	#5	STR.	60'-0"	13,642
A302-15	54	#5	STR.	19'-5"	1,094
A303-15	55	#5	STR.	21'-8"	1,243
A304-15	55	#5	STR.	24'-0"	1,377
A305-15	54	#5	STR.	26'-4"	1,483
✳ B1-15	189	#5	STR.	41'-0"	8,082
B101-15	240	#5	STR.	41'-0"	10,263
✳ G2-15	2	#5	STR.	38'-9"	81
✳ G3-15	2	#5	STR.	43'-4"	90
✳ J1-15	161	#4	12	1'-5"	152
✳ K1-15	12	#8	1	22'-5"	718
✳ K2-15	12	#8	1	24'-11"	798
✳ K3-15	4	#8	2	15'-0"	160
✳ K4-15	4	#8	2	16'-9"	179
✳ K5-15	14	#6	STR.	5'-7"	117
✳ K6-15	14	#6	STR.	6'-10"	144
✳ S1-15	91	#5	3	6'-0"	569
✳ S2-15	91	#4	4	2'-6"	152
✳ EPOXY COATED REINF. STEEL (LBS.)					30,156
REINF. STEEL (LBS.)					29,102

REINFORCING BAR SCHEDULE
SPAN 16

MARK	NO.	SIZE	TYPE	LENGTH	WEIGHT
✳ A1-16	122	#5	STR.	31'-1"	3,955
✳ A2-16	122	#5	STR.	33'-8"	4,284
✳ A3-16	122	#5	STR.	36'-3"	4,613
✳ A4-16	58	#5	STR.	37'-8"	2,279
✳ A5-16	4	#5	STR.	39'-10"	166
✳ A6-16	4	#5	STR.	38'-5"	160
✳ A7-16	4	#5	STR.	35'-5"	148
✳ A11-16	205	#5	STR.	32'-3"	6,896
✳ A12-16	1	#5	STR.	31'-8"	33
✳ A13-16	1	#5	STR.	28'-8"	30
✳ A14-16	1	#5	STR.	25'-7"	27
✳ A15-16	1	#5	STR.	22'-6"	23
✳ A16-16	1	#5	STR.	19'-6"	20
✳ A17-16	1	#5	STR.	16'-5"	17
✳ A18-16	1	#5	STR.	13'-4"	14
A301-16	122	#5	STR.	30'-9"	3,913
A302-16	122	#5	STR.	33'-4"	4,242
A303-16	122	#5	STR.	35'-11"	4,570
A304-16	58	#5	STR.	37'-4"	2,258
A305-16	4	#5	STR.	39'-6"	165
A306-16	4	#5	STR.	38'-1"	159
A307-16	4	#5	STR.	35'-1"	146
A311-16	205	#5	STR.	32'-3"	6,896
A312-16	1	#5	STR.	31'-8"	33
A313-16	1	#5	STR.	28'-8"	30
A314-16	1	#5	STR.	25'-7"	27
A315-16	1	#5	STR.	22'-6"	23
A316-16	1	#5	STR.	19'-6"	20
A317-16	1	#5	STR.	16'-5"	17
A318-16	1	#5	STR.	13'-4"	14

MARK	NO.	SIZE	TYPE	LENGTH	WEIGHT
✳ B1-16	237	#5	STR.	41'-0"	10,135
B101-16	159	#5	STR.	41'-0"	6,799
B102-16	129	#5	STR.	40'-9"	5,483
✳ G2-16	2	#5	STR.	43'-5"	91
✳ G3-16	1	#5	STR.	60'-0"	63
✳ G4-16	1	#5	10	12'-0"	13
✳ G5-16	1	#5	STR.	36'-0"	38
✳ J1-16	185	#4	12	1'-5"	175
✳ K1-16	8	#8	1	24'-11"	532
✳ K2-16	2	#8	1	21'-4"	114
✳ K3-16	10	#8	1	17'-9"	474
✳ K4-16	2	#8	1	24'-2"	129
✳ K5-16	6	#8	1	23'-5"	375
✳ K6-16	4	#8	2	13'-5"	143
✳ K71-16	2	#8	2	14'-3"	76
✳ K72-16	2	#8	2	15'-1"	81
✳ K8-16	4	#8	2	17'-0"	182
✳ K9-16	2	#8	2	13'-2"	70
✳ K10-16	2	#8	2	15'-9"	84
✳ K11-16	12	#6	STR.	6'-10"	123
✳ K12-16	12	#6	STR.	3'-3"	59
✳ K13-16	10	#6	STR.	6'-1"	91
✳ K14-16	2	#6	STR.	7'-5"	22
✳ S1-16	105	#5	3	6'-0"	657
✳ S2-16	104	#4	4	2'-6"	174
✳ S3-16	8	#4	4	2'-10"	15
✳ S4-16	2	#5	3	6'-4"	13
✳ S5-16	3	#5	3	6'-10"	21
✳ S6-16	2	#5	3	7'-4"	15
✳ S10-16	46	#5	11	5'-5"	260
✳ EPOXY COATED REINF. STEEL (LBS.)					36,630
REINF. STEEL (LBS.)					34,795

REINFORCING BAR SCHEDULE
UNIT F - SPANS 17-20

MARK	NO.	SIZE	TYPE	LENGTH	WEIGHT
✳ A1-F	885	#5	STR.	43'-0"	39,691
✳ A2-F	885	#5	STR.	22'-6"	20,769
A301-F	885	#5	STR.	43'-0"	39,691
A302-F	885	#5	STR.	22'-2"	20,461
✳ B1-F	176	#5	STR.	47'-5"	8,704
✳ B2-F	132	#6	STR.	60'-0"	11,896
✳ B3-F	176	#5	STR.	33'-9"	6,195
✳ B10-F	123	#7	STR.	50'-0"	12,571
✳ B11-F	123	#7	STR.	40'-0"	10,056
B101-F	56	#6	STR.	47'-6"	3,995
B102-F	220	#5	STR.	47'-1"	10,804
B103-F	207	#7	STR.	60'-0"	25,386
B104-F	56	#6	STR.	33'-11"	2,853
B105-F	220	#5	STR.	33'-3"	7,630
B110-F	18	#7	STR.	60'-0"	2,208
✳ G1-F	17	#5	7	3'-8"	65
✳ G2-F	2	#5	STR.	32'-9"	68
✳ J1-F	64	#4	12	1'-5"	61
✳ K1-F	8	#8	1	24'-10"	530
✳ K2-F	8	#8	1	24'-10"	530
✳ K3-F	4	#8	2	17'-0"	182
✳ K4-F	4	#8	2	16'-10"	180
✳ K5-F	10	#6	STR.	6'-10"	103
✳ K6-F	15	#6	STR.	9'-6"	214
✳ K7-F	6	#6	STR.	3'-11"	35
K100-F	21	#4	STR.	53'-9"	754
K120-F	60	#4	STR.	6'-10"	274
K121-F	150	#4	STR.	9'-10"	985
✳ S1-F	80	#5	3	6'-0"	501
✳ S2-F	48	#4	4	2'-6"	80
✳ S3-F	64	#4	4	3'-10"	164
S4-F	840	#4	5	2'-9"	1,543
U1-F	120	#4	9	16'-4"	1,309
U2-F	30	#4	4	10'-4"	207
✳ EPOXY COATED REINF. STEEL (LBS.)					112,595
REINF. STEEL (LBS.)					118,100

REINFORCING BAR SCHEDULE
UNIT G - SPANS 21-23

MARK	NO.	SIZE	TYPE	LENGTH	WEIGHT
✳ A1-G	1558	#5	STR.	43'-0"	69,875
✳ A2-G	1558	#5	STR.	22'-6"	36,562
A301-G	1558	#5	STR.	43'-0"	69,875
A302-G	1558	#5	STR.	22'-2"	36,021
✳ B1-G	264	#5	STR.	49'-4"	13,584
✳ B2-G	756	#6	STR.	55'-0"	62,453
✳ B3-G	132	#5	STR.	42'-0"	5,782
B101-G	1120	#5	STR.	53'-1"	62,010
✳ G1-G	32	#5	7	3'-8"	122
✳ K1-G	24	#5	1	15'-10"	396
✳ K3-G	12	#5	2	11'-2"	140
✳ S6-G	128	#4	6	5'-0"	428
✳ EPOXY COATED REINF. STEEL (LBS.)					189,342
REINF. STEEL (LBS.)					167,906

PROJECT NO. U-2524C

GUILFORD COUNTY

STATION: POT 407+73.35 -L-
= POT 29+32.06 -Y4-

SHEET 4 OF 8

NORTH CAROLINA PROFESSIONAL SEAL 28479 ENGINEER KEVIN G. BAILEY
5-30-13

STATE OF NORTH CAROLINA
DEPARTMENT OF TRANSPORTATION
RALEIGH

SUPERSTRUCTURE BILL OF MATERIALS

-LEFT LANE-

REVISIONS							SHEET NO.
NO.	BY:	DATE:	NO.	BY:	DATE:		S-167
1			3				TOTAL SHEETS
2			4				836

STV / Ralph Whitehead Associates, Inc.
1000 West Morehead St., Ste. 200
Charlotte, NC 28208
NC License No. F-0991

DRAWN BY : ACA DATE : 1-13
CHECKED BY : AJP DATE : 2-12
DESIGN ENGINEER OF RECORD: A. PETER DATE : 5-13

5/30/2013 4:59:51 PM R:\ustation\Finals\Super Bill of Mats Sheet 4 of 8.dgn

REINFORCING BAR SCHEDULE
SPAN 24

MARK	NO.	SIZE	TYPE	LENGTH	WEIGHT	MARK	NO.	SIZE	TYPE	LENGTH	WEIGHT
✳ A1-24	297	#5	STR.	43'-0"	13,320	A417-24	1	#5	STR.	17'-2"	18
✳ A2-24	297	#5	STR.	22'-6"	6,970	A418-24	1	#5	STR.	16'-7"	17
						A419-24	1	#5	STR.	16'-1"	17
✳ A101-24	10	#5	STR.	32'-2"	335	A420-24	1	#5	STR.	15'-6"	16
✳ A102-24	10	#5	STR.	30'-9"	321	A421-24	1	#5	STR.	14'-11"	16
✳ A103-24	10	#5	STR.	29'-4"	306	A422-24	1	#5	STR.	14'-5"	15
✳ A104-24	10	#5	STR.	28'-0"	292	A423-24	1	#5	STR.	13'-10"	14
✳ A105-24	10	#5	STR.	26'-7"	277	A424-24	1	#5	STR.	13'-3"	14
✳ A106-24	10	#5	STR.	25'-2"	262	A425-24	1	#5	STR.	12'-8"	13
✳ A107-24	10	#5	STR.	23'-9"	248	A426-24	1	#5	STR.	12'-2"	13
✳ A108-24	10	#5	STR.	22'-4"	233	A427-24	1	#5	STR.	11'-7"	12
✳ A109-24	10	#5	STR.	21'-0"	219	A428-24	1	#5	STR.	11'-0"	11
✳ A110-24	10	#5	STR.	19'-7"	204	A429-24	1	#5	STR.	10'-6"	11
✳ A111-24	10	#5	STR.	18'-2"	189	A430-24	1	#5	STR.	9'-11"	10
✳ A112-24	10	#5	STR.	16'-9"	175	A431-24	1	#5	STR.	9'-4"	10
✳ A113-24	10	#5	STR.	15'-4"	160	A432-24	1	#5	STR.	8'-10"	9
✳ A114-24	10	#5	STR.	14'-0"	146	A433-24	1	#5	STR.	8'-3"	9
✳ A115-24	10	#5	STR.	12'-7"	131	A434-24	1	#5	STR.	7'-8"	8
✳ A116-24	10	#5	STR.	11'-2"	116	A435-24	1	#5	STR.	7'-2"	7
✳ A117-24	1	#5	STR.	15'-0"	16	A436-24	1	#5	STR.	6'-7"	7
✳ A118-24	1	#5	STR.	14'-5"	15	A437-24	6	#5	STR.	6'-2"	39
✳ A119-24	1	#5	STR.	13'-11"	15	A438-24	5	#5	STR.	5'-2"	27
✳ A120-24	1	#5	STR.	13'-4"	14						
✳ A121-24	1	#5	STR.	12'-9"	13	✳ B1-24	28	#5	STR.	49'-6"	1,446
✳ A122-24	1	#5	STR.	12'-3"	13	✳ B2-24	24	#5	STR.	47'-6"	1,189
✳ A123-24	1	#5	STR.	11'-8"	12	✳ B3-24	24	#5	STR.	45'-6"	1,139
✳ A124-24	1	#5	STR.	11'-1"	12	✳ B4-24	24	#5	STR.	43'-6"	1,089
✳ A125-24	1	#5	STR.	10'-6"	11	✳ B5-24	24	#5	STR.	42'-0"	1,051
✳ A126-24	1	#5	STR.	10'-0"	10	✳ B6-24	24	#5	STR.	40'-0"	1,001
✳ A127-24	1	#5	STR.	9'-5"	10	✳ B7-24	28	#5	STR.	38'-0"	1,110
✳ A128-24	1	#5	STR.	8'-10"	9						
✳ A129-24	1	#5	STR.	8'-4"	9	B101-24	20	#5	STR.	49'-0"	1,022
✳ A130-24	1	#5	STR.	7'-9"	8	B102-24	56	#5	STR.	48'-0"	2,804
✳ A131-24	1	#5	STR.	7'-2"	7	B103-24	56	#5	STR.	46'-0"	2,687
✳ A132-24	1	#5	STR.	6'-8"	7	B104-24	56	#5	STR.	43'-6"	2,541
✳ A133-24	1	#5	STR.	6'-1"	6	B105-24	56	#5	STR.	41'-0"	2,395
✳ A134-24	1	#5	STR.	5'-6"	6	B106-24	56	#5	STR.	39'-0"	2,278
✳ A135-24	1	#5	STR.	5'-0"	5	B107-24	20	#5	STR.	36'-6"	761
✳ A136-24	1	#5	STR.	4'-5"	5						
✳ A137-24	4	#5	STR.	4'-0"	17	✳ G1-24	17	#5	7	3'-8"	65
✳ A138-24	3	#5	STR.	3'-0"	9	✳ G2-24	2	#5	STR.	41'-11"	87
✳ A139-24	1	#6	STR.	20'-3"	30						
✳ A140-24	1	#6	STR.	21'-3"	32	✳ J1-24	82	#4	12	1'-5"	78
✳ A141-24	1	#6	STR.	22'-3"	33						
						✳ K1-24	12	#5	1	15'-10"	198
A301-24	297	#5	STR.	43'-0"	13,320	✳ K2-24	12	#5	1	20'-0"	250
A302-24	297	#5	STR.	22'-2"	6,867	✳ K3-24	6	#5	2	11'-2"	70
						✳ K4-24	6	#5	2	12'-0"	75
A401-24	10	#5	STR.	32'-4"	337						
A402-24	10	#5	STR.	30'-11"	322	✳ S6-24	64	#4	6	5'-0"	214
A403-24	10	#5	STR.	29'-6"	308	✳ S7-24	55	#4	6	5'-6"	202
A404-24	10	#5	STR.	28'-2"	294						
A405-24	10	#5	STR.	26'-9"	279						
A406-24	10	#5	STR.	25'-4"	264						
A407-24	10	#5	STR.	23'-11"	249						
A408-24	10	#5	STR.	22'-6"	235						
A409-24	10	#5	STR.	21'-2"	221						
A410-24	10	#5	STR.	19'-9"	206						
A411-24	10	#5	STR.	18'-4"	191						
A412-24	10	#5	STR.	16'-11"	176						
A413-24	10	#5	STR.	15'-6"	162						
A414-24	10	#5	STR.	14'-2"	148						
A415-24	10	#5	STR.	12'-9"	133	✳ EPOXY COATED REINF. STEEL (LBS.)					33,492
A416-24	10	#5	STR.	11'-4"	118	REINF. STEEL (LBS.)					38,631

REINFORCING BAR SCHEDULE
FOR UNIT H - SPANS 25 & 26

MARK	NO.	SIZE	TYPE	LENGTH	WEIGHT	MARK	NO.	SIZE	TYPE	LENGTH	WEIGHT	MARK	NO.	SIZE	TYPE	LENGTH	WEIGHT
✳ A1-H	895	#5	STR.	43'-0"	40,140	✳ A161-H	1	#5	STR.	12'-0"	13	A442-H	10	#5	STR.	31'-11"	333
✳ A2-H	895	#5	STR.	22'-6"	21,003	✳ A162-H	1	#5	STR.	11'-4"	12	A443-H	10	#5	STR.	30'-2"	315
						✳ A163-H	1	#5	STR.	10'-7"	11	A444-H	10	#5	STR.	28'-5"	296
✳ A101-H	10	#5	STR.	32'-2"	335	✳ A164-H	1	#5	STR.	9'-11"	10	A445-H	10	#5	STR.	26'-8"	278
✳ A102-H	10	#5	STR.	30'-9"	321	✳ A165-H	1	#5	STR.	9'-3"	10	A446-H	10	#5	STR.	24'-11"	260
✳ A103-H	10	#5	STR.	29'-4"	306	✳ A166-H	1	#5	STR.	8'-6"	9	A447-H	10	#5	STR.	23'-2"	242
✳ A104-H	10	#5	STR.	28'-0"	292	✳ A167-H	1	#5	STR.	7'-10"	8	A448-H	10	#5	STR.	21'-5"	223
✳ A105-H	10	#5	STR.	26'-7"	277	✳ A168-H	1	#5	STR.	7'-1"	7	A449-H	10	#5	STR.	19'-8"	205
✳ A106-H	10	#5	STR.	25'-2"	262	✳ A169-H	1	#5	STR.	6'-5"	7	A450-H	10	#5	STR.	17'-11"	187
✳ A107-H	10	#5	STR.	23'-9"	248	✳ A170-H	1	#5	STR.	5'-8"	6	A451-H	10	#5	STR.	16'-2"	169
✳ A108-H	10	#5	STR.	22'-4"	233	✳ A171-H	1	#5	STR.	5'-0"	5	A452-H	10	#5	STR.	14'-5"	150
✳ A109-H	10	#5	STR.	21'-0"	219	✳ A172-H	1	#5	STR.	4'-3"	4	A453-H	10	#5	STR.	12'-8"	132
✳ A110-H	10	#5	STR.	19'-7"	204	✳ A173-H	3	#5	STR.	4'-0"	13	A454-H	1	#5	STR.	19'-2"	20
✳ A111-H	10	#5	STR.	18'-2"	189	✳ A174-H	2	#5	STR.	3'-0"	6	A455-H	1	#5	STR.	18'-3"	19
✳ A112-H	10	#5	STR.	16'-9"	175	✳ A175-H	1	#6	STR.	18'-5"	28	A456-H	1	#5	STR.	17'-5"	18
✳ A113-H	10	#5	STR.	15'-4"	160	✳ A176-H	1	#6	STR.	19'-5"	29	A457-H	1	#5	STR.	16'-11"	18
✳ A114-H	10	#5	STR.	14'-0"	146	✳ A177-H	1	#6	STR.	20'-5"	31	A458-H	1	#5	STR.	16'-3"	17
✳ A115-H	10	#5	STR.	12'-7"	131							A459-H	1	#5	STR.	15'-6"	16
✳ A116-H	10	#5	STR.	11'-2"	116	A301-H	895	#5	STR.	43'-0"	40,140	A460-H	1	#5	STR.	14'-10"	15
✳ A117-H	1	#5	STR.	15'-0"	16	A302-H	895	#5	STR.	22'-2"	20,692	A461-H	1	#5	STR.	14'-1"	15
✳ A118-H	1	#5	STR.	14'-5"	15							A462-H	1	#5	STR.	13'-5"	14
✳ A119-H	1	#5	STR.	13'-11"	15	A401-H	10	#5	STR.	32'-4"	337	A463-H	1	#5	STR.	12'-8"	13
✳ A120-H	1	#5	STR.	13'-4"	14	A402-H	10	#5	STR.	30'-11"	322	A464-H	1	#5	STR.	11'-12"	13
✳ A121-H	1	#5	STR.	12'-9"	13	A403-H	10	#5	STR.	29'-6"	308	A465-H	1	#5	STR.	11'-4"	12
✳ A122-H	1	#5	STR.	12'-3"	13	A404-H	10	#5	STR.	28'-2"	294	A466-H	1	#5	STR.	10'-7"	11
✳ A123-H	1	#5	STR.	11'-8"	12	A405-H	10	#5	STR.	26'-9"	279	A467-H	1	#5	STR.	9'-11"	10
✳ A124-H	1	#5	STR.	11'-1"	12	A406-H	10	#5	STR.	25'-4"	264	A468-H	1	#5	STR.	9'-2"	10
✳ A125-H	1	#5	STR.	10'-6"	11	A407-H	10	#5	STR.	23'-11"	249	A469-H	1	#5	STR.	8'-6"	9
✳ A126-H	1	#5	STR.	10'-0"	10	A408-H	10	#5	STR.	22'-6"	235	A470-H	1	#5	STR.	7'-9"	8
✳ A127-H	1	#5	STR.	9'-5"	10	A409-H	10	#5	STR.	21'-2"	221	A471-H	1	#5	STR.	7'-1"	7
✳ A128-H	1	#5	STR.	8'-10"	9	A410-H	10	#5	STR.	19'-9"	206	A472-H	1	#5	STR.	6'-4"	7
✳ A129-H	1	#5	STR.	8'-4"	9	A411-H	10	#5	STR.	18'-4"	191	A473-H	4	#5	STR.	6'-0"	25
✳ A130-H	1	#5	STR.	7'-9"	8	A412-H	10	#5	STR.	16'-11"	176	A474-H	4	#5	STR.	5'-0"	21
✳ A131-H	1	#5	STR.	7'-2"	7	A413-H	10	#5	STR.	15'-6"	162						
✳ A132-H	1	#5	STR.	6'-8"	7	A414-H	10	#5	STR.	14'-2"	148	✳ B1-H	264	#5	STR.	53'-0"	14,594
✳ A133-H	1	#5	STR.	6'-1"	6	A415-H	10	#5	STR.	12'-9"	133	✳ B2-H	378	#6	STR.	55'-0"	31,227
✳ A134-H	1	#5	STR.	5'-6"	6	A416-H	10	#5	STR.	11'-4"	118						
✳ A135-H	1	#5	STR.	5'-0"	5	A417-H	1	#5	STR.	17'-2"	18	B101-H	720	#5	STR.	53'-0"	39,801
✳ A136-H	1	#5	STR.	4'-5"	5	A418-H	1	#5	STR.	16'-7"	17						
✳ A137-H	4	#5	STR.	4'-0"	17	A419-H	1	#5	STR.	16'-1"	17	✳ G1-H	18	#5	7	4'-0"	75
✳ A138-H	3	#5	STR.	3'-0"	9	A420-H	1	#5	STR.	15'-6"	16	✳ G2-H	2	#5	STR.	43'-0"	90
✳ A139-H	1	#6	STR.	20'-3"	30	A421-H	1	#5	STR.	14'-11"	16						
✳ A140-H	1	#6	STR.	21'-3"	32	A422-H	1	#5	STR.	14'-5"	15	✳ J1-H	82	#4	12	1'-5"	78
✳ A141-H	1	#6	STR.	22'-3"	33	A423-H	1	#5	STR.	13'-10"	14						
						A424-H	1	#5	STR.	13'-3"	14	✳ K1-H	12	#5	1	20'-3"	253
✳ A142-H	10	#5	STR.	31'-11"	333	A425-H	1	#5	STR.	12'-8"	13	✳ K2-H	12	#5	1	19'-1"	239
✳ A143-H	10	#5	STR.	30'-2"	315	A426-H	1	#5	STR.	12'-2"	13	✳ K3-H	6	#5	2	14'-4"	90
✳ A144-H	10	#5	STR.	28'-5"	296	A427-H	1	#5	STR.	11'-7"	12	✳ K4-H	6	#5	2	13'-7"	85
✳ A145-H	10	#5	STR.	26'-8"	278	A428-H	1	#5	STR.	11'-0"	11						
✳ A146-H	10	#5	STR.	24'-11"	260	A429-H	1	#5	STR.	10'-6"	11	✳ S6-H	76	#4	6	6'-7"	334
✳ A147-H	10	#5	STR.	23'-2"	242	A430-H	1	#5	STR.	9'-11"	10	✳ S7-H	55	#4	6	6'-4"	233
✳ A148-H	10	#5	STR.	21'-5"	223	A431-H	1	#5	STR.	9'-4"	10						
✳ A149-H	10	#5	STR.	19'-8"	205	A432-H	1	#5	STR.	8'-10"	9						
✳ A150-H	10	#5	STR.	17'-11"	187	A433-H	1	#5	STR.	8'-3"	9						
✳ A151-H	10	#5	STR.	16'-2"	169	A434-H	1	#5	STR.	7'-8"	8						
✳ A152-H	10	#5	STR.	14'-5"	150	A435-H	1	#5	STR.	7'-2"	7						
✳ A153-H	10	#5	STR.	12'-8"	132	A436-H	1	#5	STR.	6'-7"	7						
✳ A154-H	1	#5	STR.	19'-2"	20	A437-H	6	#5	STR.	6'-2"	39						
✳ A155-H	1	#5	STR.	18'-3"	19	A438-H	5	#5	STR.	5'-2"	27						
✳ A156-H	1	#5	STR.	17'-5"	18												
✳ A157-H	1	#5	STR.	14'-10"	15												
✳ A158-H	1	#5	STR.	14'-2"	15												
✳ A159-H	1	#5	STR.	13'-5"	14												
✳ A160-H	1	#5	STR.	12'-9"	13							✳ EPOXY COATED REINF. STEEL (LBS.)					115,492
												REINF. STEEL (LBS.)					107,677

PROJECT NO. U-2524C
GUILFORD COUNTY
STATION: POT 407+73.35 -L-
= POT 29+32.06 -Y4-

SHEET 5 OF 8

STATE OF NORTH CAROLINA
DEPARTMENT OF TRANSPORTATION
RALEIGH

SUPERSTRUCTURE BILL OF MATERIALS

-LEFT LANE-

NORTH CAROLINA PROFESSIONAL SEAL 28479 ENGINEER KEVIN G. BAILEY
6-7-13

DRAWN BY : ACA DATE : 1-13
CHECKED BY : AJP DATE : 2-13

DESIGN ENGINEER OF RECORD: A. PETER DATE : 5-13

STV/ Ralph Whitehead Associates, Inc.
1000 West Morehead St., Ste. 200
Charlotte, NC 28208
NC License No. F-0991

REVISIONS								SHEET NO.
NO.	BY:	DATE:	NO.	BY:	DATE:			S-168
1			3					TOTAL SHEETS
2			4					83C

6/7/2013 10:33:53 AM R:\ustation\Finals\Super Bill of Mats Sheet 5 of 8.dgn

REINFORCING BAR SCHEDULE
SPAN 24

MARK	NO.	SIZE	TYPE	LENGTH	WEIGHT	MARK	NO.	SIZE	TYPE	LENGTH	WEIGHT
✳ A1-24	297	#5	STR.	43'-0"	13,320	A417-24	1	#5	STR.	17'-2"	18
✳ A2-24	297	#5	STR.	22'-6"	6,970	A418-24	1	#5	STR.	16'-7"	17
						A419-24	1	#5	STR.	16'-1"	17
✳ A101-24	10	#5	STR.	32'-2"	335	A420-24	1	#5	STR.	15'-6"	16
✳ A102-24	10	#5	STR.	30'-9"	321	A421-24	1	#5	STR.	14'-11"	16
✳ A103-24	10	#5	STR.	29'-4"	306	A422-24	1	#5	STR.	14'-5"	15
✳ A104-24	10	#5	STR.	28'-0"	292	A423-24	1	#5	STR.	13'-10"	14
✳ A105-24	10	#5	STR.	26'-7"	277	A424-24	1	#5	STR.	13'-3"	14
✳ A106-24	10	#5	STR.	25'-2"	262	A425-24	1	#5	STR.	12'-8"	13
✳ A107-24	10	#5	STR.	23'-9"	248	A426-24	1	#5	STR.	12'-2"	13
✳ A108-24	10	#5	STR.	22'-4"	233	A427-24	1	#5	STR.	11'-7"	12
✳ A109-24	10	#5	STR.	21'-0"	219	A428-24	1	#5	STR.	11'-0"	11
✳ A110-24	10	#5	STR.	19'-7"	204	A429-24	1	#5	STR.	10'-6"	11
✳ A111-24	10	#5	STR.	18'-2"	189	A430-24	1	#5	STR.	9'-11"	10
✳ A112-24	10	#5	STR.	16'-9"	175	A431-24	1	#5	STR.	9'-4"	10
✳ A113-24	10	#5	STR.	15'-4"	160	A432-24	1	#5	STR.	8'-10"	9
✳ A114-24	10	#5	STR.	14'-0"	146	A433-24	1	#5	STR.	8'-3"	9
✳ A115-24	10	#5	STR.	12'-7"	131	A434-24	1	#5	STR.	7'-8"	8
✳ A116-24	10	#5	STR.	11'-2"	116	A435-24	1	#5	STR.	7'-2"	7
✳ A117-24	1	#5	STR.	15'-0"	16	A436-24	1	#5	STR.	6'-7"	7
✳ A118-24	1	#5	STR.	14'-5"	15	A437-24	6	#5	STR.	6'-2"	39
✳ A119-24	1	#5	STR.	13'-11"	15	A438-24	5	#5	STR.	5'-2"	27
✳ A120-24	1	#5	STR.	13'-4"	14						
✳ A121-24	1	#5	STR.	12'-9"	13	✳ B1-24	28	#5	STR.	49'-6"	1,446
✳ A122-24	1	#5	STR.	12'-3"	13	✳ B2-24	24	#5	STR.	47'-6"	1,189
✳ A123-24	1	#5	STR.	11'-8"	12	✳ B3-24	24	#5	STR.	45'-6"	1,139
✳ A124-24	1	#5	STR.	11'-1"	12	✳ B4-24	24	#5	STR.	43'-6"	1,089
✳ A125-24	1	#5	STR.	10'-6"	11	✳ B5-24	24	#5	STR.	42'-0"	1,051
✳ A126-24	1	#5	STR.	10'-0"	10	✳ B6-24	24	#5	STR.	40'-0"	1,001
✳ A127-24	1	#5	STR.	9'-5"	10	✳ B7-24	28	#5	STR.	38'-0"	1,110
✳ A128-24	1	#5	STR.	8'-10"	9						
✳ A129-24	1	#5	STR.	8'-4"	9	B101-B	20	#5	STR.	49'-0"	1,022
✳ A130-24	1	#5	STR.	7'-9"	8	B102-B	56	#5	STR.	48'-0"	2,804
✳ A131-24	1	#5	STR.	7'-2"	7	B103-B	56	#5	STR.	46'-0"	2,687
✳ A132-24	1	#5	STR.	6'-8"	7	B104-B	56	#5	STR.	43'-6"	2,541
✳ A133-24	1	#5	STR.	6'-1"	6	B105-B	56	#5	STR.	41'-0"	2,395
✳ A134-24	1	#5	STR.	5'-6"	6	B106-B	56	#5	STR.	39'-0"	2,278
✳ A135-24	1	#5	STR.	5'-0"	5	B107-B	20	#5	STR.	36'-6"	761
✳ A136-24	1	#5	STR.	4'-5"	5						
✳ A137-24	4	#5	STR.	4'-0"	17	✳ G1-24	17	#5	7	3'-8"	65
✳ A138-24	3	#5	STR.	3'-0"	9	✳ G2-24	2	#5	STR.	41'-11"	87
✳ A139-24	1	#6	STR.	20'-3"	30						
✳ A140-24	1	#6	STR.	21'-3"	32	✳ J1-24	82	#4	12	1'-5"	78
✳ A141-24	1	#6	STR.	22'-3"	33						
						✳ K1-24	12	#5	1	15'-10"	198
A301-24	297	#5	STR.	43'-0"	13,320	✳ K2-24	12	#5	1	20'-0"	250
A302-24	297	#5	STR.	22'-2"	6,867	✳ K3-24	6	#5	2	11'-2"	70
						✳ K4-24	6	#5	2	12'-0"	75
A401-24	10	#5	STR.	32'-4"	337						
A402-24	10	#5	STR.	30'-11"	322	✳ S6-24	64	#4	6	5'-0"	214
A403-24	10	#5	STR.	29'-6"	308	✳ S7-24	55	#4	6	5'-6"	202
A404-24	10	#5	STR.	28'-2"	294						
A405-24	10	#5	STR.	26'-9"	279						
A406-24	10	#5	STR.	25'-4"	264						
A407-24	10	#5	STR.	23'-11"	249						
A408-24	10	#5	STR.	22'-6"	235						
A409-24	10	#5	STR.	21'-2"	221						
A410-24	10	#5	STR.	19'-9"	206						
A411-24	10	#5	STR.	18'-4"	191						
A412-24	10	#5	STR.	16'-11"	176						
A413-24	10	#5	STR.	15'-6"	162						
A414-24	10	#5	STR.	14'-2"	148						
A415-24	10	#5	STR.	12'-9"	133	✳ EPOXY COATED REINF. STEEL (LBS.)					33,492
A416-24	10	#5	STR.	11'-4"	118	REINF. STEEL (LBS.)					38,631

REINFORCING BAR SCHEDULE
FOR UNIT H - SPANS 25 & 26

MARK	NO.	SIZE	TYPE	LENGTH	WEIGHT	MARK	NO.	SIZE	TYPE	LENGTH	WEIGHT	MARK	NO.	SIZE	TYPE	LENGTH	WEIGHT
✳ A1-H	895	#5	STR.	43'-0"	40,140	✳ A161-H	1	#5	STR.	12'-0"	13	A442-H	10	#5	STR.	31'-11"	333
✳ A2-H	895	#5	STR.	22'-6"	21,003	✳ A162-H	1	#5	STR.	11'-4"	12	A443-H	10	#5	STR.	30'-2"	315
						✳ A163-H	1	#5	STR.	10'-7"	11	A444-H	10	#5	STR.	28'-5"	296
✳ A101-H	10	#5	STR.	32'-2"	335	✳ A164-H	1	#5	STR.	9'-11"	10	A445-H	10	#5	STR.	26'-8"	278
✳ A102-H	10	#5	STR.	30'-9"	321	✳ A165-H	1	#5	STR.	9'-3"	10	A446-H	10	#5	STR.	24'-11"	260
✳ A103-H	10	#5	STR.	29'-4"	306	✳ A166-H	1	#5	STR.	8'-6"	9	A447-H	10	#5	STR.	23'-2"	242
✳ A104-H	10	#5	STR.	28'-0"	292	✳ A167-H	1	#5	STR.	7'-10"	8	A448-H	10	#5	STR.	21'-5"	223
✳ A105-H	10	#5	STR.	26'-7"	277	✳ A168-H	1	#5	STR.	7'-1"	7	A449-H	10	#5	STR.	19'-8"	205
✳ A106-H	10	#5	STR.	25'-2"	262	✳ A169-H	1	#5	STR.	6'-5"	7	A450-H	10	#5	STR.	17'-11"	187
✳ A107-H	10	#5	STR.	23'-9"	248	✳ A170-H	1	#5	STR.	5'-8"	6	A451-H	10	#5	STR.	16'-2"	169
✳ A108-H	10	#5	STR.	22'-4"	233	✳ A171-H	1	#5	STR.	5'-0"	5	A452-H	10	#5	STR.	14'-5"	150
✳ A109-H	10	#5	STR.	21'-0"	219	✳ A172-H	1	#5	STR.	4'-3"	4	A453-H	10	#5	STR.	12'-8"	132
✳ A110-H	10	#5	STR.	19'-7"	204	✳ A173-H	3	#5	STR.	4'-0"	13	A454-H	1	#5	STR.	19'-2"	20
✳ A111-H	10	#5	STR.	18'-2"	189	✳ A174-H	2	#5	STR.	3'-0"	6	A455-H	1	#5	STR.	18'-3"	19
✳ A112-H	10	#5	STR.	16'-9"	175	✳ A175-H	1	#6	STR.	18'-5"	28	A456-H	1	#5	STR.	17'-5"	18
✳ A113-H	10	#5	STR.	15'-4"	160	✳ A176-H	1	#6	STR.	19'-5"	29	A457-H	1	#5	STR.	16'-11"	18
✳ A114-H	10	#5	STR.	14'-0"	146	✳ A177-H	1	#6	STR.	20'-5"	31	A458-H	1	#5	STR.	16'-3"	17
✳ A115-H	10	#5	STR.	12'-7"	131							A459-H	1	#5	STR.	15'-6"	16
✳ A116-H	10	#5	STR.	11'-2"	116	A301-H	895	#5	STR.	43'-0"	40,140	A460-H	1	#5	STR.	14'-10"	15
✳ A117-H	1	#5	STR.	15'-0"	16	A302-H	895	#5	STR.	22'-2"	20,692	A461-H	1	#5	STR.	14'-1"	15
✳ A118-H	1	#5	STR.	14'-5"	15							A462-H	1	#5	STR.	13'-5"	14
✳ A119-H	1	#5	STR.	13'-11"	15	A401-H	10	#5	STR.	32'-4"	337	A463-H	1	#5	STR.	12'-8"	13
✳ A120-H	1	#5	STR.	13'-4"	14	A402-H	10	#5	STR.	30'-11"	322	A464-H	1	#5	STR.	11'-12"	13
✳ A121-H	1	#5	STR.	12'-9"	13	A403-H	10	#5	STR.	29'-6"	308	A465-H	1	#5	STR.	11'-4"	12
✳ A122-H	1	#5	STR.	12'-3"	13	A404-H	10	#5	STR.	28'-2"	294	A466-H	1	#5	STR.	10'-7"	11
✳ A123-H	1	#5	STR.	11'-8"	12	A405-H	10	#5	STR.	26'-9"	279	A467-H	1	#5	STR.	9'-11"	10
✳ A124-H	1	#5	STR.	11'-1"	12	A406-H	10	#5	STR.	25'-4"	264	A468-H	1	#5	STR.	9'-2"	10
✳ A125-H	1	#5	STR.	10'-6"	11	A407-H	10	#5	STR.	23'-11"	249	A469-H	1	#5	STR.	8'-6"	9
✳ A126-H	1	#5	STR.	10'-0"	10	A408-H	10	#5	STR.	22'-6"	235	A470-H	1	#5	STR.	7'-9"	8
✳ A127-H	1	#5	STR.	9'-5"	10	A409-H	10	#5	STR.	21'-2"	221	A471-H	1	#5	STR.	7'-1"	7
✳ A128-H	1	#5	STR.	8'-10"	9	A410-H	10	#5	STR.	19'-9"	206	A472-H	1	#5	STR.	6'-4"	7
✳ A129-H	1	#5	STR.	8'-4"	9	A411-H	10	#5	STR.	18'-4"	191	A473-H	4	#5	STR.	6'-0"	25
✳ A130-H	1	#5	STR.	7'-9"	8	A412-H	10	#5	STR.	16'-11"	176	A474-H	4	#5	STR.	5'-0"	21
✳ A131-H	1	#5	STR.	7'-2"	7	A413-H	10	#5	STR.	15'-6"	162						
✳ A132-H	1	#5	STR.	6'-8"	7	A414-H	10	#5	STR.	14'-2"	148	✳ B1-H	264	#5	STR.	53'-0"	14,594
✳ A133-H	1	#5	STR.	6'-1"	6	A415-H	10	#5	STR.	12'-9"	133	✳ B2-H	378	#6	STR.	55'-0"	31,227
✳ A134-H	1	#5	STR.	5'-6"	6	A416-H	10	#5	STR.	11'-4"	118						
✳ A135-H	1	#5	STR.	5'-0"	5	A417-H	1	#5	STR.	17'-2"	18	B101-H	720	#5	STR.	53'-0"	39,801
✳ A136-H	1	#5	STR.	4'-5"	5	A418-H	1	#5	STR.	16'-7"	17						
✳ A137-H	4	#5	STR.	4'-0"	17	A419-H	1	#5	STR.	16'-1"	17	✳ G1-H	18	#5	7	4'-0"	75
✳ A138-H	3	#5	STR.	3'-0"	9	A420-H	1	#5	STR.	15'-6"	16	✳ G2-H	2	#5	STR.	43'-0"	90
✳ A139-H	1	#6	STR.	20'-3"	30	A421-H	1	#5	STR.	14'-11"	16						
✳ A140-H	1	#6	STR.	21'-3"	32	A422-H	1	#5	STR.	14'-5"	15	✳ J1-H	82	#4	12	1'-5"	78
✳ A141-H	1	#6	STR.	22'-3"	33	A423-H	1	#5	STR.	13'-10"	14						
						A424-H	1	#5	STR.	13'-3"	14	✳ K1-H	12	#5	1	20'-3"	253
✳ A142-H	10	#5	STR.	31'-11"	333	A425-H	1	#5	STR.	12'-8"	13	✳ K2-H	12	#5	1	19'-1"	239
✳ A143-H	10	#5	STR.	30'-2"	315	A426-H	1	#5	STR.	12'-2"	13	✳ K3-H	6	#5	2	14'-4"	90
✳ A144-H	10	#5	STR.	28'-5"	296	A427-H	1	#5	STR.	11'-7"	12	✳ K4-H	6	#5	2	13'-7"	85
✳ A145-H	10	#5	STR.	26'-8"	278	A428-H	1	#5	STR.	11'-0"	11						
✳ A146-H	10	#5	STR.	24'-11"	260	A429-H	1	#5	STR.	10'-6"	11	✳ S6-H	76	#4	6	6'-7"	334
✳ A147-H	10	#5	STR.	23'-2"	242	A430-H	1	#5	STR.	9'-11"	10	✳ S7-H	55	#4	6	6'-4"	233
✳ A148-H	10	#5	STR.	21'-5"	223	A431-H	1	#5	STR.	9'-4"	10						
✳ A149-H	10	#5	STR.	19'-8"	205	A432-H	1	#5	STR.	8'-10"	9						
✳ A150-H	10	#5	STR.	17'-11"	187	A433-H	1	#5	STR.	8'-3"	9						
✳ A151-H	10	#5	STR.	16'-2"	169	A434-H	1	#5	STR.	7'-8"	8						
✳ A152-H	10	#5	STR.	14'-5"	150	A435-H	1	#5	STR.	7'-2"	7						
✳ A153-H	10	#5	STR.	12'-8"	132	A436-H	1	#5	STR.	6'-7"	7						
✳ A154-H	1	#5	STR.	19'-2"	20	A437-H	6	#5	STR.	6'-2"	39						
✳ A155-H	1	#5	STR.	18'-3"	19	A438-H	5	#5	STR.	5'-2"	27						
✳ A156-H	1	#5	STR.	17'-5"	18												
✳ A157-H	1	#5	STR.	14'-10"	15												
✳ A158-H	1	#5	STR.	14'-2"	15												
✳ A159-H	1	#5	STR.	13'-5"	14												
✳ A160-H	1	#5	STR.	12'-9"	13												
												✳ EPOXY COATED REINF. STEEL (LBS.)					115,492
												REINF. STEEL (LBS.)					107,677

PROJECT NO. U-2524C

GUILFORD COUNTY

STATION: POT 407+73.35 -L-
= POT 29+32.06 -Y4-

SHEET 5 OF 8

NORTH CAROLINA PROFESSIONAL SEAL 28479 ENGINEER KEVIN G. BAILEY
5-30-13

STATE OF NORTH CAROLINA
DEPARTMENT OF TRANSPORTATION
RALEIGH

SUPERSTRUCTURE BILL OF MATERIALS

-LEFT LANE-

REVISIONS							
NO.	BY:	DATE:	NO.	BY:	DATE:	SHEET NO.	S-168
1			3			TOTAL SHEETS	83
2			4				

STV / Ralph Whitehead Associates, Inc.
1000 West Morehead St., Ste. 200
Charlotte, NC 28208
NC License No. F-0991

DRAWN BY : ACA DATE : 1-13
CHECKED BY : AJP DATE : 2-13
DESIGN ENGINEER OF RECORD: A. PETER DATE : 5-13

5/30/2013 4:59:55 PM R:\ustation\Finals\Super Bill of Mats Sheet 5 of 8.dgn

REINFORCING BAR SCHEDULE
UNIT I - SPANS 27-30

MARK	NO.	SIZE	TYPE	LENGTH	WEIGHT	MARK	NO.	SIZE	TYPE	LENGTH	WEIGHT	MARK	NO.	SIZE	TYPE	LENGTH	WEIGHT
✳A1-I	748	#5	STR.	43'-0"	33,547	A301-I	748	#5	STR.	43'-0"	33,547	✳B1-I	132	#5	STR.	42'-2"	5,805
✳A2-I	748	#5	STR.	22'-6"	17,554	A302-I	748	#5	STR.	22'-1"	17,229	✳B2-I	132	#6	STR.	60'-0"	11,896
												✳B3-I	44	#5	STR.	46'-10"	2,149
✳A101-I	8	#5	STR.	32'-6"	271	A401-I	8	#5	STR.	32'-6"	271	✳B4-I	44	#6	STR.	37'-0"	2,445
✳A102-I	8	#5	STR.	30'-10"	257	A402-I	8	#5	STR.	30'-10"	257	✳B5-I	88	#5	STR.	35'-0"	3,212
✳A103-I	8	#5	STR.	29'-1"	243	A403-I	8	#5	STR.	29'-1"	243	✳B10-I	123	#7	STR.	40'-0"	10,056
✳A104-I	8	#5	STR.	27'-5"	229	A404-I	8	#5	STR.	27'-5"	229	✳B11-I	123	#7	STR.	30'-0"	7,542
✳A105-I	8	#5	STR.	25'-8"	214	A405-I	8	#5	STR.	25'-8"	214						
✳A106-I	8	#5	STR.	24'-0"	200	A406-I	8	#5	STR.	24'-0"	200	B101-I	256	#5	STR.	44'-10"	11,971
✳A107-I	8	#5	STR.	22'-3"	186	A407-I	8	#5	STR.	22'-3"	186	B102-I	192	#6	STR.	55'-0"	15,861
✳A108-I	8	#5	STR.	20'-7"	172	A408-I	8	#5	STR.	20'-7"	172	B103-I	64	#5	STR.	51'-0"	3,404
✳A109-I	8	#5	STR.	18'-10"	157	A409-I	8	#5	STR.	18'-10"	157	B104-I	128	#5	STR.	32'-9"	4,372
✳A110-I	8	#5	STR.	17'-2"	143	A410-I	8	#5	STR.	17'-2"	143	B110-I	18	#7	STR.	50'-0"	1,840
✳A111-I	8	#5	STR.	15'-5"	129	A411-I	8	#5	STR.	15'-5"	129						
✳A112-I	8	#5	STR.	13'-9"	115	A412-I	8	#5	STR.	13'-9"	115	✳G1-I	18	#5	7	4'-0"	75
✳A113-I	8	#5	STR.	12'-0"	100	A413-I	8	#5	STR.	12'-0"	100	✳G2-I	2	#5	STR.	35'-5"	74
✳A114-I	1	#5	STR.	16'-0"	17	A414-I	1	#5	STR.	18'-0"	19						
✳A115-I	1	#5	STR.	15'-2"	16	A415-I	1	#5	STR.	17'-2"	18	✳J1-I	69	#4	12	1'-5"	65
✳A116-I	1	#5	STR.	14'-3"	15	A416-I	1	#5	STR.	16'-3"	17						
✳A117-I	1	#5	STR.	13'-6"	14	A417-I	1	#5	STR.	15'-6"	16	✳K1-I	8	#8	1	29'-3"	625
✳A118-I	1	#5	STR.	12'-8"	13	A418-I	1	#5	STR.	14'-7"	15	✳K2-I	8	#8	1	26'-10"	573
✳A119-I	1	#5	STR.	11'-9"	12	A419-I	1	#5	STR.	13'-9"	14	✳K3-I	2	#8	2	18'-3"	97
✳A120-I	1	#5	STR.	10'-11"	11	A420-I	1	#5	STR.	12'-11"	13	✳K4-I	4	#8	2	17'-2"	183
✳A121-I	1	#5	STR.	10'-1"	11	A421-I	1	#5	STR.	12'-1"	13	✳K5-I	2	#8	2	19'-9"	105
✳A122-I	1	#5	STR.	9'-3"	10	A422-I	1	#5	STR.	11'-3"	12	✳K6-I	5	#6	STR.	12'-8"	95
✳A123-I	1	#5	STR.	8'-5"	9	A423-I	1	#5	STR.	10'-4"	11	✳K7-I	5	#6	STR.	11'-7"	87
✳A124-I	1	#5	STR.	7'-6"	8	A424-I	1	#5	STR.	9'-6"	10	✳K8-I	5	#6	STR.	10'-6"	79
✳A125-I	1	#5	STR.	6'-9"	7	A425-I	1	#5	STR.	8'-9"	9	✳K9-I	5	#6	STR.	9'-10"	74
✳A126-I	1	#5	STR.	5'-10"	6	A426-I	1	#5	STR.	7'-10"	8	✳K10-I	5	#6	STR.	9'-1"	68
✳A127-I	1	#5	STR.	5'-0"	5	A427-I	1	#5	STR.	7'-0"	7	✳K11-I	5	#6	STR.	8'-4"	63
✳A128-I	1	#5	STR.	4'-2"	4	A428-I	1	#5	STR.	6'-2"	6	✳K31-I	3	#6	STR.	3'-2"	14
✳A129-I	2	#5	STR.	3'-9"	8	A429-I	4	#5	STR.	5'-3"	22	✳K51-I	1	#6	STR.	3'-2"	5
✳A130-I	2	#5	STR.	3'-0"	6	A430-I	3	#5	STR.	4'-0"	13	✳K52-I	1	#6	STR.	4'-2"	6
✳A131-I	1	#6	STR.	20'-0"	30							✳K53-I	1	#6	STR.	5'-2"	8
✳A132-I	1	#6	STR.	21'-0"	32	A434-I	6	#5	STR.	32'-2"	201						
✳A133-I	1	#6	STR.	22'-0"	33	A435-I	6	#5	STR.	30'-3"	189	K100-I	28	#4	8	15'-9"	295
						A436-I	6	#5	STR.	28'-5"	178	K101-I	28	#4	8	15'-3"	285
✳A134-I	6	#5	STR.	32'-1"	201	A437-I	6	#5	STR.	26'-6"	166	K102-I	28	#4	8	15'-3"	285
✳A135-I	6	#5	STR.	30'-2"	189	A438-I	6	#5	STR.	24'-8"	154	K103-I	14	#4	10	7'-10"	73
✳A136-I	6	#5	STR.	28'-4"	177	A439-I	6	#5	STR.	22'-9"	142	K104-I	14	#4	10	7'-7"	71
✳A137-I	6	#5	STR.	26'-5"	165	A440-I	6	#5	STR.	20'-11"	131	K105-I	14	#4	10	7'-7"	71
✳A138-I	6	#5	STR.	24'-7"	154	A441-I	6	#5	STR.	19'-0"	119	K120-I	20	#4	STR.	8'-4"	111
✳A139-I	6	#5	STR.	22'-8"	142	A442-I	6	#5	STR.	17'-1"	107	K121-I	50	#4	STR.	11'-9"	392
✳A140-I	6	#5	STR.	20'-10"	130	A443-I	6	#5	STR.	15'-3"	95	K122-I	20	#4	STR.	8'-2"	109
✳A141-I	6	#5	STR.	18'-11"	118	A444-I	6	#5	STR.	13'-4"	83	K123-I	50	#4	STR.	11'-6"	384
✳A142-I	6	#5	STR.	17'-0"	106	A445-I	1	#5	STR.	20'-6"	21	K124-I	20	#4	STR.	7'-11"	106
✳A143-I	6	#5	STR.	15'-2"	95	A446-I	1	#5	STR.	19'-3"	20	K125-I	50	#4	STR.	11'-2"	373
✳A144-I	6	#5	STR.	13'-3"	83	A447-I	1	#5	STR.	18'-0"	19						
✳A145-I	1	#5	STR.	19'-11"	21	A448-I	1	#5	STR.	16'-9"	17	✳S1-I	100	#5	3	6'-0"	626
✳A146-I	1	#5	STR.	18'-8"	19	A449-I	1	#5	STR.	15'-6"	16	✳S2-I	76	#4	4	4'-0"	203
✳A147-I	1	#5	STR.	17'-5"	18	A450-I	1	#5	STR.	14'-3"	15	✳S3-I	45	#4	4	3'-4"	100
✳A148-I	1	#5	STR.	16'-2"	17	A451-I	1	#5	STR.	13'-0"	14	S4-I	840	#4	5	3'-5"	1,917
✳A149-I	1	#5	STR.	14'-11"	16	A452-I	1	#5	STR.	11'-9"	12	✳S10-I	912	#5	11	5'-5"	5,152
✳A150-I	1	#5	STR.	13'-8"	14	A453-I	1	#5	STR.	10'-6"	11						
✳A151-I	1	#5	STR.	12'-5"	13	A454-I	1	#5	STR.	9'-3"	10	U1-I	120	#4	9	17'-4"	1,389
✳A152-I	1	#5	STR.	11'-2"	12	A455-I	1	#5	STR.	8'-0"	8	U2-I	30	#4	4	11'-2"	224
✳A153-I	1	#5	STR.	9'-11"	10	A456-I	1	#5	STR.	6'-9"	7						
✳A154-I	1	#5	STR.	8'-8"	9	A457-I	1	#5	STR.	5'-6"	6						
✳A155-I	1	#5	STR.	7'-5"	8	A458-I	4	#5	STR.	4'-0"	17						
✳A156-I	1	#5	STR.	6'-2"	6												
✳A157-I	1	#5	STR.	4'-11"	5												
✳A158-I	4	#5	STR.	3'-6"	15												
												✳EPOXY COATED REINF. STEEL (LBS.)					107,010
												REINF. STEEL (LBS.)					98,706

PROJECT NO. U-2524C
GUILFORD COUNTY
STATION: POT 407+73.35 -L-
= POT 29+32.06 -Y4-
SHEET 6 OF 8

STATE OF NORTH CAROLINA
DEPARTMENT OF TRANSPORTATION
RALEIGH

SUPERSTRUCTURE
BILL OF MATERIALS

-LEFT LANE-

NORTH CAROLINA PROFESSIONAL SEAL 28479 ENGINEER KEVIN G. BAILEY
5-30-13

STV / Ralph Whitehead Associates, Inc.
1000 West Morehead St., Ste. 200
Charlotte, NC 28208
NC License No. F-0991

REVISIONS								SHEET NO.
NO.	BY:	DATE:	NO.	BY:	DATE:			S-169
1			3					TOTAL SHEETS
2			4					836

DRAWN BY : ACA DATE : 1-13
CHECKED BY : AJP DATE : 2-13
DESIGN ENGINEER OF RECORD: A. PETER DATE : 5-13

5/30/2013 4:59:58 PM R:\ustation\Finals\Super Bill of Mats Sheet 6 of 8.dgn

BAR BENDING DIMENSIONS

MARK	TYPE	A	B	C	D	E
K1-A	1	8′-4″	4′-3″	8′-4″		
K1-B	1	6′-6″	4′-1″	6′-6″		
K2-B	1	12′-8″	5′-3″	13′-6″		
K1-6	1	8′-0″	4′-9″	8′-0″		
K1-C	1	13′-10″	5′-9″	13′-2″		
K2-C	1	8′-6″	4′-2″	8′-6″		
K1-D	1	7′-0″	4′-3″	7′-0″		
K2-D	1	7′-7″	1′-4″	7′-7″		
K1-E	1	7′-0″	4′-3″	7′-0″		
K2-E	1	7′-7″	1′-4″	7′-7″		
K1-15	1	6′-11″	4′-3″	6′-11″		
K2-15	1	8′-2″	4′-3″	8′-2″		
K1-16	1	8′-2″	4′-3″	8′-2″		
K2-16	1	8′-2″	4′-3″	4′-7″		
K3-16	1	4′-7″	4′-3″	4′-7″		
K4-16	1	8′-2″	4′-3″	7′-5″		
K5-16	1	7′-5″	4′-3″	7′-5″		
K1-F	1	8′-2″	4′-2″	8′-2″		
K2-F	1	9′-5″	1′-8″	9′-5″		
K1-G	1	6′-0″	2′-0″	6′-0″		
K1-24	1	6′-0″	2′-0″	6′-0″		
K2-24	1	7′-11″	2′-4″	7′-11″		
K1-H	1	7′-5″	2′-7″	7′-5″		
K2-H	1	6′-10″	2′-7″	6′-10″		
K1-I	1	10′-1″	3′-3″	11′-7″		
K2-I	1	9′-0″	4′-6″	9′-0″		
K3-A	2				8′-4″	5′-9″
K3-B	2				6′-6″	5′-9″
K4-B	2				13′-0″	8′-0″
K3-6	2				8′-0″	7′-0″
K3-C	2				13′-10″	9′-9″
K4-C	2				8′-6″	5′-11″
K5-C	2				13′-2″	9′-3″
K3-D	2				7′-0″	5′-11″
K4-D	2				7′-7″	4′-6″
K3-E	2				7′-0″	5′-11″
K4-E	2				7′-7″	4′-6″
K3-15	2				6′-11″	5′-11″
K4-15	2				8′-2″	6′-5″
K6-16	2				7′-5″	3′-10″
K71-16	2				8′-6″	3′-10″
K72-16	2				8′-10″	3′-10″
K8-16	2				8′-2″	6′-8″
K9-16	2				6′-5″	4′-7″
K10-16	2				7′-5″	6′-2″
K3-F	2				8′-2″	6′-8″
K4-F	2				9′-5″	5′-3″
K3-G	2				6′-0″	4′-3″
K3-24	2				6′-0″	4′-3″
K4-24	2				7′-11″	3′-2″
K3-H	2				7′-5″	5′-6″
K4-H	2				6′-10″	5′-4″
K3-I	2				10′-1″	6′-0″
K4-I	2				9′-0″	6′-0″
K5-I	2				11′-7″	6′-0″

BAR BENDING DIMENSIONS

MARK	TYPE	F	G	H	I	J	K	L	M	N	O	P
S2-A	4	10″	11″									
U2-A	4	4′-6″	2′-0″									
S2-B	4	10″	10″									
S3-B	4	1′-10″	10″									
U3-B	4	4′-6″	2′-0″									
U4-B	4	4′-6″	2′-8″									
S2-C	4	1′-9″	10″									
S3-C	4	10″	10″									
U2-C	4	4′-6″	3′-0″									
S2-D	4	11″	11″									
S3-D	4	1′-9″	11″									
U2-D	4	4′-6″	2′-0″									
S2-E	4	11″	11″									
S3-E	4	1′-9″	11″									
U2-E	4	4′-6″	2′-0″									
S2-15	4	10″	10″									
S2-16	4	10″	10″									
S3-16	4	1′-0″	10″									
S2-F	4	10″	10″									
S3-F	4	1′-6″	10″									
U2-F	4	4′-2″	2′-0″									
S2-I	4	1′-7″	10″									
S3-I	4	1′-3″	10″									
U2-I	4	4′-3″	2′-8″									
K101-B	8			5′-8″	4′-2″	5′-8″	2′-10¾″					
K100-C	8			6′-5″	4′-6″	6′-5″	3′-5″					
K100-I	8			6′-0″	3′-9″	6′-0″	2′-6″					
K101-I	8			5′-9″	3′-9″	5′-9″	2′-4″					
K102-I	8			5′-9″	3′-9″	5′-9″	2′-2″					
U1-A	9							6′-9″	2′-0″			
U1-B	9							6′-8″	2′-0″			
U2-B	9							6′-8″	2′-8″			
U1-C	9							6′-8″	3′-0″			
U1-D	9							7′-0″	2′-0″			
U1-E	9							6′-10″	2′-0″			
U1-F	9							6′-6″	2′-0″			
U1-I	9							6′-8″	2′-8″			
K102-B	10									5′-8″	2′-1″	1′-5⅜″
K101-C	10									2′-3″	6′-5″	1′-8½″
G4-16	10									6′-0″	6′-0″	1′-1″
K103-I	10									6′-0″	1′-10″	1′-3″
K104-I	10									5′-9″	1′-10″	1′-2″
K105-I	10									5′-9″	1′-10″	1′-1″

SUPERSTRUCTURE REINFORCING STEEL LENGTHS ARE BASED ON THE FOLLOWING MINIMUM SPLICE LENGTHS

BAR SIZE	SUPERSTRUCTURE EXCEPT APPROACH SLABS, PARAPET, AND BARRIER RAIL		APPROACH SLABS		PARAPET AND BARRIER RAIL
	EPOXY COATED	UNCOATED	EPOXY COATED	UNCOATED	
#4	2′-0″	1′-9″	2′-0″	1′-9″	2′-9″
#5	2′-6″	2′-2″	2′-6″	2′-2″	3′-5″
#6	3′-0″	2′-7″	3′-10″	2′-7″	4′-4″
#7	5′-3″	3′-6″			
#8	6′-10″	4′-7″			

BAR TYPES

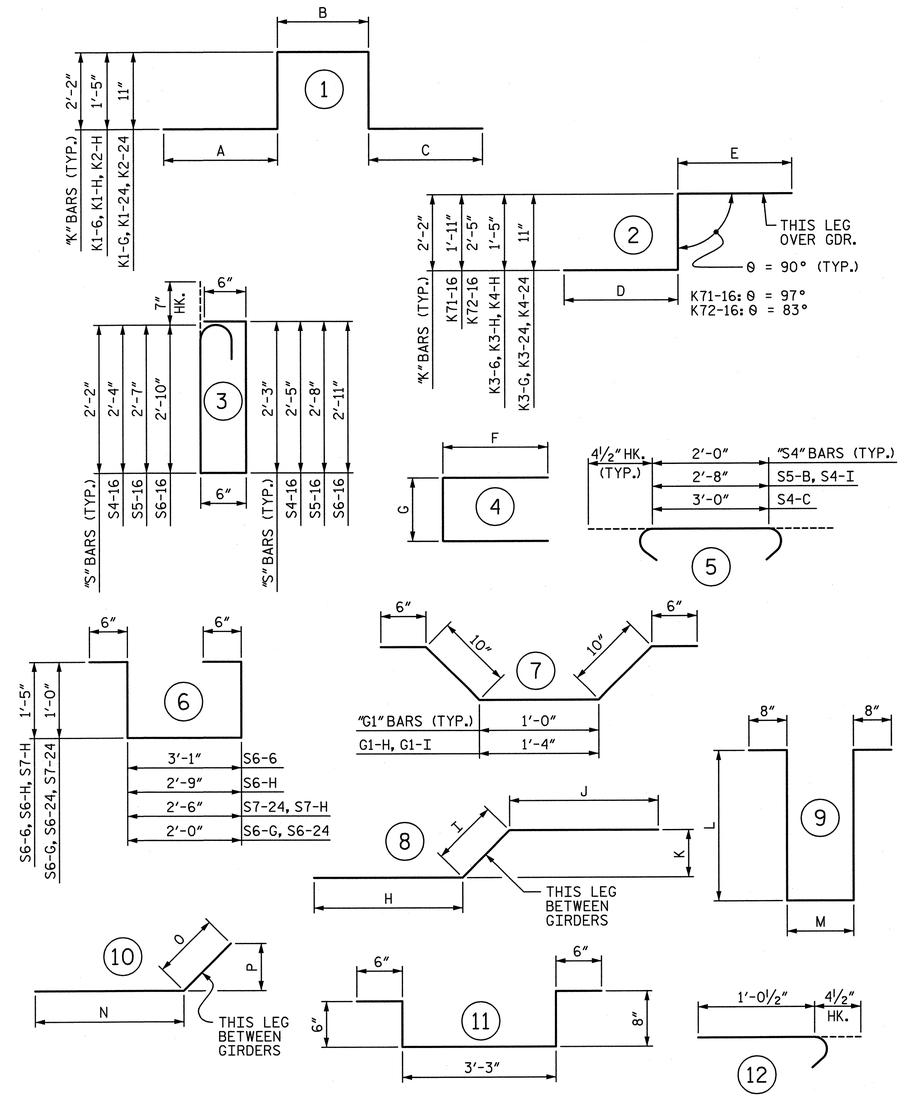

ALL BAR DIMENSIONS ARE OUT TO OUT

PROJECT NO. U-2524C

GUILFORD COUNTY

STATION: POT 407+73.35 -L-
= POT 29+32.06 -Y4-

SHEET 7 OF 8

STATE OF NORTH CAROLINA
DEPARTMENT OF TRANSPORTATION
RALEIGH

SUPERSTRUCTURE BILL OF MATERIALS

-LEFT LANE-

NORTH CAROLINA PROFESSIONAL SEAL 28479 ENGINEER KEVIN G. BAILEY
5-30-13

STV/Ralph Whitehead Associates, Inc.
1000 West Morehead St., Ste. 200
Charlotte, NC 28208
NC License No. F-0991

REVISIONS						SHEET NO.
NO.	BY:	DATE:	NO.	BY:	DATE:	S-170
1			3			TOTAL SHEETS
2			4			83

DRAWN BY : ACA DATE : 1-13
CHECKED BY : AJP DATE : 3-13
DESIGN ENGINEER OF RECORD: A. PETER DATE : 5-13

5/30/2013 5:00:03 PM R:\ustation\Finals\Super Bill of Mats Sheet 7 of 8.dgn

SUPERSTRUCTURE BILL OF MATERIAL

UNIT/ SPAN	CLASS AA CONCRETE	EPOXY COATED STEEL REINFORCING	STEEL REINFORCING	REINF. CONCRETE DECK SLAB	GROOVING BRIDGE FLOORS
	(CU. YDS.)	(LBS.)	(LBS.)	(SQ. FT.)	(SQ. FT.)
A	503.3	50,534	45,066	13,111.1	11,758.5
B	858.8	87,699	83,664	22,178.2	20,127.6
6	699.8	63,966	73,226	19,560.2	17,829.2
C	515.2	52,372	45,116	12,885.0	11,727.8
D	1,119.7	107,528	94,722	28,693.5	26,264.3
E	1,088.9	99,378	97,365	29,058.3	26,598.9
15	351.1	30,156	29,102	9,466.5	8,651.0
16	402.7	36,630	34,795	10,968.1	10,001.8
F	1,097.7	112,595	118,100	30,344.2	27,307.8
G	1,602.5	189,342	167,906	45,197.4	40,712.3
24	366.1	33,492	38,631	10,208.2	9,153.3
H	1,036.0	115,492	107,677	28,620.4	25,744.3
I	1,099.9	107,010	98,706	27,459.2	24,703.4
TOTAL*	10,741.7	1,086,194	1,034,076	287,750.3	260,580.2

* QUANTITIES FOR CONCRETE BARRIER RAIL ARE NOT INCLUDED

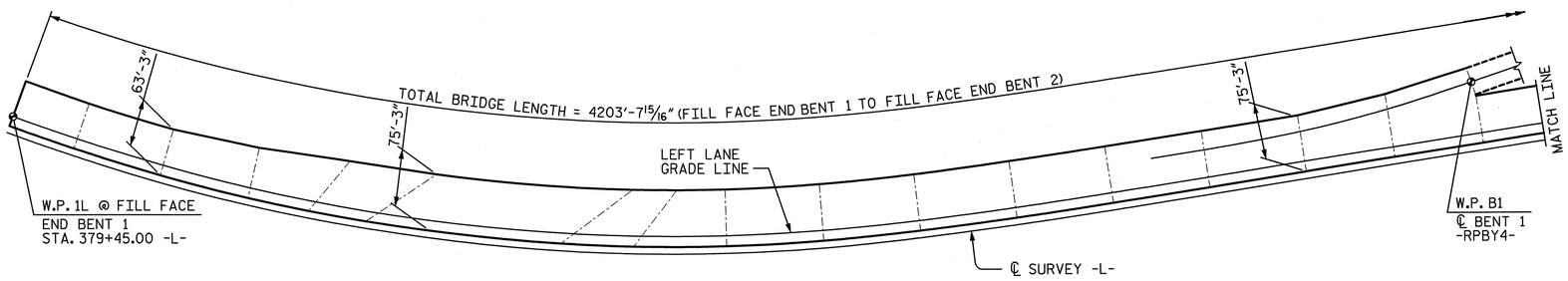

GROOVING BRIDGE FLOORS

APPROACH SLABS	3,512.6 SQ.FT.
BRIDGE DECK	260,580.2 SQ.FT.
TOTAL	264,092.8 SQ.FT.

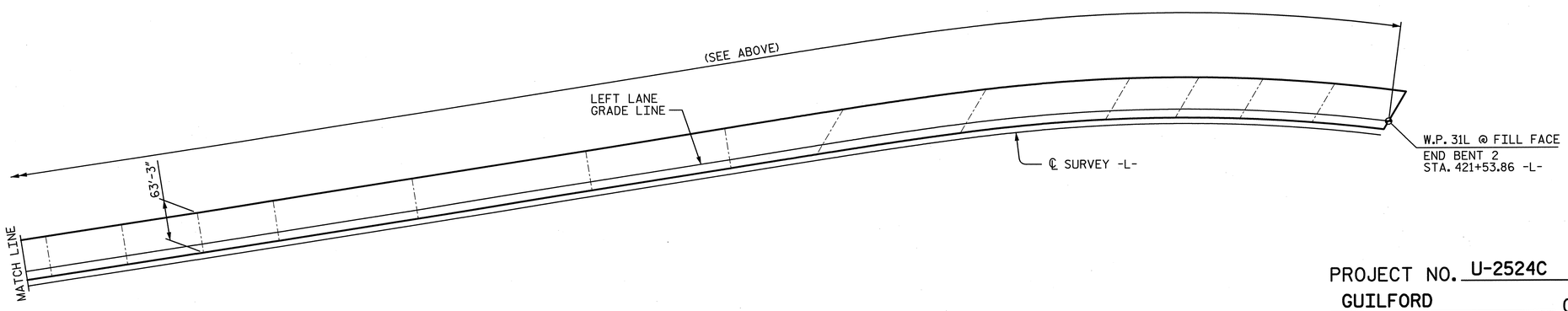

LAYOUT FOR COMPUTING AREA OF REINFORCED CONCRETE DECK SLAB

(SQ. FT. = 287,750.3)

PROJECT NO. U-2524C

GUILFORD COUNTY

STATION: POT 407+73.35 -L-
= POT 29+32.06 -Y4-

SHEET 8 OF 8

NORTH CAROLINA PROFESSIONAL SEAL 28479 ENGINEER KEVIN G. BAILEY 6-7-13

STATE OF NORTH CAROLINA
DEPARTMENT OF TRANSPORTATION
RALEIGH

SUPERSTRUCTURE BILL OF MATERIALS

-LEFT LANE-

REVISIONS							SHEET NO.
NO.	BY:	DATE:	NO.	BY:	DATE:		S-171
1			3				TOTAL SHEETS
2			4				836

STV / Ralph Whitehead Associates, Inc.
1000 West Morehead St., Ste. 200
Charlotte, NC 28208
NC License No. F-0991

DRAWN BY : ACA	DATE : 01-13	DESIGN ENGINEER OF RECORD: A. PETER	DATE : 5-13
CHECKED BY : AJP	DATE : 3-13		

6/7/2013 12:49:09 PM R:\ustation\Finals\Super Bill of Mats Sheet 8 of 8.dgn

NOTES:

1. SEE SHEET 3 OF 3 FOR NOTES.
2. SEE SHEET 3 OF 3 FOR SECTIONS A-A AND B-B.

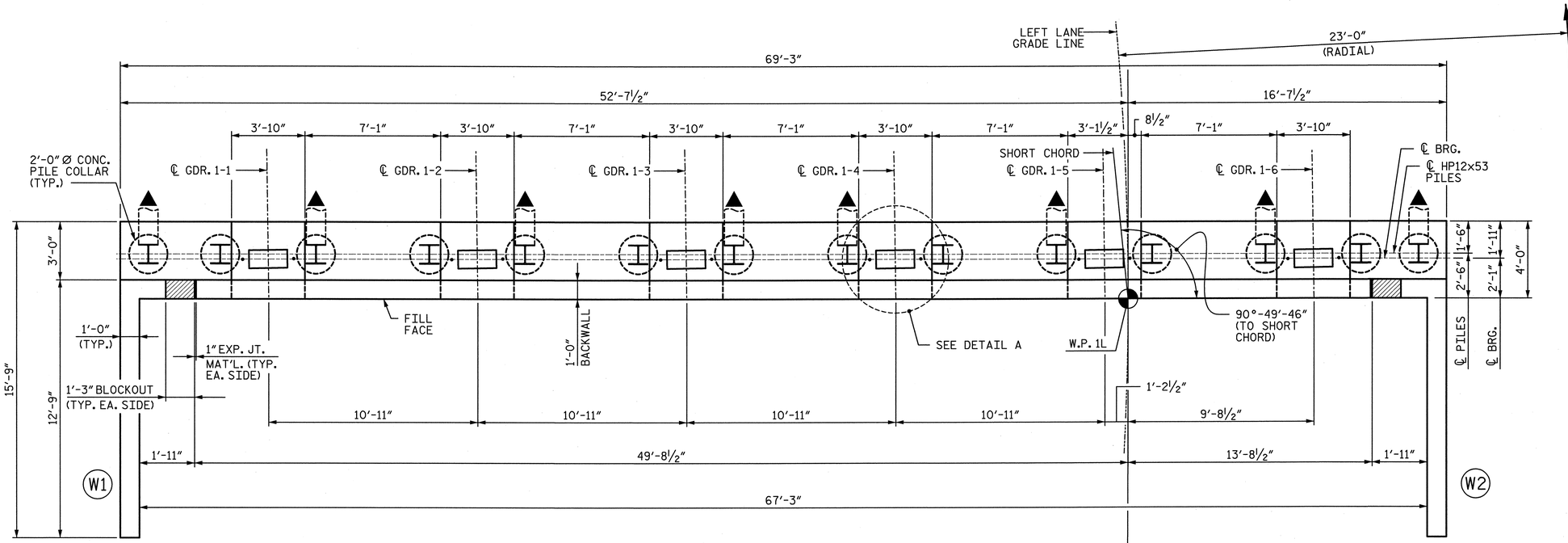

PLAN

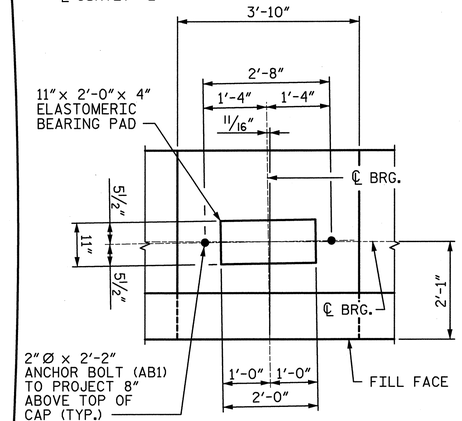

DETAIL A

(TYP. EA. GIRDER)

TOP OF PILE ELEVATIONS (BASED ON 2'-0" EMBEDMENT)	
PILE	ELEVATION
P1	790.76
P2	790.93
P3	791.15
P4	791.41
P5	791.63
P6	791.89
P7	792.11
P8	792.37
P9	792.59
P10	792.85
P11	793.07
P12	793.33
P13	793.55
P14	793.69

▲ REINFORCING IN WING NOT SHOWN FOR CLARITY. FOR DETAILS, SEE SHEET 2 OF 3.

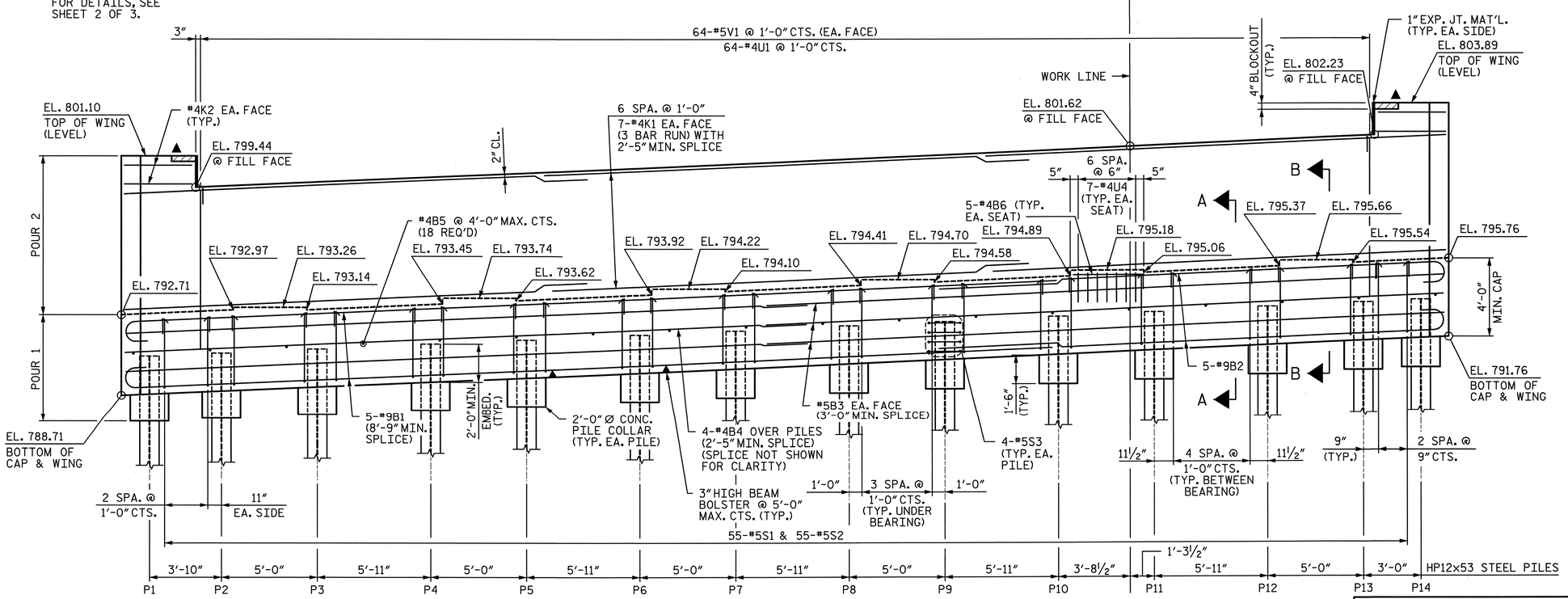

ELEVATION

(LOOKING IN THE DIRECTION OF STATIONING)

NORTH CAROLINA PROFESSIONAL SEAL 28479 ENGINEER KEVIN G. BAILEY 5-30-13

PROJECT NO. U-2524C

GUILFORD COUNTY

STATION: POT 407+73.35 -L-
= POT 29+32.06 -Y4-

SHEET 1 OF 3

STATE OF NORTH CAROLINA
DEPARTMENT OF TRANSPORTATION
RALEIGH

SUBSTRUCTURE
END BENT 1

-LEFT LANE-

DRAWN BY: CLG	DATE: 12-12	DESIGN ENGINEER OF RECORD: P. KELLY	DATE: 5-13
CHECKED BY: PEK	DATE: 01-13		

STV / Ralph Whitehead Associates, Inc.
1000 West Morehead St. Ste. 200
Charlotte, NC 28208
NC License No. F-0991

REVISIONS								SHEET NO.
NO.	BY:	DATE:	NO.	BY:	DATE:			S-172
1			3					TOTAL SHEETS
2			4					836

R:\ustation\Finals\End Bent 1- Sheet 1of 3.dgn 5:00:11 PM 5/30/2013

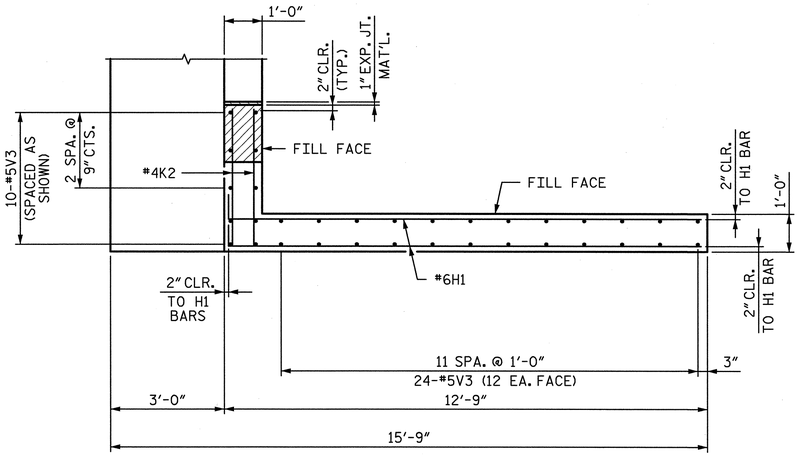

PLAN (W1)

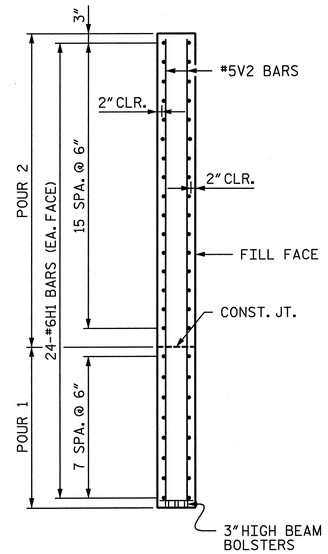

SECTION D-D

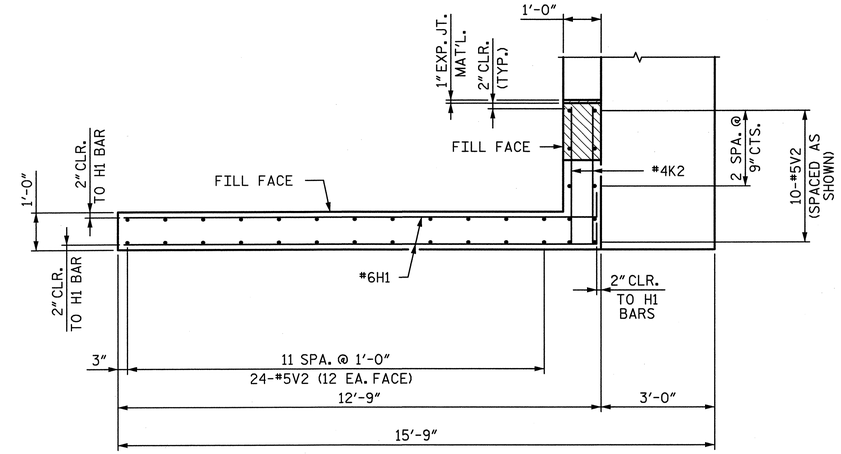

PLAN (W2)

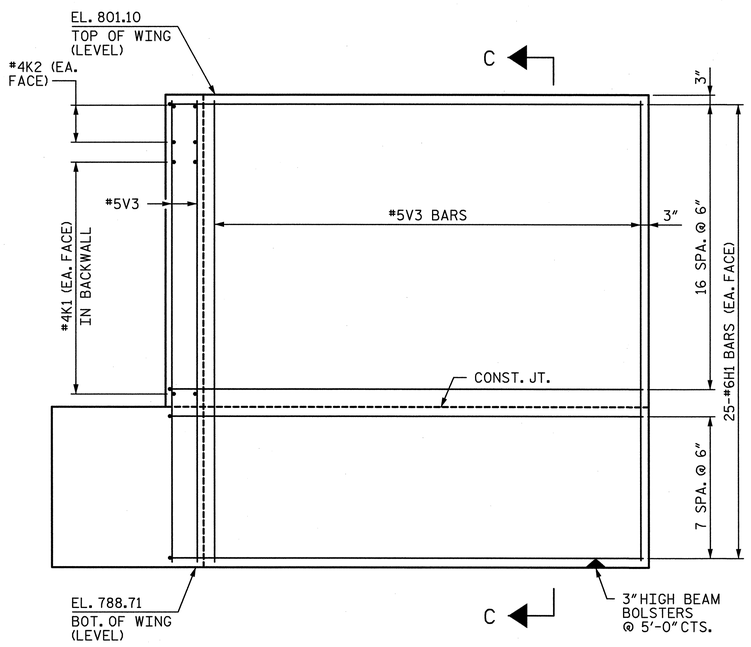

ELEVATION (W1)

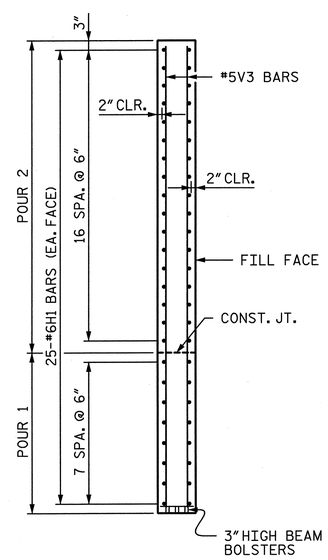

SECTION C-C

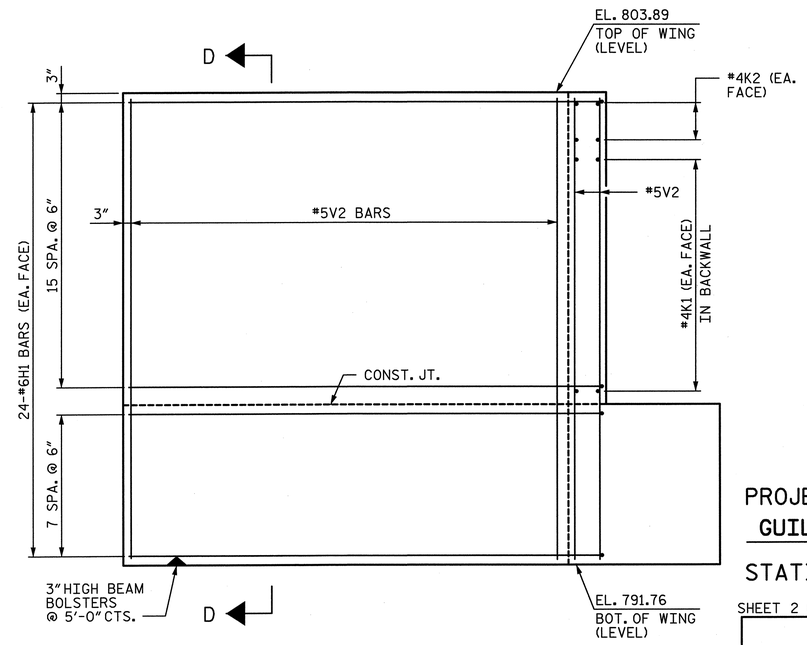

ELEVATION (W2)

NORTH CAROLINA PROFESSIONAL SEAL 28479 ENGINEER KEVIN G. BAILEY 5-30-13

PROJECT NO. U-2524C

GUILFORD COUNTY

STATION: POT 407+73.35 -L-
= POT 29+32.06 -Y4-

SHEET 2 OF 3

STATE OF NORTH CAROLINA
DEPARTMENT OF TRANSPORTATION
RALEIGH

SUBSTRUCTURE
END BENT 1

-LEFT LANE-

REVISIONS						SHEET NO.
NO.	BY:	DATE:	NO.	BY:	DATE:	S-173
1			3			TOTAL SHEETS
2			4			836

STV / Ralph Whitehead Associates, Inc.
1000 West Morehead St., Ste. 200
Charlotte, NC 28208
NC License No. F-0991

DRAWN BY : CLG	DATE : 12-12	DESIGN ENGINEER OF RECORD: P. KELLY	DATE : 5-13
CHECKED BY : PEK	DATE : 01-13		

5/30/2013 5:00:15 PM R:\ustation\Finals\End Bent 1- Sheet 2 of 3.dgn

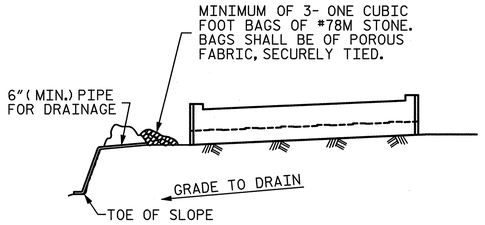

BAGGED STONE AND PIPE SHALL BE PLACED IMMEDIATELY AFTER COMPLETION OF END BENT EXCAVATION. PIPE MAY BE EITHER CONCRETE, CORRUGATED STEEL, CORRUGATED ALUMINUM ALLOY, OR CORRUGATED PLASTIC. PERFORATED PIPE WILL NOT BE ALLOWED.

BAGGED STONE SHALL REMAIN IN PLACE UNTIL THE ENGINEER DIRECTS THAT IT BE REMOVED. THE CONTRACTOR SHALL REMOVE AND DISPOSE OF SILT ACCUMULATIONS AT BAGGED STONE WHEN SO DIRECTED BY THE ENGINEER. BAGS SHALL BE REMOVED AND REPLACED WHENEVER THE ENGINEER DETERMINES THAT THEY HAVE DETERIORATED AND LOST THEIR EFFECTIVENESS.

NO SEPARATE PAYMENT WILL BE MADE FOR THIS WORK AND THE ENTIRE COST OF THIS WORK SHALL BE INCLUDED IN THE UNIT CONTRACT PRICE BID FOR THE SEVERAL PAY ITEMS.

TEMPORARY DRAINAGE AT END BENT

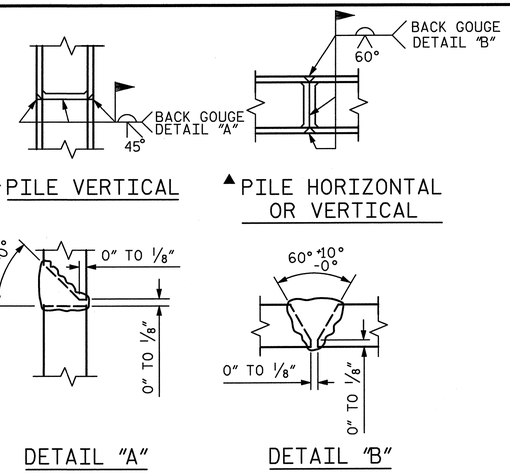

▲ POSITION OF PILE DURING WELDING.

PILE SPLICE DETAILS

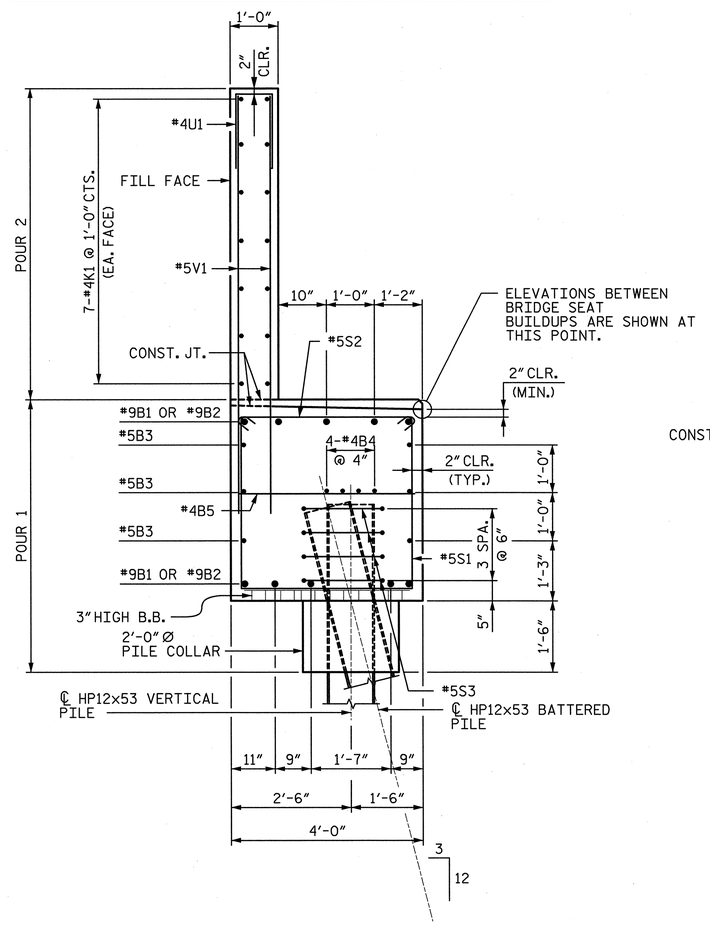

SECTION A-A

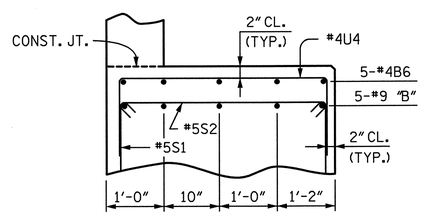

PARTIAL SECTION B

(TYP. AT EACH BRIDGE SEAT)
(ANCHOR BOLTS NOT SHOWN FOR CLARITY)

BAR TYPES

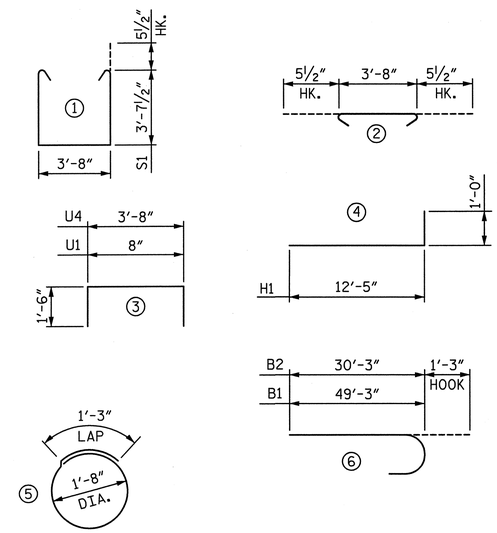

ALL BAR DIMENSIONS ARE OUT TO OUT.

REINFORCING BAR SCHEDULE

BAR	NO.	SIZE	TYPE	LENGTH	WEIGHT
B1	10	#9	6	50'-6"	1,717
B2	10	#9	6	31'-6"	1,071
B3	12	#5	STR	36'-0"	451
B4	12	#4	STR	24'-8"	198
B5	18	#4	STR	3'-8"	44
B6	30	#4	STR	3'-6"	70
H1	98	#6	4	13'-5"	1,975
K1	42	#4	STR	24'-9"	694
K2	8	#4	STR	3'-6"	19
V1	128	#5	STR	8'-9"	1,168
V2	34	#5	STR	11'-9"	417
V3	34	#5	STR	12'-1"	428
S1	55	#5	1	11'-10"	679
S2	55	#5	2	4'-7"	263
S3	56	#5	5	6'-6"	380
U1	64	#4	3	3'-8"	157
U4	42	#4	3	6'-8"	187

QUANTITIES

		END BENT 1
REINFORCING STEEL	LBS.	9,918
CLASS A CONCRETE		
POUR 1 (CAP, PILE COLLAR & LOWER WING)	: CU. YARDS	47.9
POUR 2 (BACKWALL & UPPER WING)	: CU. YARDS	24.5
TOTAL	: CU. YARDS	72.4
HP12x53 STEEL PILES	NO.	14
	LIN. FEET	945

NOTES:

STIRRUPS IN CAP MAY BE SHIFTED AS NECESSARY TO CLEAR ANCHOR BOLTS.

BACKWALL SHALL BE PLACED BEFORE APPLYING THE EPOXY PROTECTIVE COATING.

THE TOP SURFACE AREAS OF THE END BENT CAP SHALL BE CURED IN ACCORDANCE WITH THE STANDARD SPECIFICATIONS EXCEPT THAT THE MEMBRANE CURING COMPOUND METHOD SHALL NOT BE USED.

THE TOP SURFACE OF THE CAP EXCEPT THE BRIDGE SEAT BUILDUPS SHALL BE SLOPED TRANSVERSELY FROM THE FILL FACE TO THE OUTSIDE FACE AT THE RATE OF 2%.

"U" BARS IN BRIDGE SEATS MAY BE SHIFTED TO CLEAR OTHER REINFORCING.

DIMENSIONS LOCATING PILES ARE SHOWN TO THE CENTERLINE OF THE PILE AT THE BOTTOM OF THE END BENT CAP.

THE CONCRETE IN THE SHADED AREA OF THE WING SHALL BE POURED AFTER THE BARRIER RAIL ARE CAST IF SLIP FORMING IS USED.

SEE "ELASTOMERIC BEARING DETAILS" SHEET FOR 2" Ø ANCHOR BOLT DETAILS.

INSTALL THE 4" Ø DRAIN PIPE THROUGH THE WING WALL AS REQUIRED FOR THE REINFORCED BRIDGE APPROACH FILL, SEE ROADWAY PLANS. REINFORCING STEEL IN THE WING WALL MAY BE SHIFTED AS NECESSARY TO CLEAR THE DRAIN PIPE.

NORTH CAROLINA PROFESSIONAL SEAL 28479 ENGINEER KEVIN G. BAILEY
5-30-13

PROJECT NO. U-2524C
GUILFORD COUNTY
STATION: POT 407+73.35 -L-
= POT 29+32.06 -Y4-

SHEET 3 OF 3

STATE OF NORTH CAROLINA
DEPARTMENT OF TRANSPORTATION
RALEIGH

SUBSTRUCTURE
END BENT 1

-LEFT LANE-

STV / Ralph Whitehead Associates, Inc.
1000 West Morehead St., Ste. 200
Charlotte, NC 28208
NC License No. F-0991

REVISIONS						SHEET NO.
NO.	BY:	DATE:	NO.	BY:	DATE:	S-174
1			3			TOTAL SHEETS
2			4			836

DRAWN BY : CLG	DATE : 12-12	DESIGN ENGINEER OF RECORD: P. KELLY	DATE : 5-13
CHECKED BY : PEK	DATE : 01-13		

5/30/2013 5:00:19 PM R:\station\Finals\End Bent 1- Sheet 3 of 3.dgn

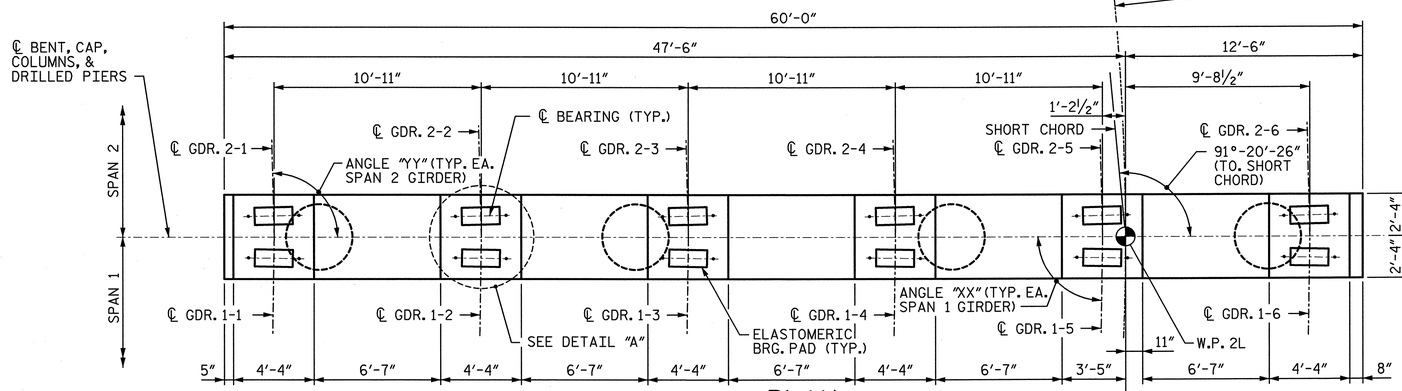

PLAN

NOTE:
INVERT ALTERNATE PAIRS OF STIRRUPS.

NOTE:
SEE TABLE A THIS SHEET FOR "XX" AND "YY" ANGLES.

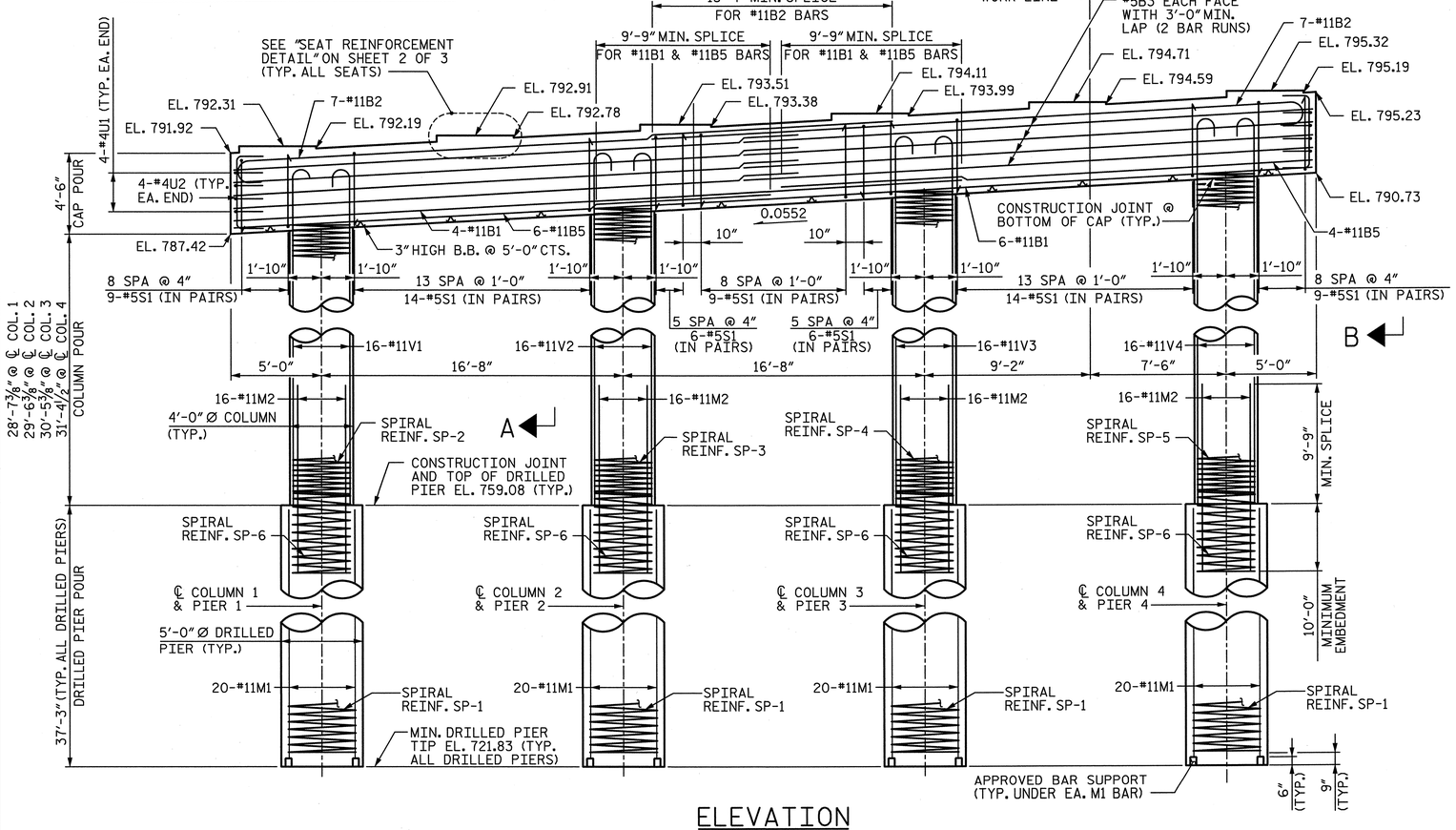

ELEVATION

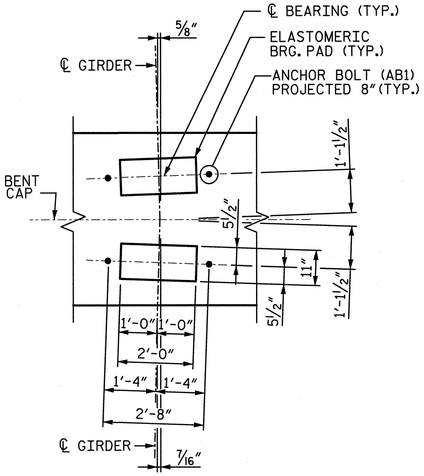

DETAIL "A"

(TYP. AT EACH BRIDGE SEAT)

NOTE:
℄ SURVEY -L-, SHORT CHORD AND LEFT LANE GRADE LINE EXAGGERATED FOR CLARITY.

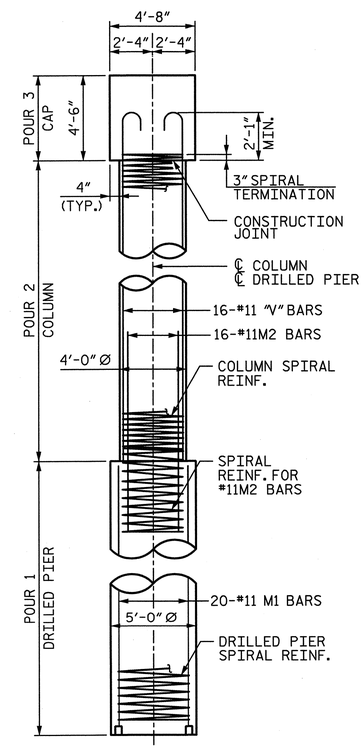

SIDE VIEW

NOTES:

1. ALL REINFORCING STEEL IN THE DRILLED PIERS IS INCLUDED IN THE PAY ITEMS FOR "REINFORCING STEEL" AND "SPIRAL COLUMN REINFORCING STEEL".
2. THE LOCATION OF THE CONSTRUCTION JOINT IN THE DRILLED PIERS IS BASED ON AN APPROXIMATE GROUND LINE ELEVATION. IF THE CONSTRUCTION JOINT IS ABOVE THE ACTUAL GROUND ELEVATION, THE CONTRACTOR SHALL PLACE THE CONSTRUCTION JOINT 1 FOOT BELOW THE GROUND LINE.
3. STIRRUPS AND "U BARS" IN CAP MAY BE SHIFTED SLIGHTLY AS NECESSARY TO CLEAR ANCHOR BOLTS.
4. HOOKS ON BARS MAY BE TURNED AS NECESSARY FOR PLACING REINFORCING STEEL.
5. A CONSTRUCTION JOINT AT MID-HEIGHT OF COLUMN IS PERMITTED.
6. FOR "AB1" ANCHOR BOLTS, SEE "ELASTOMERIC BEARING DETAILS" SHEET.
7. SEE "GENERAL DRAWING GENERAL NOTES" SHEET FOR ADDITIONAL NOTES.
8. SEE SHEET 2 OF 3 FOR SECTIONS CALLED OUT ON ELEVATION VIEW.

TABLE A

PLAN VIEW ANGLES

GDR.	ANGLE "XX"
1-1	89°-06'-10"
1-2	89°-06'-10"
1-3	89°-06'-11"
1-4	89°-06'-12"
1-5	89°-06'-12"
1-6	89°-06'-12"
	ANGLE "YY"
2-1	91°-20'-26"
2-2	91°-20'-26"
2-3	91°-20'-26"
2-4	91°-20'-27"
2-5	91°-20'-27"
2-6	91°-20'-27"

NORTH CAROLINA PROFESSIONAL SEAL 28479 ENGINEER KEVIN G. BAILEY 5-30-13

PROJECT NO. U-2524C
GUILFORD COUNTY
STATION: POT 407+73.35 -L-
= POT 29+32.06 -Y4-

SHEET 1 OF 3

STATE OF NORTH CAROLINA
DEPARTMENT OF TRANSPORTATION
RALEIGH

SUBSTRUCTURE
BENT 1
PLAN & ELEVATION

-LEFT LANE-

REVISIONS						SHEET NO.
NO.	BY:	DATE:	NO.	BY:	DATE:	S-175
1			3			TOTAL SHEETS
2			4			836

STV / Ralph Whitehead Associates, Inc.
1000 West Morehead St., Ste. 200
Charlotte, NC 28208
NC License No. F-0991

DRAWN BY : KDH DATE : 9-12
CHECKED BY : JAN DATE : 12-12
DESIGN ENGINEER OF RECORD: K. BAILEY DATE : 5-13

5/30/2013 5:00:23 PM R:\ustation\Finals\Bent 01- 1of 3.dgn

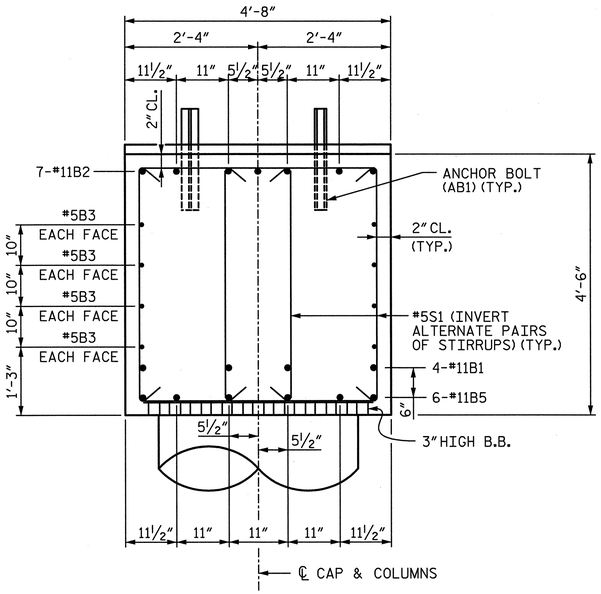

SECTION A-A

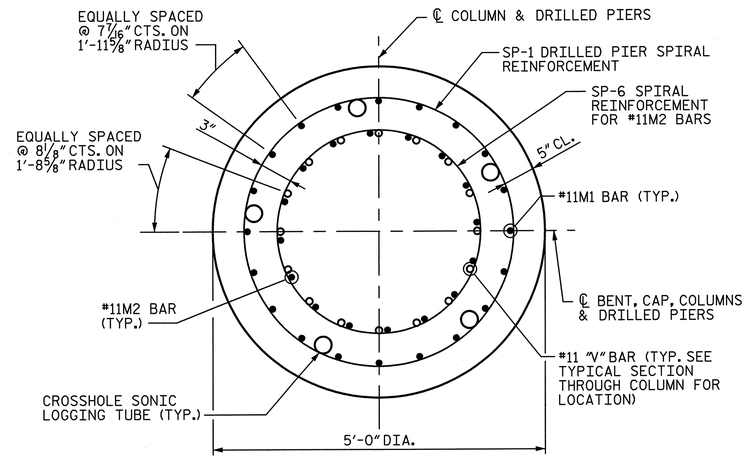

TYPICAL SECTION THROUGH DRILLED PIER

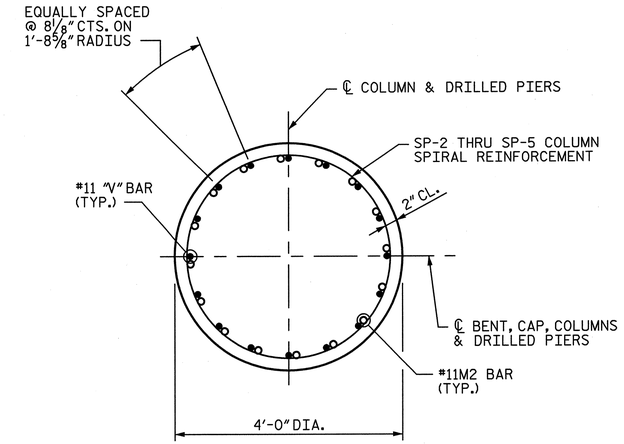

TYPICAL SECTION THROUGH COLUMN

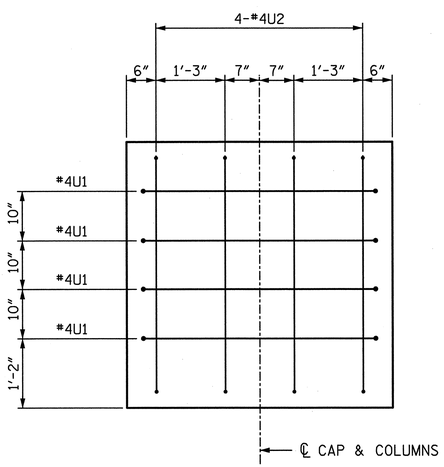

END VIEW B-B

(RIGHT END SHOWN, LEFT END SIMILAR)

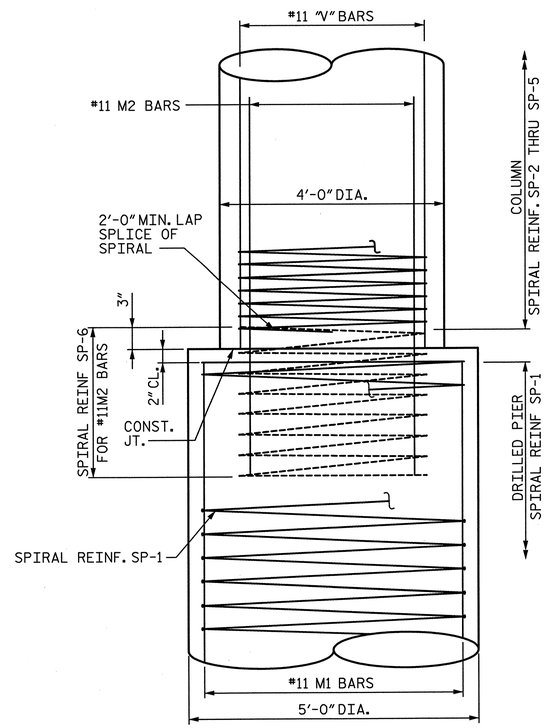

CONSTRUCTION JOINT DETAIL

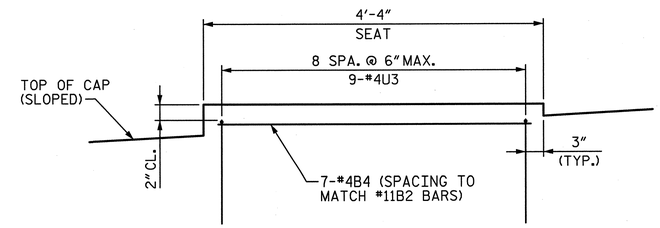

SEAT REINFORCEMENT DETAIL

(TYPICAL AT EACH BEARING SEAT)

PROJECT NO. U-2524C

GUILFORD COUNTY

STATION: POT 407+73.35 -L-
= POT 29+32.06 -Y4-

SHEET 2 OF 3

STATE OF NORTH CAROLINA
DEPARTMENT OF TRANSPORTATION
RALEIGH

SUBSTRUCTURE
BENT 1
DETAILS

-LEFT LANE-

NORTH CAROLINA PROFESSIONAL SEAL 28479 ENGINEER KEVIN G. BAILEY
5-30-13

DRAWN BY : KDH	DATE : 9-12	DESIGN ENGINEER OF RECORD: K. BAILEY	DATE : 5-13
CHECKED BY : JAN	DATE : 12-12		

STV / Ralph Whitehead Associates, Inc.
1000 West Morehead St. Ste. 200
Charlotte, NC 28208
NC License No. F-0991

REVISIONS						
NO.	BY:	DATE:	NO.	BY:	DATE:	
1			3			
2			4			

SHEET NO. S-176

TOTAL SHEETS 836

5/30/2013 5:00:28 PM R:\ustation\Finals\Bent 01- 2 of 3.dgn

QUANTITIES

REINFORCING STEEL		LBS.	43,457
SPIRAL REINFORCING STEEL		LBS.	9,853
CLASS A CONCRETE :	POUR 2 - COLUMNS	CU. YDS.	55.9
	POUR 3 - CAP	CU. YDS.	47.8
	TOTAL	CU. YDS.	103.7
5'-0"Ø DRILLED PIERS IN SOIL		L.F.	100
5'-0"Ø DRILLED PIERS NOT IN SOIL		L.F.	49
TOTAL 5'-0"Ø DRILLED PIERS		L.F.	149
DRILLED PIER CONCRETE :	POUR 1	CU. YDS.	108.4
CSL TUBES		L.F.	775

BAR TYPES

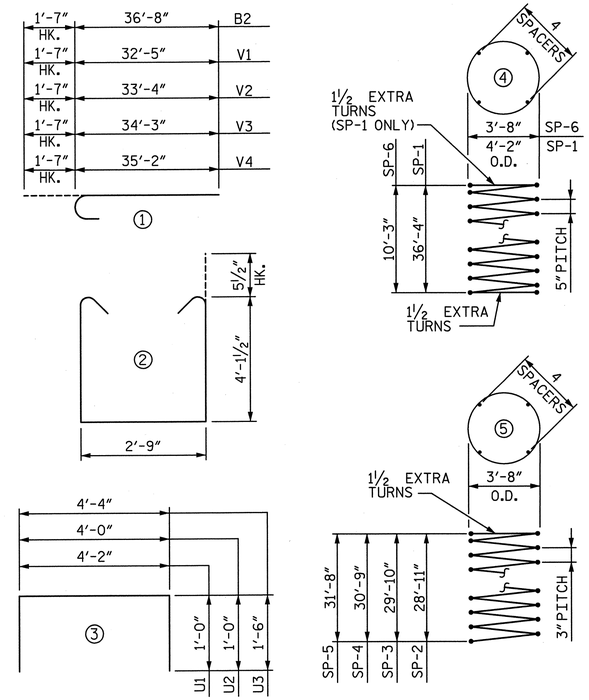

ALL BAR DIMENSIONS ARE OUT TO OUT

BILL OF MATERIAL

BAR	NO.	SIZE	TYPE	LENGTH	WEIGHT
B1	10	#11	STR.	40'-2"	2,134
B2	14	#11	①	38'-3"	2,845
B3	16	#5	STR.	31'-4"	523
B4	42	#4	STR.	4'-0"	112
B5	10	#11	STR.	29'-3"	1,554
M1	80	#11	STR.	36'-7"	15,549
M2	64	#11	STR.	19'-9"	6,716
S1	134	#5	②	11'-11"	1,666
U1	8	#4	③	6'-2"	33
U2	8	#4	③	6'-0"	32
U3	54	#4	③	7'-4"	265
V1	16	#11	①	34'-0"	2,890
V2	16	#11	①	34'-11"	2,968
V3	16	#11	①	35'-10"	3,046
V4	16	#11	①	36'-9"	3,124
SP-1	4	✳✳	④	1,166'-7"	4,867
SP-2	1	✳	⑤	1,336'-8"	893
SP-3	1	✳	⑤	1,378'-5"	921
SP-4	1	✳	⑤	1,420'-2"	949
SP-5	1	✳	⑤	1,462'-0"	977
SP-6	4	✳✳	④	298'-7"	1,246

✳✳ THE SP-1 AND SP-6 SPIRAL REINFORCING STEEL SHALL BE W31 OR D-31 COLD DRAWN WIRE OR #5 PLAIN OR DEFORMED BAR WITH A 5"PITCH.

✳ THE SP-2 THROUGH SP-5 SPIRAL REINFORCING SHALL BE W20 OR D-20 COLD DRAWN WIRE OR #4 PLAIN OR DEFORMED BAR WITH A 3"PITCH.

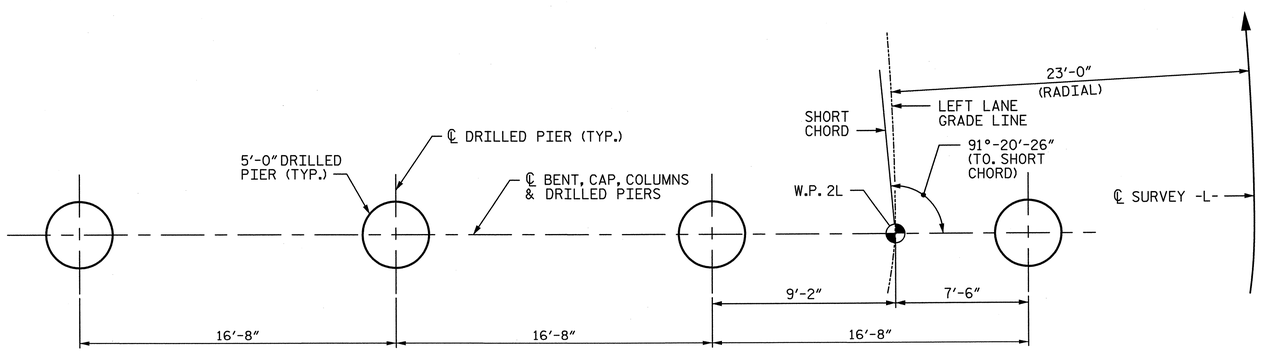

PLAN OF DRILLED PIERS

PROJECT NO. U-2524C

GUILFORD COUNTY

STATION: POT 407+73.35 -L-
= POT 29+32.06 -Y4-

SHEET 3 OF 3

STATE OF NORTH CAROLINA
DEPARTMENT OF TRANSPORTATION
RALEIGH

SUBSTRUCTURE BENT 1 DETAILS & BILL OF MATERIAL

-LEFT LANE-

NORTH CAROLINA PROFESSIONAL SEAL 28479 ENGINEER KEVIN G. BAILEY 5-30-13

STV/ Ralph Whitehead Associates, Inc.
1000 West Morehead St., Ste. 200
Charlotte, NC 28208
NC License No. F-0991

REVISIONS						SHEET NO.
NO.	BY:	DATE:	NO.	BY:	DATE:	S-177
1			3			TOTAL SHEETS
2			4			83

DRAWN BY : KDH DATE : 9-12
CHECKED BY : JAN DATE : 12-12

DESIGN ENGINEER OF RECORD: K. BAILEY DATE : 5-13

5/30/2013 5:00:32 PM R:\ustation\Finals\Bent 01- 3 of 3.dgn

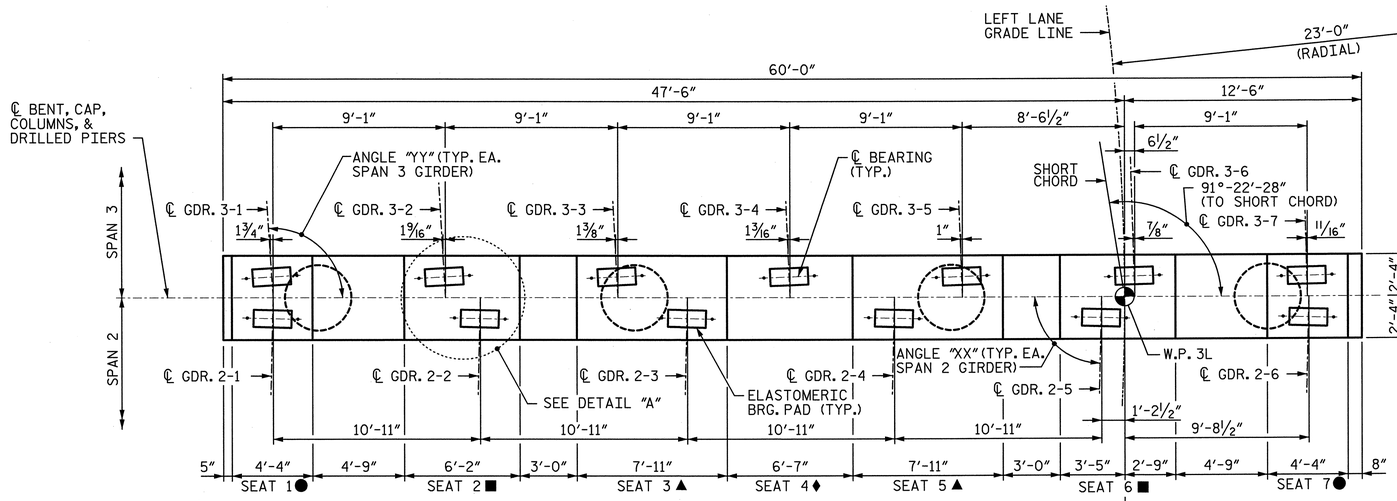

● SEE "SEAT REINFORCEMENT DETAIL A" ON SHEET 2 OF 3 FOR SEAT REINFORCEMENT DETAILS.

■ SEE "SEAT REINFORCEMENT DETAIL B" ON SHEET 2 OF 3 FOR SEAT REINFORCEMENT DETAILS.

▲ SEE "SEAT REINFORCEMENT DETAIL C" ON SHEET 2 OF 3 FOR SEAT REINFORCEMENT DETAILS.

♦ SEE "SEAT REINFORCEMENT DETAIL C" ON SHEET 2 OF 3 FOR SEAT REINFORCEMENT DETAILS.

PLAN

NOTE: SEE TABLE A THIS SHEET FOR "XX" AND "YY" ANGLES.

NOTE: ℄ SURVEY -L-, SHORT CHORD AND LEFT LANE GRADE LINE EXAGGERATED FOR CLARITY.

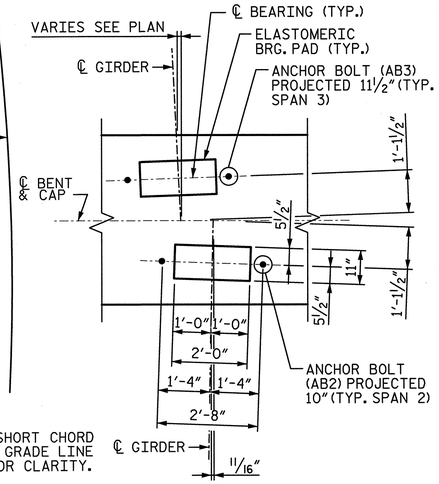

DETAIL "A"

(TYP. AT EACH BRIDGE SEAT)

NOTES:

1. ALL REINFORCING STEEL IN THE DRILLED PIERS IS INCLUDED IN THE PAY ITEMS FOR "REINFORCING STEEL" AND "SPIRAL COLUMN REINFORCING STEEL".
2. THE LOCATION OF THE CONSTRUCTION JOINT IN THE DRILLED PIERS IS BASED ON AN APPROXIMATE GROUND LINE ELEVATION. IF THE CONSTRUCTION JOINT IS ABOVE THE ACTUAL GROUND ELEVATION, THE CONTRACTOR SHALL PLACE THE CONSTRUCTION JOINT 1 FOOT BELOW THE GROUND LINE.
3. STIRRUPS AND "U BARS" IN CAP MAY BE SHIFTED SLIGHTLY AS NECESSARY TO CLEAR ANCHOR BOLTS.
4. HOOKS ON BARS MAY BE TURNED AS NECESSARY FOR PLACING REINFORCING STEEL.
5. A CONSTRUCTION JOINT AT MID-HEIGHT OF COLUMN IS PERMITTED.
6. FOR "AB2" AND "AB3" ANCHOR BOLTS, SEE "ELASTOMERIC BEARING DETAILS" SHEET.
7. SEE "GENERAL DRAWING GENERAL NOTES" SHEET FOR ADDITIONAL NOTES.
8. SEE SHEET 2 OF 3 FOR SECTIONS CALLED OUT ON ELEVATION VIEW.
9. THE TOP SURFACE AREAS OF THE BENT CAPS SHALL BE CURED IN ACCORDANCE WITH THE STANDARD SPECIFICATIONS EXCEPT THE MEMBRANE CURING COMPOUND METHOD SHALL NOT BE USED.

NOTE: INVERT ALTERNATE #5S1, #5S2 & #5S3 BARS.

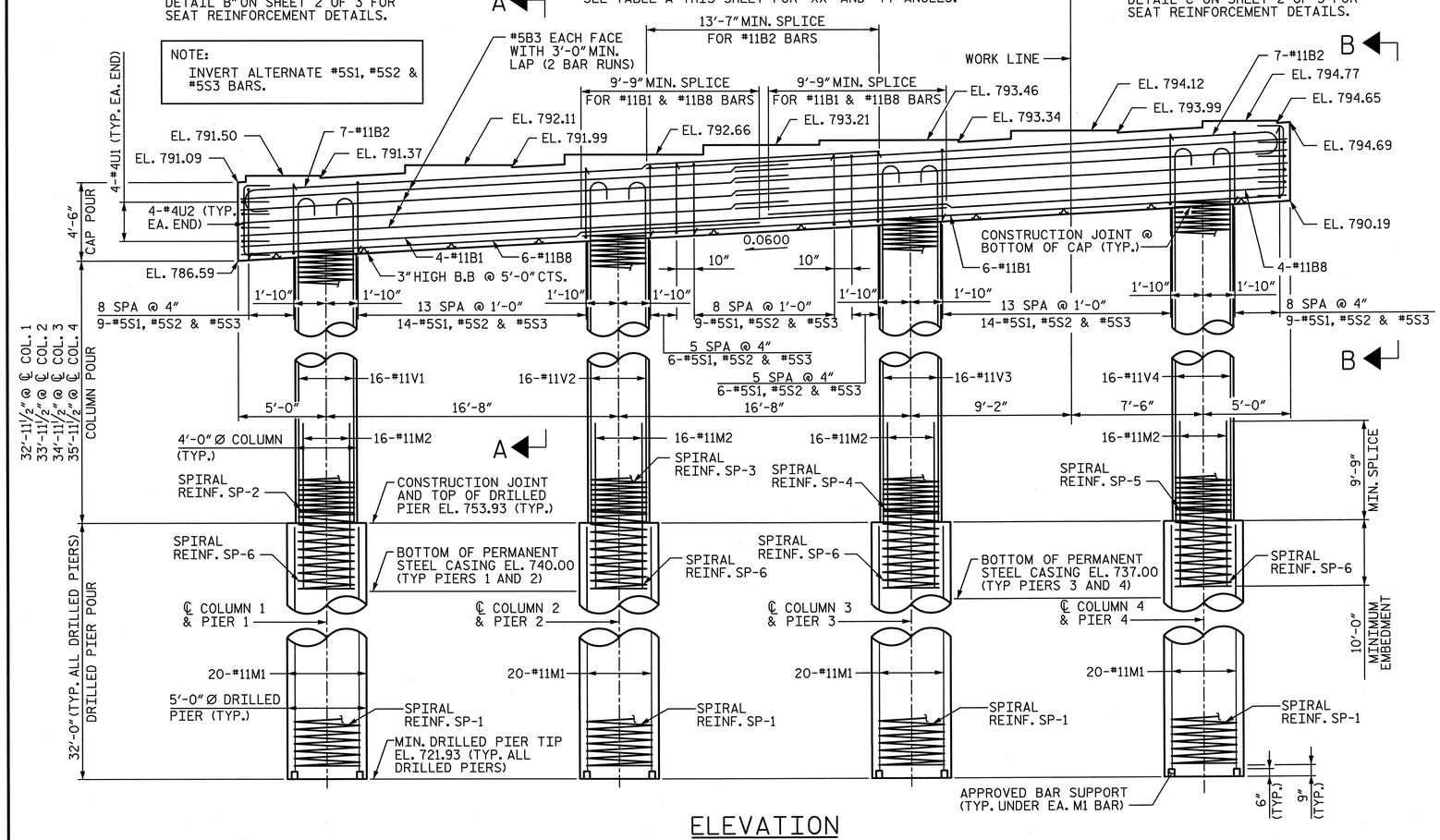

ELEVATION

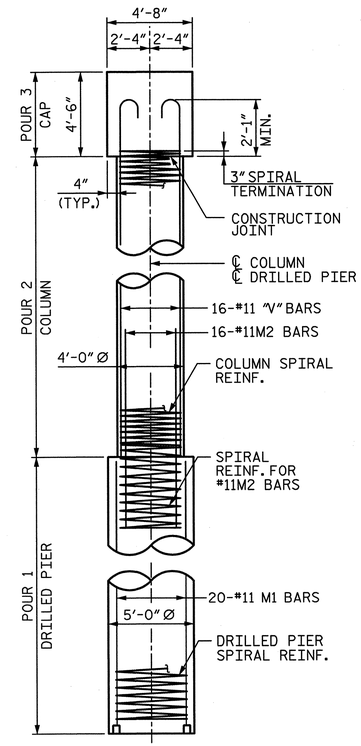

SIDE VIEW

TABLE A	
PLAN VIEW ANGLES	
GDR.	ANGLE "XX"
2-1	88°-37'-46"
2-2	88°-37'-46"
2-3	88°-37'-47"
2-4	88°-37'-47"
2-5	88°-37'-47"
2-6	88°-37'-47"
	ANGLE "YY"
3-1	93°-35'-04"
3-2	93°-12'-34"
3-3	92°-50'-13"
3-4	92°-28'-02"
3-5	92°-06'-01"
3-6	91°-44'-10"
3-7	91°-22'-28"

NORTH CAROLINA PROFESSIONAL SEAL 28479 ENGINEER KEVIN G. BAILEY 5-30-13

PROJECT NO. U-2524C

GUILFORD COUNTY

STATION: POT 407+73.35 -L-
= POT 29+32.06 -Y4-

SHEET 1 OF 3

STATE OF NORTH CAROLINA
DEPARTMENT OF TRANSPORTATION
RALEIGH

SUBSTRUCTURE
BENT 2
PLAN & ELEVATION

-LEFT LANE-

DRAWN BY : KDH DATE : 9-12
CHECKED BY : JAN DATE : 12-12

DESIGN ENGINEER OF RECORD: K. BAILEY DATE : 5-13

STV / Ralph Whitehead Associates, Inc.
1000 West Morehead St., Ste. 200
Charlotte, NC 28208
NC License No. F-0991

REVISIONS							SHEET NO.
NO.	BY:	DATE:	NO.	BY:	DATE:		S-178
1			3				TOTAL SHEETS
2			4				83

5/30/2013 5:00:37 PM R:\ustation\Finals\Bent 02 - 1of 3.dgn

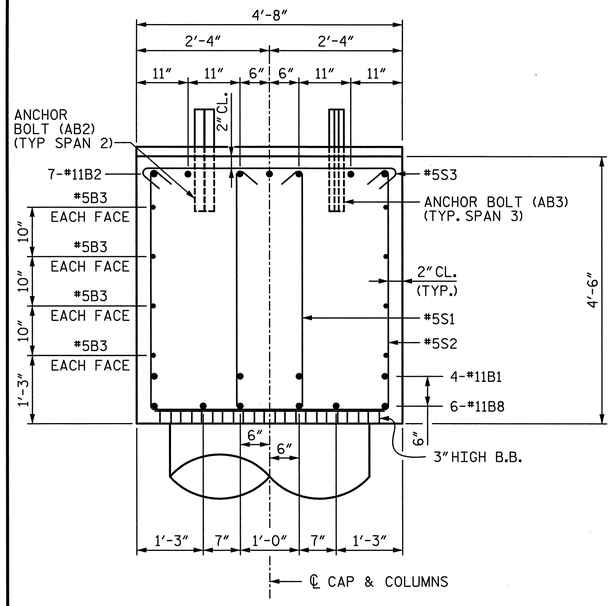

SECTION A-A

NOTE:
INVERT ALTERNATE #5S1, #5S2 & #5S3 BARS.

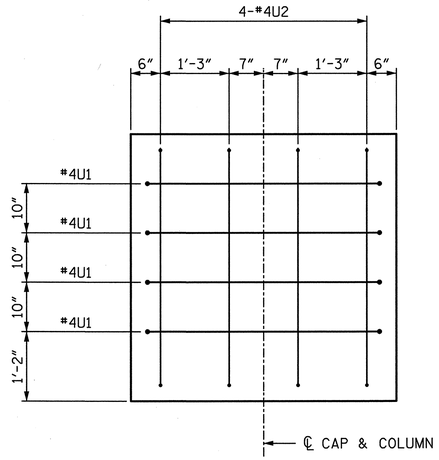

END VIEW B-B

(RIGHT END SHOWN, LEFT END SIMILAR)

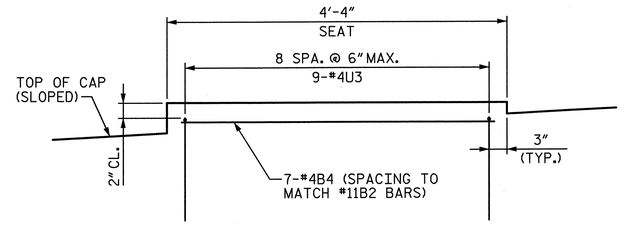

SEAT REINFORCEMENT DETAIL "A"

(FOR SEATS 1 AND 7)

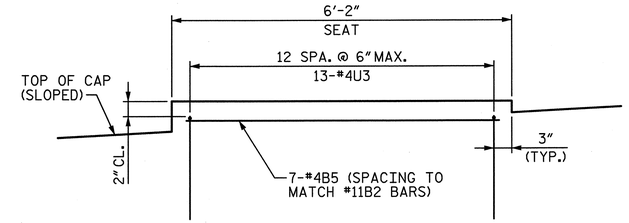

SEAT REINFORCEMENT DETAIL "B"

(FOR SEATS 2 AND 6)

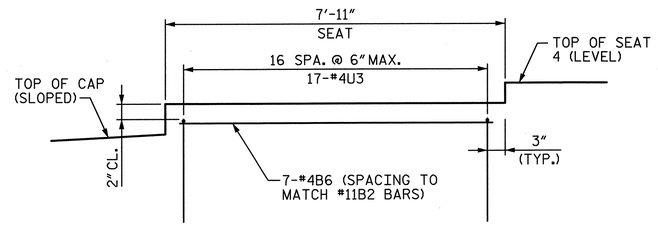

SEAT REINFORCEMENT DETAIL "C"

(FOR SEATS 3 AND 5)
(SEAT 3 SHOWN, SEAT 5 SIMILAR)

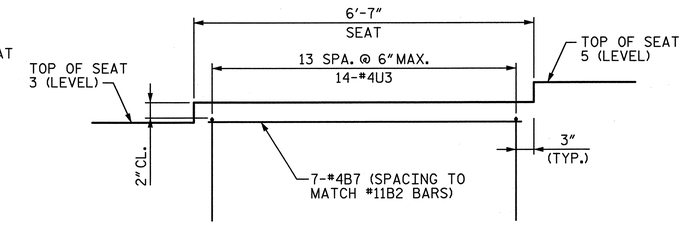

SEAT REINFORCEMENT DETAIL "D"

(FOR SEAT 4)

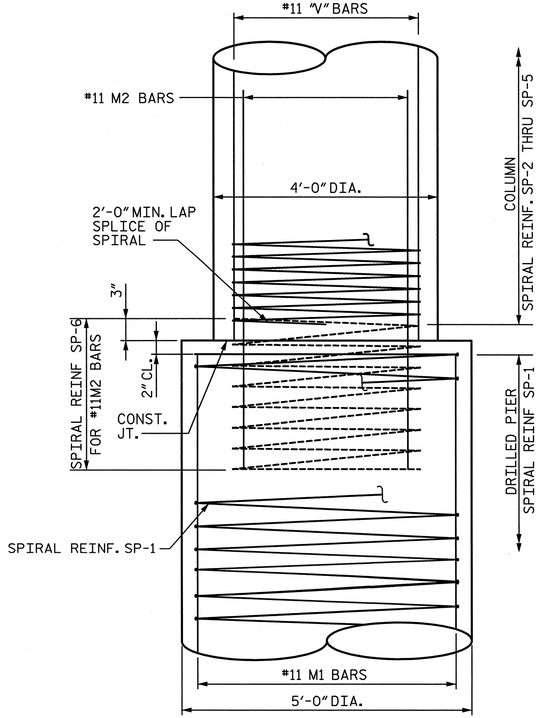

CONSTRUCTION JOINT DETAIL

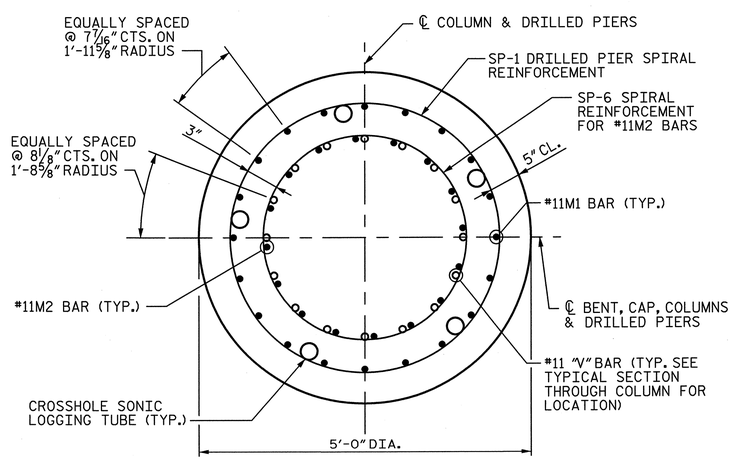

TYPICAL SECTION THROUGH DRILLED PIER

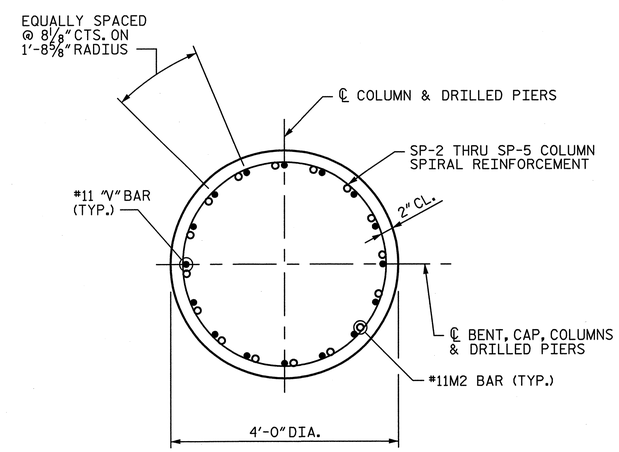

TYPICAL SECTION THROUGH COLUMN

NORTH CAROLINA PROFESSIONAL SEAL 28479 ENGINEER KEVIN G. BAILEY
5-30-13

PROJECT NO. U-2524C
GUILFORD COUNTY
STATION: POT 407+73.35 -L-
= POT 29+32.06 -Y4-

SHEET 2 OF 3

STATE OF NORTH CAROLINA
DEPARTMENT OF TRANSPORTATION
RALEIGH

SUBSTRUCTURE
BENT 2
DETAILS

-LEFT LANE-

REVISIONS							SHEET NO.
NO.	BY:	DATE:	NO.	BY:	DATE:		S-179
1			3				TOTAL SHEETS
2			4				336

STV / Ralph Whitehead Associates, Inc.
1000 West Morehead St., Ste. 200
Charlotte, NC 28208
NC License No. F-0991

DRAWN BY : KDH	DATE : 9-12	DESIGN ENGINEER OF RECORD: K. BAILEY	DATE : 5-13
CHECKED BY : JAN	DATE : 12-12		

5/30/2013 5:00:41 PM R:\ustation\Finals\Bent 02- 2 of 3.dgn

QUANTITIES

REINFORCING STEEL	LBS.	43,423
SPIRAL REINFORCING STEEL	LBS.	9,715
CLASS A CONCRETE : POUR 2 - COLUMNS	CU. YDS.	64.3
POUR 3 - CAP	CU. YDS.	49.2
TOTAL	CU. YDS.	113.5
5'-0" Ø DRILLED PIERS IN SOIL	L.F.	96
5'-0" Ø DRILLED PIERS NOT IN SOIL	L.F.	32
TOTAL 5'-0" Ø DRILLED PIERS	L.F.	128
PERMANENT STEEL CASING FOR 5'-0" Ø DRILLED PIERS	L.F.	66
DRILLED PIER CONCRETE : POUR 1	CU. YDS.	93.1
CSL TUBES	L.F.	670

BAR TYPES

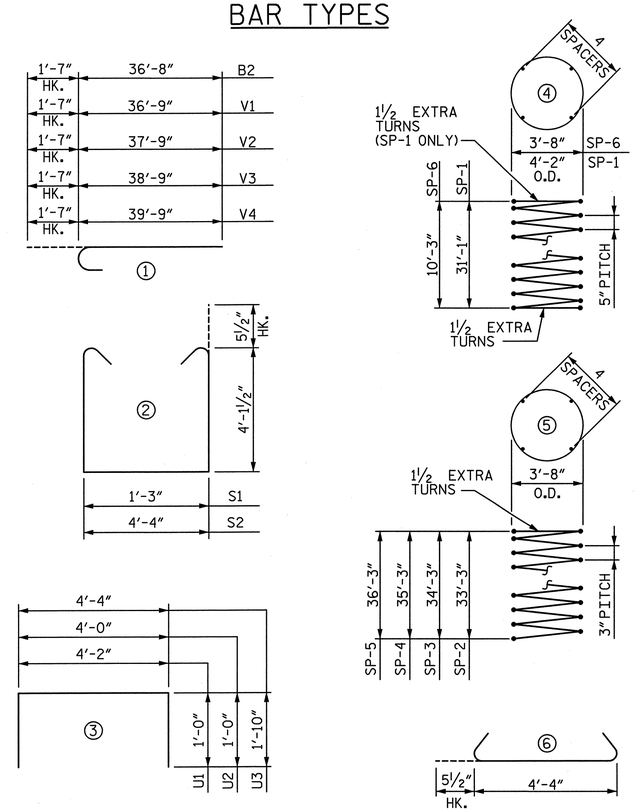

ALL BAR DIMENSIONS ARE OUT TO OUT

BILL OF MATERIAL

BAR	NO.	SIZE	TYPE	LENGTH	WEIGHT
B1	10	#11	STR.	40'-2"	2,134
B2	14	#11	①	38'-3"	2,845
B3	16	#5	STR.	31'-4"	523
B4	14	#4	STR.	4'-0"	37
B5	14	#4	STR.	5'-10"	55
B6	14	#4	STR.	7'-7"	71
B7	7	#4	STR.	6'-3"	29
B8	10	#11	STR.	29'-3"	1,554
M1	80	#11	STR.	31'-4"	13,318
M2	64	#11	STR.	19'-9"	6,716
S1	67	#5	②	10'-5"	728
S2	67	#5	②	13'-6"	943
S3	67	#5	⑥	5'-3"	367
U1	8	#4	③	6'-2"	33
U2	8	#4	③	6'-0"	32
U3	92	#4	③	8'-0"	492
V1	16	#11	①	38'-4"	3,259
V2	16	#11	①	39'-4"	3,344
V3	16	#11	①	40'-4"	3,429
V4	16	#11	①	41'-4"	3,514
SP-1	4	✱✱	④	1,003'-8"	4,187
SP-2	1	✱	⑤	1,534'-1"	1,025
SP-3	1	✱	⑤	1,579'-8"	1,055
SP-4	1	✱	⑤	1,625'-3"	1,086
SP-5	1	✱	⑤	1,670'-10"	1,116
SP-6	4	✱✱	④	298'-7"	1,246

✱✱ THE SP-1 AND SP-6 SPIRAL REINFORCING STEEL SHALL BE W31 OR D-31 COLD DRAWN WIRE OR #5 PLAIN OR DEFORMED BAR WITH A 5" PITCH.

✱ THE SP-2 THROUGH SP-5 SPIRAL REINFORCING SHALL BE W20 OR D-20 COLD DRAWN WIRE OR #4 PLAIN OR DEFORMED BAR WITH A 3" PITCH.

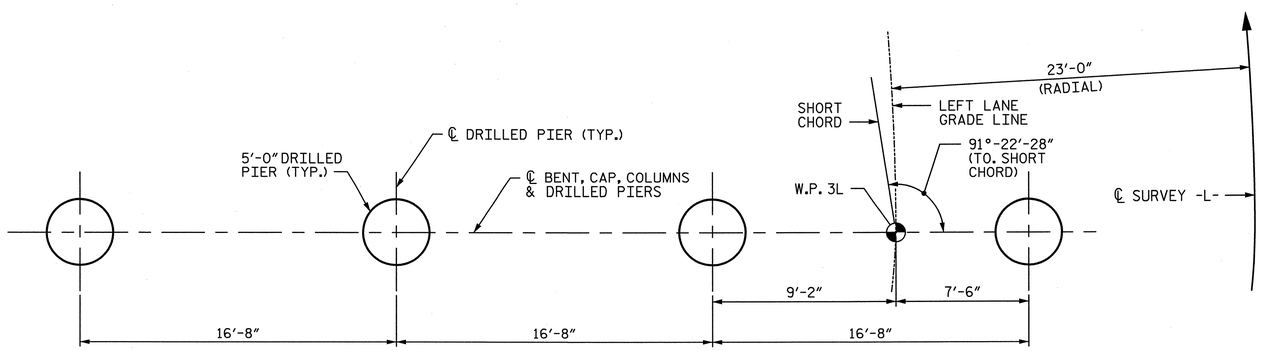

PLAN OF DRILLED PIERS

PROJECT NO. U-2524C

GUILFORD COUNTY

STATION: POT 407+73.35 -L-
= POT 29+32.06 -Y4-

SHEET 3 OF 3

STATE OF NORTH CAROLINA
DEPARTMENT OF TRANSPORTATION
RALEIGH

SUBSTRUCTURE BENT 2 DETAILS & BILL OF MATERIAL

-LEFT LANE-

NORTH CAROLINA PROFESSIONAL SEAL 28479 ENGINEER KEVIN G. BAILEY 5-30-13

REVISIONS						SHEET NO.
NO.	BY:	DATE:	NO.	BY:	DATE:	S-180
1			3			TOTAL SHEETS
2			4			83C

STV / Ralph Whitehead Associates, Inc.
1000 West Morehead St., Ste. 200
Charlotte, NC 28208
NC License No. F-0991

DRAWN BY : KDH DATE : 9-12
CHECKED BY : JAN DATE : 12-12
DESIGN ENGINEER OF RECORD: K. BAILEY DATE : 5-13

5/30/2013 5:00:46 PM R:\ustation\Finals\Bent 02- 3 of 3.dgn

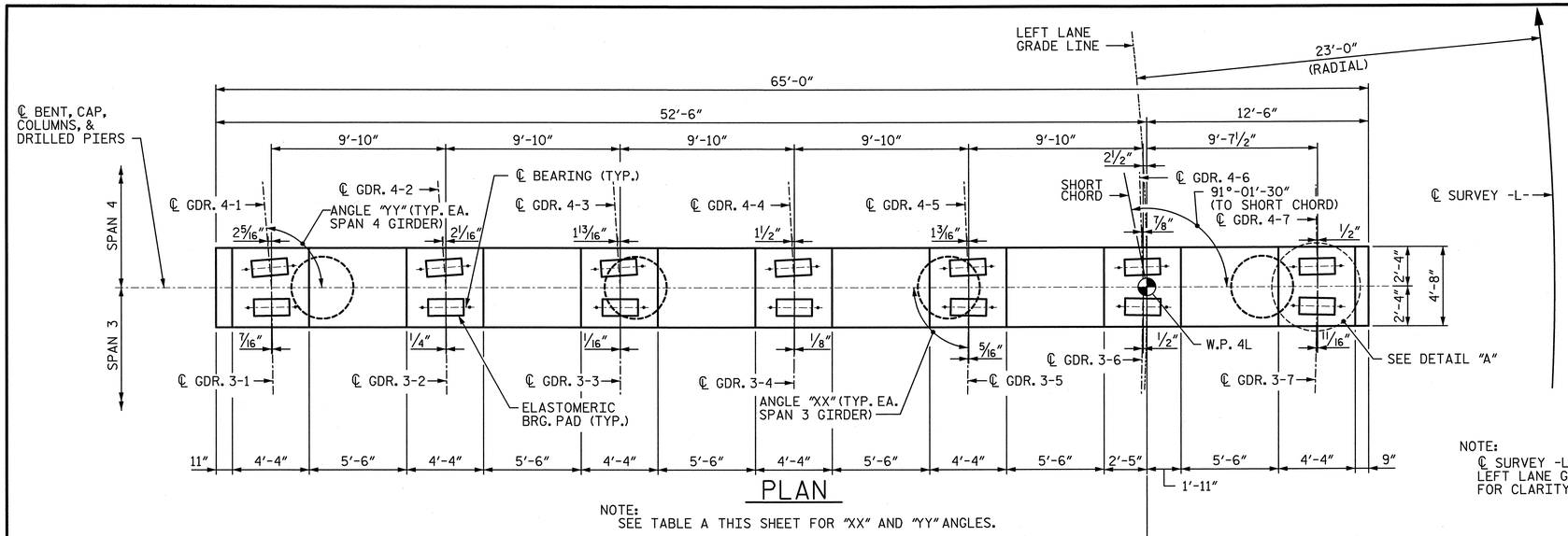

PLAN

NOTE:
SEE TABLE A THIS SHEET FOR "XX" AND "YY" ANGLES.

NOTE:
℄ SURVEY -L-, SHORT CHORD AND LEFT LANE GRADE LINE EXAGGERATED FOR CLARITY.

TABLE A	
PLAN VIEW ANGLES	
GDR.	ANGLE "XX"
3-1	90°-50'-08"
3-2	90°-27'-37"
3-3	90°-05'-16"
3-4	89°-43'-05"
3-5	89°-21'-04"
3-6	89°-59'-13"
3-7	88°-37'-32"
	ANGLE "YY"
4-1	94°-39'-57"
4-2	94°-11'-46"
4-3	93°-39'-58"
4-4	93°-05'-36"
4-5	92°-27'-36"
4-6	91°-45'-18"
4-7	90°-57'-48"

NOTE:
INVERT ALTERNATE PAIRS OF STIRRUPS.

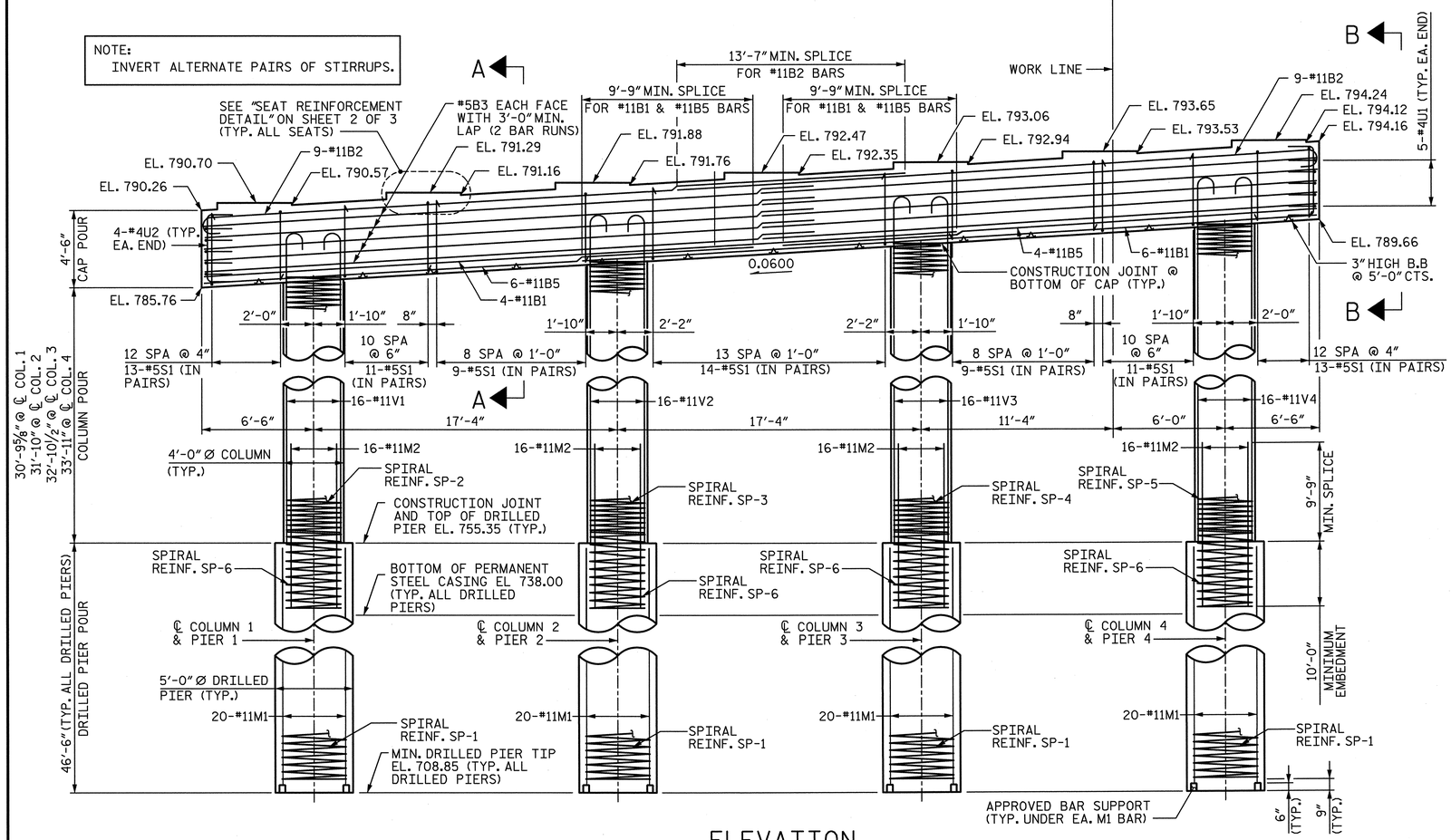

ELEVATION

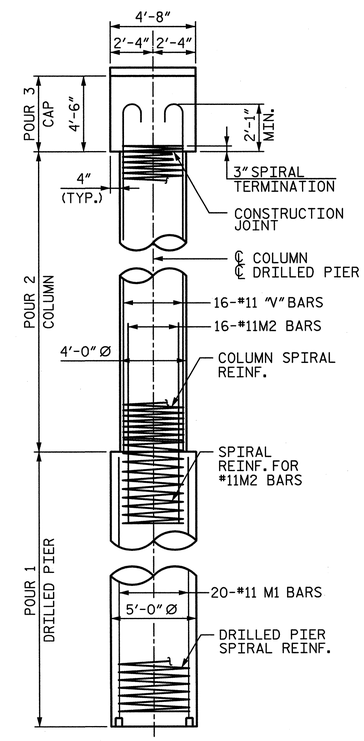

SIDE VIEW

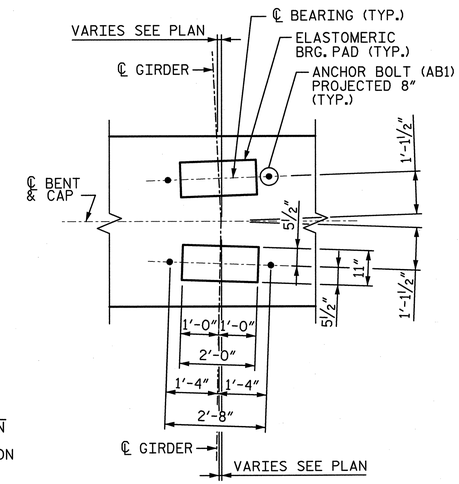

DETAIL "A"

(TYP. AT EACH BRIDGE SEAT)

NOTES:

1. ALL REINFORCING STEEL IN THE DRILLED PIERS IS INCLUDED IN THE PAY ITEMS FOR "REINFORCING STEEL" AND "SPIRAL COLUMN REINFORCING STEEL".
2. THE LOCATION OF THE CONSTRUCTION JOINT IN THE DRILLED PIERS IS BASED ON AN APPROXIMATE GROUND LINE ELEVATION. IF THE CONSTRUCTION JOINT IS ABOVE THE ACTUAL GROUND ELEVATION, THE CONTRACTOR SHALL PLACE THE CONSTRUCTION JOINT 1 FOOT BELOW THE GROUND LINE.
3. STIRRUPS AND "U BARS" IN CAP MAY BE SHIFTED SLIGHTLY AS NECESSARY TO CLEAR ANCHOR BOLTS.
4. HOOKS ON BARS MAY BE TURNED AS NECESSARY FOR PLACING REINFORCING STEEL.
5. A CONSTRUCTION JOINT AT MID-HEIGHT OF COLUMN IS PERMITTED.
6. FOR "AB1" ANCHOR BOLTS, SEE "ELASTOMERIC BEARING DETAILS" SHEET.
7. SEE "GENERAL DRAWING GENERAL NOTES" SHEET FOR ADDITIONAL NOTES.
8. SEE SHEET 2 OF 3 FOR SECTIONS CALLED OUT ON ELEVATION VIEW.

NORTH CAROLINA PROFESSIONAL SEAL 28479 ENGINEER KEVIN G. BAILEY 5-30-13

PROJECT NO. U-2524C
GUILFORD COUNTY
STATION: POT 407+73.35 -L-
= POT 29+32.06 -Y4-

SHEET 1 OF 3

STATE OF NORTH CAROLINA
DEPARTMENT OF TRANSPORTATION
RALEIGH

SUBSTRUCTURE
BENT 3
PLAN & ELEVATION

-LEFT LANE-

REVISIONS						SHEET NO.
NO.	BY:	DATE:	NO.	BY:	DATE:	S-181
1			3			TOTAL SHEETS
2			4			836

STV / Ralph Whitehead Associates, Inc.
1000 West Morehead St., Ste. 200
Charlotte, NC 28208
NC License No. F-0991

DRAWN BY : JMP	DATE : 11-12	DESIGN ENGINEER OF RECORD: K. BAILEY	DATE : 5-13
CHECKED BY : JAN	DATE : 12-12		

5/30/2013 5:00:50 PM R:\station\Finals\Bent 03 - 1of 3.dgn

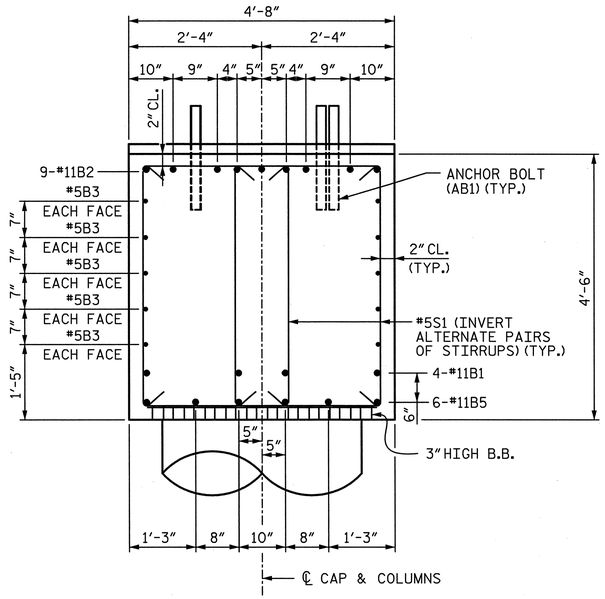

SECTION A-A

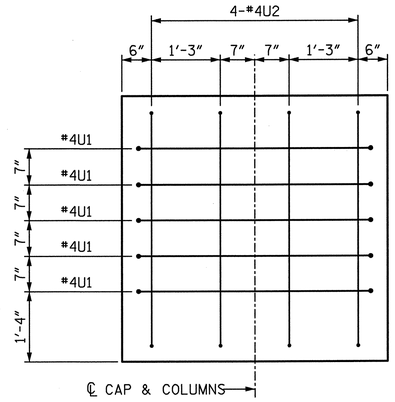

END VIEW B-B

(RIGHT END SHOWN, LEFT END SIMILAR)

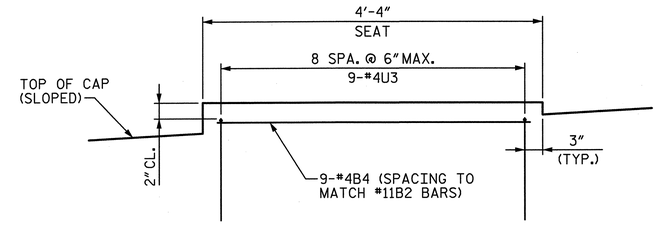

SEAT REINFORCEMENT DETAIL

(TYPICAL AT EACH BEARING SEAT)

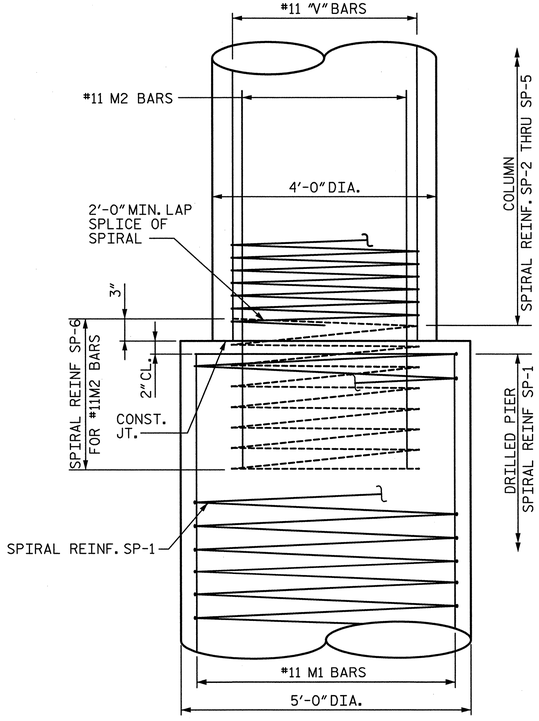

CONSTRUCTION JOINT DETAIL

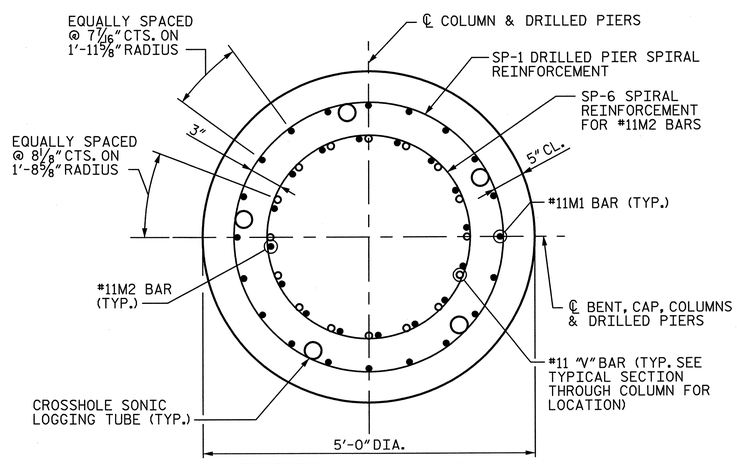

TYPICAL SECTION THROUGH DRILLED PIER

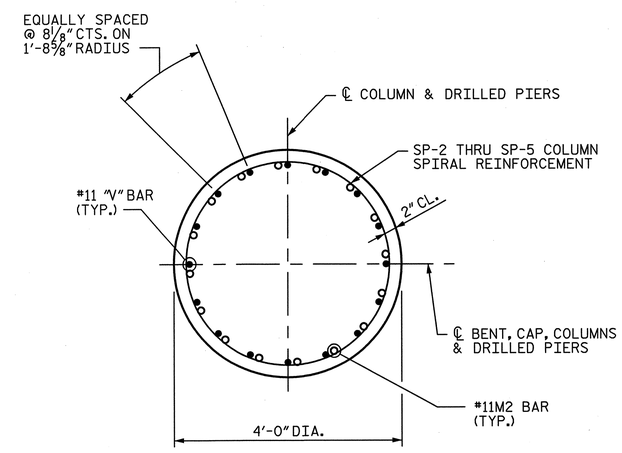

TYPICAL SECTION THROUGH COLUMN

NORTH CAROLINA PROFESSIONAL SEAL 28479 ENGINEER KEVIN G. BAILEY 5-30-13

PROJECT NO. U-2524C

GUILFORD COUNTY

STATION: POT 407+73.35 -L-
= POT 29+32.06 -Y4-

SHEET 2 OF 3

STATE OF NORTH CAROLINA
DEPARTMENT OF TRANSPORTATION
RALEIGH

SUBSTRUCTURE
BENT 3
DETAILS

-LEFT LANE-

REVISIONS						SHEET NO.
NO.	BY:	DATE:	NO.	BY:	DATE:	S-182
1			3			TOTAL SHEETS
2			4			836

STV / Ralph Whitehead Associates, Inc.
1000 West Morehead St., Ste. 200
Charlotte, NC 28208
NC License No. F-0991

DRAWN BY : JMP	DATE : 11-12	DESIGN ENGINEER OF RECORD: K. BAILEY	DATE : 5-13
CHECKED BY : JAN	DATE : 12-12		

5/30/2013 5:00:55 PM R:\ustation\Finals\Bent 03- 2 of 3.dgn

QUANTITIES

REINFORCING STEEL	LBS.	50,117
SPIRAL REINFORCING STEEL	LBS.	11,333
CLASS A CONCRETE : POUR 2 - COLUMNS	CU. YDS.	60.3
POUR 3 - CAP	CU. YDS.	52.0
TOTAL	CU. YDS.	112.3
5'-0"Ø DRILLED PIERS IN SOIL	L.F.	149
5'-0"Ø DRILLED PIERS NOT IN SOIL	L.F.	37
TOTAL 5'-0"Ø DRILLED PIERS	L.F.	186
PERMANENT STEEL CASING FOR 5'-0"Ø DRILLED PIERS	L.F.	74
DRILLED PIER CONCRETE : POUR 1	CU. YDS.	135.3
CSL TUBES	L.F.	960

BAR TYPES

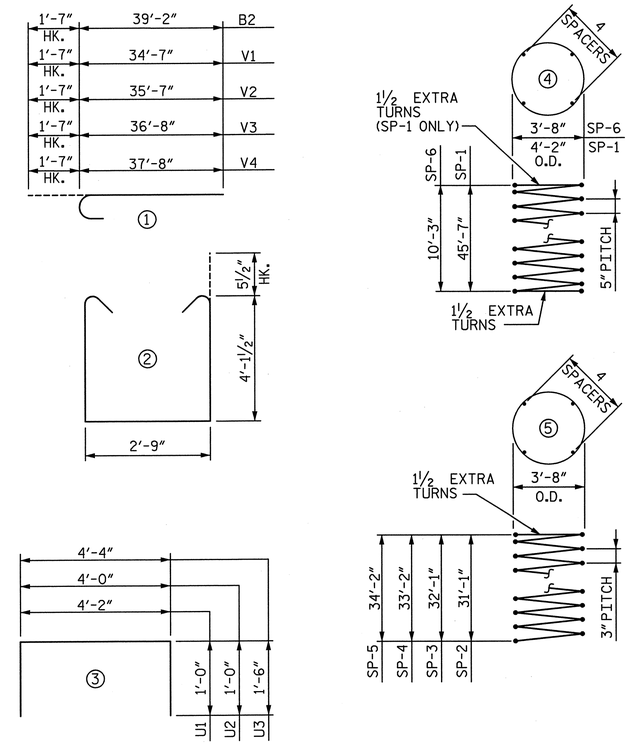

ALL BAR DIMENSIONS ARE OUT TO OUT

BILL OF MATERIAL

BAR	NO.	SIZE	TYPE	LENGTH	WEIGHT
B1	10	#11	STR.	43'-0"	2,285
B2	18	#11	①	40'-9"	3,897
B3	20	#5	STR.	33'-10"	706
B4	63	#4	STR.	4'-0"	168
B5	10	#11	STR.	31'-5"	1,669
M1	80	#11	STR.	45'-10"	19,481
M2	64	#11	STR.	19'-9"	6,716
S1	160	#5	②	11'-11"	1,989
U1	10	#4	③	6'-2"	42
U2	8	#4	③	6'-0"	33
U3	63	#4	③	7'-4"	309
V1	16	#11	①	36'-2"	3,074
V2	16	#11	①	37'-2"	3,159
V3	16	#11	①	38'-3"	3,252
V4	16	#11	①	39'-3"	3,337
SP-1	4	✱✱	④	1,453'-9"	6,065
SP-2	1	✱	⑤	1,435'-5"	958
SP-3	1	✱	⑤	1,481'-0"	989
SP-4	1	✱	⑤	1,530'-4"	1,022
SP-5	1	✱	⑤	1,575'-11"	1,053
SP-6	4	✱✱	④	298'-7"	1,246

✱✱ THE SP-1 AND SP-6 SPIRAL REINFORCING STEEL SHALL BE W31 OR D-31 COLD DRAWN WIRE OR #5 PLAIN OR DEFORMED BAR WITH A 5" PITCH.

✱ THE SP-2 THROUGH SP-5 SPIRAL REINFORCING STEEL SHALL BE W20 OR D-20 COLD DRAWN WIRE OR #4 PLAIN OR DEFORMED BAR WITH A 3" PITCH.

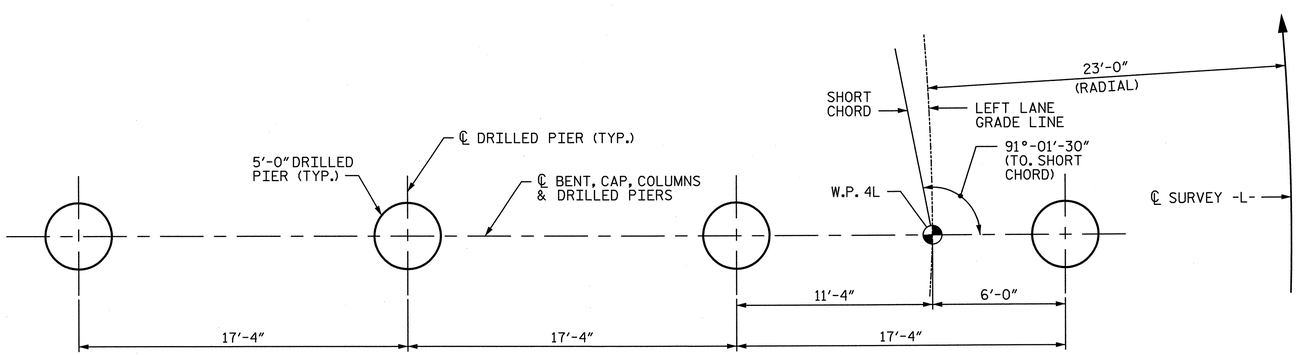

PLAN OF DRILLED PIERS

PROJECT NO. U-2524C

GUILFORD COUNTY

STATION: POT 407+73.35 -L-
= POT 29+32.06 -Y4-

SHEET 3 OF 3

NORTH CAROLINA PROFESSIONAL SEAL 28479 ENGINEER KEVIN G. BAILEY 5-30-13

STATE OF NORTH CAROLINA
DEPARTMENT OF TRANSPORTATION
RALEIGH

SUBSTRUCTURE
BENT 3
DETAILS & BILL OF MATERIAL

-LEFT LANE-

REVISIONS						SHEET NO.
NO.	BY:	DATE:	NO.	BY:	DATE:	S-183
1			3			TOTAL SHEETS
2			4			836

STV / Ralph Whitehead Associates, Inc.
1000 West Morehead St., Ste. 200
Charlotte, NC 28208
NC License No. F-0991

DRAWN BY : JMP	DATE : 11-12	DESIGN ENGINEER OF RECORD: K. BAILEY	DATE : 5-13
CHECKED BY : JAN	DATE : 12-12		

5/30/2013 5:00:59 PM R:\ustation\Finals\Bent 03- 3 of 3.dgn

NOTES:

1. ALL REINFORCING STEEL IN THE DRILLED PIERS IS INCLUDED IN THE PAY ITEMS FOR "REINFORCING STEEL" AND "SPIRAL COLUMN REINFORCING STEEL".
2. THE LOCATION OF THE CONSTRUCTION JOINT IN THE DRILLED PIERS IS BASED ON AN APPROXIMATE GROUND LINE ELEVATION. IF THE CONSTRUCTION JOINT IS ABOVE THE ACTUAL GROUND ELEVATION, THE CONTRACTOR SHALL PLACE THE CONSTRUCTION JOINT 1 FOOT BELOW THE GROUND LINE.
3. STIRRUPS AND "U BARS" IN CAP MAY BE SHIFTED SLIGHTLY AS NECESSARY TO CLEAR ANCHOR BOLTS.
4. HOOKS ON BARS MAY BE TURNED AS NECESSARY FOR PLACING REINFORCING STEEL.
5. A CONSTRUCTION JOINT AT MID-HEIGHT OF COLUMN IS PERMITTED.
6. FOR "AB1" ANCHOR BOLTS, SEE "ELASTOMERIC BEARING DETAILS" SHEET.
7. SEE "GENERAL DRAWING GENERAL NOTES" SHEET FOR ADDITIONAL NOTES.
8. SEE SHEET 2 OF 3 FOR SECTIONS CALLED OUT ON ELEVATION VIEW.

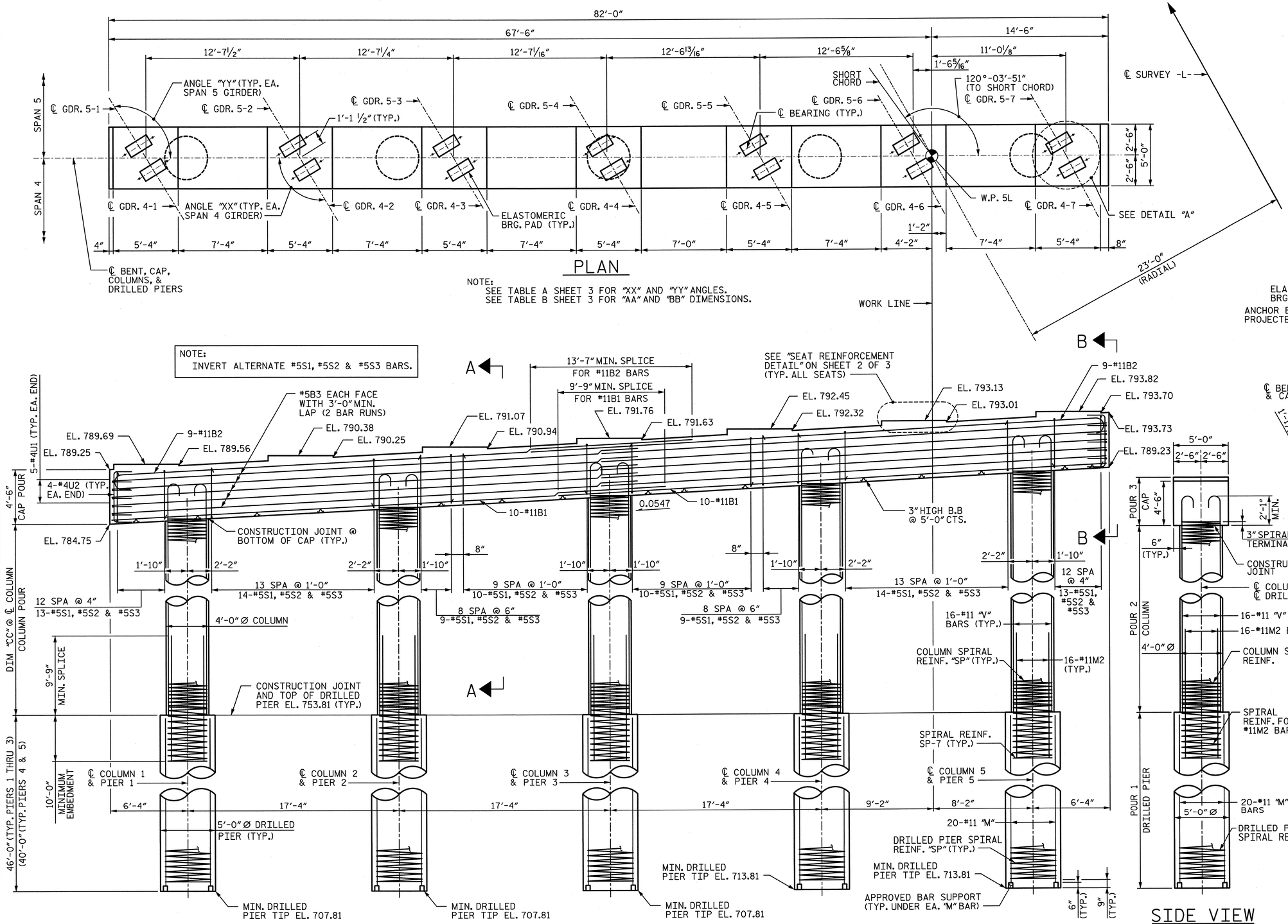

PLAN

NOTE:
SEE TABLE A SHEET 3 FOR "XX" AND "YY" ANGLES.
SEE TABLE B SHEET 3 FOR "AA" AND "BB" DIMENSIONS.

ELEVATION

NOTES:
SEE TABLE C SHEET 3 FOR "CC" DIMENSIONS.
SEE TABLE D SHEET 3 FOR COLUMN & DRILLED PIER REINFORCING.

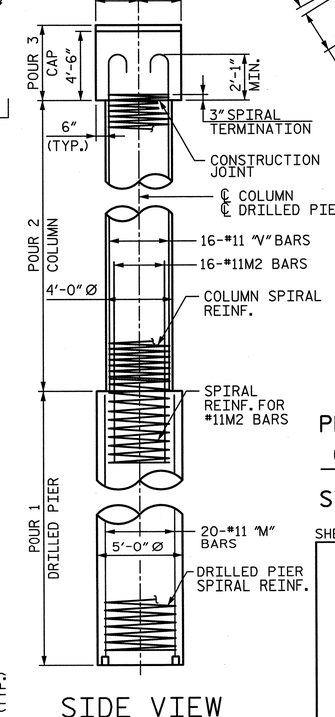

SIDE VIEW

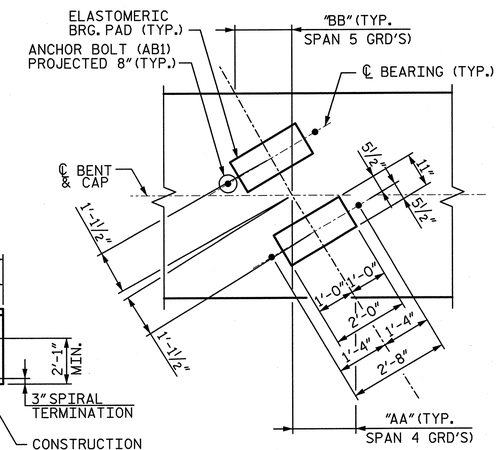

DETAIL "A"

(TYP. AT EACH BRIDGE SEAT)

NOTE:
SEE TABLE B SHEET 3 FOR "AA" AND "BB" DIMENSIONS.

NORTH CAROLINA PROFESSIONAL SEAL 28479 ENGINEER KEVIN G. BAILEY 5-30-13

PROJECT NO. U-2524C

GUILFORD COUNTY

STATION: POT 407+73.35 -L-
= POT 29+32.06 -Y4-

SHEET 1 OF 3

STATE OF NORTH CAROLINA
DEPARTMENT OF TRANSPORTATION
RALEIGH

SUBSTRUCTURE
BENT 4
PLAN & ELEVATION

-LEFT LANE-

REVISIONS						SHEET NO.
NO.	BY:	DATE:	NO.	BY:	DATE:	S-184
1			3			TOTAL SHEETS
2			4			23

STV / Ralph Whitehead Associates, Inc.
1000 West Morehead St., Ste. 200
Charlotte, NC 28208
NC License No. F-0991

DRAWN BY : JMP	DATE : 11-12	DESIGN ENGINEER OF RECORD: K. BAILEY	DATE : 5-13
CHECKED BY : JAN	DATE : 12-12		

5/30/2013 5:01:03 PM R:\ustation\Finals\Bent 04 - 1of 3.dgn

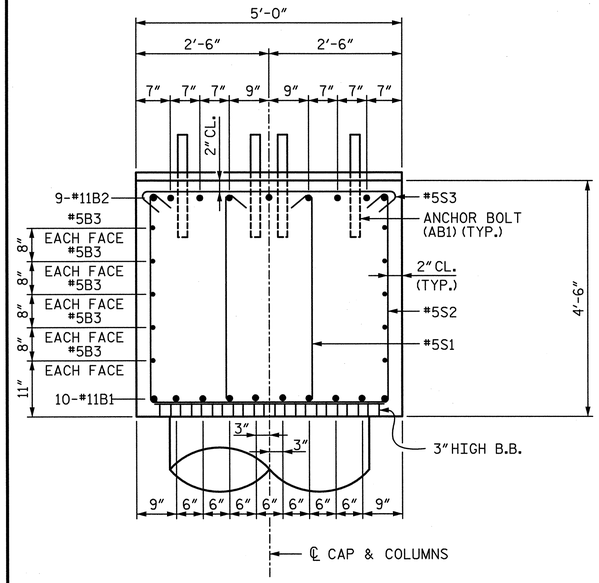

SECTION A-A

NOTE:
INVERT ALTERNATE #5S1, #5S2 & #5S3 BARS.

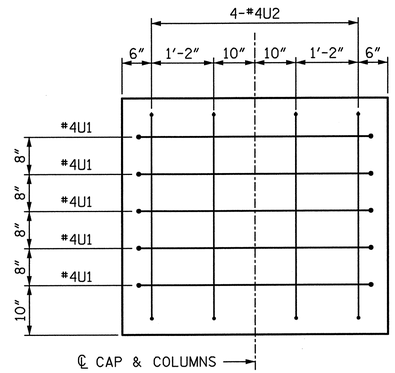

END VIEW B-B

(RIGHT END SHOWN, LEFT END SIMILAR)

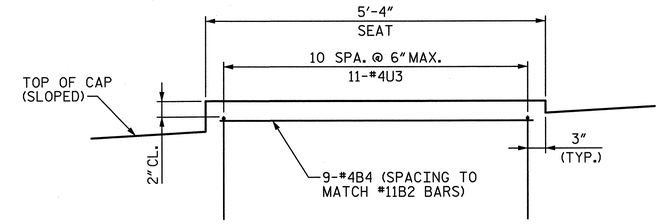

SEAT REINFORCEMENT DETAIL

(TYPICAL AT EACH BEARING SEAT)

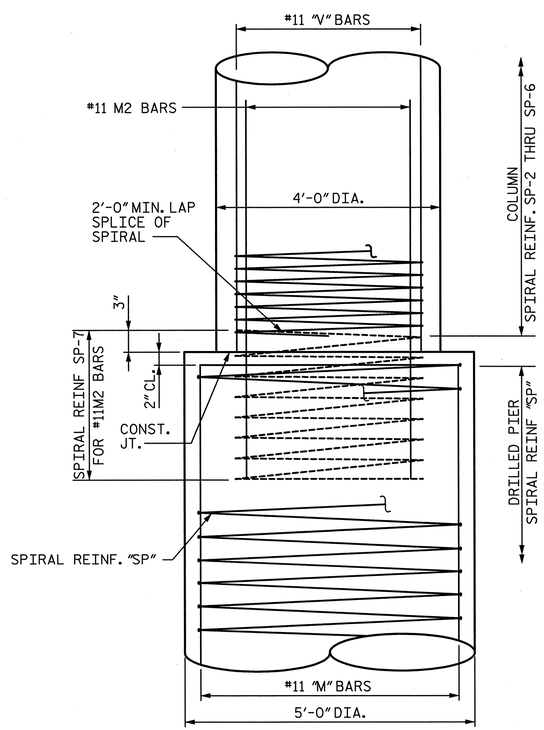

CONSTRUCTION JOINT DETAIL

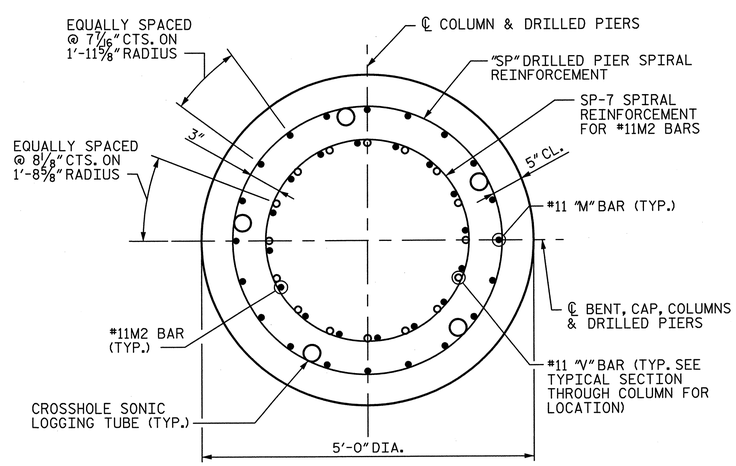

TYPICAL SECTION THROUGH DRILLED PIER

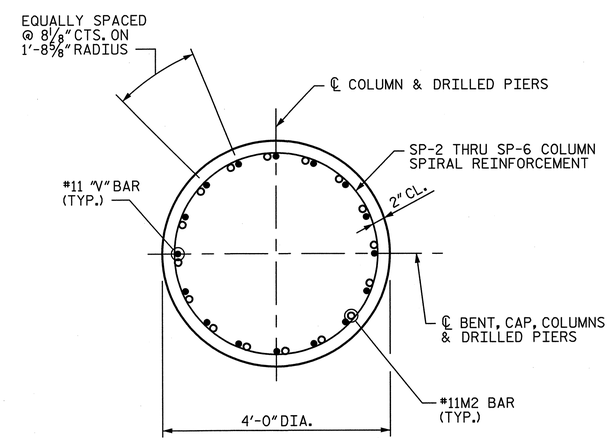

TYPICAL SECTION THROUGH COLUMN

NORTH CAROLINA PROFESSIONAL SEAL 28479 ENGINEER KEVIN G. BAILEY 5-30-13

PROJECT NO. U-2524C
GUILFORD COUNTY
STATION: POT 407+73.35 -L-
= POT 29+32.06 -Y4-

SHEET 2 OF 3

STATE OF NORTH CAROLINA
DEPARTMENT OF TRANSPORTATION
RALEIGH

SUBSTRUCTURE
BENT 4
DETAILS

-LEFT LANE-

DRAWN BY : JMP	DATE : 11-12	DESIGN ENGINEER OF RECORD: K. BAILEY	DATE : 5-13
CHECKED BY : JAN	DATE : 12-12		

STV / Ralph Whitehead Associates, Inc.
1000 West Morehead St., Ste. 200
Charlotte, NC 28208
NC License No. F-0991

REVISIONS								SHEET NO.
NO.	BY:	DATE:	NO.	BY:	DATE:			S-185
1			3					TOTAL SHEETS
2			4					836

5/30/2013 5:01:08 PM R:\ustation\Finals\Bent 04- 2 of 3.dgn

TABLE A	
PLAN VIEW ANGLES	
GDR.	ANGLE "XX"
4-1	121°-42′-44″
4-2	121°-14′-03″
4-3	120°-42′-45″
4-4	120°-08′-23″
4-5	119°-30′-23″
4-6	118°-48′-04″
4-7	118°-00′-34″
	ANGLE "YY"
5-1	121°-37′-15″
5-2	121°-20′-38″
5-3	120°-03′-49″
5-4	120°-46′-44″
5-5	120°-29′-18″
5-6	120°-11′-24″
5-7	119°-52′-56″

TABLE B	
PLAN VIEW DIMENSIONS	
GDR.	DIMENSION "AA"
4-1	1′-6 9/16″
4-2	1′-6 3/16″
4-3	1′-5 13/16″
4-4	1′-5 7/16″
4-5	1′-5″
4-6	1′-4 1/2″
4-7	1′-3 15/16″
	DIMENSION "BB"
5-1	1′-6 1/2″
5-2	1′-6 1/4″
5-3	1′-6 1/16″
5-4	1′-5 7/8″
5-5	1′-5 11/16″
5-6	1′-5 1/2″
5-7	1′-5 1/4″

TABLE C	
ELEVATION VIEW DIMENSIONS	
COL.	DIMENSION "CC"
1	31′-3 1/2″
2	32′-2 7/8″
3	33′-2 1/4″
4	34′-1 5/8″
5	35′-1″

QUANTITIES			
REINFORCING STEEL		LBS.	61,152
SPIRAL REINFORCING STEEL		LBS.	13,823
CLASS A CONCRETE :	POUR 2 - COLUMNS	CU. YDS.	77.3
	POUR 3 - CAP	CU. YDS.	70.3
	TOTAL	CU. YDS.	147.6
5′-0″ Ø DRILLED PIERS IN SOIL		L.F.	171
5′-0″ Ø DRILLED PIERS NOT IN SOIL		L.F.	47
TOTAL 5′-0″ Ø DRILLED PIERS		L.F.	218
DRILLED PIER CONCRETE :	POUR 1	CU. YDS.	158.5
CSL TUBES		L.F.	1,128

TABLE D

COLUMNS & DRILLED PIERS REINFORCING BILL OF MATERIAL

COLUMN/ DRILLED PIER	BAR	NO.	SIZE	TYPE	●	LENGTH	WEIGHT	DRILLED PIER LENGTH
1	M2	16	#11	STR.		19′-9″	1,679	46′-0″
	M11	20	#11	STR.		45′-4″	4,817	
	V1	16	#11	1	35′-1″	36′-8″	3,117	
	SP-2	1	✳	5	31′-7	1,458′-2″	974	
	SP-7	1	✳✳	4	10′-3″	298′-7″	311	
	SP-11	1	✳✳	4	45′-1″	1,438′-2″	1,500	
2	M2	16	#11	STR.		19′-9″	1,679	46′-0″
	M11	20	#11	STR.		45′-4″	4,817	
	V2	16	#11	1	36′-0″	37-7″	3,195	
	SP-3	1	✳	5	32′-6″	1,499′-11″	1,002	
	SP-7	1	✳✳	4	10′-3″	298′-7″	311	
	SP-11	1	✳✳	4	45′-1″	1,438′-2″	1,500	
3	M2	16	#11	STR.		19′-9″	1,679	46′-0″
	M11	20	#11	STR.		45′-4″	4,817	
	V3	16	#11	1	37′-0″	38′-7″	3,280	
	SP-4	1	✳	5	33′-6″	1,545′-6″	1,032	
	SP-7	1	✳✳	4	10′-3″	298′-7″	311	
	SP-11	1	✳✳	4	45′-1″	1,438′-2″	1,500	
4	M2	16	#11	STR.		19′-9″	1,679	40′-0″
	M12	20	#11	STR.		39-4″	4,180	
	V4	16	#11	1	37′-11″	39′-6″	3,358	
	SP-5	1	✳	5	34′-5″	1,587′-3″	1,060	
	SP-7	1	✳✳	4	10′-3″	298′-7″	311	
	SP-12	1	✳✳	4	39′-1″	1,252′-0″	1,306	
5	M2	16	#11	STR.		19′-9″	1,679	40′-0″
	M12	20	#11	STR.		39-4″	4,180	
	V5	16	#11	1	38′-10″	40′-5″	3,436	
	SP-6	1	✳	5	35′-4″	1,629′-1″	1,088	
	SP-7	1	✳✳	4	10′-3″	298′-7″	311	
	SP-12	1	✳✳	4	39′-1″	1,252′-0″	1,306	

✳✳ THE SP-11, SP-12 AND SP-7 SPIRAL REINFORCING STEEL SHALL BE W31 OR D-31 COLD DRAWN WIRE OR #5 PLAIN OR DEFORMED BAR WITH A 5″PITCH.

✳ THE SP-2 THROUGH SP-6 SPIRAL REINFORCING SHALL BE W20 OR D-20 COLD DRAWN WIRE OR #4 PLAIN OR DEFORMED BAR WITH A 3″PITCH.

BAR TYPES

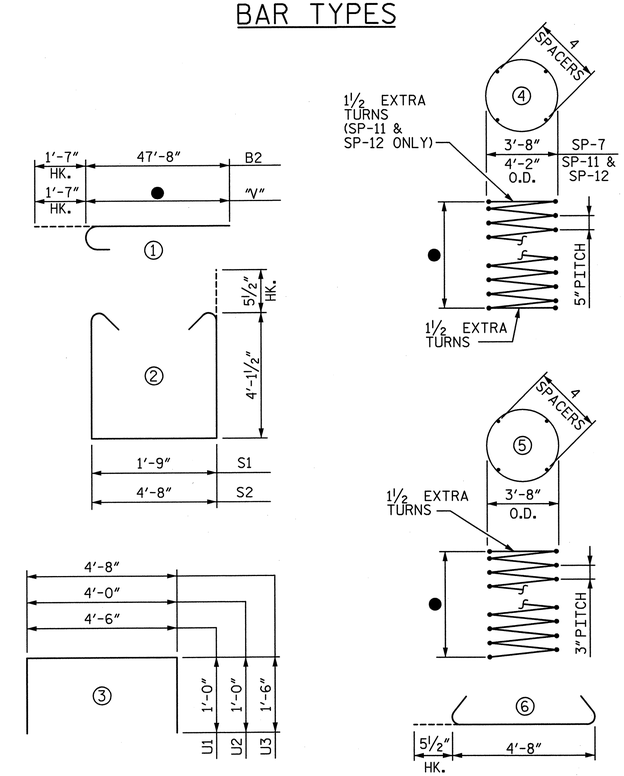

ALL BAR DIMENSIONS ARE OUT TO OUT

CAP REINFORCING BILL OF MATERIAL

BAR	NO.	SIZE	TYPE	LENGTH	WEIGHT
B1	18	#11	STR.	45′-9″	4,375
B2	18	#11	1	49′-3″	4,710
B3	20	#5	STR.	42′-4″	883
B4	63	#4	STR.	5′-0″	210
S1	92	#5	2	10′-11″	1,048
S2	92	#5	2	13′-10″	1,327
S3	92	#5	6	5′-7″	536
U1	10	#4	3	6′-6″	44
U2	8	#4	3	6′-0″	33
U3	77	#4	3	7′-8″	394

NOTE:

FOR ● AND COLUMNS & DRILLED PIERS REINFORCING BILL OF MATERIAL, SEE TABLE D THIS SHEET.

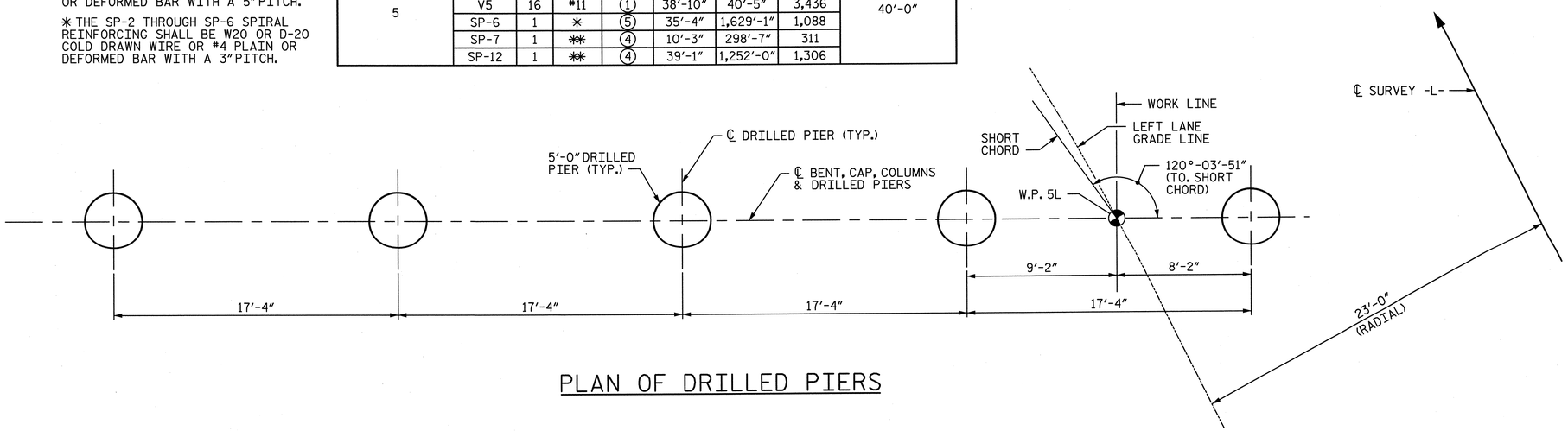

PLAN OF DRILLED PIERS

NORTH CAROLINA PROFESSIONAL SEAL 28479 ENGINEER KEVIN G. BAILEY 5-30-13

PROJECT NO. U-2524C

GUILFORD COUNTY

STATION: POT 407+73.35 -L-
= POT 29+32.06 -Y4-

SHEET 3 OF 3

STATE OF NORTH CAROLINA
DEPARTMENT OF TRANSPORTATION
RALEIGH

SUBSTRUCTURE
BENT 4
DETAILS & BILL OF MATERIAL

-LEFT LANE-

REVISIONS						SHEET NO.
NO.	BY:	DATE:	NO.	BY:	DATE:	S-186
1			3			TOTAL SHEETS
2			4			83

STV / Ralph Whitehead Associates, Inc.
1000 West Morehead St., Ste. 200
Charlotte, NC 28208
NC License No. F-0991

DRAWN BY : JMP	DATE : 11-12	DESIGN ENGINEER OF RECORD: K. BAILEY	DATE : 5-13
CHECKED BY : JAN	DATE : 12-12		

5/30/2013 5:01:12 PM R:\ustration\Finals\Bent 04- 3 of 3.dgn

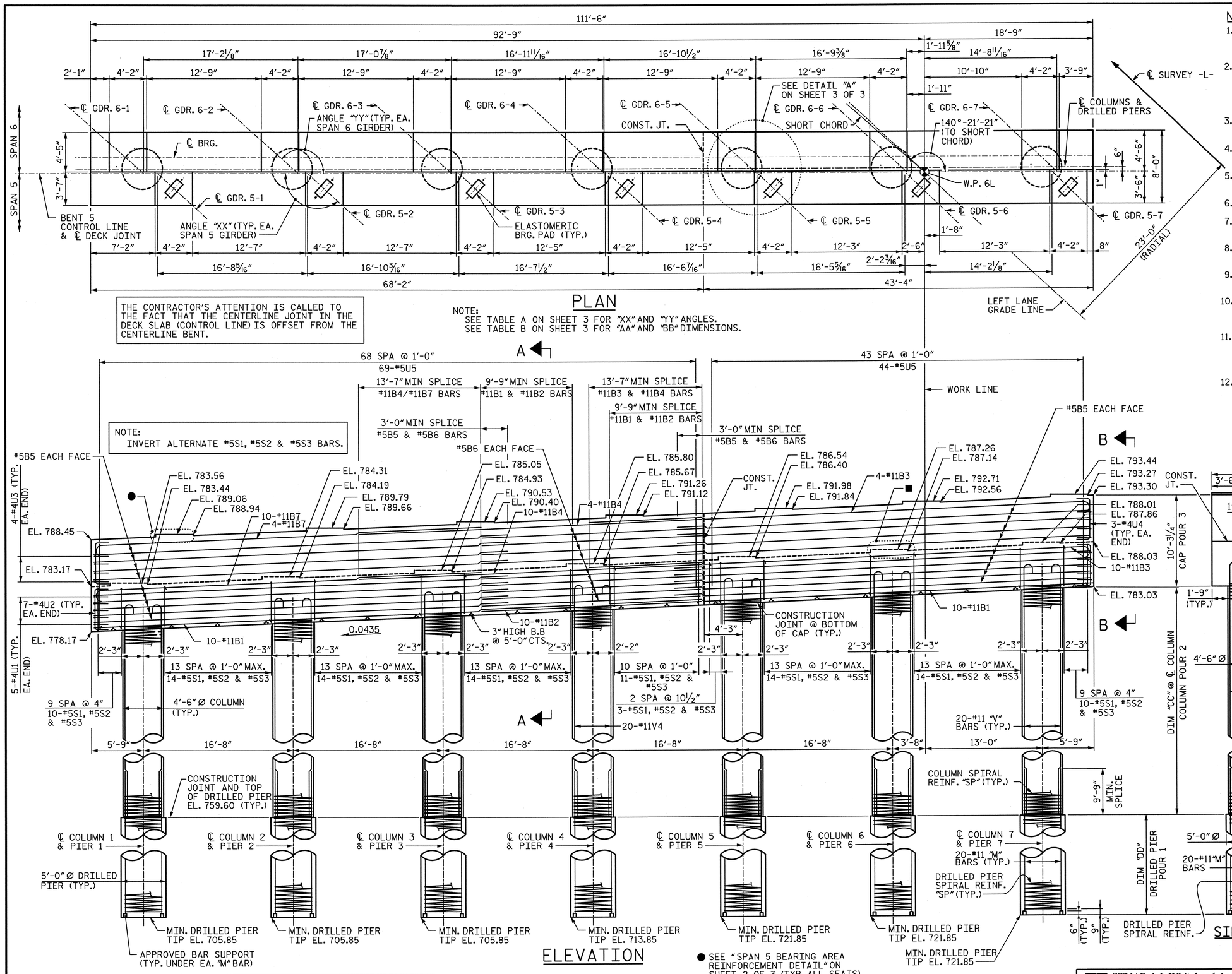

PLAN

THE CONTRACTOR'S ATTENTION IS CALLED TO THE FACT THAT THE CENTERLINE JOINT IN THE DECK SLAB (CONTROL LINE) IS OFFSET FROM THE CENTERLINE BENT.

NOTE:
SEE TABLE A ON SHEET 3 FOR "XX" AND "YY" ANGLES.
SEE TABLE B ON SHEET 3 FOR "AA" AND "BB" DIMENSIONS.

NOTE:
INVERT ALTERNATE #5S1, #5S2 & #5S3 BARS.

ELEVATION

SIDE VIEW

● SEE "SPAN 5 BEARING AREA REINFORCEMENT DETAIL" ON SHEET 2 OF 3 (TYP. ALL SEATS)

■ SEE "SPAN 6 BEARING AREA REINFORCEMENT DETAIL" ON SHEET 2 OF 3 (TYP. ALL SEATS)

NOTES:
SEE TABLE C ON SHEET 3 FOR DIMENSION "CC" AND "DD".
SEE TABLE D ON SHEET 3 FOR COLUMN & DRILLED PIER REINFORCING.

NOTES:

1. ALL REINFORCING STEEL IN THE DRILLED PIERS IS INCLUDED IN THE PAY ITEMS FOR "REINFORCING STEEL" AND "SPIRAL COLUMN REINFORCING STEEL".
2. THE LOCATION OF THE CONSTRUCTION JOINT IN THE DRILLED PIERS IS BASED ON AN APPROXIMATE GROUND LINE ELEVATION. IF THE CONSTRUCTION JOINT IS ABOVE THE ACTUAL GROUND ELEVATION, THE CONTRACTOR SHALL PLACE THE CONSTRUCTION JOINT 1 FOOT BELOW THE GROUND LINE.
3. STIRRUPS AND "U BARS" IN CAP MAY BE SHIFTED SLIGHTLY AS NECESSARY TO CLEAR ANCHOR BOLTS.
4. HOOKS ON BARS MAY BE TURNED AS NECESSARY FOR PLACING REINFORCING STEEL.
5. A CONSTRUCTION JOINT AT MID-HEIGHT OF COLUMN IS PERMITTED.
6. FOR 1½" Ø ANCHOR BOLTS, SEE "POT BEARING DETAILS" SHEET.
7. FOR "AB1" ANCHOR BOLTS, SEE "ELASTOMERIC BEARING DETAILS" SHEET.
8. SEE "GENERAL DRAWING GENERAL NOTES" SHEET FOR ADDITIONAL NOTES.
9. SEE SHEET 2 OF 3 FOR SECTIONS CALLED OUT ON ELEVATION VIEW.
10. CONTRACTOR HAS THE OPTION TO USE SINGLE #11 BARS WITH A LENGTH OF 63'-0" INSTEAD OF THE M11 AND M12 SPLICED BARS IF AVAILABLE.
11. THE TOP SURFACE AREAS OF THE BENT CAPS SHALL BE CURED IN ACCORDANCE WITH THE STANDARD SPECIFICATIONS EXCEPT THE MEMBRANE CURING COMPOUND METHOD SHALL NOT BE USED.
12. FOR PIPE INSERT DETAILS, SEE "POT BEARING DETAILS" SHEETS.

NORTH CAROLINA PROFESSIONAL SEAL 28479 ENGINEER KEVIN G. BAILEY 5-30-13

PROJECT NO. U-2524C
GUILFORD COUNTY
STATION: POT 407+73.35 -L-
= POT 29+32.06 -Y4-

SHEET 1 OF 3

STATE OF NORTH CAROLINA
DEPARTMENT OF TRANSPORTATION
RALEIGH

SUBSTRUCTURE
BENT 5
PLAN & ELEVATION

-LEFT LANE-

DRAWN BY : JMP	DATE : 12-12	DESIGN ENGINEER OF RECORD: K. BAILEY	DATE : 5-13
CHECKED BY : JAN	DATE : 3-13		

STV / Ralph Whitehead Associates, Inc.
1000 West Morehead St., Ste. 200
Charlotte, NC 28208
NC License No. F-0991

REVISIONS								SHEET NO.
NO.	BY:	DATE:	NO.	BY:	DATE:			S-187
1			3					TOTAL SHEETS
2			4					836

5/30/2013 5:01:17 PM R:\ustation\Finals\Bent 05 - 1of 3.dgn

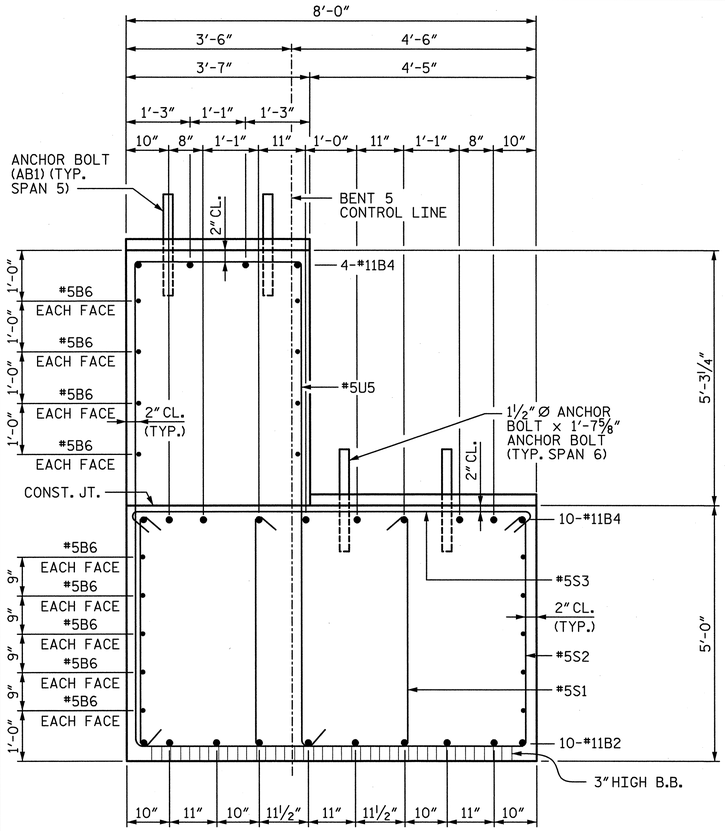

SECTION A-A

NOTE:
INVERT ALTERNATE #5S1, #5S2 & #5S3 BARS.

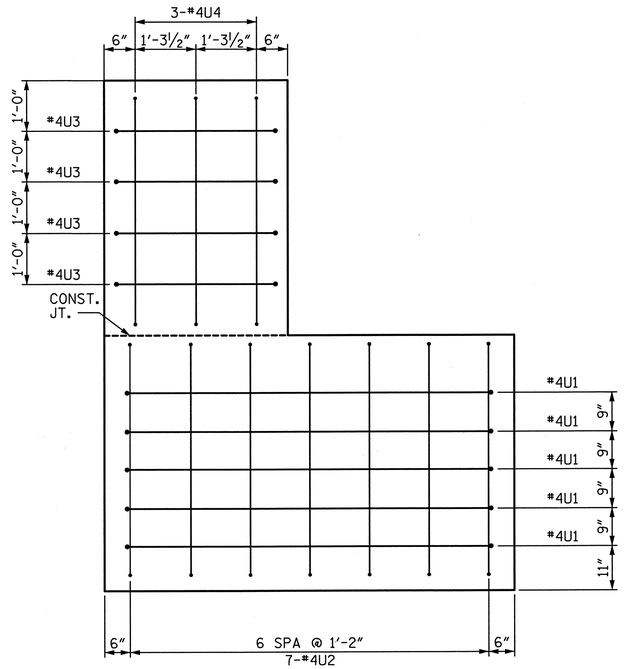

END VIEW B-B

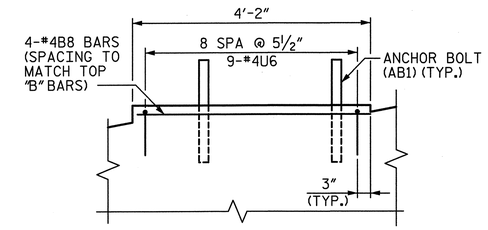

SPAN 5 BEARING AREA REINFORCEMENT DETAIL

(TYP. AT EACH BRIDGE SEAT)

C

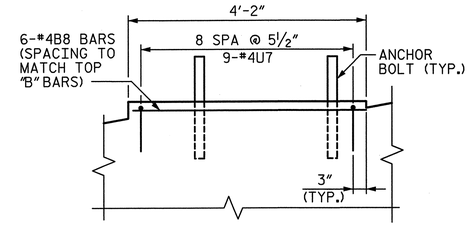

C

SPAN 6 BEARING AREA REINFORCEMENT DETAIL

(TYP. AT EACH BRIDGE SEAT)

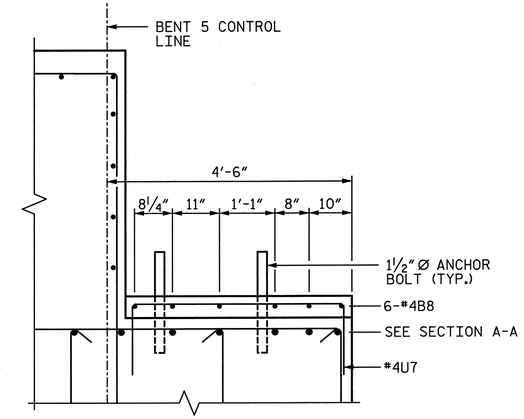

SECTION C-C

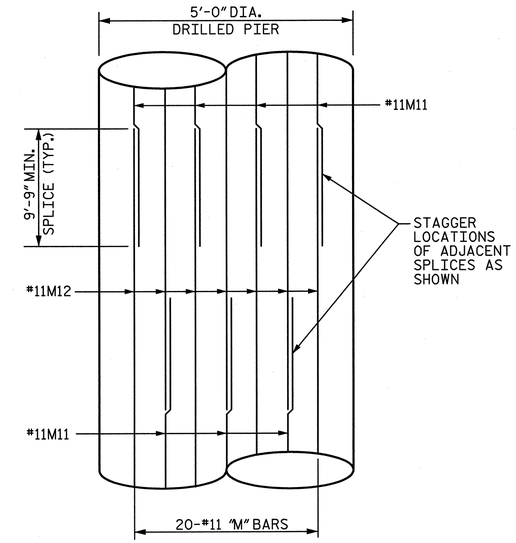

SPLICE DETAIL

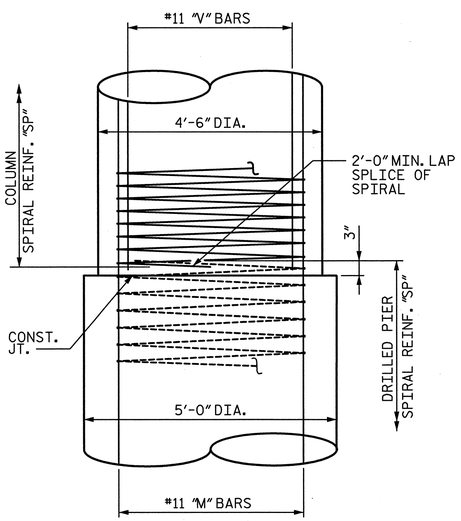

CONSTRUCTION JOINT DETAIL

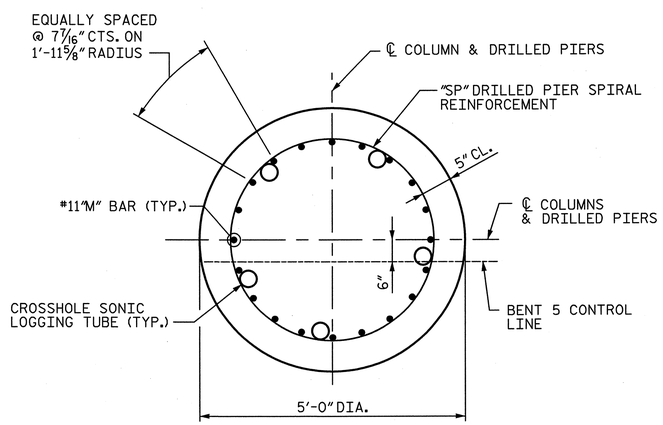

TYPICAL SECTION THROUGH DRILLED PIER

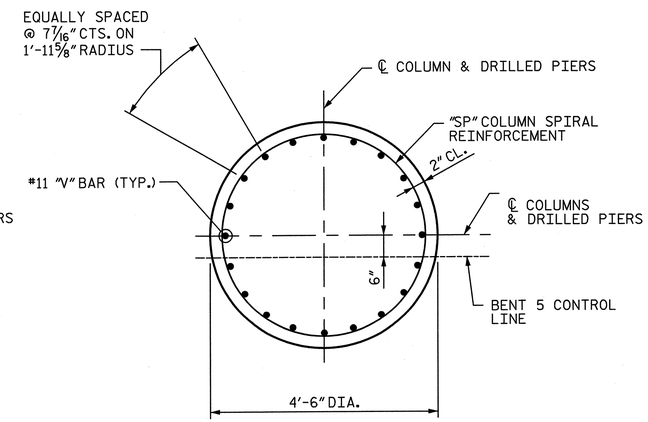

TYPICAL SECTION THROUGH COLUMN

PROJECT NO. U-2524C

GUILFORD COUNTY

STATION: POT 407+73.35 -L-
= POT 29+32.06 -Y4-

SHEET 2 OF 3

NORTH CAROLINA PROFESSIONAL SEAL 28479 ENGINEER KEVIN G. BAILEY
5-30-13

STATE OF NORTH CAROLINA
DEPARTMENT OF TRANSPORTATION
RALEIGH

SUBSTRUCTURE
BENT 5
DETAILS

-LEFT LANE-

REVISIONS							SHEET NO.
NO.	BY:	DATE:	NO.	BY:	DATE:		S-188
1			3				TOTAL SHEETS
2			4				836

STV / Ralph Whitehead Associates, Inc.
1000 West Morehead St., Ste. 200
Charlotte, NC 28208
NC License No. F-0991

DRAWN BY : JMP	DATE : 12-12	DESIGN ENGINEER OF RECORD: K. BAILEY	DATE : 5-13
CHECKED BY : JAN	DATE : 3-13		

5/30/2013 5:01:21 PM R:\ustation\Finals\Bent 05 - 2 of 3.dgn

TABLE D

COLUMNS & DRILLED PIERS REINFORCING BILL OF MATERIAL

COLUMN/ DRILLED PIER	BAR	NO.	SIZE	TYPE	●	LENGTH	WEIGHT	DRILLED PIER LENGTH
1	M11	20	#11	STR.		33'-0"	3,507	53'-9"
	M12	20	#11	STR.		42'-9"	4,543	
	V1	20	#11	1	23'-1"	24'-8"	2,621	
	SP-2	1	✳	5	19'-1"	1,010'-10"	675	
	SP-11	1	✳✳	4	53'-3"	1,674'-2"	1,746	
2	M11	20	#11	STR.		33'-0"	3,507	53'-9"
	M12	20	#11	STR.		42'-9"	4,543	
	V2	20	#11	1	23'-10"	25'-5"	2,701	
	SP-3	1	✳	5	19'-10"	1,049'-9"	701	
	SP-11	1	✳✳	4	53'-3"	1,674'-2"	1,746	
3	M11	20	#11	STR.		33'-0"	3,507	53'-9"
	M12	20	#11	STR.		42'-9"	4,543	
	V3	20	#11	1	24'-7"	26'-2"	2,780	
	SP-4	1	✳	5	20'-7"	1,088'-8"	727	
	SP-11	1	✳✳	4	53'-3"	1,674'-2"	1,746	
4	M13	20	#11	STR.		58'-0"	6,163	45'-9"
	V4	20	#11	1	25'-3"	26'-10"	2,851	
	SP-5	1	✳	5	21'-3"	1,123'-2"	750	
	SP-12	1	✳✳	4	45'-3"	1,425'-11"	1,487	
5	M14	20	#11	STR.		50'-0"	5,313	37'-9"
	V5	20	#11	1	26'-0"	27'-7"	2,931	
	SP-6	1	✳	5	22'-0	1,162'-1"	776	
	SP-13	1	✳✳	4	37'-3"	1,177'-7"	1,228	
6	M14	20	#11	STR.		50'-0"	5,313	37'-9"
	V6	20	#11	1	26'-9"	28'-4"	3,011	
	SP-7	1	✳	5	22'-9	1,201'-0"	802	
	SP-13	1	✳✳	4	37'-3"	1,177'-7"	1,228	
7	M14	20	#11	STR.		50'-0"	5,313	37'-9"
	V7	20	#11	1	27'-5"	29'-0"	3,082	
	SP-8	1	✳	5	23'-5	1,235'-6"	825	
	SP-13	1	✳✳	4	37'-3"	1,177'-7"	1,228	

THE CONTRACTOR'S ATTENTION IS CALLED TO THE FACT THAT THE LONGITUDINAL REINFORCEMENT FOR THE DRILLED PIERS IS DETAILED WITH 3 FEET OF EXTRA LENGTH.

SEE SPLICE DETAIL ON SHEET 2 OF 3 FOR M11 AND M12 DETAILS.

✳✳ THE SP-11, SP-12 AND SP-13 SPIRAL REINFORCING STEEL SHALL BE W31 OR D-31 COLD DRAWN WIRE OR #5 PLAIN OR DEFORMED BAR WITH A 5"PITCH.

✳ THE SP-2 THROUGH SP-8 SPIRAL REINFORCING SHALL BE W20 OR D-20 COLD DRAWN WIRE OR #4 PLAIN OR DEFORMED BAR WITH A 3"PITCH.

BAR TYPES

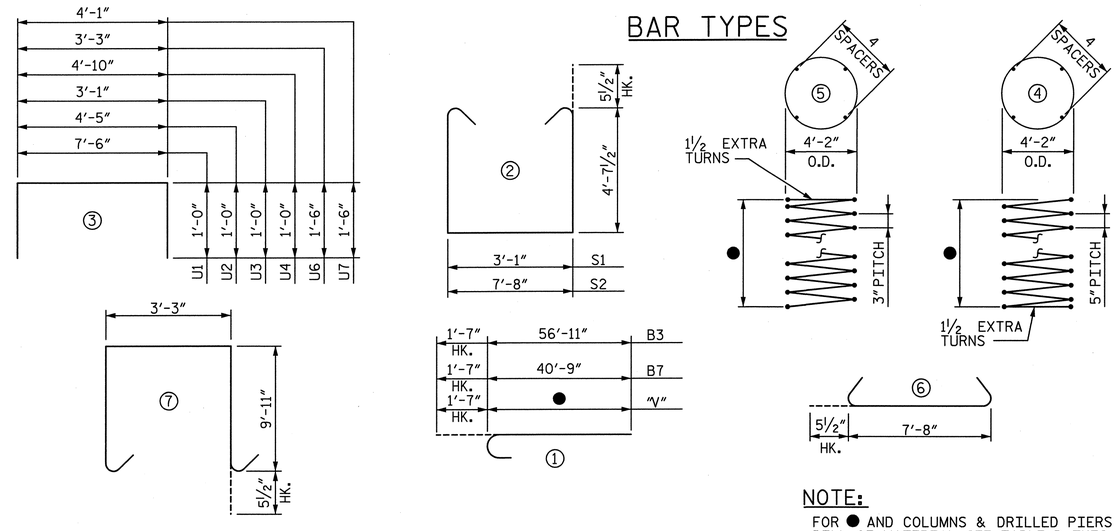

ALL BAR DIMENSIONS ARE OUT TO OUT

CAP REINFORCING BILL OF MATERIAL

BAR	NO.	SIZE	TYPE	LENGTH	WEIGHT
B1	20	#11	STR.	53'-1"	5,641
B2	10	#11	STR.	24'-7"	1,306
B3	14	#11	1	58'-6"	4,351
B4	14	#11	STR.	40'-9"	3,031
B5	36	#5	STR.	46'-5"	1,743
B6	18	#5	STR.	24'-7"	462
B7	14	#11	1	42'-4"	3,149
B8	70	#4	STR.	3'-10"	179
S1	104	#5	2	13'-3"	1,437
S2	104	#5	2	17'-10"	1,934
S3	104	#5	6	8'-7"	931
U1	10	#4	3	9'-6"	63
U2	14	#4	3	6'-5"	60
U3	8	#4	3	5'-1"	27
U4	6	#4	3	6'-10"	27
U5	113	#5	7	24'-0"	2,829
U6	63	#4	3	6'-3"	263
U7	63	#4	3	7'-1"	298

NOTE:
FOR ● AND COLUMNS & DRILLED PIERS REINFORCING BILL OF MATERIAL, SEE TABLE D THIS SHEET.

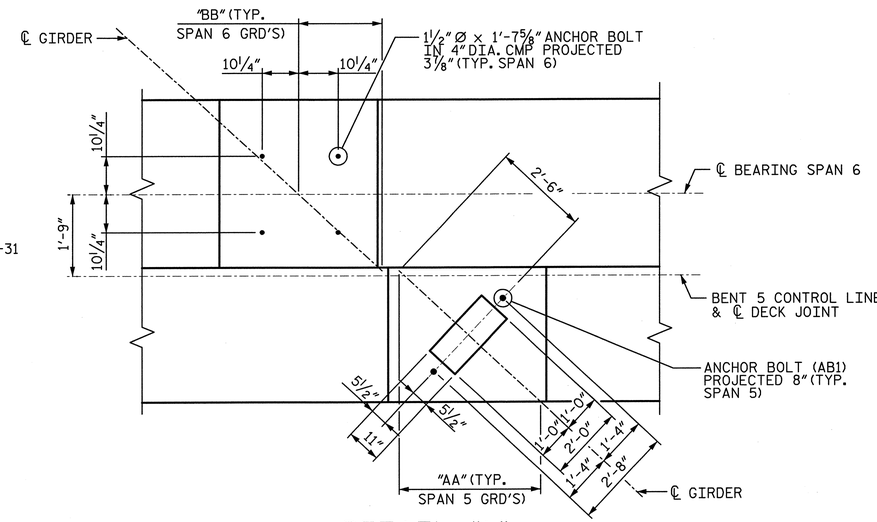

DETAIL "A"

(TYP. AT EACH BRIDGE SEAT)

NOTE:
SEE TABLE B THIS SHEET FOR "AA" AND "BB" DIMENSIONS.

TABLE A

PLAN VIEW ANGLES

	ANGLE "XX"
5-1	137°-56'-14"
5-2	137°-39'-38"
5-3	137°-22'-49"
5-4	137°-05'-44"
5-5	136°-48'-18"
5-6	136°-30'-24"
5-7	136°-11'-56"
	ANGLE "YY"
6-1	138°-51'-42"
6-2	138°-33'-25"
6-3	138°-15'-24"
6-4	137°-57'-39"
6-5	137°-40'-09"
6-6	137°-22'-56"
6-7	137°-05'-57"

ANGLE "YY" IS TANGENT TO GIRDER

TABLE B

PLAN VIEW DIMENSIONS

	DIMENSION "AA"
5-1	3'-10 9/16"
5-2	3'-10 1/16"
5-3	3'-9⅝"
5-4	3'-9 3/16"
5-5	3'-8¾"
5-6	3'-8¼"
5-7	3'-7 13/16"
	DIMENSION "BB"
6-1	2'-0 1/16"
6-2	1'-11 13/16"
6-3	1'-11 9/16"
6-4	1'-11 5/16"
6-5	1'-11 1/16"
6-6	1'-10⅞"
6-7	1'-10⅝"

TABLE C

ELEVATION VIEW DIMENSIONS

COL	DIMENSION "CC"
1	18'-9⅞"
2	19'-6½"
3	20'-3¼"
4	21'-0"
5	21'-8⅝"
6	22'-5⅜"
7	23'-2"
COL	DIMENSION "DD"
1	53'-9"
2	53'-9"
3	53'-9"
4	45'-9"
5	37'9"
6	37'9"
7	37'9"

QUANTITIES

REINFORCING STEEL	LBS.	93,960
SPIRAL REINFORCING STEEL	LBS.	15,665
CLASS A CONCRETE : POUR 2 - COLUMNS	CU. YDS.	86.7
POUR 3 - CAP	CU. YDS.	245.5
TOTAL	CU. YDS.	332.2
5'-0"Ø DRILLED PIERS IN SOIL	L.F.	284
5'-0"Ø DRILLED PIERS NOT IN SOIL	L.F.	37
TOTAL 5'-0"Ø DRILLED PIERS	L.F.	321
DRILLED PIER CONCRETE : POUR 1	CU. YDS.	232.9
CSL TUBES	L.F.	1,654

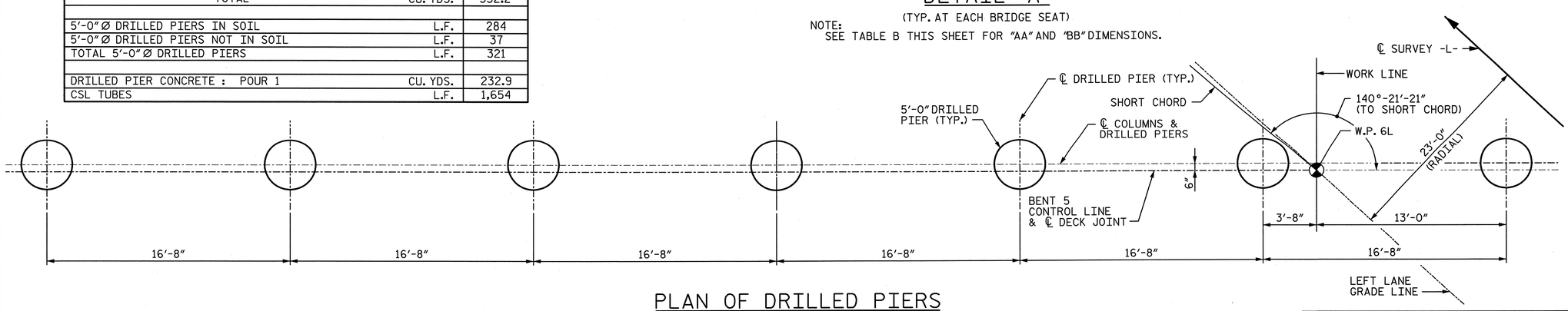

PLAN OF DRILLED PIERS

NORTH CAROLINA PROFESSIONAL SEAL 28479 ENGINEER KEVIN G. BAILEY 5-30-13

PROJECT NO. U-2524C
GUILFORD COUNTY
STATION: POT 407+73.35 -L-
= POT 29+32.06 -Y4-

SHEET 3 OF 3

STATE OF NORTH CAROLINA
DEPARTMENT OF TRANSPORTATION
RALEIGH

SUBSTRUCTURE
BENT 5
DETAILS & BILL OF MATERIAL

-LEFT LANE-

REVISIONS						SHEET NO.
NO.	BY:	DATE:	NO.	BY:	DATE:	S-189
1			3			TOTAL SHEETS
2			4			83

STV / Ralph Whitehead Associates, Inc.
1000 West Morehead St., Ste. 200
Charlotte, NC 28208
NC License No. F-0991

DRAWN BY : JMP DATE : 12-12
CHECKED BY : JAN DATE : 3-13
DESIGN ENGINEER OF RECORD: K. BAILEY DATE : 5-13

5/30/2013 5:01:26 PM R:\ustation\Finals\Bent 05- 3 of 3.dgn

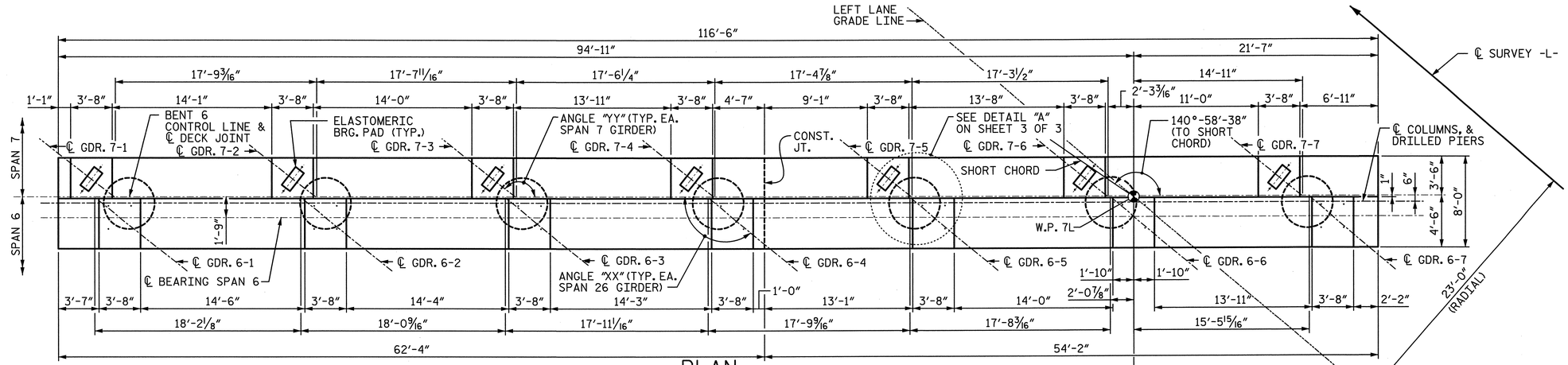

PLAN

THE CONTRACTOR'S ATTENTION IS CALLED TO THE FACT THAT THE CENTERLINE JOINT IN THE DECK SLAB (CONTROL LINE) IS OFFSET FROM THE CENTERLINE BENT.

NOTE:
SEE TABLE A SHEET 3 FOR "XX" AND "YY" ANGLES.
SEE TABLE B SHEET 3 FOR "AA" AND "BB" DIMENSIONS.

WORK LINE

NOTES:

1. ALL REINFORCING STEEL IN THE DRILLED PIERS IS INCLUDED IN THE PAY ITEMS FOR "REINFORCING STEEL" AND "SPIRAL COLUMN REINFORCING STEEL".
2. THE LOCATION OF THE CONSTRUCTION JOINT IN THE DRILLED PIERS IS BASED ON AN APPROXIMATE GROUND LINE ELEVATION. IF THE CONSTRUCTION JOINT IS ABOVE THE ACTUAL GROUND ELEVATION, THE CONTRACTOR SHALL PLACE THE CONSTRUCTION JOINT 1 FOOT BELOW THE GROUND LINE.
3. STIRRUPS AND "U BARS" IN CAP MAY BE SHIFTED SLIGHTLY AS NECESSARY TO CLEAR ANCHOR BOLTS.
4. HOOKS ON BARS MAY BE TURNED AS NECESSARY FOR PLACING REINFORCING STEEL.
5. A CONSTRUCTION JOINT AT MID-HEIGHT OF COLUMN IS PERMITTED.
6. FOR 1 1/2" Ø ANCHOR BOLTS, SEE "POT BEARING DETAILS" SHEET.
7. FOR "AB1" ANCHOR BOLTS, SEE "ELASTOMERIC BEARING DETAILS" SHEET.
8. SEE "GENERAL DRAWING GENERAL NOTES" SHEET FOR ADDITIONAL NOTES.
9. SEE SHEET 2 OF 3 FOR SECTIONS CALLED OUT ON ELEVATION VIEW.
10. THE TOP SURFACE AREAS OF THE BENT CAPS SHALL BE CURED IN ACCORDANCE WITH THE STANDARD SPECIFICATIONS EXCEPT THE MEMBRANE CURING COMPOUND METHOD SHALL NOT BE USED.
11. FOR PIPE INSERT DETAILS, SEE "POT BEARING DETAILS" SHEETS.

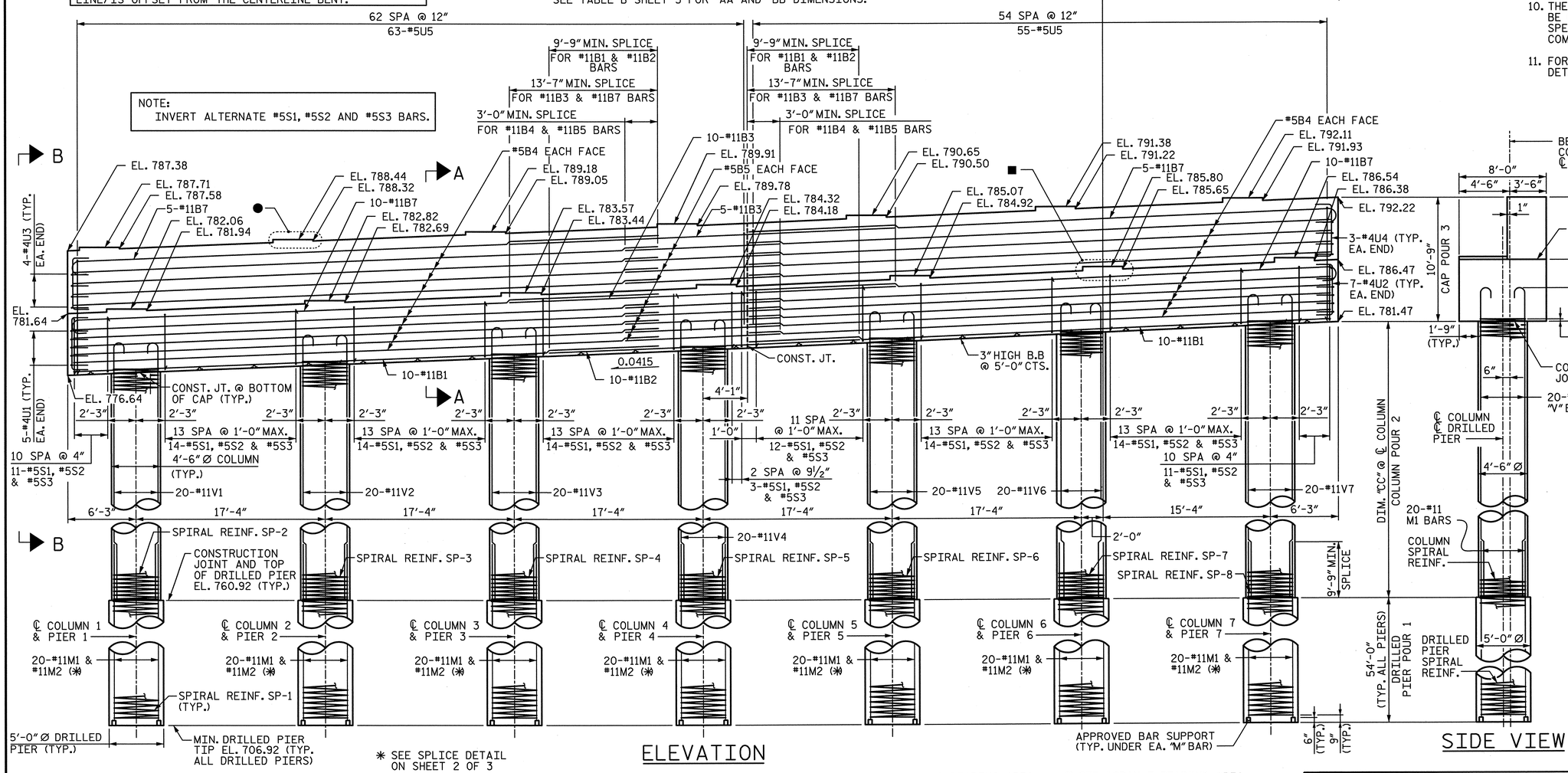

ELEVATION

SIDE VIEW

NOTE:
SEE TABLE C SHEET 3 FOR DIMENSION "CC".

■ SEE "SPAN 6 BEARING AREA REINFORCEMENT DETAIL" ON SHEET 2 OF 3 (TYP. ALL SEATS)

● SEE "SPAN 7 BEARING AREA REINFORCEMENT DETAIL" ON SHEET 2 OF 3 (TYP. ALL SEATS)

NORTH CAROLINA PROFESSIONAL SEAL 28479 ENGINEER KEVIN G. BAILEY 6-7-13

PROJECT NO. U-2524C
GUILFORD COUNTY
STATION: POT 407+73.35 -L-
= POT 29+32.06 -Y4-
SHEET 1 OF 3

STATE OF NORTH CAROLINA
DEPARTMENT OF TRANSPORTATION
RALEIGH

SUBSTRUCTURE
BENT 6
PLAN & ELEVATION

-LEFT LANE-

REVISIONS								SHEET NO.
NO.	BY:	DATE:	NO.	BY:	DATE:			S-190
1			3					TOTAL SHEETS
2			4					83

STV / Ralph Whitehead Associates, Inc.
1000 West Morehead St., Ste. 200
Charlotte, NC 28208
NC License No. F-0991

DRAWN BY : KDH	DATE : 12-12	DESIGN ENGINEER OF RECORD: K. BAILEY	DATE : 5-13
CHECKED BY : JAN	DATE : 3-13		

6/7/2013 10:34:02 AM R:\ustation\Finals\Bent 06 - 1of 3.dgn

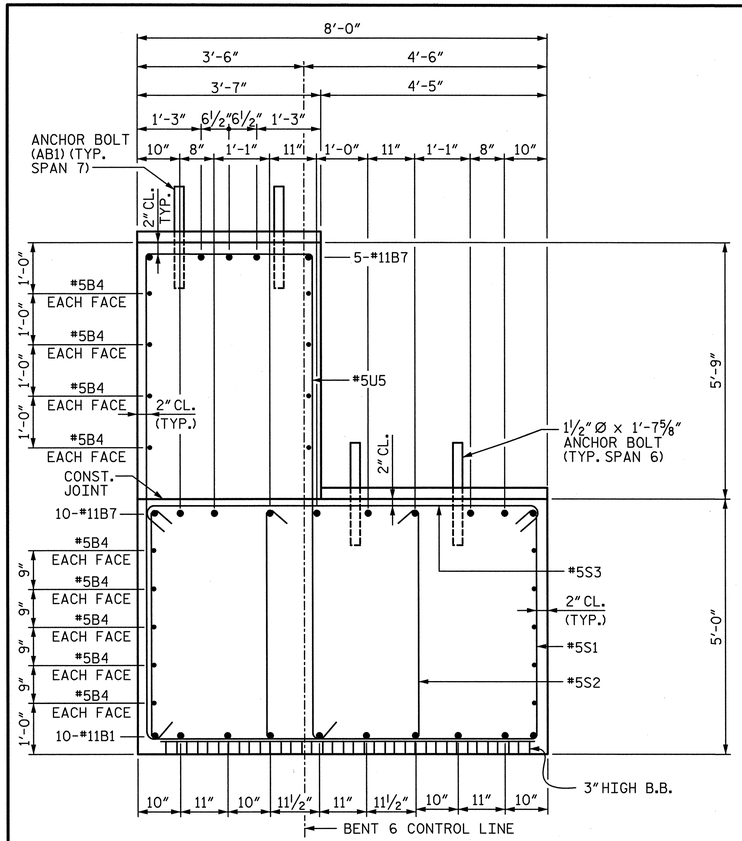

SECTION A-A

NOTE:
INVERT ALTERNATE #5S1, #5S2 AND #5S3 BARS.

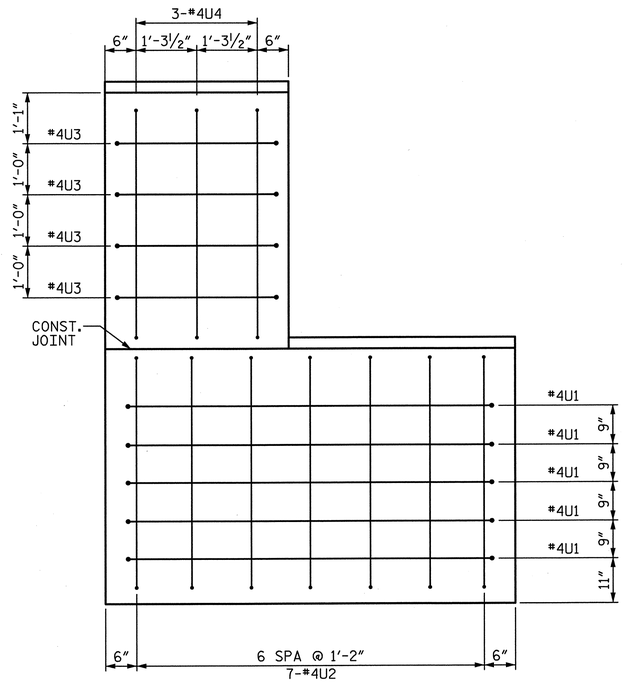

END VIEW B-B

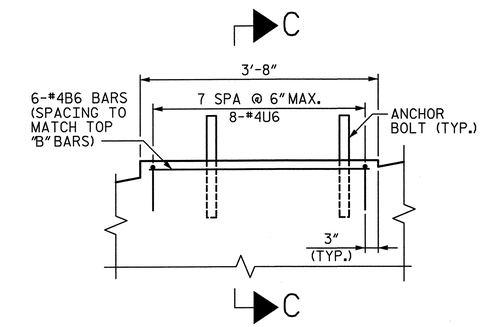

SPAN 6 BEARING AREA REINFORCEMENT DETAIL

(TYP. AT EACH BRIDGE SEAT)

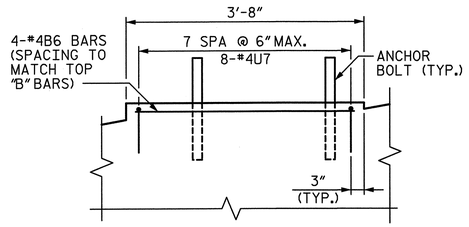

SPAN 7 BEARING AREA REINFORCEMENT DETAIL

(TYP. AT EACH BRIDGE SEAT)

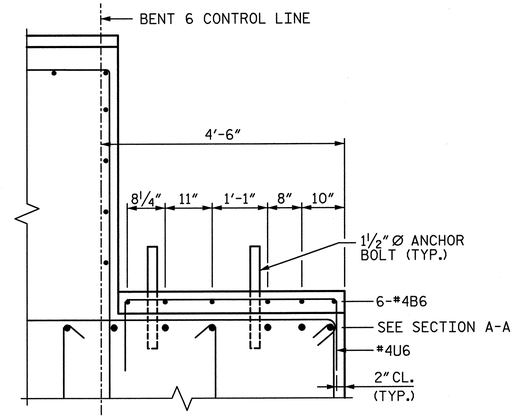

SECTION C-C

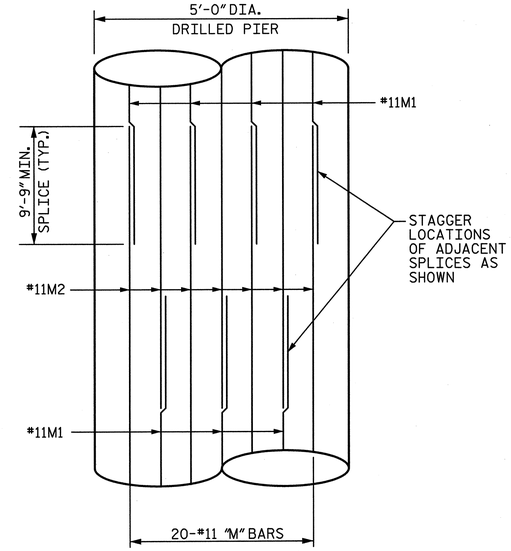

SPLICE DETAIL

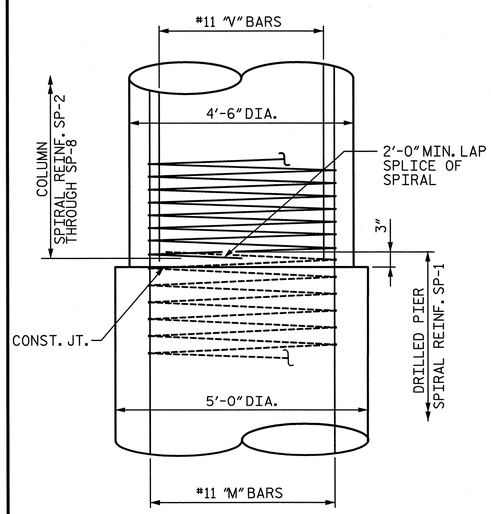

CONSTRUCTION JOINT DETAIL

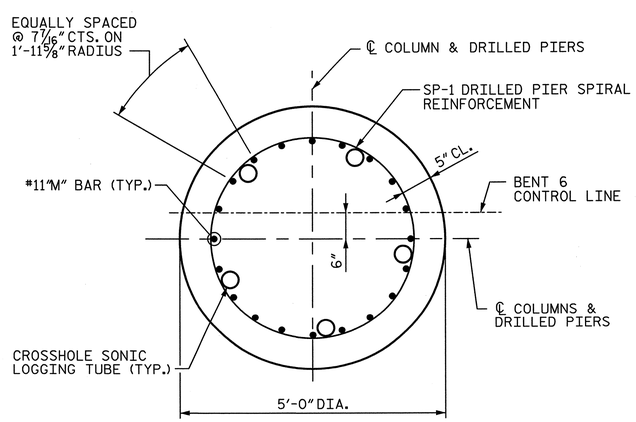

TYPICAL SECTION THROUGH DRILLED PIER

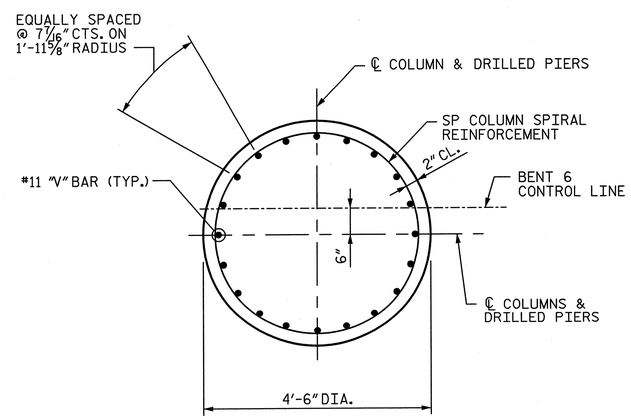

TYPICAL SECTION THROUGH COLUMN

NORTH CAROLINA PROFESSIONAL SEAL 28479 ENGINEER KEVIN G. BAILEY
5-30-13

PROJECT NO. U-2524C
GUILFORD COUNTY
STATION: POT 407+73.35 -L-
= POT 29+32.06 -Y4-

SHEET 2 OF 3

STATE OF NORTH CAROLINA
DEPARTMENT OF TRANSPORTATION
RALEIGH

SUBSTRUCTURE
BENT 6
DETAILS

-LEFT LANE-

STV / Ralph Whitehead Associates, Inc.
1000 West Morehead St., Ste. 200
Charlotte, NC 28208
NC License No. F-0991

REVISIONS						SHEET NO.
NO.	BY:	DATE:	NO.	BY:	DATE:	S-191
1			3			TOTAL SHEETS
2			4			836

DRAWN BY : KDH	DATE : 12-12	DESIGN ENGINEER OF RECORD: K. BAILEY	DATE : 5-13
CHECKED BY : JAN	DATE : 3-13		

5/30/2013 5:01:35 PM R:\ustation\Finals\Bent 06 - 2 of 3.dgn

TABLE A	
PLAN VIEW ANGLES	
	ANGLE "XX"
6-1	141°-36′-10″
6-2	141°-16′-01″
6-3	140°-56′-11″
6-4	140°-36′-41″
6-5	140°-17′-30″
6-6	139°-58′-36″
6-7	136°-40′-01″
	ANGLE "YY"
7-1	142°-17′-24″
7-2	142°-01′-36″
7-3	141°-46′-01″
7-4	141°-30′-40″
7-5	141°-15′-31″
7-6	141°-00′-35″
7-7	140°-45′-52″

ANGLE "XX" IS TANGENT TO GIRDER

TABLE B	
PLAN VIEW DIMENSIONS	
	DIMENSION "AA"
6-1	2′-2 1/2″
6-2	2′-2 1/8″
6-3	2′-1 7/8″
6-4	2′-1 9/16″
6-5	2′-1 1/4″
6-6	2′-1″
6-7	2′-0 11/16″
	DIMENSION "BB"
7-1	4′-6 3/8″
7-2	4′-5 7/8″
7-3	4′-5 3/8″
7-4	4′-4 7/8″
7-5	4′-4 3/8″
7-6	4′-3 15/16″
7-7	4′-3 1/2″

QUANTITIES		
REINFORCING STEEL	LBS.	103,963
SPIRAL REINFORCING STEEL	LBS.	16,844
CLASS A CONCRETE : POUR 2 - COLUMNS	CU. YDS.	74.9
POUR 3 - CAP	CU. YDS.	263.4
TOTAL	CU. YDS.	338.3
5′-0″ Ø DRILLED PIERS IN SOIL	L.F.	325
5′-0″ Ø DRILLED PIERS NOT IN SOIL	L.F.	53
TOTAL 5′-0″ Ø DRILLED PIERS	L.F.	378
DRILLED PIER CONCRETE : POUR 1	CU. YDS.	274.9
CSL TUBES	L.F.	1,943

TABLE C	
ELEVATION VIEW DIMENSIONS	
COL	DIMENSION "CC"
1	15′-11 7/8″
2	16′-8 3/8″
3	17′-5″
4	18′-1 5/8″
5	18′-10 1/4″
6	19′-6 7/8″
7	20′-3 1/2″

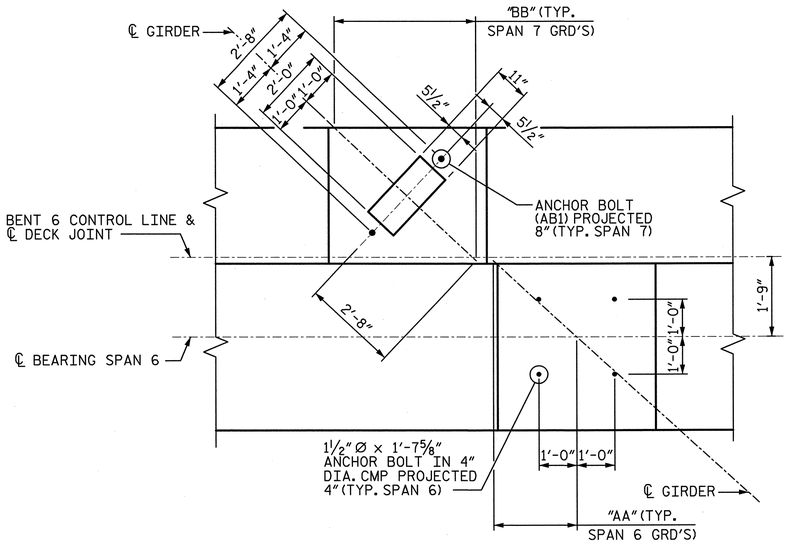

DETAIL "A"

(TYP. AT EACH BRIDGE SEAT)

NOTE:
SEE TABLE B THIS SHEET FOR "AA" AND "BB" DIMENSIONS.

BAR TYPES

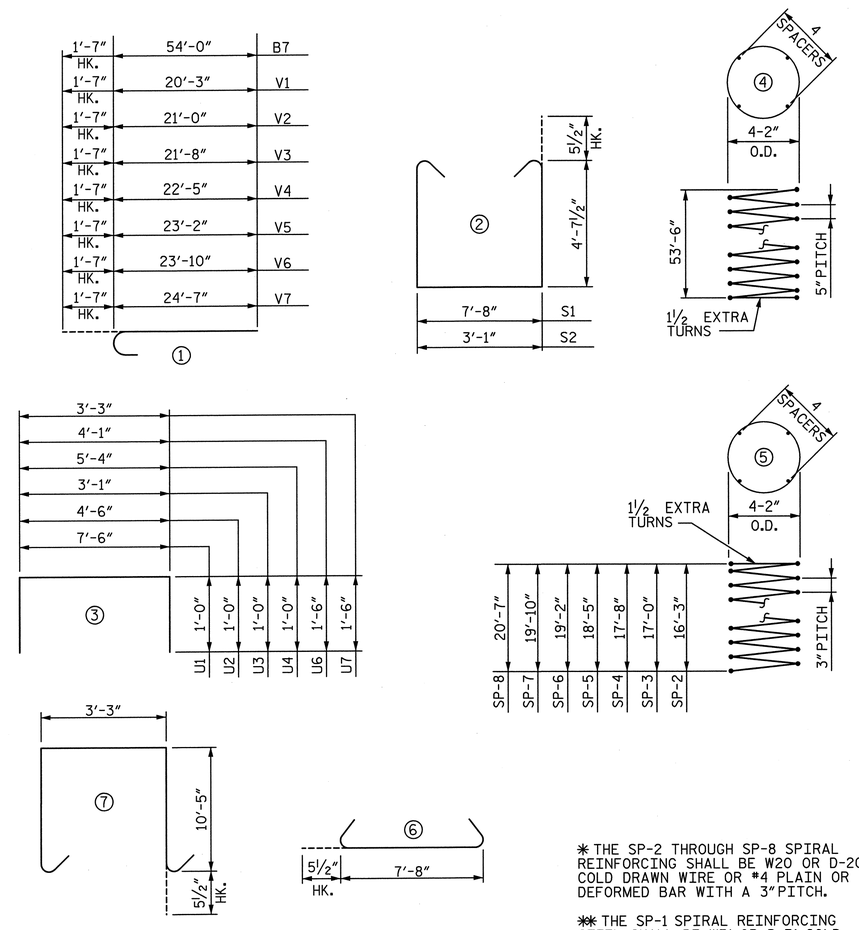

ALL BAR DIMENSIONS ARE OUT TO OUT

BILL OF MATERIAL

BAR	NO.	SIZE	TYPE	LENGTH	WEIGHT
B1	20	#11	STR.	54′-0″	5,738
B2	10	#11	STR.	28′-1″	1,492
B3	15	#11	STR.	35′-9″	2,849
B4	36	#5	STR.	54′-0″	2,028
B5	18	#5	STR.	14′-6″	272
B6	70	#4	STR.	3′-4″	156
B7	30	#11	①	55′-7″	8,859
M1	140	#11	STR.	33′-0″	24,546
M2	140	#11	STR.	43′-0″	31,984
S1	107	#5	②	17′-10″	1,990
S2	107	#5	②	13′-3″	1,479
S3	107	#5	⑥	8′-7″	958
U1	10	#4	③	9′-6″	64
U2	14	#4	③	6′-6″	62
U3	8	#4	③	5′-1″	28
U4	6	#4	③	7′-4″	30
U5	118	#5	⑦	25′-0″	3,077
U6	56	#4	③	7′-1″	265
U7	56	#4	③	6′-3″	234
V1	20	#11	①	21′-10″	2,320
V2	20	#11	①	22′-7″	2,400
V3	20	#11	①	23′-3″	2,471
V4	20	#11	①	24′-0″	2,550
V5	20	#11	①	24′-9″	2,630
V6	20	#11	①	25′-5″	2,701
V7	20	#11	①	26′-2″	2,780
SP-1	7	✱✱	④	1,682′-0″	12,280
SP-2	1	✱	⑤	864′-0″	577
SP-3	1	✱	⑤	902′-10″	603
SP-4	1	✱	⑤	937′-5″	626
SP-5	1	✱	⑤	976′-4″	652
SP-6	1	✱	⑤	1,015′-2″	678
SP-7	1	✱	⑤	1,049′-9″	701
SP-8	1	✱	⑤	1,088′-8″	727

✱ THE SP-2 THROUGH SP-8 SPIRAL REINFORCING SHALL BE W20 OR D-20 COLD DRAWN WIRE OR #4 PLAIN OR DEFORMED BAR WITH A 3″ PITCH.

✱✱ THE SP-1 SPIRAL REINFORCING STEEL SHALL BE W31 OR D-31 COLD DRAWN WIRE OR #5 PLAIN OR DEFORMED BAR WITH A 5″ PITCH.

THE CONTRACTOR'S ATTENTION IS CALLED TO THE FACT THAT THE LONGITUDINAL REINFORCEMENT FOR THE DRILLED PIERS IS DETAILED WITH 3 FEET OF EXTRA LENGTH.

SEE SPLICE DETAIL ON SHEET 2 OF 3 FOR M1 AND M2 DETAILS.

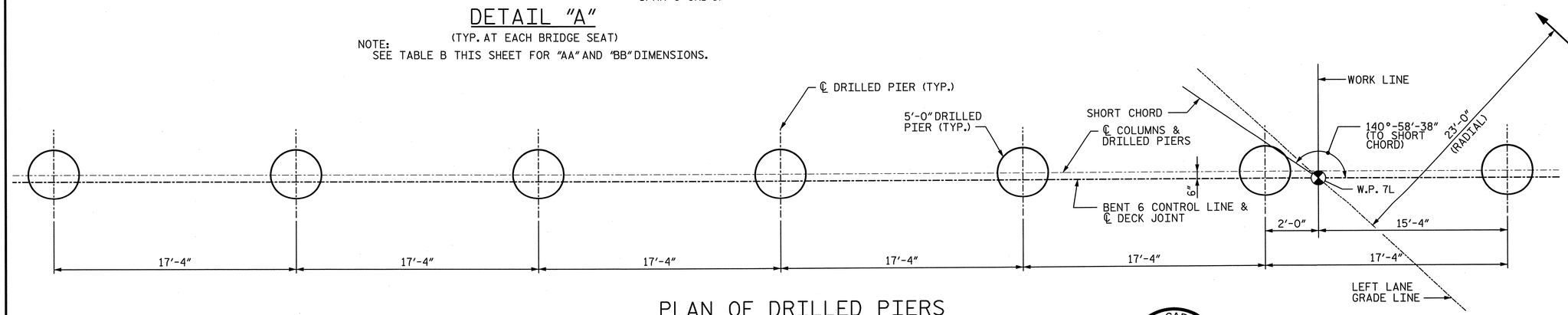

PLAN OF DRILLED PIERS

PROJECT NO. U-2524C
GUILFORD COUNTY
STATION: POT 407+73.35 -L-
= POT 29+32.06 -Y4-

SHEET 3 OF 3

STATE OF NORTH CAROLINA
DEPARTMENT OF TRANSPORTATION
RALEIGH

SUBSTRUCTURE
BENT 6
DETAILS & BILL OF MATERIAL

-LEFT LANE-

NORTH CAROLINA PROFESSIONAL SEAL 28479 ENGINEER KEVIN G. BAILEY 5-30-13

STV / Ralph Whitehead Associates, Inc.
1000 West Morehead St., Ste. 200
Charlotte, NC 28208
NC License No. F-0991

REVISIONS							
NO.	BY:	DATE:	NO.	BY:	DATE:	SHEET NO.	S-192
1			3			TOTAL SHEETS	836
2			4				

DRAWN BY : KDH	DATE : 12-12	DESIGN ENGINEER OF RECORD: K. BAILEY	DATE : 5-13
CHECKED BY : JAN	DATE : 3-13		

5/30/2013 5:01:40 PM R:\station\Finals\Bent 06 - 3 of 3.dgn

NOTES:

1. ALL REINFORCING STEEL IN THE DRILLED PIERS IS INCLUDED IN THE PAY ITEMS FOR "REINFORCING STEEL" AND "SPIRAL COLUMN REINFORCING STEEL".
2. THE LOCATION OF THE CONSTRUCTION JOINT IN THE DRILLED PIERS IS BASED ON AN APPROXIMATE GROUND LINE ELEVATION. IF THE CONSTRUCTION JOINT IS ABOVE THE ACTUAL GROUND ELEVATION, THE CONTRACTOR SHALL PLACE THE CONSTRUCTION JOINT 1 FOOT BELOW THE GROUND LINE.
3. STIRRUPS AND "U BARS" IN CAP MAY BE SHIFTED SLIGHTLY AS NECESSARY TO CLEAR ANCHOR BOLTS.
4. HOOKS ON BARS MAY BE TURNED AS NECESSARY FOR PLACING REINFORCING STEEL.
5. A CONSTRUCTION JOINT AT MID-HEIGHT OF COLUMN IS PERMITTED.
6. FOR "AB1" ANCHOR BOLTS, SEE "ELASTOMERIC BEARING DETAILS" SHEET.
7. SEE "GENERAL DRAWING GENERAL NOTES" SHEET FOR ADDITIONAL NOTES.
8. SEE SHEET 2 OF 3 FOR SECTIONS CALLED OUT ON ELEVATION VIEW.

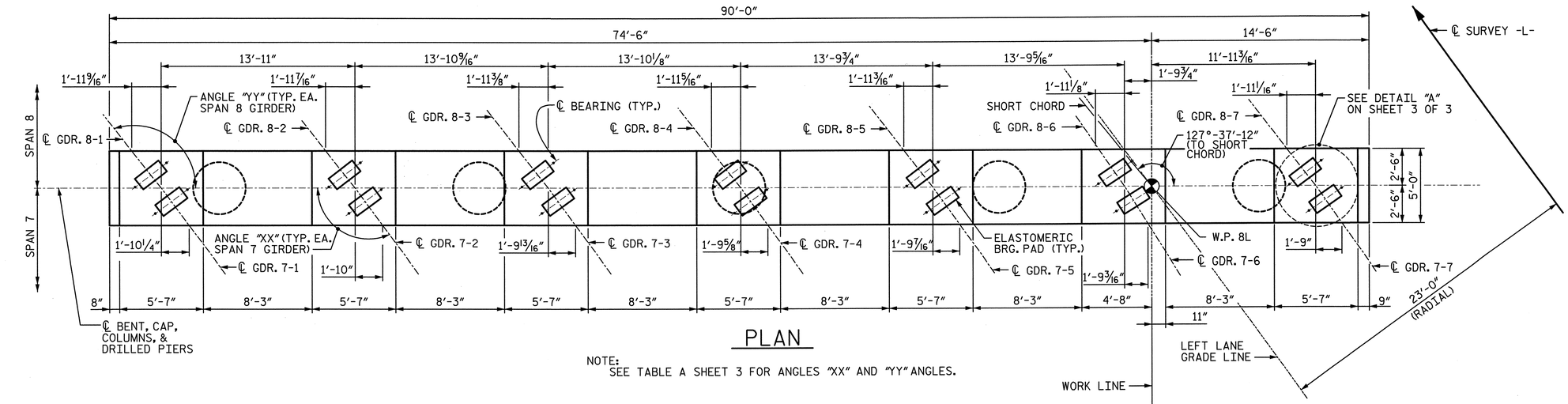

PLAN

NOTE:
SEE TABLE A SHEET 3 FOR ANGLES "XX" AND "YY" ANGLES.

NOTE:
INVERT ALTERNATE #5S1, #5S2 & #5S3 BARS.

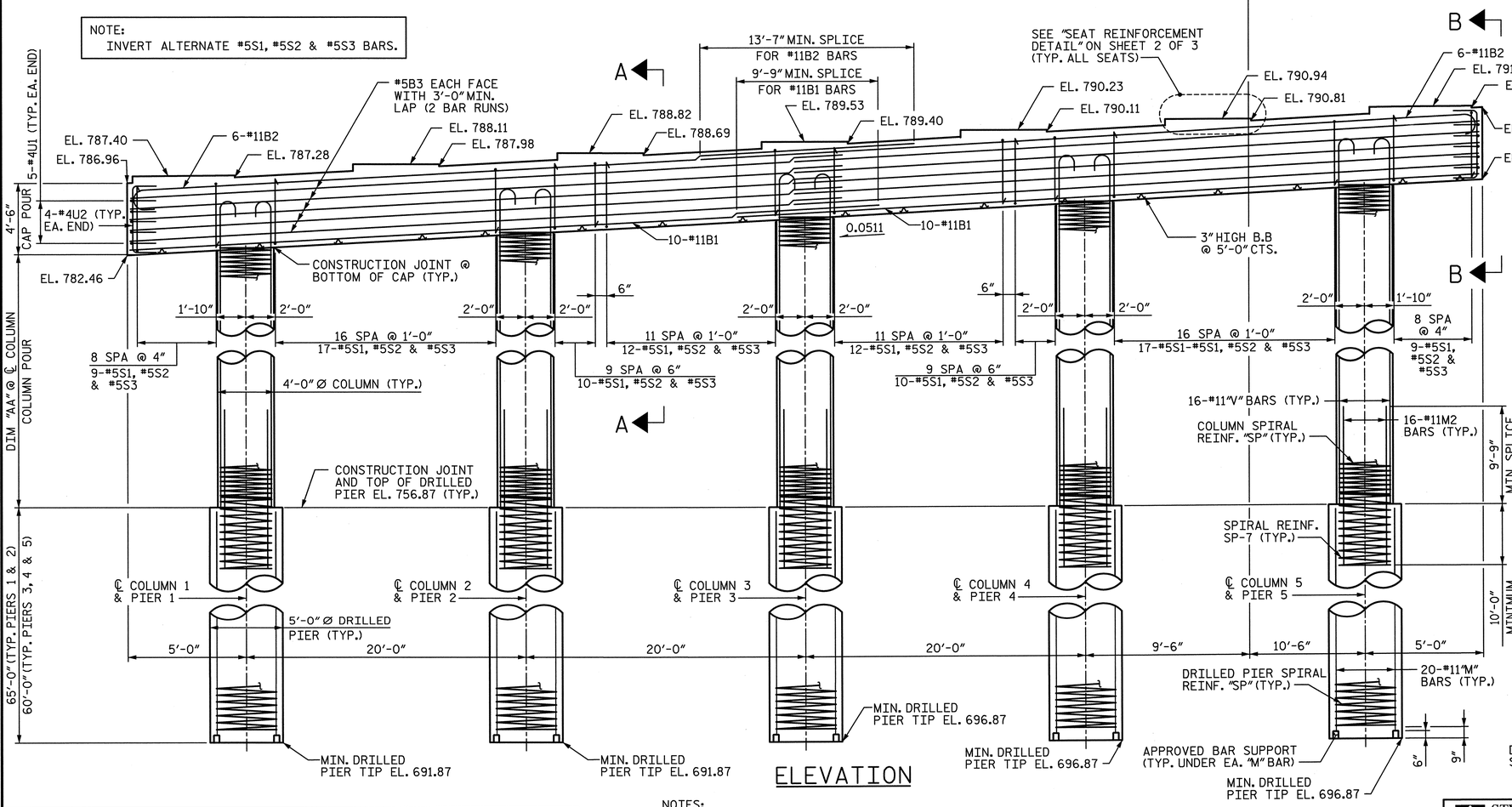

ELEVATION

NOTES:
SEE TABLE B SHEET 3 FOR "AA" DIMENSIONS.
SEE TABLE C SHEET 3 FOR COLUMN AND DRILLED PIER REINFORCING.

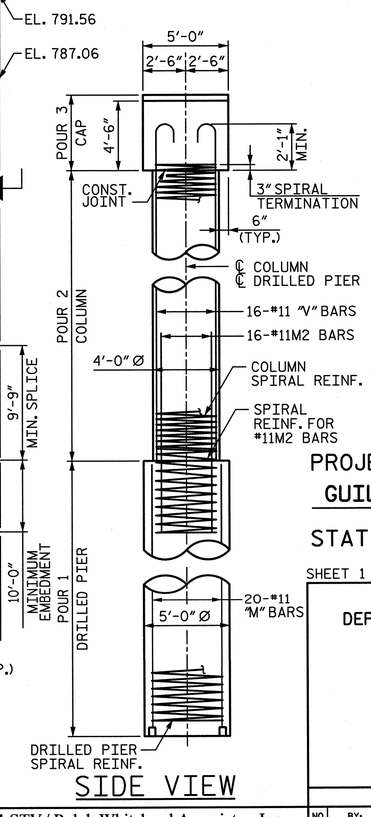

SIDE VIEW

NORTH CAROLINA PROFESSIONAL SEAL 28479 ENGINEER KEVIN G. BAILEY 6-7-13

PROJECT NO. U-2524C
GUILFORD COUNTY
STATION: POT 407+73.35 -L-
= POT 29+32.06 -Y4-

SHEET 1 OF 3

STATE OF NORTH CAROLINA
DEPARTMENT OF TRANSPORTATION
RALEIGH

SUBSTRUCTURE
BENT 7
PLAN & ELEVATION

-LEFT LANE-

REVISIONS						SHEET NO.
NO.	BY:	DATE:	NO.	BY:	DATE:	S-193
1			3			TOTAL SHEETS
2			4			836

STV / Ralph Whitehead Associates, Inc.
1000 West Morehead St., Ste. 200
Charlotte, NC 28208
NC License No. F-0991

DRAWN BY : JMP DATE : 12-12
CHECKED BY : JAN DATE : 12-12
DESIGN ENGINEER OF RECORD: K. BAILEY DATE : 5-13

6/7/2013 10:34:07 AM R:\ustation\Finals\Bent 07 - 1of 3.dgn

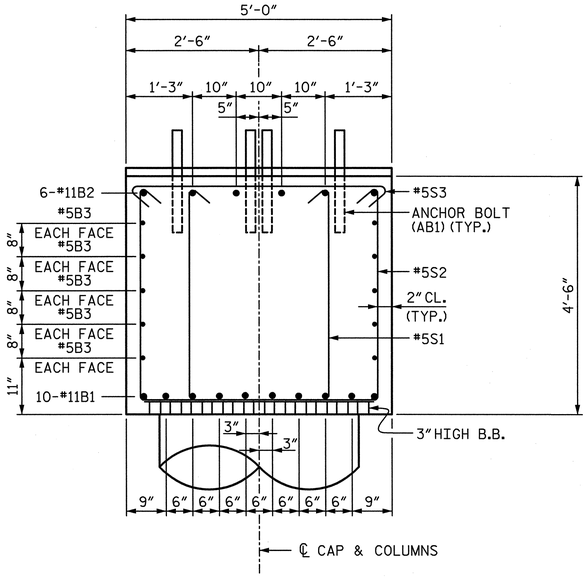

SECTION A-A

NOTE:
INVERT ALTERNATE #5S1, #5S2 & #5S3 BARS.

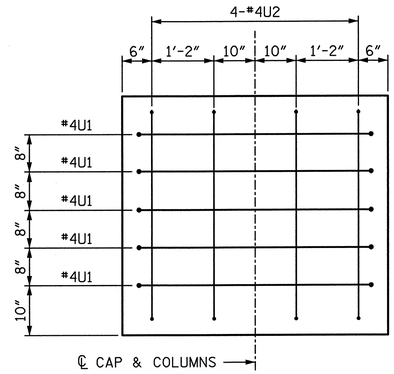

END VIEW B-B

(RIGHT END SHOWN, LEFT END SIMILAR)

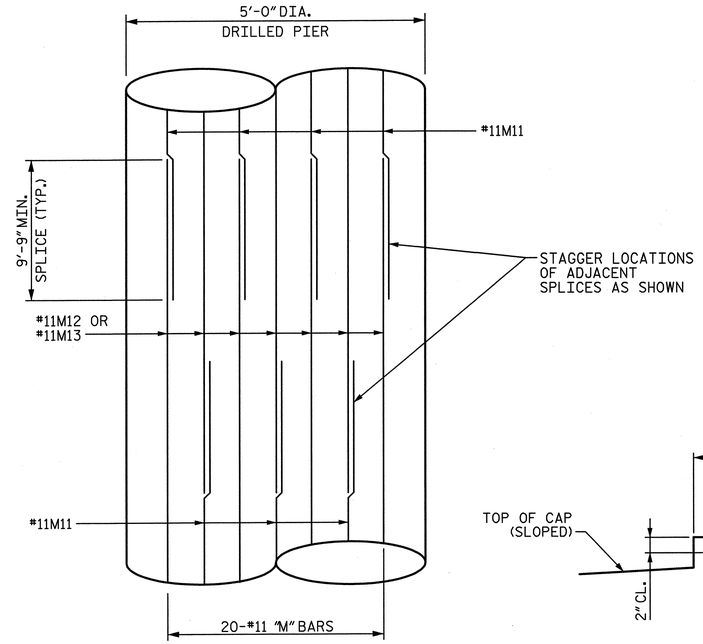

SPLICE DETAIL

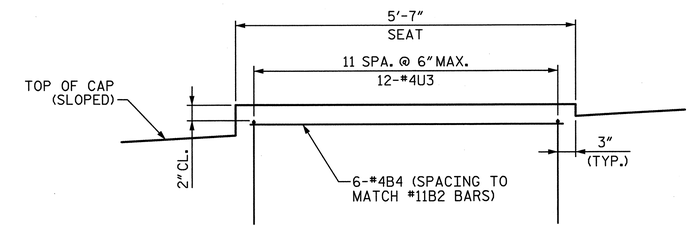

SEAT REINFORCEMENT DETAIL

(TYPICAL AT EACH BEARING SEAT)

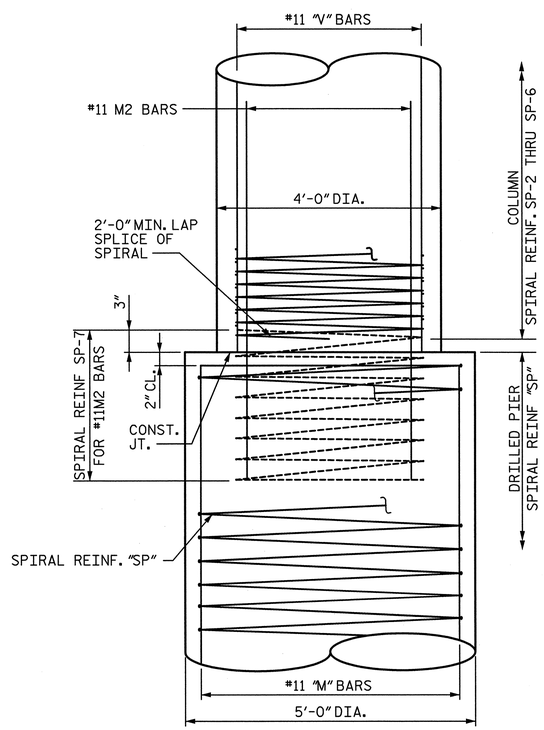

CONSTRUCTION JOINT DETAIL

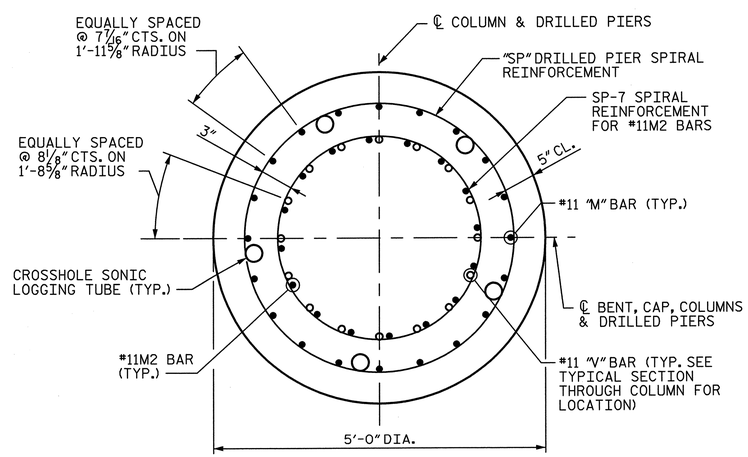

TYPICAL SECTION THROUGH DRILLED PIER

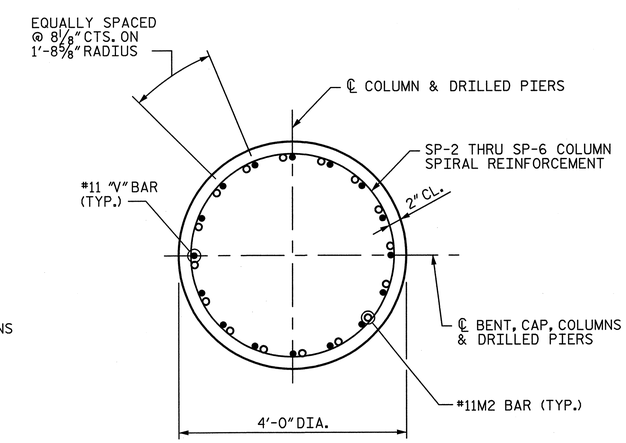

TYPICAL SECTION THROUGH COLUMN

NORTH CAROLINA PROFESSIONAL SEAL 28479 ENGINEER KEVIN G. BAILEY
5-30-13

PROJECT NO. U-2524C
GUILFORD COUNTY
STATION: POT 407+73.35 -L-
= POT 29+32.06 -Y4-

SHEET 2 OF 3

STATE OF NORTH CAROLINA
DEPARTMENT OF TRANSPORTATION
RALEIGH

SUBSTRUCTURE
BENT 7
DETAILS

-LEFT LANE-

REVISIONS								
NO.	BY:	DATE:	NO.	BY:	DATE:		SHEET NO.	
1			3				S-194	
2			4				TOTAL SHEETS	
							836	

STV / Ralph Whitehead Associates, Inc.
1000 West Morehead St., Ste. 200
Charlotte, NC 28208
NC License No. F-0991

DRAWN BY : JMP	DATE : 12-12	DESIGN ENGINEER OF RECORD: K. BAILEY	DATE : 5-13
CHECKED BY : JAN	DATE : 12-12		

5/30/2013 5:01:50 PM R:\station\Finals\Bent 07- 2 of 3.dgn

TABLE A	
PLAN VIEW ANGLES	
GDR.	ANGLE "XX"
7-1	126°-35'-38"
7-2	126°-19'-50"
7-3	126°-04'-15"
7-4	125°-48'-54"
7-5	125°-33'-46"
7-6	125°-18'-50"
7-7	125°-04'06"
	ANGLE "YY"
8-1	128°-07'-05"
8-2	128°-01'-07"
8-3	127°-55'-14"
8-4	127°-49'-24"
8-5	127°-43'-38"
8-6	127°-37'-57"
8-7	127°-32'-19"

TABLE B	
ELEVATION VIEW DIMENSIONS	
COL.	DIMENSION "AA"
1	25'-10 1/8"
2	26'-10 3/8"
3	27'-10 5/8"
4	28'-11"
5	29'-11 1/4"

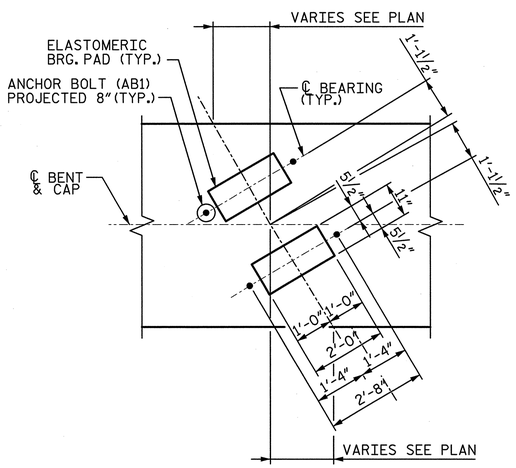

DETAIL "A"

(TYP. AT EACH BRIDGE SEAT)

TABLE C

COLUMNS & DRILLED PIERS REINFORCING BILL OF MATERIAL

COLUMN/ DRILLED PIER	BAR	NO.	SIZE	TYPE	●	LENGTH	WEIGHT	DRILLED PIER LENGTH
1	M2	16	#11	STR.		19'-9"	1,679	65'-0"
	M11	20	#11	STR.		30'-0"	3,188	
	M12	20	#11	STR.		47'-1"	5,003	
	V1	16	#11	1	29'-8"	31'-3"	2,657	
	SP-2	1	✳	5	26'-2"	1,211'-4"	809	
	SP-7	1	✳✳	4	10'-3"	298'-7"	311	
	SP-11	1	✳✳	4	64'-1"	2,028'-2"	2,115	
2	M2	16	#11	STR.		19'-9"	1,679	65'-0"
	M11	20	#11	STR.		30'-0"	3,188	
	M12	20	#11	STR.		47'-1"	5,003	
	V2	16	#11	1	30'-8"	32'-3"	2,742	
	SP-3	1	✳	5	27'-2"	1,256'-11"	840	
	SP-7	1	✳✳	4	10'-3"	298'-7"	311	
	SP-11	1	✳✳	4	64'-1"	2,028'-2"	2,115	
3	M2	16	#11	STR.		19'-9"	1,679	60'-0"
	M11	20	#11	STR.		29'-6"	3,135	
	M13	20	#11	STR.		42'-7"	4,525	
	V3	16	#11	1	31'-8"	33'-3"	2,827	
	SP-4	1	✳	5	28'-2"	1,302'-5"	870	
	SP-7	1	✳✳	4	10'-3"	298'-7"	311	
	SP-12	1	✳✳	4	59'-1"	1,873'-0"	1,954	
4	M2	16	#11	STR.		19'-9"	1,679	60'-0"
	M11	20	#11	STR.		29'-6"	3,135	
	M13	20	#11	STR.		42'-7"	4,525	
	V4	16	#11	1	32'-8"	34'-3"	2,912	
	SP-5	1	✳	5	29'-2"	1,348'-0"	900	
	SP-7	1	✳✳	4	10'-3"	298'-7"	311	
	SP-12	1	✳✳	4	59'-1"	1,873'-0"	1,954	
5	M2	16	#11	STR.		19'-9"	1,679	60'-0"
	M11	20	#11	STR.		29'-6"	3,135	
	M13	20	#11	STR.		42'-7"	4,525	
	V5	16	#11	1	33'-8"	35'-3"	2,997	
	SP-6	1	✳	5	30'-2"	1,393'-7"	931	
	SP-7	1	✳✳	4	10'-3"	298'-7"	311	
	SP-12	1	✳✳	4	59'-1"	1,873'-0"	1,954	

THE CONTRACTOR'S ATTENTION IS CALLED TO THE FACT THAT THE LONGITUDINAL REINFORCEMENT FOR THE DRILLED PIERS IS DETAILED WITH 3 FEET OF EXTRA LENGTH.

SEE SPLICE DETAIL ON SHEET 2 FOR M11 AND M12 DETAILS.

✳✳ THE SP-11 AND SP-12 SPIRAL REINFORCING STEEL SHALL BE W31 OR D-31 COLD DRAWN WIRE OR #5 PLAIN OR DEFORMED BAR WITH A 5" PITCH.

✳ THE SP-2 THROUGH SP-7 SPIRAL REINFORCING SHALL BE W20 OR D-20 COLD DRAWN WIRE OR #4 PLAIN OR DEFORMED BAR WITH A 3" PITCH.

BAR TYPES

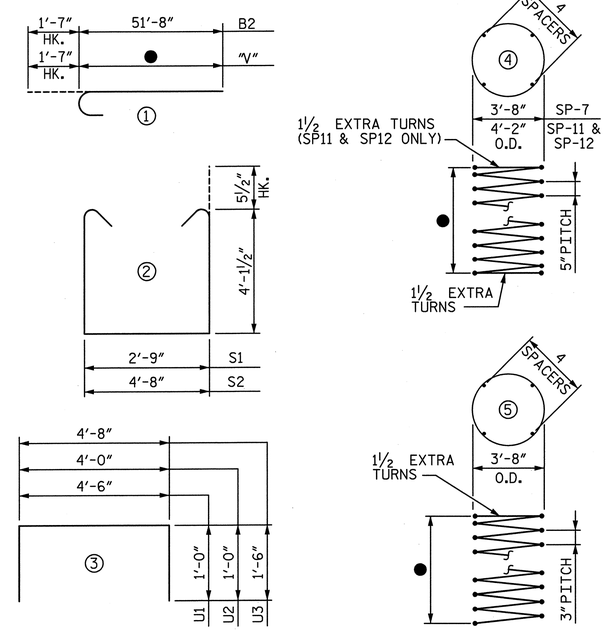

ALL BAR DIMENSIONS ARE OUT TO OUT

CAP REINFORCING BILL OF MATERIAL

BAR	NO.	SIZE	TYPE	LENGTH	WEIGHT
B1	20	#11	STR.	49'-9"	5,286
B2	12	#11	1	53'-3"	3,395
B3	20	#5	STR.	46'-4"	967
B4	42	#4	STR.	5'-3"	147
S1	96	#5	2	11'-11"	1,193
S2	96	#5	2	13'-10"	1,385
S3	96	#5	6	5'-7"	559
U1	10	#4	3	6'-6"	44
U2	8	#4	3	6'-0"	33
U3	84	#4	3	7'-8"	430

NOTE:

FOR ● AND COLUMNS & DRILLED PIERS REINFORCING BILL OF MATERIAL, SEE TABLE C THIS SHEET.

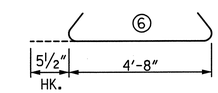

QUANTITIES

REINFORCING STEEL		LBS.	75,331
SPIRAL REINFORCING STEEL		LBS.	15,997
CLASS A CONCRETE :	POUR 2 - COLUMNS	CU. YDS.	65.0
	POUR 3 - CAP	CU. YDS.	77.0
	TOTAL	CU. YDS.	142.0
5'-0" Ø DRILLED PIERS IN SOIL		L.F.	259
5'-0" Ø DRILLED PIERS NOT IN SOIL		L.F.	51
TOTAL 5'-0" Ø DRILLED PIERS		L.F.	310
DRILLED PIER CONCRETE :	POUR 1	CU. YDS.	225.4
CSL TUBES		L.F.	1,588

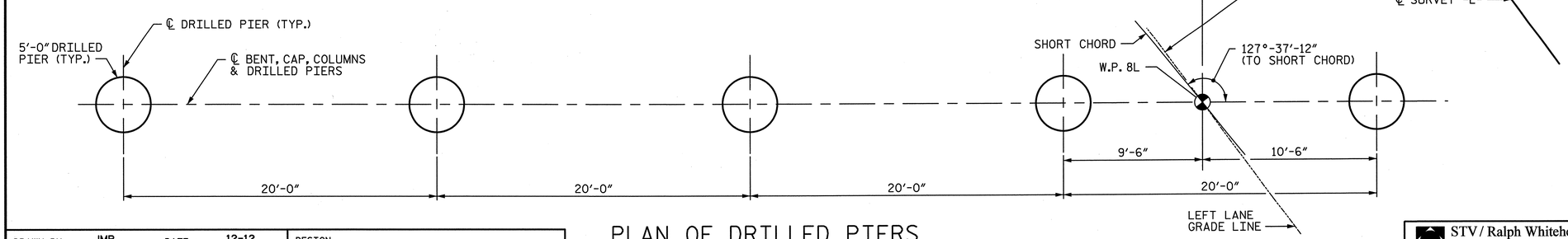

PLAN OF DRILLED PIERS

NORTH CAROLINA PROFESSIONAL SEAL 28479 ENGINEER KEVIN G. BAILEY 6-7-13

PROJECT NO. U-2524C

GUILFORD COUNTY

STATION: POT 407+73.35 -L-
= POT 29+32.06 -Y4-

SHEET 3 OF 3

STATE OF NORTH CAROLINA
DEPARTMENT OF TRANSPORTATION
RALEIGH

SUBSTRUCTURE
BENT 7
DETAILS & BILL OF MATERIAL

-LEFT LANE-

DRAWN BY : JMP	DATE : 12-12	DESIGN ENGINEER OF RECORD: K. BAILEY	DATE : 5-13
CHECKED BY : JAN	DATE : 12-12		

STV / Ralph Whitehead Associates, Inc.
1000 West Morehead St., Ste. 200
Charlotte, NC 28208
NC License No. F-0991

REVISIONS								SHEET NO.
NO.	BY:	DATE:	NO.	BY:	DATE:			S-195
1			3					TOTAL SHEETS
2			4					836

6/7/2013 11:7:05 PM R:\ustation\Finals\Bent 07- 3 of 3.dgn

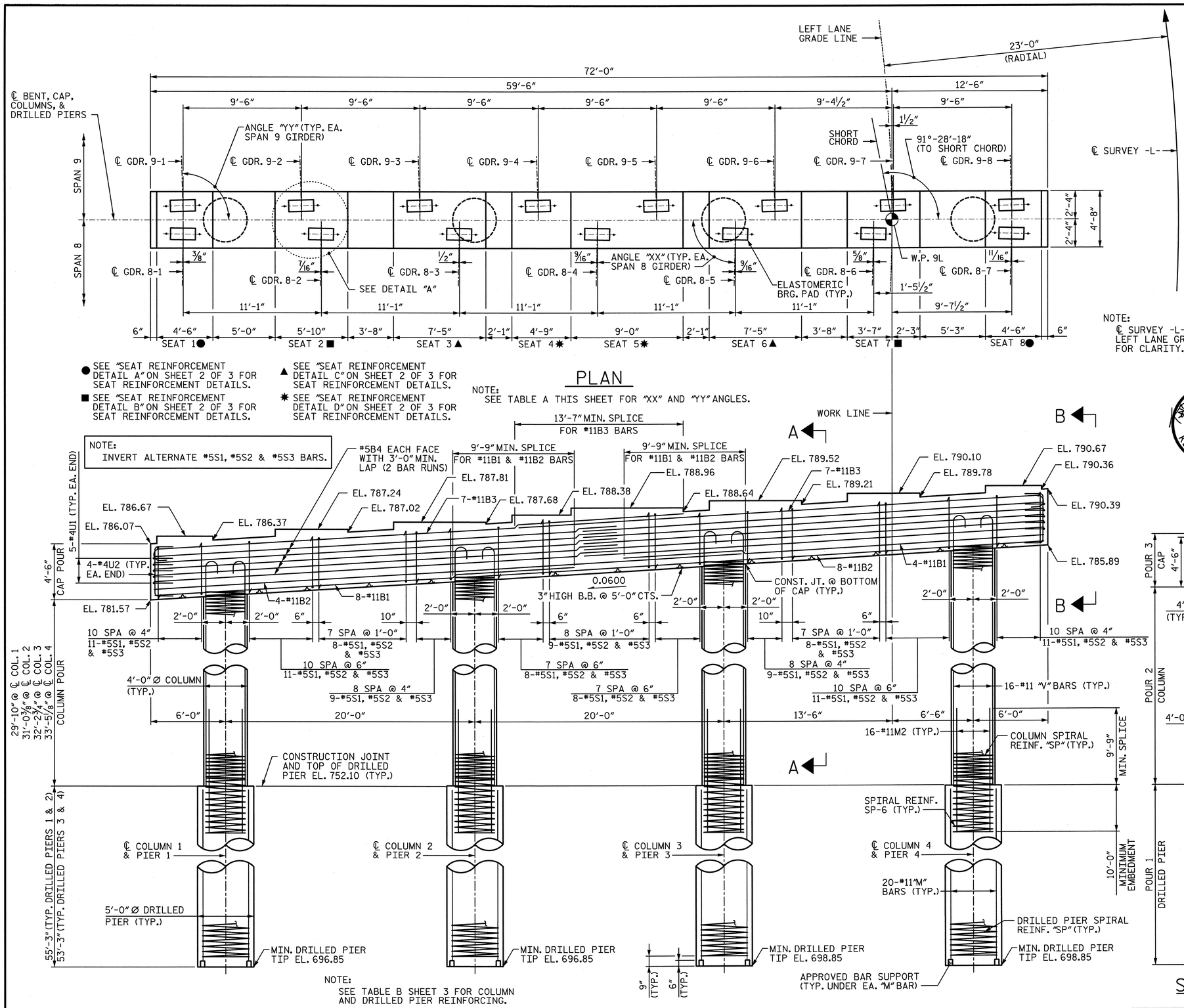

● SEE "SEAT REINFORCEMENT DETAIL A" ON SHEET 2 OF 3 FOR SEAT REINFORCEMENT DETAILS.

■ SEE "SEAT REINFORCEMENT DETAIL B" ON SHEET 2 OF 3 FOR SEAT REINFORCEMENT DETAILS.

▲ SEE "SEAT REINFORCEMENT DETAIL C" ON SHEET 2 OF 3 FOR SEAT REINFORCEMENT DETAILS.

✱ SEE "SEAT REINFORCEMENT DETAIL D" ON SHEET 2 OF 3 FOR SEAT REINFORCEMENT DETAILS.

PLAN

NOTE:
SEE TABLE A THIS SHEET FOR "XX" AND "YY" ANGLES.

NOTE:
℄ SURVEY -L-, SHORT CHORD AND LEFT LANE GRADE LINE EXAGGERATED FOR CLARITY.

TABLE A	
PLAN VIEW ANGLES	
	ANGLE "XX"
8-1	89°-11'-48"
8-2	89°-5'-50"
8-3	88°-59'-57"
8-4	88°-54'-07"
8-5	88°-48'-21"
8-6	88°-42'-40"
8-7	88°-37'-02"
	ANGLE "YY"
9-1	91°-28'-19"
9-2	91°-28'-19"
9-3	91°-28'-19"
9-4	91°-28'-19"
9-5	91°-28'-18"
9-6	91°-28'-18"
9-7	91°-28'-18"
9-8	91°-28'-17"

NOTES:

1. ALL REINFORCING STEEL IN THE DRILLED PIERS IS INCLUDED IN THE PAY ITEMS FOR "REINFORCING STEEL" AND "SPIRAL COLUMN REINFORCING STEEL".
2. THE LOCATION OF THE CONSTRUCTION JOINT IN THE DRILLED PIERS IS BASED ON AN APPROXIMATE GROUND LINE ELEVATION. IF THE CONSTRUCTION JOINT IS ABOVE THE ACTUAL GROUND ELEVATION, THE CONTRACTOR SHALL PLACE THE CONSTRUCTION JOINT 1 FOOT BELOW THE GROUND LINE.
3. STIRRUPS AND "U BARS" IN CAP MAY BE SHIFTED SLIGHTLY AS NECESSARY TO CLEAR ANCHOR BOLTS.
4. HOOKS ON BARS MAY BE TURNED AS NECESSARY FOR PLACING REINFORCING STEEL.
5. A CONSTRUCTION JOINT AT MID-HEIGHT OF COLUMN IS PERMITTED.
6. FOR "AB1" AND "AB4" ANCHOR BOLTS, SEE "ELASTOMERIC BEARING DETAILS" SHEET.
7. SEE "GENERAL DRAWING GENERAL NOTES" SHEET FOR ADDITIONAL NOTES.
8. SEE SHEET 2 OF 3 FOR SECTIONS CALLED OUT ON ELEVATION VIEW.
9. THE TOP SURFACE AREAS OF THE BENT CAPS SHALL BE CURED IN ACCORDANCE WITH THE STANDARD SPECIFICATIONS EXCEPT THE MEMBRANE CURING COMPOUND METHOD SHALL NOT BE USED.

NOTE:
SEE TABLE B SHEET 3 FOR COLUMN AND DRILLED PIER REINFORCING.

ELEVATION

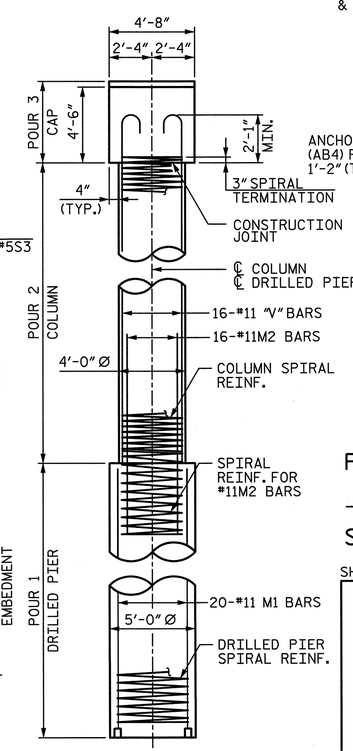

SIDE VIEW

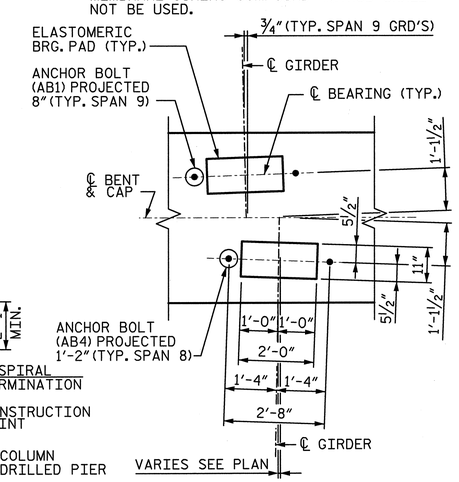

DETAIL "A"

(TYP AT EACH BRIDGE SEAT)

PROJECT NO. U-2524C

GUILFORD COUNTY

STATION: POT 407+73.35 -L-
= POT 29+32.06 -Y4-

SHEET 1 OF 3

STATE OF NORTH CAROLINA
DEPARTMENT OF TRANSPORTATION
RALEIGH

SUBSTRUCTURE
BENT 8
PLAN & ELEVATION

-LEFT LANE-

REVISIONS							SHEET NO.
NO.	BY:	DATE:	NO.	BY:	DATE:		S-196
1			3				TOTAL SHEETS
2			4				836

STV / Ralph Whitehead Associates, Inc.
1000 West Morehead St., Ste. 200
Charlotte, NC 28208
NC License No. F-0991

DRAWN BY : JMP	DATE : 11-12	DESIGN ENGINEER OF RECORD: K. BAILEY	DATE : 5-13
CHECKED BY : JAN	DATE : 12-12		

5/30/2013 5:01:59 PM R:\station\Finals\Bent 08 - 1of 3.dgn

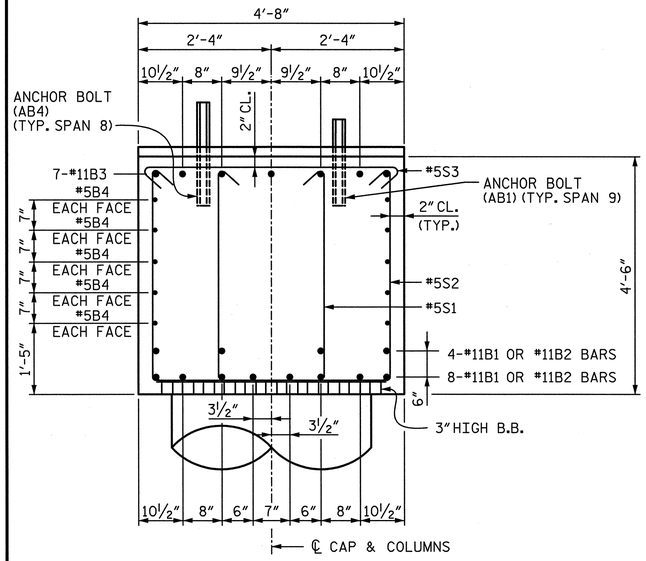

SECTION A-A

NOTE:
INVERT ALTERNATE #5S1, #5S2 & #5S3 BARS.

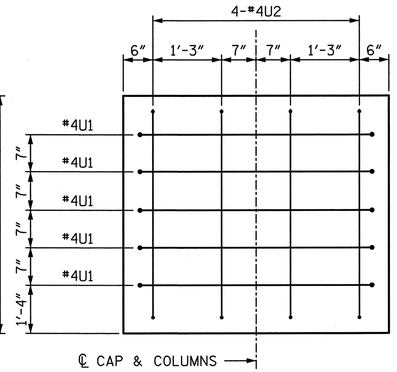

END VIEW B-B

(RIGHT END SHOWN, LEFT END SIMILAR)

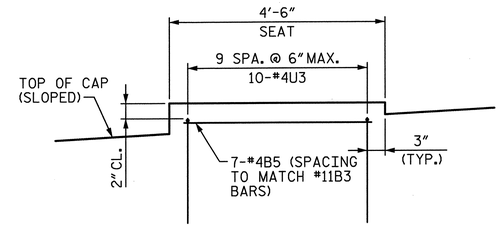

SEAT REINFORCEMENT DETAIL "A"

(FOR SEATS 1 AND 8)

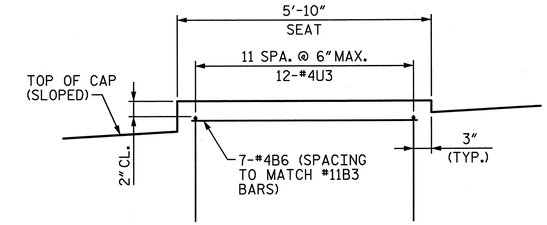

SEAT REINFORCEMENT DETAIL "B"

(FOR SEATS 2 AND 7)

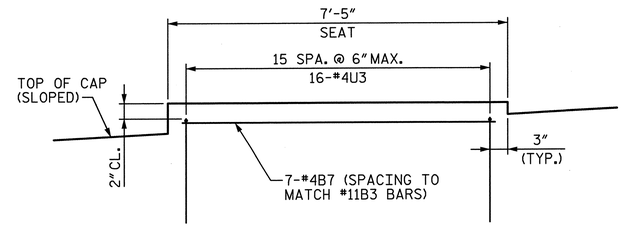

SEAT REINFORCEMENT DETAIL "C"

(FOR SEATS 3 AND 6)

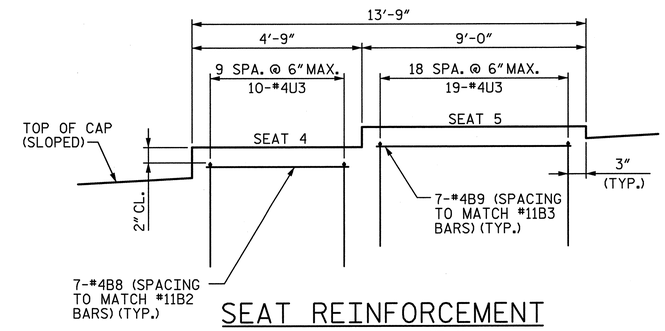

SEAT REINFORCEMENT DETAIL "D"

(FOR SEATS 4 AND 5)

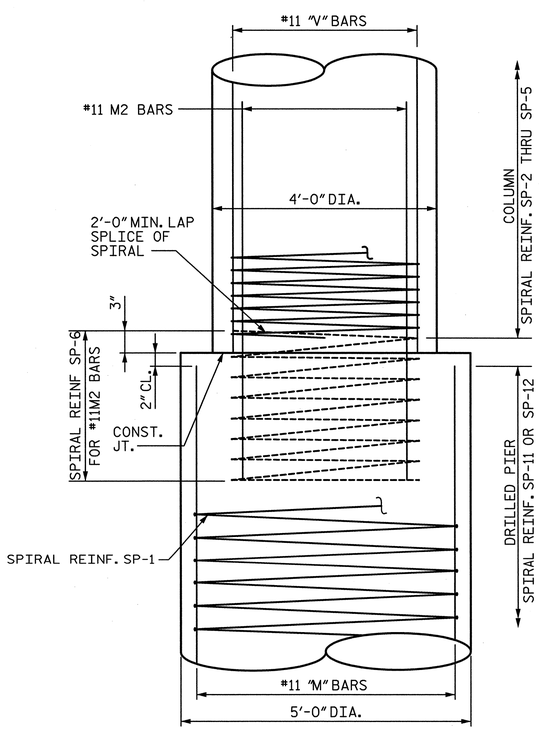

CONSTRUCTION JOINT DETAIL

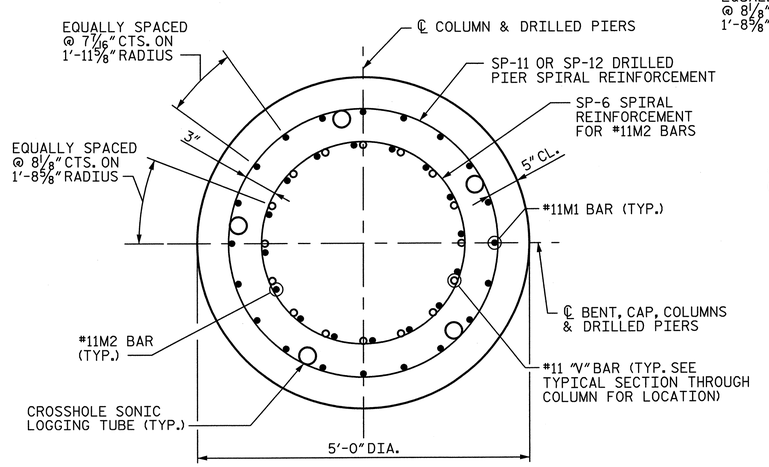

TYPICAL SECTION THROUGH DRILLED PIER

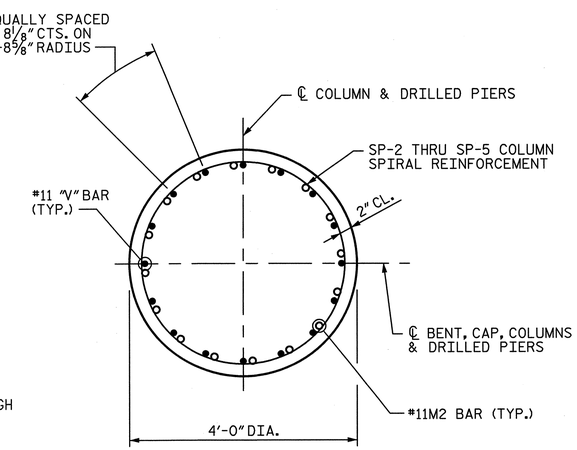

TYPICAL SECTION THROUGH COLUMN

PROJECT NO. U-2524C
GUILFORD COUNTY
STATION: POT 407+73.35 -L-
= POT 29+32.06 -Y4-

SHEET 2 OF 3

STATE OF NORTH CAROLINA
DEPARTMENT OF TRANSPORTATION
RALEIGH

SUBSTRUCTURE
BENT 8
DETAILS

-LEFT LANE-

REVISIONS						SHEET NO.
NO.	BY:	DATE:	NO.	BY:	DATE:	S-197
1			3			TOTAL SHEETS
2			4			836

STV / Ralph Whitehead Associates, Inc.
1000 West Morehead St., Ste. 200
Charlotte, NC 28208
NC License No. F-0991

DRAWN BY : JMP	DATE : 11-12	DESIGN ENGINEER OF RECORD: K. BAILEY	DATE : 5-13
CHECKED BY : JAN	DATE : 12-12		

5/30/2013 5:02:03 PM R:\ustation\Finals\Bent 08 - 2 of 3.dgn

TABLE B

COLUMNS & DRILLED PIERS REINFORCING BILL OF MATERIAL

COLUMN/ DRILLED PIER	BAR	NO.	SIZE	TYPE	●	LENGTH	WEIGHT	DRILLED PIER LENGTH
1	M2	16	#11	STR.		19'-9"	1,679	55'-3"
	M11	20	#11	STR.		54'-7"	5,800	
	V1	16	#11	1	33'-7"	35'-2"	2,989	
	SP-2	1	✳	5	30'-1"	1,389'-9"	928	
	SP-6	1	✳✳	4	10'-3"	298'-7"	311	
	SP-11	1	✳✳	4	54'-4"	1,725'-6"	1,800	
2	M2	16	#11	STR.		19'-9"	1,679	55'-3"
	M11	20	#11	STR.		54'-7"	5,800	
	V2	16	#11	1	34'-10"	36'-5"	3,096	
	SP-3	1	✳	5	31'-4"	1,446'-9"	966	
	SP-6	1	✳✳	4	10'-3"	298'-7"	311	
	SP-11	1	✳✳	4	54'-4"	1,725'-6"	1,800	
3	M2	16	#11	STR.		19'-9"	1,679	53'-3"
	M12	20	#11	STR.		52'-7"	5,588	
	V3	16	#11	1	36'-0"	37'-7"	3,195	
	SP-4	1	✳	5	32'-6"	1,499'-11"	1,002	
	SP-6	1	✳✳	4	10'-3"	298'-7"	311	
	SP-12	1	✳✳	4	52'-4"	1,663'-5"	1,735	
4	M2	16	#11	STR.		19'-9"	1,679	53'-3"
	M12	20	#11	STR.		52'-7"	5,588	
	V4	16	#11	1	37'-2"	38'-9"	3,294	
	SP-5	1	✳	5	33'-8"	1,553'-0"	1,037	
	SP-6	1	✳✳	4	10'-3"	298'-7"	311	
	SP-12	1	✳✳	4	52'-4"	1,663'-5"	1,735	

✳✳ THE SP-11, SP-12 AND SP-6 SPIRAL REINFORCING STEEL SHALL BE W31 OR D-31 COLD DRAWN WIRE OR #5 PLAIN OR DEFORMED BAR WITH A 5" PITCH.

✳ THE SP-2 THROUGH SP-5 SPIRAL REINFORCING SHALL BE W20 OR D-20 COLD DRAWN WIRE OR #4 PLAIN OR DEFORMED BAR WITH A 3" PITCH.

QUANTITIES

REINFORCING STEEL		LBS.	55,400
SPIRAL REINFORCING STEEL		LBS.	12,247
CLASS A CONCRETE :	POUR 2 - COLUMNS	CU. YDS.	58.9
	POUR 3 - CAP	CU. YDS.	59.8
	TOTAL	CU. YDS.	118.7
5'-0" Ø DRILLED PIERS IN SOIL		L.F.	187
5'-0" Ø DRILLED PIERS NOT IN SOIL		L.F.	30
TOTAL 5'-0" Ø DRILLED PIERS		L.F.	217
DRILLED PIER CONCRETE :	POUR 1	CU. YDS.	157.8
CSL TUBES		L.F.	1,115

BAR TYPES

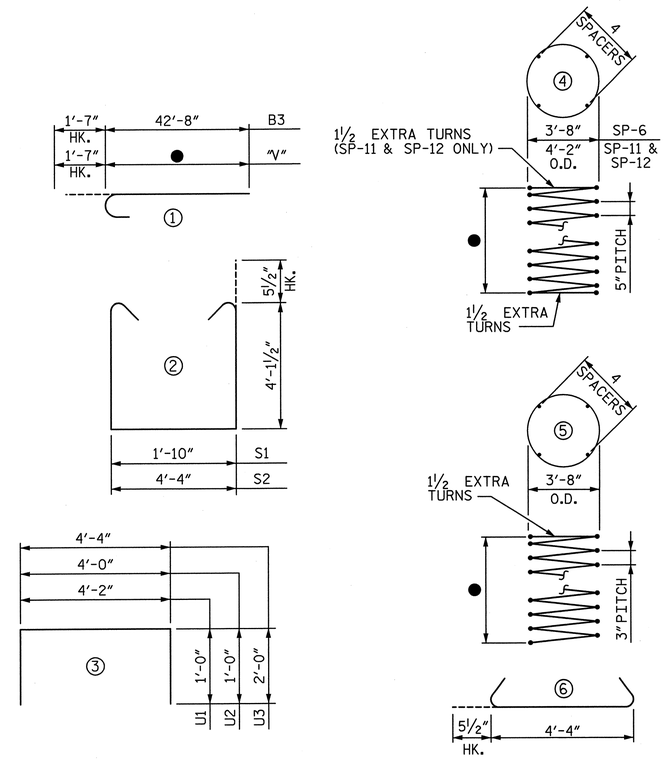

ALL BAR DIMENSIONS ARE OUT TO OUT

CAP REINFORCING BILL OF MATERIAL

BAR	NO.	SIZE	TYPE	LENGTH	WEIGHT
B1	12	#11	STR.	33'-10"	2,157
B2	12	#11	STR.	47'-7"	3,034
B3	14	#11	1	44'-3"	3,291
B4	20	#5	STR.	37'-4"	779
B5	14	#4	STR.	4'-2"	39
B6	14	#4	STR.	5'-6"	51
B7	14	#4	STR.	7'-1"	66
B8	7	#4	STR.	4'-5"	21
B9	7	#4	STR.	8'-8"	41
S1	103	#5	2	11'-0"	1,182
S2	103	#5	2	13'-6"	1,450
S3	103	#5	6	5'-3"	564
U1	10	#4	3	6'-2"	41
U2	8	#4	3	6'-0"	33
U3	105	#4	3	8'-4"	585

NOTE:

FOR ● AND COLUMNS & DRILLED PIERS REINFORCING BILL OF MATERIAL, SEE TABLE B THIS SHEET.

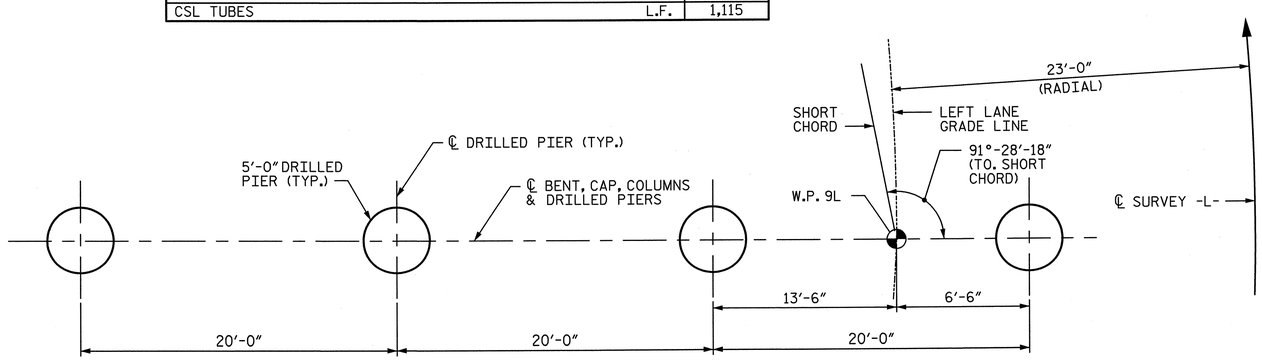

PLAN OF DRILLED PIERS

PROJECT NO. U-2524C

GUILFORD COUNTY

STATION: POT 407+73.35 -L-
= POT 29+32.06 -Y4-

SHEET 3 OF 3

STATE OF NORTH CAROLINA
DEPARTMENT OF TRANSPORTATION
RALEIGH

SUBSTRUCTURE
BENT 8
DETAILS & BILL OF MATERIAL

-LEFT LANE-

NORTH CAROLINA PROFESSIONAL SEAL 28479 ENGINEER KEVIN G. BAILEY 5-30-13

STV / Ralph Whitehead Associates, Inc.
1000 West Morehead St., Ste. 200
Charlotte, NC 28208
NC License No. F-0991

REVISIONS								SHEET NO.
NO.	BY:	DATE:	NO.	BY:	DATE:			S-198
1			3					TOTAL SHEETS
2			4					836

DRAWN BY : JMP DATE : 11-12
CHECKED BY : JAN DATE : 12-12

DESIGN ENGINEER OF RECORD: K. BAILEY DATE : 5-13

5/30/2013 5:02:08 PM R:\station\Finals\Bent 08 - 3 of 3.dgn

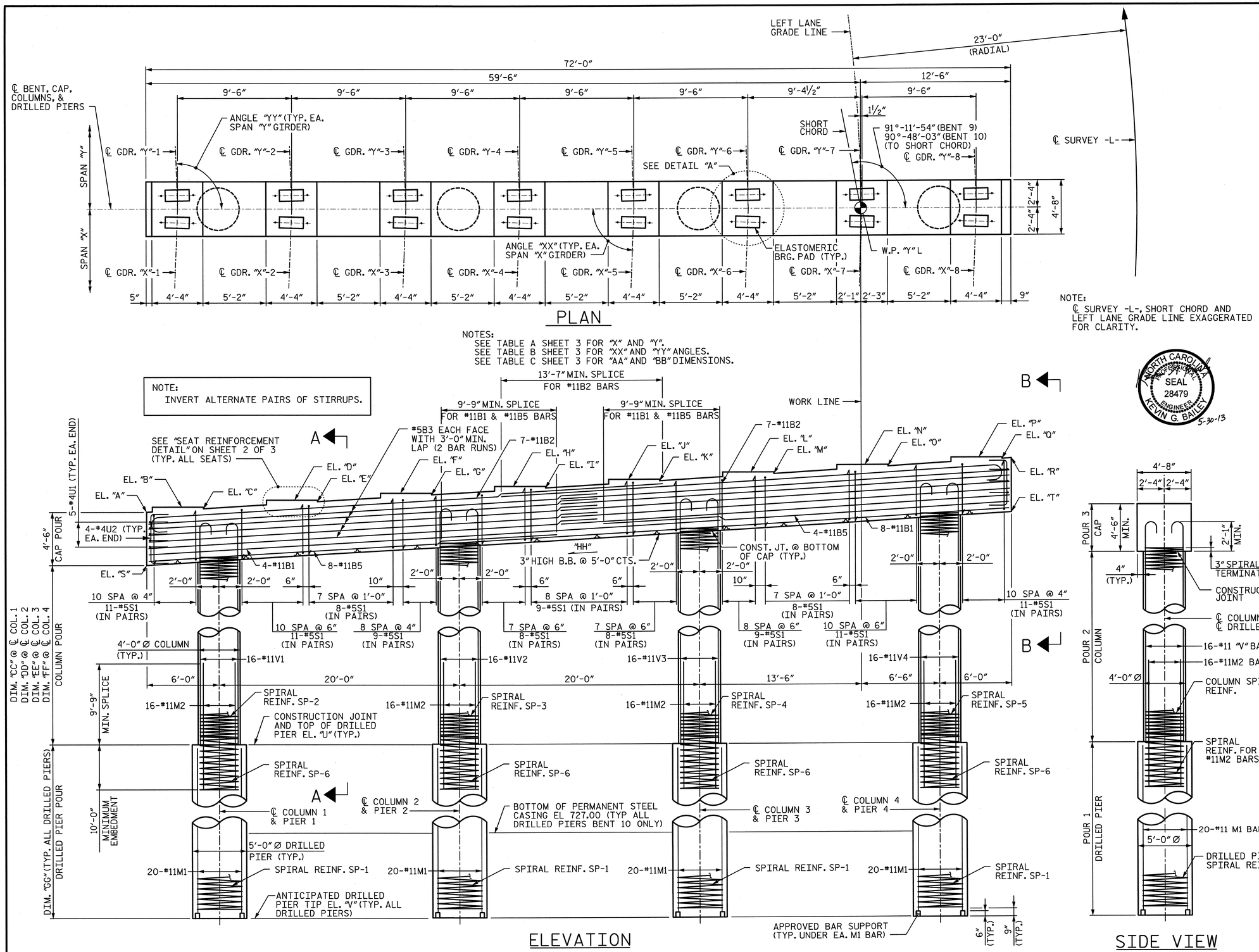

NOTES:

1. ALL REINFORCING STEEL IN THE DRILLED PIERS IS INCLUDED IN THE PAY ITEMS FOR "REINFORCING STEEL" AND "SPIRAL COLUMN REINFORCING STEEL".
2. THE LOCATION OF THE CONSTRUCTION JOINT IN THE DRILLED PIERS IS BASED ON AN APPROXIMATE GROUND LINE ELEVATION. IF THE CONSTRUCTION JOINT IS ABOVE THE ACTUAL GROUND ELEVATION, THE CONTRACTOR SHALL PLACE THE CONSTRUCTION JOINT 1 FOOT BELOW THE GROUND LINE.
3. STIRRUPS AND "U BARS" IN CAP MAY BE SHIFTED SLIGHTLY AS NECESSARY TO CLEAR ANCHOR BOLTS.
4. HOOKS ON BARS MAY BE TURNED AS NECESSARY FOR PLACING REINFORCING STEEL.
5. A CONSTRUCTION JOINT AT MID-HEIGHT OF COLUMN IS PERMITTED.
6. FOR "AB1" ANCHOR BOLTS, SEE "ELASTOMERIC BEARING DETAILS" SHEET.
7. SEE "GENERAL DRAWING GENERAL NOTES" SHEET FOR ADDITIONAL NOTES.
8. SEE SHEET 2 OF 3 FOR SECTIONS CALLED OUT ON ELEVATION VIEW.
9. FOR TABLES A THROUGH E, SEE SHEET 3 OF 3.

NORTH CAROLINA PROFESSIONAL SEAL 28479 ENGINEER KEVIN G. BAILEY 5-30-13

PROJECT NO. U-2524C

GUILFORD COUNTY

STATION: POT 407+73.35 -L-
= POT 29+32.06 -Y4-

SHEET 1 OF 3

STATE OF NORTH CAROLINA
DEPARTMENT OF TRANSPORTATION
RALEIGH

SUBSTRUCTURE BENTS 9 & 10 PLAN & ELEVATION

-LEFT LANE-

DRAWN BY : KDH	DATE : 10-12	DESIGN ENGINEER OF RECORD: K. BAILEY	DATE : 5-13
CHECKED BY : JAN	DATE : 12-12		

STV/Ralph Whitehead Associates, Inc.
1000 West Morehead St., Ste. 200
Charlotte, NC 28208
NC License No. F-0991

REVISIONS								SHEET NO.
NO.	BY:	DATE:	NO.	BY:	DATE:			S-199
1			3					TOTAL SHEETS
2			4					836

5/30/2013 5:02:12 PM R:\ustation\Finals\Bent 09-10 - 1of 3.dgn

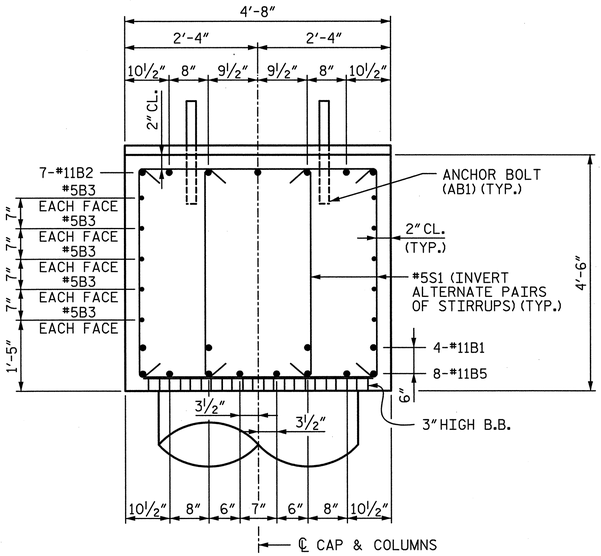

SECTION A-A

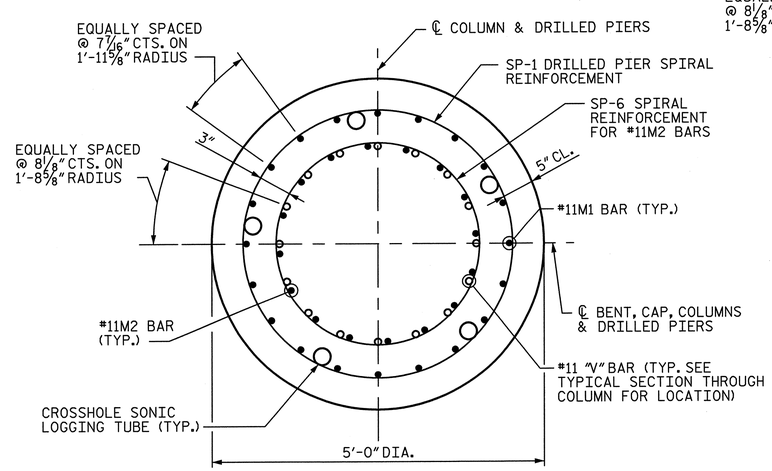

TYPICAL SECTION THROUGH DRILLED PIER

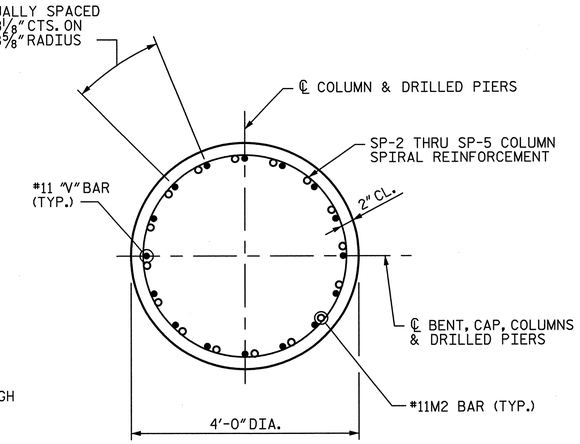

TYPICAL SECTION THROUGH COLUMN

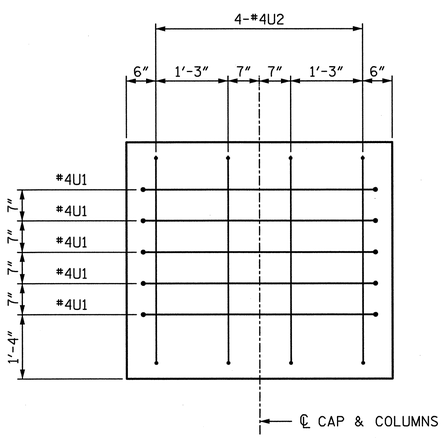

END VIEW B-B

(RIGHT END SHOWN, LEFT END SIMILAR)

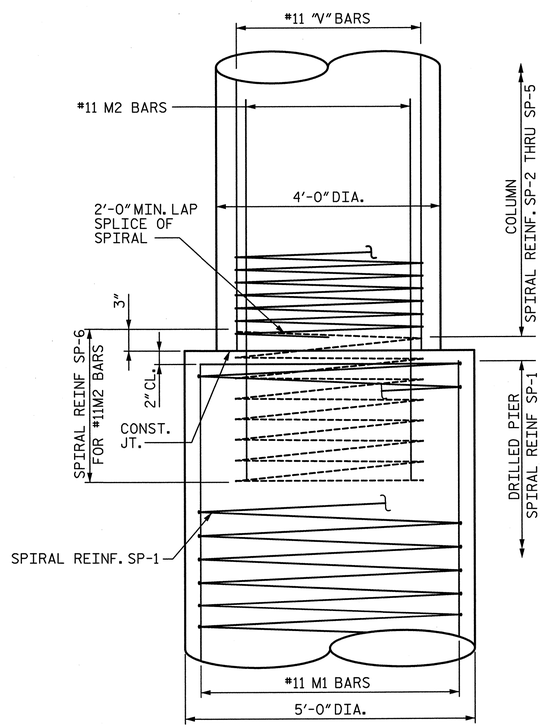

CONSTRUCTION JOINT DETAIL

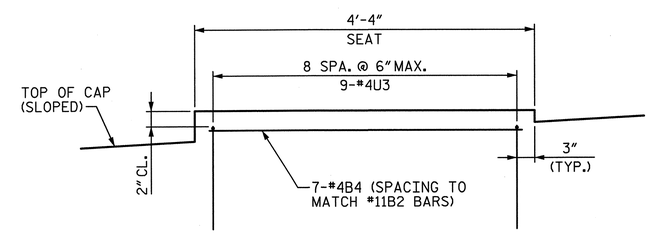

SEAT REINFORCEMENT DETAIL

(TYPICAL AT EACH BEARING SEAT)

PROJECT NO. U-2524C

GUILFORD COUNTY

STATION: POT 407+73.35 -L-

= POT 29+32.06 -Y4-

SHEET 2 OF 3

STATE OF NORTH CAROLINA
DEPARTMENT OF TRANSPORTATION
RALEIGH

SUBSTRUCTURE BENTS 9 & 10 DETAILS

-LEFT LANE-

NORTH CAROLINA PROFESSIONAL SEAL 28479 ENGINEER KEVIN G. BAILEY 5-30-13

DRAWN BY : KDH	DATE : 10-12	DESIGN ENGINEER OF RECORD: K. BAILEY	DATE : 5-13
CHECKED BY : JAN	DATE : 12-12		

STV / Ralph Whitehead Associates, Inc.
1000 West Morehead St., Ste. 200
Charlotte, NC 28208
NC License No. F-0991

REVISIONS

NO.	BY:	DATE:	NO.	BY:	DATE:
1			3		
2			4		

SHEET NO. S-200

TOTAL SHEETS 256

5/30/2013 5:02:16 PM R:\ustation\Finals\Bent 09-10 - 2 of 3.dgn

TABLE A		
PLAN VIEW INFORMATION		
	BENT 9	BENT 10
"X"	9	10
"Y"	10	11

TABLE B		
PLAN VIEW ANGLES		
	ANGLE "XX"	
GDR.	BENT 9	BENT 10
"X"-1	88°-34′-16″	88°-56′-11″
"X"-2	88°-34′-16″	88°-56′-11″
"X"-3	88°-34′-15″	88°-56′-10″
"X"-4	88°-34′-15″	88°-56′-09″
"X"-5	88°-34′-15″	88°-56′-08″
"X"-6	88°-34′-14″	88°-56′-08″
"X"-7	88°-34′-14″	88°-56′-07″
"X"-8	88°-34′-14″	88°-56′-06″
	ANGLE "YY"	
GDR.	BENT 9	BENT 10
"Y"-1	91°-12′-00″	90°-48′-07″
"Y"-2	91°-11′-59″	91°-48′-06″
"Y"-3	91°-11′-58″	91°-48′-06″
"Y"-4	91°-11′-57″	91°-48′-05″
"Y"-5	91°-11′-57″	91°-48′-05″
"Y"-6	91°-11′-56″	91°-48′-04″
"Y"-7	91°-11′-55″	91°-48′-04″
"Y"-8	91°-11′-55″	91°-48′-03″

TABLE C		
PLAN VIEW DIMENSIONS		
	BENT 9	BENT 10
"AA"	11/16″	1/2″
"BB"	9/16″	3/8″

TABLE D		
ELEVATIONS		
	BENT 9	BENT 10
"A"	785.61	785.56
"B"	786.02	785.92
"C"	785.90	785.80
"D"	786.59	786.40
"E"	786.47	786.28
"F"	787.16	786.89
"G"	787.04	786.76
"H"	787.74	787.37
"I"	787.62	787.24
"J"	788.31	787.85
"K"	788.19	787.72
"L"	788.88	788.33
"M"	788.76	788.20
"N"	789.45	788.81
"O"	789.33	788.68
"P"	790.02	789.28
"Q"	789.90	789.16
"R"	789.94	789.20
"S"	781.11	781.06
"T"	785.44	784.70
"U"	749.75	749.30
"V"	706.00	704.80

TABLE E		
ELEVATION VIEW DIMENSIONS		
	BENT 9	BENT 10
"CC"	31′-8 5/8″	32′-0 3/4″
"DD"	32′-11 1/8″	33′-0 7/8″
"EE"	34′-1 1/2″	34′-1″
"FF"	35′-4″	35′-1 1/8″
"GG"	43′-9″	44′-6″
"HH"	0.0601	0.0506

BAR TYPES

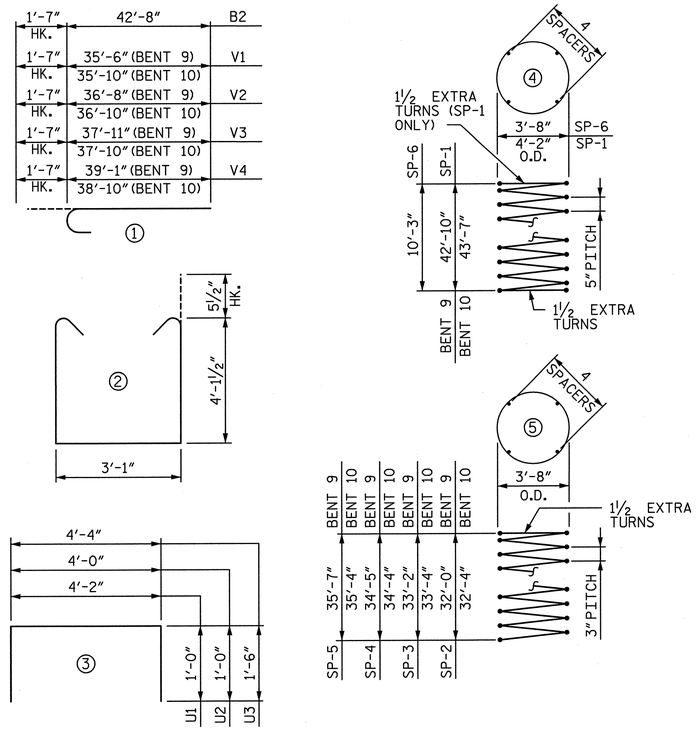

ALL BAR DIMENSIONS ARE OUT TO OUT

BILL OF MATERIAL FOR BENT 9						BILL OF MATERIAL FOR BENT 10					
BAR	NO.	SIZE	TYPE	LENGTH	WEIGHT	BAR	NO.	SIZE	TYPE	LENGTH	WEIGHT
B1	12	#11	STR.	47′-10″	3,050	B1	12	#11	STR.	47′-10″	3,050
B2	14	#11	1	44′-3″	3,291	B2	14	#11	1	44′-3″	3,291
B3	20	#5	STR.	37′-4″	779	B3	20	#5	STR.	37′-4″	779
B4	42	#4	STR.	4′-0″	112	B4	42	#4	STR.	4′-0″	112
B5	12	#11	STR.	33′-7″	2,141	B5	12	#11	STR.	33′-7″	2,141
M1	80	#11	STR.	43′-1″	18,312	M1	80	#11	STR.	43′-10″	18,631
M2	64	#11	STR.	19′-9″	6,716	M2	64	#11	STR.	19′-9″	6,716
S1	206	#5	2	12′-3″	2,632	S1	206	#5	2	12′-3″	2,632
U1	10	#4	3	6′-2″	42	U1	10	#4	3	6′-2″	42
U2	8	#4	3	6′-0″	33	U2	8	#4	3	6′-0″	33
U3	54	#4	3	7′-4″	265	U3	54	#4	3	7′-4″	265
V1	16	#11	1	37′-1″	3,152	V1	16	#11	1	37′-5″	3,181
V2	16	#11	1	38′-3″	3,252	V2	16	#11	1	38′-5″	3,266
V3	16	#11	1	39′-6″	3,358	V3	16	#11	1	39′-5″	3,351
V4	16	#11	1	40′-8″	3,457	V4	16	#11	1	40′-5″	3,436
SP-1	4	✱✱	4	1,368′-6″	5,709	SP-1	4	✱✱	4	1,391′-10″	5,807
SP-2	1	✱	5	1,477′-2″	987	SP-2	1	✱	5	1,492′-4″	997
SP-3	1	✱	5	1,530′-4″	1,022	SP-3	1	✱	5	1,537′-11″	1,027
SP-4	1	✱	5	1,587′-3″	1,060	SP-4	1	✱	5	1,583′-6″	1,058
SP-5	1	✱	5	1,640′-5″	1,096	SP-5	1	✱	5	1,629′-1″	1,088
SP-6	4	✱✱	4	298′-7″	1,246	SP-6	4	✱✱	4	298′-7″	1,246

✱✱ THE SP-1 AND SP-6 SPIRAL REINFORCING STEEL SHALL BE W31 OR D-31 COLD DRAWN WIRE OR #5 PLAIN OR DEFORMED BAR WITH A 5″PITCH.

✱ THE SP-2 THROUGH SP-5 SPIRAL REINFORCING SHALL BE W20 OR D-20 COLD DRAWN WIRE OR #4 PLAIN OR DEFORMED BAR WITH A 3″PITCH.

QUANTITIES			
		BENT 9	BENT 10
REINFORCING STEEL	LBS.	50,592	50,926
SPIRAL REINFORCING STEEL	LBS.	11,120	11,223
CLASS A CONCRETE : POUR 2 - COLUMNS	CU. YDS.	62.4	62.5
POUR 3 - CAP	CU. YDS.	57.6	57.5
TOTAL	CU. YDS.	120.0	120.0
5′-0″Ø DRILLED PIERS IN SOIL	L.F.	144	146
5′-0″Ø DRILLED PIERS NOT IN SOIL	L.F.	31	32
TOTAL 5′-0″Ø DRILLED PIERS	L.F.	175	178
PERMANENT STEEL CASING FOR 5′-0″Ø DRILLED PIERS	L.F.	0	94
DRILLED PIER CONCRETE : POUR 1	CU. YDS.	127.3	129.4
CSL TUBES	L.F.	905	920

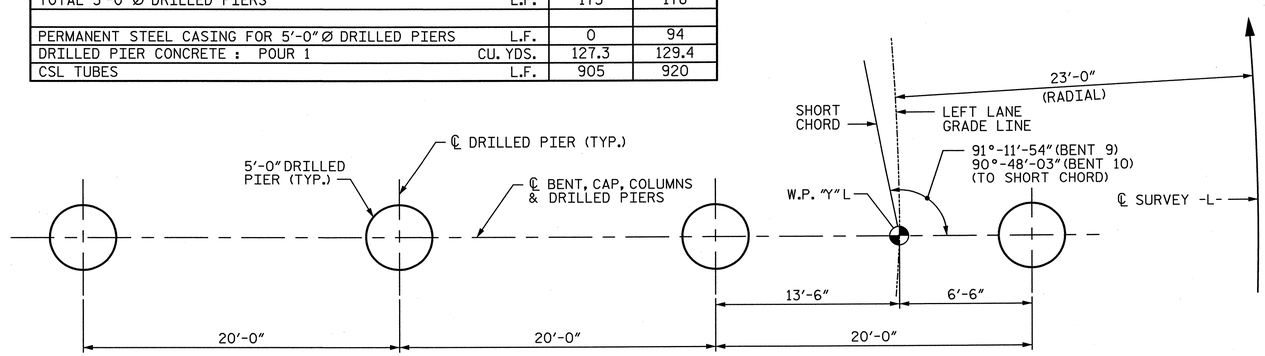

PLAN OF DRILLED PIERS

NOTE:
SEE TABLE A THIS SHEET FOR "Y".

NORTH CAROLINA PROFESSIONAL SEAL 28479 ENGINEER KEVIN G. BAILEY 5-30-13

PROJECT NO. U-2524C
GUILFORD COUNTY
STATION: POT 407+73.35 -L-
= POT 29+32.06 -Y4-
SHEET 3 OF 3

STATE OF NORTH CAROLINA
DEPARTMENT OF TRANSPORTATION
RALEIGH

SUBSTRUCTURE
BENTS 9 & 10
DETAILS & BILL OF MATERIAL

-LEFT LANE-

REVISIONS						SHEET NO.
NO.	BY:	DATE:	NO.	BY:	DATE:	S-201
1			3			TOTAL SHEETS
2			4			83

STV / Ralph Whitehead Associates, Inc.
1000 West Morehead St., Ste. 200
Charlotte, NC 28208
NC License No. F-0991

DRAWN BY : KDH DATE : 10-12
CHECKED BY : JAN DATE : 12-12
DESIGN ENGINEER OF RECORD: K. BAILEY DATE : 5-13

R:\station\Finals\Bent 09-10 - 3 of 3.dgn 5:02:21 PM 5/30/2013

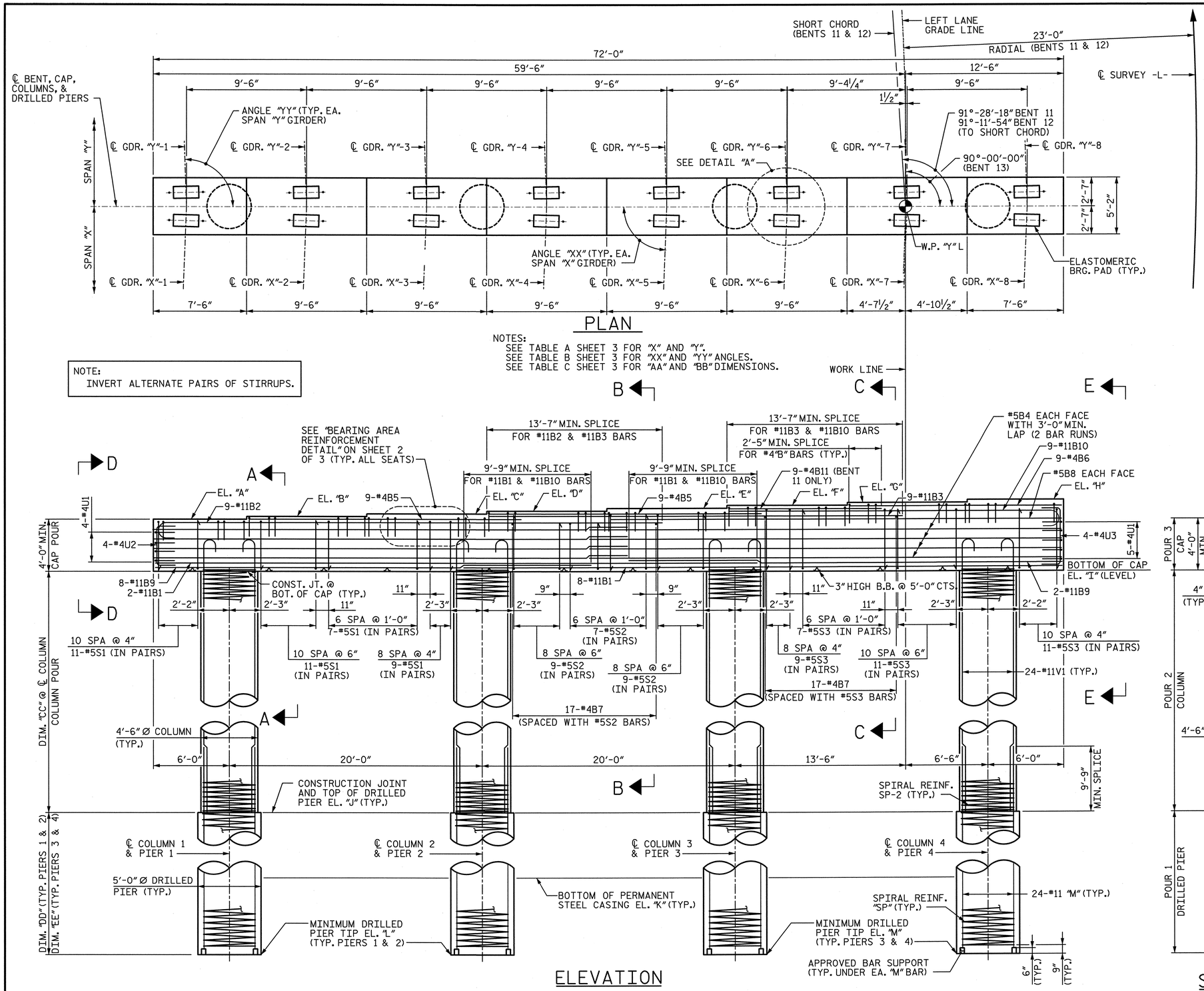

PLAN

NOTES:
SEE TABLE A SHEET 3 FOR "X" AND "Y".
SEE TABLE B SHEET 3 FOR "XX" AND "YY" ANGLES.
SEE TABLE C SHEET 3 FOR "AA" AND "BB" DIMENSIONS.

NOTE:
INVERT ALTERNATE PAIRS OF STIRRUPS.

ELEVATION

NOTES:
SEE TABLE D SHEET 3 FOR "A" THRU "M" ELEVATIONS.
SEE TABLE E SHEET 3 FOR "CC", "DD" AND "EE" DIMENSIONS.
SEE TABLE G SHEET 3 FOR COLUMN AND SHAFT REINFORCEMENT.

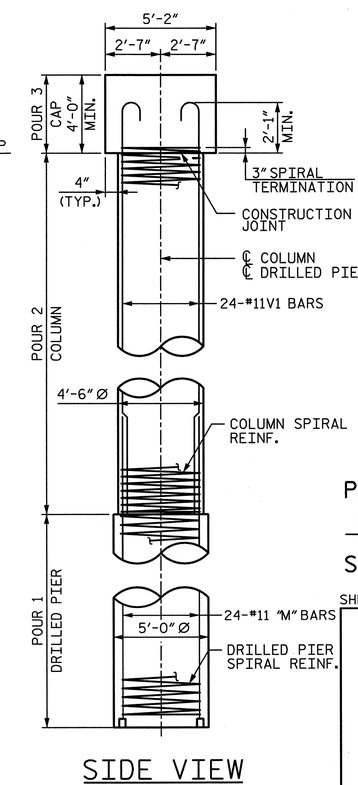

SIDE VIEW

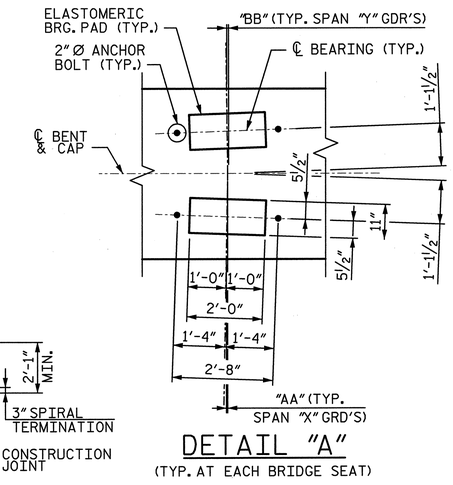

DETAIL "A"

(TYP. AT EACH BRIDGE SEAT)

NOTES:
SEE TABLE C SHEET 3 FOR "AA" AND "BB" DIMENSIONS.
SEE TABLE F SHEET 3 FOR ANCHOR BOLT DESIGNATIONS AND PROJECTIONS.

NORTH CAROLINA PROFESSIONAL SEAL 28479 ENGINEER KEVIN G. BAILEY 5-30-13

NOTES:

1. ALL REINFORCING STEEL IN THE DRILLED PIERS IS INCLUDED IN THE PAY ITEMS FOR "REINFORCING STEEL" AND "SPIRAL COLUMN REINFORCING STEEL".
2. THE LOCATION OF THE CONSTRUCTION JOINT IN THE DRILLED PIERS IS BASED ON AN APPROXIMATE GROUND LINE ELEVATION. IF THE CONSTRUCTION JOINT IS ABOVE THE ACTUAL GROUND ELEVATION, THE CONTRACTOR SHALL PLACE THE CONSTRUCTION JOINT 1 FOOT BELOW THE GROUND LINE.
3. STIRRUPS AND "U BARS" IN CAP MAY BE SHIFTED SLIGHTLY AS NECESSARY TO CLEAR ANCHOR BOLTS.
4. HOOKS ON BARS MAY BE TURNED AS NECESSARY FOR PLACING REINFORCING STEEL.
5. A CONSTRUCTION JOINT AT MID-HEIGHT OF COLUMN IS PERMITTED.
6. FOR "AB1", "AB6" AND "AB9" ANCHOR BOLTS, SEE "ELASTOMERIC BEARING DETAILS" SHEET.
7. SEE "GENERAL DRAWING GENERAL NOTES" SHEET FOR ADDITIONAL NOTES.
8. SEE SHEET 2 OF 3 FOR SECTIONS CALLED OUT ON ELEVATION VIEW.
9. FOR TABLES A THROUGH G, SEE SHEET 3 OF 3.
10. THE TOP SURFACE AREAS OF THE BENT 11 CAP SHALL BE CURED IN ACCORDANCE WITH THE STANDARD SPECIFICATIONS EXCEPT THE MEMBRANE CURING COMPOUND METHOD SHALL NOT BE USED.

PROJECT NO. U-2524C
GUILFORD COUNTY
STATION: POT 407+73.35 -L-
= POT 29+32.06 -Y4-

SHEET 1 OF 3

STATE OF NORTH CAROLINA
DEPARTMENT OF TRANSPORTATION
RALEIGH

SUBSTRUCTURE
BENTS 11 - 13
PLAN & ELEVATION

-LEFT LANE-

REVISIONS							SHEET NO.
NO.	BY:	DATE:	NO.	BY:	DATE:		S-202
1			3				TOTAL SHEETS
2			4				83

STV / Ralph Whitehead Associates, Inc.
1000 West Morehead St., Ste. 200
Charlotte, NC 28208
NC License No. F-0991

DRAWN BY : KDH	DATE : 10-12	DESIGN ENGINEER OF RECORD: K. BAILEY	DATE : 5-13
CHECKED BY : JAN	DATE : 12-12		

5/30/2013 5:02:26 PM R:\ustation\Finals\Bent 11-13 - 1of 3.dgn

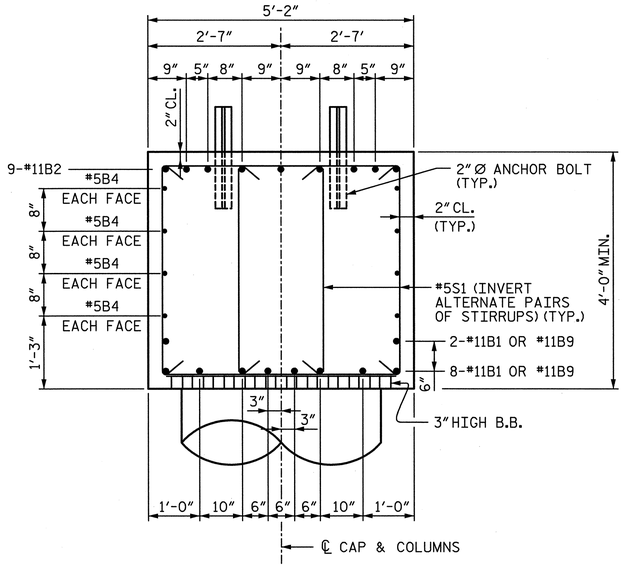

SECTION A-A

SEE TABLE F ON SHEET 3 OF 3 FOR ANCHOR BOLT DESIGNATIONS AND PROJECTIONS.

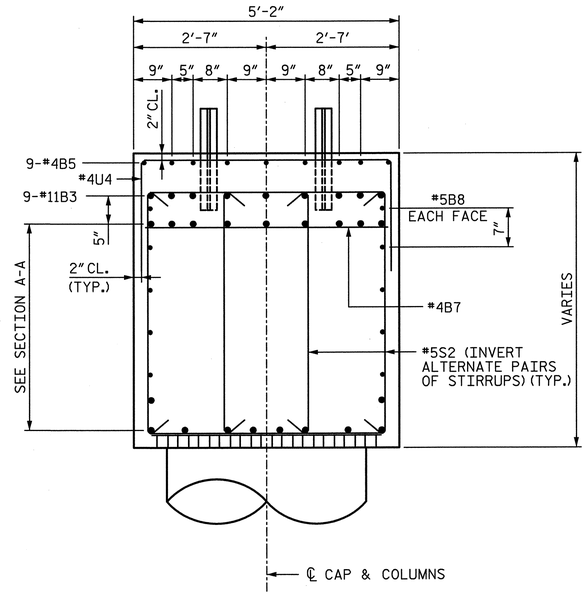

SECTION B-B

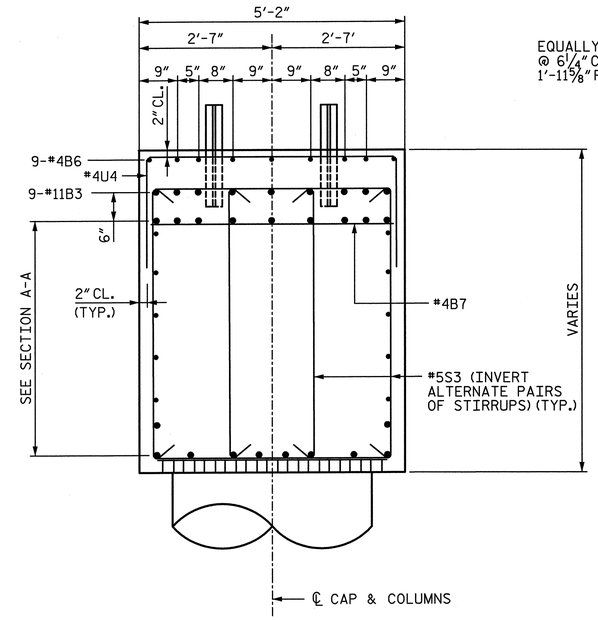

SECTION C-C

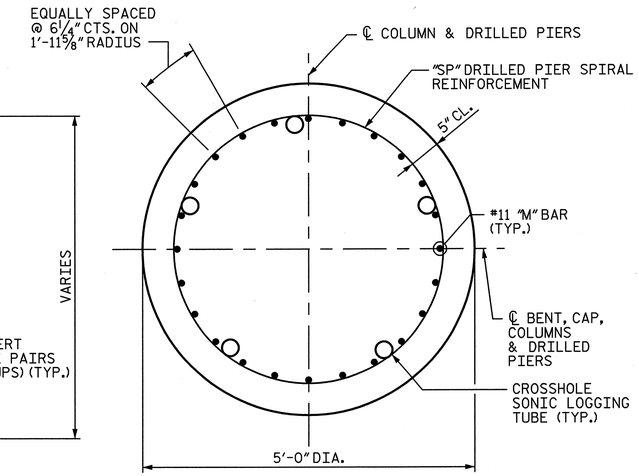

TYPICAL SECTION THROUGH DRILLED PIER

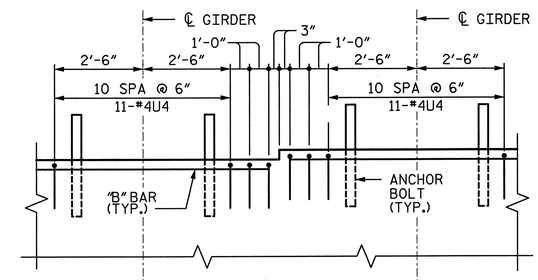

BEARING AREA REINFORCEMENT DETAIL

(TYP AT EACH BRIDGE SEAT)

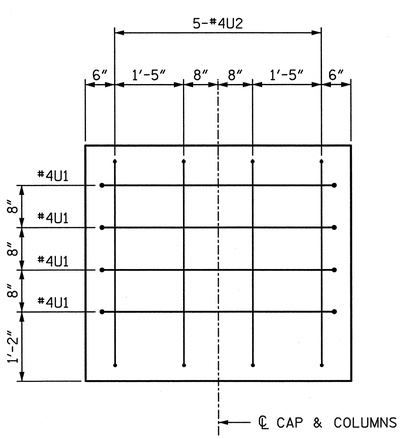

END VIEW D-D

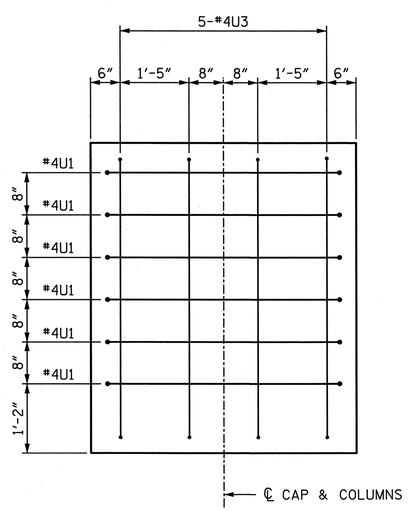

END VIEW E-E

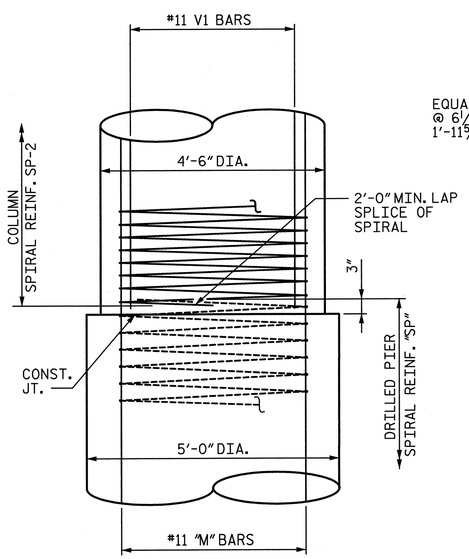

CONSTRUCTION JOINT DETAIL

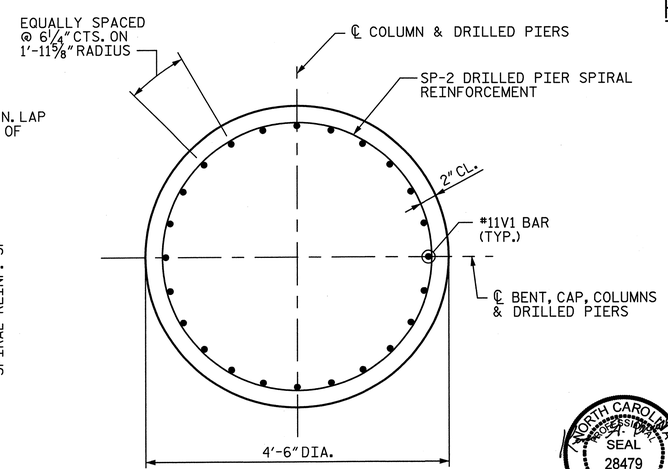

TYPICAL SECTION THROUGH COLUMN

NORTH CAROLINA PROFESSIONAL SEAL 28479 ENGINEER KEVIN G. BAILEY 5-30-13

PROJECT NO. U-2524C

GUILFORD COUNTY

STATION: POT 407+73.35 -L-

= POT 29+32.06 -Y4-

SHEET 2 OF 3

STATE OF NORTH CAROLINA
DEPARTMENT OF TRANSPORTATION
RALEIGH

SUBSTRUCTURE
BENTS 11 - 13
DETAILS

-LEFT LANE-

REVISIONS						SHEET NO.
NO.	BY:	DATE:	NO.	BY:	DATE:	S-203
1			3			TOTAL SHEETS
2			4			836

STV / Ralph Whitehead Associates, Inc.
1000 West Morehead St., Ste. 200
Charlotte, NC 28208
NC License No. F-0991

DRAWN BY : KDH	DATE : 10-12	DESIGN ENGINEER OF RECORD: K. BAILEY	DATE : 5-13
CHECKED BY : JAN	DATE : 12-12		

R:\ustation\Finals\Bent 11-13 - 2 of 3.dgn 5:02:31 PM 5/30/2013

TABLE A
PLAN VIEW INFORMATION

	BENT 11	BENT 12	BENT 13
"X"	11	12	13
"Y"	12	13	14

TABLE B
PLAN VIEW ANGLES

GDR.	BENT 11	BENT 12	BENT 13
	ANGLE "XX"		
"X"-1	89°-19′-58″	89°-43′-45″	89°-59′-40″
"X"-2	89°-19′-58″	89°-43′-45″	89°-59′-40″
"X"-3	89°-19′-58″	89°-43′-45″	89°-59′-40″
"X"-4	89°-19′-57″	89°-43′-45″	89°-59′-40″
"X"-5	89°-19′-57″	89°-43′-44″	89°-59′-40″
"X"-6	89°-19′-56″	89°-43′-44″	89°-59′-40″
"X"-7	89°-19′-56″	89°-43′-44″	89°-59′-40″
"X"-8	89°-19′-55″	89°-43′-44″	89°-59′-40″
	ANGLE "YY"		
GDR.	BENT 11	BENT 12	BENT 13
"Y"-1	90°-24′-13″	90°-02′-32″	90°-00′-00″
"Y"-2	90°-24′-13″	90°-02′-32″	90°-00′-00″
"Y"-3	90°-24′-13″	90°-02′-32″	90°-00′-00″
"Y"-4	90°-24′-13″	90°-02′-32″	90°-00′-00″
"Y"-5	90°-24′-13″	90°-02′-32″	90°-00′-00″
"Y"-6	90°-24′-12″	90°-02′-32″	90°-00′-00″
"Y"-7	90°-24′-12″	90°-02′-32″	90°-00′-00″
"Y"-8	90°-24′-12″	90°-02′-32″	90°-00′-00″

TABLE C
PLAN VIEW DIMENSIONS

	BENT 11	BENT 12	BENT 13
"AA"	3/8″	1/8″	0″
"BB"	3/16″	0″	0″

TABLE D
ELEVATIONS

	BENT 11	BENT 12	BENT 13
"A"	786.50	786.58	785.90
"B"	786.78	786.77	786.10
"C"	787.06	786.96	786.31
"D"	787.33	787.15	786.51
"E"	787.61	787.34	786.70
"F"	787.88	787.53	786.89
"G"	788.16	787.72	787.08
"H"	788.43	787.91	787.27
"I"	782.50	782.58	781.90
"J"	749.33	749.33	748.98
"K"	728.00	725.00	724.00
"L"	704.83	701.83	704.98
"M"	707.83	705.83	704.98

TABLE E
ELEVATION VIEW DIMENSIONS

	BENT 11	BENT 12	BENT 13
"CC"	33′-2″	33′-3″	32′-11″
"DD"	44′-6″	47′-6″	44′-0″
"EE"	41′-6″	43′-6″	44′-0″

TABLE F
DETAIL "A" INFORMATION

	BENT 11	BENT 12	BENT 13
SPAN "X" ANCHOR BOLT DESIGNATION	AB1	AB1	AB6
SPAN "X" ANCHOR BOLT PROJECTION	8″	8″	8 1/2″
SPAN "Y" ANCHOR BOLT DESIGNATION	AB9	AB1	AB1
SPAN "Y" ANCHOR BOLT PROJECTION	9 1/2″	8″	8″

TABLE G
BENT 11 COLUMNS & DRILLED PIERS REINFORCING BILL OF MATERIAL

COLUMN/ DRILLED PIER	BAR	NO.	SIZE	TYPE	●	LENGTH	WEIGHT	DRILLED PIER LENGTH
1 & 2 (1 SHOWN, 2 REQ'D)	M11	24	#11	STR.		53′-9″	6,854	44′-6″
	V1	24	#11	1	36′-5″	38′-0″	4,845	
	SP-11	1	✱✱	4	44′-0″	1,387′-2″	1,447	
	SP-2	1	✱	5	33′-5″	1,754′-0″	1,172	
3 & 4 (1 SHOWN, 2 REQ'D)	M12	24	#11	STR.		50′-9″	6,471	41′-6″
	V1	24	#11	1	36′-5″	38′-0″	4,845	
	SP-12	1	✱✱	4	41′-0″	1,294′-1″	1,350	
	SP-2	1	✱	5	33′-5″	1,754′-0″	1,172	

TABLE G
BENT 12 COLUMNS & DRILLED PIERS REINFORCING BILL OF MATERIAL

COLUMN/ DRILLED PIER	BAR	NO.	SIZE	TYPE	●	LENGTH	WEIGHT	DRILLED PIER LENGTH
1 & 2 (1 SHOWN, 2 REQ'D)	M11	24	#11	STR.		56′-9″	7,236	47′-6″
	V1	24	#11	1	36′-6″	38′-1″	4,856	
	SP-11	1	✱✱	4	47′-0″	1,480′-3″	1,544	
	SP-2	1	✱	5	33′-6″	1,758′-4″	1,175	
3 & 4 (1 SHOWN, 2 REQ'D)	M12	24	#11	STR.		52′-9″	6,726	43′-6″
	V1	24	#11	1	36′-6″	38′-1″	4,856	
	SP-12	1	✱✱	4	43′-0″	1,356′-2″	1,414	
	SP-2	1	✱	5	33′-6″	1,758′-4″	1,175	

TABLE G
BENT 13 COLUMNS & DRILLED PIERS REINFORCING BILL OF MATERIAL

COLUMN/ DRILLED PIER	BAR	NO.	SIZE	TYPE	●	LENGTH	WEIGHT	DRILLED PIER LENGTH
1 THRU 4 (1 SHOWN, 4 REQ'D)	M11	24	#11	STR.		53′-3″	6,790	44′-0″
	V1	24	#11	1	36′-2″	37′-9″	4,814	
	SP-11	1	✱✱	4	43′-6″	1,371′-8″	1,431	
	SP-2	1	✱	5	33′-2″	1,741′-0″	1,163	

✱ THE SP-2 SPIRAL REINFORCING SHALL BE W20 OR D-20 COLD DRAWN WIRE OR #4 PLAIN OR DEFORMED BAR WITH A 3″PITCH.

✱✱ THE SP-1 AND SP-3 SPIRAL REINFORCING STEEL SHALL BE W31 OR D-31 COLD DRAWN WIRE OR #5 PLAIN OR DEFORMED BAR WITH A 5″PITCH.

BAR TYPES

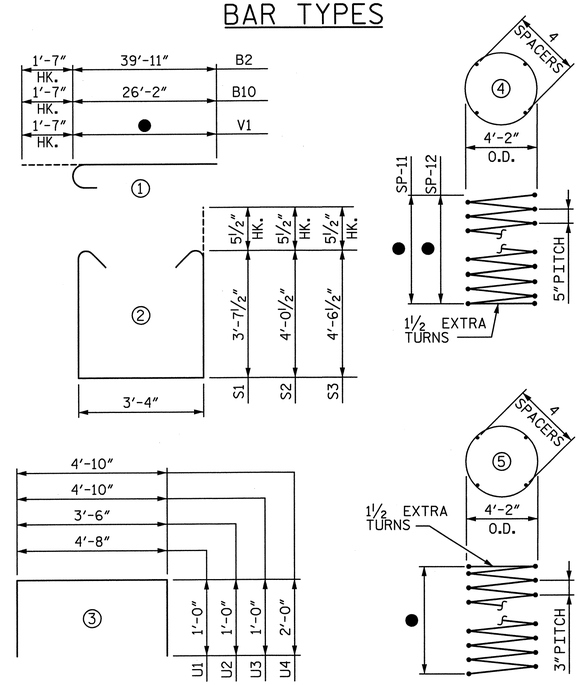

ALL BAR DIMENSIONS ARE OUT TO OUT

CAP REINFORCING BILL OF MATERIAL FOR ONE BENT (3 REQUIRED)

BAR	NO.	SIZE	TYPE	LENGTH	WEIGHT
B1	10	#11	STR.	48′-1″	2,555
B2	9	#11	1	41′-6″	1,984
B3	9	#11	STR.	32′-7″	1.558
B4	8	#5	STR.	37′-4″	312
B5	18	#4	STR.	21′-5″	258
B6	9	#4	STR.	16′-8″	100
B7	34	#4	STR.	4′-10″	110
B8	2	#5	STR.	35′-10″	75
B9	10	#11	STR.	33′-4″	1,771
B10	9	#11	1	27′-9″	1,327
▲ B11	9	#4	STR.	11′-11″	72
S1	76	#5	2	11′-6″	912
S2	50	#5	2	12′-4″	643
S3	76	#5	2	13′-4″	1,057
U1	9	#4	3	6′-8″	41
U2	5	#4	3	5′-6″	19
U3	5	#4	3	6′-10″	23
U4	116	#4	3	8′-10″	684

▲ B11 BAR SHOWN ABOVE IS FOR BENT 11 ONLY.

NOTE:
FOR ● AND COLUMNS & DRILLED PIERS REINFORCING BILL OF MATERIAL, SEE TABLE G THIS SHEET.

QUANTITIES

		BENT 11	BENT 12	BENT 13
REINFORCING STEEL	LBS.	59,531	60,777	59,845
SPIRAL REINFORCING STEEL	LBS.	10,282	10,616	10,376
CLASS A CONCRETE : POUR 2 - COLUMNS	CU. YDS.	78.1	78.3	77.6
POUR 3 - CAP	CU. YDS.	68.5	64.3	64.7
TOTAL	CU. YDS.	146.6	142.6	142.3
5′-0″Ø DRILLED PIERS IN SOIL	L.F.	137	147	140
5′-0″Ø DRILLED PIERS NOT IN SOIL	L.F.	35	35	36
TOTAL 5′-0″Ø DRILLED PIERS	L.F.	172	182	176
PERMANENT STEEL CASING FOR 5′-0″Ø DRILLED PIERS	L.F.	90	102	104
DRILLED PIER CONCRETE : POUR 1	CU. YDS.	125.1	132.4	128.0
CSL TUBES	L.F.	890	940	910

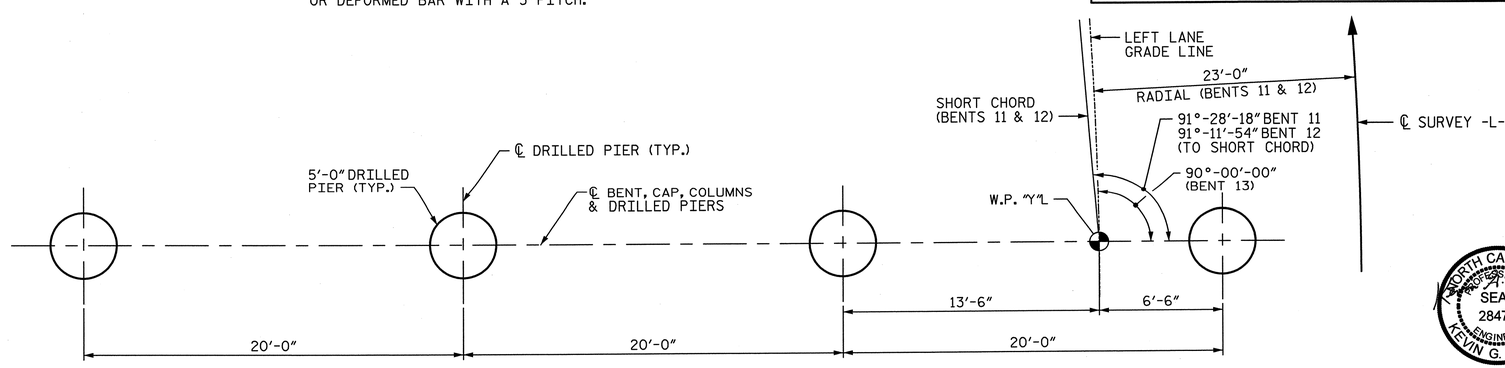

PLAN OF DRILLED PIERS

NOTE:
SEE TABLE A THIS SHEET FOR "Y".

PROJECT NO. U-2524C
GUILFORD COUNTY
STATION: POT 407+73.35 -L-
= POT 29+32.06 -Y4-

SHEET 3 OF 3

STATE OF NORTH CAROLINA
DEPARTMENT OF TRANSPORTATION
RALEIGH

SUBSTRUCTURE
BENTS 11 - 13
DETAILS & BILL OF MATERIAL

-LEFT LANE-

NORTH CAROLINA PROFESSIONAL SEAL 28479 ENGINEER KEVIN G. BAILEY 5-30-13

STV / Ralph Whitehead Associates, Inc.
1000 West Morehead St. Ste. 200
Charlotte, NC 28208
NC License No. F-0991

REVISIONS								SHEET NO.
NO.	BY:	DATE:	NO.	BY:	DATE:			S-204
1			3					TOTAL SHEETS
2			4					836

DRAWN BY : KDH DATE : 10-12
CHECKED BY : JAN DATE : 12-12
DESIGN ENGINEER OF RECORD: K. BAILEY DATE : 5-13

R:\ustation\Finals\Bent 11-13 - 3 of 3.dgn 5:02:35 PM 5/30/2013

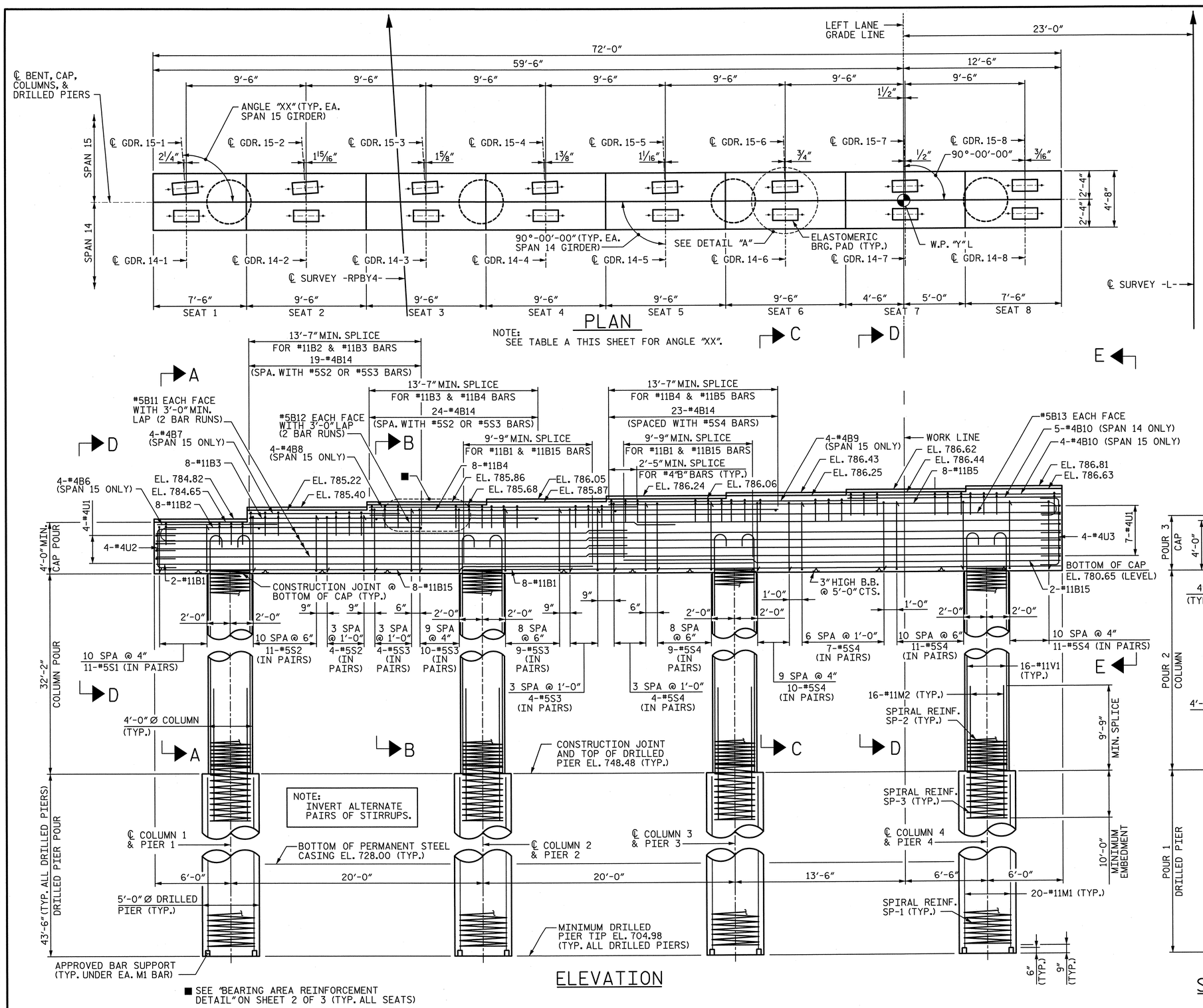

TABLE A	
PLAN VIEW ANGLES	
	ANGLE "XX"
15-1	94°-34'-47"
15-2	93°-58'-45"
15-3	93°-22'-40"
15-4	92°-46'-32"
15-5	92°-10'-23"
15-6	91°-34'-11"
15-7	90°-57'-58"
15-8	90°-21'-44"

NOTES:

1. ALL REINFORCING STEEL IN THE DRILLED PIERS IS INCLUDED IN THE PAY ITEMS FOR "REINFORCING STEEL" AND "SPIRAL COLUMN REINFORCING STEEL".
2. THE LOCATION OF THE CONSTRUCTION JOINT IN THE DRILLED PIERS IS BASED ON AN APPROXIMATE GROUND LINE ELEVATION. IF THE CONSTRUCTION JOINT IS ABOVE THE ACTUAL GROUND ELEVATION, THE CONTRACTOR SHALL PLACE THE CONSTRUCTION JOINT 1 FOOT BELOW THE GROUND LINE.
3. STIRRUPS AND "U BARS" IN CAP MAY BE SHIFTED SLIGHTLY AS NECESSARY TO CLEAR ANCHOR BOLTS.
4. HOOKS ON BARS MAY BE TURNED AS NECESSARY FOR PLACING REINFORCING STEEL.
5. A CONSTRUCTION JOINT AT MID-HEIGHT OF COLUMN IS PERMITTED.
6. FOR "AB1" ANCHOR BOLTS, SEE "ELASTOMERIC BEARING DETAILS" SHEET.
7. SEE "GENERAL DRAWING GENERAL NOTES" SHEET FOR ADDITIONAL NOTES.
8. SEE SHEET 2 OF 3 FOR SECTIONS CALLED OUT ON ELEVATION VIEW.
9. THE TOP SURFACE AREAS OF THE BENT CAPS SHALL BE CURED IN ACCORDANCE WITH THE STANDARD SPECIFICATIONS EXCEPT MEMBRANE CURING COMPOUND METHOD SHALL NOT BE USED.

NORTH CAROLINA PROFESSIONAL SEAL 28479 ENGINEER KEVIN G. BAILEY 5-30-13

PROJECT NO. U-2524C

GUILFORD COUNTY

STATION: POT 407+73.35 -L-
= POT 29+32.06 -Y4-

SHEET 1 OF 3

STATE OF NORTH CAROLINA
DEPARTMENT OF TRANSPORTATION
RALEIGH

SUBSTRUCTURE
BENT 14
PLAN & ELEVATION

-LEFT LANE-

DRAWN BY : KDH	DATE : 11-12	DESIGN ENGINEER OF RECORD: K. BAILEY	DATE : 5-13
CHECKED BY : JAN	DATE : 12-12		

STV / Ralph Whitehead Associates, Inc.
1000 West Morehead St. Ste. 200
Charlotte, NC 28208
NC License No. F-0991

REVISIONS								SHEET NO.
NO.	BY:	DATE:	NO.	BY:	DATE:			S-205
1			3					TOTAL SHEETS
2			4					836

5/30/2013 5:02:40 PM R:\ustation\Finals\Bent 14 - 1of 3.dgn

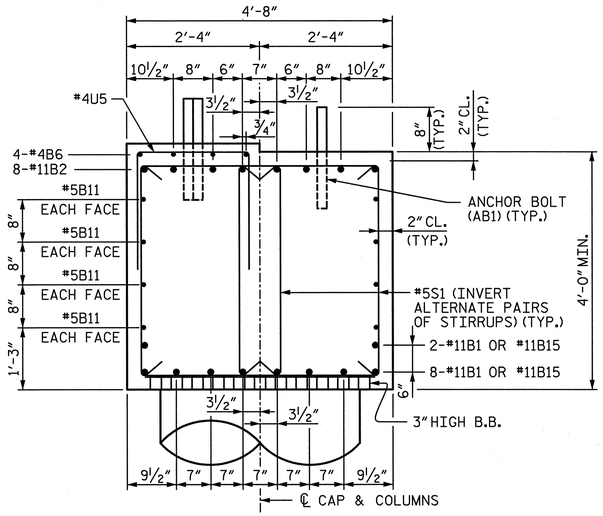

SECTION A-A

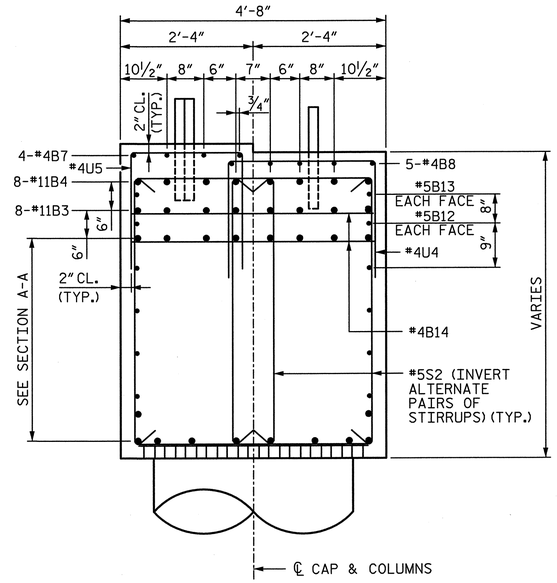

SECTION B-B

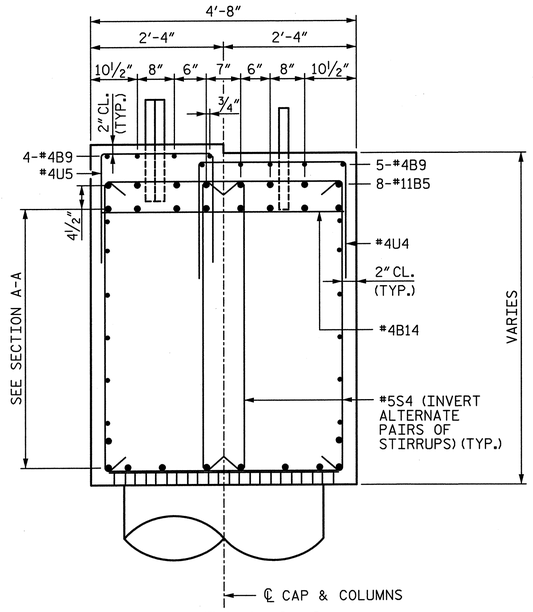

SECTION C-C

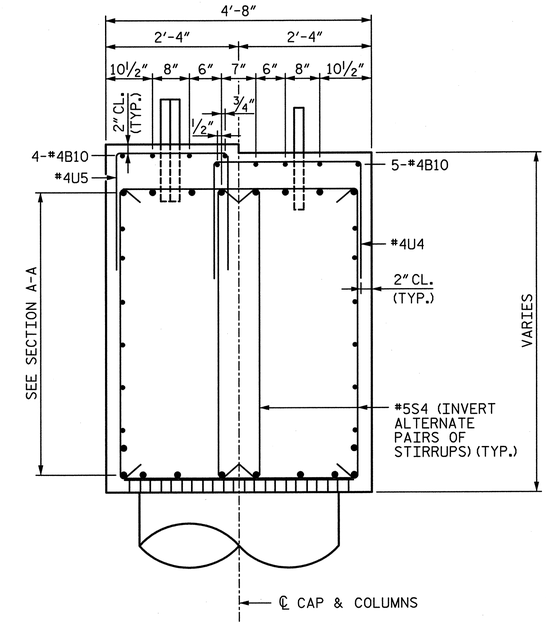

SECTION D-D

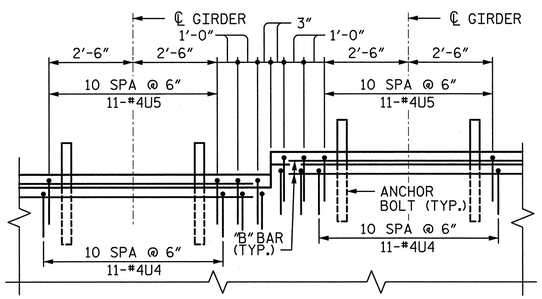

BEARING AREA REINFORCEMENT DETAIL

(TYP AT EACH BRIDGE SEAT)

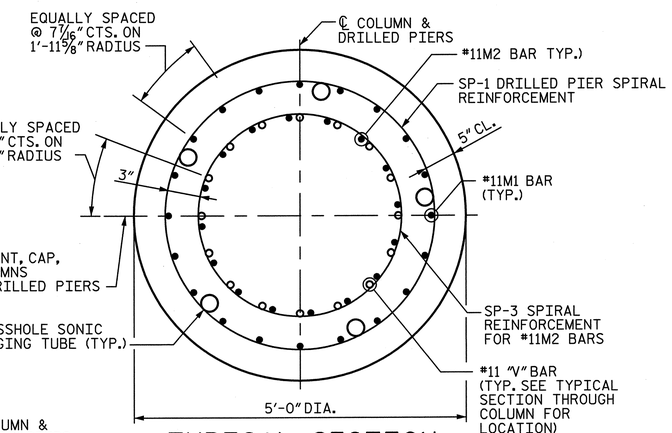

TYPICAL SECTION THROUGH DRILLED PIER

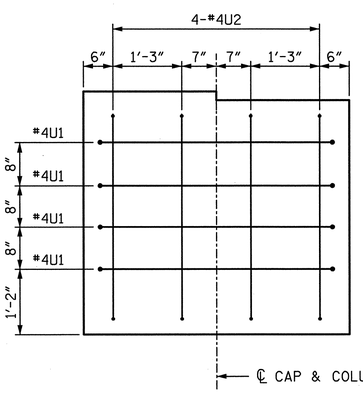

END VIEW D-D

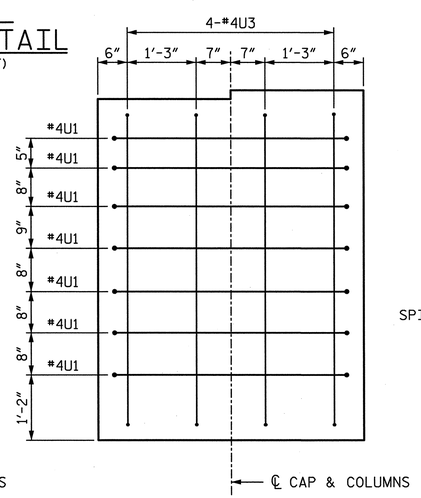

END VIEW E-E

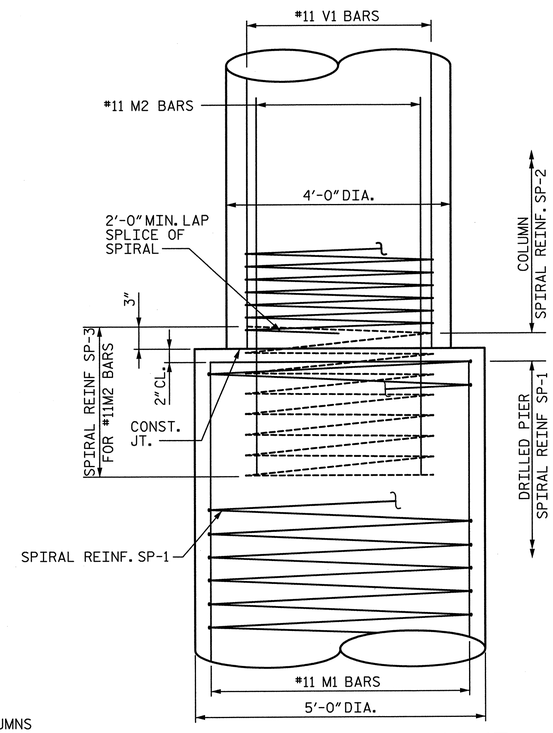

CONSTRUCTION JOINT DETAIL

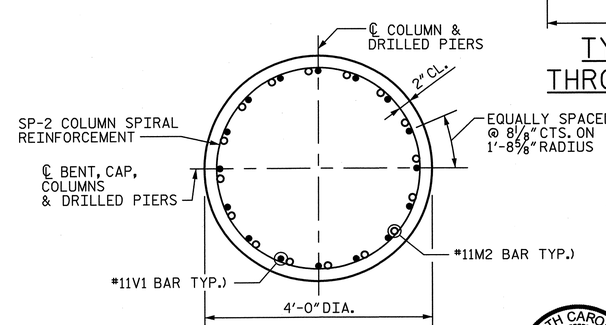

TYPICAL SECTION THROUGH COLUMN

NORTH CAROLINA PROFESSIONAL SEAL 28479 ENGINEER KEVIN G. BAILEY 5-30-13

PROJECT NO. U-2524C

GUILFORD COUNTY

STATION: POT 407+73.35 -L-
= POT 29+32.06 -Y4-

SHEET 2 OF 3

STATE OF NORTH CAROLINA
DEPARTMENT OF TRANSPORTATION
RALEIGH

SUBSTRUCTURE
BENT 14
DETAILS

-LEFT LANE-

REVISIONS									SHEET NO.
NO.	BY:	DATE:	NO.	BY:	DATE:				S-206
1			3						TOTAL SHEETS
2			4						83

STV/ Ralph Whitehead Associates, Inc.
1000 West Morehead St., Ste. 200
Charlotte, NC 28208
NC License No. F-0991

DRAWN BY : KDH	DATE : 11-12	DESIGN ENGINEER OF RECORD: K. BAILEY	DATE : 5-13
CHECKED BY : JAN	DATE : 12-12		

5/30/2013 5:02:45 PM R:\station\Finals\Bent 14 - 2 of 3.dgn

QUANTITIES		
REINFORCING STEEL	LBS.	53,091
SPIRAL REINFORCING STEEL	LBS.	10,921
CLASS A CONCRETE : POUR 2 - COLUMNS	CU. YDS.	59.9
POUR 3 - CAP	CU. YDS.	66.0
TOTAL	CU. YDS.	125.9
5'-0"Ø DRILLED PIERS IN SOIL	L.F.	139
5'-0"Ø DRILLED PIERS NOT IN SOIL	L.F.	35
TOTAL 5'-0"Ø DRILLED PIERS	L.F.	174
PERMANENT STEEL CASING FOR 5'-0"Ø DRILLED PIERS	L.F.	86
DRILLED PIER CONCRETE : POUR 1	CU. YDS.	126.5
CSL TUBES	L.F.	900

BAR TYPES

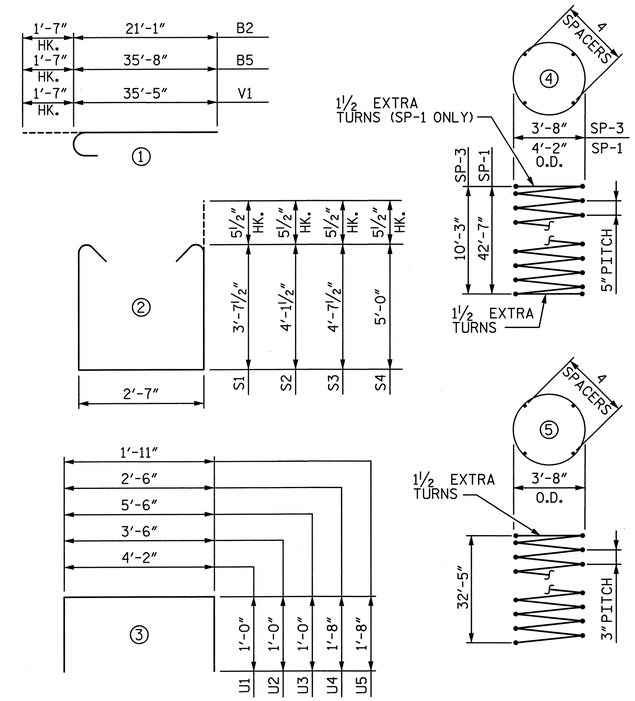

THE CONTRACTOR'S ATTENTION IS CALLED TO THE FACT THAT THE LONGITUDINAL REINFORCEMENT FOR THE DRILLED PIERS IS DETAILED WITH 3 FEET OF EXTRA LENGTH.

ALL BAR DIMENSIONS ARE OUT TO OUT

BILL OF MATERIAL

BAR	NO.	SIZE	TYPE	LENGTH	WEIGHT
B1	10	#11	STR.	47'-10"	2,541
B2	8	#11	①	22'-8"	963
B3	8	#11	STR.	23'-1"	981
B4	8	#11	STR.	32'-7"	1,385
B5	8	#11	①	37'-3"	1,583
B6	4	#4	STR.	9'-11"	26
B7	4	#4	STR.	11'-11"	32
B8	4	#4	STR.	21'-5"	57
B9	4	#4	STR.	21'-1"	56
B10	9	#4	STR.	16'-8"	100
B11	16	#5	STR.	37'-4"	623
B12	4	#5	STR.	33'-7"	140
B13	2	#5	STR.	54'-8"	114
B14	66	#4	STR.	4'-4"	191
B15	10	#11	STR.	33'-7"	1,784
M1	80	#11	STR.	45'-10"	19,481
M2	64	#11	STR.	19'-9"	6,716
S1	22	#5	②	10'-9"	247
S2	30	#5	②	11'-9"	368
S3	54	#5	②	12'-9"	718
S4	104	#5	②	13'-6"	1,464
U1	11	#4	③	6'-2"	46
U2	4	#4	③	5'-6"	15
U3	4	#4	③	7'-6"	20
U4	116	#4	③	5'-10"	452
U5	116	#4	③	5'-3"	407
V1	64	#11	①	37'-0"	12,581
SP-1	4	✱✱	④	1,360'-9"	5,677
SP-2	4	✱	⑤	1,496'-2"	3,998
SP-3	4	✱✱	④	298'-7"	1,246

✱✱ THE SP-1 AND SP-3 SPIRAL REINFORCING STEEL SHALL BE W31 OR D-31 COLD DRAWN WIRE OR #5 PLAIN OR DEFORMED BAR WITH A 5" PITCH.

✱ THE SP-2 SPIRAL REINFORCING SHALL BE W20 OR D-20 COLD DRAWN WIRE OR #4 PLAIN OR DEFORMED BAR WITH A 3" PITCH.

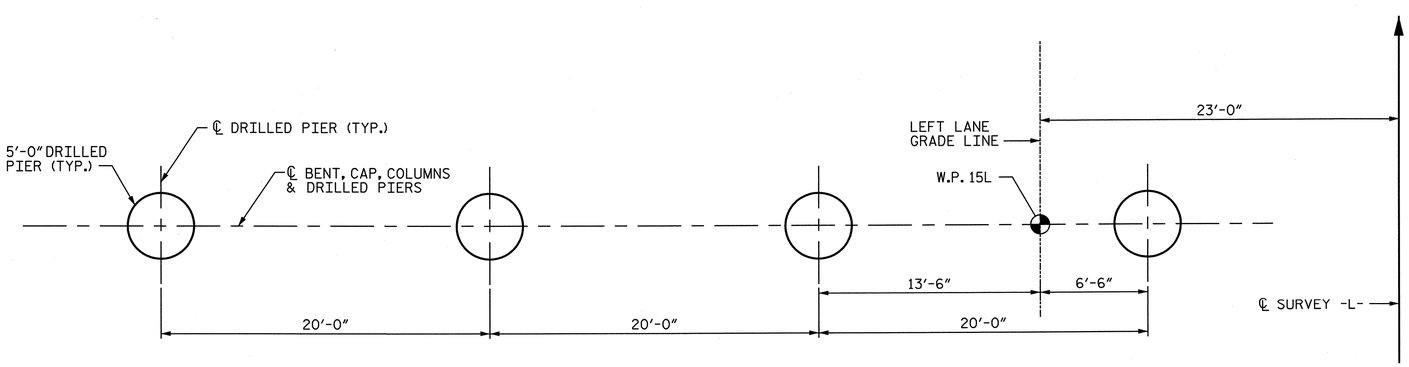

PLAN OF DRILLED PIERS

PROJECT NO. U-2524C

GUILFORD COUNTY

STATION: POT 407+73.35 -L-
= POT 29+32.06 -Y4-

SHEET 3 OF 3

STATE OF NORTH CAROLINA
DEPARTMENT OF TRANSPORTATION
RALEIGH

SUBSTRUCTURE BENT 14 DETAILS & BILL OF MATERIAL

-LEFT LANE-

NORTH CAROLINA PROFESSIONAL SEAL 28479 ENGINEER KEVIN G. BAILEY 5-30-13

STV / Ralph Whitehead Associates, Inc.
1000 West Morehead St. Ste. 200
Charlotte, NC 28208
NC License No. F-0991

REVISIONS						
NO.	BY:	DATE:	NO.	BY:	DATE:	SHEET NO. S-207
1			3			TOTAL SHEETS
2			4			836

DRAWN BY : KDH DATE : 11-12
CHECKED BY : JAN DATE : 12-12

DESIGN ENGINEER OF RECORD: K. BAILEY DATE : 5-13

5/30/2013 5:02:50 PM R:\station\Finals\Bent 14 - 3 of 3.dgn

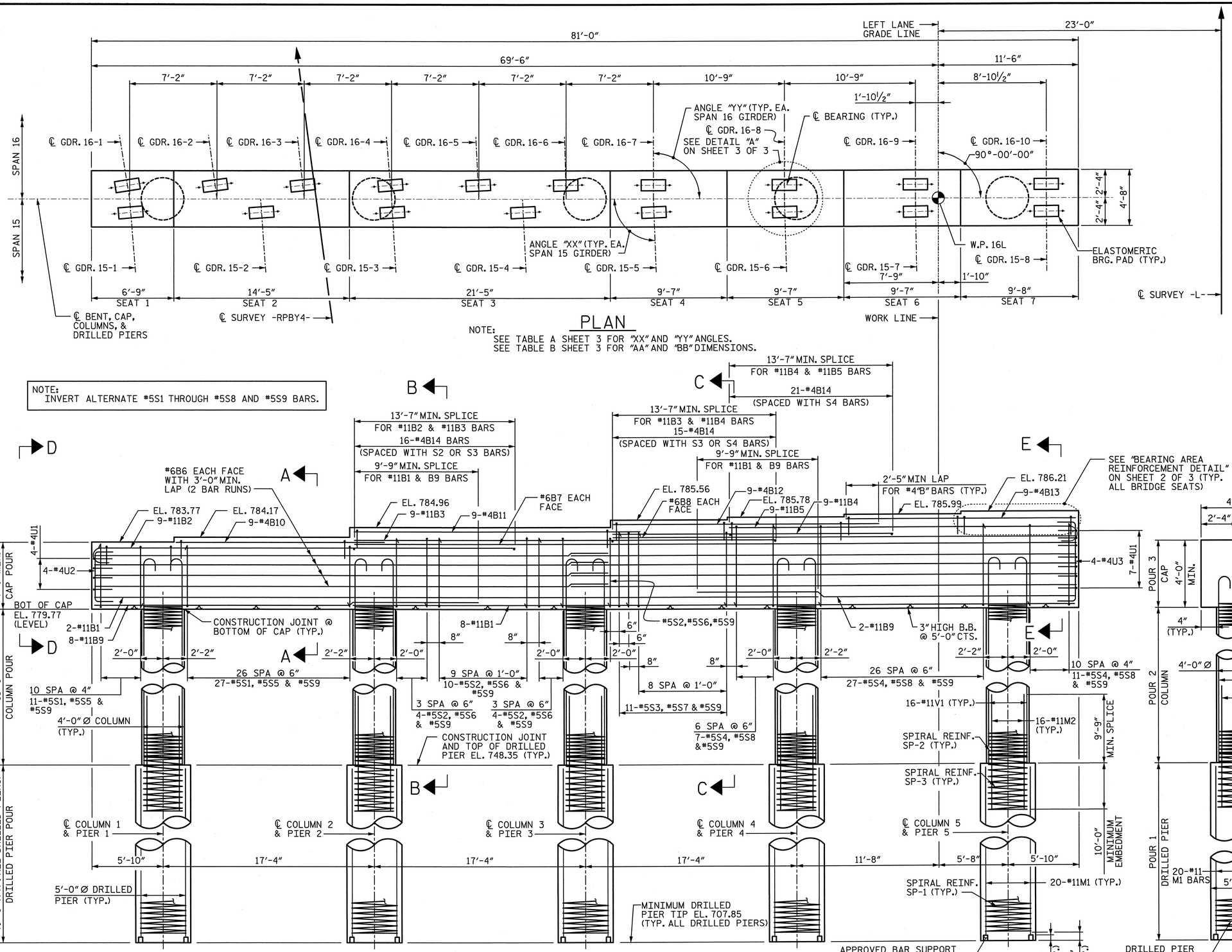

NOTES:

1. ALL REINFORCING STEEL IN THE DRILLED PIERS IS INCLUDED IN THE PAY ITEMS FOR "REINFORCING STEEL" AND "SPIRAL COLUMN REINFORCING STEEL".
2. THE LOCATION OF THE CONSTRUCTION JOINT IN THE DRILLED PIERS IS BASED ON AN APPROXIMATE GROUND LINE ELEVATION. IF THE CONSTRUCTION JOINT IS ABOVE THE ACTUAL GROUND ELEVATION, THE CONTRACTOR SHALL PLACE THE CONSTRUCTION JOINT 1 FOOT BELOW THE GROUND LINE.
3. STIRRUPS AND "U BARS" IN CAP MAY BE SHIFTED SLIGHTLY AS NECESSARY TO CLEAR ANCHOR BOLTS.
4. HOOKS ON BARS MAY BE TURNED AS NECESSARY FOR PLACING REINFORCING STEEL.
5. A CONSTRUCTION JOINT AT MID-HEIGHT OF COLUMN IS PERMITTED.
6. FOR "AB7" AND "AB8" ANCHOR BOLTS, SEE "ELASTOMERIC BEARING DETAILS" SHEET.
7. SEE "GENERAL DRAWING GENERAL NOTES" SHEET FOR ADDITIONAL NOTES.
8. SEE SHEET 2 OF 3 FOR SECTIONS CALLED OUT ON ELEVATION VIEW.
9. THE TOP SURFACE AREAS OF THE BENT CAPS SHALL BE CURED IN ACCORDANCE WITH THE STANDARD SPECIFICATIONS EXCEPT THE MEMBRANE CURING COMPOUND METHOD SHALL NOT BE USED.

NORTH CAROLINA PROFESSIONAL SEAL 28479 ENGINEER KEVIN G. BAILEY 5-30-13

PROJECT NO. U-2524C

GUILFORD COUNTY

STATION: POT 407+73.35 -L-
= POT 29+32.06 -Y4-

SHEET 1 OF 3

STATE OF NORTH CAROLINA
DEPARTMENT OF TRANSPORTATION
RALEIGH

SUBSTRUCTURE
BENT 15
PLAN & ELEVATION

-LEFT LANE-

REVISIONS						SHEET NO.
NO.	BY:	DATE:	NO.	BY:	DATE:	S-208
1			3			TOTAL SHEETS
2			4			836

STV / Ralph Whitehead Associates, Inc.
1000 West Morehead St., Ste. 200
Charlotte, NC 28208
NC License No. F-0991

DRAWN BY : JMP DATE : 11-12
CHECKED BY : JAN DATE : 12-12
DESIGN ENGINEER OF RECORD: K. BAILEY DATE : 5-13

5/30/2013 5:02:55 PM R:\station\Finals\Bent 15 - 1of 3.dgn

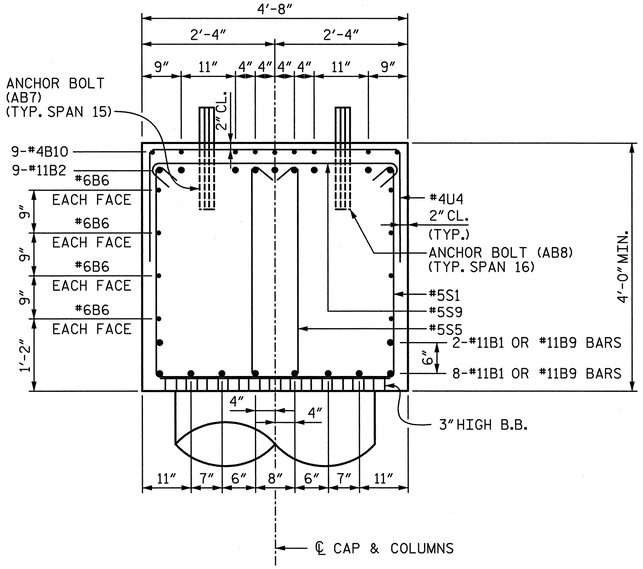

SECTION A-A

NOTE:
INVERT ALTERNATE #5S1, #5S5 AND #5S9 BARS.

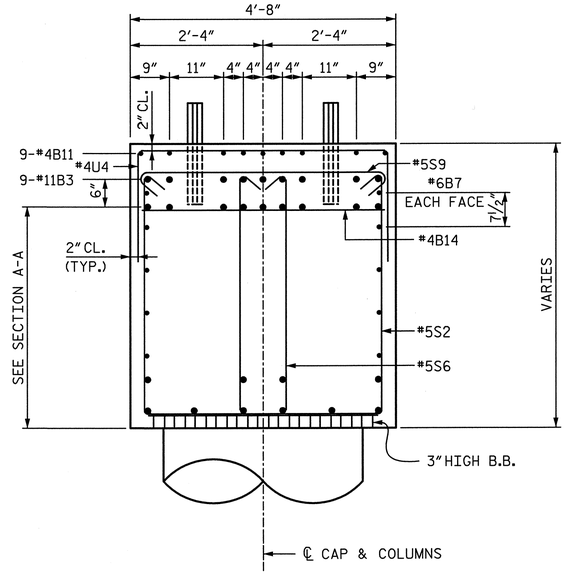

SECTION B-B

NOTE:
INVERT ALTERNATE #5S2, #5S6 AND #5S9 BARS.

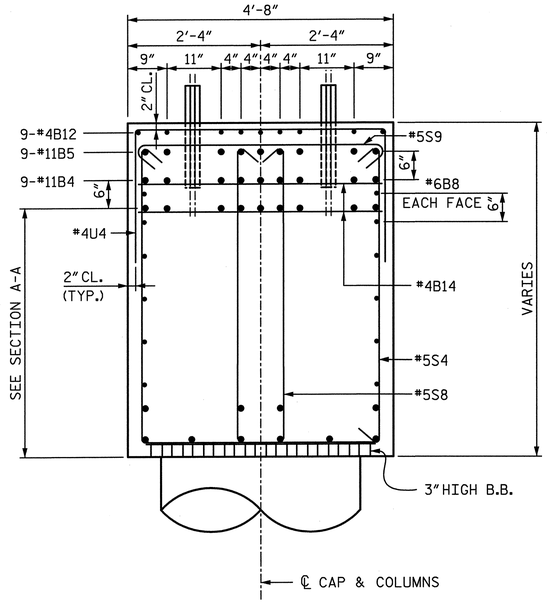

SECTION C-C

NOTE:
INVERT ALTERNATE #5S4, #5S8 AND #5S9 BARS.

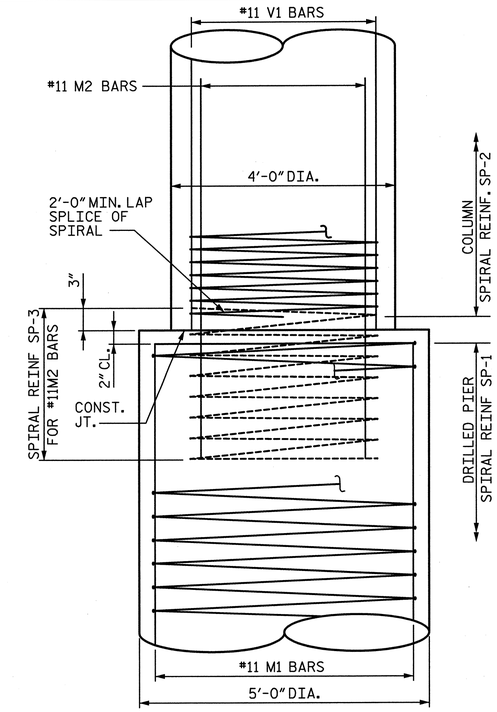

CONSTRUCTION JOINT DETAIL

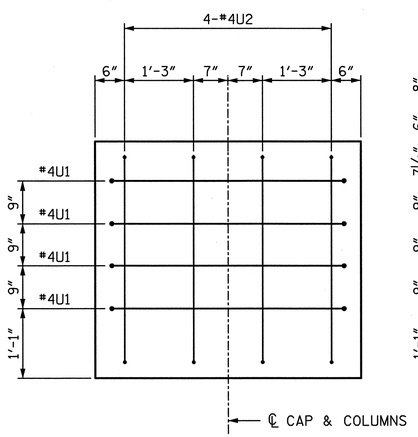

END VIEW D-D

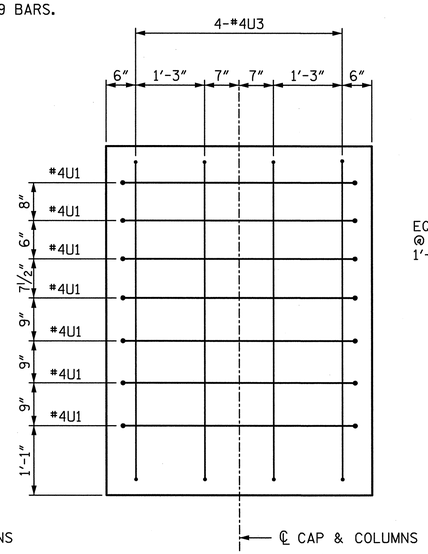

END VIEW E-E

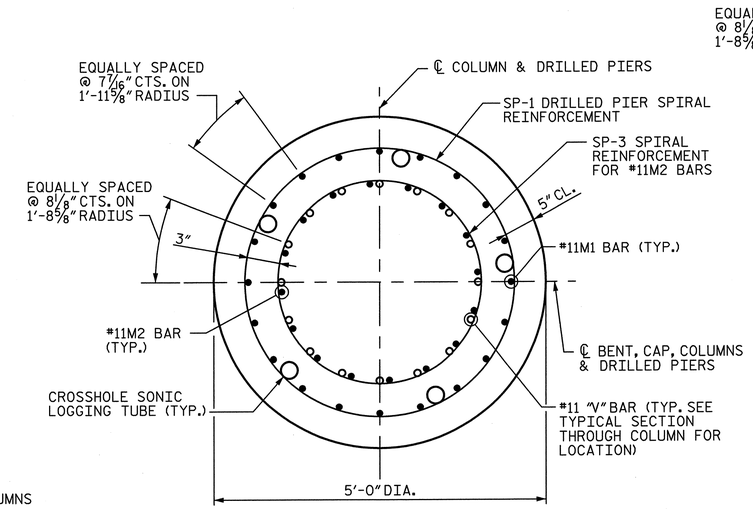

TYPICAL SECTION THROUGH DRILLED PIER

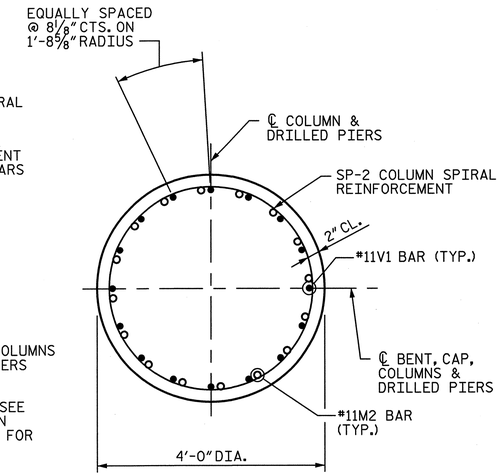

TYPICAL SECTION THROUGH COLUMN

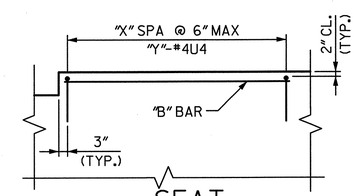

SEAT REINFORCEMENT DETAIL

(TYP. ALL BRIDGE SEATS)

NOTE:
SEE TABLE C SHEET 3 FOR "X" AND "Y" VALUES.

PROJECT NO. U-2524C

GUILFORD COUNTY

STATION: POT 407+73.35 -L-
= POT 29+32.06 -Y4-

SHEET 2 OF 3

NORTH CAROLINA PROFESSIONAL SEAL 28479 ENGINEER KEVIN G. BAILEY
5-30-13

STATE OF NORTH CAROLINA
DEPARTMENT OF TRANSPORTATION
RALEIGH

SUBSTRUCTURE
BENT 15
DETAILS

-LEFT LANE-

REVISIONS								SHEET NO.
NO.	BY:	DATE:	NO.	BY:	DATE:			S-209
1			3					TOTAL SHEETS
2			4					836

STV / Ralph Whitehead Associates, Inc.
1000 West Morehead St., Ste. 200
Charlotte, NC 28208
NC License No. F-0991

DRAWN BY : JMP DATE : 11-12
CHECKED BY : JAN DATE : 12-12

DESIGN ENGINEER OF RECORD: K. BAILEY DATE : 5-13

5/30/2013 5:03:00 PM R:\ustation\Finals\Bent 15 - 2 of 3.dgn

TABLE A PLAN VIEW ANGLES	
GDR.	ANGLE "XX"
15-1	94°-34′-47″
15-2	93°-58′-45″
15-3	93°-22′-40″
15-4	92°-46′-32″
15-5	92°-10′-23″
15-6	91°-34′-11″
15-7	90°-57′-58″
15-8	90°-21′-44″
	ANGLE "YY"
16-1	98°-58′-09″
16-2	97°-31′-00″
16-3	96°-05′-59″
16-4	94°-43′-07″
16-5	92°-44′-09″
16-6	91°-22′-07″
16-7	90°-00′-00″
16-8	90°-00′-00″
16-9	90°-00′-00″
16-10	90°-00′-00″

QUANTITIES		
REINFORCING STEEL	LBS.	63,766
SPIRAL REINFORCING STEEL	LBS.	13,051
CLASS A CONCRETE : POUR 2 - COLUMNS	CU. YDS.	73.1
POUR 3 - CAP	CU. YDS.	75.4
TOTAL	CU. YDS.	148.5
5′-0″ Ø DRILLED PIERS IN SOIL	L.F.	166
5′-0″ Ø DRILLED PIERS NOT IN SOIL	L.F.	37
TOTAL 5′-0″ Ø DRILLED PIERS	L.F.	203
DRILLED PIER CONCRETE : POUR 1	CU. YDS.	147.3
CSL TUBES	L.F.	1,050

TABLE B PLAN VIEW DIMENSIONS	
GDR.	DIMENSION "AA"
15-1	2 1/4″
15-2	1 15/16″
15-3	1 5/8″
15-4	1 3/8″
15-5	1 1/16″
15-6	3/4″
15-7	1/2″
15-8	3/16″
	DIMENSION "BB"
16-1	4 7/16″
16-2	3 11/16″
16-3	3″
16-4	2 5/16″
16-5	1 5/16″
16-6	11/16″
16-7	0″
16-8	0″
16-9	0″
16-10	0″

TABLE C SEAT REINFORCEMENT DETAIL INFORMATION		
SEAT	"X"	"Y"
1	13	14
2	28	29
3	42	43
4	19	20
5	19	20
6	19	20
7	19	20

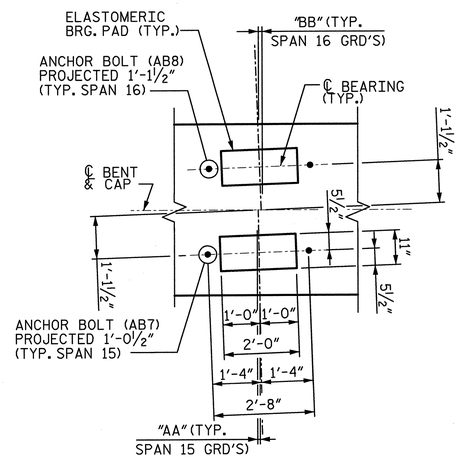

DETAIL "A"

(TYP. AT EACH BRIDGE SEAT)

NOTE:
SEE TABLE B THIS SHEET FOR "AA" AND "BB" DIMENSIONS.

BAR TYPES

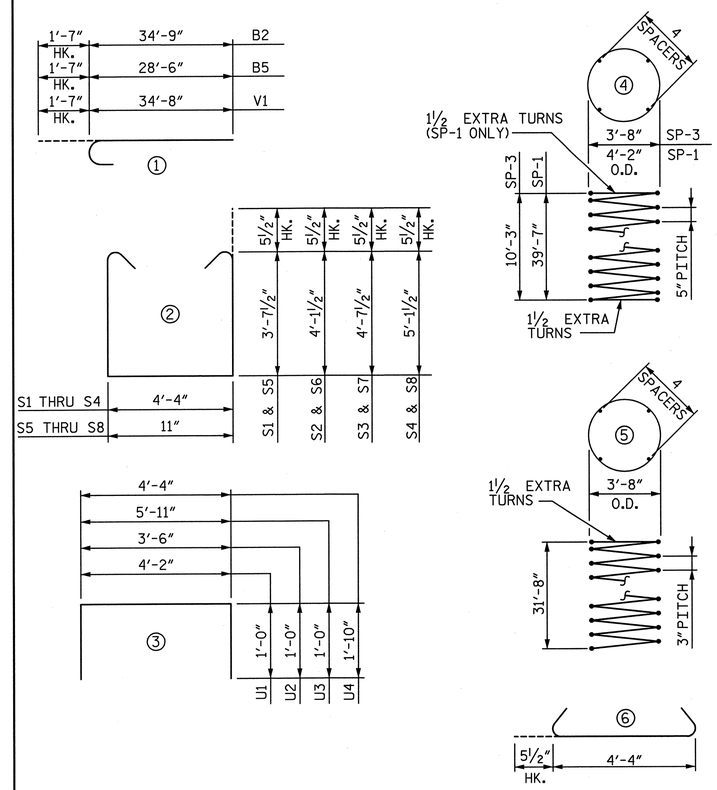

THE CONTRACTOR'S ATTENTION IS CALLED TO THE FACT THAT THE LONGITUDINAL REINFORCEMENT FOR THE DRILLED PIERS IS DETAILED WITH 3 FEET OF EXTRA LENGTH.

ALL BAR DIMENSIONS ARE OUT TO OUT

BILL OF MATERIAL

BAR	NO.	SIZE	TYPE	LENGTH	WEIGHT
B1	10	#11	STR.	59′-8″	3,170
B2	9	#11	①	36′-4″	1,737
B3	9	#11	STR.	35′-0″	1,674
B4	9	#11	STR.	23′-2″	1,108
B5	9	#11	①	30′-1″	1,438
B6	16	#6	STR.	42′-3″	1,015
B7	2	#6	STR.	59′-6″	179
B8	2	#6	STR.	38′-1″	114
B9	10	#11	STR.	30′-9″	1,634
B10	9	#4	STR.	16′-10″	101
B11	9	#4	STR.	23′-10″	143
B12	9	#4	STR.	21′-7″	130
B13	9	#4	STR.	18′-11″	114
B14	52	#4	STR.	4′-4″	151
M1	100	#11	STR.	42′-10″	22,757
M2	80	#11	STR.	19′-9″	8,395
S1	38	#5	②	12′-6″	495
S2	19	#5	②	13′-6″	268
S3	11	#5	②	14′-6″	166
S4	45	#5	②	15′-6″	727
S5	38	#5	②	9′-1″	360
S6	19	#5	②	10′-1″	200
S7	11	#5	②	11′-1″	127
S8	45	#5	②	12′-1″	567
S9	113	#5	⑥	5′-3″	619
U1	11	#4	③	6′-2″	46
U2	4	#4	③	5′-6″	15
U3	4	#4	③	7′-11″	21
U4	166	#4	③	8′-0″	887
V1	80	#11	①	36′-3″	15,408
SP-1	5	✱✱	④	1,267′-8″	6,611
SP-2	5	✱	⑤	1,462′-0″	4,883
SP-3	5	✱✱	④	298′-7″	1,557

✱ THE SP-2 SPIRAL REINFORCING SHALL BE W20 OR D-20 COLD DRAWN WIRE OR #4 PLAIN OR DEFORMED BAR WITH A 3″PITCH.

✱✱ THE SP-1 AND SP-3 SPIRAL REINFORCING STEEL SHALL BE W31 OR D-31 COLD DRAWN WIRE OR #5 PLAIN OR DEFORMED BAR WITH A 5″PITCH.

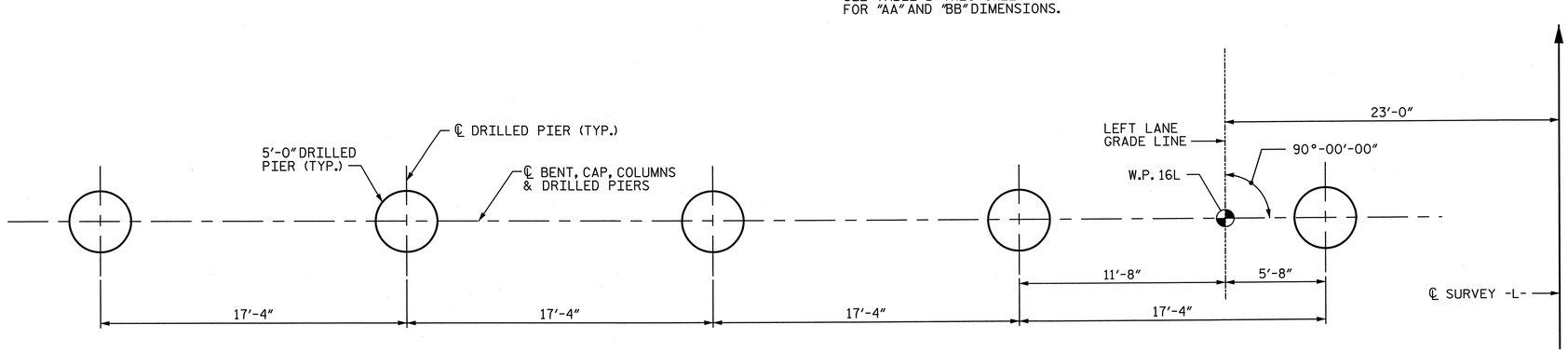

PLAN OF DRILLED PIERS

PROJECT NO. U-2524C
GUILFORD COUNTY
STATION: POT 407+73.35 -L-
= POT 29+32.06 -Y4-

SHEET 3 OF 3

STATE OF NORTH CAROLINA
DEPARTMENT OF TRANSPORTATION
RALEIGH

SUBSTRUCTURE BENT 15 DETAILS & BILL OF MATERIAL

-LEFT LANE-

NORTH CAROLINA PROFESSIONAL SEAL 28479 ENGINEER KEVIN G. BAILEY
5-30-13

STV / Ralph Whitehead Associates, Inc.
1000 West Morehead St., Ste. 200
Charlotte, NC 28208
NC License No. F-0991

REVISIONS							
NO.	BY:	DATE:	NO.	BY:	DATE:	SHEET NO. S-210
1			3			TOTAL SHEETS 836
2			4			

DRAWN BY : JMP	DATE : 11-12	DESIGN ENGINEER OF RECORD: K. BAILEY	DATE : 5-13
CHECKED BY : JAN	DATE : 12-12		

5/30/2013 5:03:05 PM R:\ustation\Finals\Bent 15 - 3 of 3.dgn

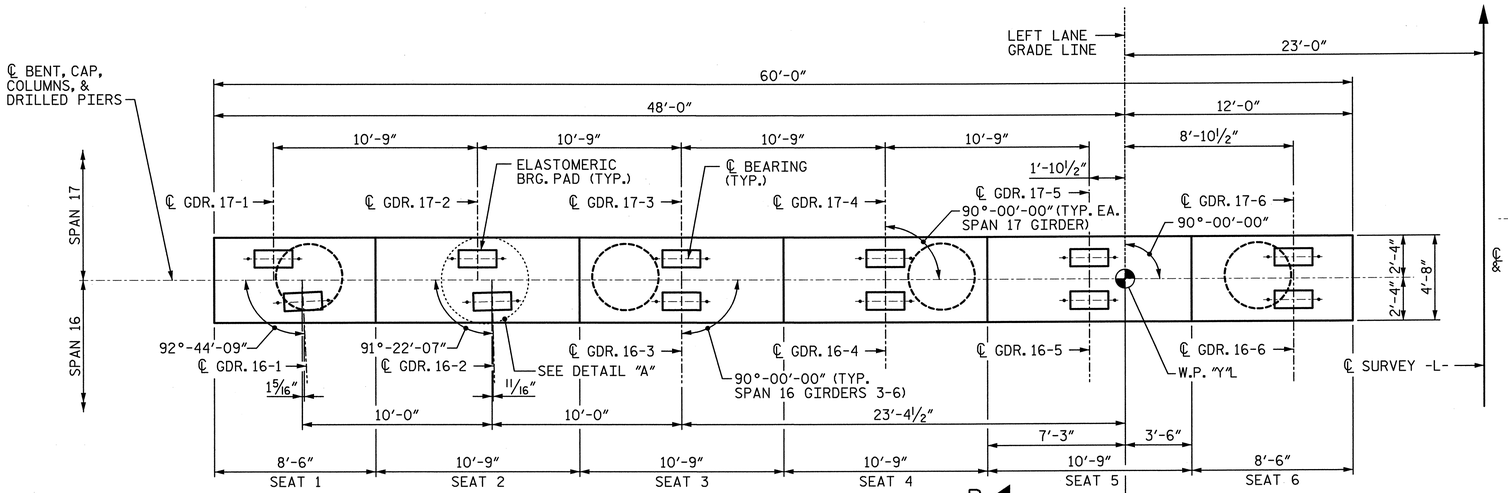

PLAN

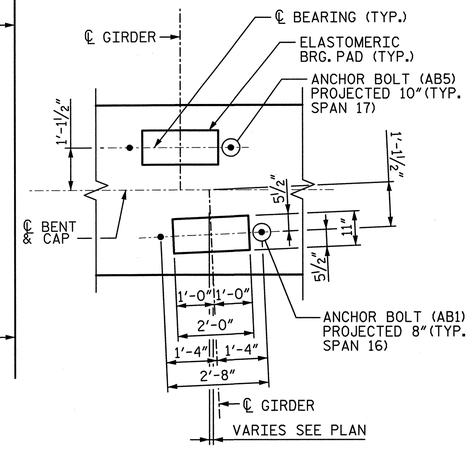

DETAIL "A"

(TYP. AT EACH BRIDGE SEAT)

NOTES:

1. ALL REINFORCING STEEL IN THE DRILLED PIERS IS INCLUDED IN THE PAY ITEMS FOR "REINFORCING STEEL" AND "SPIRAL COLUMN REINFORCING STEEL".
2. THE LOCATION OF THE CONSTRUCTION JOINT IN THE DRILLED PIERS IS BASED ON AN APPROXIMATE GROUND LINE ELEVATION. IF THE CONSTRUCTION JOINT IS ABOVE THE ACTUAL GROUND ELEVATION, THE CONTRACTOR SHALL PLACE THE CONSTRUCTION JOINT 1 FOOT BELOW THE GROUND LINE.
3. STIRRUPS AND "U BARS" IN CAP MAY BE SHIFTED SLIGHTLY AS NECESSARY TO CLEAR ANCHOR BOLTS.
4. HOOKS ON BARS MAY BE TURNED AS NECESSARY FOR PLACING REINFORCING STEEL.
5. A CONSTRUCTION JOINT AT MID-HEIGHT OF COLUMN IS PERMITTED.
6. FOR "AB1" AND "AB5" ANCHOR BOLTS, SEE "ELASTOMERIC BEARING DETAILS" SHEET.
7. SEE "GENERAL DRAWING GENERAL NOTES" SHEET FOR ADDITIONAL NOTES.
8. SEE SHEET 2 OF 3 FOR SECTIONS CALLED OUT ON ELEVATION VIEW.
9. THE TOP SURFACE AREAS OF THE BENT CAPS SHALL BE CURED IN ACCORDANCE WITH THE STANDARD SPECIFICATIONS EXCEPT THE MEMBRANE CURING COMPOUND METHOD SHALL NOT BE USED.

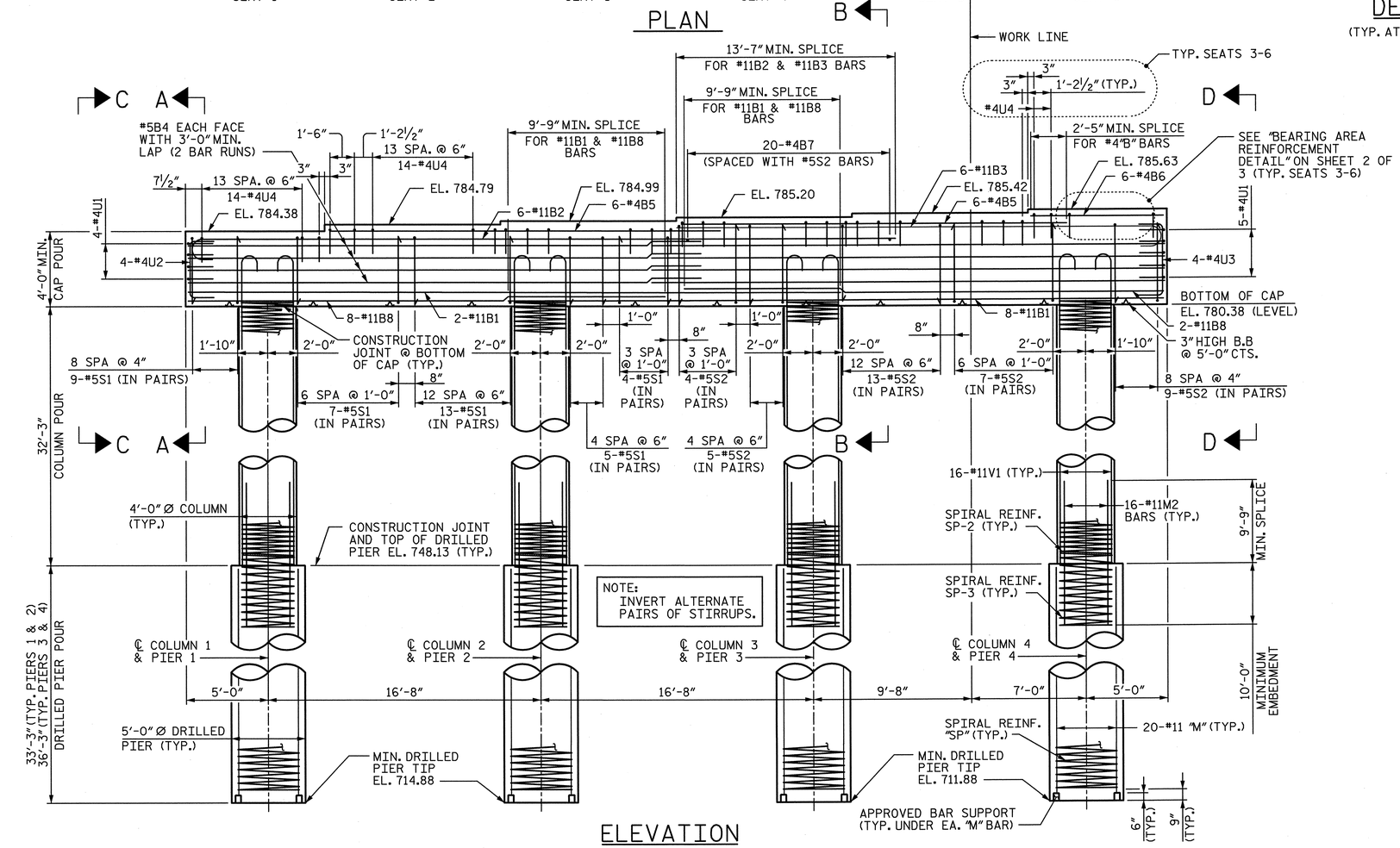

ELEVATION

NOTE:
SEE TABLE A SHEET 3 FOR COLUMN & DRILLED PIER REINFORCING.

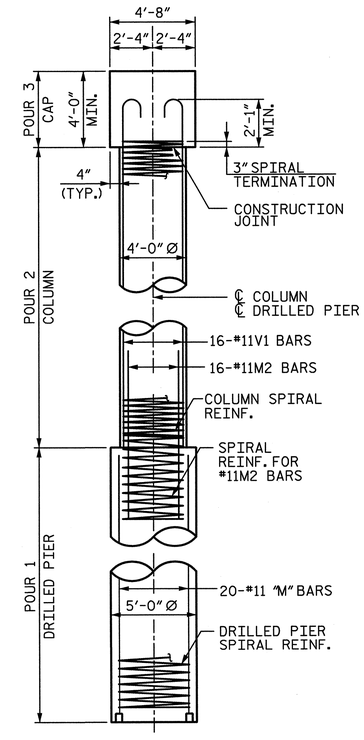

SIDE VIEW

NORTH CAROLINA PROFESSIONAL SEAL 28479 ENGINEER KEVIN G. BAILEY 5-30-13

PROJECT NO. U-2524C

GUILFORD COUNTY

STATION: POT 407+73.35 -L-
= POT 29+32.06 -Y4-

SHEET 1 OF 3

STATE OF NORTH CAROLINA
DEPARTMENT OF TRANSPORTATION
RALEIGH

SUBSTRUCTURE
BENT 16
PLAN & ELEVATION

-LEFT LANE-

REVISIONS						SHEET NO.
NO.	BY:	DATE:	NO.	BY:	DATE:	S-211
1			3			TOTAL SHEETS
2			4			836

STV / Ralph Whitehead Associates, Inc.
1000 West Morehead St. Ste. 200
Charlotte, NC 28208
NC License No. F-0991

DRAWN BY : KDH	DATE : 11-12	DESIGN ENGINEER OF RECORD: K. BAILEY	DATE : 5-13
CHECKED BY : JAN	DATE : 12-12		

5/30/2013 5:03:09 PM R:\ustation\Finals\Bent 16 - 1of 3.dgn

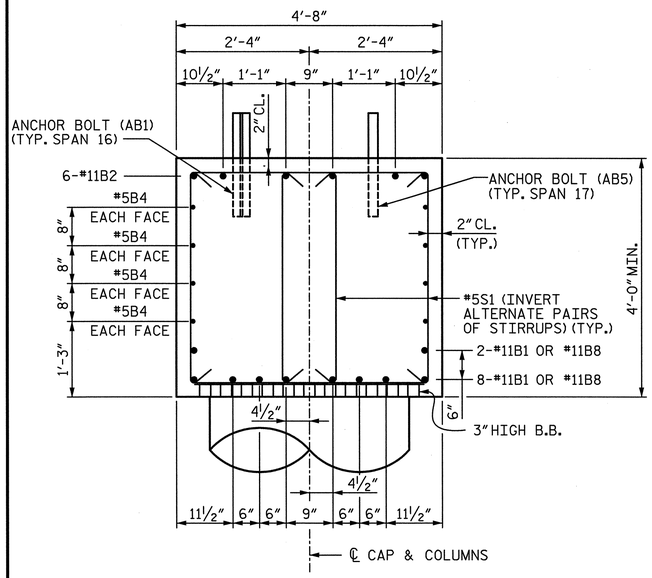

SECTION A-A

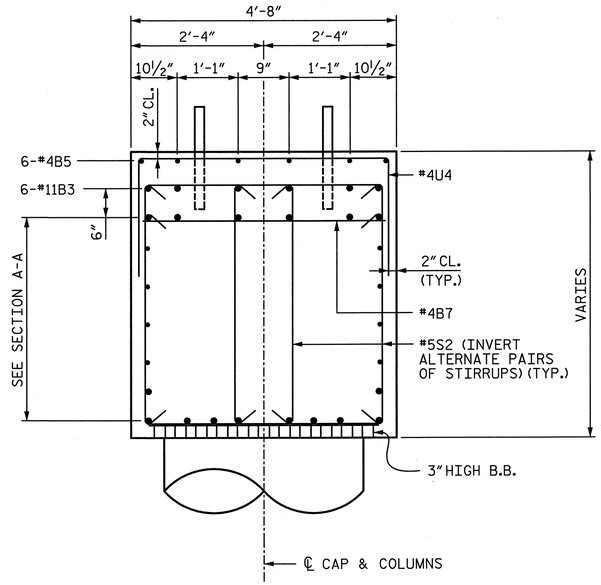

SECTION B-B

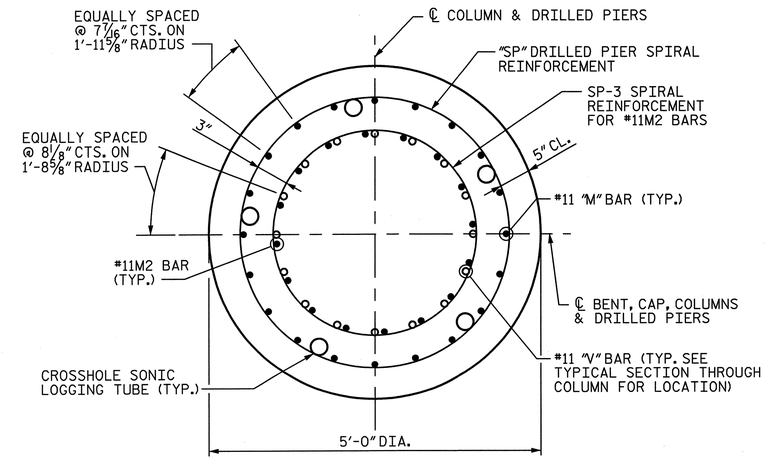

TYPICAL SECTION
THROUGH DRILLED PIER

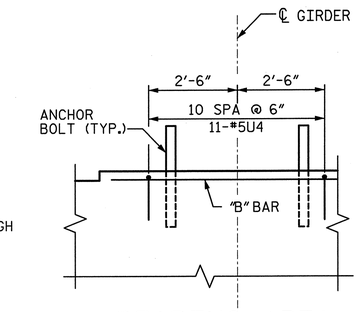

BEARING AREA
REINFORCEMENT DETAIL
(TYP. AT BRIDGE SEATS 3-6)

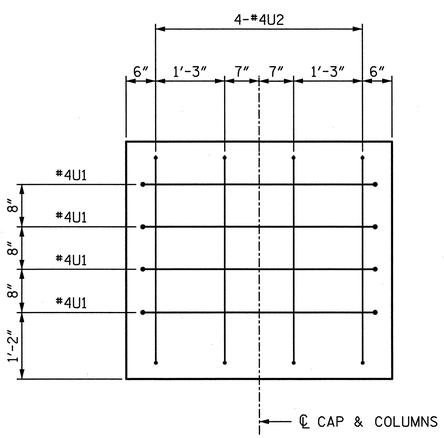

END VIEW C-C

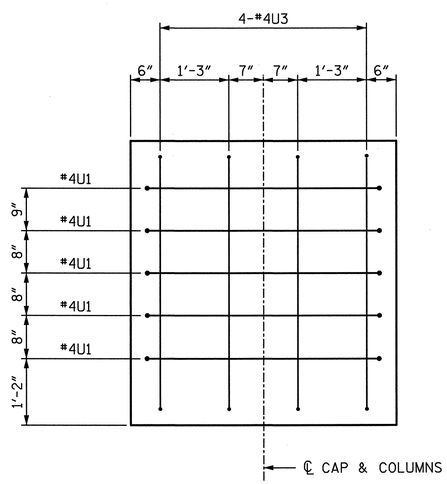

END VIEW D-D

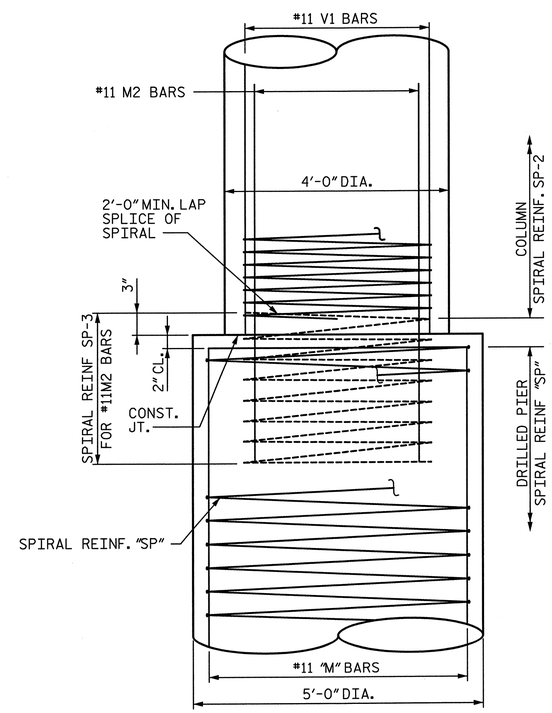

CONSTRUCTION JOINT
DETAIL

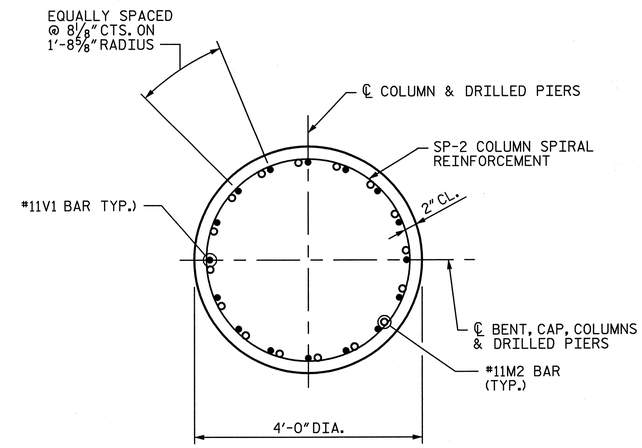

TYPICAL SECTION
THROUGH COLUMN

PROJECT NO. U-2524C
GUILFORD COUNTY
STATION: POT 407+73.35 -L-
= POT 29+32.06 -Y4-

SHEET 2 OF 3

STATE OF NORTH CAROLINA
DEPARTMENT OF TRANSPORTATION
RALEIGH

SUBSTRUCTURE
BENT 16
DETAILS

-LEFT LANE-

NORTH CAROLINA PROFESSIONAL SEAL 28479 ENGINEER KEVIN G. BAILEY
5-30-13

DRAWN BY : KDH	DATE : 9-12	DESIGN ENGINEER OF RECORD: K. BAILEY	DATE : 5-13
CHECKED BY : JAN	DATE : 12-12		

STV / Ralph Whitehead Associates, Inc.
1000 West Morehead St., Ste. 200
Charlotte, NC 28208
NC License No. F-0991

REVISIONS						SHEET NO.
NO.	BY:	DATE:	NO.	BY:	DATE:	S-212
1			3			TOTAL SHEETS
2			4			836

5/30/2013 5:03:14 PM R:\ustation\Finals\Bent 16 - 2 of 3.dgn

TABLE A

BENT 16 COLUMNS & DRILLED PIERS REINFORCING BILL OF MATERIAL

COLUMN/ DRILLED PIER	BAR	NO.	SIZE	TYPE	●	LENGTH	WEIGHT	DRILLED PIER LENGTH
1 & 2 (1 SHOWN, 2 REQ'D)	M11	20	#11	STR.		35'-7"	3,781	33'-3"
	M2	16	#11	STR.		19'-9"	1,679	
	V1	16	#11	1		37'-1"	3,152	
	SP-11	1	✱✱	4	32'-4"	1,042'-7"	1,088	
	SP-2	1	✱	5	32'-6"	1,500'-0"	1,002	
	SP-3	1	✱✱	4	10'-3"	298'-7"	311	
3 & 4 (1 SHOWN, 2 REQ'D)	M12	20	#11	STR.		38'-7"	4,100	36'-3"
	M2	16	#11	STR.		19'-9"	1,679	
	V1	16	#11	1		37'-1"	3,152	
	SP-12	1	✱✱	4	35'-4"	1,135-9"	1,185	
	SP-2	1	✱	5	32'-6"	1,500'-0"	1,002	
	SP-3	1	✱✱	4	10'-3"	298'-7"	311	

THE CONTRACTOR'S ATTENTION IS CALLED TO THE FACT THAT THE LONGITUDINAL REINFORCEMENT FOR THE DRILLED PIERS IS DETAILED WITH 3 FEET OF EXTRA LENGTH.

✱✱ THE SP-11, SP-12 AND SP-3 SPIRAL REINFORCING STEEL SHALL BE W31 OR D-31 COLD DRAWN WIRE OR #5 PLAIN OR DEFORMED BAR WITH A 5" PITCH.

✱ THE SP-2 SPIRAL REINFORCING SHALL BE W20 OR D-20 COLD DRAWN WIRE OR #4 PLAIN OR DEFORMED BAR WITH A 3" PITCH.

QUANTITIES

REINFORCING STEEL	LBS.	44,336
SPIRAL REINFORCING STEEL	LBS.	9,798
CLASS A CONCRETE : POUR 2 - COLUMNS	CU. YDS.	60.0
POUR 3 - CAP	CU. YDS.	48.7
TOTAL	CU. YDS.	108.7
5'-0" Ø DRILLED PIERS IN SOIL	L.F.	104
5'-0" Ø DRILLED PIERS NOT IN SOIL	L.F.	35
TOTAL 5'-0" Ø DRILLED PIERS	L.F.	139
DRILLED PIER CONCRETE : POUR 1	CU. YDS.	101.1
CSL TUBES	L.F.	725

BAR TYPES

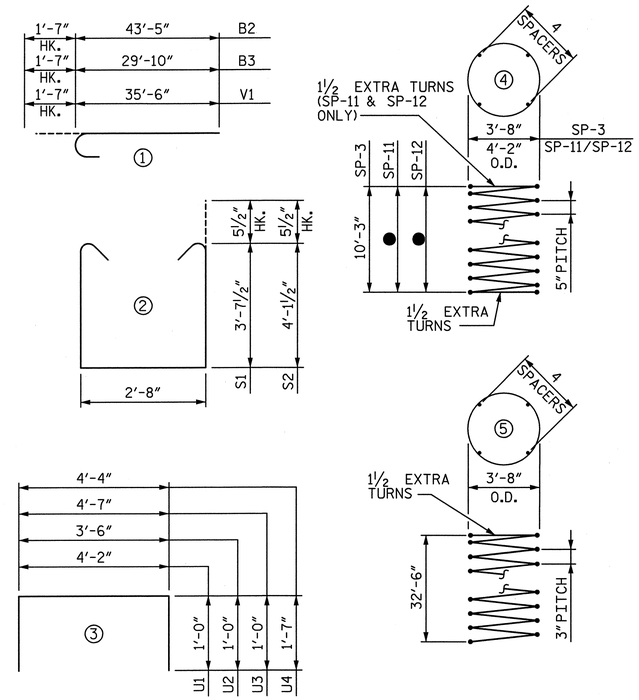

ALL BAR DIMENSIONS ARE OUT TO OUT

BILL OF MATERIAL

BAR	NO.	SIZE	TYPE	LENGTH	WEIGHT
B1	10	#11	STR.	40'-2"	2,134
B2	6	#11	1	45'-0"	1,435
B3	6	#11	1	31'-5"	1,002
B4	16	#5	STR.	31'-4"	523
B5	12	#4	STR.	23'-11"	192
B6	6	#4	STR.	8'-2"	33
B7	20	#4	STR.	4'-4"	58
B8	10	#11	STR.	29'-3"	1,554
S1	76	#5	2	10'-10"	859
S2	76	#5	2	11'-10"	938
U1	9	#4	3	6'-2"	38
U2	4	#4	3	5'-6"	15
U3	4	#4	3	6'-7"	18
U4	90	#4	3	7'-6"	451

NOTE:

FOR ● AND COLUMNS & DRILLED PIERS REINFORCING BILL OF MATERIAL, SEE TABLE A THIS SHEET.

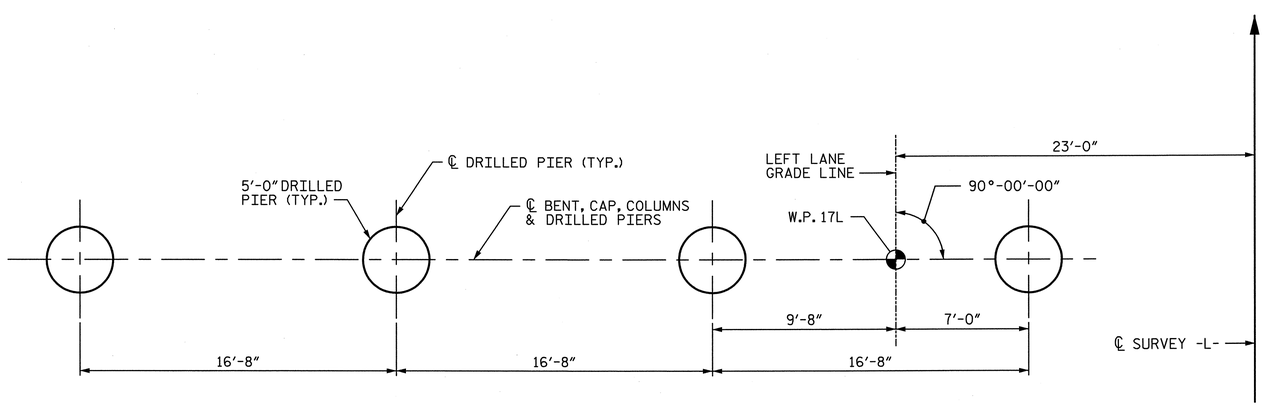

PLAN OF DRILLED PIERS

PROJECT NO. U-2524C

GUILFORD COUNTY

STATION: POT 407+73.35 -L-
= POT 29+32.06 -Y4-

SHEET 3 OF 3

STATE OF NORTH CAROLINA
DEPARTMENT OF TRANSPORTATION
RALEIGH

SUBSTRUCTURE
BENT 16
DETAILS & BILL OF MATERIAL

-LEFT LANE-

NORTH CAROLINA PROFESSIONAL SEAL 28479 ENGINEER KEVIN G. BAILEY
5-30-13

DRAWN BY : KDH	DATE : 9-12	DESIGN ENGINEER OF RECORD: K. BAILEY	DATE : 5-13
CHECKED BY : JAN	DATE : 12-12		

STV / Ralph Whitehead Associates, Inc.
1000 West Morehead St., Ste. 200
Charlotte, NC 28208
NC License No. F-0991

REVISIONS								SHEET NO.
NO.	BY:	DATE:	NO.	BY:	DATE:			S-213
1			3					TOTAL SHEETS
2			4					836

R:\station\Finals\Bent 16 - 3 of 3.dgn 5:03:18 PM 5/30/2013

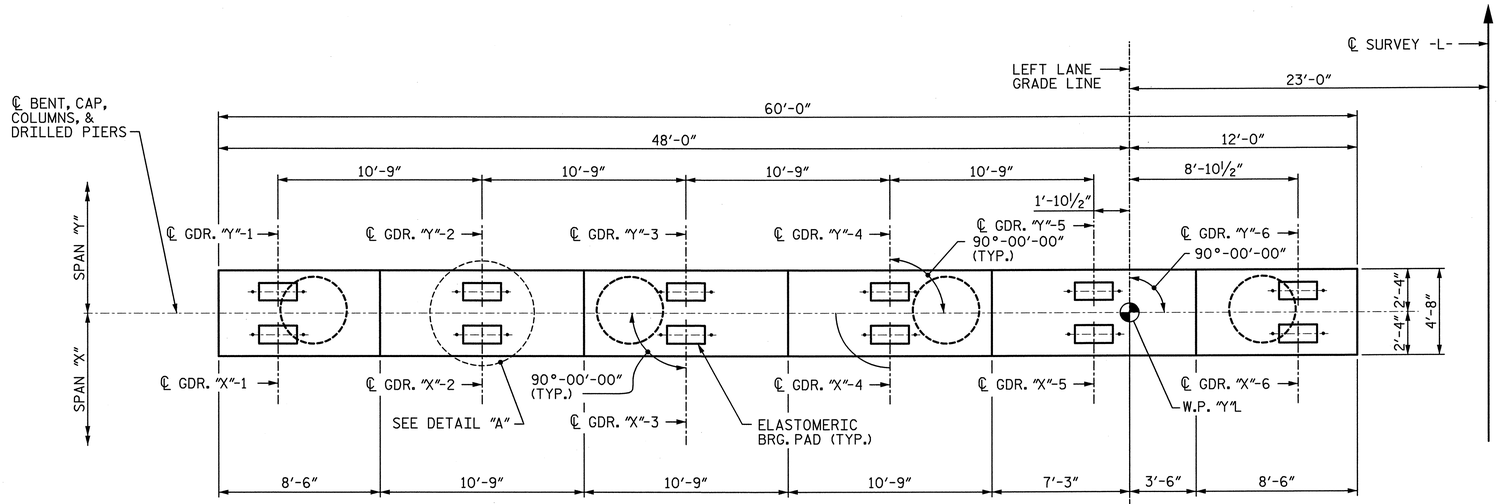

PLAN

NOTES:
SEE TABLE D THIS SHEET FOR "X" AND "Y".

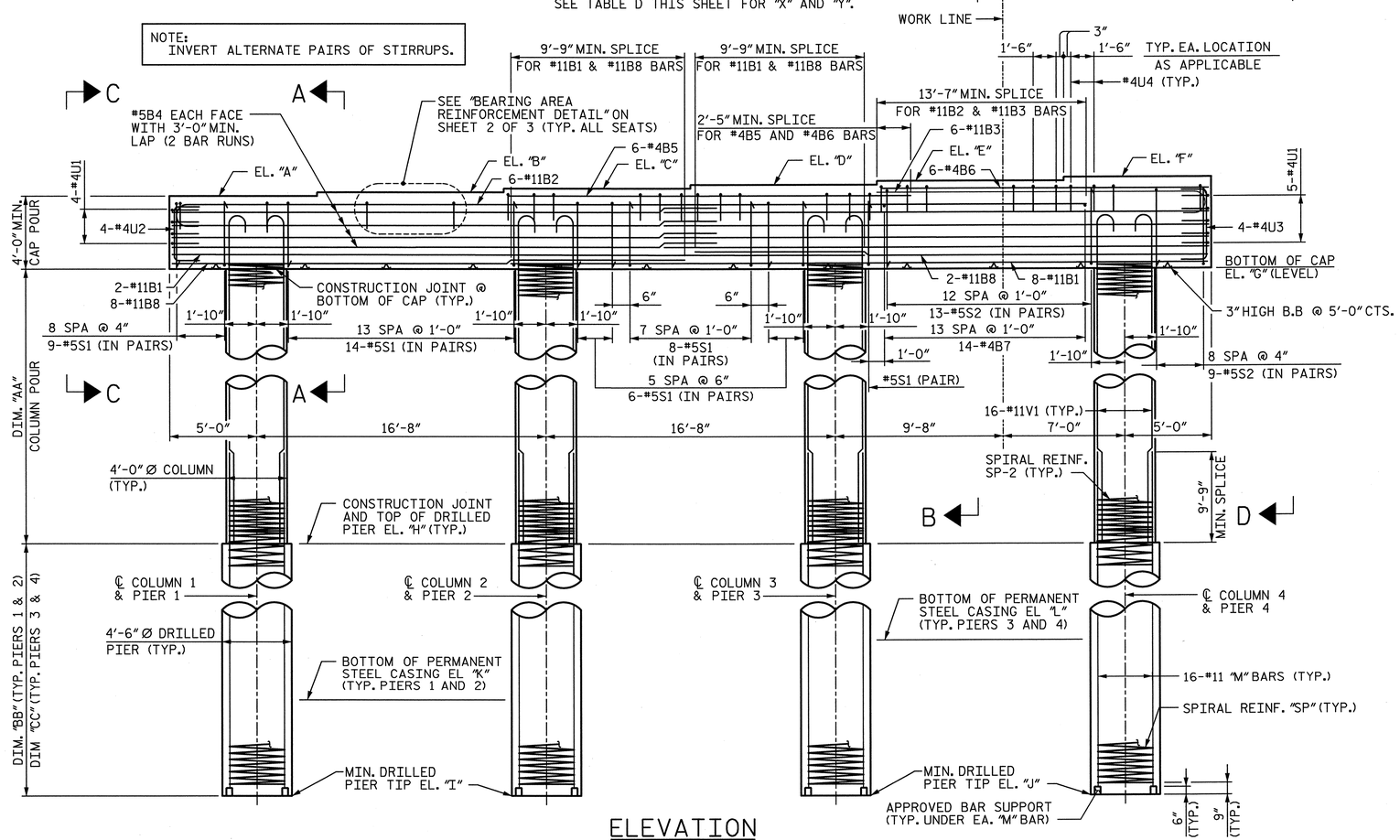

ELEVATION

NOTES:
SEE TABLE B THIS SHEET FOR "A" THRU "L" ELEVATIONS.
SEE TABLE C THIS SHEET FOR "AA" AND "CC" DIMENSIONS.
SEE TABLE A SHEET 3 FOR REINFORCING STEEL IN COLUMNS AND DRILLED PIERS.

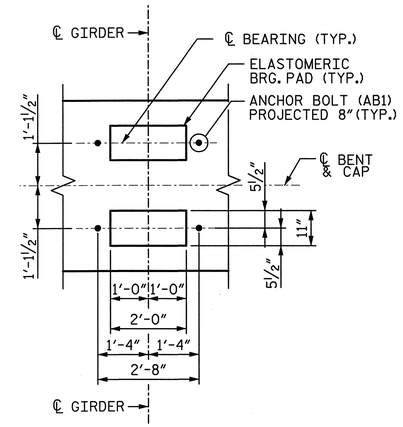

DETAIL "A"

(TYP AT EACH BRIDGE SEAT)

NOTES:

1. ALL REINFORCING STEEL IN THE DRILLED PIERS IS INCLUDED IN THE PAY ITEMS FOR "REINFORCING STEEL" AND "SPIRAL COLUMN REINFORCING STEEL".
2. THE LOCATION OF THE CONSTRUCTION JOINT IN THE DRILLED PIERS IS BASED ON AN APPROXIMATE GROUND LINE ELEVATION. IF THE CONSTRUCTION JOINT IS ABOVE THE ACTUAL GROUND ELEVATION, THE CONTRACTOR SHALL PLACE THE CONSTRUCTION JOINT 1 FOOT BELOW THE GROUND LINE.
3. STIRRUPS AND "U BARS" IN CAP MAY BE SHIFTED SLIGHTLY AS NECESSARY TO CLEAR ANCHOR BOLTS.
4. HOOKS ON BARS MAY BE TURNED AS NECESSARY FOR PLACING REINFORCING STEEL.
5. A CONSTRUCTION JOINT AT MID-HEIGHT OF COLUMN IS PERMITTED.
6. FOR "AB1" ANCHOR BOLTS, SEE "ELASTOMERIC BEARING DETAILS" SHEET.
7. SEE "GENERAL DRAWING GENERAL NOTES" SHEET FOR ADDITIONAL NOTES.
8. SEE SHEET 2 OF 3 FOR SECTIONS CALLED OUT ON ELEVATION VIEW.

TABLE D
PLAN VIEW INFORMATION

	BENT 17	BENT 18	BENT 19
"X"	17	18	19
"Y"	18	19	20

TABLE B
ELEVATIONS

	BENT 17	BENT 18	BENT 19
"A"	784.04	783.44	782.84
"B"	784.25	783.65	783.05
"C"	784.47	783.87	783.27
"D"	784.68	784.08	783.48
"E"	784.90	784.30	783.70
"F"	785.11	784.51	783.91
"G"	780.04	779.44	778.84
"H"	747.87	747.69	747.76
"I"	714.87	714.94	717.76
"J"	714.87	718.94	717.76
"K"	726.00	725.00	730.00
"L"	726.00	730.00	730.00

TABLE C
ELEVATION VIEW DIMENSIONS

	BENT 17	BENT 18	BENT 19
"AA"	32'-2"	31'-9"	31'-1"
"BB"	33'-0"	32'-9"	30'-0"
"CC"	33'-0"	28'-9"	30'-0"

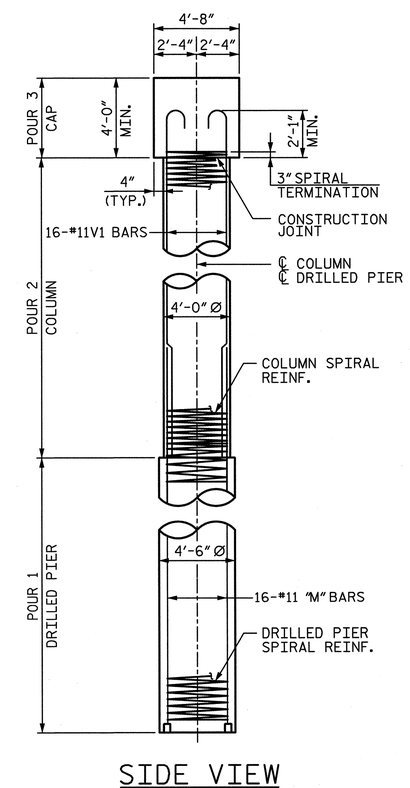

SIDE VIEW

PROJECT NO. U-2524C
GUILFORD COUNTY
STATION: POT 407+73.35 -L-
= POT 29+32.06 -Y4-

SHEET 1 OF 3

STATE OF NORTH CAROLINA
DEPARTMENT OF TRANSPORTATION
RALEIGH

SUBSTRUCTURE
BENTS 17 - 19
PLAN & ELEVATION

-LEFT LANE-

REVISIONS							SHEET NO.
NO.	BY:	DATE:	NO.	BY:	DATE:		S-214
1			3				TOTAL SHEETS
2			4				836

STV / Ralph Whitehead Associates, Inc.
1000 West Morehead St., Ste. 200
Charlotte, NC 28208
NC License No. F-0991

DRAWN BY : KDH DATE : 12-12
CHECKED BY : JAN DATE : 12-12
DESIGN ENGINEER OF RECORD: K. BAILEY DATE : 5-13

5/30/2013 5:03:22 PM R:\ustation\Finals\Bent 17-19 - 1of 3.dgn

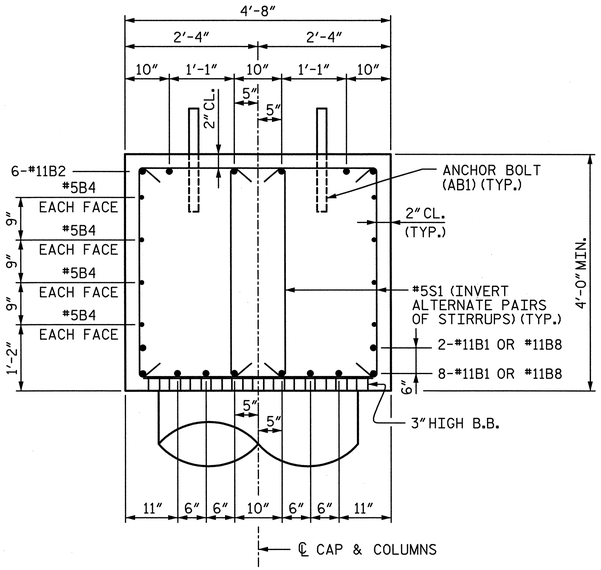

SECTION A-A

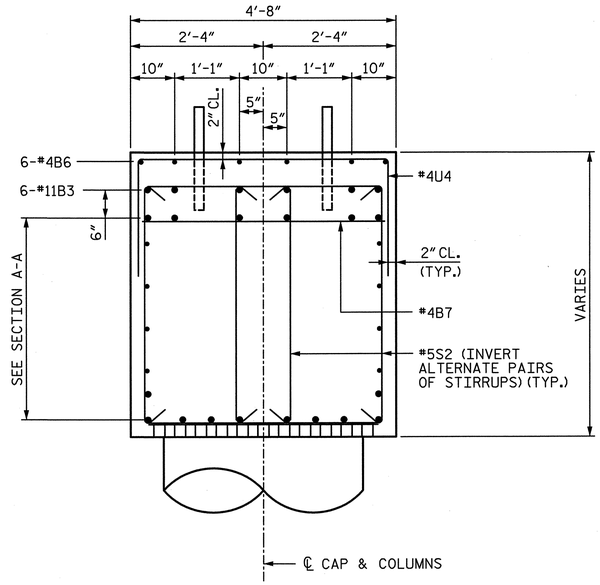

SECTION B-B

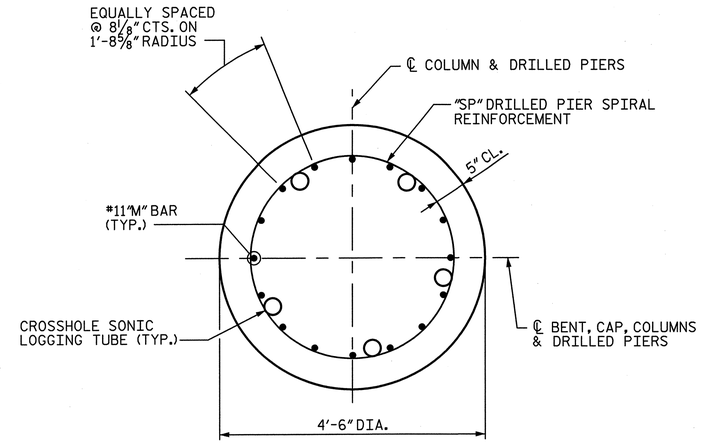

TYPICAL SECTION THROUGH DRILLED PIER

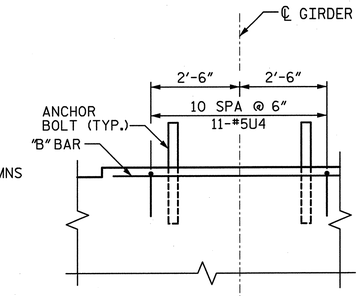

BEARING AREA REINFORCEMENT DETAIL

(TYP AT EACH BRIDGE SEAT)

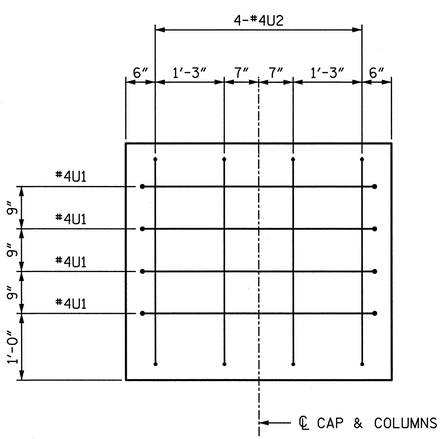

END VIEW C-C

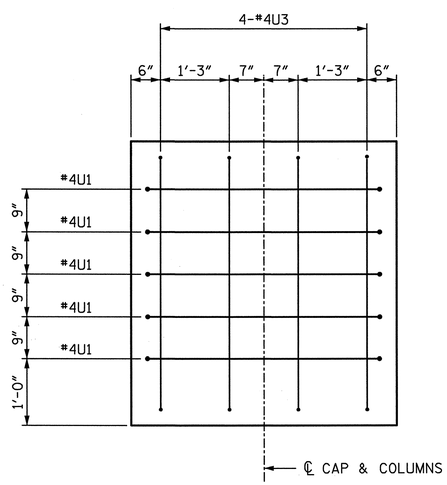

END VIEW D-D

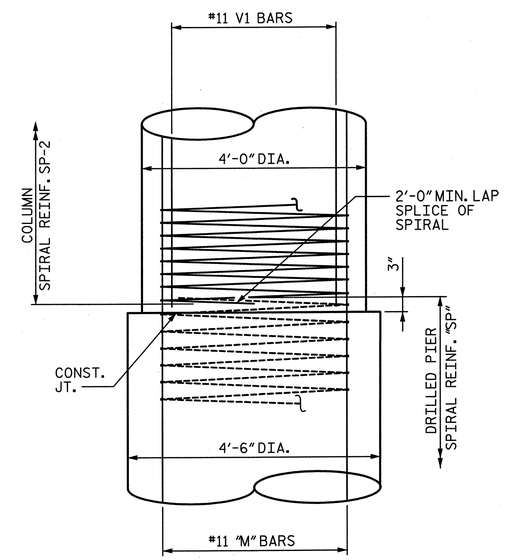

CONSTRUCTION JOINT DETAIL

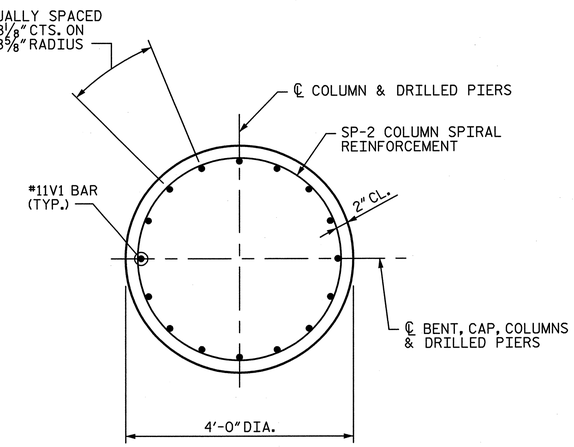

TYPICAL SECTION THROUGH COLUMN

PROJECT NO. U-2524C

GUILFORD COUNTY

STATION: POT 407+73.35 -L-
= POT 29+32.06 -Y4-

SHEET 2 OF 3

NORTH CAROLINA PROFESSIONAL SEAL 28479 ENGINEER KEVIN G. BAILEY 6-7-13

STATE OF NORTH CAROLINA
DEPARTMENT OF TRANSPORTATION
RALEIGH

SUBSTRUCTURE
BENTS 17 - 19
DETAILS

-LEFT LANE-

REVISIONS							
NO.	BY:	DATE:	NO.	BY:	DATE:		
1			3				
2			4				

SHEET NO. S-215

TOTAL SHEETS 036

STV / Ralph Whitehead Associates, Inc.
1000 West Morehead St., Ste. 200
Charlotte, NC 28208
NC License No. F-0991

DRAWN BY : KDH DATE : 12-12
CHECKED BY : JAN DATE : 12-12

DESIGN ENGINEER OF RECORD: K. BAILEY DATE : 5-13

6/7/2013 1:17:11 PM R:\ustation\Finals\Bent 17-19 - 2 of 3.dgn

TABLE A

BENT 17 COLUMNS & DRILLED PIERS REINFORCING BILL OF MATERIAL

COLUMN/ DRILLED PIER	BAR	NO.	SIZE	TYPE	●	LENGTH	WEIGHT	DRILLED PIER LENGTH
1 THRU 4 (1 SHOWN, 4 REQ'D)	M11	16	#11	STR.		42'-3"	3,592	33'-0"
	V1	16	#11	1	35'-5"	37'-0"	3,145	
	SP-11	1	✳✳	4	32'-6"	905'-5"	944	
	SP-2	1	✳	5	32'-5"	1,496'-2"	999	

TABLE A

BENT 18 COLUMNS & DRILLED PIERS REINFORCING BILL OF MATERIAL

COLUMN/ DRILLED PIER	BAR	NO.	SIZE	TYPE	●	LENGTH	WEIGHT	DRILLED PIER LENGTH
1 & 2 (1 SHOWN, 2 REQ'D)	M11	16	#11	STR.		42'-0"	3,570	32'-9"
	V1	16	#11	1	35'-0"	36'-7"	3,110	
	SP-11	1	✳✳	4	32'-3"	898'-7"	937	
	SP-2	1	✳	5	32'-0"	1477'-2"	987	
3 & 4 (1 SHOWN, 2 REQ'D)	M12	16	#11	STR.		38'-0"	3,230	28'-9"
	V1	16	#11	1	35'-0"	36'-7"	3,110	
	SP-12	1	✳✳	4	28'-3"	789'-6"	823	
	SP-2	1	✳	5	32'-0"	1477'-2"	987	

TABLE A

BENT 19 COLUMNS & DRILLED PIERS REINFORCING BILL OF MATERIAL

COLUMN/ DRILLED PIER	BAR	NO.	SIZE	TYPE	●	LENGTH	WEIGHT	DRILLED PIER LENGTH
1 THRU 4 (1 SHOWN, 4 REQ'D)	M11	16	#11	STR.		39'-3"	3,337	30'-0"
	V1	16	#11	1	34'-4"	35'-11"	3,053	
	SP-11	1	✳✳	4	29'-6"	823'-7"	859	
	SP-2	1	✳	5	31'-4"	1,446'-10"	966	

✳✳ THE SP-11 AND SP-12 SPIRAL REINFORCING STEEL SHALL BE W31 OR D-31 COLD DRAWN WIRE OR #5 PLAIN OR DEFORMED BAR WITH A 5"PITCH.

✳ THE SP-2 SPIRAL REINFORCING SHALL BE W20 OR D-20 COLD DRAWN WIRE OR #4 PLAIN OR DEFORMED BAR WITH A 3"PITCH.

BAR TYPES

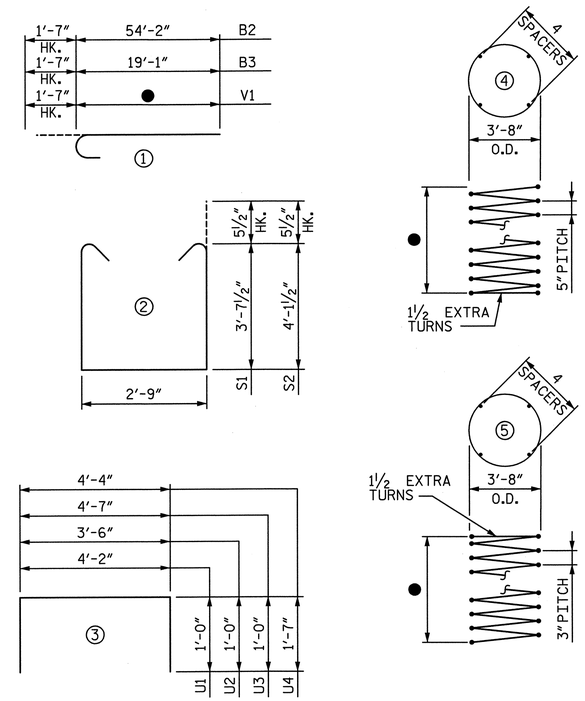

ALL BAR DIMENSIONS ARE OUT TO OUT

CAP REINFORCING BILL OF MATERIAL FOR ONE BENT (3 REQUIRED)

BAR	NO.	SIZE	TYPE	LENGTH	WEIGHT
B1	10	#11	STR.	40'-2"	2,134
B2	6	#11	1	55'-9"	1,777
B3	6	#11	1	20'-8"	659
B4	16	#5	STR.	31'-4"	523
B5	6	#4	STR.	23'-11"	96
B6	6	#4	STR.	18'-11"	76
B7	14	#4	STR.	4'-4"	41
B8	10	#11	STR.	29'-3"	1,554
S1	88	#5	2	10'-11"	1,002
S2	44	#5	2	11'-11"	547
U1	9	#4	3	6'-2"	38
U2	4	#4	3	5'-6"	15
U3	4	#4	3	6'-7"	18
U4	86	#4	3	7'-6"	431

NOTE:
FOR ● AND COLUMNS & DRILLED PIER S REINFORCING BILL OF MATERIAL, SEE TABLE A THIS SHEET.

QUANTITIES

			BENT 17	BENT 18	BENT 19
REINFORCING STEEL		LBS.	35,859	34,951	34,471
SPIRAL REINFORCING STEEL		LBS.	7,772	7,468	7,300
CLASS A CONCRETE :	POUR 2 - COLUMNS	CU. YDS.	59.9	59.1	57.9
	POUR 3 - CAP	CU. YDS.	47.1	47.1	47.1
	TOTAL	CU. YDS.	107.0	106.2	105.0
4'-6"Ø DRILLED PIERS IN SOIL		L.F.	101	79	81
4'-6"Ø DRILLED PIERS NOT IN SOIL		L.F.	31	44	39
TOTAL 4'-6"Ø DRILLED PIERS		L.F.	132	123	120
PERMANENT STEEL CASING FOR 4'-6"Ø DRILLED PIERS		L.F.	92	85	76
DRILLED PIER CONCRETE :	POUR 1	CU. YDS.	77.8	72.5	70.7
CSL TUBES		L.F.	690	645	630

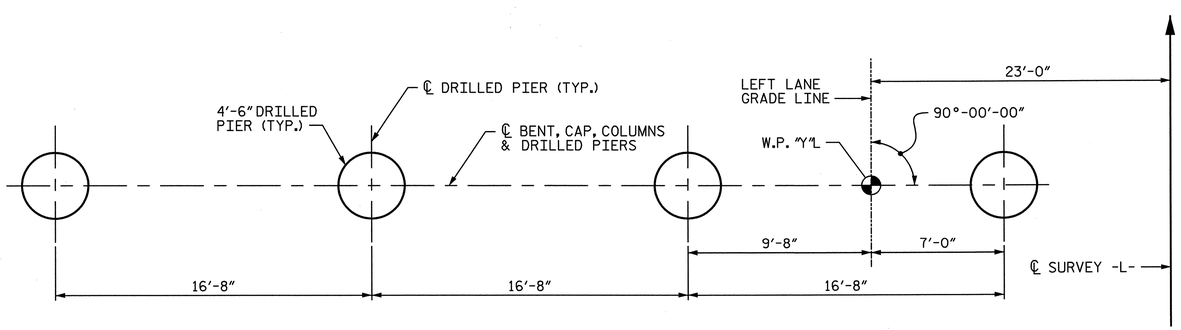

PLAN OF DRILLED PIERS

NOTE:
SEE TABLE "D" SHEET 1 FOR "Y"

PROJECT NO. U-2524C
GUILFORD COUNTY
STATION: POT 407+73.35 -L-
= POT 29+32.06 -Y4-

SHEET 3 OF 3

NORTH CAROLINA PROFESSIONAL SEAL 28479 ENGINEER KEVIN G. BAILEY 6-7-13

STATE OF NORTH CAROLINA
DEPARTMENT OF TRANSPORTATION
RALEIGH

SUBSTRUCTURE
BENTS 17 - 19
DETAILS & BILL OF MATERIAL

-LEFT LANE-

STV / Ralph Whitehead Associates, Inc.
1000 West Morehead St., Ste. 200
Charlotte, NC 28208
NC License No. F-0991

REVISIONS						SHEET NO.
NO.	BY:	DATE:	NO.	BY:	DATE:	S-216
1			3			TOTAL SHEETS
2			4			836

DRAWN BY : KDH DATE : 12-12
CHECKED BY : JAN DATE : 12-12
DESIGN ENGINEER OF RECORD: K. BAILEY DATE : 5-13

6/7/2013 10:34:20 AM R:\ustation\Finals\Bent 17-19 - 3 of 3.dgn

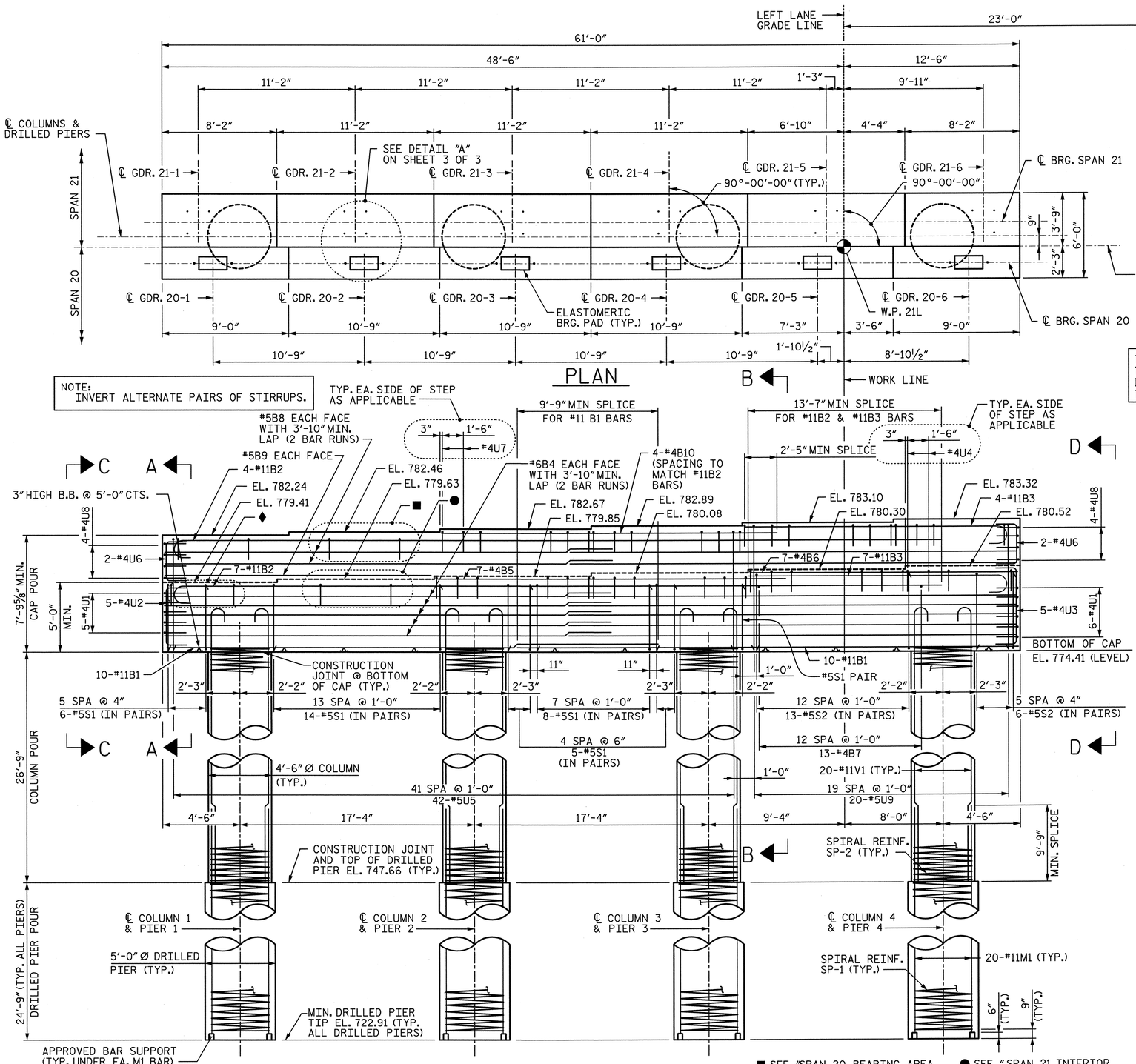

THE CONTRACTOR'S ATTENTION IS CALLED TO THE FACT THAT THE CENTERLINE JOINT IN THE DECK SLAB (CONTROL LINE) IS OFFSET FROM THE CENTERLINE BENT.

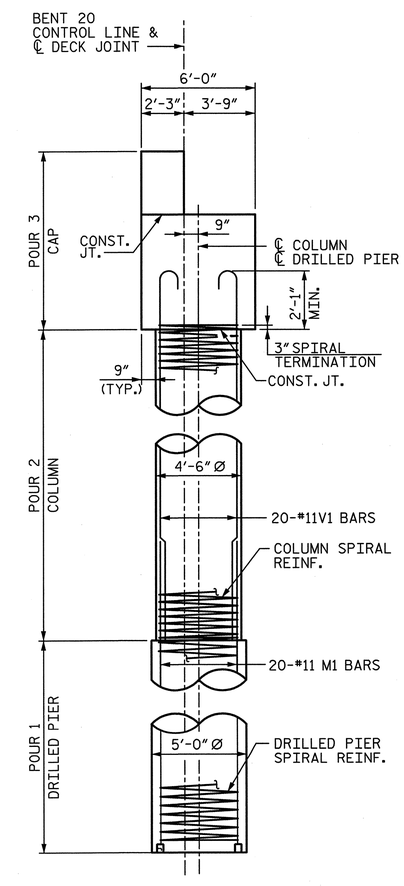

■ SEE "SPAN 20 BEARING AREA REINFORCEMENT DETAIL" ON SHEET 3 OF 3 (TYP. ALL SPAN 20 SEATS)

● SEE "SPAN 21 INTERIOR BEARING AREA REINFORCEMENT DETAIL" ON SHEET 3 OF 3 (TYP. ALL INTERIOR SPAN 21 SEATS)

♦ SEE "SPAN 21 EXTERIOR BEARING AREA REINFORCEMENT DETAIL" ON SHEET 3 OF 3 (TYP. ALL EXTERIOR SPAN 21 SEATS)

NOTES:

1. ALL REINFORCING STEEL IN THE DRILLED PIERS IS INCLUDED IN THE PAY ITEMS FOR "REINFORCING STEEL" AND "SPIRAL COLUMN REINFORCING STEEL".
2. THE LOCATION OF THE CONSTRUCTION JOINT IN THE DRILLED PIERS IS BASED ON AN APPROXIMATE GROUND LINE ELEVATION. IF THE CONSTRUCTION JOINT IS ABOVE THE ACTUAL GROUND ELEVATION, THE CONTRACTOR SHALL PLACE THE CONSTRUCTION JOINT 1 FOOT BELOW THE GROUND LINE.
3. STIRRUPS AND "U BARS" IN CAP MAY BE SHIFTED SLIGHTLY AS NECESSARY TO CLEAR ANCHOR BOLTS.
4. HOOKS ON BARS MAY BE TURNED AS NECESSARY FOR PLACING REINFORCING STEEL.
5. A CONSTRUCTION JOINT AT MID-HEIGHT OF COLUMN IS PERMITTED.
6. FOR 1½" Ø ANCHOR BOLTS, SEE "POT BEARING DETAILS" SHEET.
7. FOR "AB1" ANCHOR BOLTS, SEE "ELASTOMERIC BEARING DETAILS" SHEET.
8. SEE "GENERAL DRAWING GENERAL NOTES" SHEET FOR ADDITIONAL NOTES.
9. SEE SHEET 2 OF 3 FOR SECTIONS CALLED OUT ON ELEVATION VIEW.
10. THE TOP SURFACE AREAS OF THE BENT CAPS SHALL BE CURED IN ACCORDANCE WITH THE STANDARD SPECIFICATIONS EXCEPT THE MEMBRANE CURING COMPOUND METHOD SHALL NOT BE USED.
11. FOR PIPE INSERT DETAILS, SEE "POT BEARING DETAILS" SHEETS.

NORTH CAROLINA PROFESSIONAL SEAL 28479 ENGINEER KEVIN G. BAILEY 5-30-13

PROJECT NO. U-2524C
GUILFORD COUNTY
STATION: POT 407+73.35 -L-
= POT 29+32.06 -Y4-

SHEET 1 OF 3

STATE OF NORTH CAROLINA
DEPARTMENT OF TRANSPORTATION
RALEIGH

SUBSTRUCTURE BENT 20 PLAN & ELEVATION

-LEFT LANE-

REVISIONS								SHEET NO.
NO.	BY:	DATE:	NO.	BY:	DATE:			S-217
1			3					TOTAL SHEETS
2			4					836

STV / Ralph Whitehead Associates, Inc.
1000 West Morehead St. Ste. 200
Charlotte, NC 28208
NC License No. F-0991

DRAWN BY : KDH	DATE : 9-12	DESIGN ENGINEER OF RECORD: K. BAILEY	DATE : 5-13
CHECKED BY : JAN	DATE : 12-12		

5/30/2013 5:03:37 PM R:\ustation\Finals\Bent 20 - 1of 3.dgn

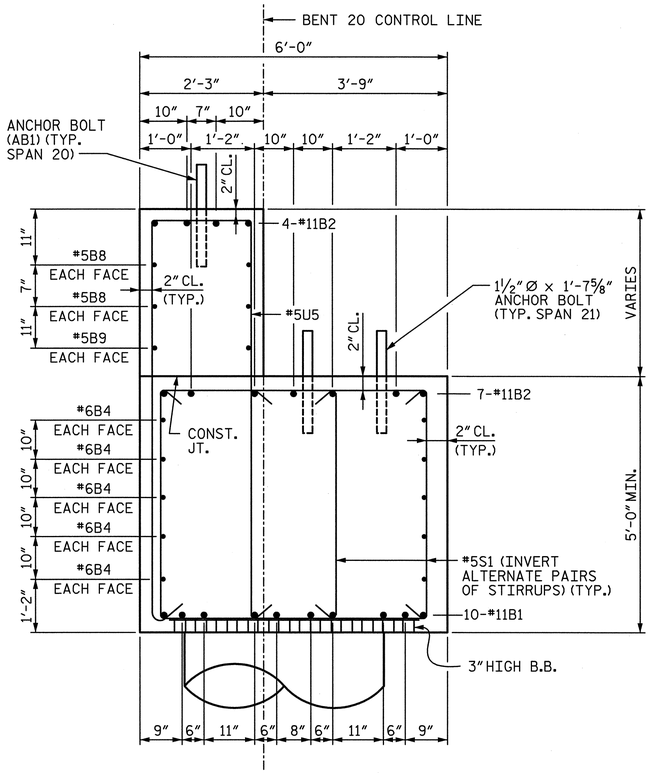

SECTION A-A

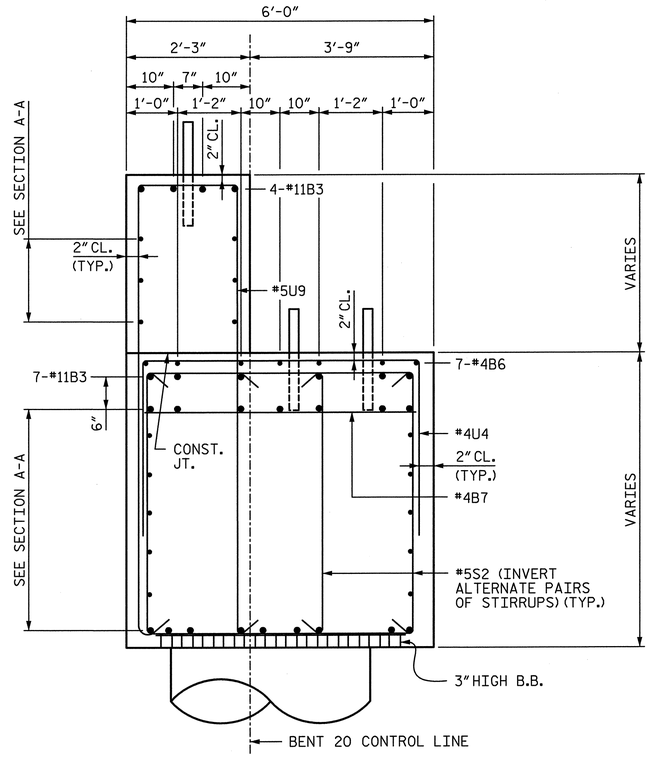

SECTION B-B

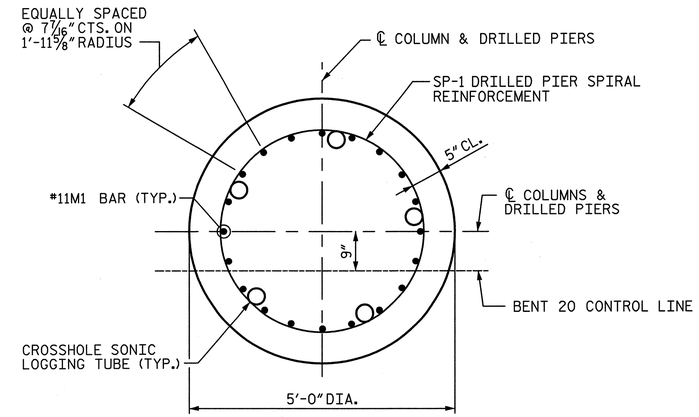

TYPICAL SECTION THROUGH DRILLED PIER

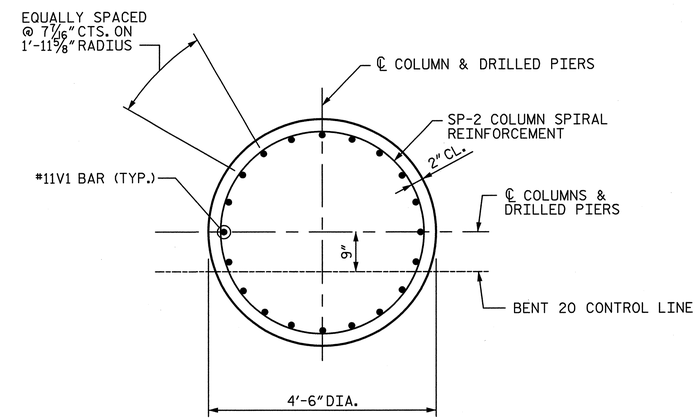

TYPICAL SECTION THROUGH COLUMN

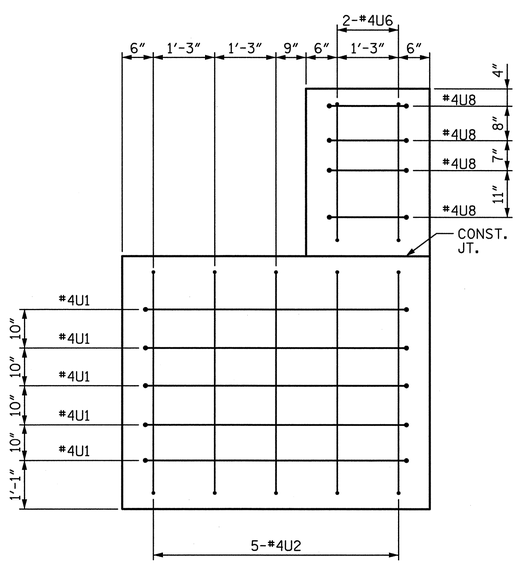

END VIEW C-C

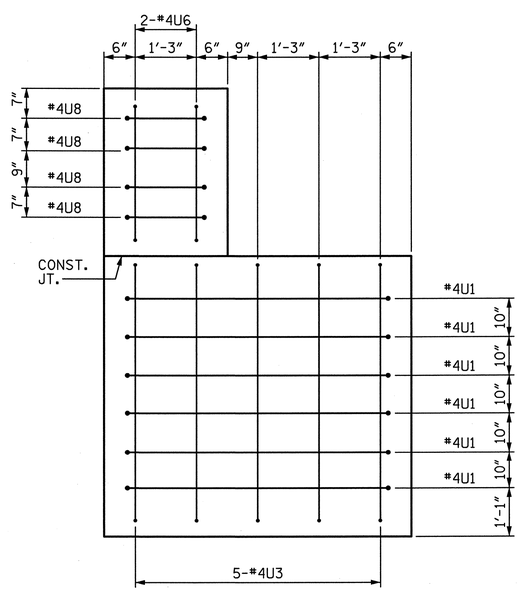

END VIEW D-D

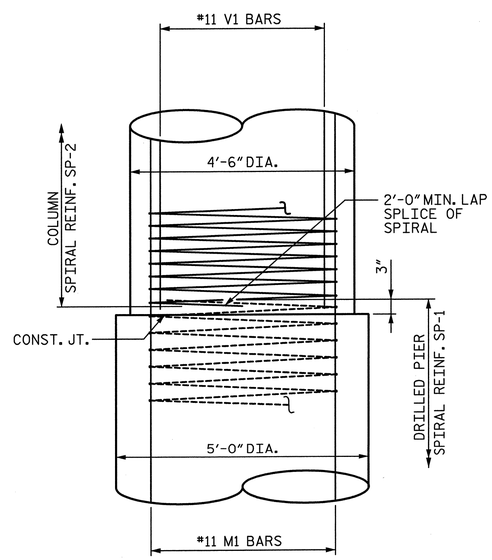

CONSTRUCTION JOINT DETAIL

NORTH CAROLINA PROFESSIONAL SEAL 28479 ENGINEER KEVIN G. BAILEY
5-30-13

PROJECT NO. U-2524C
GUILFORD COUNTY
STATION: POT 407+73.35 -L-
= POT 29+32.06 -Y4-
SHEET 2 OF 3

STATE OF NORTH CAROLINA
DEPARTMENT OF TRANSPORTATION
RALEIGH

SUBSTRUCTURE
BENT 20
DETAILS

-LEFT LANE-

REVISIONS						SHEET NO.
NO.	BY:	DATE:	NO.	BY:	DATE:	S-218
1			3			TOTAL SHEETS
2			4			836

STV/ Ralph Whitehead Associates, Inc.
1000 West Morehead St., Ste. 200
Charlotte, NC 28208
NC License No. F-0991

DRAWN BY : KDH	DATE : 9-12	DESIGN ENGINEER OF RECORD: K. BAILEY	DATE : 5-13
CHECKED BY : JAN	DATE : 12-12		

5/30/2013 5:03:41 PM R:\ustation\Finals\Bent 20 - 2 of 3.dgn

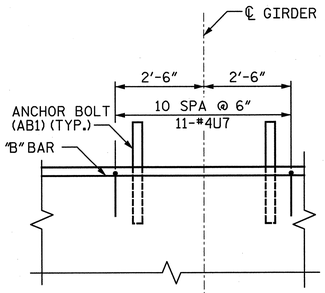

SPAN 20 BEARING AREA REINFORCEMENT DETAIL

(TYP. AT EACH SPAN 20 BRIDGE SEAT)

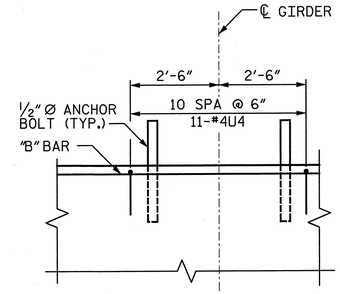

SPAN 21 INTERIOR BEARING AREA REINFORCEMENT DETAIL

(TYP. AT EACH SPAN 21 INTERIOR BRIDGE SEAT)

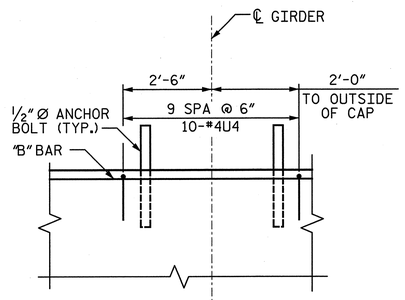

SPAN 21 EXTERIOR BEARING AREA REINFORCEMENT DETAIL

(TYP. AT EACH SPAN 21 EXTERIOR BRIDGE SEAT)

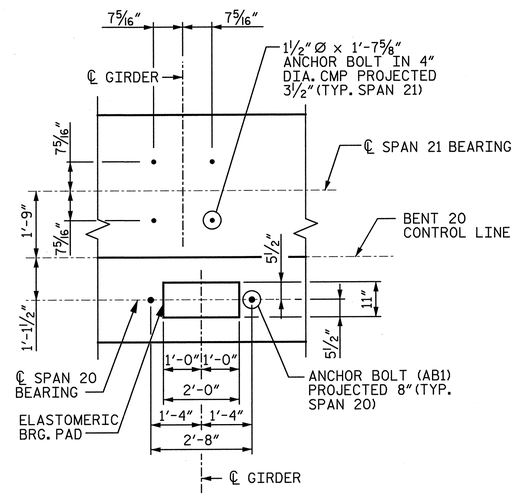

DETAIL "A"

(TYP. EACH BRIDGE SEAT)

BAR TYPES

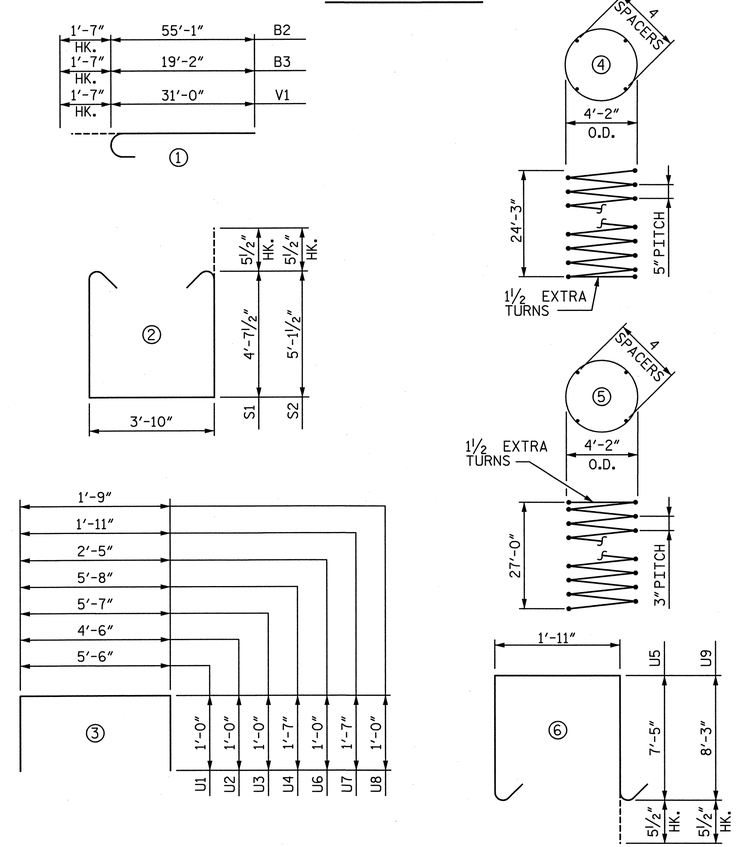

ALL BAR DIMENSIONS ARE OUT TO OUT

BILL OF MATERIAL

BAR	NO.	SIZE	TYPE	LENGTH	WEIGHT
B1	20	#11	STR.	35'-3"	3,746
B2	11	#11	①	56'-8"	3,312
B3	11	#11	①	20'-9"	1,213
B4	20	#6	STR.	32'-3"	969
B5	7	#4	STR.	24'-9"	116
B6	7	#4	STR.	19'-0"	89
B7	13	#4	STR.	5'-8"	49
B8	8	#5	STR.	32'-3"	269
B9	2	#5	STR.	19'-0"	40
B10	4	#4	STR.	23'-11"	64
M1	80	#11	STR.	34'-0"	14,451
S1	78	#5	②	14'-0"	1,139
S2	38	#5	②	15'-0"	595
U1	11	#4	③	7'-6"	56
U2	5	#4	③	6'-6"	22
U3	5	#4	③	7'-7"	26
U4	80	#4	③	8'-10"	472
U5	42	#5	⑥	17'-8"	774
U6	4	#4	③	4'-5"	12
U7	80	#4	③	5'-1"	272
U8	8	#4	③	3'-9"	20
U9	20	#5	⑥	19'-4"	403
V1	80	#11	①	32'-7"	13,849
SP-1	4	✱✱	④	774'-2"	3,230
SP-2	4	✱	⑤	1,421'-4"	3,798

✱✱ THE SP-1 SPIRAL REINFORCING STEEL SHALL BE W31 OR D-31 COLD DRAWN WIRE OR #5 PLAIN OR DEFORMED BAR WITH A 5" PITCH.

✱ THE SP-2 SPIRAL REINFORCING SHALL BE W20 OR D-20 COLD DRAWN WIRE OR #4 PLAIN OR DEFORMED BAR WITH A 3" PITCH.

QUANTITIES

REINFORCING STEEL		LBS.	41,958
SPIRAL REINFORCING STEEL		LBS.	7,028
CLASS A CONCRETE :	POUR 2 - COLUMNS	CU. YDS.	63.0
	POUR 3 - CAP	CU. YDS.	84.7
	TOTAL	CU. YDS.	147.8
5'-0" Ø DRILLED PIERS IN SOIL		L.F.	58
5'-0" Ø DRILLED PIERS NOT IN SOIL		L.F.	41
TOTAL 5'-0" Ø DRILLED PIERS		L.F.	99
DRILLED PIER CONCRETE :	POUR 1	CU. YDS.	72.0
CSL TUBES		L.F.	525

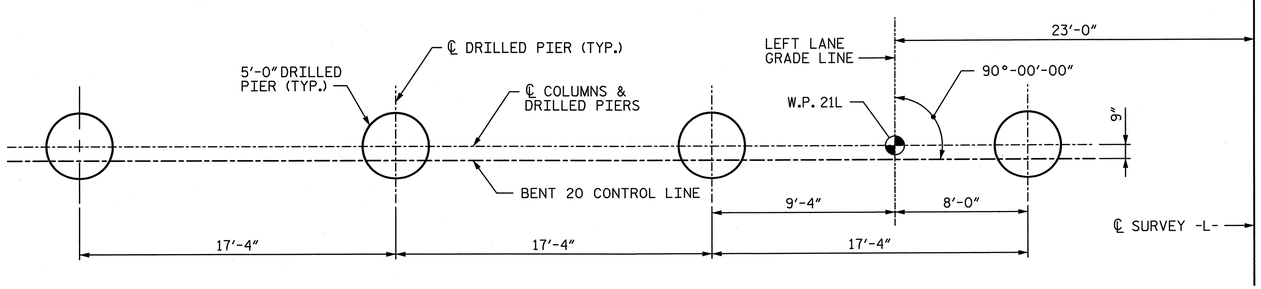

PLAN OF DRILLED PIERS

PROJECT NO. U-2524C

GUILFORD COUNTY

STATION: POT 407+73.35 -L-
= POT 29+32.06 -Y4-

SHEET 3 OF 3

NORTH CAROLINA PROFESSIONAL SEAL 28479 ENGINEER KEVIN G. BAILEY 5-30-13

STATE OF NORTH CAROLINA
DEPARTMENT OF TRANSPORTATION
RALEIGH

SUBSTRUCTURE
BENT 20
DETAILS & BILL OF MATERIAL

-LEFT LANE-

STV / Ralph Whitehead Associates, Inc.
1000 West Morehead St., Ste. 200
Charlotte, NC 28208
NC License No. F-0991

REVISIONS						SHEET NO.
NO.	BY:	DATE:	NO.	BY:	DATE:	S-219
1			3			TOTAL SHEETS
2			4			836

DRAWN BY : KDH	DATE : 9-12	DESIGN ENGINEER OF RECORD: K. BAILEY	DATE : 5-13
CHECKED BY : JAN	DATE : 12-12		

5/30/2013 11:40:45 PM R:\ustation\Finals\Bent 20 - 3 of 3.dgn

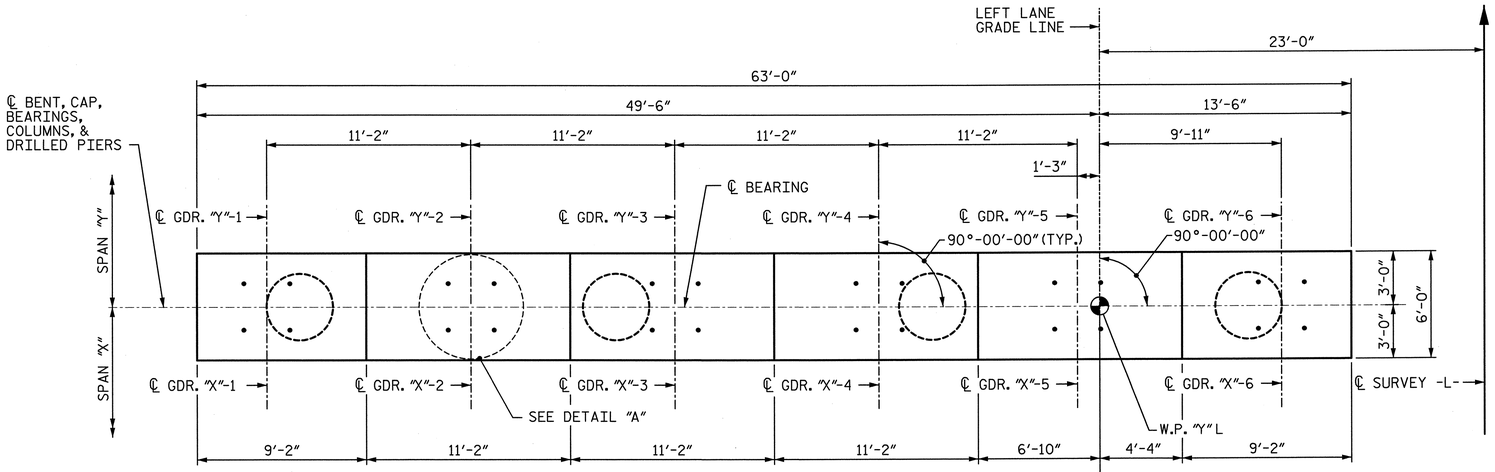

PLAN

NOTE:
SEE TABLE A THIS SHEET FOR "X" AND "Y".

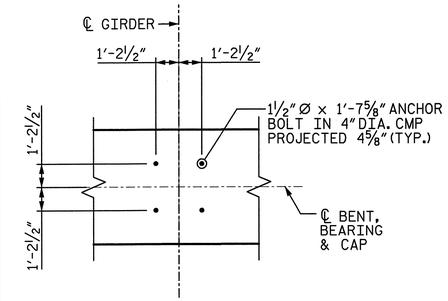

DETAIL "A"

(TYP. AT EACH BRIDGE SEAT)

NOTES:

1. ALL REINFORCING STEEL IN THE DRILLED PIERS IS INCLUDED IN THE PAY ITEMS FOR "REINFORCING STEEL" AND "SPIRAL COLUMN REINFORCING STEEL".
2. THE LOCATION OF THE CONSTRUCTION JOINT IN THE DRILLED PIERS IS BASED ON AN APPROXIMATE GROUND LINE ELEVATION. IF THE CONSTRUCTION JOINT IS ABOVE THE ACTUAL GROUND ELEVATION, THE CONTRACTOR SHALL PLACE THE CONSTRUCTION JOINT 1 FOOT BELOW THE GROUND LINE.
3. STIRRUPS AND "U BARS" IN CAP MAY BE SHIFTED SLIGHTLY AS NECESSARY TO CLEAR ANCHOR BOLTS.
4. HOOKS ON BARS MAY BE TURNED AS NECESSARY FOR PLACING REINFORCING STEEL.
5. A CONSTRUCTION JOINT AT MID-HEIGHT OF COLUMN IS PERMITTED.
6. FOR 1½" Ø ANCHOR BOLTS, SEE "POT BEARING DETAILS" SHEET.
7. SEE "GENERAL DRAWING GENERAL NOTES" SHEET FOR ADDITIONAL NOTES.
8. SEE SHEET 2 OF 3 FOR SECTIONS CALLED OUT ON ELEVATION VIEW.
9. FOR PIPE INSERT DETAILS, SEE "POT BEARING DETAILS" SHEET.

TABLE A PLAN VIEW INFORMATION		
	BENT 21	BENT 22
"X"	21	22
"Y"	22	23

TABLE B ELEVATIONS		
	BENT 21	BENT 22
"A"	777.71	776.34
"B"	777.94	776.56
"C"	778.16	776.79
"D"	778.38	777.01
"E"	778.61	777.23
"F"	778.83	777.46
"G"	772.71	771.34
"H"	747.54	750.00
"I"	716.79	729.00

TABLE C ELEVATION VIEW DIMENSIONS		
	BENT 21	BENT 22
"AA"	25'-2"	21'-4"
"BB"	30'-9"	21'-0"

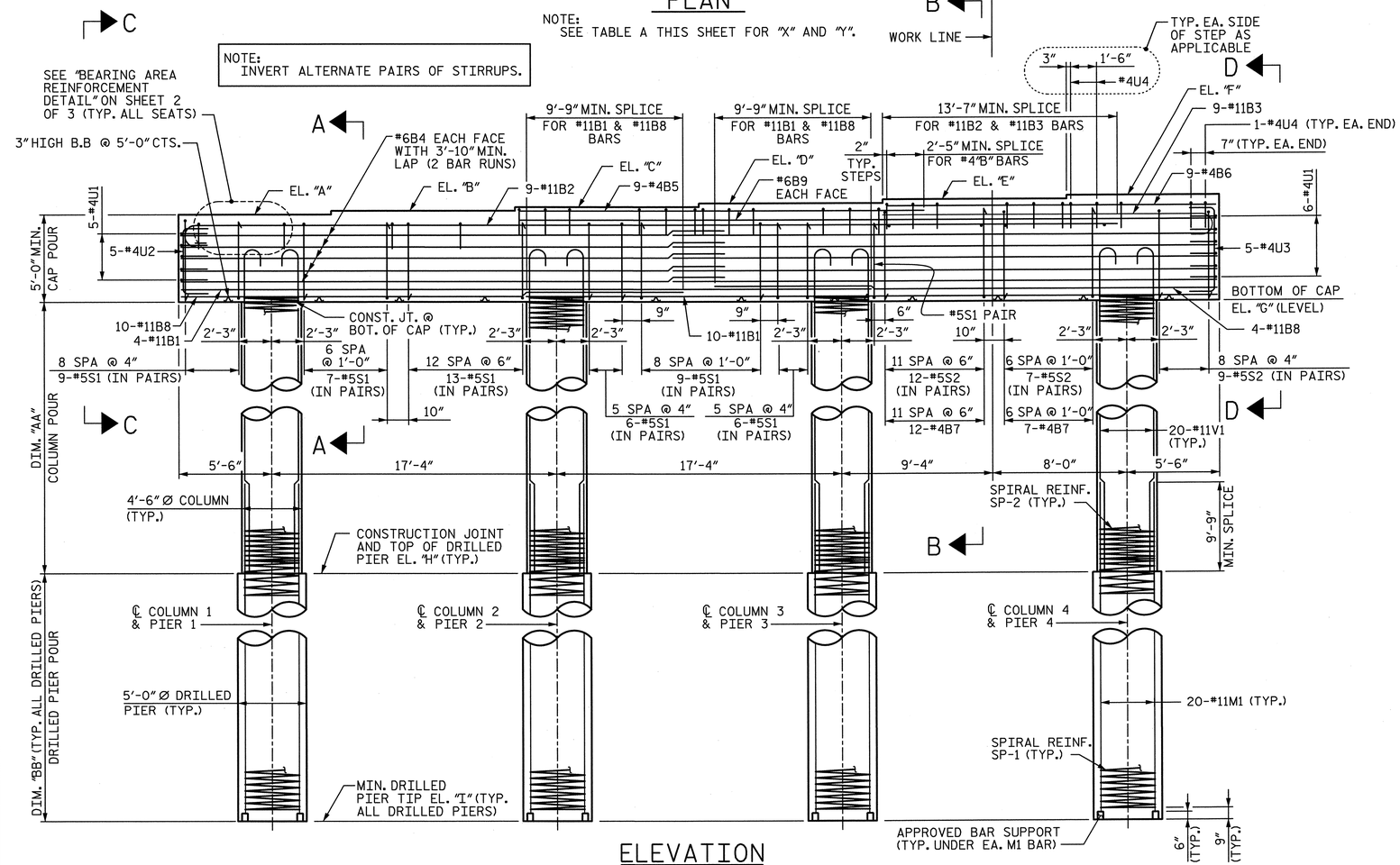

ELEVATION

NOTES:
SEE TABLE B THIS SHEET FOR "A" THRU "I" ELEVATIONS.
SEE TABLE C THIS SHEET FOR "AA" AND "BB" DIMENSIONS.

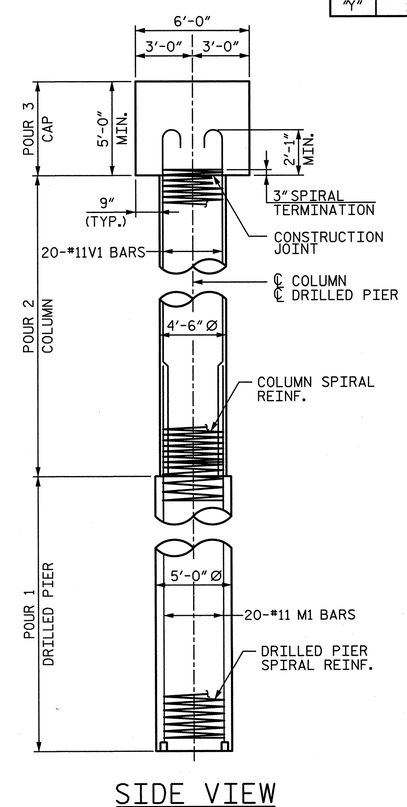

SIDE VIEW

NORTH CAROLINA PROFESSIONAL SEAL 28479 ENGINEER KEVIN G. BAILEY
5-30-13

PROJECT NO. U-2524C
GUILFORD COUNTY
STATION: POT 407+73.35 -L-
= POT 29+32.06 -Y4-

SHEET 1 OF 3

STATE OF NORTH CAROLINA
DEPARTMENT OF TRANSPORTATION
RALEIGH

SUBSTRUCTURE BENTS 21 & 22 PLAN & ELEVATION

-LEFT LANE-

STV / Ralph Whitehead Associates, Inc.
1000 West Morehead St., Ste. 200
Charlotte, NC 28208
NC License No. F-0991

REVISIONS						
NO.	BY:	DATE:	NO.	BY:	DATE:
1			3		
2			4		

SHEET NO. S-220
TOTAL SHEETS 83C

DRAWN BY : KDH	DATE : 9-12	DESIGN ENGINEER OF RECORD: K. BAILEY	DATE : 5-13
CHECKED BY : JAN	DATE : 12-12		

5/30/2013 5:03:51 PM R:\ustation\Finals\Bent 21-22 - 1of 3.dgn

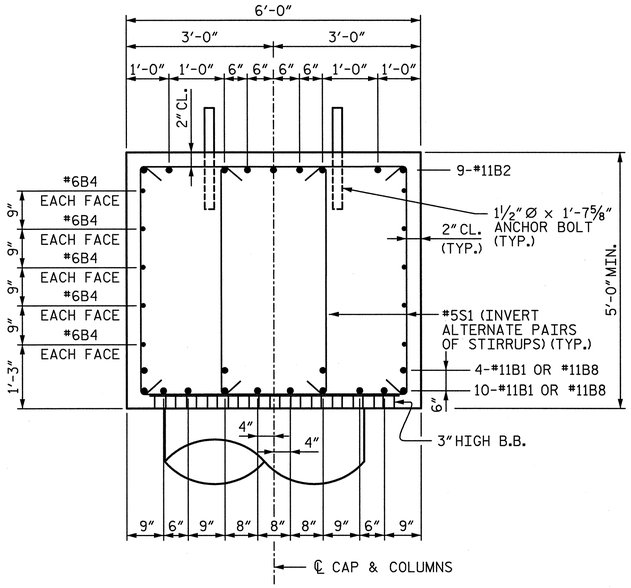

SECTION A-A

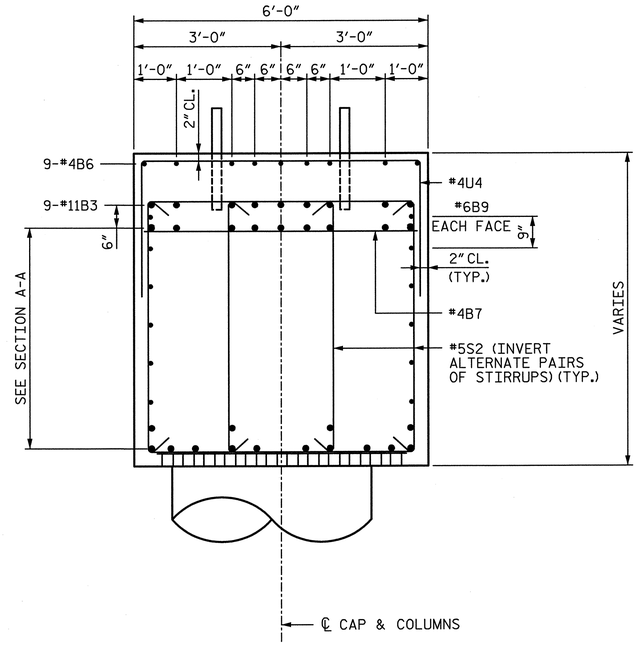

SECTION B-B

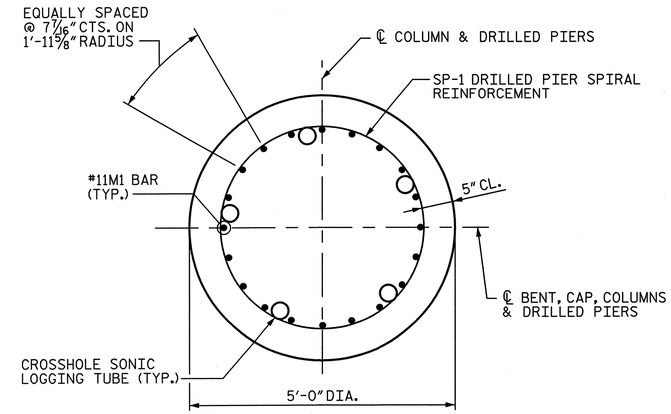

TYPICAL SECTION THROUGH DRILLED PIER

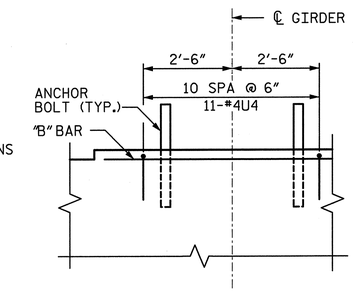

BEARING AREA REINFORCEMENT DETAIL

(TYP AT EACH BRIDGE SEAT)

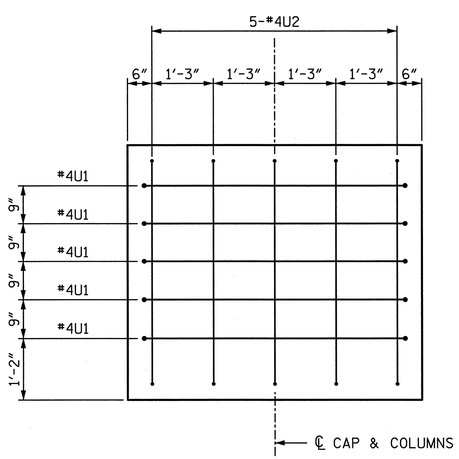

END VIEW C-C

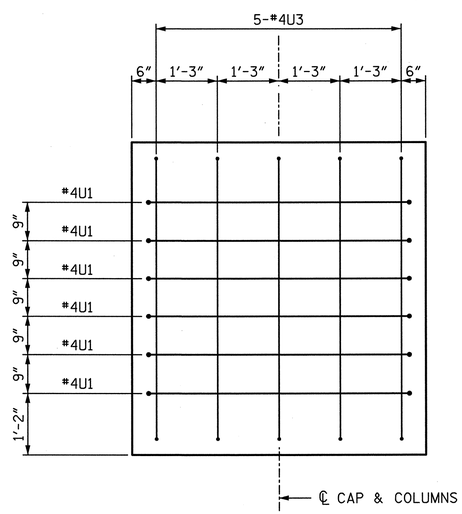

END VIEW D-D

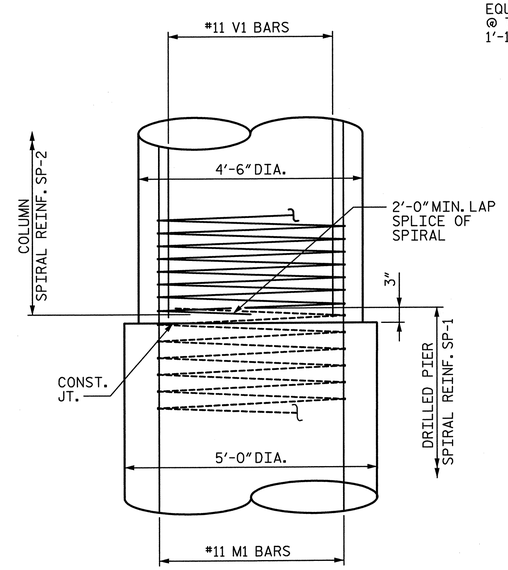

CONSTRUCTION JOINT DETAIL

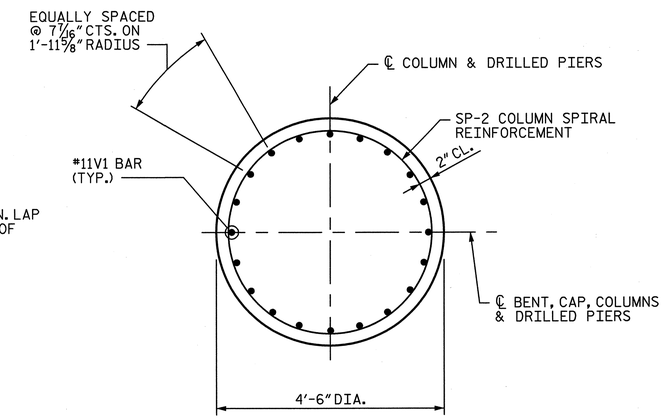

TYPICAL SECTION THROUGH COLUMN

PROJECT NO. U-2524C

GUILFORD COUNTY

STATION: POT 407+73.35 -L-
= POT 29+32.06 -Y4-

SHEET 2 OF 3

STATE OF NORTH CAROLINA
DEPARTMENT OF TRANSPORTATION
RALEIGH

SUBSTRUCTURE
BENTS 21 & 22
DETAILS

-LEFT LANE-

NORTH CAROLINA PROFESSIONAL SEAL 28479 ENGINEER KEVIN G. BAILEY
5-30-13

REVISIONS							SHEET NO.
NO.	BY:	DATE:	NO.	BY:	DATE:		S-221
1			3				TOTAL SHEETS
2			4				836

STV / Ralph Whitehead Associates, Inc.
1000 West Morehead St., Ste. 200
Charlotte, NC 28208
NC License No. F-0991

DRAWN BY : KDH	DATE : 9-12	DESIGN ENGINEER OF RECORD: K. BAILEY	DATE : 5-13
CHECKED BY : JAN	DATE : 12-12		

5/30/2013 5:03:57 PM R:\station\Finals\Bent 21-22 - 2 of 3.dgn

QUANTITIES

		BENT 21	BENT 22
REINFORCING STEEL	LBS.	43,817	38,043
SPIRAL REINFORCING STEEL	LBS.	7,585	5,791
CLASS A CONCRETE : POUR 2 - COLUMNS	CU. YDS.	59.3	50.3
POUR 3 - CAP	CU. YDS.	77.8	77.8
TOTAL	CU. YDS.	137.1	128.1
5'-0"Ø DRILLED PIERS IN SOIL	L.F.	79	40
5'-0"Ø DRILLED PIERS NOT IN SOIL	L.F.	44	44
TOTAL 5'-0"Ø DRILLED PIERS	L.F.	123	84
DRILLED PIER CONCRETE : POUR 1	CU. YDS.	89.4	61.1
CSL TUBES	L.F.	645	450

BAR TYPES

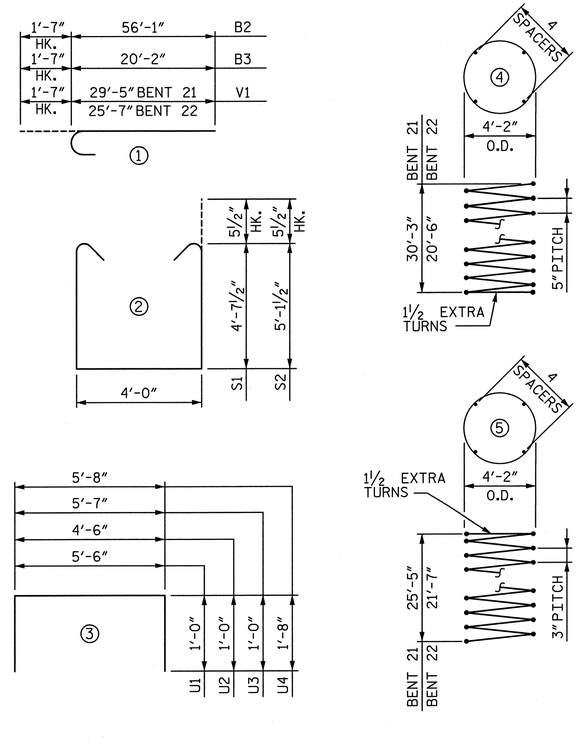

ALL BAR DIMENSIONS ARE OUT TO OUT

BILL OF MATERIAL FOR BENT 21

BAR	NO.	SIZE	TYPE	LENGTH	WEIGHT
B1	14	#11	STR.	42'-3"	3,143
B2	9	#11	1	57'-8"	2,757
B3	9	#11	1	21'-9"	1,040
B4	20	#6	STR.	33'-3"	999
B5	9	#4	STR.	24'-9"	149
B6	9	#4	STR.	20'-0"	120
B7	20	#4	STR.	5'-8"	76
B8	14	#11	STR.	30'-2"	2,244
B9	2	#6	STR.	42'-4"	127
M1	80	#11	STR.	40'-0"	17,002
S1	102	#5	2	14'-2"	1,507
S2	56	#5	2	15'-2"	886
U1	11	#4	3	7'-6"	56
U2	5	#4	3	6'-6"	22
U3	5	#4	3	7'-7"	26
U4	81	#4	3	9'-0"	487
V1	80	#11	1	31'-0"	13,176
SP-1	4	✱✱	4	960'-5"	4,007
SP-2	4	✱	5	1,339'-3"	3,578

BILL OF MATERIAL FOR BENT 22

BAR	NO.	SIZE	TYPE	LENGTH	WEIGHT
B1	14	#11	STR.	42'-3"	3,143
B2	9	#11	1	57'-8"	2,757
B3	9	#11	1	21'-9"	1,040
B4	20	#6	STR.	33'-3"	999
B5	9	#4	STR.	24'-9"	149
B6	9	#4	STR.	20'-0"	120
B7	20	#4	STR.	5'-8"	76
B8	14	#11	STR.	30'-2"	2,244
B9	2	#6	STR.	42'-4"	127
M1	80	#11	STR.	30'-3"	12,857
S1	102	#5	2	14'-2"	1,507
S2	56	#5	2	15'-2"	886
U1	11	#4	3	7'-6"	56
U2	5	#4	3	6'-6"	22
U3	5	#4	3	7'-7"	26
U4	81	#4	3	9'-0"	487
V1	80	#11	1	27'-2"	11,547
SP-1	4	✱✱	4	657'-9"	2,744
SP-2	4	✱	5	1,140'-4"	3,047

✱✱ THE SP-1 SPIRAL REINFORCING STEEL SHALL BE W31 OR D-31 COLD DRAWN WIRE OR #5 PLAIN OR DEFORMED BAR WITH A 5"PITCH.

✱ THE SP-2 SPIRAL REINFORCING SHALL BE W20 OR D-20 COLD DRAWN WIRE OR #4 PLAIN OR DEFORMED BAR WITH A 3"PITCH.

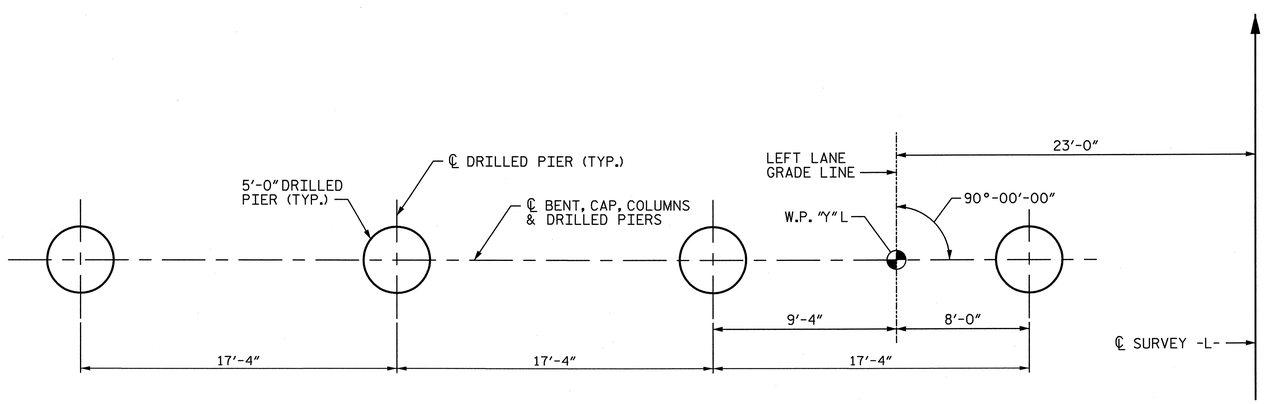

PLAN OF DRILLED PIERS

NOTE:
SEE TABLE A SHEET 1 FOR "Y".

PROJECT NO. U-2524C
GUILFORD COUNTY
STATION: POT 407+73.35 -L-
= POT 29+32.06 -Y4-

SHEET 3 OF 3

STATE OF NORTH CAROLINA
DEPARTMENT OF TRANSPORTATION
RALEIGH

SUBSTRUCTURE
BENTS 21 & 22
DETAILS & BILL OF MATERIAL

-LEFT LANE-

NORTH CAROLINA PROFESSIONAL SEAL 28479 ENGINEER KEVIN G. BAILEY
5-30-13

STV / Ralph Whitehead Associates, Inc.
1000 West Morehead St., Ste. 200
Charlotte, NC 28208
NC License No. F-0991

REVISIONS						
NO.	BY:	DATE:	NO.	BY:	DATE:	SHEET NO. S-222
1			3			TOTAL SHEETS 836
2			4			

DRAWN BY : KDH DATE : 9-12
CHECKED BY : JAN DATE : 12-12
DESIGN ENGINEER OF RECORD: K. BAILEY DATE : 5-13

5/30/2013 5:04:01 PM R:\ustation\Finals\Bent 21-22 - 3 of 3.dgn

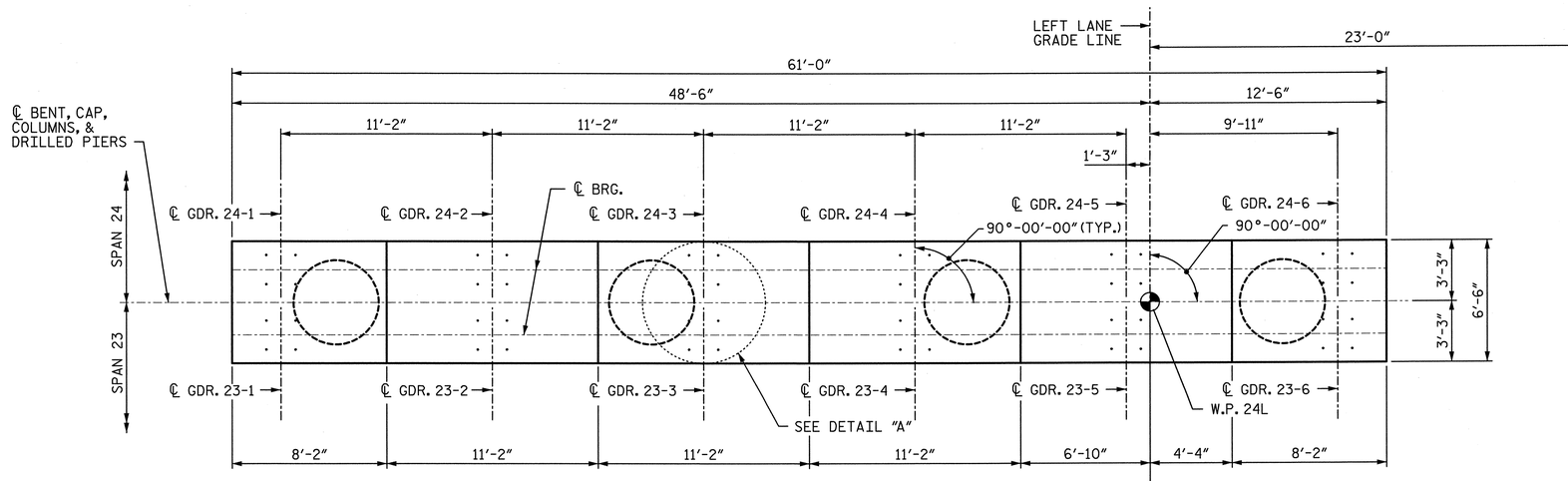

PLAN

NOTE:
INVERT ALTERNATE PAIRS OF STIRRUPS.

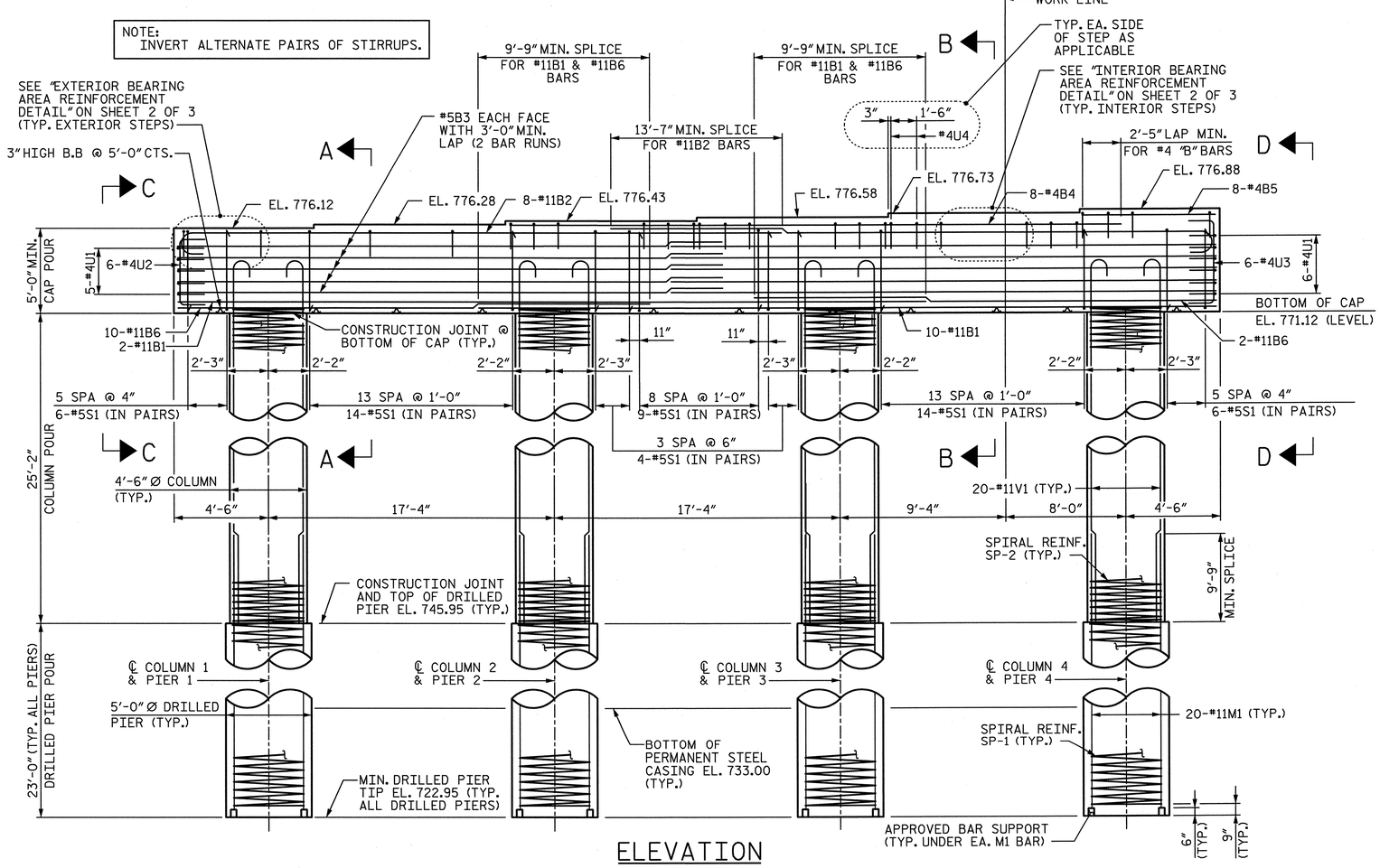

ELEVATION

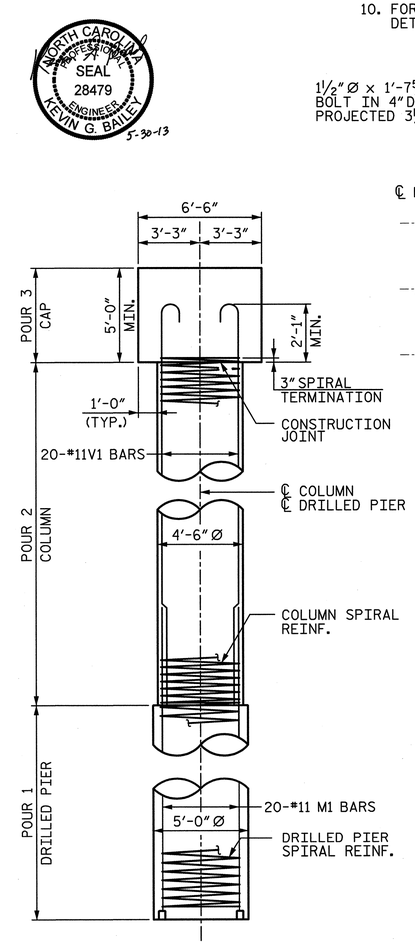

SIDE VIEW

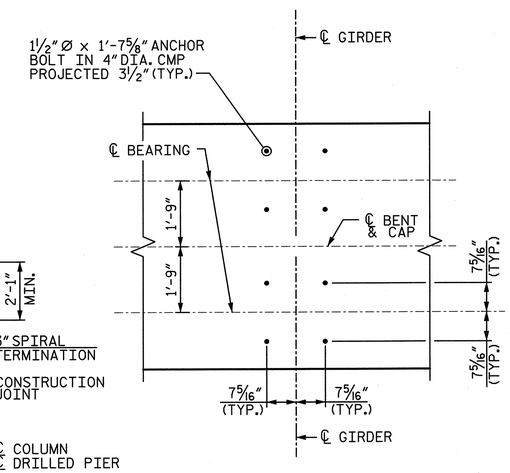

DETAIL "A"

(TYP. AT EACH BRIDGE SEAT)

NOTES:

1. ALL REINFORCING STEEL IN THE DRILLED PIERS IS INCLUDED IN THE PAY ITEMS FOR "REINFORCING STEEL" AND "SPIRAL COLUMN REINFORCING STEEL".
2. THE LOCATION OF THE CONSTRUCTION JOINT IN THE DRILLED PIERS IS BASED ON AN APPROXIMATE GROUND LINE ELEVATION. IF THE CONSTRUCTION JOINT IS ABOVE THE ACTUAL GROUND ELEVATION, THE CONTRACTOR SHALL PLACE THE CONSTRUCTION JOINT 1 FOOT BELOW THE GROUND LINE.
3. STIRRUPS AND "U BARS" IN CAP MAY BE SHIFTED SLIGHTLY AS NECESSARY TO CLEAR ANCHOR BOLTS.
4. HOOKS ON BARS MAY BE TURNED AS NECESSARY FOR PLACING REINFORCING STEEL.
5. A CONSTRUCTION JOINT AT MID-HEIGHT OF COLUMN IS PERMITTED.
6. FOR 1½" Ø ANCHOR BOLTS, SEE "POT BEARING DETAILS" SHEET.
7. SEE "GENERAL DRAWING GENERAL NOTES" SHEET FOR ADDITIONAL NOTES.
8. SEE SHEET 2 OF 3 FOR SECTIONS CALLED OUT ON ELEVATION VIEW.
9. THE TOP SURFACE AREAS OF THE BENT CAPS SHALL BE CURED IN ACCORDANCE WITH THE STANDARD SPECIFICATIONS EXCEPT THE MEMBRANE CURING COMPOUND METHOD SHALL NOT BE USED.
10. FOR PIPE INSERT DETAILS, SEE "POT BEARING DETAILS" SHEETS.

NORTH CAROLINA PROFESSIONAL SEAL 28479 ENGINEER KEVIN G. BAILEY 5-30-13

PROJECT NO. U-2524C
GUILFORD COUNTY
STATION: POT 407+73.35 -L-
= POT 29+32.06 -Y4-

SHEET 1 OF 3

STATE OF NORTH CAROLINA
DEPARTMENT OF TRANSPORTATION
RALEIGH

SUBSTRUCTURE
BENT 23
PLAN & ELEVATION

-LEFT LANE-

REVISIONS							SHEET NO.
NO.	BY:	DATE:	NO.	BY:	DATE:		S-223
1			3				TOTAL SHEETS
2			4				836

STV / Ralph Whitehead Associates, Inc.
1000 West Morehead St. Ste. 200
Charlotte, NC 28208
NC License No. F-0991

DRAWN BY : JMP	DATE : 12-12	DESIGN ENGINEER OF RECORD: K. BAILEY	DATE : 5-13
CHECKED BY : JAN	DATE : 12-12		

5/30/2013 5:04:06 PM R:\ustation\Finals\Bent 23 - 1of 3.dgn

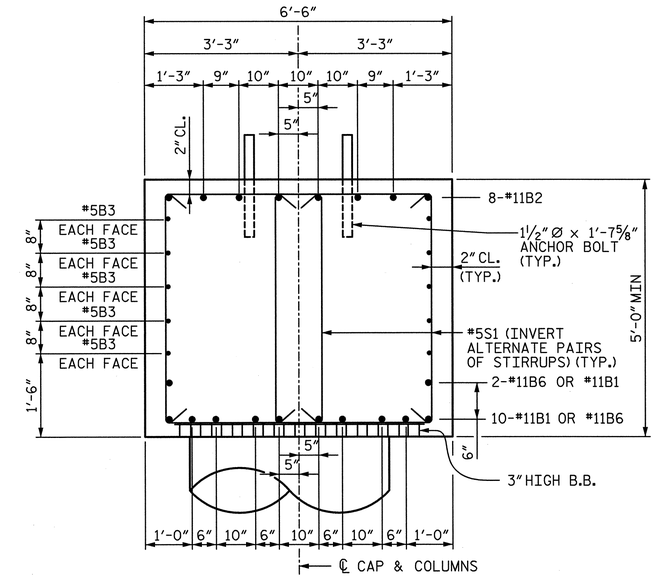

SECTION A-A

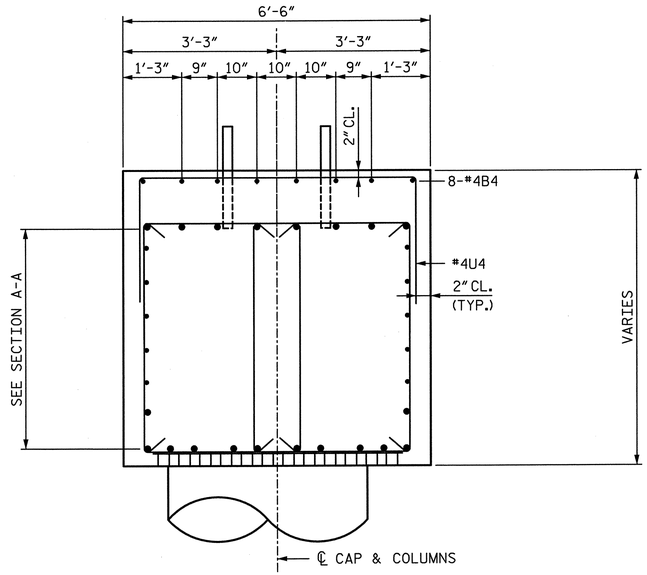

SECTION B-B

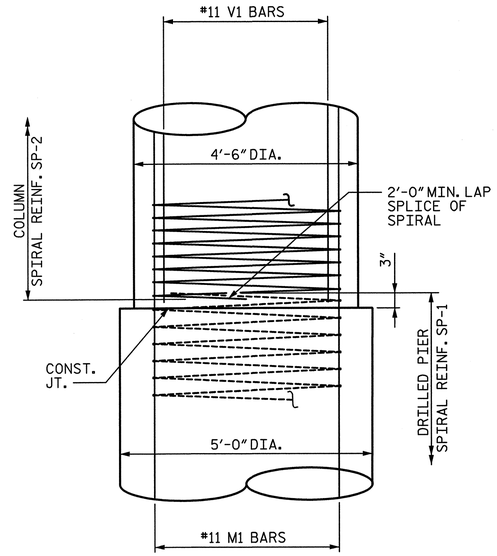

CONSTRUCTION JOINT DETAIL

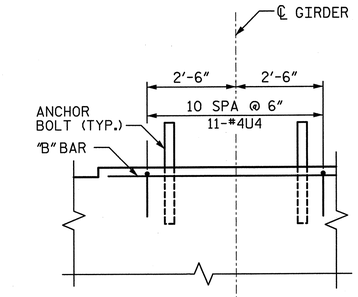

INTERIOR BEARING AREA REINFORCEMENT DETAIL

(TYP AT EACH INTERIOR BRIDGE SEAT)

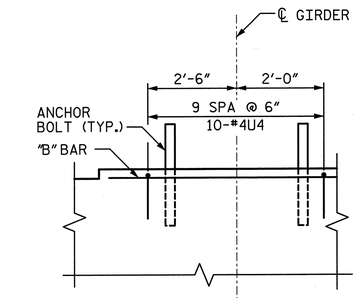

EXTERIOR BEARING AREA REINFORCEMENT DETAIL

(TYP AT EACH EXTERIOR BRIDGE SEAT)

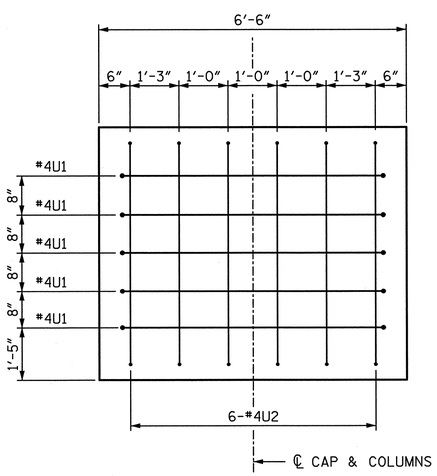

END VIEW C-C

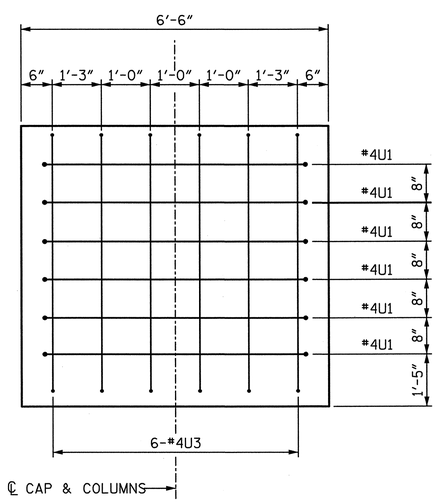

END VIEW D-D

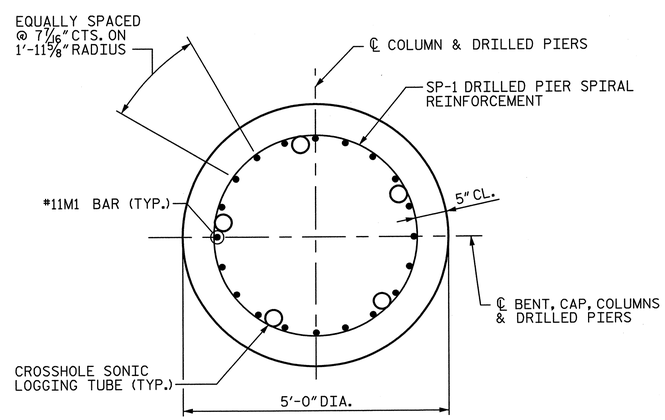

TYPICAL SECTION THROUGH DRILLED PIER

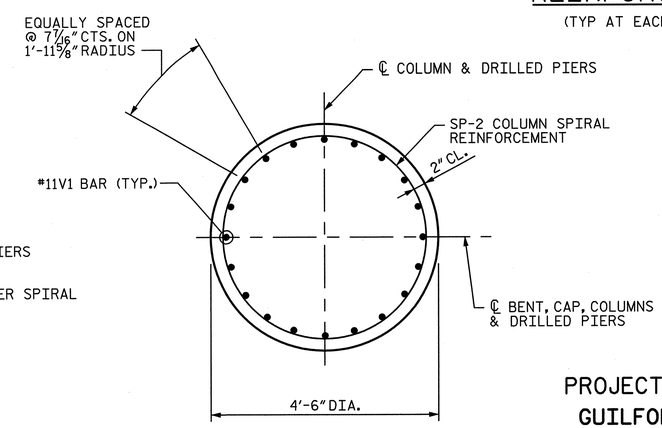

TYPICAL SECTION THROUGH COLUMN

PROJECT NO. U-2524C

GUILFORD COUNTY

STATION: POT 407+73.35 -L-
= POT 29+32.06 -Y4-

SHEET 2 OF 3

STATE OF NORTH CAROLINA
DEPARTMENT OF TRANSPORTATION
RALEIGH

SUBSTRUCTURE
BENT 23
DETAILS

-LEFT LANE-

NORTH CAROLINA PROFESSIONAL SEAL 28479 ENGINEER KEVIN G. BAILEY 5-30-13

REVISIONS								SHEET NO.
NO.	BY:	DATE:	NO.	BY:	DATE:			S-224
1			3					TOTAL SHEETS
2			4					836

STV / Ralph Whitehead Associates, Inc.
1000 West Morehead St., Ste. 200
Charlotte, NC 28208
NC License No. F-0991

DRAWN BY : JMP	DATE : 12-12	DESIGN ENGINEER OF RECORD: K. BAILEY	DATE : 5-13
CHECKED BY : JAN	DATE : 12-12		

R:\ustation\Finals\Bent 23 - 2 of 3.dgn 5:04:12 PM 5/30/2013

QUANTITIES

REINFORCING STEEL	LBS.	37,824
SPIRAL REINFORCING STEEL	LBS.	6,581
CLASS A CONCRETE : POUR 2 - COLUMNS	CU. YDS.	59.3
POUR 3 - CAP	CU. YDS.	79.1
TOTAL	CU. YDS.	138.4
5'-0"Ø DRILLED PIERS IN SOIL	L.F.	51
5'-0"Ø DRILLED PIERS NOT IN SOIL	L.F.	41
TOTAL 5'-0"Ø DRILLED PIERS	L.F.	92
PERMANENT STEEL CASING FOR 5'-0"Ø DRILLED PIERS	L.F.	56.0
DRILLED PIER CONCRETE : POUR 1	CU. YDS.	66.9
CSL TUBES	L.F.	490

BAR TYPES

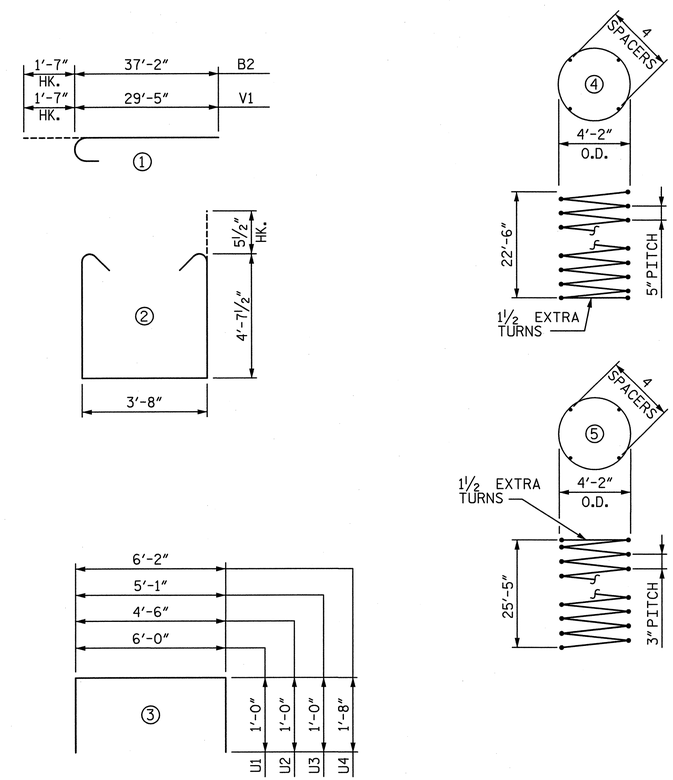

ALL BAR DIMENSIONS ARE OUT TO OUT

BILL OF MATERIAL

BAR	NO.	SIZE	TYPE	LENGTH	WEIGHT
B1	12	#11	STR.	43'-11"	2,800
B2	16	#11	①	38'-9"	3,294
B3	20	#5	STR.	31'-10"	664
B4	8	#4	STR.	35'-11"	192
B5	8	#4	STR.	7'-10"	42
B6	12	#11	STR.	26'-7"	1,695
M1	80	#11	STR.	32'-3"	13,708
S1	114	#5	②	13'-10"	1,645
U1	11	#4	③	8'-0"	59
U2	6	#4	③	6'-6"	26
U3	6	#4	③	7'-1"	28
U4	78	#4	③	9'-6"	495
V1	80	#11	①	31'-0"	13,176
SP-1	4	✱✱	④	719'-10"	3,003
SP-2	4	✱	⑤	1,339'-3"	3,578

✱✱ THE SP-1 SPIRAL REINFORCING STEEL SHALL BE W31 OR D-31 COLD DRAWN WIRE OR #5 PLAIN OR DEFORMED BAR WITH A 5"PITCH.

✱ THE SP-2 SPIRAL REINFORCING SHALL BE W20 OR D-20 COLD DRAWN WIRE OR #4 PLAIN OR DEFORMED BAR WITH A 3"PITCH.

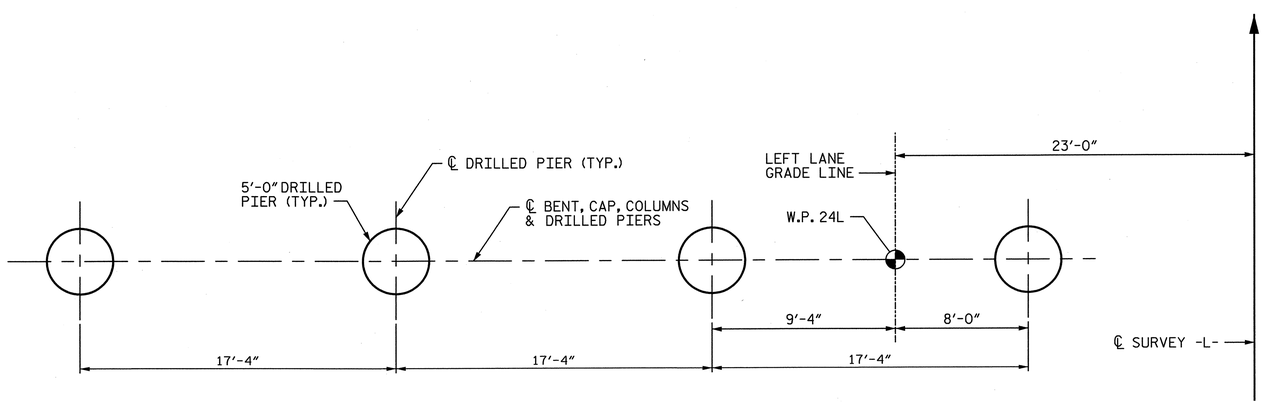

PLAN OF DRILLED PIERS

PROJECT NO. U-2524C
GUILFORD COUNTY
STATION: POT 407+73.35 -L-
= POT 29+32.06 -Y4-

SHEET 3 OF 3

STATE OF NORTH CAROLINA
DEPARTMENT OF TRANSPORTATION
RALEIGH

SUBSTRUCTURE BENT 23 DETAILS & BILL OF MATERIAL

-LEFT LANE-

NORTH CAROLINA PROFESSIONAL SEAL 28479 ENGINEER KEVIN G. BAILEY 5-30-13

STV / Ralph Whitehead Associates, Inc.
1000 West Morehead St. Ste. 200
Charlotte, NC 28208
NC License No. F-0991

REVISIONS						
NO.	BY:	DATE:	NO.	BY:	DATE:	
1			3			
2			4			

SHEET NO. S-225
TOTAL SHEETS 836

DRAWN BY : JMP DATE : 12-12
CHECKED BY : JAN DATE : 12-12
DESIGN ENGINEER OF RECORD: K. BAILEY DATE : 5-13

5/30/2013 11:32:28 PM R:\ustation\Finals\Bent 23 - 3 of 3.dgn

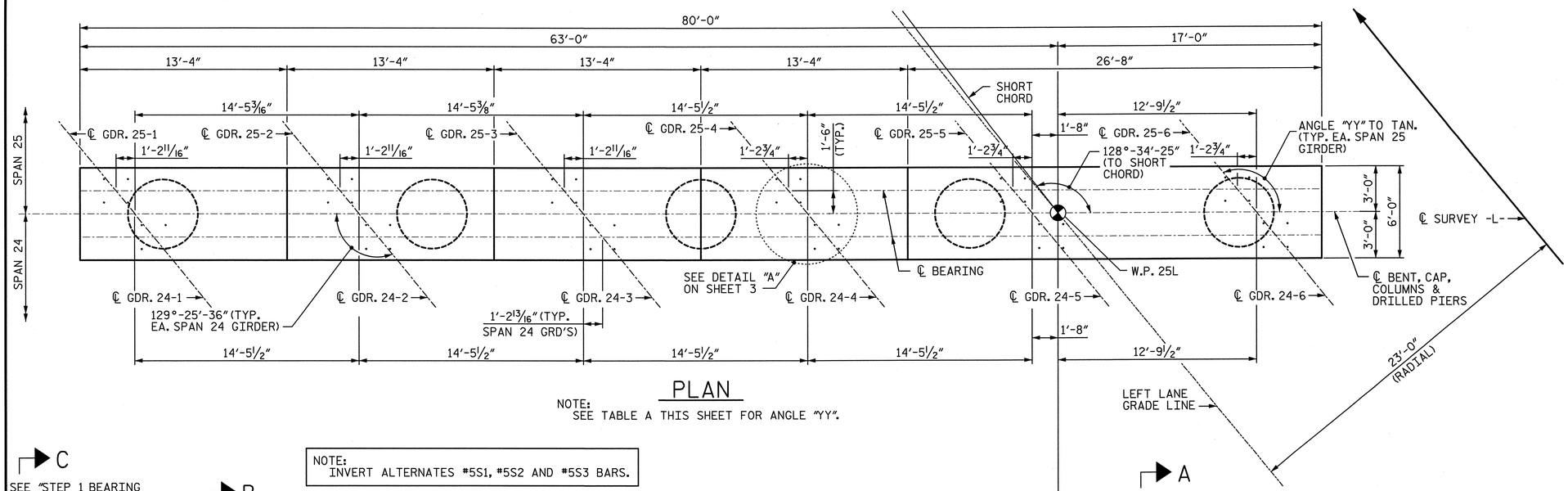

PLAN

NOTE:
SEE TABLE A THIS SHEET FOR ANGLE "YY".

NOTES:

1. ALL REINFORCING STEEL IN THE DRILLED PIERS IS INCLUDED IN THE PAY ITEMS FOR "REINFORCING STEEL" AND "SPIRAL COLUMN REINFORCING STEEL".
2. THE LOCATION OF THE CONSTRUCTION JOINT IN THE DRILLED PIERS IS BASED ON AN APPROXIMATE GROUND LINE ELEVATION. IF THE CONSTRUCTION JOINT IS ABOVE THE ACTUAL GROUND ELEVATION, THE CONTRACTOR SHALL PLACE THE CONSTRUCTION JOINT 1 FOOT BELOW THE GROUND LINE.
3. STIRRUPS AND "U BARS" IN CAP MAY BE SHIFTED SLIGHTLY AS NECESSARY TO CLEAR ANCHOR BOLTS.
4. HOOKS ON BARS MAY BE TURNED AS NECESSARY FOR PLACING REINFORCING STEEL.
5. A CONSTRUCTION JOINT AT MID-HEIGHT OF COLUMN IS PERMITTED.
6. FOR 1 1/2" Ø ANCHOR BOLTS, SEE "POT BEARING DETAILS" SHEET.
7. SEE "GENERAL DRAWING GENERAL NOTES" SHEET FOR ADDITIONAL NOTES.
8. SEE SHEET 2 OF 3 FOR SECTIONS CALLED OUT ON ELEVATION VIEW.
9. THE TOP SURFACE AREAS OF THE BENT CAPS SHALL BE CURED IN ACCORDANCE WITH THE STANDARD SPECIFICATIONS EXCEPT THE MEMBRANE CURING COMPOUND METHOD SHALL NOT BE USED.
10. FOR PIPE INSERT DETAILS, SEE "POT BEARING DETAILS" SHEETS.

NOTE:
INVERT ALTERNATES #5S1, #5S2 AND #5S3 BARS.

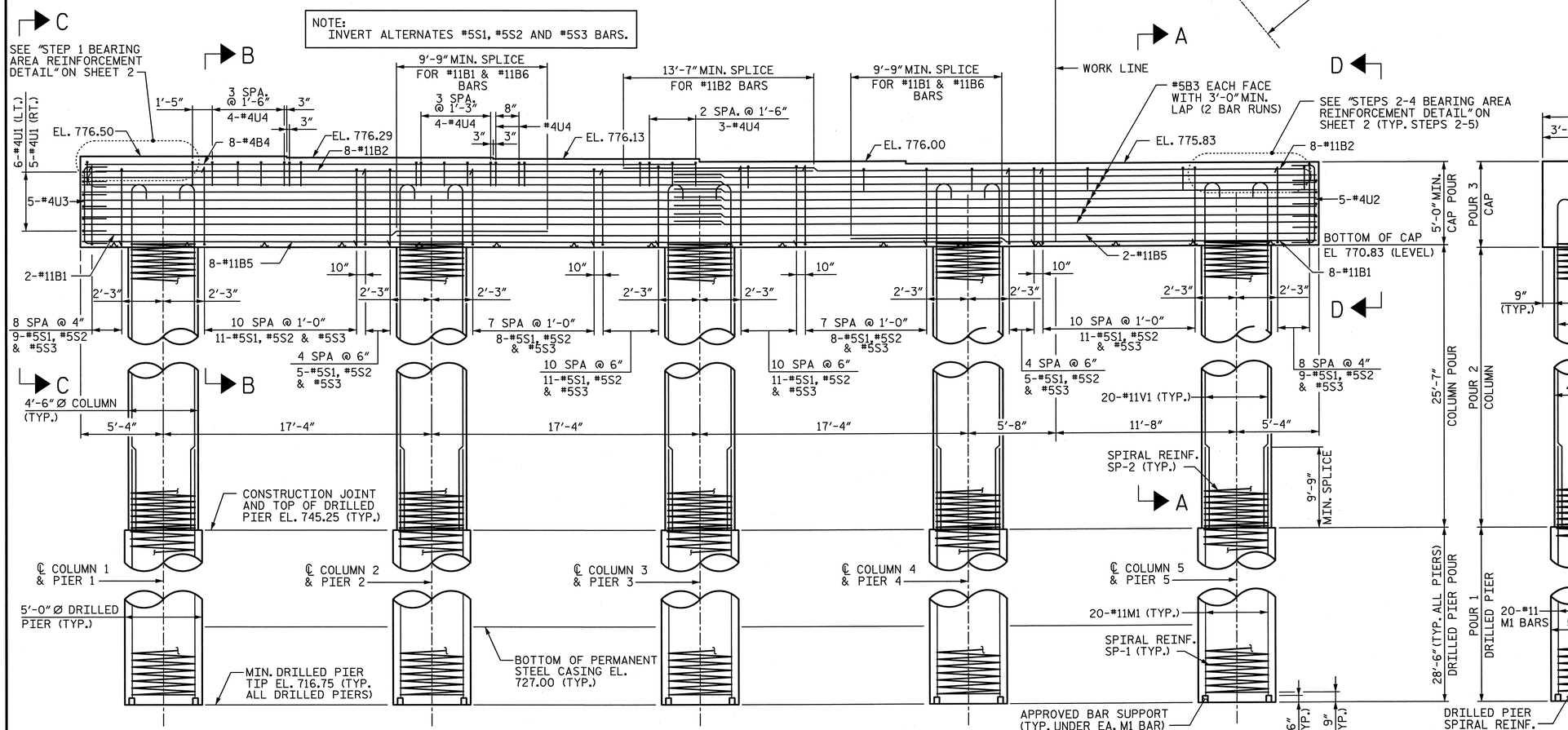

ELEVATION

SIDE VIEW

TABLE A	
PLAN VIEW ANGLES	
GDR.	ANGLE "YY"
25-1	129°-15'-42"
25-1	129°-20'-50"
25-1	129°-25'-36"
25-1	129°-25'-36"
25-1	129°-25'-36"
25-1	129°-25'-36"
25-1	129°-25'-36"

NORTH CAROLINA PROFESSIONAL SEAL 28479 ENGINEER KEVIN G. BAILEY 5-30-13

PROJECT NO. U-2524C
GUILFORD COUNTY
STATION: POT 407+73.35 -L-
= POT 29+32.06 -Y4-

SHEET 1 OF 3

STATE OF NORTH CAROLINA
DEPARTMENT OF TRANSPORTATION
RALEIGH

SUBSTRUCTURE
BENT 24
PLAN & ELEVATION

-LEFT LANE-

REVISIONS							
NO.	BY:	DATE:	NO.	BY:	DATE:	SHEET NO.	S-226
1			3			TOTAL SHEETS	836
2			4				

STV / Ralph Whitehead Associates, Inc.
1000 West Morehead St. Ste. 200
Charlotte, NC 28208
NC License No. F-0991

DRAWN BY : JMP	DATE : 12-12	DESIGN ENGINEER OF RECORD: K. BAILEY	DATE : 5-13
CHECKED BY : JAN	DATE : 12-12		

5/30/2013 5:04:23 PM R:\ustation\Finals\Bent 24 - 1of 3.dgn

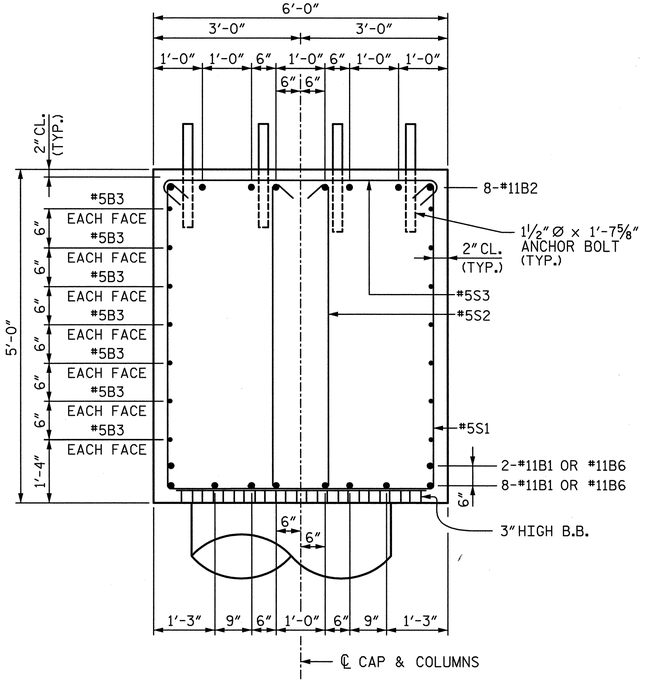

SECTION A-A

NOTE:
INVERT ALTERNATE #5S1, #5S2 AND #5S3 BARS.

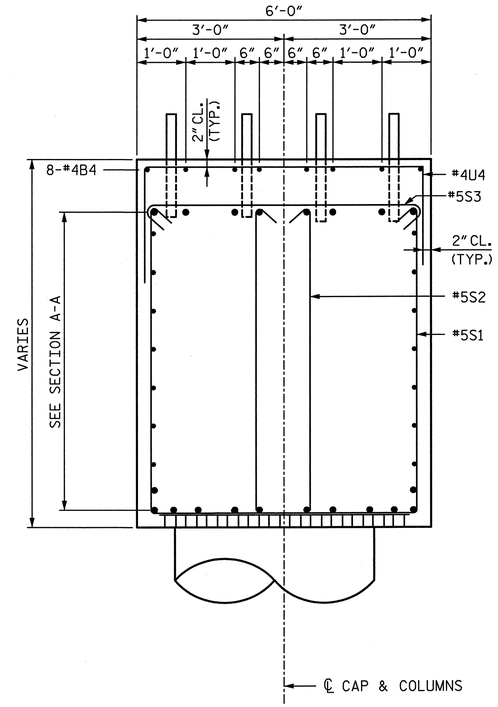

SECTION B-B

NOTE:
INVERT ALTERNATE #5S1, #5S2 AND #5S3 BARS.

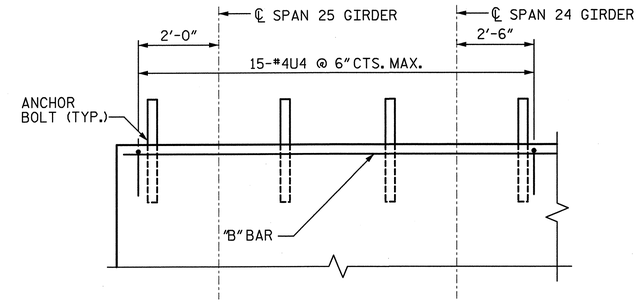

STEP 1 BEARING AREA REINFORCEMENT DETAIL

(TYP. AT BRIDGE SEAT 1)
(℄ GIRDERS SHOWN AT ℄ BRG.)

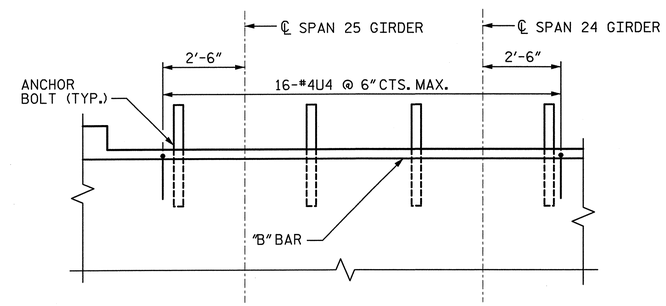

STEPS 2-5 BEARING AREA REINFORCEMENT DETAIL

(TYP. AT BRIDGE SEATS 2-5)
(℄ GIRDERS SHOWN @ ℄ BRG.)

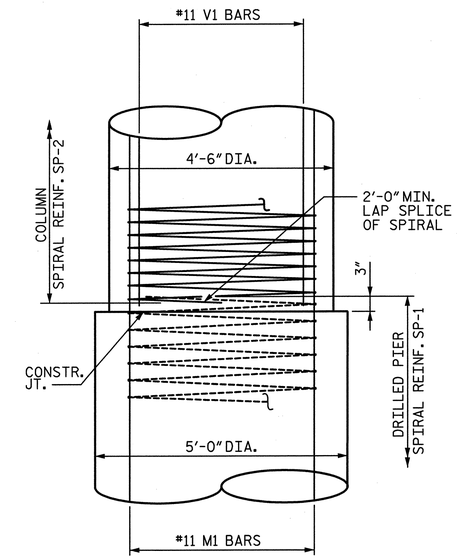

CONSTRUCTION JOINT DETAIL

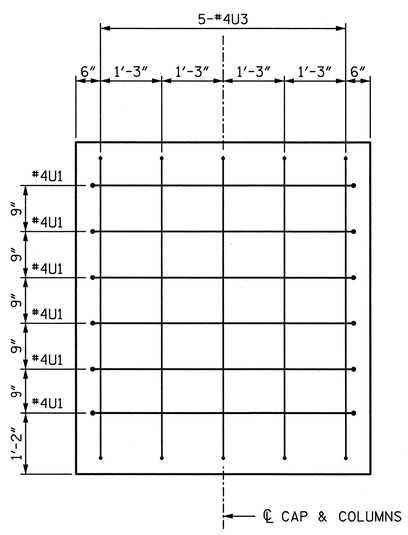

END VIEW C-C

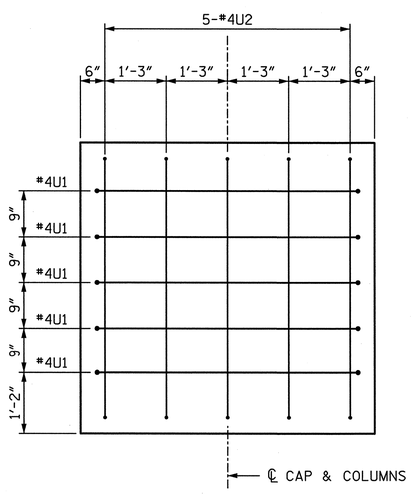

END VIEW D-D

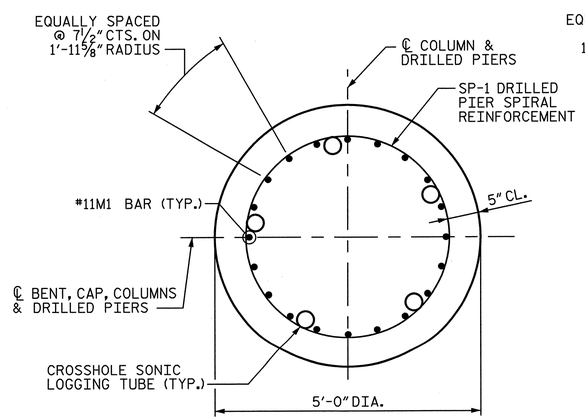

TYPICAL SECTION THROUGH DRILLED PIER

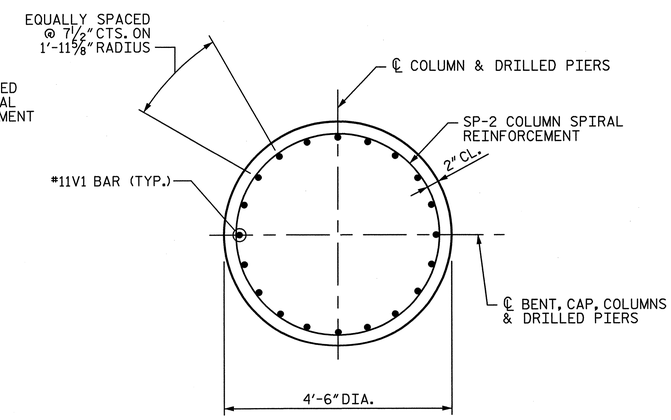

TYPICAL SECTION THROUGH COLUMN

NORTH CAROLINA PROFESSIONAL SEAL 28479 ENGINEER KEVIN G. BAILEY 5-30-13

PROJECT NO. U-2524C
GUILFORD COUNTY
STATION: POT 407+73.35 -L-
= POT 29+32.06 -Y4-
SHEET 2 OF 3

STATE OF NORTH CAROLINA
DEPARTMENT OF TRANSPORTATION
RALEIGH

SUBSTRUCTURE
BENT 24
DETAILS

-LEFT LANE-

REVISIONS						SHEET NO.
NO.	BY:	DATE:	NO.	BY:	DATE:	S-227
1			3			TOTAL SHEETS
2			4			836

STV / Ralph Whitehead Associates, Inc.
1000 West Morehead St. Ste. 200
Charlotte, NC 28208
NC License No. F-0991

DRAWN BY : JMP DATE : 12-12
CHECKED BY : JAN DATE : 12-12
DESIGN ENGINEER OF RECORD: K. BAILEY DATE : 5-13

R:\ustation\Finals\Bent 24 - 2 of 3.dgn 5:04:28 PM 5/30/2013

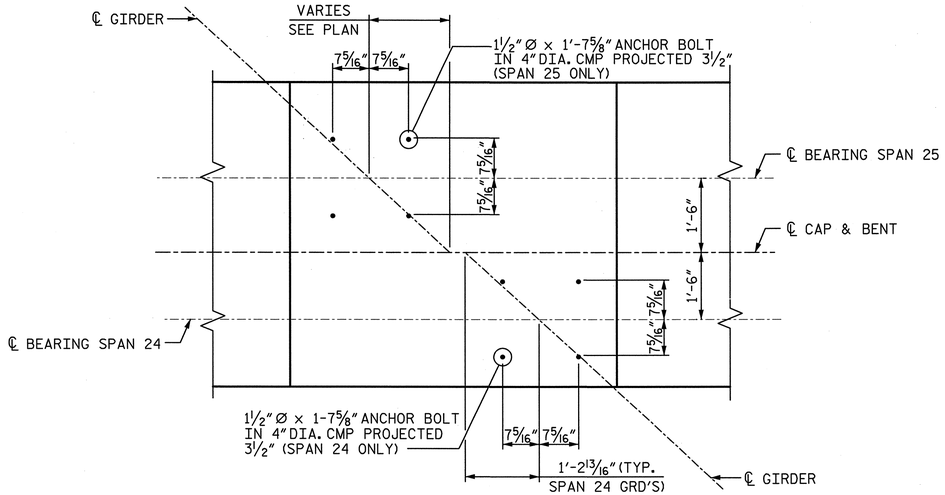

DETAIL "A"

(TYP AT EACH BRIDGE SEAT)

BAR TYPES

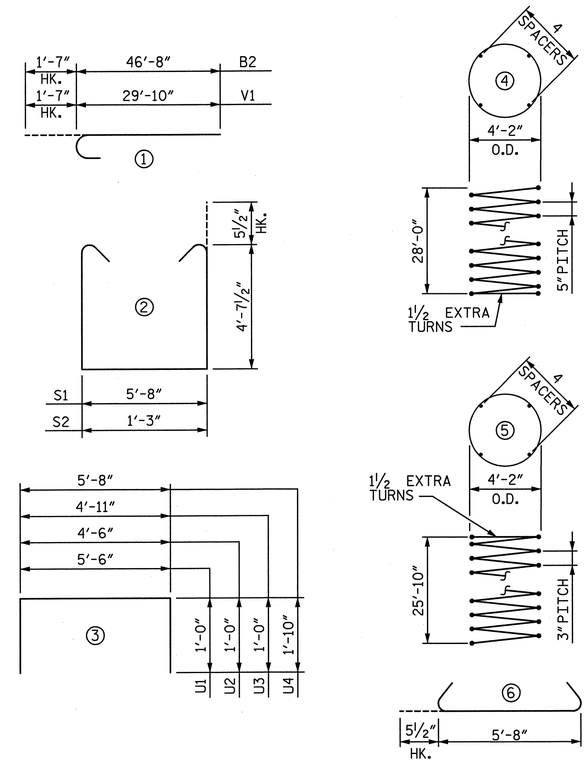

ALL BAR DIMENSIONS ARE OUT TO OUT

BILL OF MATERIAL

BAR	NO.	SIZE	TYPE	LENGTH	WEIGHT
B1	10	#11	STR.	30'-0"	1,594
B2	16	#11	1	48'-3"	4,102
B3	28	#5	STR.	41'-4"	1,207
B4	8	#4	STR.	39'-8"	212
B5	10	#11	STR.	59'-5"	3,157
M1	100	#11	STR.	37'-9"	20,057
S1	88	#5	2	15'-10"	1,453
S2	88	#5	2	11'-5"	1,048
S3	88	#5	6	6'-7"	604
U1	11	#4	3	7'-6"	55
U2	5	#4	3	6'-6"	22
U3	5	#4	3	6'-11"	23
U4	109	#4	3	9'-4"	680
V1	100	#11	1	31'-5"	16,692
SP-1	5	✱✱	4	890'-6"	4,644
SP-2	5	✱	5	1,360'-10"	4,545

✱✱ THE SP-1 SPIRAL REINFORCING STEEL SHALL BE W31 OR D-31 COLD DRAWN WIRE OR #5 PLAIN OR DEFORMED BAR WITH A 5" PITCH.

✱ THE SP-2 SPIRAL REINFORCING SHALL BE W20 OR D-20 COLD DRAWN WIRE OR #4 PLAIN OR DEFORMED BAR WITH A 3" PITCH.

QUANTITIES

REINFORCING STEEL	LBS.	50,906
SPIRAL REINFORCING STEEL	LBS.	9,189
CLASS A CONCRETE : POUR 2 - COLUMNS	CU. YDS.	75.4
POUR 3 - CAP	CU. YDS.	93.6
TOTAL	CU. YDS.	169.0
5'-0" Ø DRILLED PIERS IN SOIL	L.F.	91
5'-0" Ø DRILLED PIERS NOT IN SOIL	L.F.	52
TOTAL 5'-0" Ø DRILLED PIERS	L.F.	143
PERMANENT STEEL CASING FOR 5'-0" Ø DRILLED PIERS	L.F.	97
DRILLED PIER CONCRETE : POUR 1	CU. YDS.	103.6
CSL TUBES	L.F.	750

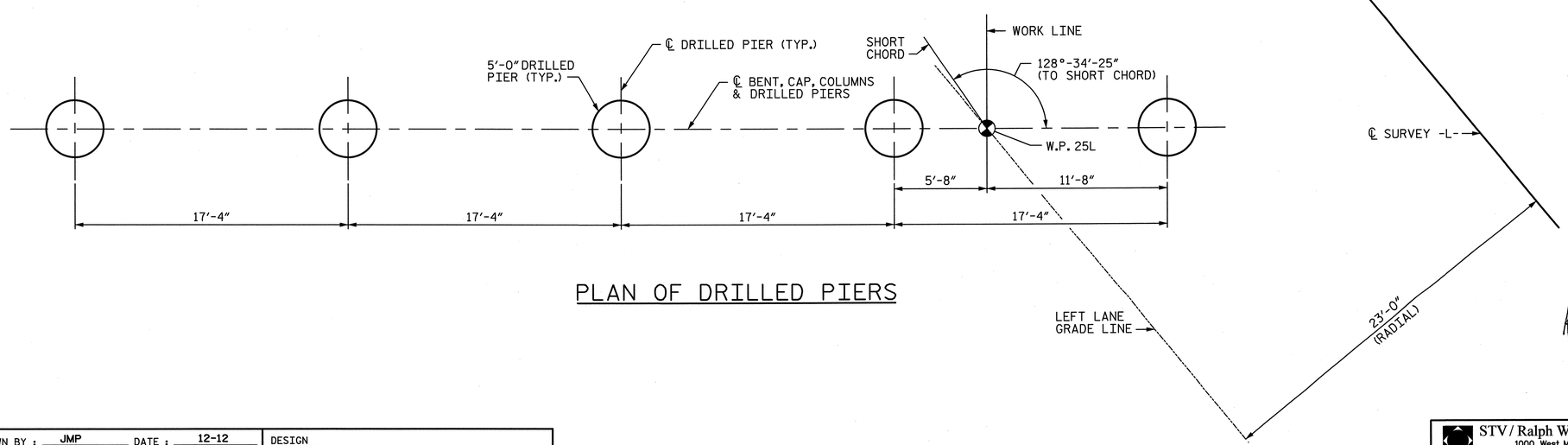

PLAN OF DRILLED PIERS

NORTH CAROLINA PROFESSIONAL SEAL 28479 ENGINEER KEVIN G. BAILEY 6-7-13

PROJECT NO. U-2524C

GUILFORD COUNTY

STATION: POT 407+73.35 -L-
= POT 29+32.06 -Y4-

SHEET 3 OF 3

STATE OF NORTH CAROLINA
DEPARTMENT OF TRANSPORTATION
RALEIGH

SUBSTRUCTURE
BENT 24
DETAILS & BILL OF MATERIAL

-LEFT LANE-

DRAWN BY : JMP	DATE : 12-12	DESIGN ENGINEER OF RECORD: K. BAILEY	DATE : 5-13
CHECKED BY : JAN	DATE : 12-12		

STV / Ralph Whitehead Associates, Inc.
1000 West Morehead St., Ste. 200
Charlotte, NC 28208
NC License No. F-0991

REVISIONS								SHEET NO.
NO.	BY:	DATE:	NO.	BY:	DATE:			S-228
1			3					TOTAL SHEETS
2			4					836

6/7/2013 1:17:15 PM R:\ustation\Finals\Bent 24 - 3 of 3.dgn

TABLE A ELEVATION VIEW DIMENSIONS	
COL.	DIMENSION "CC"
1	26'-5 5/8"
2	25'-9 1/2"
3	25'-1 3/8"
4	24'-5 1/8"
5	23'-9"

NOTES:

1. ALL REINFORCING STEEL IN THE DRILLED PIERS IS INCLUDED IN THE PAY ITEMS FOR "REINFORCING STEEL" AND "SPIRAL COLUMN REINFORCING STEEL".
2. THE LOCATION OF THE CONSTRUCTION JOINT IN THE DRILLED PIERS IS BASED ON AN APPROXIMATE GROUND LINE ELEVATION. IF THE CONSTRUCTION JOINT IS ABOVE THE ACTUAL GROUND ELEVATION, THE CONTRACTOR SHALL PLACE THE CONSTRUCTION JOINT 1 FOOT BELOW THE GROUND LINE.
3. STIRRUPS AND "U BARS" IN CAP MAY BE SHIFTED SLIGHTLY AS NECESSARY TO CLEAR ANCHOR BOLTS.
4. HOOKS ON BARS MAY BE TURNED AS NECESSARY FOR PLACING REINFORCING STEEL.
5. A CONSTRUCTION JOINT AT MID-HEIGHT OF COLUMN IS PERMITTED.
6. FOR 1 1/2" Ø ANCHOR BOLTS, SEE "POT BEARING DETAILS" SHEET.
7. SEE "GENERAL DRAWING GENERAL NOTES" SHEET FOR ADDITIONAL NOTES.
8. SEE SHEET 2 OF 3 FOR SECTIONS CALLED OUT ON ELEVATION VIEW.
9. FOR PIPE INSERT DETAILS, SEE "POT BEARING DETAILS" SHEETS.

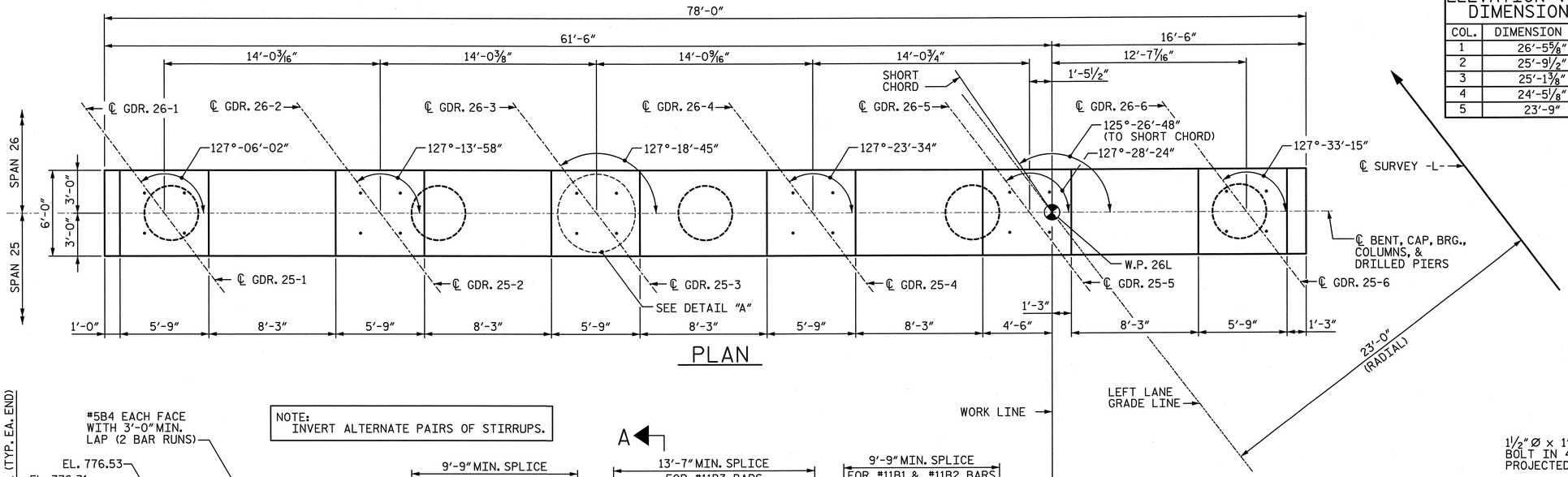

PLAN

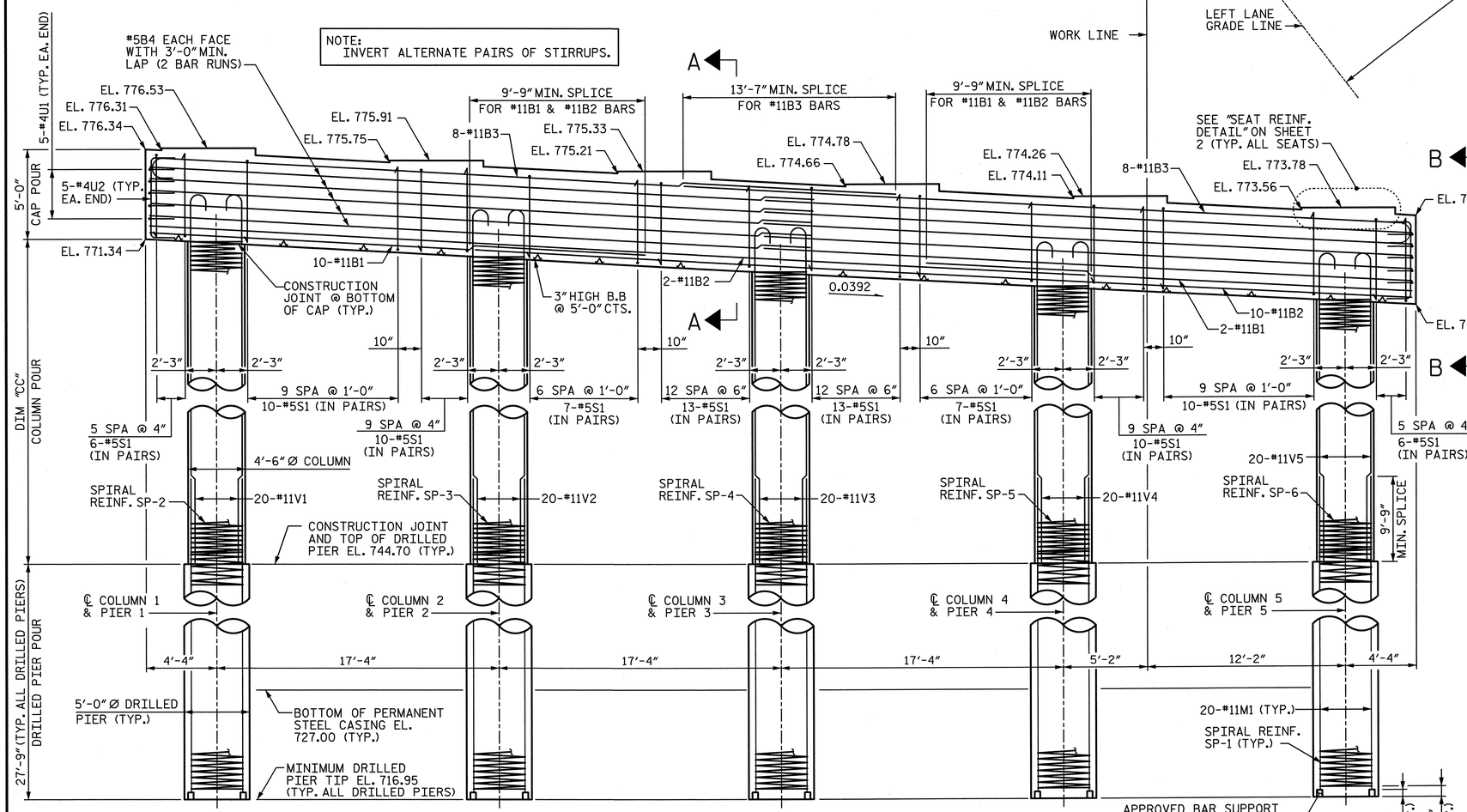

ELEVATION

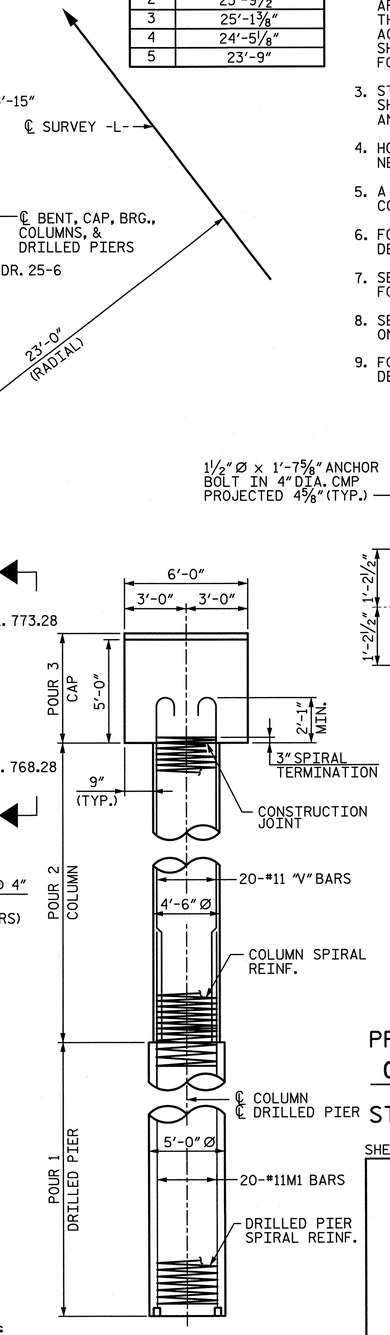

SIDE VIEW

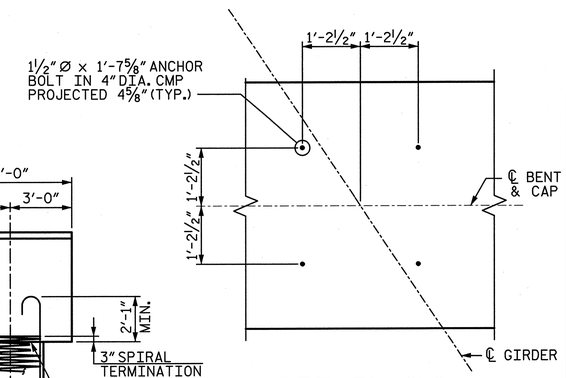

DETAIL "A"
(TYP AT EACH BRIDGE SEAT)

NORTH CAROLINA PROFESSIONAL SEAL 28479 ENGINEER KEVIN G. BAILEY 6-7-13

PROJECT NO. U-2524C
GUILFORD COUNTY
STATION: POT 407+73.35 -L-
= POT 29+32.06 -Y4-

SHEET 1 OF 3

STATE OF NORTH CAROLINA
DEPARTMENT OF TRANSPORTATION
RALEIGH

SUBSTRUCTURE
BENT 25
PLAN & ELEVATION

-LEFT LANE-

NOTE:
SEE TABLE A THIS SHEET FOR "CC" DIMENSION.

DRAWN BY : JMP	DATE : 12-12	DESIGN ENGINEER OF RECORD: K. BAILEY	DATE : 5-13
CHECKED BY : JAN	DATE : 12-12		

STV/ Ralph Whitehead Associates, Inc.
1000 West Morehead St., Ste. 200
Charlotte, NC 28208
NC License No. F-0991

REVISIONS								SHEET NO.
NO.	BY:	DATE:	NO.	BY:	DATE:			S-229
1			3					TOTAL SHEETS
2			4					836

R:\ustation\Finals\Bent 25 - 1of 3.dgn 3:08:35 PM 6/7/2013

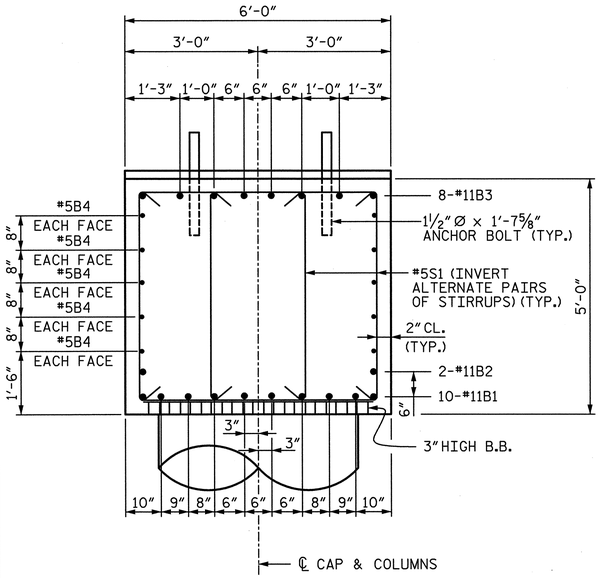

SECTION A-A

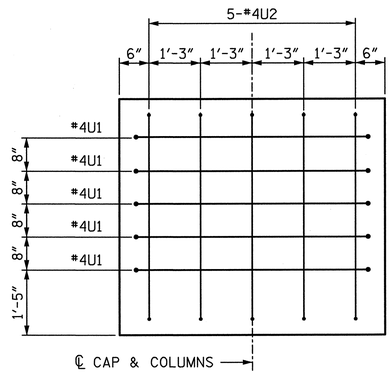

END VIEW B-B

(RIGHT END SHOWN, LEFT END SIMILAR)

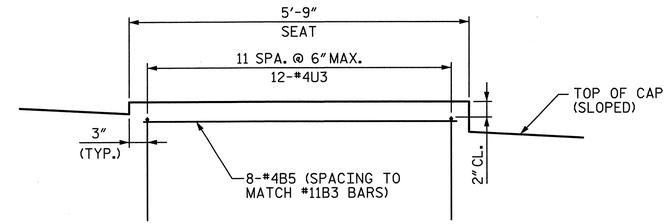

SEAT REINFORCEMENT DETAIL

(TYPICAL AT EACH BEARING SEAT)

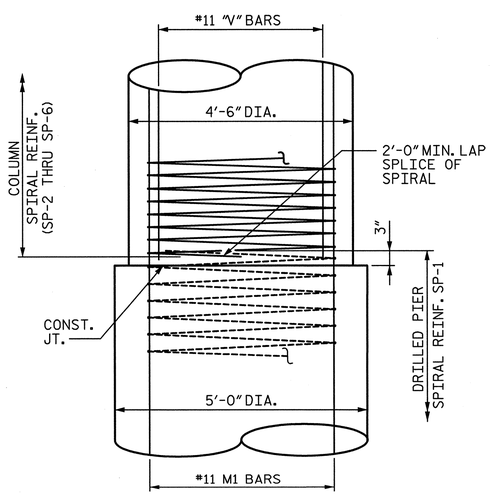

CONSTRUCTION JOINT DETAIL

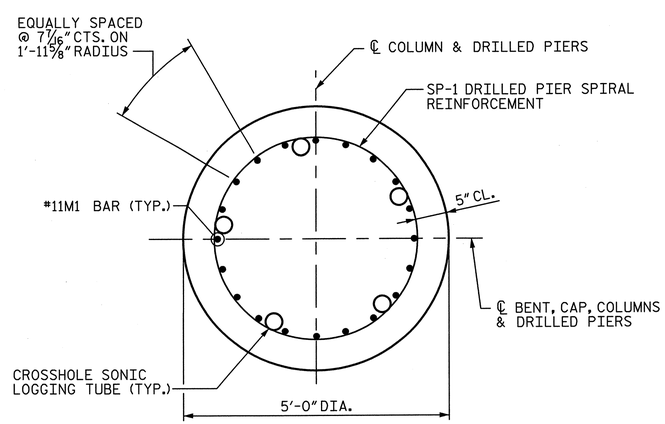

TYPICAL SECTION THROUGH DRILLED PIER

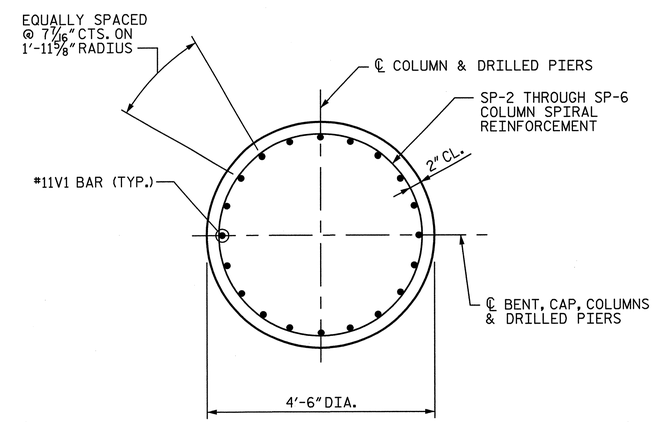

TYPICAL SECTION THROUGH COLUMN

NORTH CAROLINA PROFESSIONAL SEAL 28479 ENGINEER KEVIN G. BAILEY 5-30-13

PROJECT NO. U-2524C

GUILFORD COUNTY

STATION: POT 407+73.35 -L-
= POT 29+32.06 -Y4-

SHEET 2 OF 3

STATE OF NORTH CAROLINA
DEPARTMENT OF TRANSPORTATION
RALEIGH

SUBSTRUCTURE
BENT 25
DETAILS

-LEFT LANE-

DRAWN BY : JMP	DATE : 12-12	DESIGN ENGINEER OF RECORD: K. BAILEY	DATE : 5-13
CHECKED BY : JAN	DATE : 12-12		

STV / Ralph Whitehead Associates, Inc.
1000 West Morehead St., Ste. 200
Charlotte, NC 28208
NC License No. F-0991

REVISIONS						
NO.	BY:	DATE:	NO.	BY:	DATE:	
1			3			
2			4			

SHEET NO. S-230

TOTAL SHEETS 836

5/30/2013 5:04:42 PM R:\ustation\FInals\Bent 25 - 2 of 3.dgn

QUANTITIES

REINFORCING STEEL	LBS.	49,908
SPIRAL REINFORCING STEEL	LBS.	8,995
CLASS A CONCRETE : POUR 2 - COLUMNS	CU. YDS.	74.1
POUR 3 - CAP	CU. YDS.	88.6
TOTAL	CU. YDS.	162.6
5'-0"Ø DRILLED PIERS IN SOIL	L.F.	87
5'-0"Ø DRILLED PIERS NOT IN SOIL	L.F.	52
TOTAL 5'-0"Ø DRILLED PIERS	L.F.	139
PERMANENT STEEL CASING FOR 5'-0"Ø DRILLED PIERS	L.F.	94
DRILLED PIER CONCRETE : POUR 1	CU. YDS.	100.9
CSL TUBES	L.F.	694

BAR TYPES

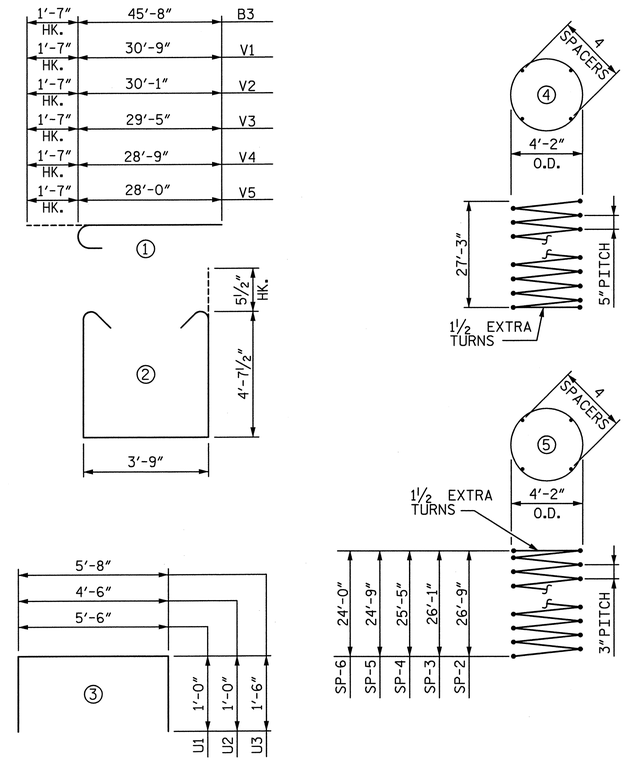

ALL BAR DIMENSIONS ARE OUT TO OUT

BILL OF MATERIAL

BAR	NO.	SIZE	TYPE	LENGTH	WEIGHT
B1	12	#11	STR.	29'-0"	1,849
B2	12	#11	STR.	58'-5"	3,724
B3	16	#11	①	47'-3"	4,017
B4	20	#5	STR.	40'-4"	841
B5	48	#4	STR.	5'-5"	174
M1	100	#11	STR.	37'-0"	19,658
S1	184	#5	②	13'-11"	2,671
U1	10	#4	③	7'-6"	51
U2	10	#4	③	6'-6"	44
U3	72	#4	③	8'-8"	417
V1	20	#11	①	32'-4"	3,436
V2	20	#11	①	31'-8"	3,365
V3	20	#11	①	31'-0"	3,294
V4	20	#11	①	30'-4"	3,223
V5	20	#11	①	29'-7"	3,144
SP-1	5	✱✱	④	867'-3"	4,523
SP-2	1	✱	⑤	1,408'-4"	941
SP-3	1	✱	⑤	1,373'-10"	918
SP-4	1	✱	⑤	1,339'-3"	895
SP-5	1	✱	⑤	1,304'-8"	872
SP-6	1	✱	⑤	1,265'-9"	846

✱✱ THE SP-1 SPIRAL REINFORCING STEEL SHALL BE W31 OR D-31 COLD DRAWN WIRE OR #5 PLAIN OR DEFORMED BAR WITH A 5"PITCH.

✱ THE SP-2 THROUGH SP-6 SPIRAL REINFORCING SHALL BE W20 OR D-20 COLD DRAWN WIRE OR #4 PLAIN OR DEFORMED BAR WITH A 3" PITCH.

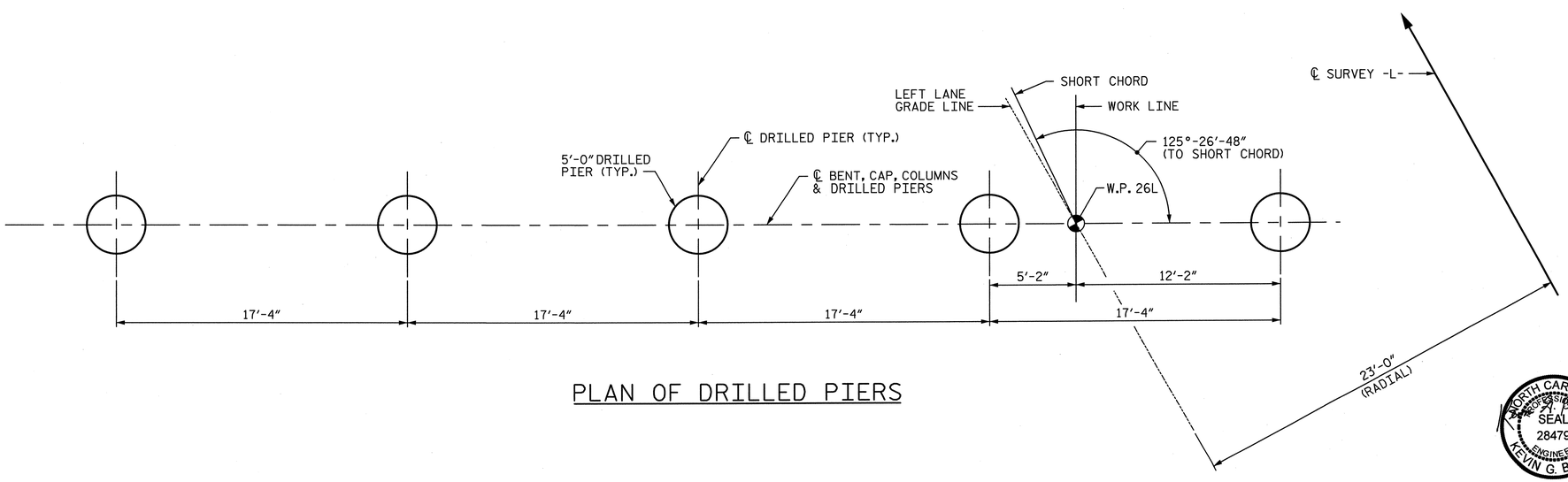

PLAN OF DRILLED PIERS

NORTH CAROLINA PROFESSIONAL SEAL 28479 ENGINEER KEVIN G. BAILEY 5-30-13

PROJECT NO. U-2524C

GUILFORD COUNTY

STATION: POT 407+73.35 -L-
= POT 29+32.06 -Y4-

SHEET 3 OF 3

STATE OF NORTH CAROLINA
DEPARTMENT OF TRANSPORTATION
RALEIGH

SUBSTRUCTURE
BENT 25
DETAILS & BILL OF MATERIAL

-LEFT LANE-

DRAWN BY : JMP	DATE : 12-12	DESIGN ENGINEER OF RECORD: K. BAILEY	DATE : 5-13
CHECKED BY : JAN	DATE : 12-12		

STV / Ralph Whitehead Associates, Inc.
1000 West Morehead St., Ste. 200
Charlotte, NC 28208
NC License No. F-0991

REVISIONS						SHEET NO.
NO.	BY:	DATE:	NO.	BY:	DATE:	S-231
1			3			TOTAL SHEETS
2			4			836

5/30/2013 5:04:46 PM R:\ustation\Finals\Bent 25- 3 of 3.dgn

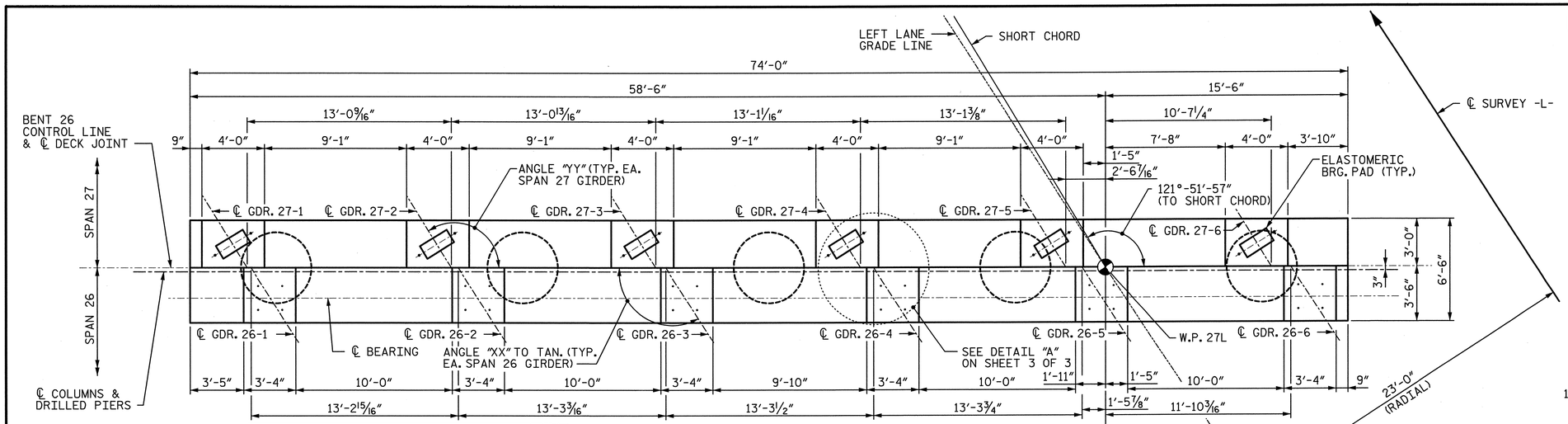

PLAN

THE CONTRACTOR'S ATTENTION IS CALLED TO THE FACT THAT THE CENTERLINE JOINT IN THE DECK SLAB (CONTROL LINE) IS OFFSET FROM THE CENTERLINE BENT.

NOTE:
SEE TABLE A THIS SHEET FOR "XX" AND "YY" ANGLES.
SEE TABLE B THIS SHEET FOR "AA" AND "BB" DIMENSIONS.

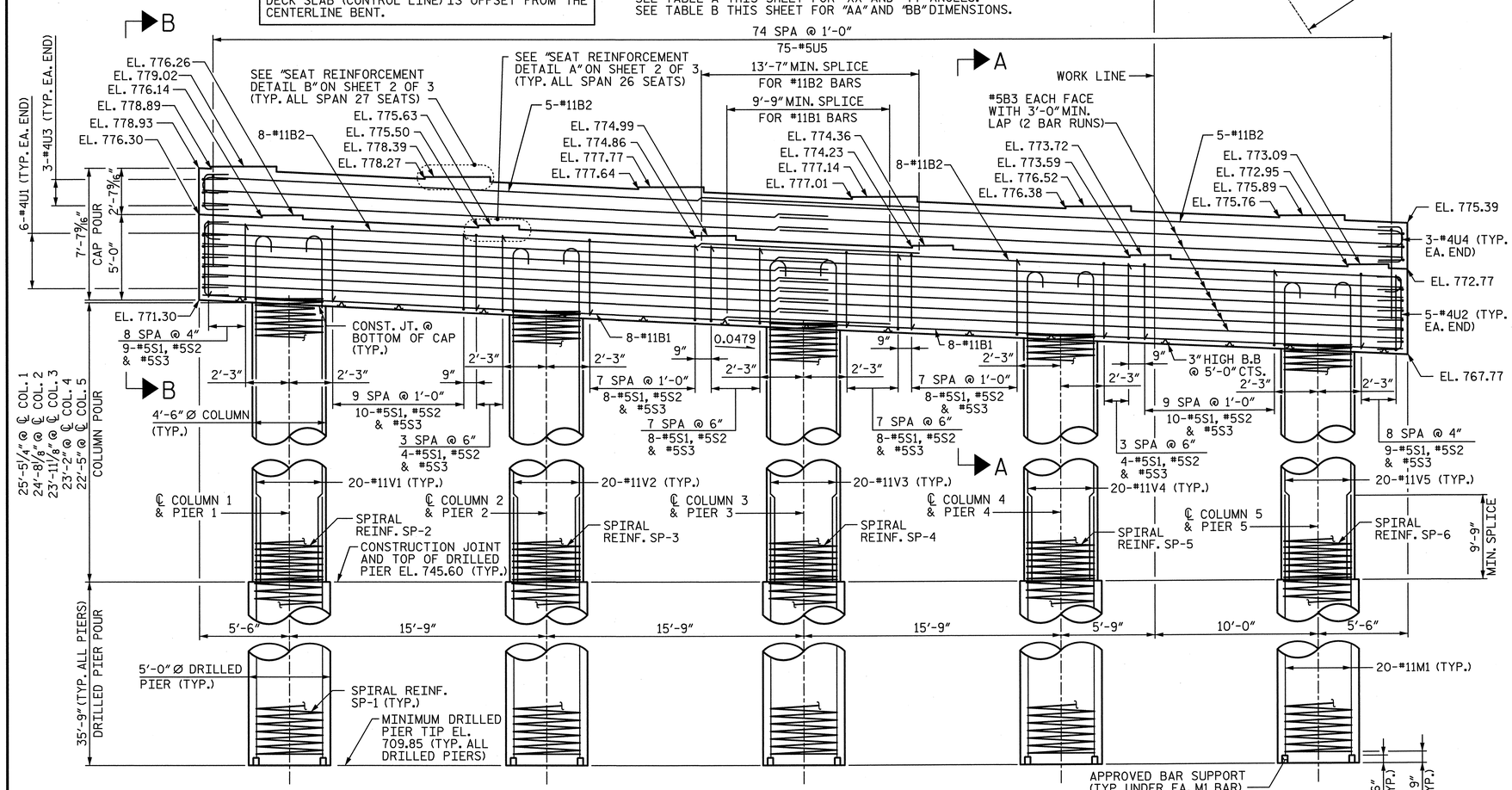

NOTE:
INVERT ALTERNATE #5S1, #5S2 AND #5S3 BARS.

ELEVATION

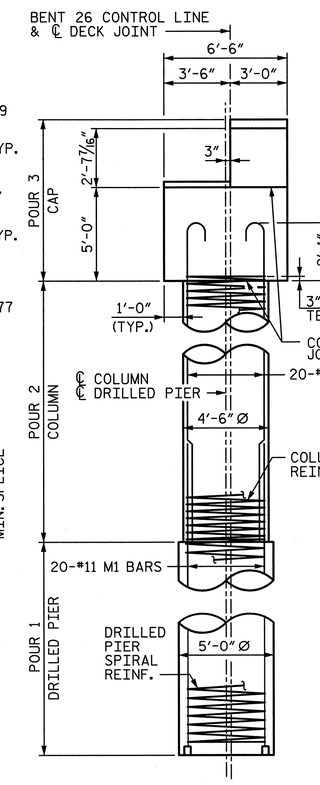

SIDE VIEW

NOTES:

1. ALL REINFORCING STEEL IN THE DRILLED PIERS IS INCLUDED IN THE PAY ITEMS FOR "REINFORCING STEEL" AND "SPIRAL COLUMN REINFORCING STEEL".
2. THE LOCATION OF THE CONSTRUCTION JOINT IN THE DRILLED PIERS IS BASED ON AN APPROXIMATE GROUND LINE ELEVATION. IF THE CONSTRUCTION JOINT IS ABOVE THE ACTUAL GROUND ELEVATION, THE CONTRACTOR SHALL PLACE THE CONSTRUCTION JOINT 1 FOOT BELOW THE GROUND LINE.
3. STIRRUPS AND "U BARS" IN CAP MAY BE SHIFTED SLIGHTLY AS NECESSARY TO CLEAR ANCHOR BOLTS.
4. HOOKS ON BARS MAY BE TURNED AS NECESSARY FOR PLACING REINFORCING STEEL.
5. A CONSTRUCTION JOINT AT MID-HEIGHT OF COLUMN IS PERMITTED.
6. FOR 1½" Ø ANCHOR BOLTS, SEE "POT BEARING DETAILS" SHEET.
7. FOR "AB1" ANCHOR BOLTS, SEE "ELASTOMERIC BEARING DETAILS" SHEET.
8. SEE "GENERAL DRAWING GENERAL NOTES" SHEET FOR ADDITIONAL NOTES.
9. SEE SHEET 2 OF 3 FOR SECTIONS CALLED OUT ON ELEVATION VIEW.
10. THE TOP SURFACE AREAS OF THE BENTS CAPS SHALL BE CURED IN ACCORDANCE WITH THE STANDARD SPECIFICATIONS, EXCEPT THE MEMBRANE CURING COMPOUND METHOD SHALL NOT BE USED.
11. FOR PIPE INSERT DETAILS, SEE "POT BEARING DETAILS" SHEETS.

TABLE A — PLAN VIEW ANGLES

GDR.	ANGLE "XX"
26-1	122°-26'-11"
26-2	122°-35'-44"
26-3	122°-45'-22"
26-4	122°-55'-07"
26-5	123°-04'-59"
26-6	123°-14'-56"
	ANGLE "YY"
27-1	121°-13'-42"
27-2	121°-22'-40"
27-3	121°-31'-44"
27-4	121°-40'-54"
27-5	121°-50'-09"
27-6	121°-59'-31"

TABLE B — PLAN VIEW DIMENSIONS

GDR.	DIM. "AA"
26-1	1'-2 5/8"
26-2	1'-2 3/4"
26-3	1'-2 13/16"
26-4	1'-2 7/8"
26-5	1'-3"
26-6	1'-3 1/8"
	DIM. "BB"
27-1	1'-9 13/16"
27-2	1'-9 15/16"
27-3	1'-10 1/16"
27-4	1'-10 3/16"
27-5	1'-10 3/8"
27-6	1'-10 1/2"

NORTH CAROLINA PROFESSIONAL SEAL 28479 ENGINEER KEVIN G. BAILEY 5-30-13

PROJECT NO. U-2524C
GUILFORD COUNTY
STATION: POT 407+73.35 -L-
= POT 29+32.06 -Y4-

SHEET 1 OF 3

STATE OF NORTH CAROLINA
DEPARTMENT OF TRANSPORTATION
RALEIGH

SUBSTRUCTURE
BENT 26
PLAN & ELEVATION

-LEFT LANE-

REVISIONS						SHEET NO.
NO.	BY:	DATE:	NO.	BY:	DATE:	S-232
1			3			TOTAL SHEETS
2			4			836

STV / Ralph Whitehead Associates, Inc.
1000 West Morehead St. Ste. 200
Charlotte, NC 28208
NC License No. F-0991

DRAWN BY: KDH DATE: 12-12
CHECKED BY: JAN DATE: 01-13
DESIGN ENGINEER OF RECORD: K. BAILEY DATE: 5-13

5/30/2013 5:04:52 PM R:\ustation\Finals\Bent 26 - 1of 3.dgn

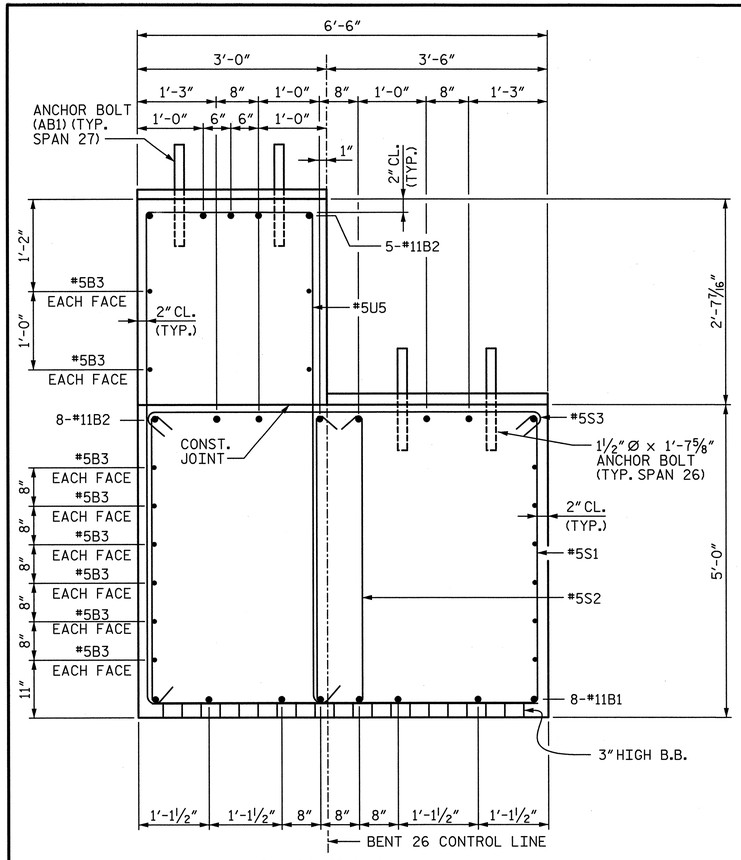

SECTION A-A

NOTE:
INVERT ALTERNATE #5S1, #5S2 & #5S3 BARS.

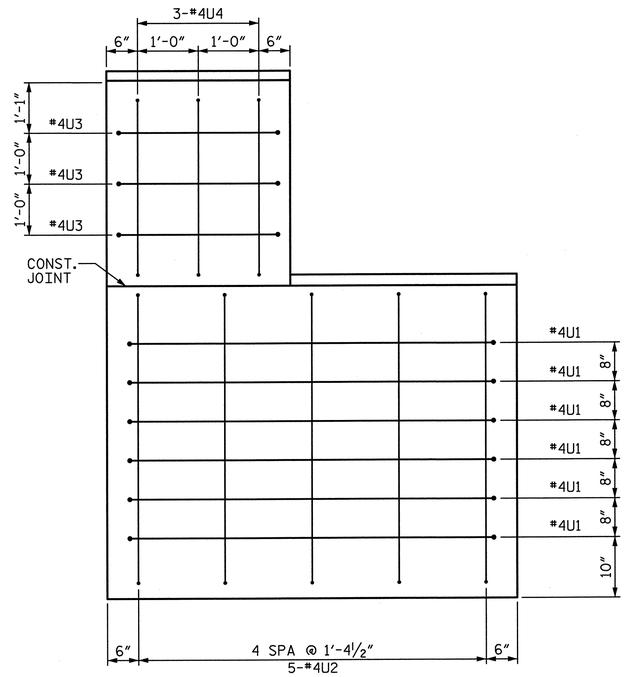

END VIEW B-B

(LEFT END SHOWN. RIGHT END SIMILAR)

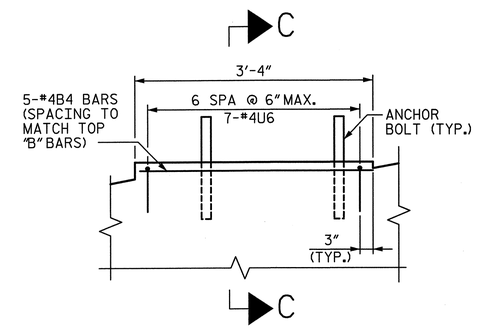

SPAN 26 BEARING AREA REINFORCEMENT DETAIL

(TYP. AT EACH BRIDGE SEAT)

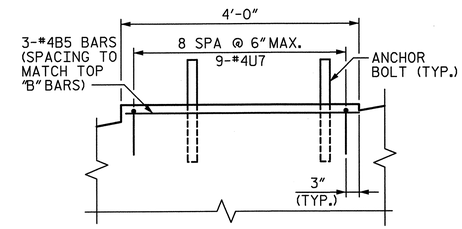

SPAN 27 BEARING AREA REINFORCEMENT DETAIL

(TYP. AT EACH BRIDGE SEAT)

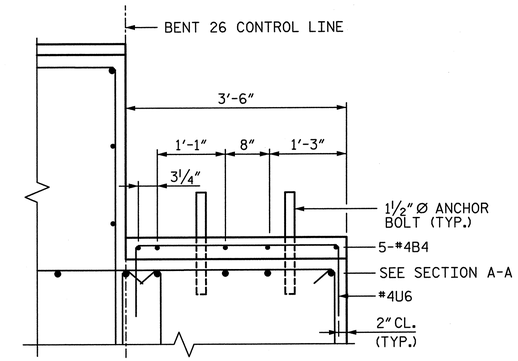

SECTION C-C

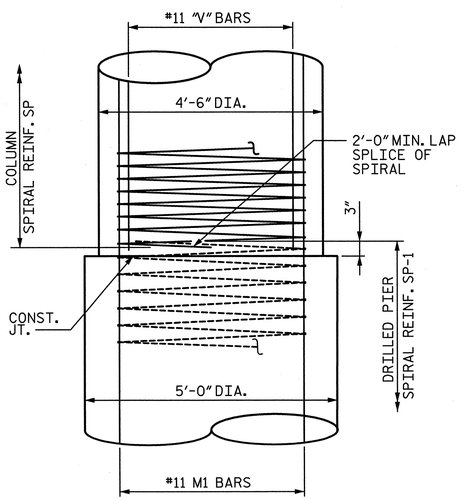

CONSTRUCTION JOINT DETAIL

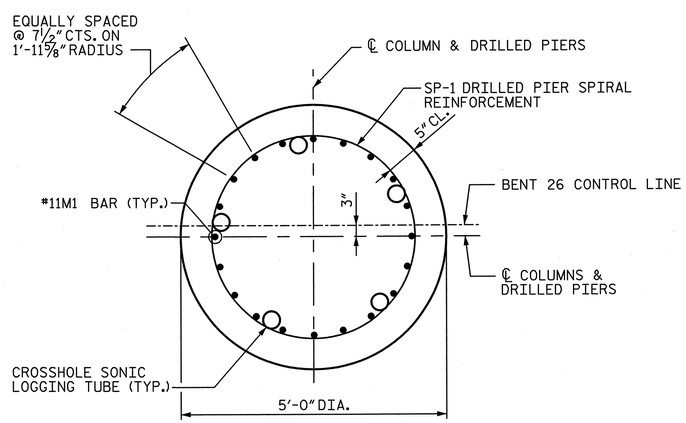

TYPICAL SECTION THROUGH DRILLED PIER

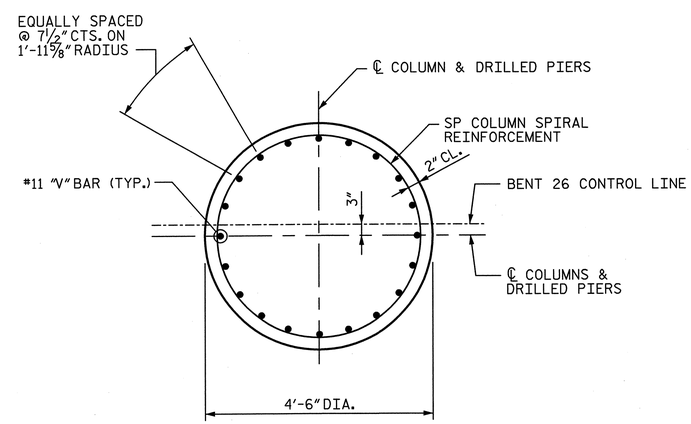

TYPICAL SECTION THROUGH COLUMN

PROJECT NO. U-2524C
GUILFORD COUNTY
STATION: POT 407+73.35 -L-
= POT 29+32.06 -Y4-
SHEET 2 OF 3

STATE OF NORTH CAROLINA
DEPARTMENT OF TRANSPORTATION
RALEIGH

SUBSTRUCTURE
BENT 26
DETAILS

-LEFT LANE-

NORTH CAROLINA PROFESSIONAL SEAL 28479 ENGINEER KEVIN G. BAILEY 5-30-13

DRAWN BY : KDH	DATE : 12-12	DESIGN ENGINEER OF RECORD: K. BAILEY	DATE : 5-13
CHECKED BY : JAN	DATE : 01-13		

STV/ Ralph Whitehead Associates, Inc.
1000 West Morehead St., Ste. 200
Charlotte, NC 28208
NC License No. F-0991

REVISIONS						
NO.	BY:	DATE:	NO.	BY:	DATE:	
1			3			
2			4			

SHEET NO. S-233
TOTAL SHEETS 83

5/30/2013 5:04:56 PM R:\ustation\Finals\Bent 26 - 2 of 3.dgn

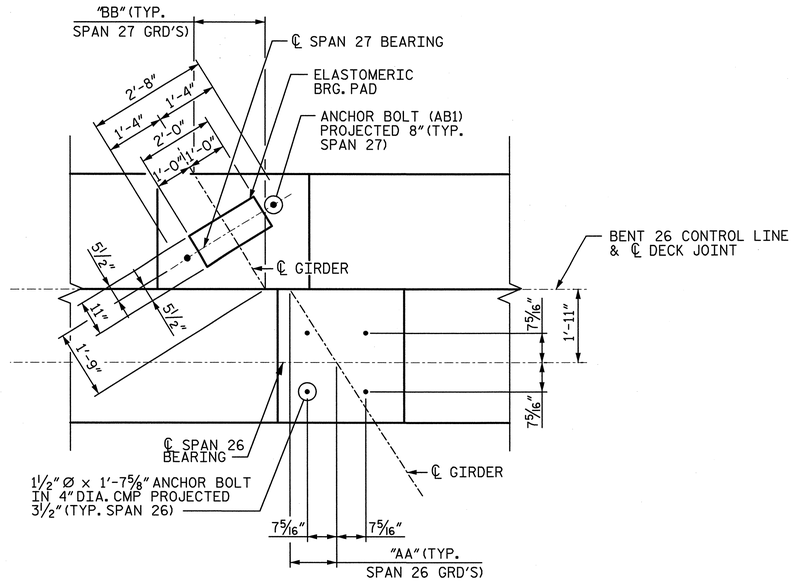

DETAIL "A"

NOTE: SEE TABLE B SHEET 1 FOR "AA" AND "BB" DIMENSIONS.

QUANTITIES

REINFORCING STEEL	LBS.	55,670
SPIRAL REINFORCING STEEL	LBS.	10,082
CLASS A CONCRETE : POUR 2 - COLUMNS	CU. YDS.	70.5
POUR 3 - CAP	CU. YDS.	111.9
TOTAL	CU. YDS.	182.4
5'-0" Ø DRILLED PIERS IN SOIL	L.F.	129
5'-0" Ø DRILLED PIERS NOT IN SOIL	L.F.	50
TOTAL 5'-0" Ø DRILLED PIERS	L.F.	179
DRILLED PIER CONCRETE : POUR 1	CU. YDS.	130.0
CSL TUBES	L.F.	932

BAR TYPES

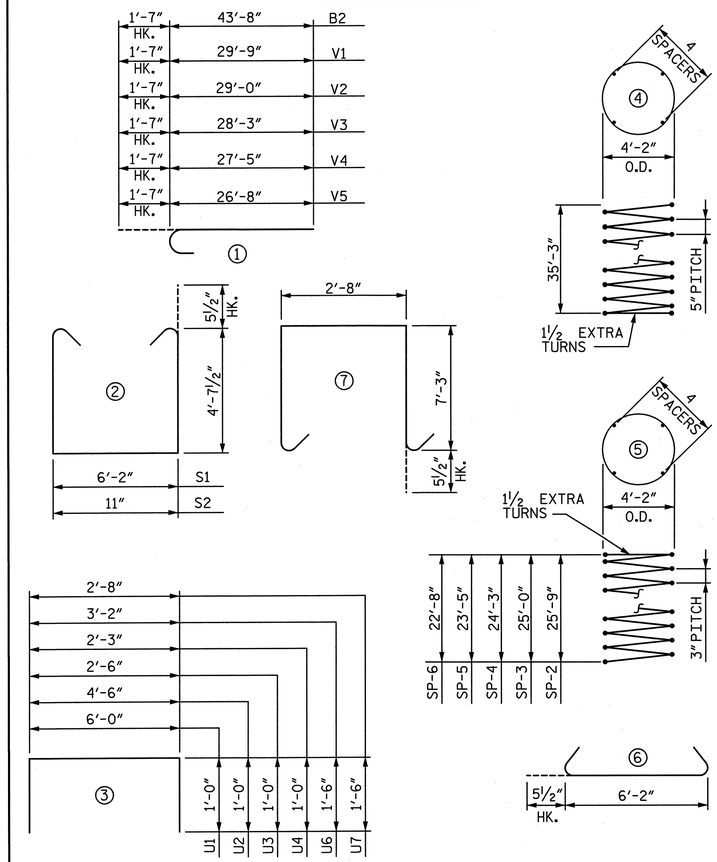

ALL BAR DIMENSIONS ARE OUT TO OUT

BILL OF MATERIAL

BAR	NO.	SIZE	TYPE	LENGTH	WEIGHT
B1	16	#11	STR.	41'-9"	3,549
B2	26	#11	1	45'-3"	6,251
B3	32	#5	STR.	38'-4"	1,279
B4	30	#4	STR.	3'-0"	60
B5	18	#4	STR.	3'-8"	44
M1	100	#11	STR.	45'-0"	23,909
S1	78	#5	2	16'-4"	1,329
S2	78	#5	2	11'-1"	902
S3	78	#5	6	7'-1"	576
U1	12	#4	3	8'-0"	64
U2	10	#4	3	6'-6"	43
U3	6	#4	3	4'-6"	18
U4	6	#4	3	4'-3"	17
U5	75	#5	7	18'-1"	1,415
U6	54	#4	3	6'-2"	222
U7	42	#4	3	5'-8"	159
V1	20	#11	1	31'-4"	3,329
V2	20	#11	1	30'-7"	3,250
V3	20	#11	1	29'-10"	3,170
V4	20	#11	1	29'-0"	3,082
V5	20	#11	1	28'-3"	3,002
SP-1	5	✱✱	4	1,115'-7"	5,818
SP-2	1	✱	5	1,356'-6"	906
SP-3	1	✱	5	1,317'-7"	880
SP-4	1	✱	5	1,278'-9"	854
SP-5	1	✱	5	1,235'-6"	825
SP-6	1	✱	5	1,196'-8"	799

✱✱ THE SP-1 SPIRAL REINFORCING STEEL SHALL BE W31 OR D-31 COLD DRAWN WIRE OR #5 PLAIN OR DEFORMED BAR WITH A 5" PITCH.

✱ THE SP-2 THROUGH SP-6 SPIRAL REINFORCING SHALL BE W20 OR D-20 COLD DRAWN WIRE OR #4 PLAIN OR DEFORMED BAR WITH A 3" PITCH.

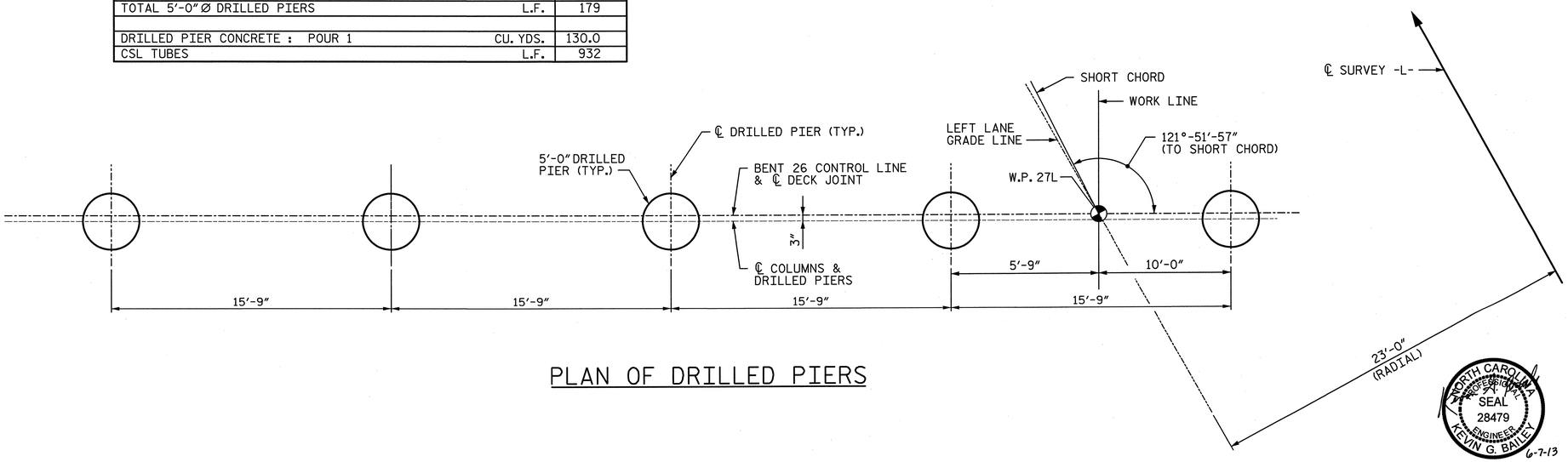

PLAN OF DRILLED PIERS

NORTH CAROLINA PROFESSIONAL SEAL 28479 ENGINEER KEVIN G. BAILEY 6-7-13

PROJECT NO. U-2524C

GUILFORD COUNTY

STATION: POT 407+73.35 -L-
= POT 29+32.06 -Y4-

SHEET 3 OF 3

STATE OF NORTH CAROLINA
DEPARTMENT OF TRANSPORTATION
RALEIGH

SUBSTRUCTURE
BENT 26
DETAILS & BILL OF MATERIAL

-LEFT LANE-

REVISIONS						
NO.	BY:	DATE:	NO.	BY:	DATE:	
1			3			
2			4			

SHEET NO. S-234

TOTAL SHEETS 236

STV / Ralph Whitehead Associates, Inc.
1000 West Morehead St., Ste. 200
Charlotte, NC 28208
NC License No. F-0991

DRAWN BY : KDH DATE : 12-12
CHECKED BY : JAN DATE : 01-13

DESIGN ENGINEER OF RECORD: K. BAILEY DATE : 5-13

6/7/2013 1:7:19 PM R:\ustation\Finals\Bent 26- 3 of 3.dgn

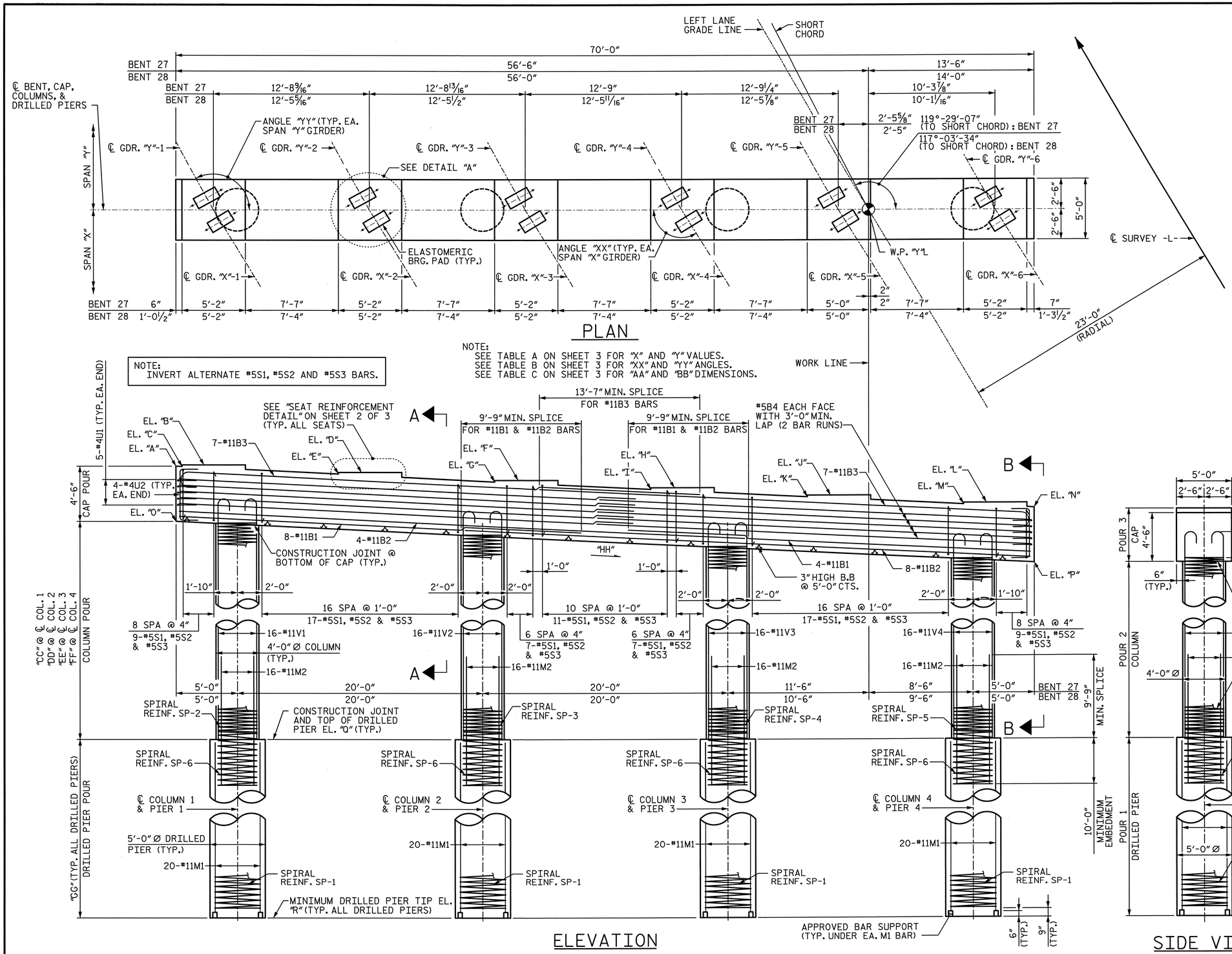

NOTES:

1. ALL REINFORCING STEEL IN THE DRILLED PIERS IS INCLUDED IN THE PAY ITEMS FOR "REINFORCING STEEL" AND "SPIRAL COLUMN REINFORCING STEEL".
2. THE LOCATION OF THE CONSTRUCTION JOINT IN THE DRILLED PIERS IS BASED ON AN APPROXIMATE GROUND LINE ELEVATION. IF THE CONSTRUCTION JOINT IS ABOVE THE ACTUAL GROUND ELEVATION, THE CONTRACTOR SHALL PLACE THE CONSTRUCTION JOINT 1 FOOT BELOW THE GROUND LINE.
3. STIRRUPS AND "U BARS" IN CAP MAY BE SHIFTED SLIGHTLY AS NECESSARY TO CLEAR ANCHOR BOLTS.
4. HOOKS ON BARS MAY BE TURNED AS NECESSARY FOR PLACING REINFORCING STEEL.
5. A CONSTRUCTION JOINT AT MID-HEIGHT OF COLUMN IS PERMITTED.
6. FOR "AB1" ANCHOR BOLTS, SEE "ELASTOMERIC BEARING DETAILS" SHEET.
7. SEE "GENERAL DRAWING GENERAL NOTES" SHEET FOR ADDITIONAL NOTES.
8. SEE SHEET 2 OF 3 FOR SECTIONS CALLED OUT ON ELEVATION VIEW.

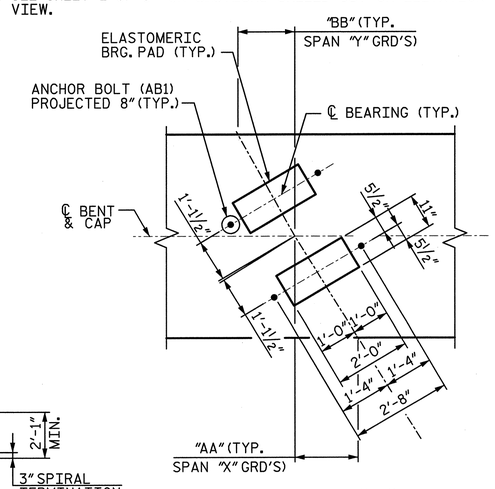

DETAIL "A"

(TYP AT EACH BRIDGE SEAT)

NOTES:
SEE TABLE A SHEET 3 FOR "X" AND "Y".
SEE TABLE C SHEET 3 FOR "AA" AND "BB" DIMENSIONS.

NORTH CAROLINA PROFESSIONAL SEAL 28479 ENGINEER KEVIN G. BAILEY 5-30-13

PROJECT NO. U-2524C

GUILFORD COUNTY

STATION: POT 407+73.35 -L-
= POT 29+32.06 -Y4-

SHEET 1 OF 3

STATE OF NORTH CAROLINA
DEPARTMENT OF TRANSPORTATION
RALEIGH

SUBSTRUCTURE BENTS 27 & 28 PLAN & ELEVATION

-LEFT LANE-

REVISIONS								SHEET NO.
NO.	BY:	DATE:	NO.	BY:	DATE:			S-235
1			3					TOTAL SHEETS
2			4					836

DRAWN BY : JMP DATE : 12-12
CHECKED BY : JAN DATE : 12-12
DESIGN ENGINEER OF RECORD: K. BAILEY DATE : 5-13

STV / Ralph Whitehead Associates, Inc.
1000 West Morehead St., Ste. 200
Charlotte, NC 28208
NC License No. F-0991

5/30/2013 5:05:05 PM R:\ustation\Finals\Bent 27-28 - 1of 3.dgn

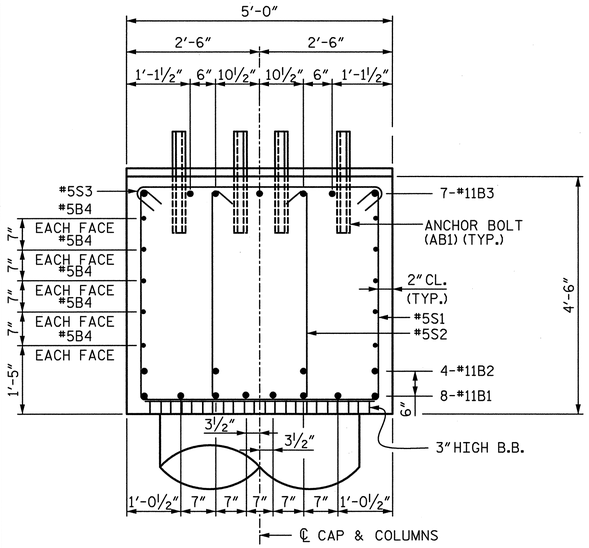

SECTION A-A

NOTE:
INVERT ALTERNATE #5S1, #5S2 AND #5S3 BARS.

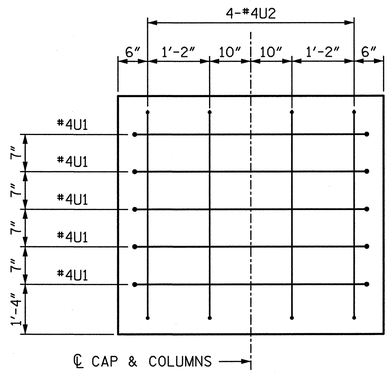

END VIEW B-B

(RIGHT END SHOWN, LEFT END SIMILAR)

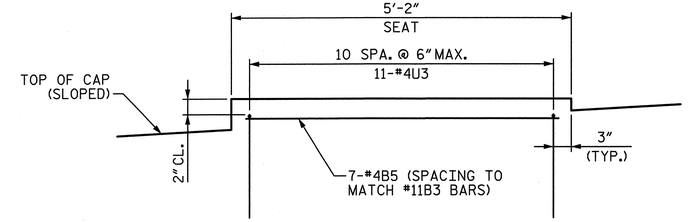

SEAT REINFORCEMENT DETAIL

(TYPICAL AT EACH BEARING SEAT)

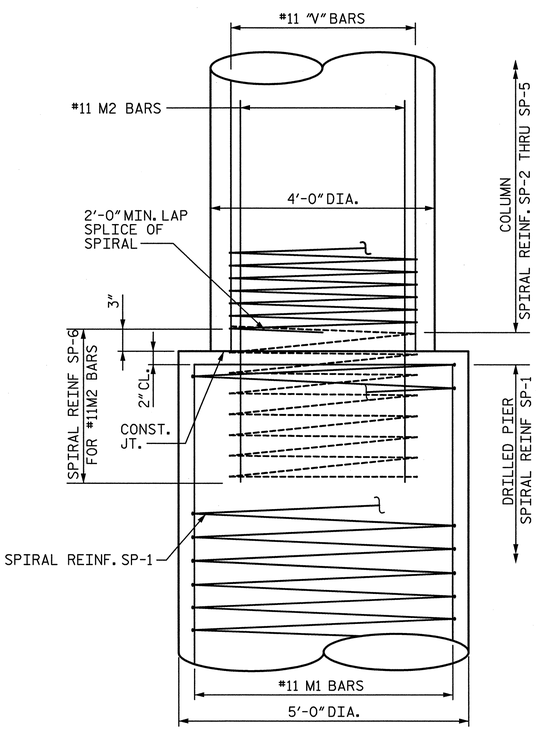

CONSTRUCTION JOINT DETAIL

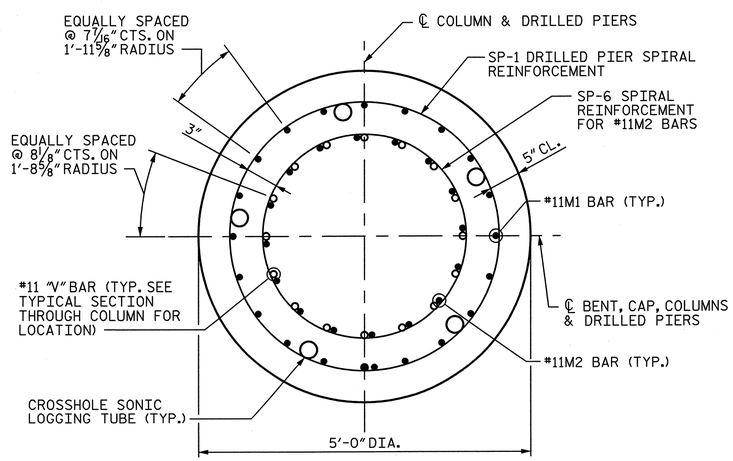

TYPICAL SECTION THROUGH DRILLED PIER

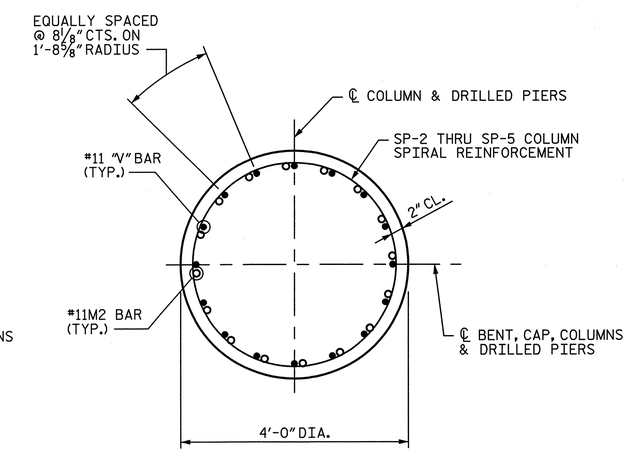

TYPICAL SECTION THROUGH COLUMN

NORTH CAROLINA PROFESSIONAL SEAL 28479 ENGINEER KEVIN G. BAILEY
5-30-13

PROJECT NO. U-2524C
GUILFORD COUNTY
STATION: POT 407+73.35 -L-
= POT 29+32.06 -Y4-
SHEET 2 OF 3

STATE OF NORTH CAROLINA
DEPARTMENT OF TRANSPORTATION
RALEIGH

SUBSTRUCTURE
BENTS 27 & 28
DETAILS

-LEFT LANE-

REVISIONS						SHEET NO.
NO.	BY:	DATE:	NO.	BY:	DATE:	S-236
1			3			TOTAL SHEETS
2			4			836

STV / Ralph Whitehead Associates, Inc.
1000 West Morehead St., Ste. 200
Charlotte, NC 28208
NC License No. F-0991

DRAWN BY : JMP	DATE : 12-12	DESIGN ENGINEER OF RECORD: K. BAILEY	DATE : 5-13
CHECKED BY : JAN	DATE : 12-12		

5/30/2013 5:05:09 PM R:\station\Finals\Bent 27-28- 2 of 3.dgn

TABLE A		
PLAN VIEW INFORMATION		
	BENT 27	BENT 28
"X"	27	28
"Y"	28	29

TABLE B		
PLAN VIEW ANGLES		
	ANGLE "XX"	
GDR.	BENT 27	BENT 28
"X"-1	121°-13′-42″	118°-54′-18″
"X"-2	121°-22′-40″	119°-02′-28″
"X"-3	121°-31′-45″	119°-10′-44″
"X"-4	121°-40′-54″	119°-19′-04″
"X"-5	121°-50′-10″	119°-27′-29″
"X"-6	121°-59′-31″	119°-35′-59″
	ANGLE "YY"	
	BENT 27	BENT 28
"Y"-1	118°-54′-18″	116°-32′-06″
"Y"-2	119°-02′-28″	116°-39′-29″
"Y"-3	119°-10′-43″	116°-46′-57″
"Y"-4	119°-19′-04″	116°-54′-29″
"Y"-5	119°-27′-29″	117°-02′-06″
"Y"-6	119°-35′-59″	117°-09′-47″

TABLE C		
PLAN VIEW DIMENSIONS		
	DIMENSION "AA"	
GDR.	BENT 27	BENT 28
"X"-1	1′-6 3/16″	1′-4 9/16″
"X"-2	1′-6 5/16″	1′-4 11/16″
"X"-3	1′-6 3/8″	1′-4 3/4″
"X"-4	1′-6 1/2″	1′-4 7/8″
"X"-5	1′-6 5/8″	1′-4 15/16″
"X"-6	1′-6 3/4″	1′-5 1/16″
	DIMENSION "BB"	
	BENT 27	BENT 28
"Y"-1	1′-4 9/16″	1′-3″
"Y"-2	1′-4 11/16″	1′-3 1/16″
"Y"-3	1′-4 3/4″	1′-3 1/8″
"Y"-4	1′-4 7/8″	1′-3 1/4″
"Y"-5	1′-4 15/16″	1′-3 5/16″
"Y"-6	1′-5 1/16″	1′-3 3/8″

TABLE D		
ELEVATIONS		
	BENT 27	BENT 28
"A"	778.39	777.94
"B"	778.49	778.01
"C"	778.37	777.88
"D"	777.87	777.38
"E"	777.74	777.25
"F"	777.24	776.74
"G"	777.11	776.62
"H"	776.61	776.11
"I"	776.48	775.99
"J"	775.98	775.48
"K"	775.86	775.36
"L"	775.35	774.85
"M"	775.23	774.73
"N"	774.95	774.40
"O"	773.89	773.44
"P"	770.45	769.90
"Q"	745.10	745.11
"R"	709.85	703.86

TABLE E		
ELEVATION VIEW DIMENSIONS		
	BENT 27	BENT 28
"CC"	28′-6 1/2″	28′-1″
"DD"	27′-6 3/4″	27′-0 3/4″
"EE"	26′-6 7/8″	26′-0 5/8″
"FF"	25′-7 1/8″	25′-0 1/2″
"GG"	35′-3″	41′-3″
"HH"	0.0493	0.0506

BAR TYPES

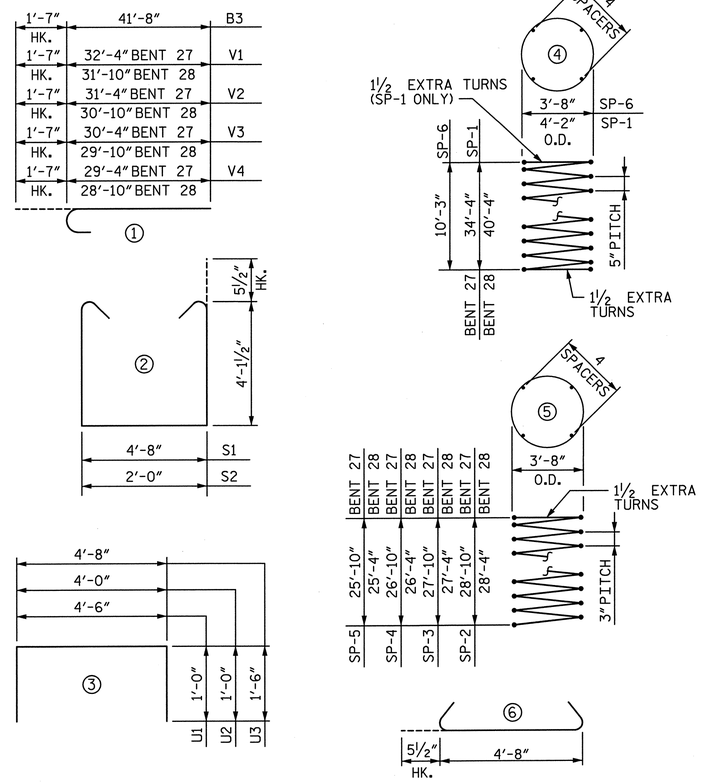

ALL BAR DIMENSIONS ARE OUT TO OUT

BILL OF MATERIAL FOR BENT 27						BILL OF MATERIAL FOR BENT 28					
BAR	NO.	SIZE	TYPE	LENGTH	WEIGHT	BAR	NO.	SIZE	TYPE	LENGTH	WEIGHT
B1	12	#11	STR.	32′-7″	2,077	B1	12	#11	STR.	32′-7″	2,077
B2	12	#11	STR.	46′-10″	2,986	B2	12	#11	STR.	46′-10″	2,986
B3	14	#11	1	43′-3″	3,217	B3	14	#11	1	43′-3″	3,217
B4	20	#5	STR.	36′-4″	758	B4	20	#5	STR.	36′-4″	758
B5	42	#4	STR.	4′-10″	136	B5	42	#4	STR.	4′-10″	136
M1	80	#11	STR.	34′-7″	14,699	M1	80	#11	STR.	43′-7″	18,525
M2	64	#11	STR.	19′-9″	6,716	M2	64	#11	STR.	19′-9″	6,716
S1	77	#5	2	13′-10″	1,111	S1	77	#5	2	13′-10″	1,111
S2	77	#5	2	11′-2″	897	S2	77	#5	2	11′-2″	897
S3	77	#5	6	5′-7″	448	S3	77	#5	6	5′-7″	448
U1	10	#4	3	6′-6″	44	U1	10	#4	3	6′-6″	44
U2	8	#4	3	6′-0″	33	U2	8	#4	3	6′-0″	33
U3	66	#4	3	7′-8″	338	U3	66	#4	3	7′-8″	338
V1	16	#11	1	33′-11″	2,883	V1	16	#11	1	33′-5″	2,841
V2	16	#11	1	32′-11″	2,798	V2	16	#11	1	32′-5″	2,756
V3	16	#11	1	31′-11″	2,713	V3	16	#11	1	31′-5″	2,671
V4	16	#11	1	30′-11″	2,628	V4	16	#11	1	30′-5″	2,586
SP-1	4	✱✱	4	1,104′-8″	4,609	SP-1	4	✱✱	4	1,290′-9″	5,385
SP-2	1	✱	5	1,332′-11″	890	SP-2	1	✱	5	1,310′-1″	875
SP-3	1	✱	5	1,287′-4″	860	SP-3	1	✱	5	1.264′-7″	845
SP-4	1	✱	5	1,241′-9″	829	SP-4	1	✱	5	1,219′-0″	814
SP-5	1	✱	5	1,196′-2″	799	SP-5	1	✱	5	1,173′-5″	784
SP-6	4	✱✱	4	298′-7″	1,246	SP-6	4	✱✱	4	298′-7″	1,246

✱✱ THE SP-1 AND SP-6 SPIRAL REINFORCING STEEL SHALL BE W31 OR D-31 COLD DRAWN WIRE OR #5 PLAIN OR DEFORMED BAR WITH A 5″PITCH.

✱ THE SP-2 THROUGH SP-5 SPIRAL REINFORCING SHALL BE W20 OR D-20 COLD DRAWN WIRE OR #4 PLAIN OR DEFORMED BAR WITH A 3″PITCH.

FOR BENT 28 ONLY, THE CONTRACTOR'S ATTENTION IS CALLED TO THE FACT THAT THE LONGITUDINAL REINFORCEMENT FOR THE DRILLED PIER IS DETAILED WITH 3 FEET OF EXTRA LENGTH.

QUANTITIES			
		BENT 27	BENT 28
REINFORCING STEEL	LBS.	44,482	48,140
SPIRAL REINFORCING STEEL	LBS.	9,233	9,949
CLASS A CONCRETE : POUR 2 - COLUMNS	CU. YDS.	50.4	49.5
POUR 3 - CAP	CU. YDS.	59.9	59.9
TOTAL	CU. YDS.	110.3	109.4
5′-0″Ø DRILLED PIERS IN SOIL	L.F.	97	123
5′-0″Ø DRILLED PIERS NOT IN SOIL	L.F.	44	42
TOTAL 5′-0″Ø DRILLED PIERS	L.F.	141	165
DRILLED PIER CONCRETE : POUR 1	CU. YDS.	102.5	120.0
CSL TUBES	L.F.	735	855

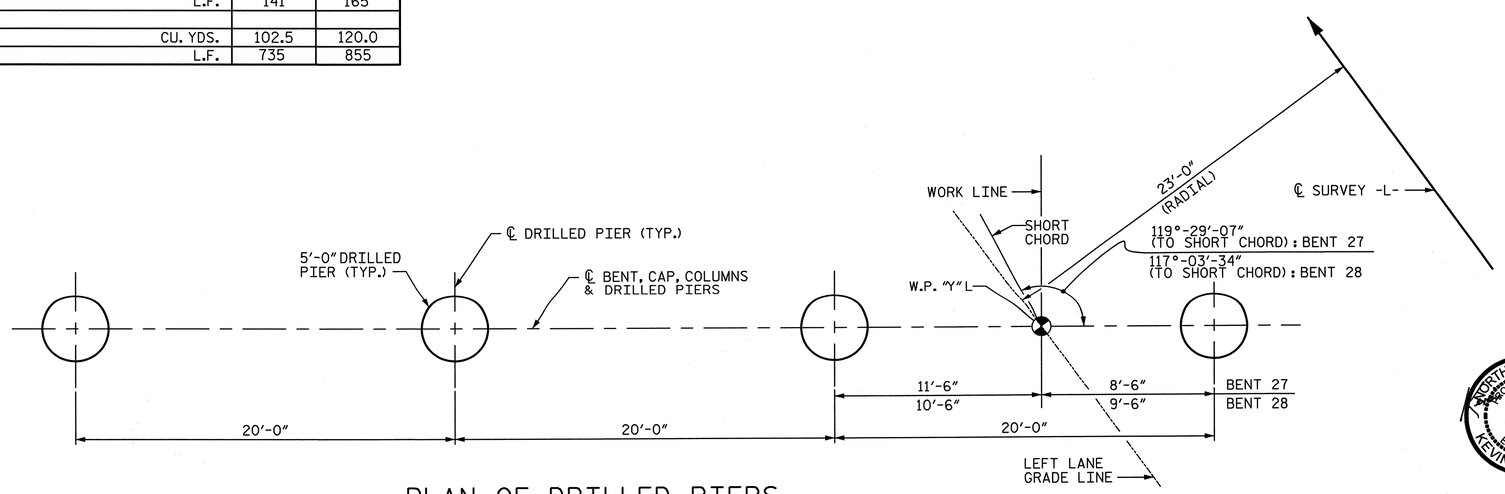

PLAN OF DRILLED PIERS

NOTE:
SEE TABLE A THIS SHEET FOR "Y".

NORTH CAROLINA PROFESSIONAL SEAL 28479 ENGINEER KEVIN G. BAILEY 6-7-13

PROJECT NO. U-2524C
GUILFORD COUNTY
STATION: POT 407+73.35 -L-
= POT 29+32.06 -Y4-
SHEET 3 OF 3

STATE OF NORTH CAROLINA
DEPARTMENT OF TRANSPORTATION
RALEIGH

SUBSTRUCTURE
BENTS 27 & 28
DETAILS & BILL OF MATERIAL

-LEFT LANE-

STV/ Ralph Whitehead Associates, Inc.
1000 West Morehead St., Ste. 200
Charlotte, NC 28208
NC License No. F-0991

REVISIONS						SHEET NO.
NO.	BY:	DATE:	NO.	BY:	DATE:	S-237
1			3			TOTAL SHEETS
2			4			836

DRAWN BY : JMP	DATE : 12-12	DESIGN ENGINEER OF RECORD: K. BAILEY	DATE : 5-13
CHECKED BY : JAN	DATE : 12-12		

6/7/2013 10:34:29 AM R:\ustation\Finals\Bent 27-28- 3 of 3.dgn

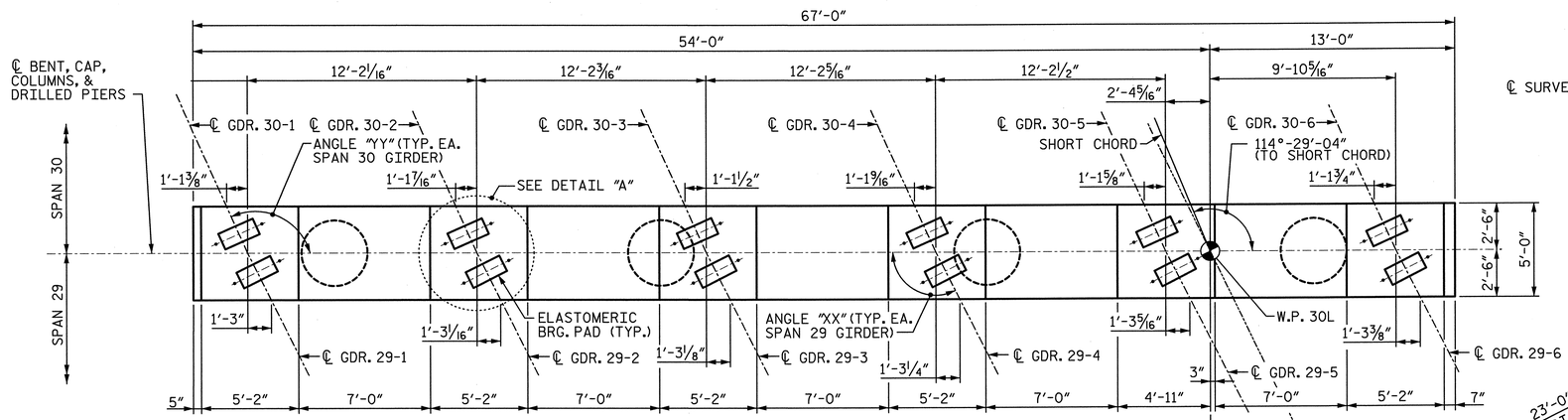

PLAN

NOTE:
INVERT ALTERNATE #5S1, #5S2 AND #5S3 BARS.

NOTE:
SEE TABLE A ON THIS SHEET FOR "XX" AND "YY" ANGLES.

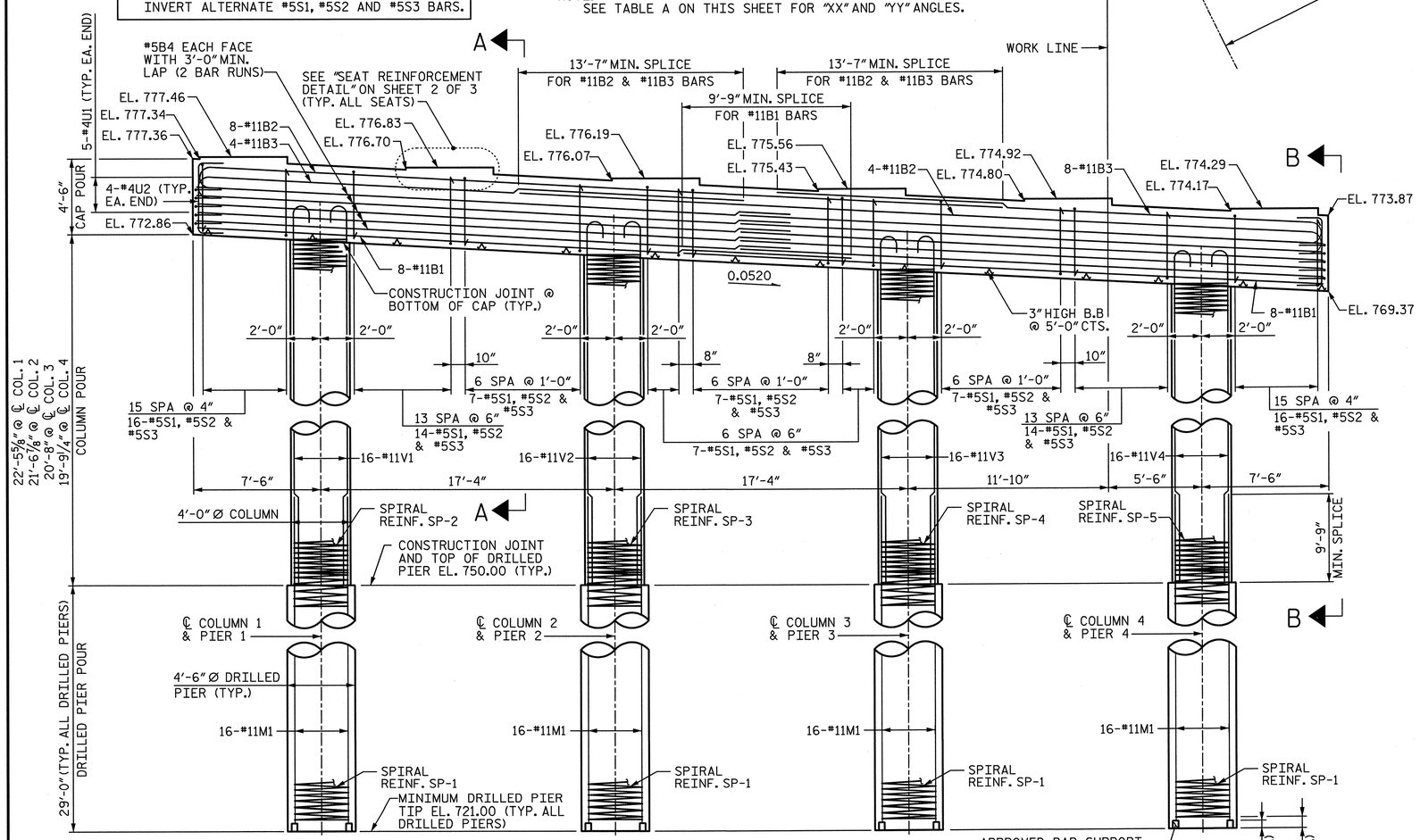

ELEVATION

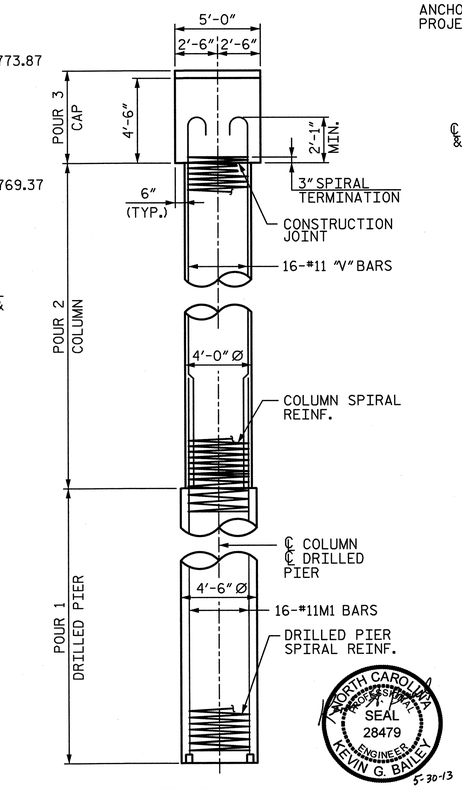

SIDE VIEW

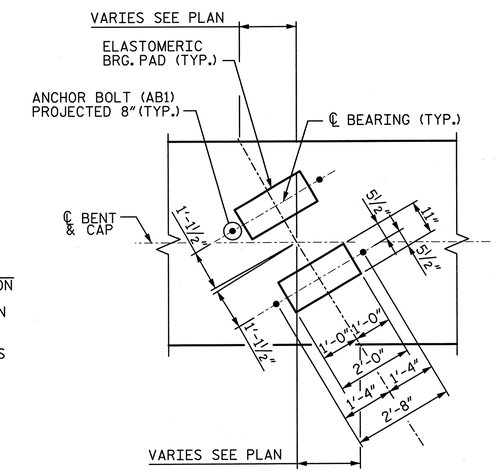

DETAIL "A"

(TYP. AT EACH BRIDGE SEAT)

TABLE A

PLAN VIEW ANGLES

GDR.	ANGLE "XX"
29-1	116°-32'-06"
29-2	116°-39'-30"
29-3	116°-46'-57"
29-4	116°-54'-30"
29-5	117°-02'-06"
29-6	117°-09'-47"
	ANGLE "YY"
30-1	114°-01'-00"
30-2	114°-07'-36"
30-3	114°-14'-15"
30-4	114°-20'-58"
30-5	114°-27'-45"
30-6	114°-34'-36"

NOTES:

1. ALL REINFORCING STEEL IN THE DRILLED PIERS IS INCLUDED IN THE PAY ITEMS FOR "REINFORCING STEEL" AND "SPIRAL COLUMN REINFORCING STEEL".
2. THE LOCATION OF THE CONSTRUCTION JOINT IN THE DRILLED PIERS IS BASED ON AN APPROXIMATE GROUND LINE ELEVATION. IF THE CONSTRUCTION JOINT IS ABOVE THE ACTUAL GROUND ELEVATION, THE CONTRACTOR SHALL PLACE THE CONSTRUCTION JOINT 1 FOOT BELOW THE GROUND LINE.
3. STIRRUPS AND "U BARS" IN CAP MAY BE SHIFTED SLIGHTLY AS NECESSARY TO CLEAR ANCHOR BOLTS.
4. HOOKS ON BARS MAY BE TURNED AS NECESSARY FOR PLACING REINFORCING STEEL.
5. A CONSTRUCTION JOINT AT MID-HEIGHT OF COLUMN IS PERMITTED.
6. FOR "AB1" ANCHOR BOLTS, SEE "ELASTOMERIC BEARING DETAILS" SHEET.
7. SEE "GENERAL DRAWING GENERAL NOTES" SHEET FOR ADDITIONAL NOTES.
8. SEE SHEET 2 OF 3 FOR SECTIONS CALLED OUT ON ELEVATION VIEW.

PROJECT NO. U-2524C
GUILFORD COUNTY
STATION: POT 407+73.35 -L-
= POT 29+32.06 -Y4-

SHEET 1 OF 3

STATE OF NORTH CAROLINA
DEPARTMENT OF TRANSPORTATION
RALEIGH

SUBSTRUCTURE BENT 29 PLAN & ELEVATION

-LEFT LANE-

NORTH CAROLINA PROFESSIONAL SEAL 28479 ENGINEER KEVIN G. BAILEY 5-30-13

STV / Ralph Whitehead Associates, Inc.
1000 West Morehead St., Ste. 200
Charlotte, NC 28208
NC License No. F-0991

REVISIONS								SHEET NO.
NO.	BY:	DATE:	NO.	BY:	DATE:			S-238
1			3					TOTAL SHEETS
2			4					836

DRAWN BY : JMP	DATE : 12-12	DESIGN ENGINEER OF RECORD: K. BAILEY	DATE : 5-13
CHECKED BY : JAN	DATE : 12-12		

5/30/2013 5:05:18 PM R:\structure\Finals\Bent 29 - 1of 3.dgn

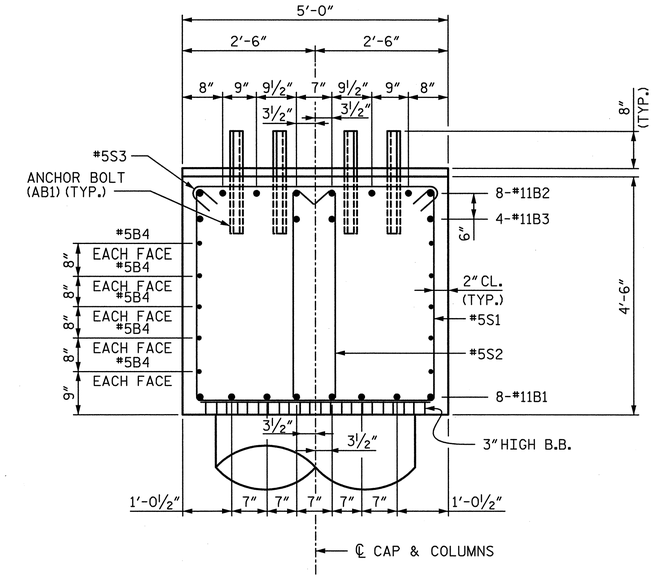

SECTION A-A

NOTE:
INVERT ALTERNATE #5S1, #5S2 AND #5S3 BARS.

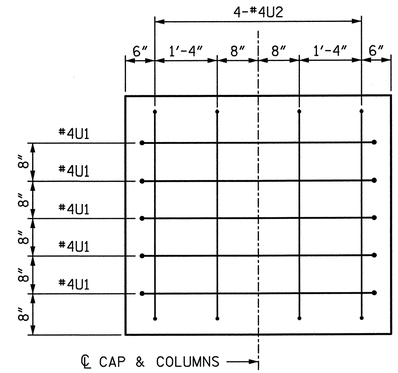

END VIEW B-B

(RIGHT END SHOWN, LEFT END SIMILAR)

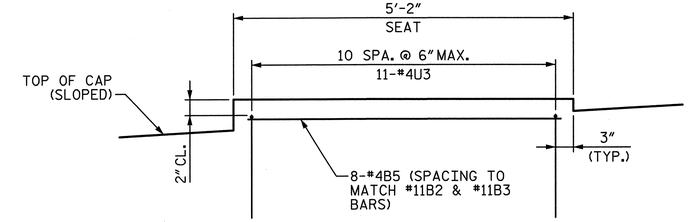

SEAT REINFORCEMENT DETAIL

(TYPICAL AT EACH BEARING SEAT)

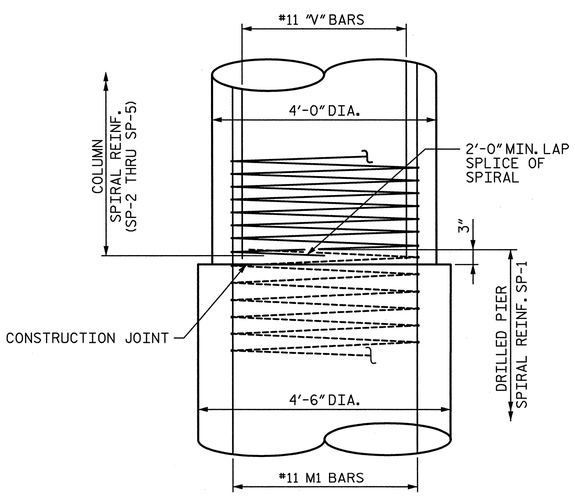

CONSTRUCTION JOINT DETAIL

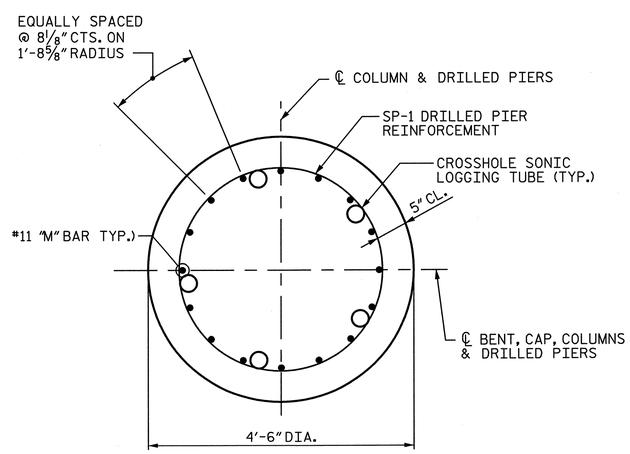

TYPICAL SECTION THROUGH DRILLED PIER

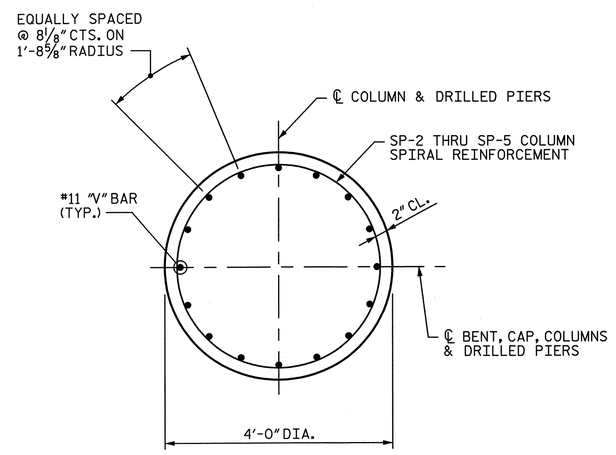

TYPICAL SECTION THROUGH COLUMN

NORTH CAROLINA PROFESSIONAL SEAL 28479 ENGINEER KEVIN G. BAILEY 5-30-13

PROJECT NO. U-2524C
GUILFORD COUNTY
STATION: POT 407+73.35 -L-
= POT 29+32.06 -Y4-

SHEET 2 OF 3

STATE OF NORTH CAROLINA
DEPARTMENT OF TRANSPORTATION
RALEIGH

SUBSTRUCTURE
BENT 29
DETAILS

-LEFT LANE-

REVISIONS						SHEET NO.
NO.	BY:	DATE:	NO.	BY:	DATE:	S-239
1			3			TOTAL SHEETS
2			4			836

STV / Ralph Whitehead Associates, Inc.
1000 West Morehead St., Ste. 200
Charlotte, NC 28208
NC License No. F-0991

DRAWN BY : JMP	DATE : 12-12	DESIGN ENGINEER OF RECORD: K. BAILEY	DATE : 5-13
CHECKED BY : JAN	DATE : 12-12		

5/30/2013 5:05:23 PM R:\ustation\Finals\Bent 29 - 2 of 3.dgn

QUANTITIES

REINFORCING STEEL	LBS.	35,816
SPIRAL REINFORCING STEEL	LBS.	5,977
CLASS A CONCRETE : POUR 2 - COLUMNS	CU. YDS.	39.4
POUR 3 - CAP	CU. YDS.	57.4
TOTAL	CU. YDS.	96.8
4'-6" Ø DRILLED PIERS IN SOIL	L.F.	88
4'-6" Ø DRILLED PIERS NOT IN SOIL	L.F.	28
TOTAL 4'-6" Ø DRILLED PIERS	L.F.	116
DRILLED PIER CONCRETE : POUR 1	CU. YDS.	68.3
CSL TUBES	L.F.	610

BAR TYPES

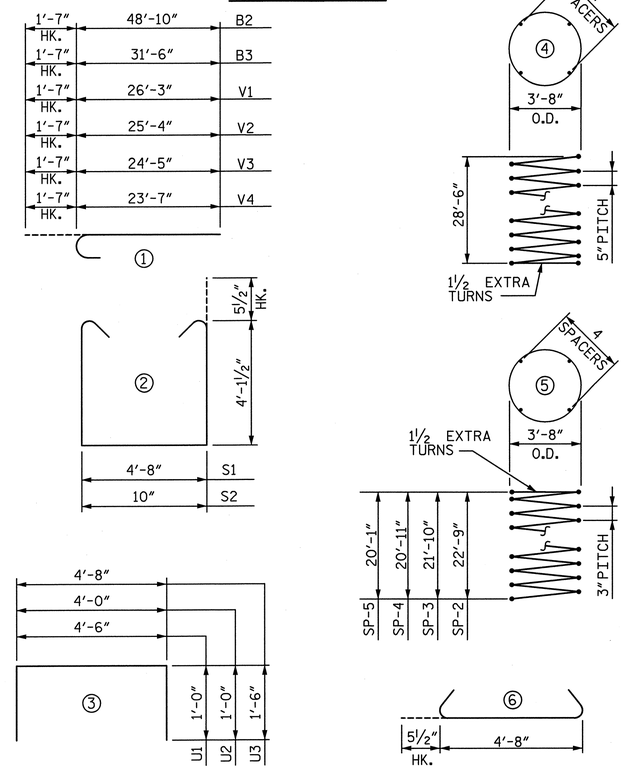

ALL BAR DIMENSIONS ARE OUT TO OUT

BILL OF MATERIAL

BAR	NO.	SIZE	TYPE	LENGTH	WEIGHT
B1	16	#11	STR.	38'-3"	3,252
B2	12	#11	①	50'-5"	3,214
B3	12	#11	①	33'-1"	2,109
B4	20	#5	STR.	34'-10"	727
B5	48	#4	STR.	4'-10"	155
M1	64	#11	STR.	41'-3"	14,026
S1	95	#5	②	13'-10"	1,371
S2	95	#5	②	10'-0"	991
S3	95	#5	⑥	5'-7"	553
U1	10	#4	③	6'-6"	44
U2	8	#4	③	6'-0"	33
U3	66	#4	③	7'-8"	338
V1	16	#11	①	27'-10"	2,366
V2	16	#11	①	26'-11"	2,288
V3	16	#11	①	26'-0"	2,210
V4	16	#11	①	25'-2"	2,139
SP-1	4	✱✱	④	796'-4"	3,322
SP-2	1	✱	⑤	1,055'-8"	705
SP-3	1	✱	⑤	1,013'-11"	677
SP-4	1	✱	⑤	972'-2"	649
SP-5	1	✱	⑤	934'-2"	624

✱✱ THE SP-1 SPIRAL REINFORCING STEEL SHALL BE W31 OR D-31 COLD DRAWN WIRE OR #5 PLAIN OR DEFORMED BAR WITH A 5" PITCH.

✱ THE SP-2 THROUGH SP-5 SPIRAL REINFORCING SHALL BE W20 OR D-20 COLD DRAWN WIRE OR #4 PLAIN OR DEFORMED BAR WITH A 3" PITCH.

THE CONTRACTOR'S ATTENTION IS CALLED TO THE FACT THAT THE LONGITUDINAL REINFORCEMENT FOR THE DRILLED PIERS IS DETAILED WITH 3 FEET OF EXTRA LENGTH.

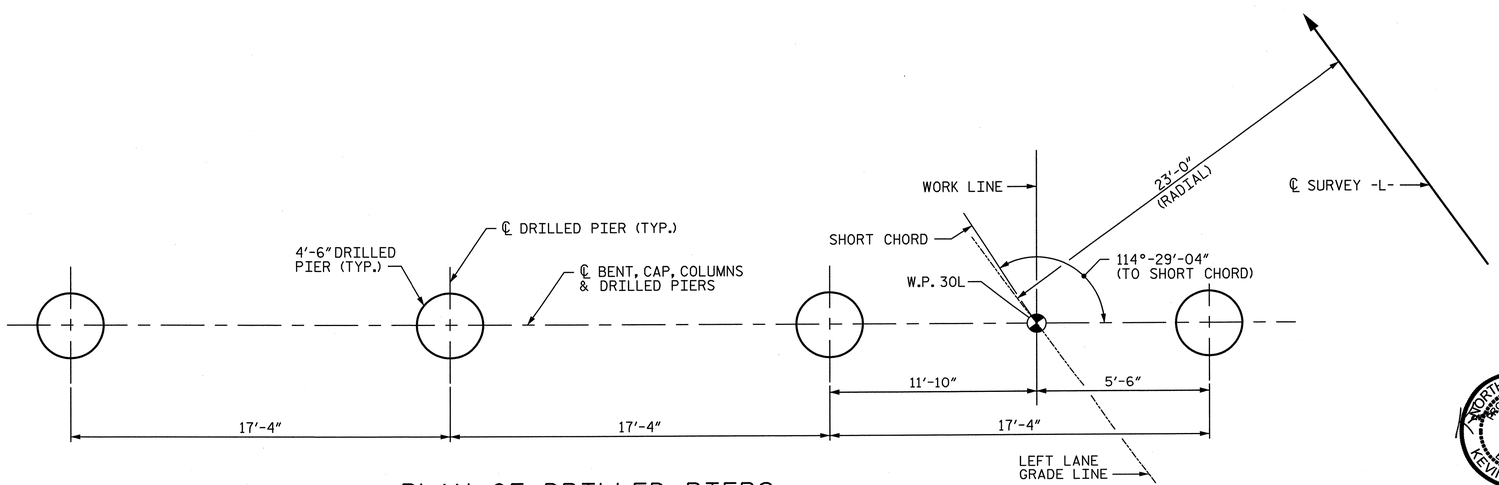

PLAN OF DRILLED PIERS

NORTH CAROLINA PROFESSIONAL SEAL 28479 ENGINEER KEVIN G. BAILEY 5-30-13

PROJECT NO. U-2524C

GUILFORD COUNTY

STATION: POT 407+73.35 -L-
= POT 29+32.06 -Y4-

SHEET 3 OF 3

STATE OF NORTH CAROLINA
DEPARTMENT OF TRANSPORTATION
RALEIGH

SUBSTRUCTURE BENT 29 DETAILS & BILL OF MATERIAL

-LEFT LANE-

DRAWN BY : JMP	DATE : 12-12	DESIGN ENGINEER OF RECORD: K. BAILEY	DATE : 5-13
CHECKED BY : JAN	DATE : 12-12		

STV / Ralph Whitehead Associates, Inc.
1000 West Morehead St., Ste. 200
Charlotte, NC 28208
NC License No. F-0991

REVISIONS								SHEET NO.
NO.	BY:	DATE:	NO.	BY:	DATE:			S-240
1			3					TOTAL SHEETS
2			4					836

5/30/2013 5:05:27 PM R:\ustation\Finals\Bent 29 - 3 of 3.dgn

NOTES:

1. SEE SHEET 3 OF 3 FOR NOTES.
2. SEE SHEET 3 OF 3 FOR SECTIONS A-A AND B-B.

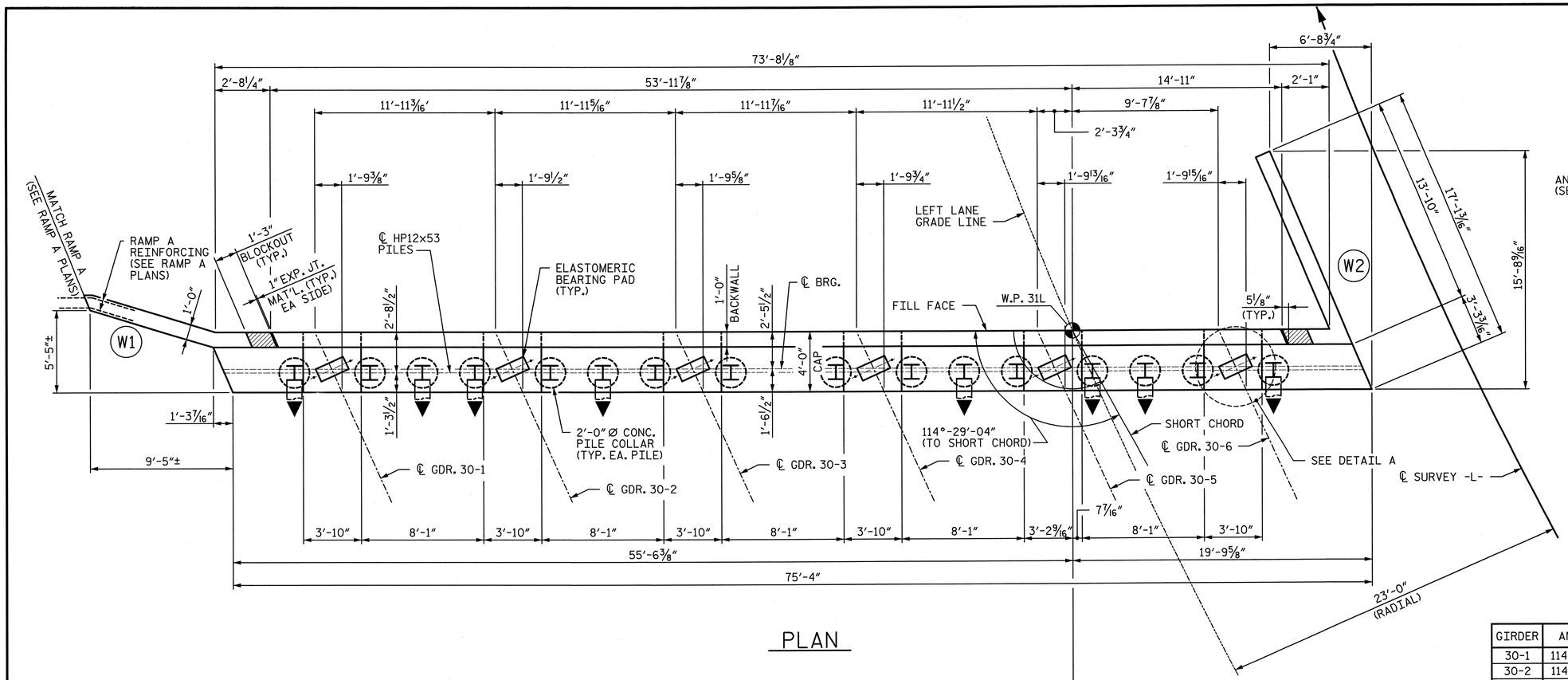

PLAN

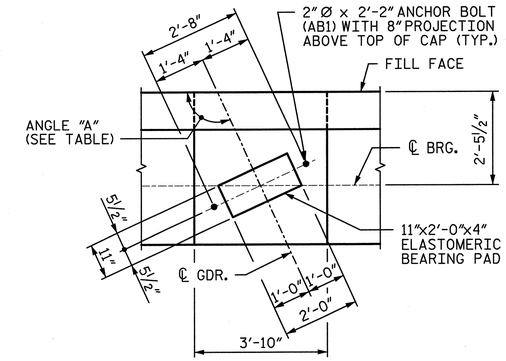

DETAIL A

(ELASTOMERIC BEARING PAD AND ANCHOR BOLT DIMENSIONS ARE TYPICAL FOR EACH GIRDER)

GIRDER	ANGLE "A"
30-1	114°-00'-59"
30-2	114°-07'-35"
30-3	114°-14'-14"
30-4	114°-20'-57"
30-5	114°-27'-45"
30-6	114°-34'-36"

TOP OF PILE ELEVATIONS (BASED ON 2'-0" EMBEDMENT)	
PILE	ELEVATION
P1	774.88
P2	774.61
P3	774.42
P4	774.23
P5	773.96
P6	773.78
P7	773.59
P8	773.32
P9	772.94
P10	772.67
P11	772.49
P12	772.30
P13	772.03
P14	771.84
P15	771.65
P16	771.38

▲ REINFORCING IN WING NOT SHOWN FOR CLARITY. FOR DETAILS, SEE SHEET 2 OF 3.

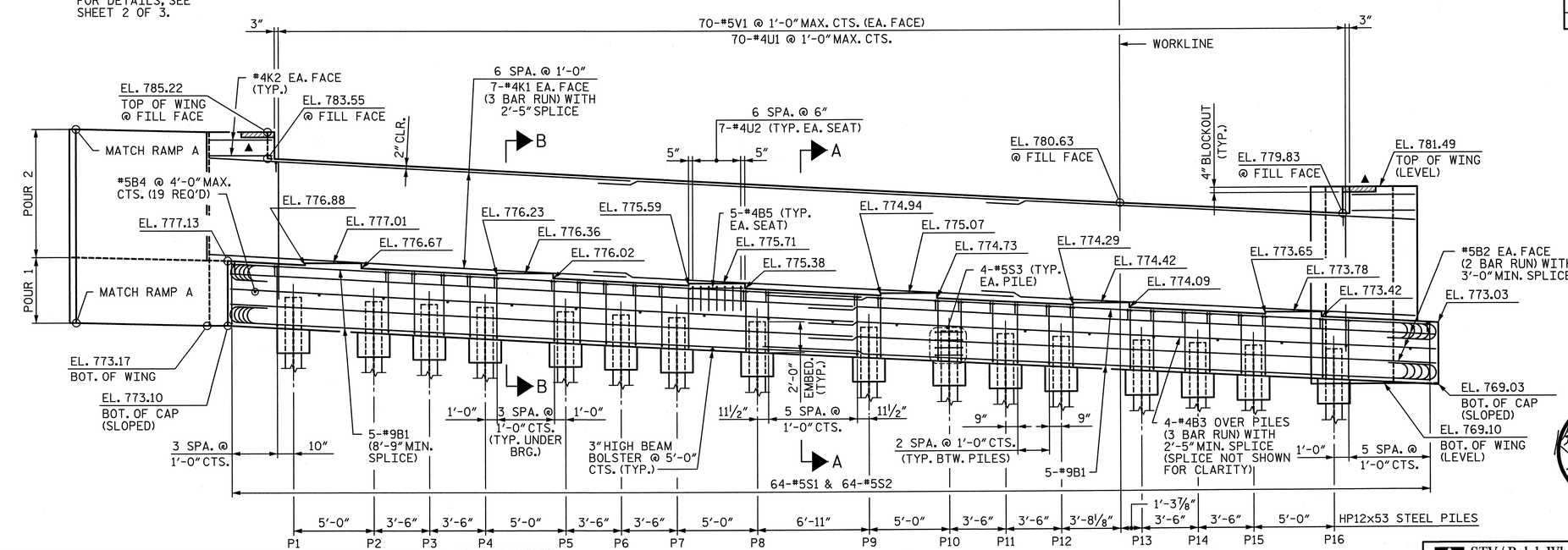

ELEVATION

(LOOKING IN THE DIRECTION OF STATIONING)

PROJECT NO. U-2524C

GUILFORD COUNTY

STATION: POT 407+73.35 -L-
= POT 29+32.06 -Y4-

SHEET 1 OF 3

STATE OF NORTH CAROLINA
DEPARTMENT OF TRANSPORTATION
RALEIGH

NORTH CAROLINA PROFESSIONAL SEAL 28479 ENGINEER KEVIN G. BAILEY 5-30-13

SUBSTRUCTURE END BENT 2

-LEFT LANE-

DRAWN BY : CLG	DATE : 1-13	DESIGN ENGINEER OF RECORD: K. BAILEY	DATE : 5-13
CHECKED BY : KGB	DATE : 2-13		

STV / Ralph Whitehead Associates, Inc.
1000 West Morehead St., Ste. 200
Charlotte, NC 28208
NC License No. F-0991

REVISIONS									
NO.	BY:	DATE:	NO.	BY:	DATE:	SHEET NO. S-241
1			3			TOTAL SHEETS 83
2			4			

5/30/2013 5:05:31 PM R:\ustation\Finals\End Bent 2 - Sheet 1 of 3.dgn

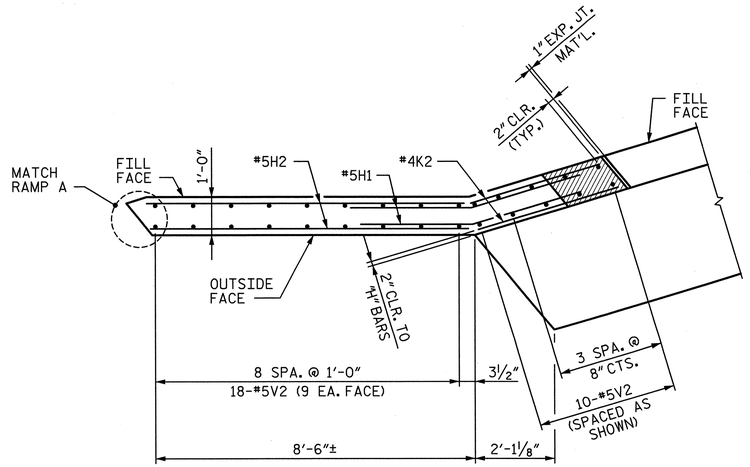

PLAN (W1)

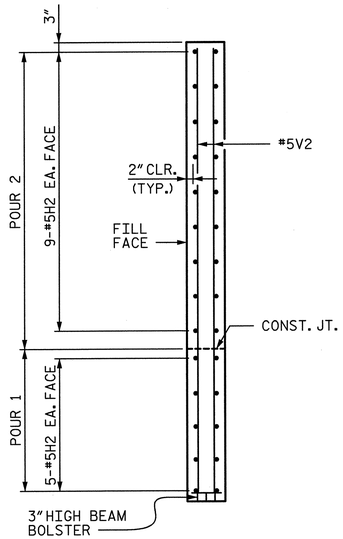

SECTION C-C

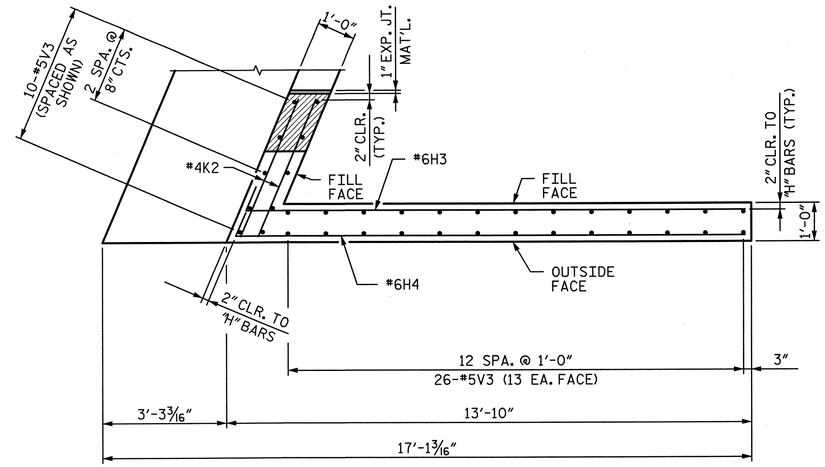

PLAN (W2)

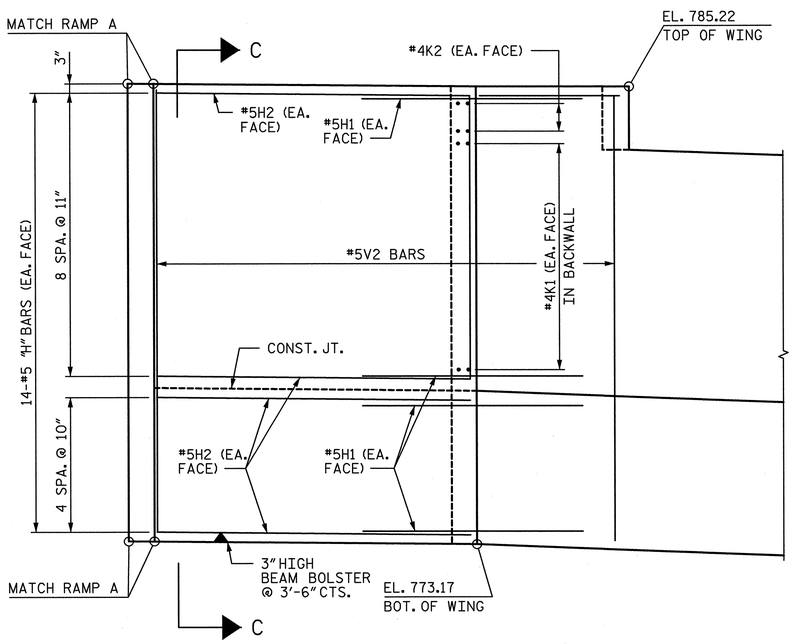

ELEVATION (W1)

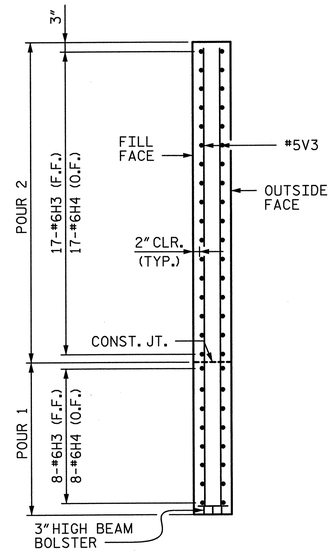

SECTION D-D

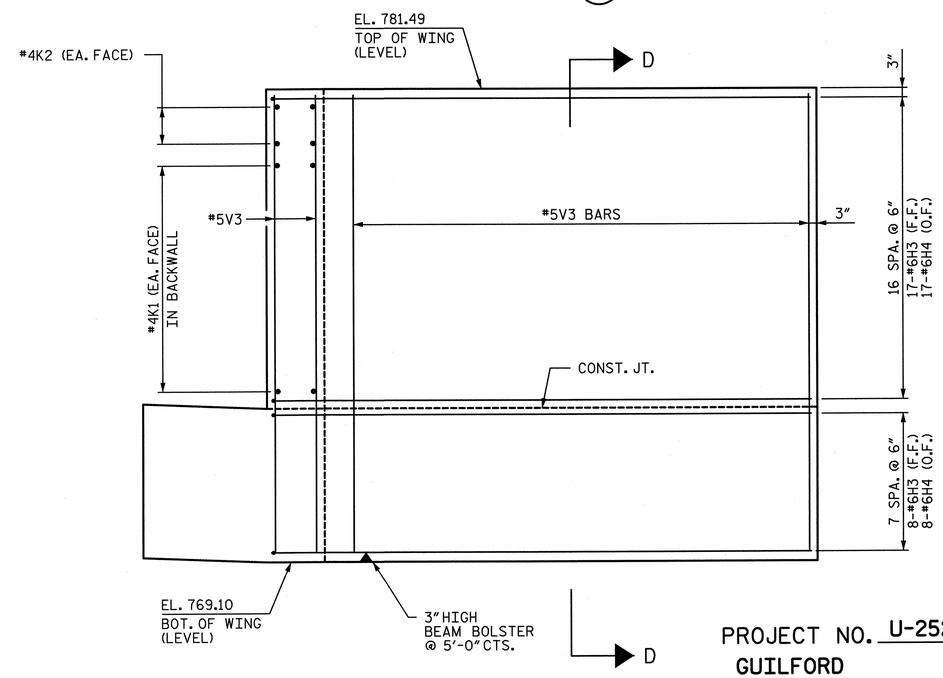

ELEVATION (W2)

PROJECT NO. U-2524C
GUILFORD COUNTY
STATION: POT 407+73.35 -L-
= POT 29+32.06 -Y4-
SHEET 2 OF 3

NORTH CAROLINA PROFESSIONAL ENGINEER SEAL 28479 KEVIN G. BAILEY
5-30-13

STATE OF NORTH CAROLINA
DEPARTMENT OF TRANSPORTATION
RALEIGH

SUBSTRUCTURE
END BENT 2

-LEFT LANE-

REVISIONS								SHEET NO.
NO.	BY:	DATE:	NO.	BY:	DATE:			S-242
1			3					TOTAL SHEETS
2			4					83

STV / Ralph Whitehead Associates, Inc.
1000 West Morehead St. Ste. 200
Charlotte, NC 28208
NC License No. F-0991

DRAWN BY : CLG	DATE : 1-13	DESIGN ENGINEER OF RECORD: K. BAILEY	DATE : 5-13
CHECKED BY : KGB	DATE : 2-13		

5/30/2013 5:05:36 PM R:\ustation\Finals\End Bent 2 - Sheet 2 of 3.dgn

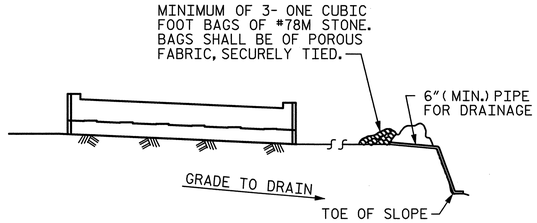

BAGGED STONE AND PIPE SHALL BE PLACED IMMEDIATELY AFTER COMPLETION OF END BENT EXCAVATION. PIPE MAY BE EITHER CONCRETE, CORRUGATED STEEL, CORRUGATED ALUMINUM ALLOY, OR CORRUGATED PLASTIC. PERFORATED PIPE WILL NOT BE ALLOWED.

BAGGED STONE SHALL REMAIN IN PLACE UNTIL THE ENGINEER DIRECTS THAT IT BE REMOVED. THE CONTRACTOR SHALL REMOVE AND DISPOSE OF SILT ACCUMULATIONS AT BAGGED STONE WHEN SO DIRECTED BY THE ENGINEER. BAGS SHALL BE REMOVED AND REPLACED WHENEVER THE ENGINEER DETERMINES THAT THEY HAVE DETERIORATED AND LOST THEIR EFFECTIVENESS.

NO SEPARATE PAYMENT WILL BE MADE FOR THIS WORK AND THE ENTIRE COST OF THIS WORK SHALL BE INCLUDED IN THE UNIT CONTRACT PRICE BID FOR THE SEVERAL PAY ITEMS.

TEMPORARY DRAINAGE AT END BENT

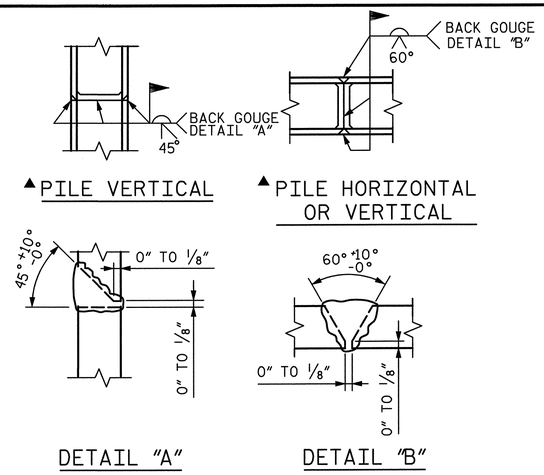

▲ POSITION OF PILE DURING WELDING.

PILE SPLICE DETAILS

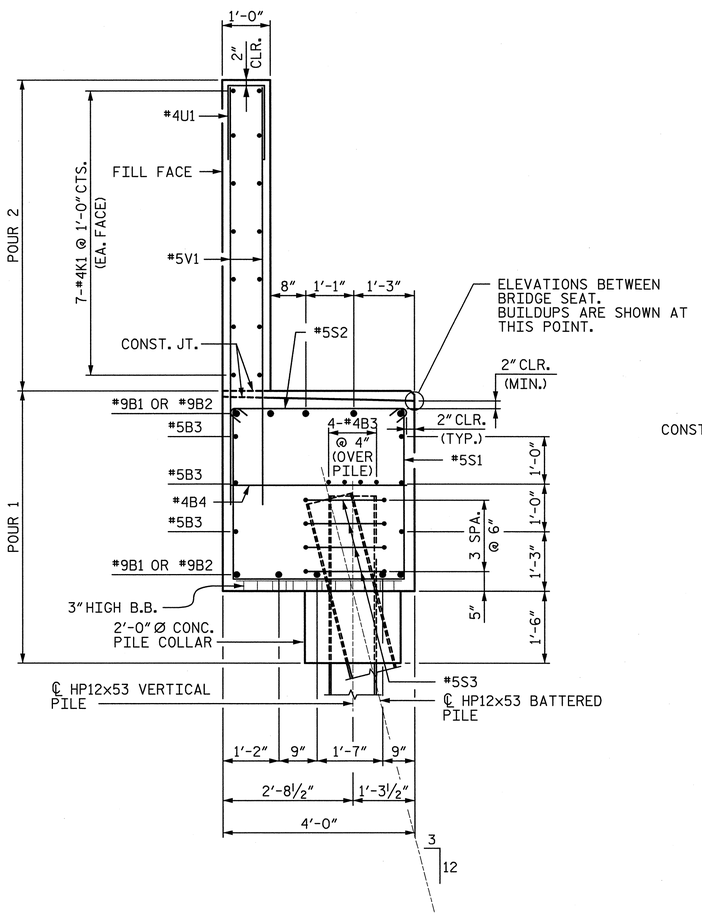

SECTION A-A

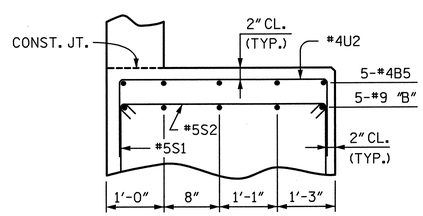

PARTIAL SECTION B

(TYP. AT EACH BRIDGE SEAT)
(ANCHOR BOLTS NOT SHOWN FOR CLARITY)

BAR TYPES

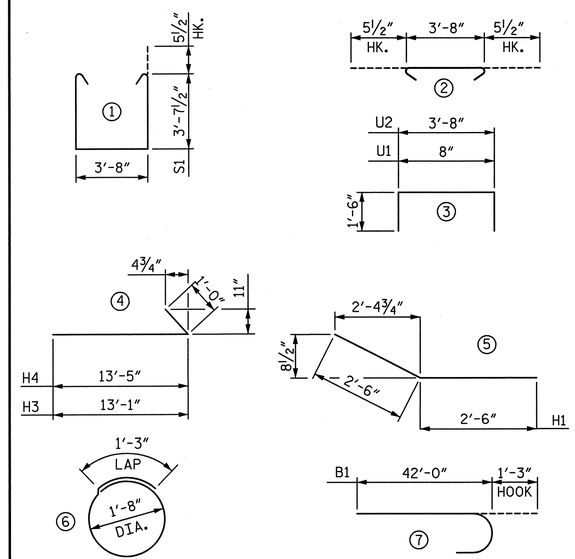

ALL BAR DIMENSIONS ARE OUT TO OUT.

REINFORCING BAR SCHEDULE

BAR	NO.	SIZE	TYPE	LENGTH	WEIGHT
B1	20	#9	7	43'-3"	2,941
B2	12	#5	STR	39'-1"	489
B3	12	#4	STR	26'-8"	214
B4	19	#4	STR	3'-8"	47
B5	30	#4	STR	3'-6"	70
H1	28	#5	5	5'-0"	146
H2	28	#5	STR.	8'-2"	239
H3	25	#6	4	14'-1"	529
H4	25	#6	4	14'-5"	541
K1	42	#4	STR	26'-10"	753
K2	8	#4	STR	3'-10"	20
V1	140	#5	STR	8'-6"	1,241
V2	28	#5	STR	11'-5"	333
V3	36	#5	STR	12'-0"	451
S1	64	#5	1	11'-10"	790
S2	64	#5	2	4'-7"	306
S3	64	#5	6	6'-6"	434
U1	70	#4	3	3'-8"	171
U2	42	#4	3	6'-8"	187

QUANTITIES

		END BENT 2
REINFORCING STEEL	LBS.	9,902
CLASS A CONCRETE		
POUR 1 (CAP, PILE COLLAR & LOWER WING)	: CU. YARDS	51.7
POUR 2 (BACKWALL & UPPER WING)	: CU. YARDS	25.2
TOTAL	: CU. YARDS	76.9
HP12x53 STEEL PILES	NO.	16
HP12x53 STEEL PILES	LIN. FEET	640

NOTES:

STIRRUPS IN CAP MAY BE SHIFTED AS NECESSARY TO CLEAR ANCHOR BOLTS.

BACKWALL SHALL BE PLACED BEFORE APPLYING THE EPOXY PROTECTIVE COATING.

THE TOP SURFACE AREAS OF THE END BENT CAP SHALL BE CURED IN ACCORDANCE WITH THE STANDARD SPECIFICATIONS EXCEPT THAT THE MEMBRANE CURING COMPOUND METHOD SHALL NOT BE USED.

THE TOP SURFACE OF THE CAP EXCEPT THE BRIDGE SEAT BUILDUPS SHALL BE SLOPED TRANSVERSELY FROM THE FILL FACE TO THE OUTSIDE FACE AT THE RATE OF 2%.

"U" BARS IN BRIDGE SEATS MAY BE SHIFTED TO CLEAR OTHER REINFORCING.

DIMENSIONS LOCATING PILES ARE SHOWN TO THE CENTERLINE OF THE PILE AT THE BOTTOM OF THE END BENT CAP.

THE CONCRETE IN THE SHADED AREA OF THE WING SHALL BE POURED AFTER THE BARRIER RAIL ARE CAST IF SLIP FORMING IS USED.

SEE "ELASTOMERIC BEARING DETAILS" SHEET FOR 2" Ø ANCHOR BOLT DETAILS.

INSTALL THE 4" Ø DRAIN PIPE THROUGH THE WING WALL AS REQUIRED FOR THE REINFORCED BRIDGE APPROACH FILL, SEE ROADWAY PLANS. REINFORCING STEEL IN THE WING WALL MAY BE SHIFTED AS NECESSARY TO CLEAR THE DRAIN PIPE.

PROJECT NO. U-2524C
GUILFORD COUNTY
STATION: POT 407+73.35 -L-
= POT 29+32.06 -Y4-
SHEET 3 OF 3

STATE OF NORTH CAROLINA
DEPARTMENT OF TRANSPORTATION
RALEIGH

SUBSTRUCTURE
END BENT 2

-LEFT LANE-

STV / Ralph Whitehead Associates, Inc.
1000 West Morehead St., Ste. 200
Charlotte, NC 28208
NC License No. F-0991

REVISIONS						SHEET NO.
NO.	BY:	DATE:	NO.	BY:	DATE:	S-243
1			3			TOTAL SHEETS
2			4			836

DRAWN BY : CLG	DATE : 1-13	DESIGN ENGINEER OF RECORD: K. BAILEY	DATE : 5-13
CHECKED BY : KGB	DATE : 2-13		

5/30/2013 5:05:40 PM R:\ustation\Finals\End Bent 2 - Sheet 3 of 3.dgn

ESTIMATED QUANTITIES		
BRIDGE @ STA. 407+73.35 -L-	RIP RAP CLASS II (2'-0" THICK)	GEOTEXTILE FOR DRAINAGE
	TONS	SQUARE YARDS
END BENT 1	1260	1390
END BENT 2	240	270

NOTES :

FOR BERM WIDTH DIMENSIONS, SEE GENERAL DRAWING.

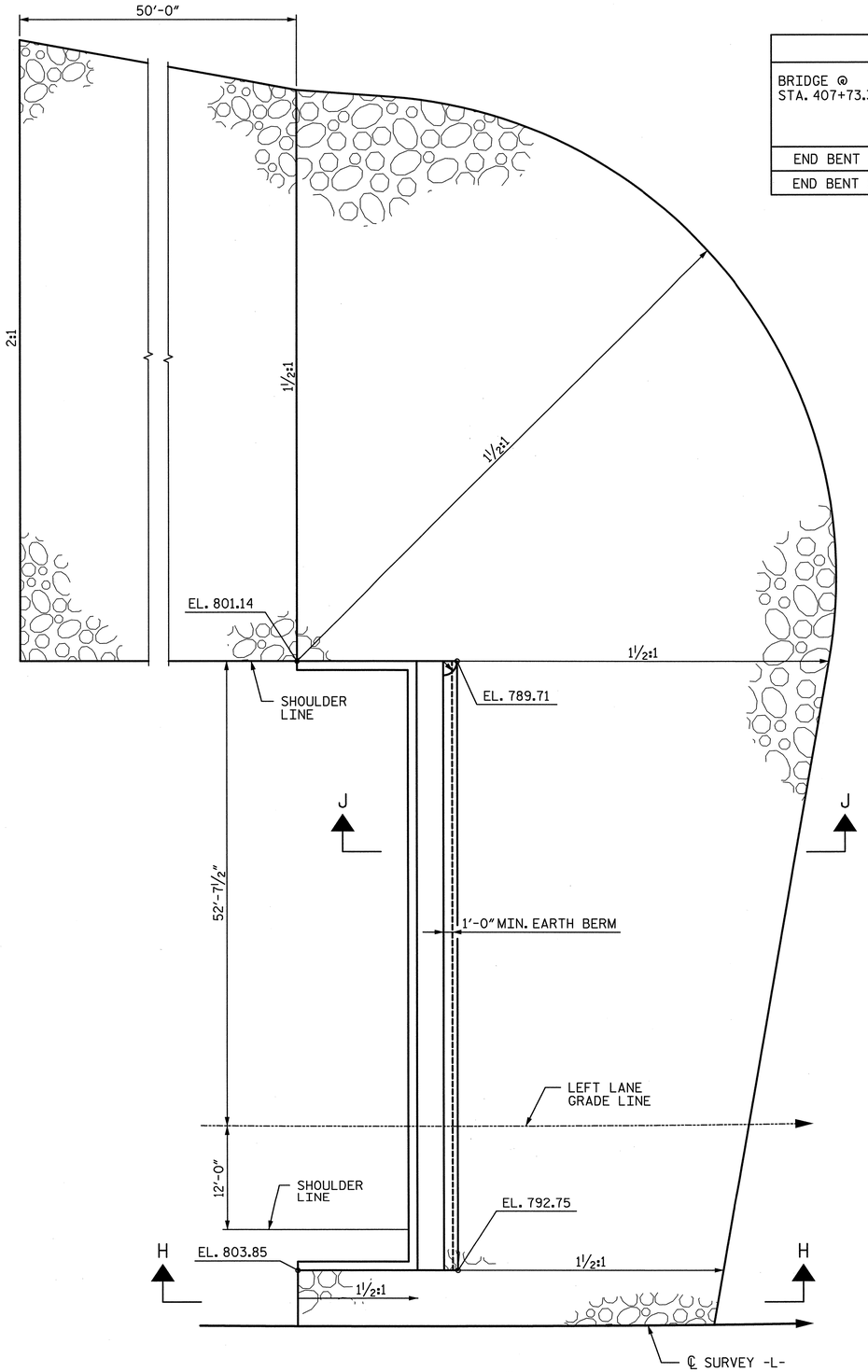

END BENT 1

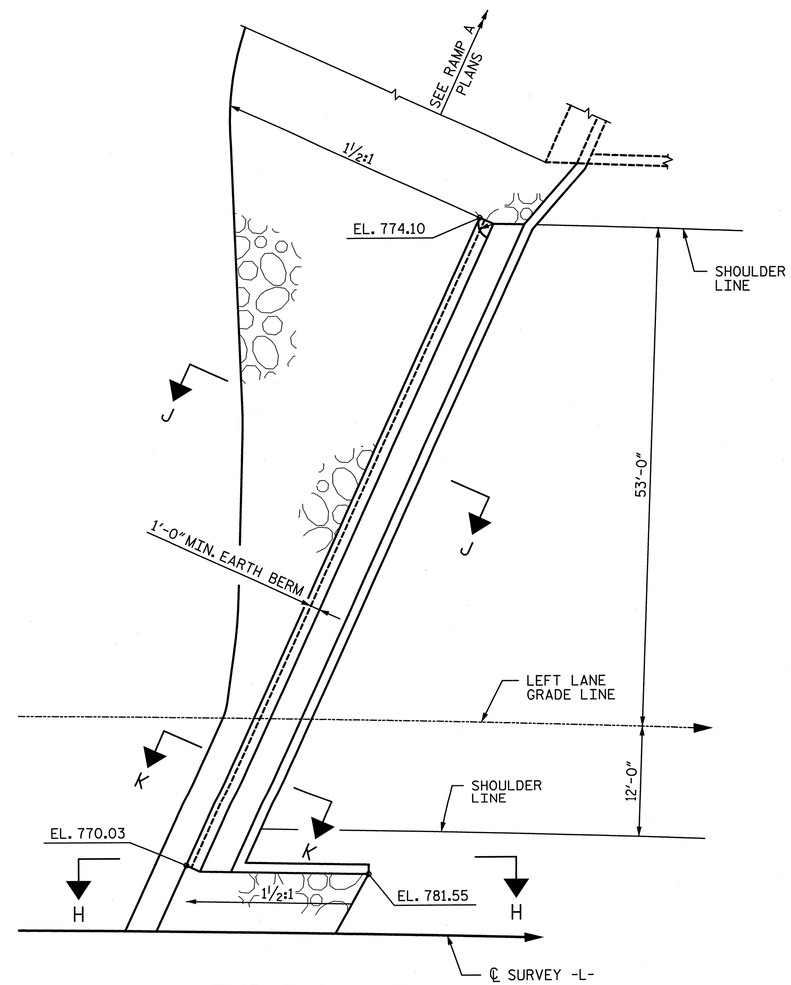

END BENT 2

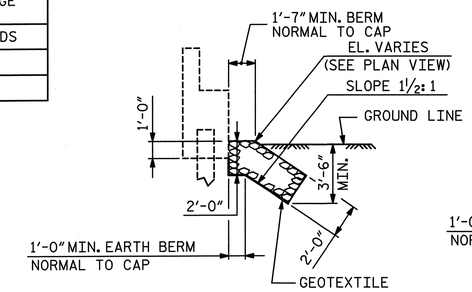

SECTION K-K

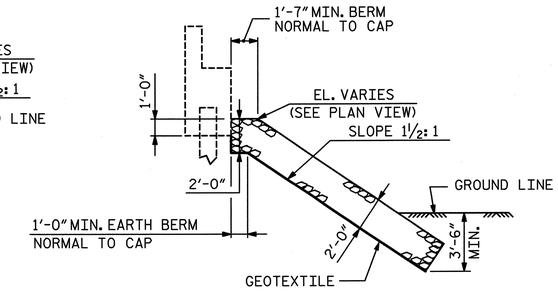

SECTION J-J

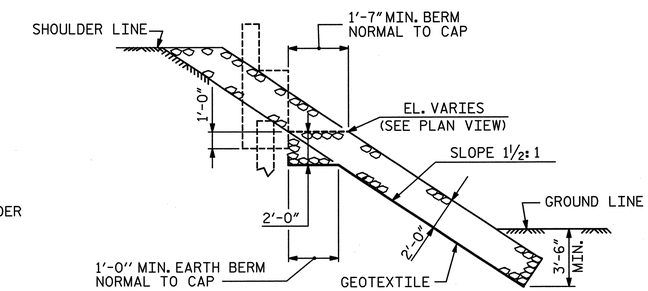

SECTION H-H

PROJECT NO. U-2524C

GUILFORD COUNTY

STATION: POT 407+73.35 -L-
= POT 29+32.06 -Y4-

NORTH CAROLINA PROFESSIONAL SEAL 28479 ENGINEER KEVIN G. BAILEY 6-7-13

STATE OF NORTH CAROLINA
DEPARTMENT OF TRANSPORTATION
RALEIGH

RIP RAP DETAILS

-LEFT LANE-

REVISIONS							SHEET NO.
NO.	BY:	DATE:	NO.	BY:	DATE:		S-244
1			3				TOTAL SHEETS
2			4				83

STV / Ralph Whitehead Associates, Inc.
1000 West Morehead St., Ste. 200
Charlotte, NC 28208
NC License No. F-0991

DRAWN BY : CLG	DATE : 2-13	DESIGN ENGINEER OF RECORD: K. BAILEY	DATE : 5-13
CHECKED BY : TRL	DATE : 2-13		

6/7/2013 10:34:33 AM R:\ustation\Finals\Rip Rap.dgn

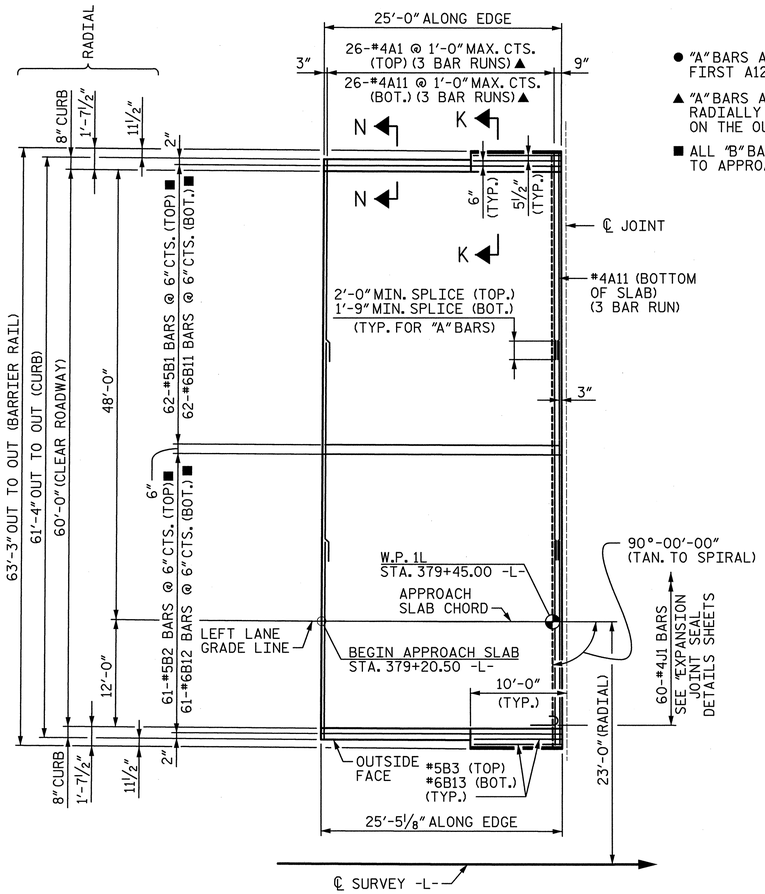

PLAN @ END BENT 1

- ● "A" BARS ARE PARALLEL TO FIRST A125/A225 BAR
- ▲ "A" BARS ARE SPACED RADIALLY AS MEASURED ON THE OUTSIDE FACE.
- ■ ALL "B" BARS ARE PARALLEL TO APPROACH SLAB CHORD.

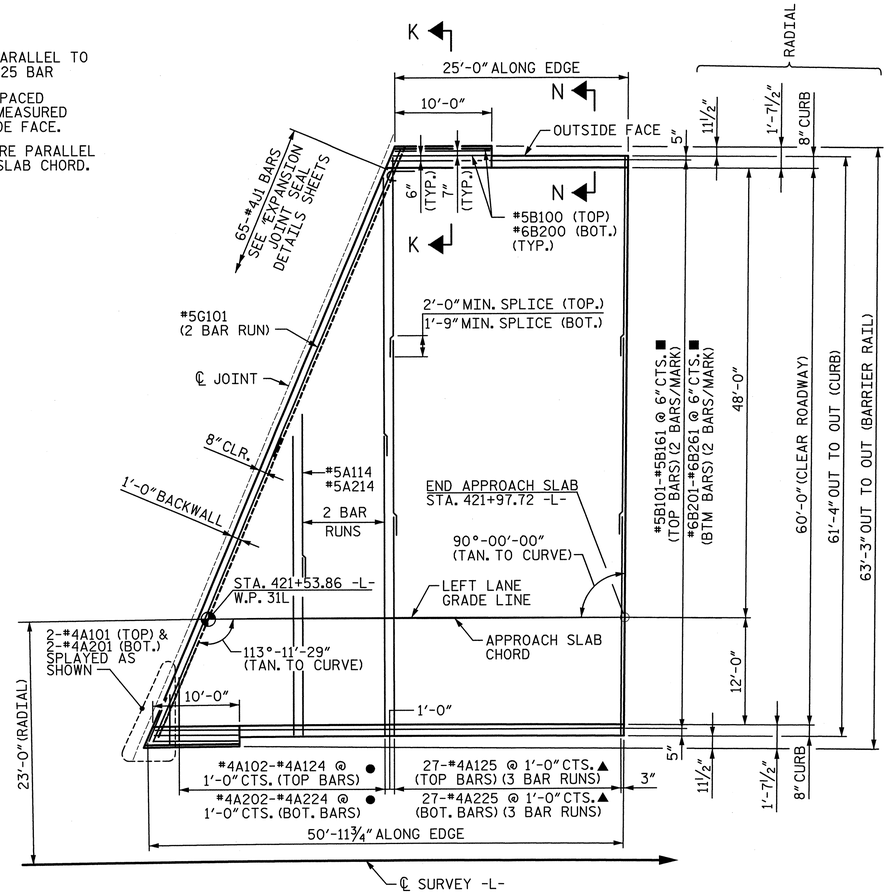

PLAN @ END BENT 2

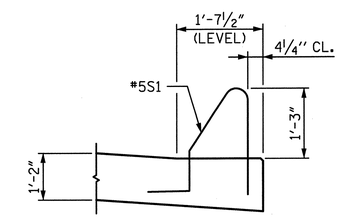

SECTION K-K

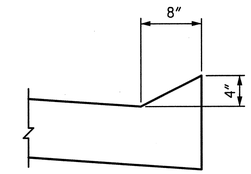

SECTION N-N

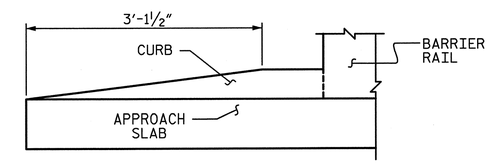

END OF CURB WITHOUT SHOULDER BERM GUTTER

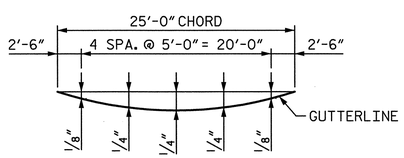

LEFT SIDE - EDGE OF APPROACH SLAB @ END BENT 1

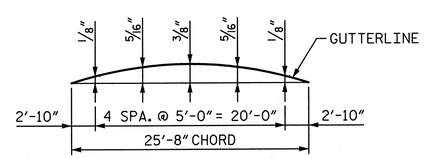

LEFT SIDE - EDGE OF APPROACH SLAB @ END BENT 2

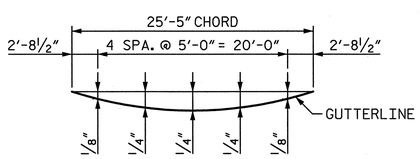

RIGHT SIDE - EDGE OF APPROACH SLAB @ END BENT 1

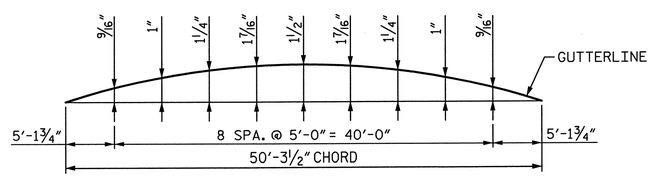

RIGHT SIDE - EDGE OF APPROACH SLAB @ END BENT 2

ARC OFFSETS

PROJECT NO. U-2524C
GUILFORD COUNTY
STATION: POT 407+73.35 -L-
= POT 29+32.06 -Y4-
SHEET 1 OF 3

STATE OF NORTH CAROLINA
DEPARTMENT OF TRANSPORTATION
RALEIGH

BRIDGE APPROACH SLAB DETAILS

-LEFT LANE-

NORTH CAROLINA PROFESSIONAL SEAL 28479 ENGINEER KEVIN G. BAILEY 5-30-13

DRAWN BY : AFM	DATE : 01-13	DESIGN ENGINEER OF RECORD: P. KELLY	DATE : 5-13
CHECKED BY : AC	DATE : 01-13		

STV / Ralph Whitehead Associates, Inc.
1000 West Morehead St., Ste. 200
Charlotte, NC 28208
NC License No. F-0991

REVISIONS

NO.	BY:	DATE:	NO.	BY:	DATE:
1			3		
2			4		

SHEET NO. S-245
TOTAL SHEETS 836

5/30/2013 5:05:49 PM R:\ustation\Finals\App Slab Sheet 1.dgn

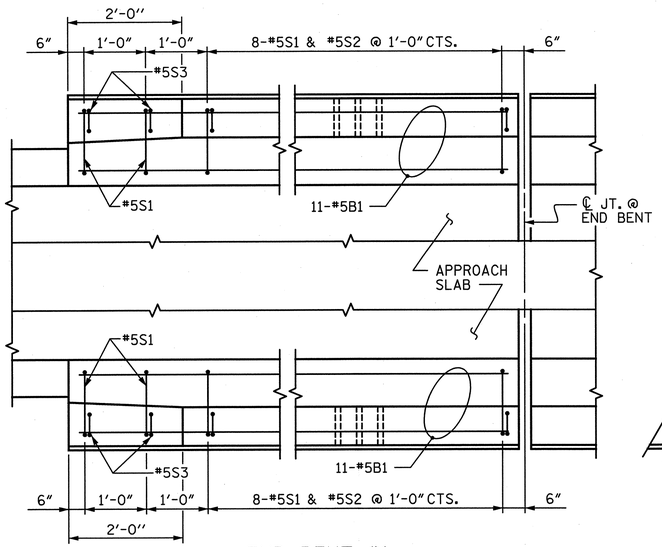

END BENT #1

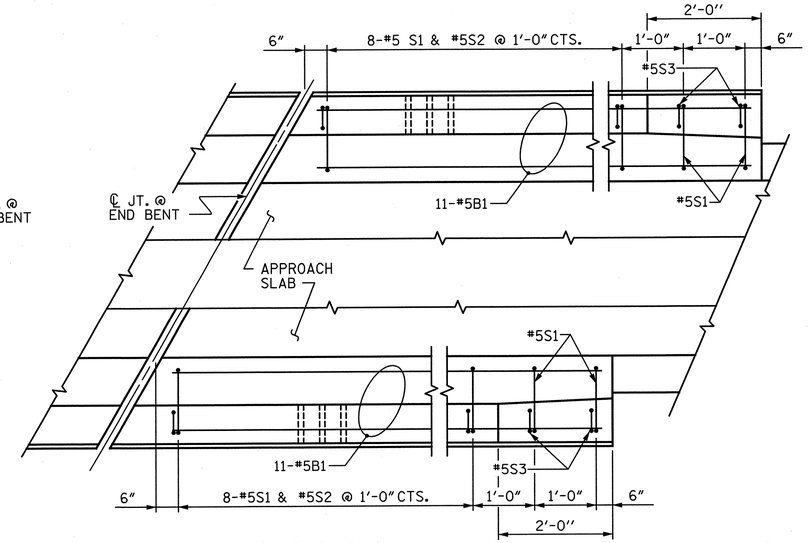

END BENT #2

PLAN OF BARRIER RAIL

NOTES

APPROACH SLAB SHALL NOT BE CONSTRUCTED PRIOR TO COMPLETION OF THE BRIDGE DECK.

FOR REINFORCED BRIDGE APPROACH FILL INCLUDING GEOTEXTILE, IMPERMEABLE GEOMEMBRANE, 4" Ø DRAINAGE PIPE, #78M STONE, AND SELECT MATERIAL, SEE ROADWAY PLANS.

AREA BETWEEN THE WINGWALL AND APPROACH SLAB SHALL BE GRADED TO DRAIN THE WATER AWAY FROM THE FILL FACE OF THE BRIDGE AND SHALL BE PAVED. SEE ROADWAY PLANS.

FOR EXPANSION JOINT SEALS, SEE SPECIAL PROVISIONS.

THE COST OF BARRIER RAIL ON THE APPROACH SLAB SHALL BE INCLUDED IN THE LINEAR FOOT CONTRACT BID PRICE FOR "CONCRETE BARRIER RAIL".

THE BARRIER RAIL IN EACH APPROACH SLAB SHALL NOT BE CAST UNTIL ALL APPROACH SLAB CONCRETE HAS BEEN CAST AND HAS REACHED A MINIMUM COMPRESSIVE STRENGTH OF 3,000 PSI.

ALL REINFORCING IN THE BARRIER RAIL SHALL BE EPOXY COATED.

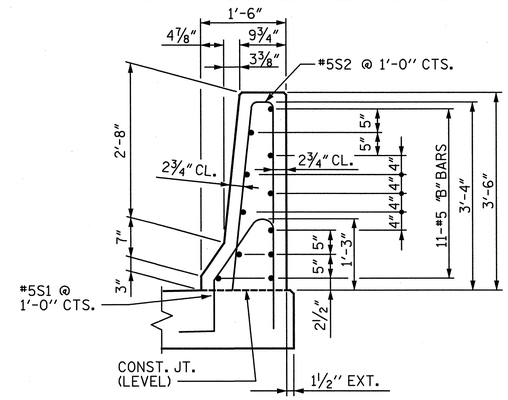

SECTION THRU RAIL

BAR TYPES

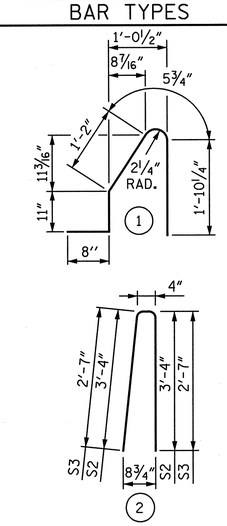

ALL BAR DIMENSIONS ARE OUT TO OUT

BILL OF MATERIAL

BARRIER RAIL ONLY

BAR	NO.	SIZE	TYPE	LENGTH	WEIGHT
✳B1	44	#5	STR	9'-7"	440
✳S1	40	#5	1	5'-1"	212
✳S2	32	#5	2	7'-0"	234
✳S3	8	#5	2	5'-6"	46
✳EPOXY COATED REINFORCING STEEL				LBS.	932
CLASS AA CONCRETE				CU. YDS.	5.8
CONCRETE BARRIER RAIL				40.7 LIN. FT.	

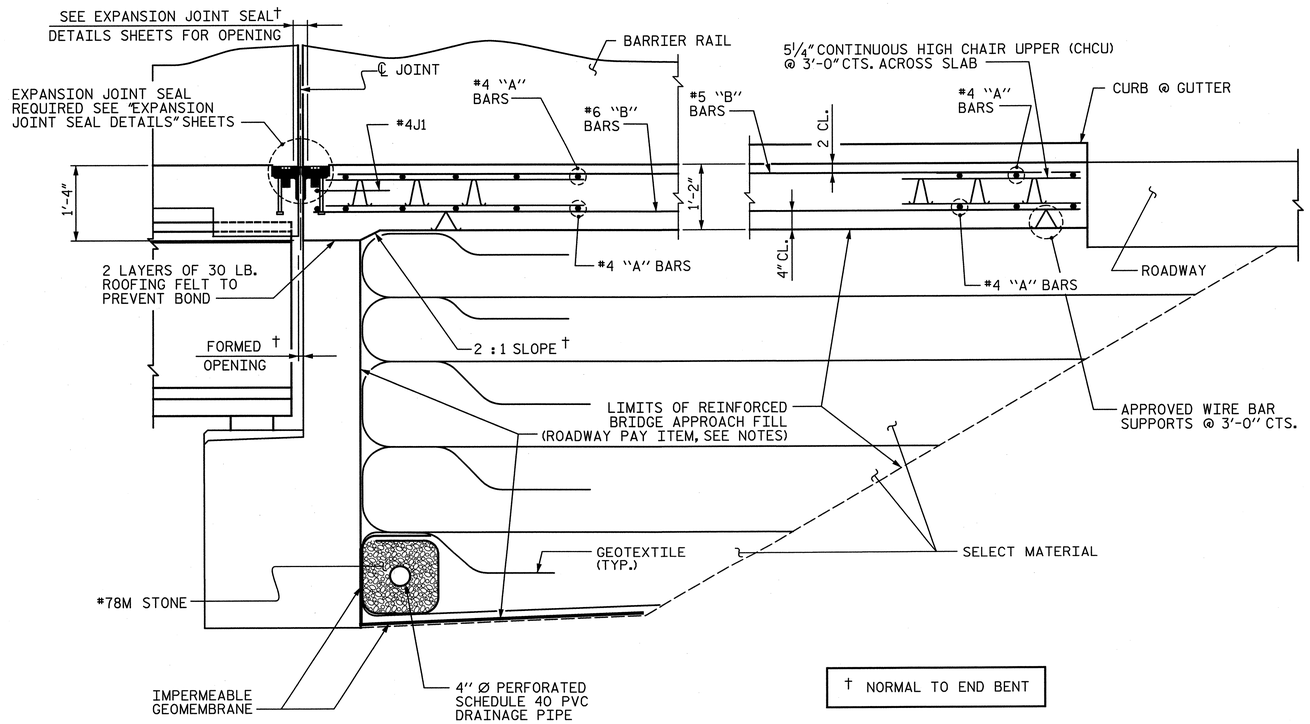

† NORMAL TO END BENT

SECTION THRU SLAB

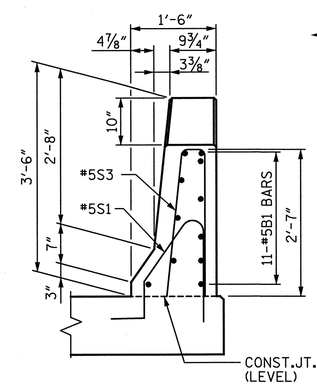

END VIEW

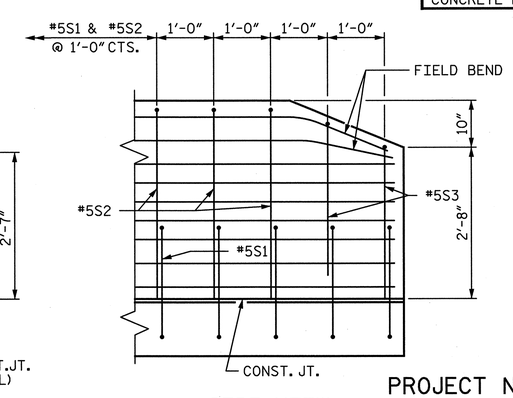

SIDE VIEW

END OF RAIL DETAILS

PROJECT NO. U-2524C

GUILFORD COUNTY

STATION: POT 407+73.35 -L-
= POT 29+32.06 -Y4-

SHEET 2 OF 3

STATE OF NORTH CAROLINA
DEPARTMENT OF TRANSPORTATION
RALEIGH

BRIDGE APPROACH SLAB DETAILS

-LEFT LANE-

NORTH CAROLINA PROFESSIONAL SEAL 28479 ENGINEER KEVIN G. BAILEY 5-30-13

STV / Ralph Whitehead Associates, Inc.
1000 West Morehead St., Ste. 200
Charlotte, NC 28208
NC License No. F-0991

REVISIONS

NO.	BY:	DATE:	NO.	BY:	DATE:
1			3		
2			4		

SHEET NO. S-246

TOTAL SHEETS

DRAWN BY : AFM DATE : 01-13
CHECKED BY : AC DATE : 01-13

DESIGN ENGINEER OF RECORD: P. KELLY DATE : 5-13

5/30/2013 9:25:58 PM R:\ustation\Finals\App Slab Sheet 2.dgn

BILL OF MATERIAL

APPROACH SLAB AT E.B. 1

BAR	NO.	SIZE	TYPE	LENGTH	WEIGHT
✳A1	78	#4	STR	22'-8"	1,181
A11	81	#4	STR	22'-6"	1,217
✳B1	62	#5	STR	24'-2"	1,564
✳B2	61	#5	STR	24'-5"	1,553
✳B3	4	#5	STR	9'-7"	40
B11	62	#6	STR	24'-8"	2,299
B12	61	#6	STR	24'-11"	2,283
B13	4	#6	STR	9'-7"	58
✳J1	60	#4	①	1'-5"	57

REINFORCING STEEL ✳✳	LBS.	5,857
✳EPOXY COATED REINFORCING STEEL ✳✳	LBS.	4,395
CLASS AA CONCRETE ◆ ✳✳	C.Y.	68.2

BAR TYPE

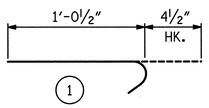

ALL BAR DIMENSIONS ARE OUT TO OUT

✳✳ QUANTITIES FOR BARRIER RAIL ARE NOT INCLUDED. SEE SHEET 2 OF 3.

THE QUANTITY OF #4 J1 BARS ON THE BILL OF MATERIAL IS BASED ON 1'-0" CENTERS. J1 BARS SHALL BE PLACED AT EACH VERTICAL STUD ANCHOR BOLT. IN THE EVENT THAT THE NUMBER OF VERTICAL STUD ANCHORS EXCEEDS THE NUMBER OF J1 BARS SPECIFIED, ADDITIONAL J1 BARS WILL NOT BE REQUIRED.

◆ INCLUDES 2 CURBS

BILL OF MATERIAL

APPROACH SLAB AT END BENT 2

BAR	NO.	SIZE	TYPE	LENGTH	WEIGHT
✳A101	2	#4	STR	2'-9"	4
✳A102	1	#4	STR	4'-0"	3
✳A103	1	#4	STR	6'-5"	4
✳A104	1	#4	STR	8'-9"	6
✳A105	1	#4	STR	11'-2"	7
✳A106	1	#4	STR	13'-6"	9
✳A107	1	#4	STR	15'-11"	11
✳A108	1	#4	STR	18'-3"	12
✳A109	1	#4	STR	20'-8"	14
✳A110	1	#4	STR	23'-0"	15
✳A111	1	#4	STR	24'-5"	16
✳A112	1	#4	STR	26'-10"	18
✳A113	1	#4	STR	29'-3"	20
✳A114	2	#4	STR	16'-10"	22
✳A115	2	#4	STR	18'-0"	24
✳A116	2	#4	STR	19'-3"	26
✳A117	2	#4	STR	20'-5"	27
✳A118	2	#4	STR	21'-7"	29
✳A119	2	#4	STR	22'-10"	31
✳A120	2	#4	STR	24'-0"	32
✳A121	2	#4	STR	25'-2"	34
✳A122	2	#4	STR	26'-5"	35
✳A123	2	#4	STR	27'-7"	37
✳A124	2	#4	STR	28'-9"	38
✳A125	81	#4	STR	22'-3"	1,204
A201	2	#4	STR	3'-3"	4
A202	1	#4	STR	4'-10"	3
A203	1	#4	STR	7'-3"	5
A204	1	#4	STR	9'-7"	6
A205	1	#4	STR	12'-0"	8
A206	1	#4	STR	14'-4"	10
A207	1	#4	STR	16'-9"	11
A208	1	#4	STR	19'-1"	13
A209	1	#4	STR	21'-6"	14
A210	1	#4	STR	23'-10"	16
A211	1	#4	STR	25'-3"	17
A212	1	#4	STR	27'-8"	18
A213	1	#4	STR	30'-0"	20
A214	2	#4	STR	17'-1"	23
A215	2	#4	STR	18'-3"	24
A216	2	#4	STR	19'-6"	26
A217	2	#4	STR	20'-8"	28
A218	2	#4	STR	21'-10"	29
A219	2	#4	STR	23'-1"	31
A220	2	#4	STR	24'-3"	32
A221	2	#4	STR	25'-5"	34
A222	2	#4	STR	26'-8"	36
A223	2	#4	STR	27'-10"	37
A224	2	#4	STR	29'-0"	39
A225	81	#4	STR	22'-0"	1,190
✳B100	4	#5	STR	9'-7"	40
✳B101	2	#5	STR	24'-4"	51
✳B102	2	#5	STR	24'-9"	52
✳B103	2	#5	STR	25'-2"	52
✳B104	2	#5	STR	25'-7"	53
✳B105	2	#5	STR	26'-0"	54
✳B106	2	#5	STR	26'-4"	55
✳B107	2	#5	STR	26'-9"	56
✳B108	2	#5	STR	27'-2"	57
✳B109	2	#5	STR	27'-7"	58
✳B110	2	#5	STR	28'-0"	58
✳B111	2	#5	STR	28'-5"	59
✳B112	2	#5	STR	28'-10"	60
✳B113	2	#5	STR	29'-3"	61

BAR	NO.	SIZE	TYPE	LENGTH	WEIGHT
✳B114	2	#5	STR	29'-8"	62
✳B115	2	#5	STR	30'-1"	63
✳B116	2	#5	STR	30'-6"	64
✳B117	2	#5	STR	30'-11"	64
✳B118	2	#5	STR	31'-3"	65
✳B119	2	#5	STR	31'-8"	66
✳B120	2	#5	STR	32'-1"	67
✳B121	2	#5	STR	32'-6"	68
✳B122	2	#5	STR	32'-11"	69
✳B123	2	#5	STR	33'-4"	70
✳B124	2	#5	STR	33'-9"	70
✳B125	2	#5	STR	34'-2"	71
✳B126	2	#5	STR	34'-7"	72
✳B127	2	#5	STR	35'-0"	73
✳B128	2	#5	STR	35'-5"	74
✳B129	2	#5	STR	35'-10"	75
✳B130	2	#5	STR	36'-2"	75
✳B131	2	#5	STR	36'-7"	76
✳B132	2	#5	STR	37'-0"	77
✳B133	2	#5	STR	37'-5"	78
✳B134	2	#5	STR	37'-10"	79
✳B135	2	#5	STR	38'-3"	80
✳B136	2	#5	STR	38'-8"	81
✳B137	2	#5	STR	39'-1"	82
✳B138	2	#5	STR	39'-6"	82
✳B139	2	#5	STR	39'-11"	83
✳B140	2	#5	STR	40'-4"	84
✳B141	2	#5	STR	40'-8"	85
✳B142	2	#5	STR	41'-1"	86
✳B143	2	#5	STR	41'-6"	87
✳B144	2	#5	STR	41'-11"	87
✳B145	2	#5	STR	42'-4"	88
✳B146	2	#5	STR	42'-9"	89
✳B147	2	#5	STR	43'-2"	90
✳B148	2	#5	STR	43'-7"	91
✳B149	2	#5	STR	44'-0"	92
✳B150	2	#5	STR	44'-5"	93
✳B151	2	#5	STR	44'-10"	94
✳B152	2	#5	STR	45'-3"	94
✳B153	2	#5	STR	45'-7"	95
✳B154	2	#5	STR	46'-0"	96
✳B155	2	#5	STR	46'-5"	97
✳B156	2	#5	STR	46'-10"	98
✳B157	2	#5	STR	47'-3"	99
✳B158	2	#5	STR	47'-8"	99
✳B159	2	#5	STR	48'-1"	100
✳B160	2	#5	STR	48'-6"	101
✳B161	2	#5	STR	48'-11"	102
B200	4	#6	STR	9'-7"	58
B201	2	#6	STR	24'-10"	75
B202	2	#6	STR	25'-3"	76
B203	2	#6	STR	25'-8"	77
B204	2	#6	STR	26'-1"	78
B205	2	#6	STR	26'-6"	80
B206	2	#6	STR	26'-10"	81
B207	2	#6	STR	27'-3"	82
B208	2	#6	STR	27'-8"	83
B209	2	#6	STR	28'-1"	84
B210	2	#6	STR	28'-6"	86
B211	2	#6	STR	28'-11"	87
B212	2	#6	STR	29'-4"	88
B213	2	#6	STR	29'-9"	89
B214	2	#6	STR	30'-2"	91
B215	2	#6	STR	30'-7"	92
B216	2	#6	STR	31'-0"	93

BAR	NO.	SIZE	TYPE	LENGTH	WEIGHT
B217	2	#6	STR	31'-5"	94
B218	2	#6	STR	31'-9"	95
B219	2	#6	STR	32'-2"	97
B220	2	#6	STR	32'-7"	98
B221	2	#6	STR	33'-0"	99
B222	2	#6	STR	33'-5"	100
B223	2	#6	STR	33'-10"	102
B224	2	#6	STR	34'-3"	103
B225	2	#6	STR	34'-8"	104
B226	2	#6	STR	35'-1"	105
B227	2	#6	STR	35'-6"	107
B228	2	#6	STR	35'-11"	108
B229	2	#6	STR	36'-4"	109
B230	2	#6	STR	36'-8"	110
B231	2	#6	STR	37'-1"	111
B232	2	#6	STR	37'-6"	113
B233	2	#6	STR	37'-11"	114
B234	2	#6	STR	38'-4"	115
B235	2	#6	STR	38'-9"	116
B236	2	#6	STR	39'-2"	118
B237	2	#6	STR	39'-7"	119
B238	2	#6	STR	40'-0"	120
B239	2	#6	STR	40'-5"	121
B240	2	#6	STR	40'-10"	123
B241	2	#6	STR	41'-2"	124
B242	2	#6	STR	41'-7"	125
B243	2	#6	STR	42'-0"	126
B244	2	#6	STR	42'-5"	127
B245	2	#6	STR	42'-10"	129
B246	2	#6	STR	43'-3"	130
B247	2	#6	STR	43'-8"	131
B248	2	#6	STR	44'-1"	132
B249	2	#6	STR	44'-6"	134
B250	2	#6	STR	44'-11"	135
B251	2	#6	STR	45'-4"	136
B252	2	#6	STR	45'-9"	137
B253	2	#6	STR	46'-1"	138
B254	2	#6	STR	46'-6"	140
B255	2	#6	STR	46'-11"	141
B256	2	#6	STR	47'-4"	142
B257	2	#6	STR	47'-9"	143
B258	2	#6	STR	48'-2"	145
B259	2	#6	STR	48'-7"	146
B260	2	#6	STR	49'-0"	147
B261	2	#6	STR	49'-5"	148
✳G101	2	#4	STR	34'-2"	46
✳J1	65	#4	①	1'-5"	62

REINFORCING STEEL ✳✳	LBS.	8,531
✳EPOXY COATED REINFORCING STEEL ✳✳	LBS.	6,485
CLASS AA CONCRETE ◆ ✳✳	C.Y.	102.2

◆ INCLUDES 2 CURBS

✳✳ QUANTITIES FOR BARRIER RAIL ARE NOT INCLUDED. SEE SHEET 2 OF 3.

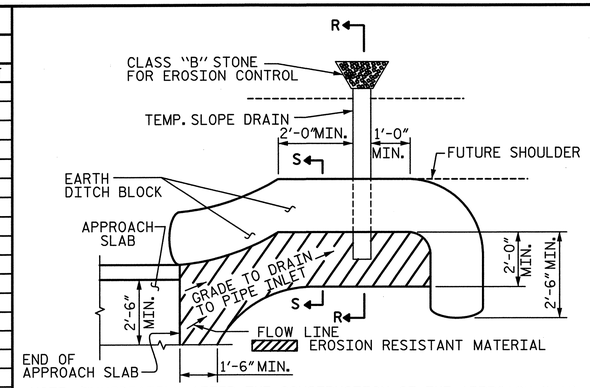

NOTE: IMMEDIATELY AFTER THE CONSTRUCTION OF THE APPROACH SLAB, THE CONTRACTOR SHALL PROVIDE TEMPORARY BERM AND SLOPE DRAIN. CONTRACTOR SHALL GRADE TO PIPE INLET AND PROVIDE EROSION RESISTANT MATERIAL AS SHOWN. THE EROSION RESISTANT MATERIAL SHALL BE EITHER 1) ASPHALT PLANT MIX, TYPE 1 OR TYPE 2, MIN. 2" DEPTH, 2) EROSION CONTROL MAT, OR 3) CONCRETE, AS DIRECTED BY THE ENGINEER. THE SLOPE DRAIN SHALL CONSIST OF A NON-PERFORATED TEMPORARY DRAINAGE PIPE, 12 INCHES IN DIAMETER.

PLAN VIEW

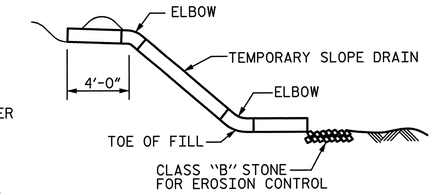

SECTION R-R

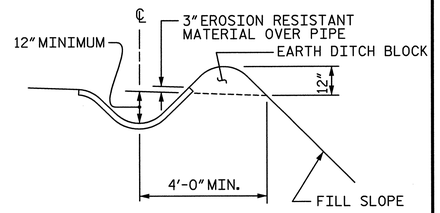

SECTION S-S

TEMPORARY BERM AND SLOPE DRAIN DETAILS

(TO BE USED WHEN SHOULDER BERM GUTTER IS REQUIRED)

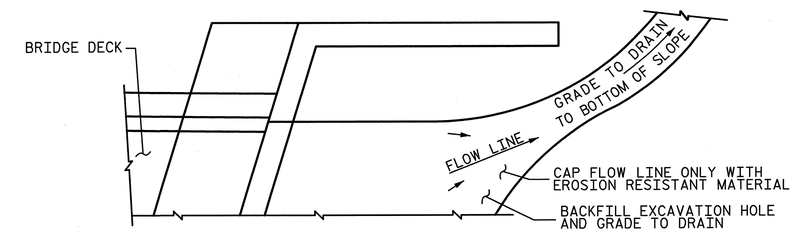

NOTE: IF THE APPROACH SLAB IS NOT CONSTRUCTED IMMEDIATELY AFTER THE BACKFILLING OF THE END BENT EXCAVATION, GRADE TO DRAIN TO THE BOTTOM OF THE SLOPE AND PROVIDE EROSION RESISTANT MATERIAL, SUCH AS FIBERGLASS ROVING OR AS DIRECTED BY THE ENGINEER TO PREVENT SOIL EROSION AND TO PROTECT THE AREA ADJACENT TO THE STRUCTURE. THE CONTRACTOR WILL BE REQUIRED TO REMOVE THESE MATERIALS PRIOR TO CONSTRUCTION OF THE APPROACH SLAB.

TEMPORARY DRAINAGE DETAIL

PROJECT NO. U-2524C

GUILFORD COUNTY

STATION: POT 407+73.35 -L-
= POT 29+32.06 -Y4-

SHEET 3 OF 3

NORTH CAROLINA PROFESSIONAL SEAL 28479 ENGINEER KEVIN G. BAILEY 6-7-13

STATE OF NORTH CAROLINA
DEPARTMENT OF TRANSPORTATION
RALEIGH

BRIDGE APPROACH SLAB DETAILS

-LEFT LANE-

STV / Ralph Whitehead Associates, Inc.
1000 West Morehead St., Ste. 200
Charlotte, NC 28208
NC License No. F-0991

REVISIONS							SHEET NO.
NO.	BY:	DATE:	NO.	BY:	DATE:		S-247
1			3				TOTAL SHEETS
2			4				836

DRAWN BY : AFM DATE : 01-13
CHECKED BY : AC DATE : 01-13

DESIGN ENGINEER OF RECORD: P. KELLY DATE : 5-13

6/7/2013 10:34:37 AM R:\ustation\Finals\App Slab Sheet 3.dgn